MIAMI-DADE COUNTY
PRODUCT CONTROL SECTION
11805 SW 26 Street, Room 208
Miami, Florida 33175-2474
T (786) 315-2590 F (786) 315-2599
www.miamidade.gov/economy

DEPARTMENT OF REGULATORY AND ECONOMIC RESOURCES (RER)
BOARD AND CODE ADMINISTRATION DIVISION

NOTICE OF ACCEPTANCE (NOA)

SIW Solution, LLC
975 S. Congress Ave. # 102
Delray Beach, Florida 33445

SCOPE:

This NOA is being issued under the applicable rules and regulations governing the use of construction materials. The documentation submitted has been reviewed and accepted by Miami-Dade County RER -Product Control Section to be used in Miami Dade County and other areas where allowed by the Authority Having Jurisdiction (AHJ).

This NOA shall not be valid after the expiration date stated below. The Miami-Dade County Product Control Section (In Miami Dade County) and/or the AHJ (in areas other than Miami Dade County) reserve the right to have this product or material tested for quality assurance purposes. If this product or material fails to perform in the accepted manner, the manufacturer will incur the expense of such testing and the AHJ may immediately revoke, modify, or suspend the use of such product or material within their jurisdiction. RER reserves the right to revoke this acceptance, if it is determined by Miami-Dade County Product Control Section that this product or material fails to meet the requirements of the applicable building code.

This product is approved as described herein, and has been designed to comply with the Florida Building Code, including the High Velocity Hurricane Zone.

DESCRIPTION: Series "600 KM-11 " Aluminum Sliding Glass Doors (Dry glazed) w/ Reinforcements

APPROVAL DOCUMENT: Drawing No. **W13-56 Rev E**, titled "Series 600KM -11 Alum Sliding Glass Door (LMI)", sheets 1, 1.1, 2 to 11, 11.1, 12 thru 16 of 16, dated 10-23-13 and last revised on Jan 08, 2019, prepared by Al-Farooq Corp., signed and sealed by Javad Ahmad, P. E., bearing the Miami-Dade County Product Control Revision stamp with the Notice of Acceptance number and expiration date by the Miami-Dade County Product Control Section.

MISSILE IMPACT RATING: Large and Small Missile Impact

Limitations:

1. See Design Pressure ratings in sheets **1, 2 & 3**, applicable to both Pocketed & Non-pocket Doors. Pockets are under separate approval, to be reviewed by appropriate Building official.
2. Min Three (3) tracks are required for all configurations, along with integral sill adapter item # **10**. Optional 4-tracks & 5-tracks may be used. Min five (5) pairs of cluster anchors (total=10) are required at each interlock / astragal ends (see elevation & sheets 10, 11& 11.1). 1x or 2x buck to be properly secured. CMU to be grout filled.
3. Glass lites wider than 36" shall have two setting blocks per FBC requirements.
4. Max. Panel width not to exceed 60-1/8" wide & 130-1/8"high. Any numbers of panels are allowed which can be fit into overall continuous max door frame width= 500" and max allowable frame area of 488 ft^2.

LABELING: Each unit shall bear a permanent label with the manufacturer's name or logo, city, state and series and following statement: "Miami-Dade County Product Control Approved", noted herein.

RENEWAL of this NOA shall be considered after a renewal application has been filed and there has been no change in the applicable building code negatively affecting the performance of this product.

TERMINATION of this NOA will occur after the expiration date or if there has been a revision or change in the materials, use, and/or manufacture of the product or process. Misuse of this NOA as an endorsement of any product, for sales, advertising or any other purposes shall automatically terminate this NOA. Failure to comply with any section of this NOA shall be cause for termination and removal of NOA.

ADVERTISEMENT: The NOA number preceded by the words Miami-Dade County, Florida, and followed by the expiration date may be displayed in advertising literature. If any portion of the NOA is displayed, then it shall be done in its entirety.

INSPECTION: A copy of this entire NOA shall be provided to the user by the manufacturer or its distributors and shall be available for inspection at the job site at the request of the Building Official.

This **NOA revises** NOA **#17-0717.05** (former **SIW Impact Windows, LLC)** consists of this page 1 and evidence pages E-1, E-2 & E-3, as well as approval document mentioned above.

The submitted documentation was reviewed by **Ishaq I. Chanda, P.E.**

MIAMI-DADE COUNTY APPROVED
2/27/19

NOTICE OF ACCEPTANCE: EVIDENCE SUBMITTED

1. EVIDENCE SUBMITTED UNDER PREVIOUS APPROVALS

A. DRAWINGS

1. Manufacturer's die drawings and sections (submitted under file referenced below)
2. Drawing No. **W13-56 Rev C**, titled "Series 600KM -11 Alum Sliding Glass Door (LMI)", sheets 1, 1.1, 2 to 11, 11.1, 12 thru 16 of 16, dated 10-23-13 and last revised on FEB 25, 2016, prepared by Al-Farooq Corporation, signed and sealed by Javad Ahmad, P.E.

B. TESTS (submitted under files #**15-0528.16**/#**13-1212.10**)

1. Test reports on
   1) Air Infiltration Test, per FBC, TAS 202-94
   2) Uniform Static Air Pressure Test, Loading per FBC TAS 202-94
   3) Water Resistance Test, per FBC, TAS 202-94
   4) Large Missile Impact Test per FBC, TAS 201-94
   5) Cyclic Wind Pressure Loading per FBC, TAS 203-94
   6) Forced Entry Test, per FBC 2411 3.2.1 and TAS 202-94

   Along with installation diagrams of XpXXXXO and OXX aluminum (reinforced) Sliding Glass Door, prepared by Black Water Testing Inc., **BT-SIW-13-003** dated 11/26/2013, signed and sealed by Yamil Kuri, P.E.

   Note: This file has an addendum letter dated FEB 25, 2014 issued by Black Water Testing Inc., signed and sealed by Yamil Kuri, P.E.

C. CALCULATIONS

1. Anchor verification calculations complying with FBC2014 (5th Edition), prepared by Al Farooq Corporation, dated May 19, 2015 and last revised on 02/25/16, signed and sealed by Javad Ahmad, P.E.
2. Glazing complies w/ ASTME-1300-02, -04 & -09.

D. QUALITY ASSURANCE

1. Miami Dade Department of Regulatory and Economic Resources (RER).

E. MATERIAL CERTIFICATIONS

1. Notice of Acceptance No. **11-0624.02** issued to E.I. DuPont DeNemours & Co., Inc. for their "**DuPont Sentry Glass ® interlayer**", expiring on 01/14/17.
2. Material properties data sheet of Santoprene121-67W175 glazing gasket supplied by Central Plastic Inc.

F. STATEMENTS

1. Statement letter of conformance to FBC 2014 and letter of no financial interest, prepared by Al Farooq Corporation, dated 05/08/15, signed and sealed by Javad Ahmad, P.E.
2. Lab compliance as part of the above referenced test report.
3. Addendum letter dated FEB 25, 2014 issued by Black Water Testing Inc., signed and sealed by Yamil Kuri, P.E.

G. OTHER

1. This NOA revises NOA #**13-1212.10,** expiring 08/31/17.

Ishaq I. Chanda

Ishaq I. Chanda, P.E.
Product Control Unit Supervisor
NOA No. 19-0131.20
Expiration Date: August 31, 2022
Approval Date: March 07, 2019

NOTICE OF ACCEPTANCE: EVIDENCE SUBMITTED

2. EVIDENCE SUBMITTED UNDER PREVIOUS APPROVALS

A. DRAWINGS

1. Drawing No. **W13-56 Rev D**, titled "Series 600KM -11 Alum Sliding Glass Door (LMI)", sheets 1, 1.1, 2 to 11, 11.1, 12 thru 16 of 16, dated 10-23-13 and last revised on JUL 06, 2017, prepared by Al-Farooq Corporation, signed and sealed by Javad Ahmad, P.E.

B. TESTS

1. None.

C. CALCULATIONS

1. None.

D. QUALITY ASSURANCE

1. Miami Dade Department of Regulatory and Economic Resources (RER).

E. MATERIAL CERTIFICATIONS

1. Notice of Acceptance No. **14-0916.11** issued to Kuraray America, Inc. (former E.I. DuPont DeNemours & Co., Inc.) for the "**Sentry Glass ® Interlayer**", expiring on 07/4/18.

F. STATEMENTS

1. Statement letter of conformance to FBC 2014(**5th** Edition) & FBC 2017(**6th** Edition) and letter of no financial interest, prepared by Al Farooq Corporation, dated 08/24/17, signed and sealed by Javad Ahmad, P.E.

G. OTHER

1. This NOA **revises & renews** NOA #**15-0528.16,** expiring 08/31/22.

3. New Evidence submitted.

A. DRAWINGS

1. Drawing No. **W13-56 Rev E**, titled "Series 600KM -11 Alum Sliding Glass Door (LMI)", sheets 1, 1.1, 2 to 11, 11.1, 12 thru 16 of 16, dated 10-23-13 and last revised on Jan 08, 2019, prepared by Al-Farooq Corp., signed and sealed by Javad Ahmad, P. E.

B. TESTS

1. None.

C. CALCULATIONS

1. None.

D. QUALITY ASSURANCE

1. Miami Dade Department of Regulatory and Economic Resources (RER).

Ishaq I. Chanda

Ishaq I. Chanda, P.E.
Product Control Unit Supervisor
NOA No. 19-0131.20
Expiration Date: August 31, 2022
Approval Date: March 07, 2019

NOTICE OF ACCEPTANCE: EVIDENCE SUBMITTED

E. MATERIAL CERTIFICATIONS

1. Notice of Acceptance No. **17-0808.02** issued to **Kuraray America, Inc.** (Former E.I. DuPont DE Nemours & Co., Inc. for the "**Sentry Glass ® (Clear and White) Glass Interlayers**", expiring on 07/04/23.

F. STATEMENTS

1. Statement letter of conformance to FBC 2014(**5th** Edition) & FBC 2017(**6th** Edition) and letter of no financial interest, prepared by Al Farooq Corporation, dated 08/24/17, signed and sealed by Javad Ahmad, P.E. **(**submitted under file **#17-0717.05)**
2. Statement letter dated DEC 28, 2019, issued by SIW Impact Window, LLC that it has sold all assets of Exhibit "A" NOA(s), equipment's, accessories and "Know how" and No longer manufacture the products and request to rescind the Exhibit "A" NOA(s), signed by Abdiel Lopez, Manager.
3. Statement letter dated DEC 30, 2019, issued by SIW Solution, LLC that it has purchased all assets of Exhibit "A" NOA(s), equipment's, accessories and "Know how" and request Name change of the Exhibit "A" NOA(s) , signed by Steven A. Tourek, Secretary.

G. OTHER

1. This **NOA revises # 17-0717.05** (former **SIW Impact Window, LLC**), expiring 08/31/2022.
2. Bill of sale dated DEC 28, 2018 between SIW Impact Window (Seller) and SIW Solution, LLC, (purchaser), signed by respective company's representative, Abdiel Lopez, Manager and Steven A. Tourek, Secretary.
3. Division of corporation listing of SIW LLC, as active status.

Ishaq I. Chanda

Ishaq I. Chanda, P.E.
Product Control Unit Supervisor
NOA No. 19-0131.20
Expiration Date: August 31, 2022
Approval Date: March 07, 2019

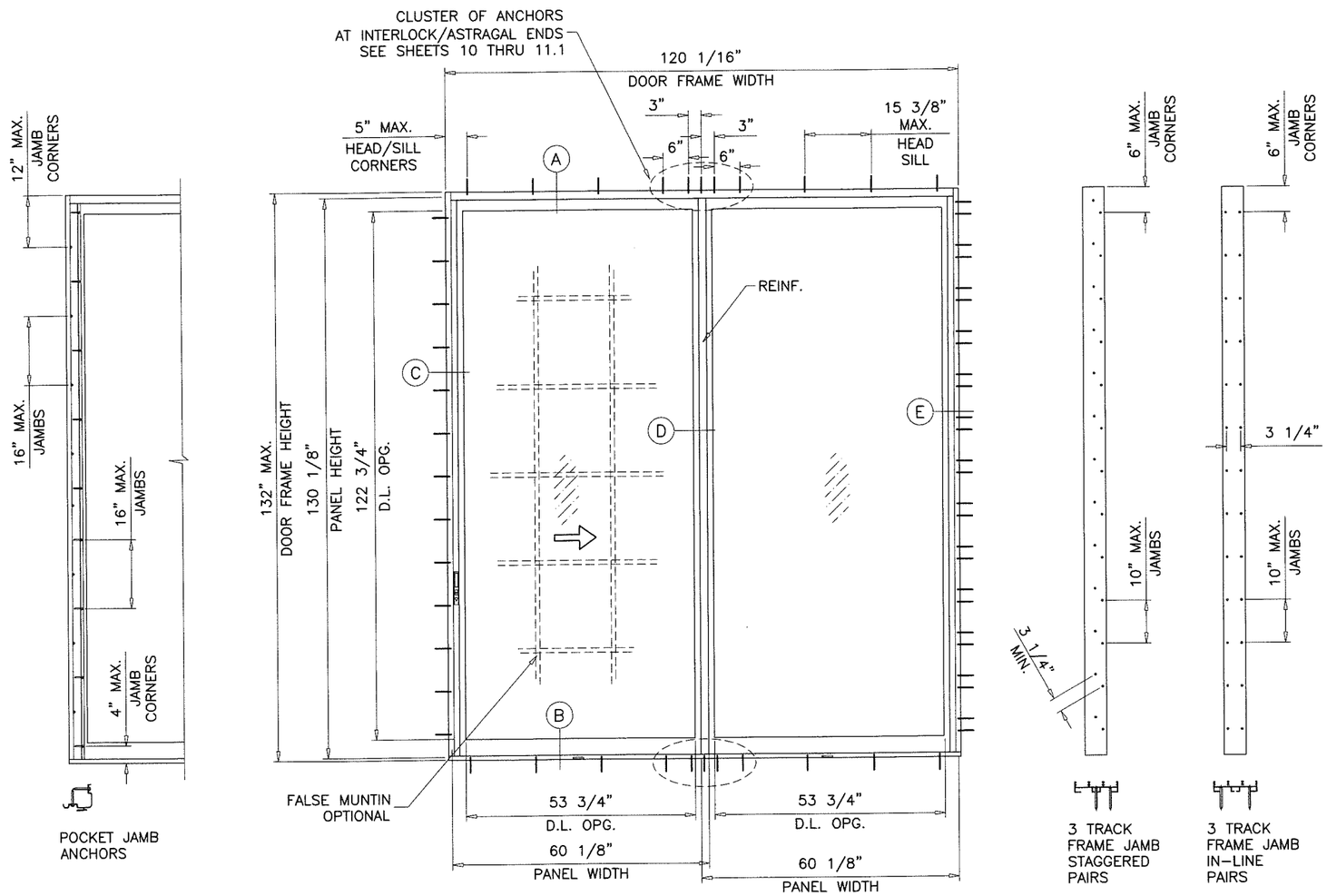

THESE DOORS ARE RATED FOR LARGE & SMALL MISSILE IMPACT.
SHUTTERS ARE NOT REQUIRED.

TYPICAL ELEVATION
XO

PRODUCT REVIEWED
as complying with the Florida
Building Code
Acceptance No. 19-0131.20
Expiration Date 11/05/2022
By Chung T. Chanda
Miami-Dade Product Control

SERIES '600KM-11' ALUMINUM SLIDING GLASS DOOR

THIS PRODUCT HAS BEEN DESIGNED AND TESTED TO COMPLY WITH THE REQUIREMENTS OF THE 2017 (6TH EDITION) FLORIDA BUILDING CODE INCLUDING HIGH VELOCITY HURRICANE ZONE (HVHZ).

1BY OR 2BY WOOD BUCKS & BUCK FASTENERS BY OTHERS, MUST BE DESIGNED AND INSTALLED ADEQUATELY TO TRANSFER APPLIED PRODUCT LOADS TO THE BUILDING STRUCTURE.

ANCHORS SHALL BE CORROSION RESISTANT, SPACED AS SHOWN ON DETAILS AND INSTALLED PER MANUF'S INSTRUCTIONS. SPECIFIED EMBEDMENT TO BASE MATERIAL SHALL BE BEYOND WALL DRESSING OR STUCCO.

A LOAD DURATION INCREASE IS USED IN DESIGN OF ANCHORS INTO WOOD ONLY.

ALL SHIMS TO BE HIGH IMPACT, NON-METALLIC AND NON-COMPRESSIBLE.

MATERIALS INCLUDING BUT NOT LIMITED TO STEEL/METAL SCREWS, THAT COME INTO CONTACT WITH OTHER DISSIMILAR MATERIALS SHALL MEET THE REQUIREMENTS OF THE 2017 FLORIDA BUILDING CODE & ADOPTED STANDARDS.

THIS PRODUCT APPROVAL IS GENERIC AND DOES NOT PROVIDE INFORMATION FOR A SITE SPECIFIC PROJECT, i.e. LIFE SAFETY OF THIS PRODUCT, ADEQUACY OF STRUCTURE RECEIVING THIS PRODUCT AND SEALING AROUND OPENING FOR WATER INFILTRATION RESISTANCE ETC.
CONDITIONS NOT SHOWN IN THIS DRAWING ARE TO BE ANALYZED SEPARATELY, AND TO BE REVIEWED BY BUILDING OFFICIAL.

DAYLITE OPENINGS:
D.L.O. HEIGHT = PANEL HEIGHT − 7.375"
D.L.O. WIDTH = PANEL WIDTH − 6.375"
PANEL HEIGHT = DOOR FRAME HEIGHT − 1.875"

NOTE:
GLASS CAPACITIES ON THIS SHEET ARE BASED ON ASTM E1300-09 (3 SEC. GUSTS) AND FLORIDA BUILDING COMMISSION DECLARATORY STATEMENT DCA05-DEC-219

MAXIMUM DESIGN LOAD RATING (FOR SIZES SHOWN OR SMALLER) AS PERMITTED BY FBC	+ 55.0 PSF − 55.0 PSF

DOOR HEIGHT AND WIDTH SIZE MUST COMPLY EGRESS REQUIREMENTS PER FBC AS APPLICABLE.

JAWAD AHMAD
LICENSE
No. 70592
Jan 8,2019
STATE OF FLORIDA
PROFESSIONAL ENGINEER

AL-FAROOQ CORPORATION
ENGINEERS & PRODUCT DEVELOPMENT
9360 SUNSET DRIVE, SUITE 220
MIAMI, FLORIDA 33173 (C.A.N. 3538)
TEL. (305) 264-8100 FAX. (305) 262-6978
COMP-ANL\W13-56SIW

SERIES '600KM-11' ALUM SLIDING GLASS DOOR (L.M.I.)

SIW Solutions, LLC.
975 S. CONGRESS AVE. #102
DELRAY BEACH, FL. 33445
TEL. (561) 274-9392 FAX. (561) 274-9262

revisions:

no	date	by	description
A	02.25.14		REV. PER RER COMMENTS
B	05.15.15		UPDATED TO 2014 FBC
C	02.22.16		REV. PER RER COMMENTS
D	05.16.17		EDITORIAL CHANGES ONLY
E	12.05.18		COMPANY NAME REV.

date: 10-23-13
scale: 3/8"=1'-0"
dr. by: TARIQ
chk. by:

drawing no.
W13-56

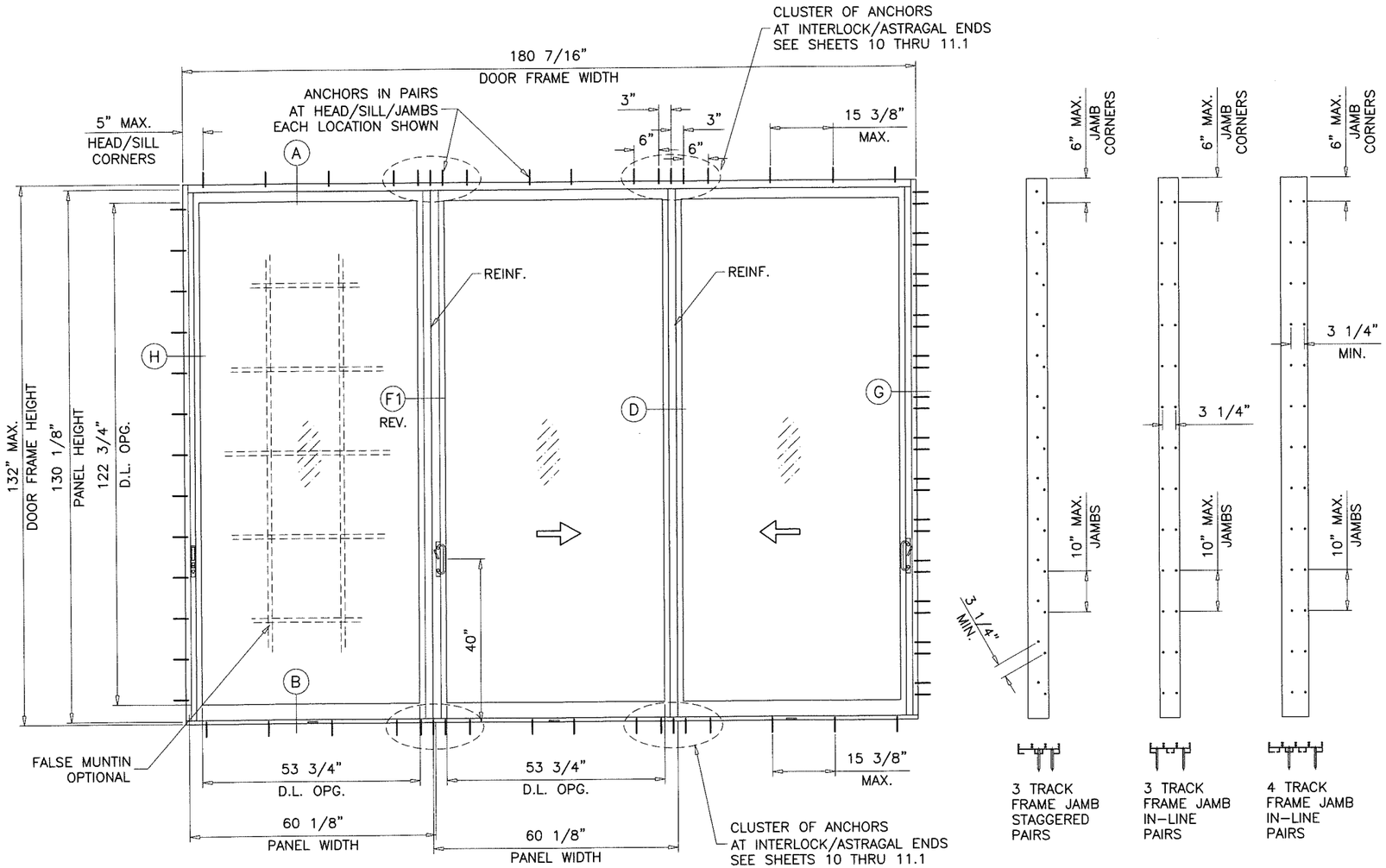

TYPICAL ELEVATION
O–XX

PRODUCT REVIEWED
as complying with the Florida
Building Code
Acceptance No 19-0131.20
Expiration Date 8/31/22
By Ishq I. Chaudhry
Miami-Dade Product Control

JAVAD AHMAD
LICENSE
No. 70592
Jan 8,2019
STATE OF
FLORIDA
PROFESSIONAL ENGINEER

AL-FAROOQ CORPORATION
ENGINEERS & PRODUCT DEVELOPMENT
9360 SUNSET DRIVE, SUITE 220
MIAMI, FLORIDA 33173 (C.A.N. 3538)
TEL. (305) 264-8100 FAX. (305) 262-6978

COMP–ANL\W13–56SIW

SERIES '600KM–11' ALUM SLIDING GLASS DOOR (L.M.I.)

SIW Solutions, LLC.
975 S. CONGRESS AVE. #102
DELRAY BEACH, FL. 33445
TEL. (561) 274–9262 FAX. (561) 274–9392

revisions:

no	date	by	description
A	02.25.14		REV. PER RER COMMENTS
B	05.15.15		UPDATED TO 2014 FBC
C	02.22.16		NO CHANGE THIS SHEET
D	05.16.17		EDITORIAL CHANGES ONLY
E	12.05.18		COMPANY NAME REV.

date: 10–23–13
scale: 3/8"=1'–0"
dr. by: TARIQ
chk. by:

drawing no.
W13–56

sheet 1.1 of 16

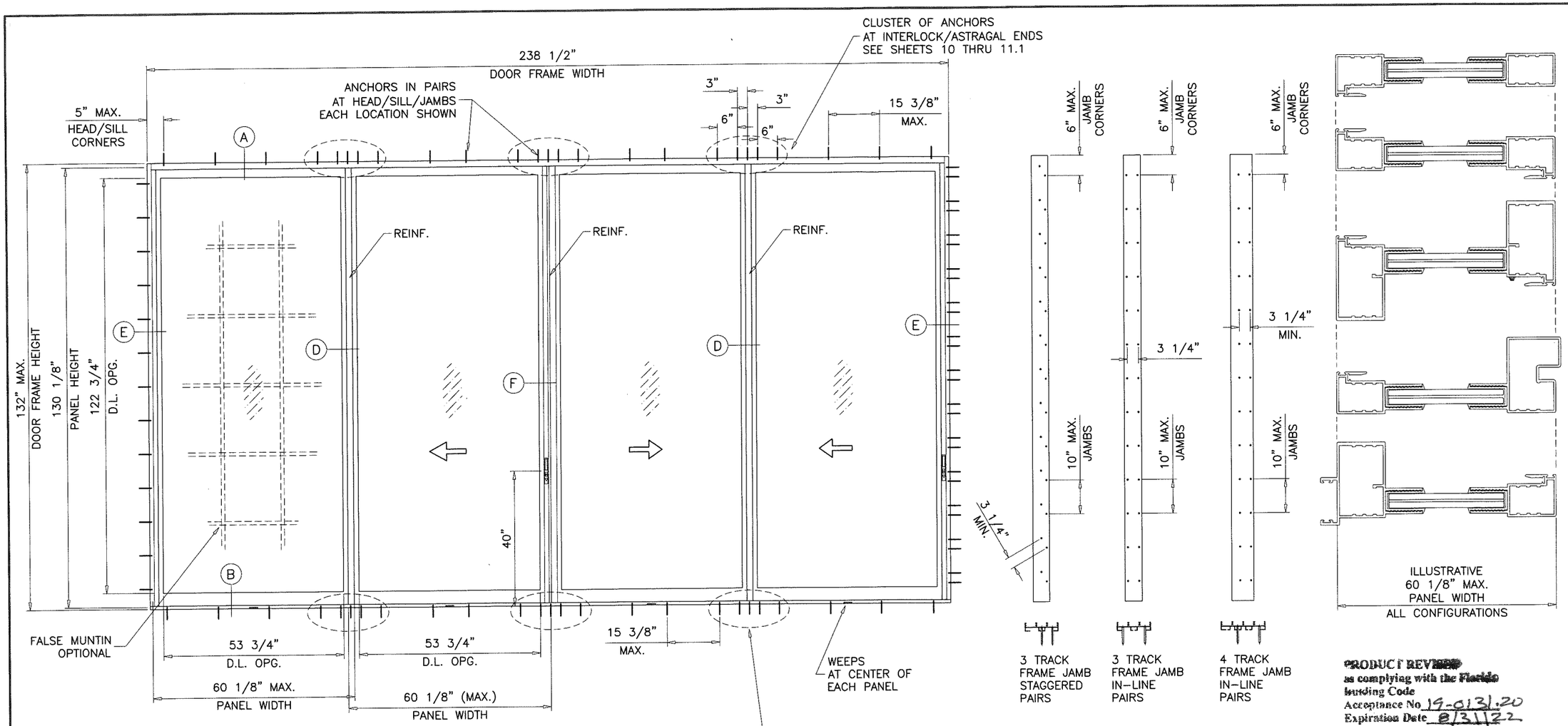

TYPICAL ELEVATION

OX–XX

PRODUCT REVIEWED
as complying with the Florida
Building Code
Acceptance No. 19-0131.20
Expiration Date 8/31/22
By Liling L. Chang
Miami-Dade Product Control

MAXIMUM DESIGN LOAD RATING	= + 55.0 PSF
(FOR SIZES SHOWN OR SMALLER)	– 55.0 PSF
AS PERMITTED BY FBC	

DOOR HEIGHT AND WIDTH SIZE MUST COMPLY
EGRESS REQUIREMENTS PER FBC AS APPLICABLE.

NOTE:
GLASS CAPACITIES ON THIS SHEET ARE
BASED ON ASTM E1300–09 (3 SEC. GUSTS)
AND FLORIDA BUILDING COMMISSION
DECLARATORY STATEMENT DCA05–DEC–219

JAWAD AHMAD
LICENSE
No. 70592
Jan 8,2019
STATE OF
FLORIDA
PROFESSIONAL ENGINEER

AL-FAROOQ CORPORATION
ENGINEERS & PRODUCT DEVELOPMENT
9360 SUNSET DRIVE, SUITE 220
MIAMI, FLORIDA 33173 (C.A.N. 3538)
TEL. (305) 264-8100 FAX. (305) 262-6978
COMP–ANL\W13–56SIW

SERIES '600KM–11' ALUM SLIDING GLASS DOOR (L.M.I.)

SIW Solutions, LLC.
975 S. CONGRESS AVE. #102
DELRAY BEACH, FL. 33445
TEL. (561) 274–9392 FAX. (561) 274–9262

revisions:

no	date	by	description
A	02.25.14		REV. PER RER COMMENTS
B	05.15.15		UPDATED TO 2014 FBC
C	02.22.16		NO CHANGE THIS SHEET
D	05.16.17		EDITORIAL CHANGES ONLY
E	12.05.18		COMPANY NAME REV.

date: 10–23–13
scale: 3/8"=1'–0"
dr. by: TARIQ
chk. by:

drawing no.
W13–56

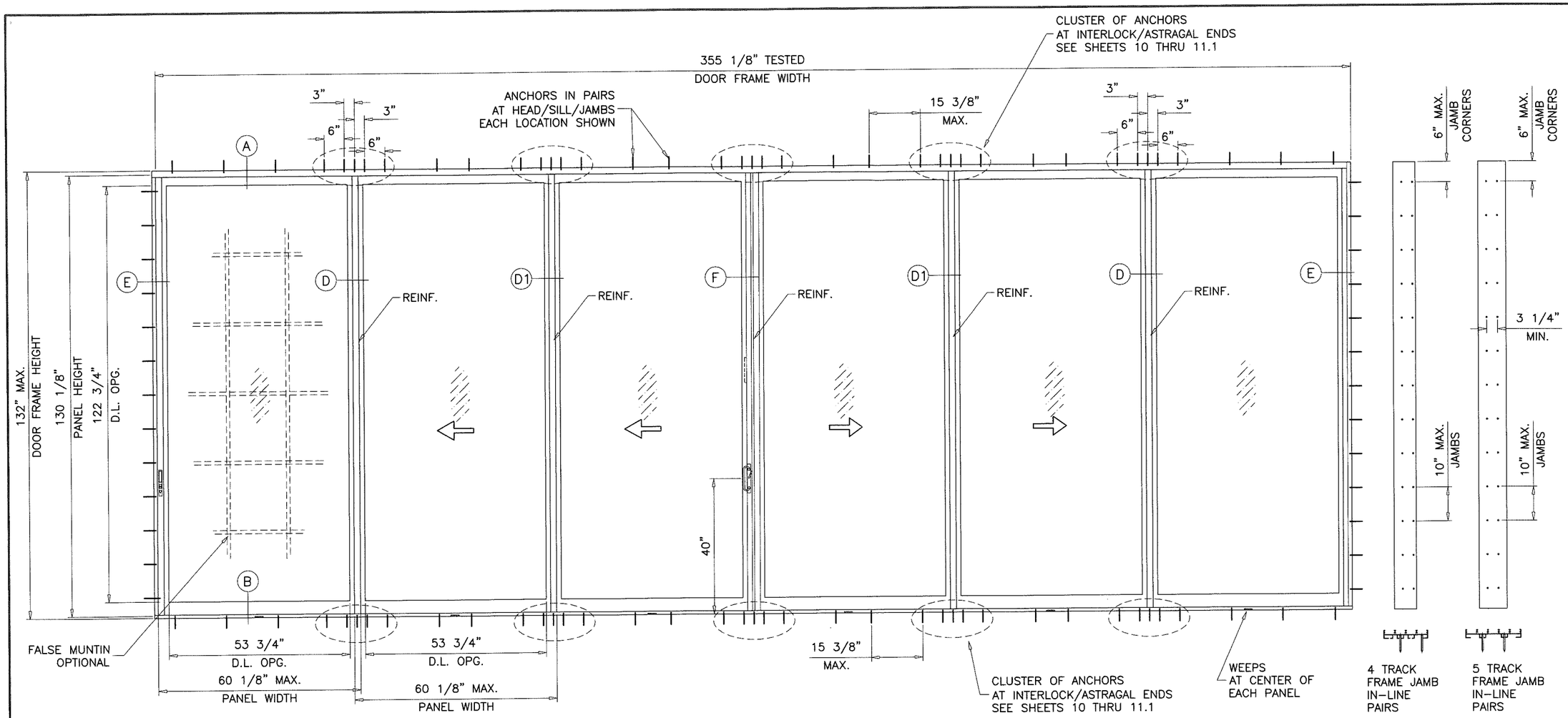

TYPICAL ELEVATION

OXX–XXO

MAXIMUM DESIGN LOAD RATING =	+ 55.0 PSF
(FOR SIZES SHOWN OR SMALLER)	– 55.0 PSF
AS PERMITTED BY FBC	

DOOR HEIGHT AND WIDTH SIZE MUST COMPLY EGRESS REQUIREMENTS PER FBC AS APPLICABLE.

NOTE:
THIS NOA ALLOWS ANY NUMBER OF PANELS ON 3, 4 OR 5 TRACK FRAMES WHERE TESTED STILE COMBINATIONS ARE PRESENT
MAX. NOMINAL PANEL WIDTH = 60–1/8"
MAX. DOOR HEIGHT = 132"
MAX. OVERALL DOOR FRAME AREA = 488 SQ. FT.
MAX. OVERALL FRAME WIDTH = 500"

NOTE:
GLASS CAPACITIES ON THIS SHEET ARE BASED ON ASTM E1300–09 (3 SEC. GUSTS) AND FLORIDA BUILDING COMMISSION DECLARATORY STATEMENT DCA05–DEC–219

PRODUCT REVISED
to complying with the Florida
Building Code
Acceptance No. 19-0131.20
Expiration Date 8/31/23
Product Control

JAVAD AHMAD
LICENSE
No. 70592
Jan 8,2019
STATE OF FLORIDA
PROFESSIONAL ENGINEER

AL-FAROOQ CORPORATION
ENGINEERS & PRODUCT DEVELOPMENT
9360 SUNSET DRIVE, SUITE 220
MIAMI, FLORIDA 33173 (C.A.N. 3538)
TEL. (305) 264-8100 FAX. (305) 262-6978

COMP–ANL\W13–56SIW

SERIES '600KM–11' ALUM SLIDING GLASS DOOR (L.M.I.)

SIW Solutions, LLC.
975 S. CONGRESS AVE. #102
DELRAY BEACH, FL. 33445
TEL. (561) 274–9392 FAX. (561) 274–9262

revisions:

no	date	by	description
A	02.25.14		REV. PER RER COMMENTS
B	05.15.15		UPDATED TO 2014 FBC
C	02.22.16		NO CHANGE THIS SHEET
D	05.16.17		EDITORIAL CHANGES ONLY
E	12.05.18		COMPANY NAME REV.

date: 10–23–13
scale: 3/8"=1'–0"
dr. by: TARIQ
chk. by:

drawing no.
W13–56

ITEM	PART #	QUANTITY	DESCRIPTION	MATERIAL	MANF./SUPPLIER/REMARKS
1A	SIW702	1	3 TRACK FRAME HEAD	6063–T6	–
1B	SIW727	1	4 TRACK FRAME HEAD	6063–T6	–
1C	SIW723	1	5 TRACK FRAME HEAD	6063–T6	–
2A	SIW701	1	3 TRACK FRAME SILL	6063–T6	–
2B	SIW728	1	4 TRACK FRAME SILL	6063–T6	–
2C	SIW724	1	5 TRACK FRAME SILL	6063–T6	–
3A	SIW703	1 OR 2	3 TRACK FRAME JAMB	6063–T6	–
3B	SIW729	1 OR 2	4 TRACK FRAME JAMB	6063–T6	–
3C	SIW725	1 OR 2	5 TRACK FRAME JAMB	6063–T6	–
4	SIW709	1/ PANEL	PANEL TOP RAIL	6063–T6	–
5	SIW710	1/ PANEL	PANEL BOTTOM RAIL	6063–T6	–
6	SIW705	1/ PANEL	JAMB/LOCK STILE	6063–T6	–
6A	SIW718	1/ PANEL	H.D. LOCK STILE	6063–T6	–
7	SIW707	1/ PANEL	STD. INTERLOCK STILE	6063–T6	–
8	SIW708	1/ PANEL	H.D. INTERLOCK STILE	6063–T6	–
9	SIW706	1/ PANEL	FEMALE ASTRAGAL STILE	6063–T6	–
10	SIW704C	AS REQD.	2–3/4" SILL ADAPTER	6063–T5	–
11	SIW901A	AS REQD.	REINFORCEMENT	6063–T6	–
12	SIW703A	AS REQD.	JAMB ANCHOR COVER	6061–T6	–
13	5776	AS REQD.	GLAZING GASKET	SANTOPRENE	CENTRAL PLASTICS INC.
14A	W13235	AS REQD.	PILE W'STRIPPING	WOOLPILE	ULTRAFAB INC.
14B	W13295	AS REQD.	PILE W'STRIPPING	WOOLPILE	ULTRAFAB INC.
14C	W23385	AS REQD.	FIN SEAL PILE W'STRIPPING	WOOLPILE	ULTRAFAB INC.
15	9270SI	AS REQD.	BULB W'STRIPPING	VINYL	CENTRAL PLASTICS
16	D2505	AS REQD.	PILE PADS	WOOLPILE	ULTRAFAB
18	*	AS REQD.	LOCKS WITH INTERNAL MECHANISM	–	ARCH/ASHLAND
18A	**	AS REQD.	BOLT LOCK MECHANISM	–	INTERLOCK USA
19	1989–PRN	2/ PANEL	ROLLER ASSEMBLY	–	AMESBURY HARDWARE PRODUCTS
21	#14 X 1–1/2"	2/ CORNER	PANEL ASSEMBLY SCREWS	–	PH SMS
22	–	–	–	–	–
23	SIW726	1	HOOK STRIP	6063–T5	–

* ARCH NON–KEYED HANDLESET (SIW–3292) LOCATED AT 40" FROM BOTTOM ENGAGING INTERNAL LOCK MECHANISM (ADH–3008–84), BY ASHLAND HARDWARE PRODUCTS.

** MANUAL BOLT LOCK (BF01–6501) LOCATED AT 60" FROM TOP ENGAGING DRIVE ROD (DL01–6002) AND ROD TIP (DL01–6041) INTO THE FRAME HEAD, BY INTERLOCK USA.

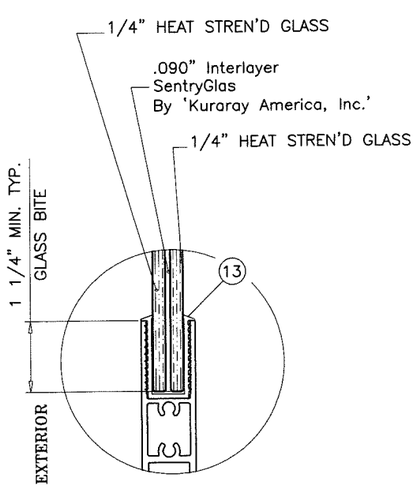

GLAZING DETAIL

9/16" OVERALL LAMINATED GLASS

PRODUCT REVISED
In complying with the Florida
Building Code
Acceptance No. 19-0131.20
Expiration Date 8/31/22
Product Control

JAWAD AHMAD
LICENSE
No. 70592
Jan 8,2019
STATE OF
FLORIDA
PROFESSIONAL ENGINEER

AL-FAROOQ CORPORATION
ENGINEERS & PRODUCT DEVELOPMENT
9360 SUNSET DRIVE, SUITE 220
MIAMI, FLORIDA 33173 (C.A.N. 3538)
TEL. (305) 264-8100 FAX. (305) 262-6978

COMP–ANL\W13–56SIW

SERIES '600KM–11' ALUM SLIDING GLASS DOOR (L.M.I.)

SIW Solutions, LLC.
975 S. CONGRESS AVE. #102
DELRAY BEACH, FL. 33445
TEL. (561) 274–9392 FAX. (561) 274–9262

revisions:

no	date	by	description
A	02.25.14		REV. PER RER COMMENTS
B	05.15.15		UPDATED TO 2014 FBC
C	02.22.16		REV. PER RER COMMENTS
D	05.16.17		EDITORIAL CHANGES ONLY
E	12.05.18		COMPANY NAME REV.

date: 10–23–13
scale: 3/8" = 1"
dr. by: TARIQ
chk. by:

drawing no.
W13–56

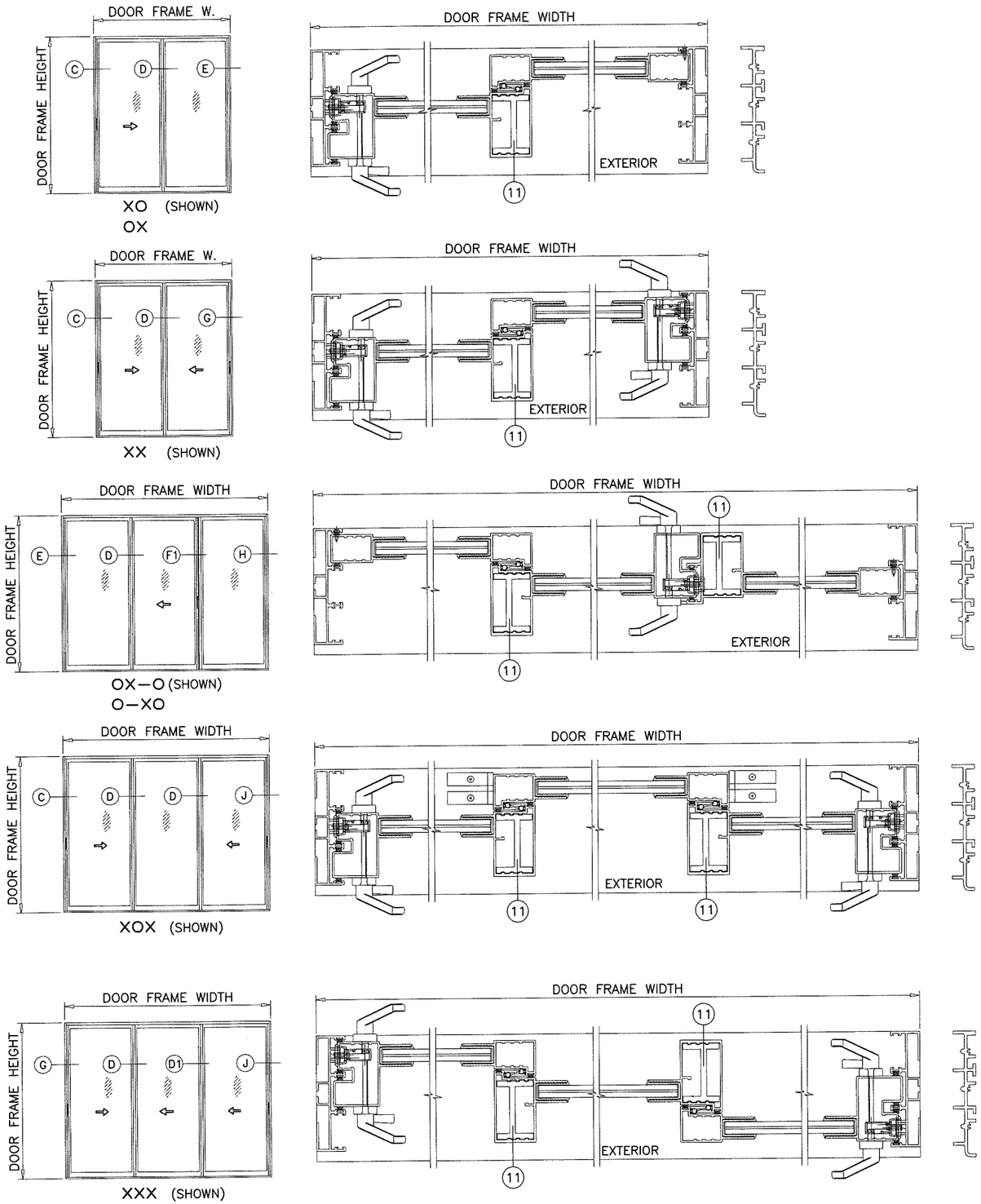

APPROVED CONFIGURATIONS
NON–POCKETED DOORS
THREE (3) TRACKS

NOTE:
CONFIGURATIONS SHOWN FOR ILLUSTRATION PURPOSE ONLY
(SEE APPLICABLE ANCHOR INSTALLATIONS IN SHEETS 10 THRU 14)
SEE APPLICABLE ELEVATION FOR ANCHOR LOCATION IN SHEETS 1 THRU 3.

THIS NOA ALLOWS ANY NUMBER OF PANELS ON 3, 4 OR 5 TRACK FRAMES WHERE TESTED STILE COMBINATIONS ARE PRESENT
MAX. NOMINAL PANEL WIDTH = 60–1/8"
MAX. DOOR HEIGHT = 132"
MAX. OVERALL DOOR FRAME AREA = 488 SQ. FT.
MAX. OVERALL FRAME WIDTH = 500"

PRODUCT REVIEWED
as complying with the Florida
Building Code
Acceptance No. 19-0131.20
Expiration Date 8/31/22
Miami-Dade Product Control

JAVAD AHMAD
LICENSE
No. 70592
Jan 8,2019
STATE OF
FLORIDA
PROFESSIONAL ENGINEER

AL-FAROOQ CORPORATION
ENGINEERS & PRODUCT DEVELOPMENT
9360 SUNSET DRIVE, SUITE 220
MIAMI, FLORIDA 33173 (C.A.N. 3538)
TEL. (305) 264-8100 FAX. (305) 262-6978

COMP–ANL\W13–56SIW

SERIES '600KM–11' ALUM SLIDING GLASS DOOR (L.M.I.)

SIW Solutions, LLC.
975 S. CONGRESS AVE. #102
DELRAY BEACH, FL. 33445
TEL. (561) 274–9392 FAX. (561) 274–9262

revisions:

no	date	by	description
A	02.25.14		REV. PER RER COMMENTS
B	05.15.15		UPDATED TO 2014 FBC
C	02.22.16		NO CHANGE THIS SHEET
D	05.16.17		EDITORIAL CHANGES ONLY
E	12.05.18		COMPANY NAME REV.

date: 10–23–13
scale: –
dr. by: TARIQ
chk. by:

drawing no.
W13–56

NOTE:
CONFIGURATIONS SHOWN FOR ILLUSTRATION PURPOSE ONLY
(SEE APPLICABLE ANCHOR INSTALLATIONS IN SHEETS 10 THRU 14)
SEE APPLICABLE ELEVATION FOR ANCHOR LOCATION IN SHEETS 1 THRU 3.

THIS NOA ALLOWS ANY NUMBER OF PANELS ON 3, 4 OR 5 TRACK FRAMES WHERE TESTED STILE COMBINATIONS ARE PRESENT
MAX. NOMINAL PANEL WIDTH = 60-1/8"
MAX. DOOR HEIGHT = 132"
MAX. OVERALL DOOR FRAME AREA = 488 SQ. FT.
MAX. OVERALL FRAME WIDTH = 500"

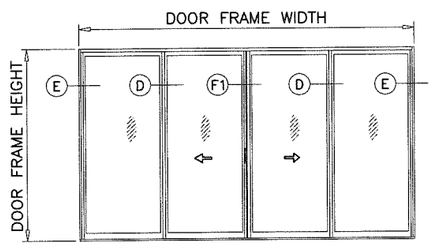

OX–XO (SHOWN)

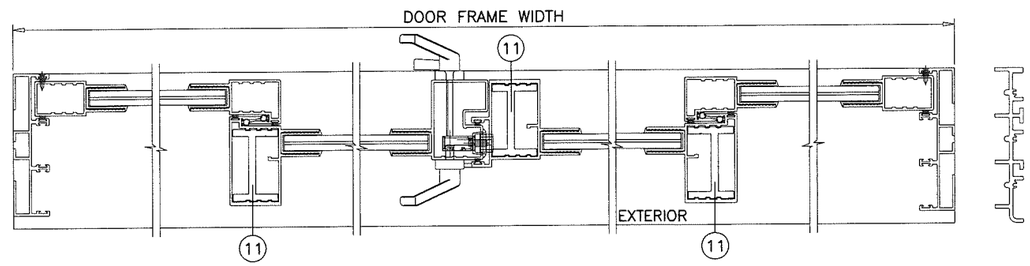

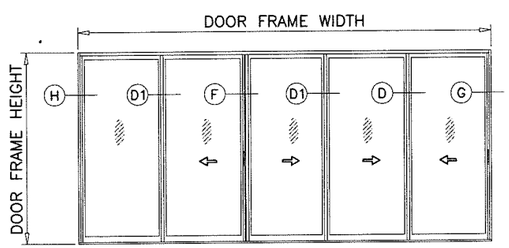

OX–XXX (SHOWN)

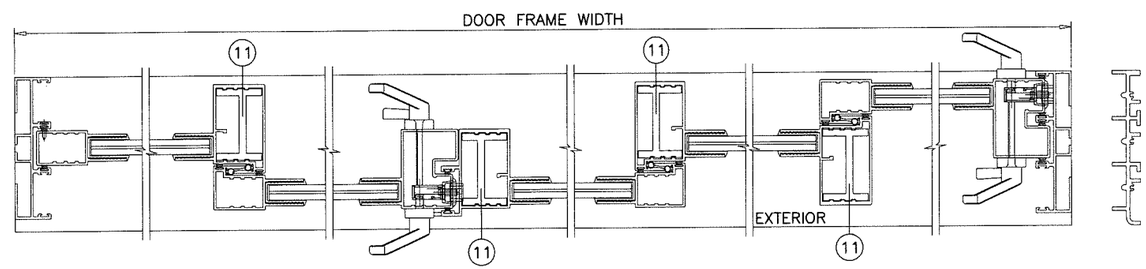

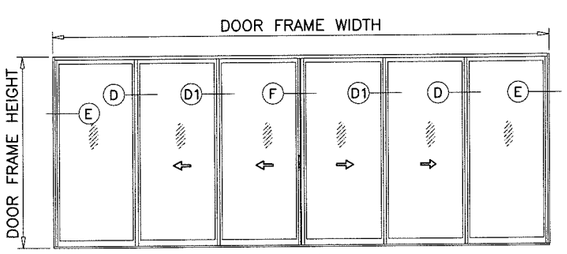

OXX–XXO (SHOWN)

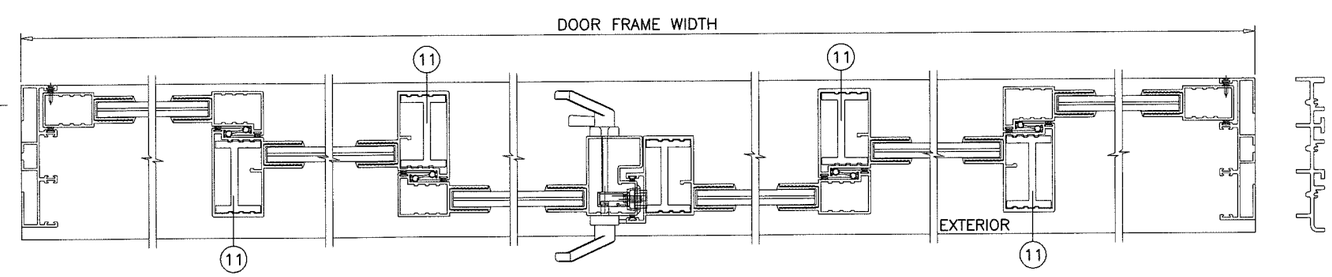

APPROVED CONFIGURATIONS
NON–POCKETED DOORS
THREE (3) TRACKS

PRODUCT REVIEWED
as complying with the Florida
Building Code
Acceptance No. 19-0131.20
Expiration Date 8/31/22
Ishaq I. Chande
Manager, Product Control

JAVAD AHMAD
LICENSE
No. 70592
Jan 8,2019
STATE OF FLORIDA
PROFESSIONAL ENGINEER

AL-FAROOQ CORPORATION
ENGINEERS & PRODUCT DEVELOPMENT
9360 SUNSET DRIVE, SUITE 220
MIAMI, FLORIDA 33173 (C.A.N. 3538)
TEL. (305) 264-8100 FAX. (305) 262-6978

COMP–ANL\W13–56SIW

SERIES '600KM–11' ALUM SLIDING GLASS DOOR (L.M.I.)

SIW Solutions, LLC.
975 S. CONGRESS AVE. #102
DELRAY BEACH, FL. 33445
TEL. (561) 274–9392 FAX. (561) 274–9262

revisions:

no	date	by	description
A	02.25.14		REV. PER RER COMMENTS
B	05.15.15		UPDATED TO 2014 FBC
C	02.22.16		NO CHANGE THIS SHEET
D	05.16.17		EDITORIAL CHANGES ONLY
E	12.05.18		COMPANY NAME REV.

date: 10–23–13
scale: –
dr. by: TARIQ
chk. by:

drawing no.
W13–56

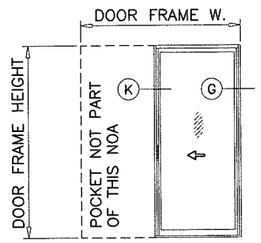

PX (SHOWN)
XP

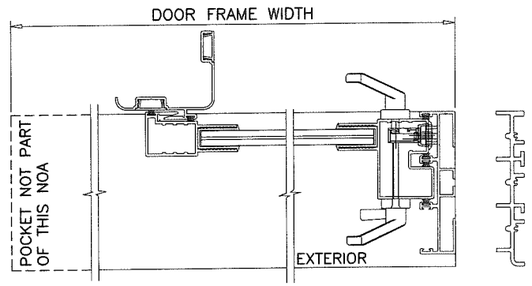

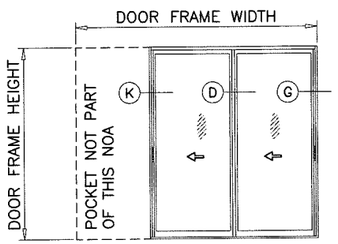

PXX (SHOWN)

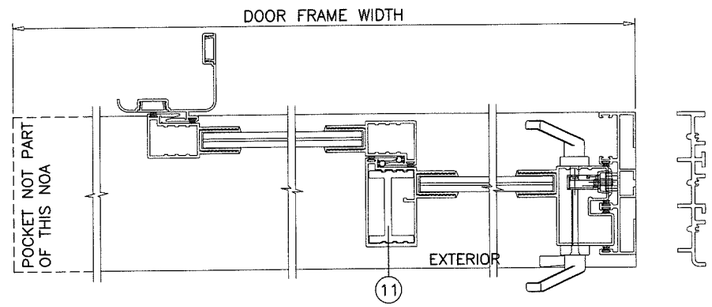

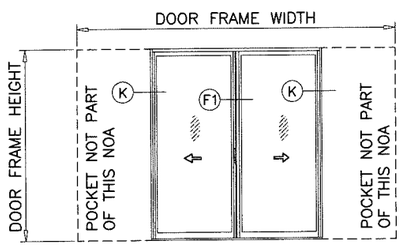

PX–XP(SHOWN)

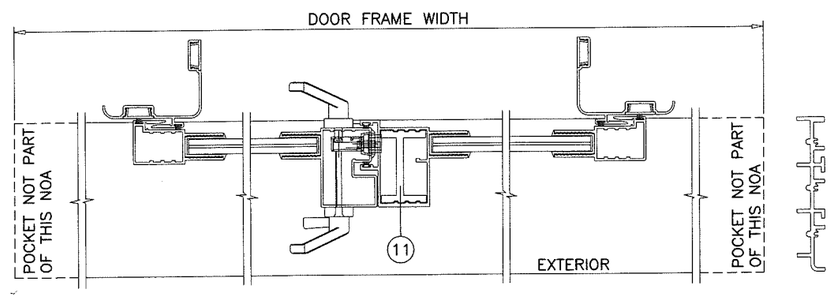

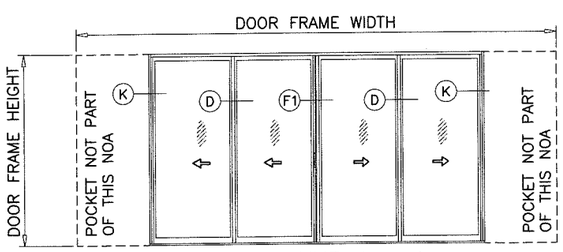

PXX–XXP (SHOWN)

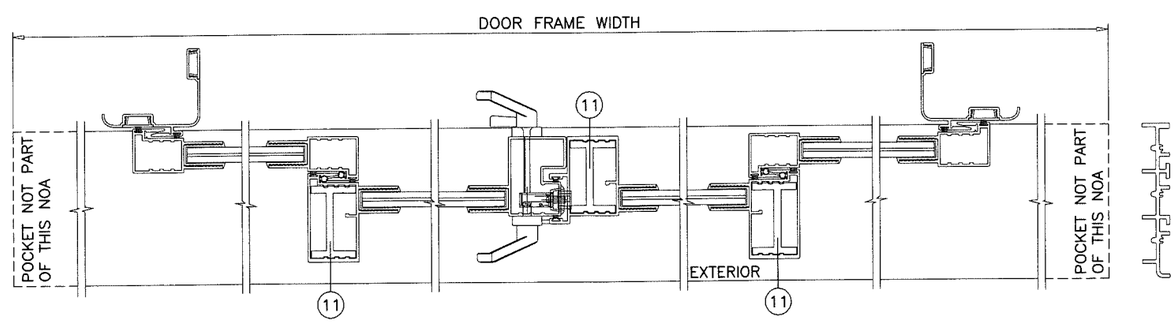

APPROVED CONFIGURATIONS
POCKETED DOORS
THREE (3) TRACKS

NOTE:
CONFIGURATIONS SHOWN FOR ILLUSTRATION PURPOSE ONLY
(SEE APPLICABLE ANCHOR INSTALLATIONS IN SHEETS 10 THRU 14)
SEE APPLICABLE ELEVATION FOR ANCHOR LOCATION IN SHEETS 1 THRU 3.

THIS NOA ALLOWS ANY NUMBER OF PANELS ON 3, 4 OR 5 TRACK FRAMES WHERE TESTED STILE COMBINATIONS ARE PRESENT
MAX. NOMINAL PANEL WIDTH = 60–1/8"
MAX. DOOR HEIGHT = 132"
MAX. OVERALL DOOR FRAME AREA = 488 SQ. FT.
MAX. OVERALL FRAME WIDTH = 500"

PRODUCT REVISED
as complying with the Florida
Building Code
Acceptance No. 19-0131.20
Expiration Date 8/31/22
Miami-Dade Product Control

JAVAD AHMAD
LICENSE
No. 70592
Jan 8,2019
STATE OF FLORIDA
PROFESSIONAL ENGINEER

AL-FAROOQ CORPORATION
ENGINEERS & PRODUCT DEVELOPMENT
9360 SUNSET DRIVE, SUITE 220
MIAMI, FLORIDA 33173 (C.A.N. 3538)
TEL. (305) 264-8100 FAX. (305) 262-6978

COMP–ANL\W13–56SIW

SERIES '600KM–11' ALUM SLIDING GLASS DOOR (L.M.I.)

SIW Solutions, LLC.
975 S. CONGRESS AVE. #102
DELRAY BEACH, FL. 33445
TEL. (561) 274–9392 FAX. (561) 274–9262

revisions:

no	date	by	description
A	02.25.14		REV. PER RER COMMENTS
B	05.15.15		UPDATED TO 2014 FBC
C	02.22.16		NO CHANGE THIS SHEET
D	05.16.17		EDITORIAL CHANGES ONLY
E	12.05.18		COMPANY NAME REV.

date: 10–23–13
scale: –
dr. by: TARIQ
chk. by:

drawing no.
W13–56

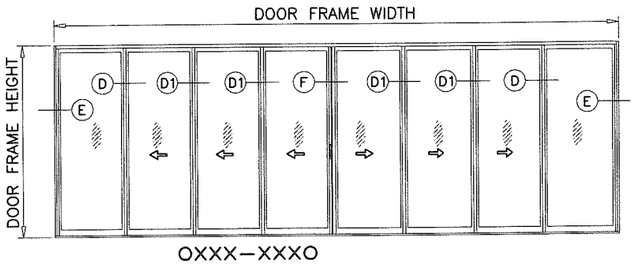

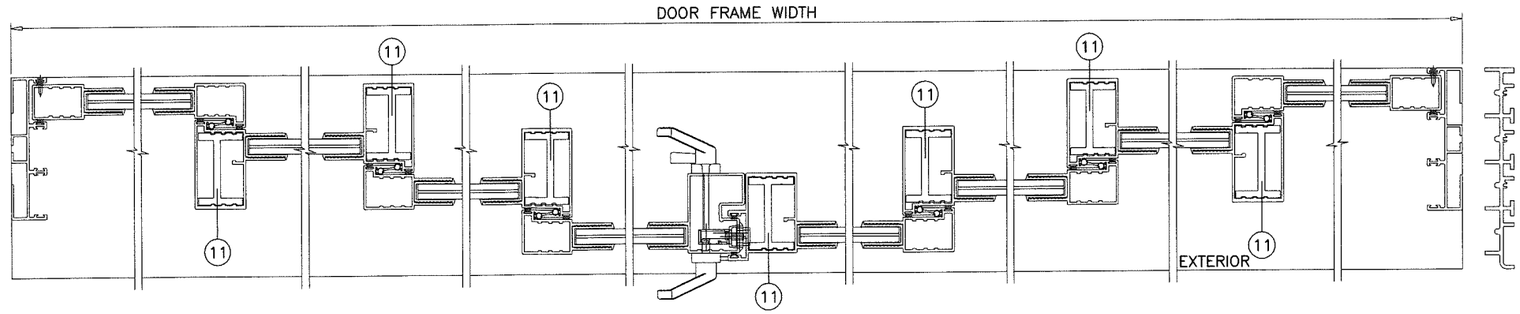

APPROVED CONFIGURATIONS
NON–POCKETED DOORS

FOUR (4) TRACKS

NOTE:
CONFIGURATIONS SHOWN FOR ILLUSTRATION PURPOSE ONLY
(SEE APPLICABLE ANCHOR INSTALLATIONS IN SHEETS 10 THRU 14)
SEE APPLICABLE ELEVATION FOR ANCHOR LOCATION IN SHEETS 1 THRU 3.

THIS NOA ALLOWS ANY NUMBER OF PANELS ON 3, 4 OR 5 TRACK FRAMES WHERE TESTED STILE COMBINATIONS ARE PRESENT
MAX. NOMINAL PANEL WIDTH = 60–1/8"
MAX. DOOR HEIGHT = 132"
MAX. OVERALL DOOR FRAME AREA = 488 SQ. FT.
MAX. OVERALL FRAME WIDTH = 500"

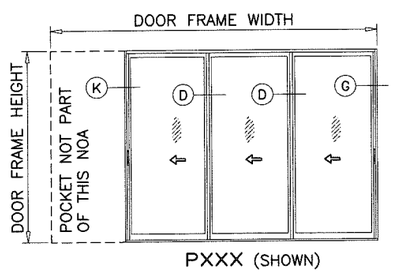

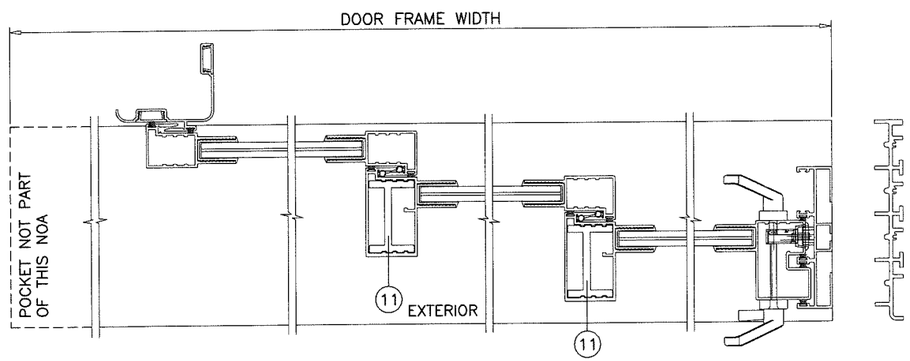

PRODUCT REVISED
in complying with the Florida Building Code
Acceptance No. 19-0131.20
Expiration Date 8/31/22
Product Control

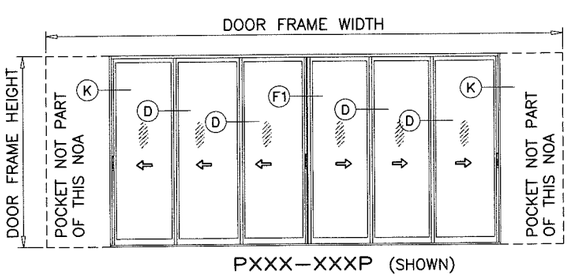

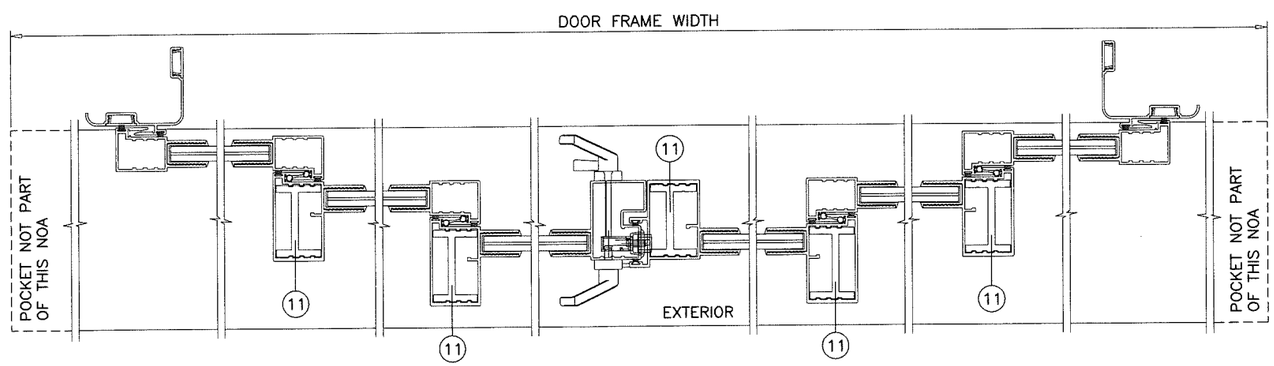

APPROVED CONFIGURATIONS
POCKETED DOORS

FOUR (4) TRACKS

JAWAD AHMAD
LICENSE
No. 70592
Jan 8,2019
STATE OF FLORIDA
PROFESSIONAL ENGINEER

AL-FAROOQ CORPORATION
ENGINEERS & PRODUCT DEVELOPMENT
9360 SUNSET DRIVE, SUITE 220
MIAMI, FLORIDA 33173 (C.A.N. 3538)
TEL. (305) 264-8100 FAX. (305) 262-6978

COMP–ANL\W13–56SIW

SERIES '600KM–11' ALUM SLIDING GLASS DOOR (L.M.I.)

SIW Solutions, LLC.
975 S. CONGRESS AVE. #102
DELRAY BEACH, FL. 33445
TEL. (561) 274–9392 FAX. (561) 274–9262

revisions:

no	date	by	description
A	02.25.14		REV. PER RER COMMENTS
B	05.15.15		UPDATED TO 2014 FBC
C	02.22.16		NO CHANGE THIS SHEET
D	05.16.17		EDITORIAL CHANGES ONLY
E	12.05.18		COMPANY NAME REV.

date: 10–23–13
scale: –
dr. by: TARIQ
chk. by:

drawing no.
W13–56

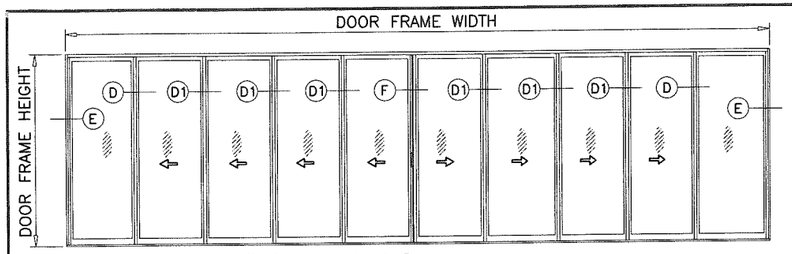

OXXXX–XXXXO

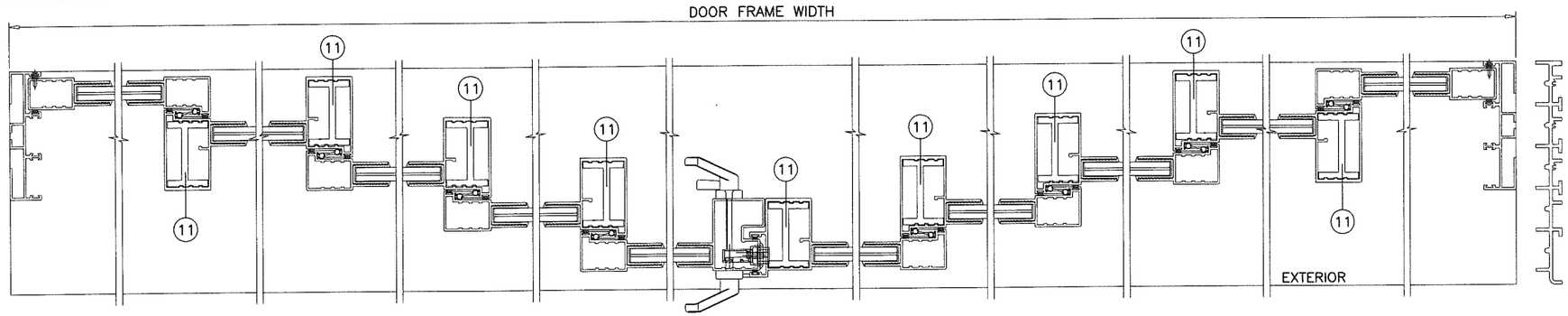

APPROVED CONFIGURATIONS
NON–POCKETED DOORS
FIVE (5) TRACKS

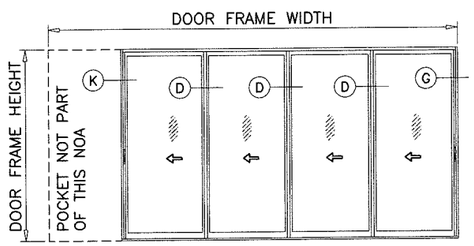

PXXXX (SHOWN)

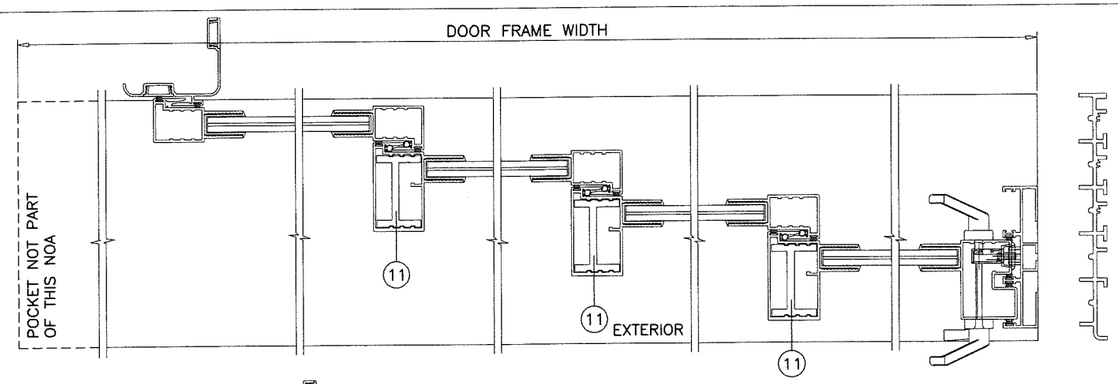

PRODUCT REVIEWED
as complying with the Florida
Building Code
Acceptance No. 19-0131.20
Expiration Date 8/31/22
By Ishay I. Lamb
Miami-Dade Product Control

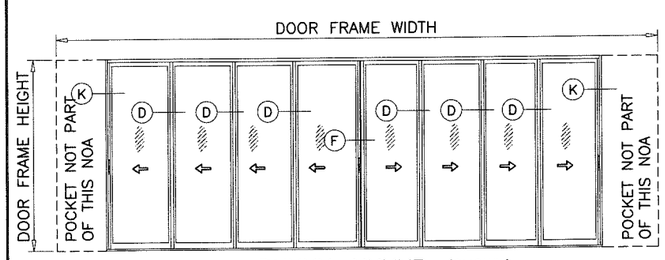

PXXXX–XXXXP (SHOWN)

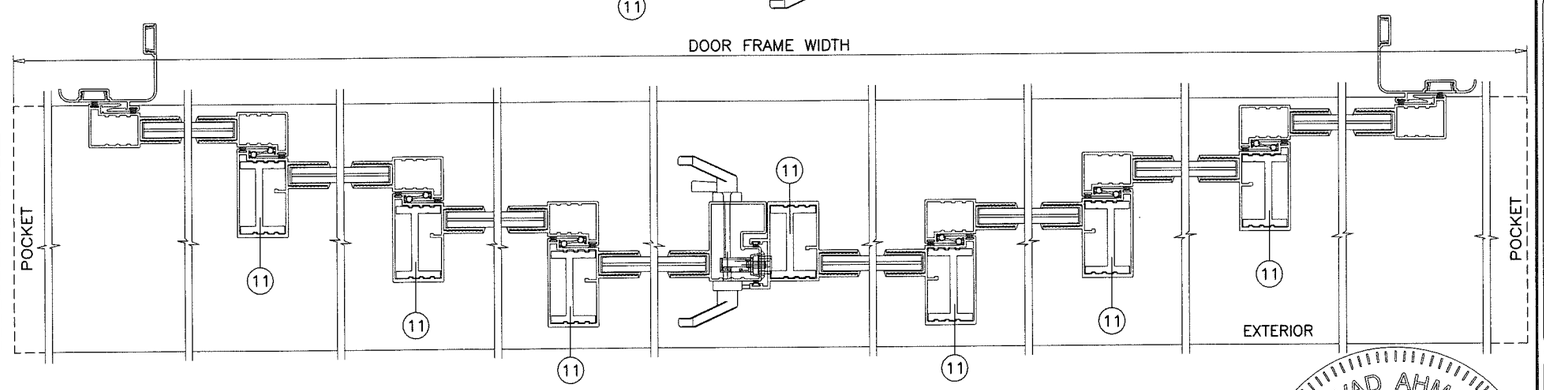

APPROVED CONFIGURATIONS
POCKETED DOORS
FIVE (5) TRACKS

NOTE:
CONFIGURATIONS SHOWN FOR ILLUSTRATION PURPOSE ONLY
(SEE APPLICABLE ANCHOR INSTALLATIONS IN SHEETS 10 THRU 14)
SEE APPLICABLE ELEVATION FOR ANCHOR LOCATION IN SHEETS 1 THRU 3.

THIS NOA ALLOWS ANY NUMBER OF PANELS ON 3, 4 OR 5 TRACK FRAMES WHERE TESTED STILE COMBINATIONS ARE PRESENT
MAX. NOMINAL PANEL WIDTH = 60–1/8"
MAX. DOOR HEIGHT = 132"
MAX. OVERALL DOOR FRAME AREA = 488 SQ. FT.
MAX. OVERALL FRAME WIDTH = 500"

JAVAD AHMAD
LICENSE
No. 70592
Jan 8,2019
STATE OF
FLORIDA
PROFESSIONAL ENGINEER

AL-FAROOQ CORPORATION
ENGINEERS & PRODUCT DEVELOPMENT
9360 SUNSET DRIVE, SUITE 220
MIAMI, FLORIDA 33173 (C.A.N. 3538)
TEL. (305) 264-8100 FAX. (305) 262-6978
COMP–ANL\W13–56SIW

SERIES '600KM–11' ALUM SLIDING GLASS DOOR (L.M.I.)

SIW Solutions, LLC.
975 S. CONGRESS AVE. #102
DELRAY BEACH, FL. 33445
TEL. (561) 274–9392 FAX. (561) 274–9262

revisions:

no	date	by	description
A	02.25.14		REV. PER RER COMMENTS
B	05.15.15		UPDATED TO 2014 FBC
C	02.22.16		NO CHANGE THIS SHEET
D	05.16.17		EDITORIAL CHANGES ONLY
E	12.05.18		COMPANY NAME REV.

date: 10–23–13
scale: –
dr. by: TARIQ
chk. by:

drawing no.
W13–56

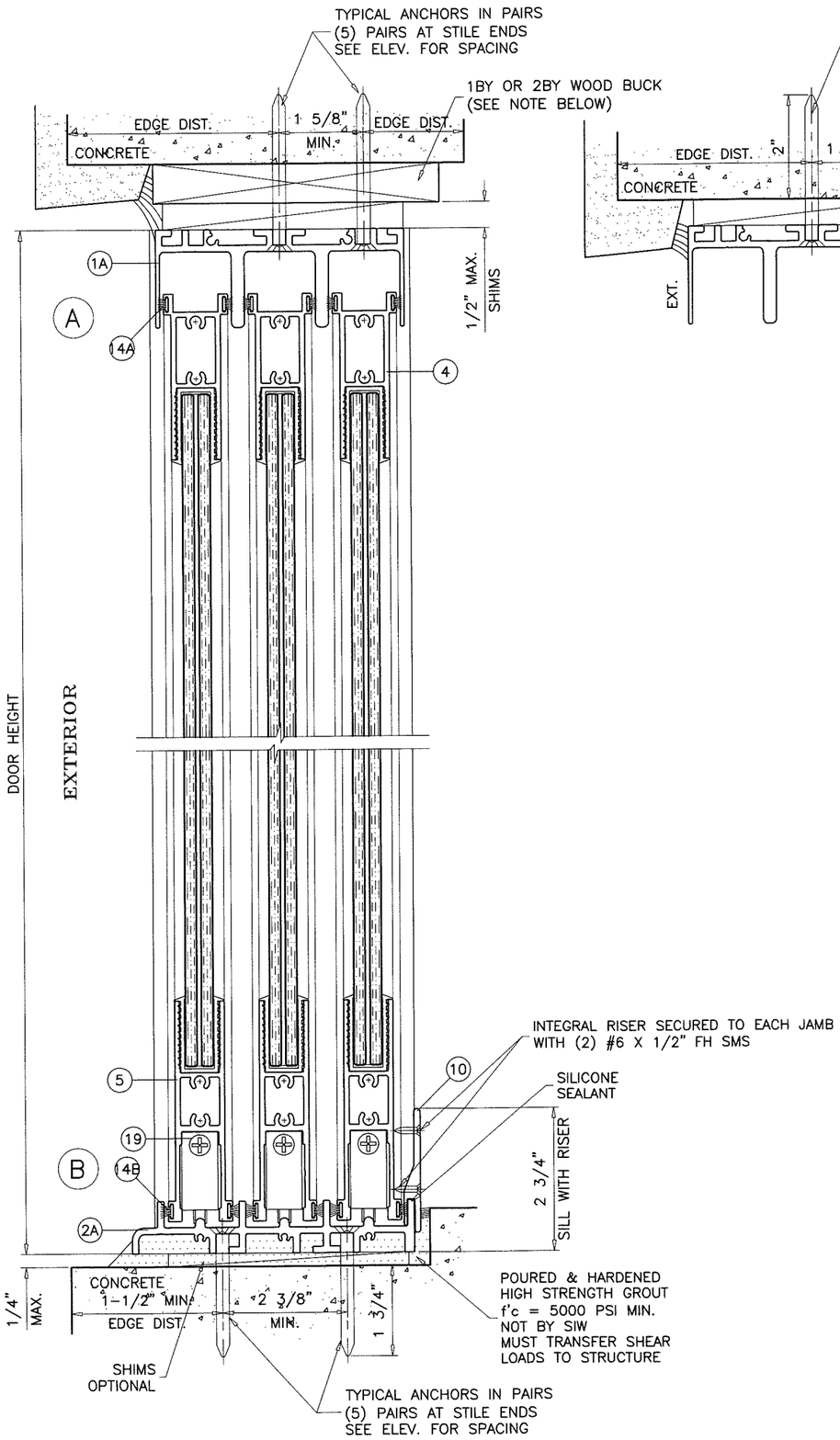

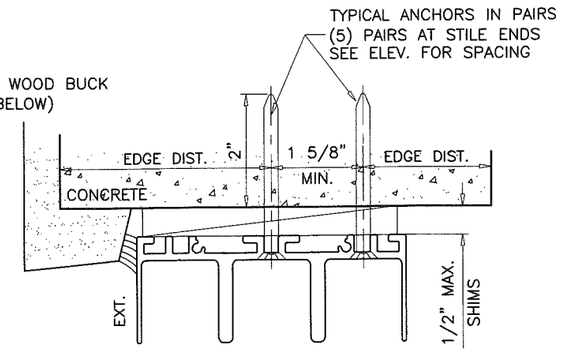

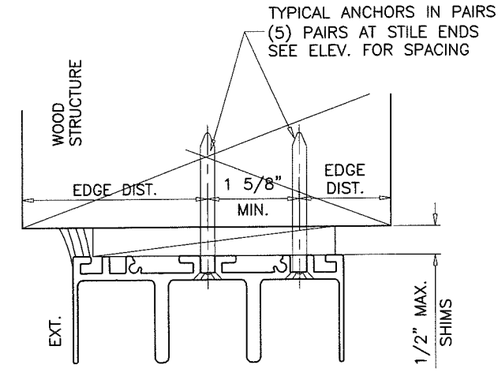

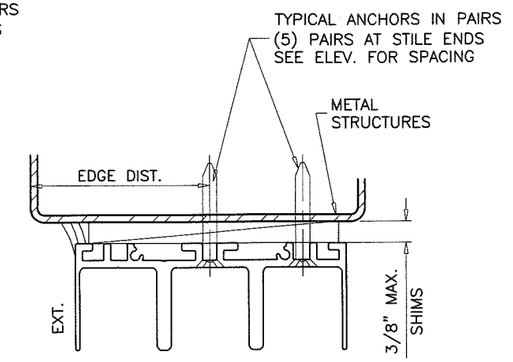

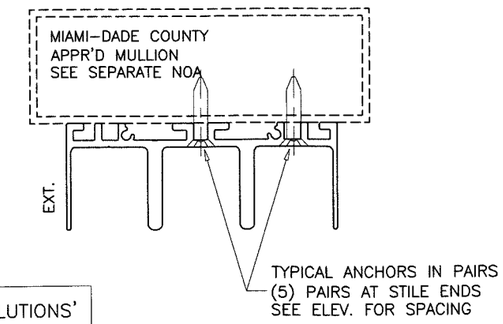

1BY OR 2BY WOOD BUCKS AND METAL STRUCTURE NOT BY 'SIW SOLUTIONS'
MUST SUSTAIN LOADS IMPOSED BY GLAZING SYSTEM
AND TRANSFER THEM TO THE BUILDING STRUCTURE.

TYPICAL ANCHORS: SEE ELEV. FOR SPACING

1/4" DIA. ULTRACON BY 'ELCO' (Fu=177 KSI, Fy=155 KSI)

INTO WOOD STRUCTURES
2" MIN. PENETRATION INTO WOOD (HEAD/JAMBS)

THRU 1BY OR 2BY BUCKS INTO CONC. OR MASONRY
1-3/8" MIN. EMBED INTO CONCRETE (HEAD)
1-1/4" MIN. EMBED INTO CONC. OR MASONRY (JAMBS)

DIRECTLY INTO CONC. OR MASONRY
2" MIN. EMBED INTO CONCRETE (HEAD/SILL)
2" MIN. EMBED INTO CONC. OR MASONRY (JAMBS)

1/4" DIA. TEKS OR SELF DRILLING SCREWS (GRADE 5 CRS)

INTO METAL STRUCTURES
STEEL : 1/8" THK. MIN. (Fy = 36 KSI MIN.)
ALUMINUM : 1/8" THK. MIN. (6063-T5 MIN.)
(STEEL IN CONTACT WITH ALUMINUM TO BE PLATED OR PAINTED)

#14 SMS OR SELF DRILLING SCREWS (GRADE 2 CRS)

INTO MIAMI-DADE COUNTY APPROVED MULLIONS (MIN. THK. = 1/8")
(NO SHIM SPACE)

TYPICAL EDGE DISTANCE

INTO CONCRETE AND MASONRY = 1" MIN. (EXCEPT AS NOTED)
INTO WOOD STRUCTURE = 1" MIN.
INTO METAL STRUCTURE = 3/4" MIN.

WOOD AT HEAD OR JAMBS SG = 0.55 MIN.
CONCRETE AT HEAD, SILL OR JAMBS f'c = 3000 PSI MIN.
C-90 HOLLOW/FILLED BLOCK AT JAMBS f'm = 2000 PSI MIN.

PRODUCT REVIEWED
as complying with the Florida
Building Code
Acceptance No. 19-0131.20
Expiration Date 8/31/22
By Ishaq J. Chanda
Miami-Dade Product Control

JAVAD AHMAD
LICENSE
No. 70592
Jan 8,2019
STATE OF
FLORIDA
PROFESSIONAL ENGINEER

AL-FAROOQ CORPORATION
ENGINEERS & PRODUCT DEVELOPMENT
9360 SUNSET DRIVE, SUITE 220
MIAMI, FLORIDA 33173
(C.A.N. 3538)
TEL. (305) 264-8100 FAX. (305) 262-6978
COMP-ANL\W13-56SIW

SERIES '600KM-11' ALUM SLIDING GLASS DOOR (L.M.I.)

SIW Solutions, LLC.
975 S. CONGRESS AVE. #102
DELRAY BEACH, FL. 33445
TEL. (561) 274-9392 FAX. (561) 274-9262

revisions:

no	date	by	description
A	02.25.14		REV. PER RER COMMENTS
B	05.15.15		UPDATED TO 2014 FBC
C	02.22.16		REV. PER RER COMMENTS
D	05.16.17		EDITORIAL CHANGES ONLY
E	12.05.18		COMPANY NAME REV.

date: 10-23-13
scale: 3/8" = 1"
dr. by: TARIQ
chk. by:

drawing no.
W13-56

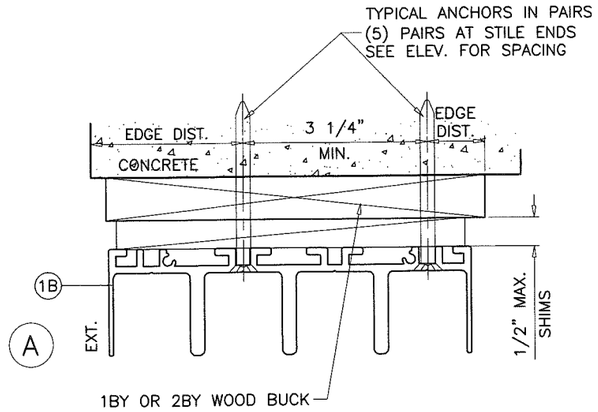

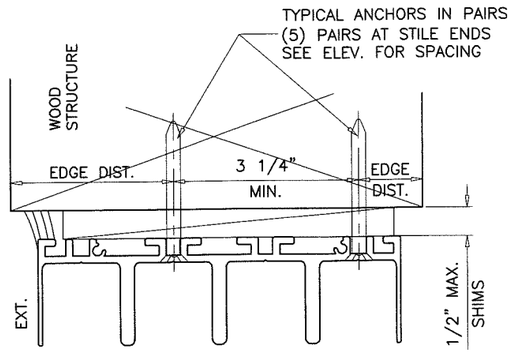

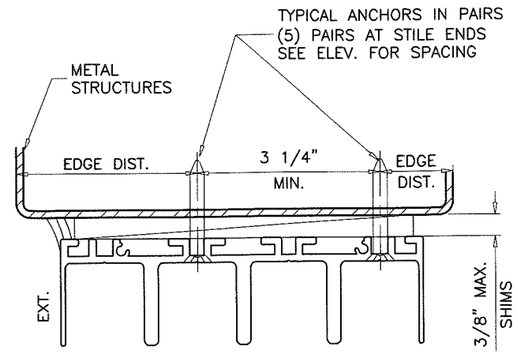

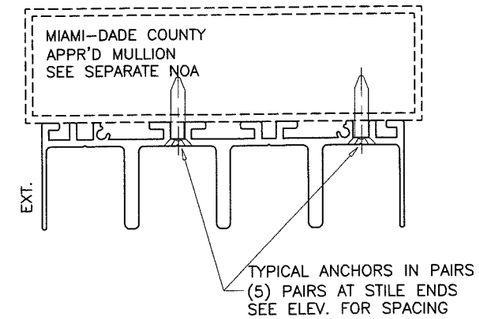

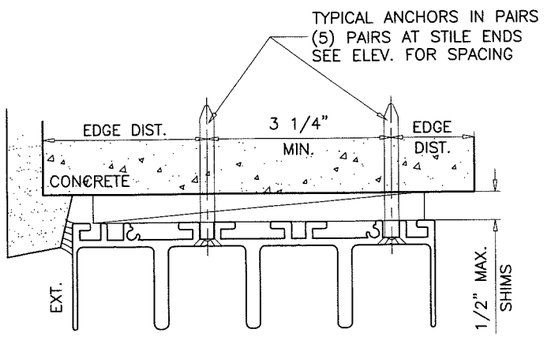

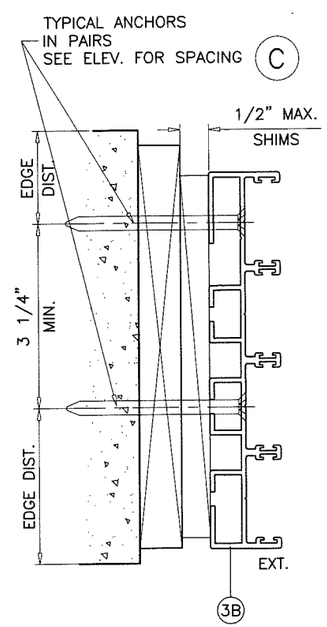

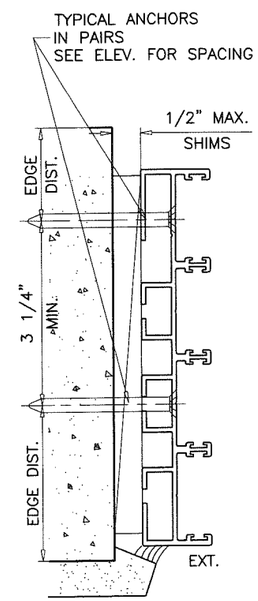

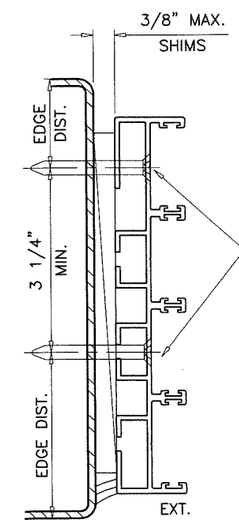

PRODUCT REVIEWED
as complying with the Florida
Building Code
Acceptance No. 19-0131.20
Expiration Date 8/31/22
By Shang J. Chang
Miami-Dade/Product Control

4 TRACK FRAMES
ANCHOR LOCATIONS

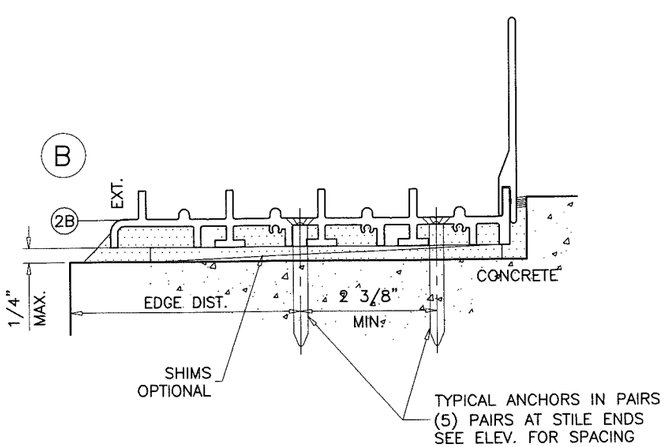

JAVAD AHMAD
LICENSE
No. 70592
Jan 8,2019
STATE OF FLORIDA
PROFESSIONAL ENGINEER

AL-FAROOQ CORPORATION
ENGINEERS & PRODUCT DEVELOPMENT
9360 SUNSET DRIVE, SUITE 220
MIAMI, FLORIDA 33173 (C.A.N. 3538)
TEL. (305) 264-8100 FAX. (305) 262-6978
COMP-ANL\W13-56SIW

SERIES '600KM-11' ALUM SLIDING GLASS DOOR (L.M.I.)

SIW Solutions, LLC.
975 S. CONGRESS AVE. #102
DELRAY BEACH, FL. 33445
TEL. (561) 274-9392 FAX. (561) 274-9262

revisions:

no	date	by	description
A	02.25.14		REV. PER RER COMMENTS
B	05.15.15		UPDATED TO 2014 FBC
C	02.22.16		REV. PER RER COMMENTS
D	05.16.17		EDITORIAL CHANGES ONLY
E	12.05.18		COMPANY NAME REV.

date: 10-23-13
scale: 3/8" = 1"
dr. by: TARIQ
chk. by:

drawing no.
W13-56

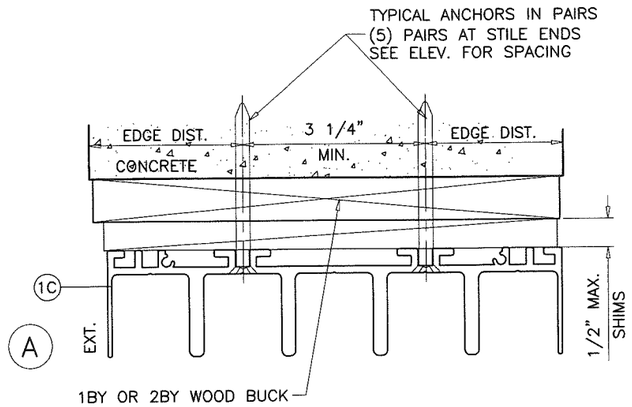

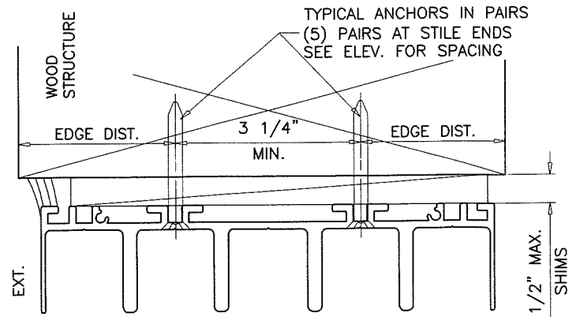

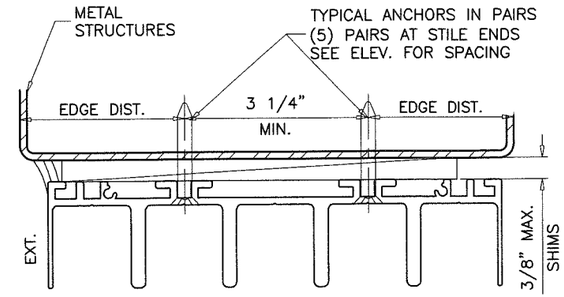

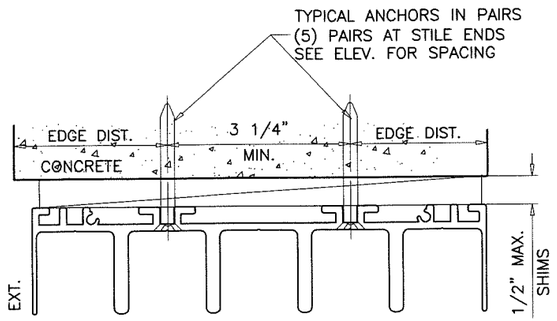

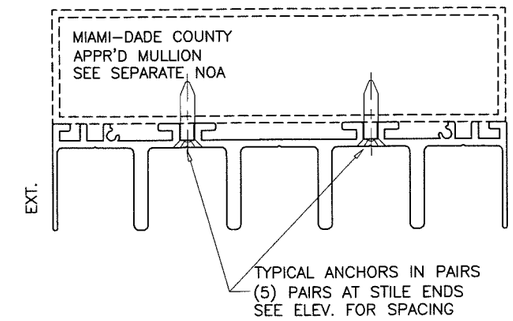

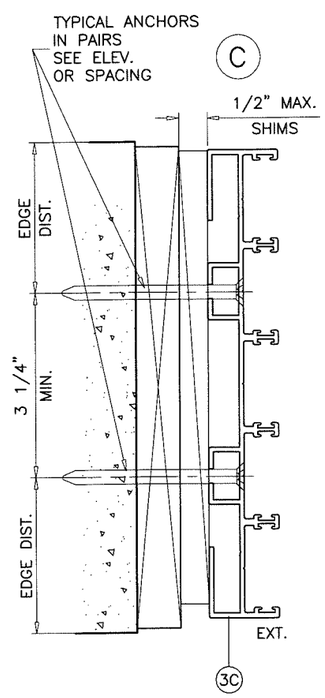

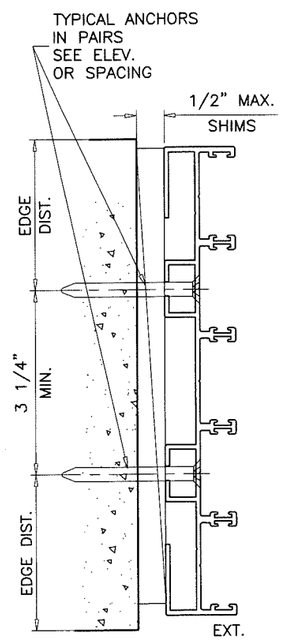

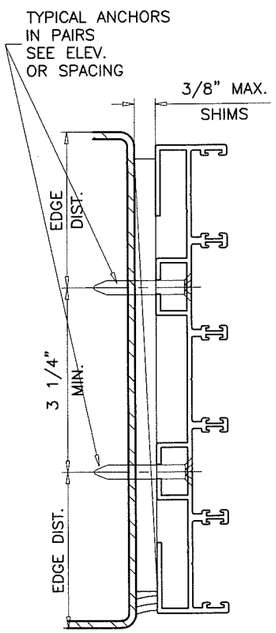

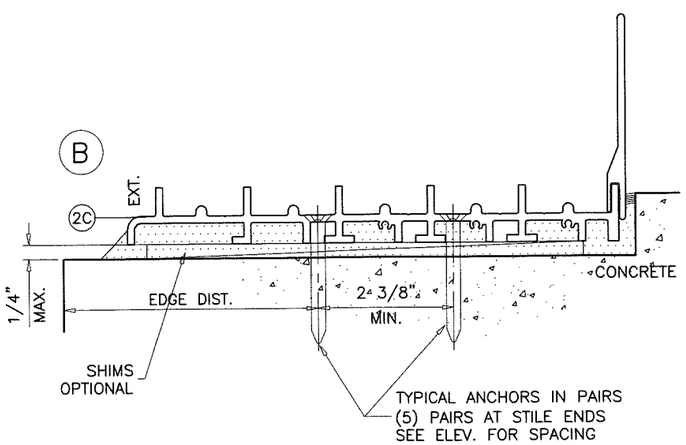

PRODUCT REVISED
in complying with the Florida
Building Code
Acceptance No. 19-0131.20
Expiration Date 8/31/22
By Ishan L. Chanda
Mr. Bldg Product Control

5 TRACK FRAMES
ANCHOR LOCATIONS

TARIQ AHMAD
LICENSE
No. 70592
Jan 8,2019
STATE OF
FLORIDA
PROFESSIONAL ENGINEER

AL-FAROOQ CORPORATION
ENGINEERS & PRODUCT DEVELOPMENT
9360 SUNSET DRIVE, SUITE 220
MIAMI, FLORIDA 33173 (C.A.N. 3538)
TEL. (305) 264-8100 FAX. (305) 262-6978

COMP-ANL\W13-56SIW

SERIES '600KM-11' ALUM SLIDING GLASS DOOR (L.M.I.)

SIW Solutions, LLC.
975 S. CONGRESS AVE. #102
DELRAY BEACH, FL. 33445
TEL. (561) 274-9392 FAX. (561) 274-9262

revisions:

no	date	by	description
A	02.25.14		REV. PER RER COMMENTS
B	05.15.15		UPDATED TO 2014 FBC
C	02.22.16		REV. PER RER COMMENTS
D	05.16.17		EDITORIAL CHANGES ONLY
E	12.05.18		COMPANY NAME REV.

date: 10-23-13
scale: 3/8" = 1"
dr. by: TARIQ
chk. by:

drawing no.
W13-56

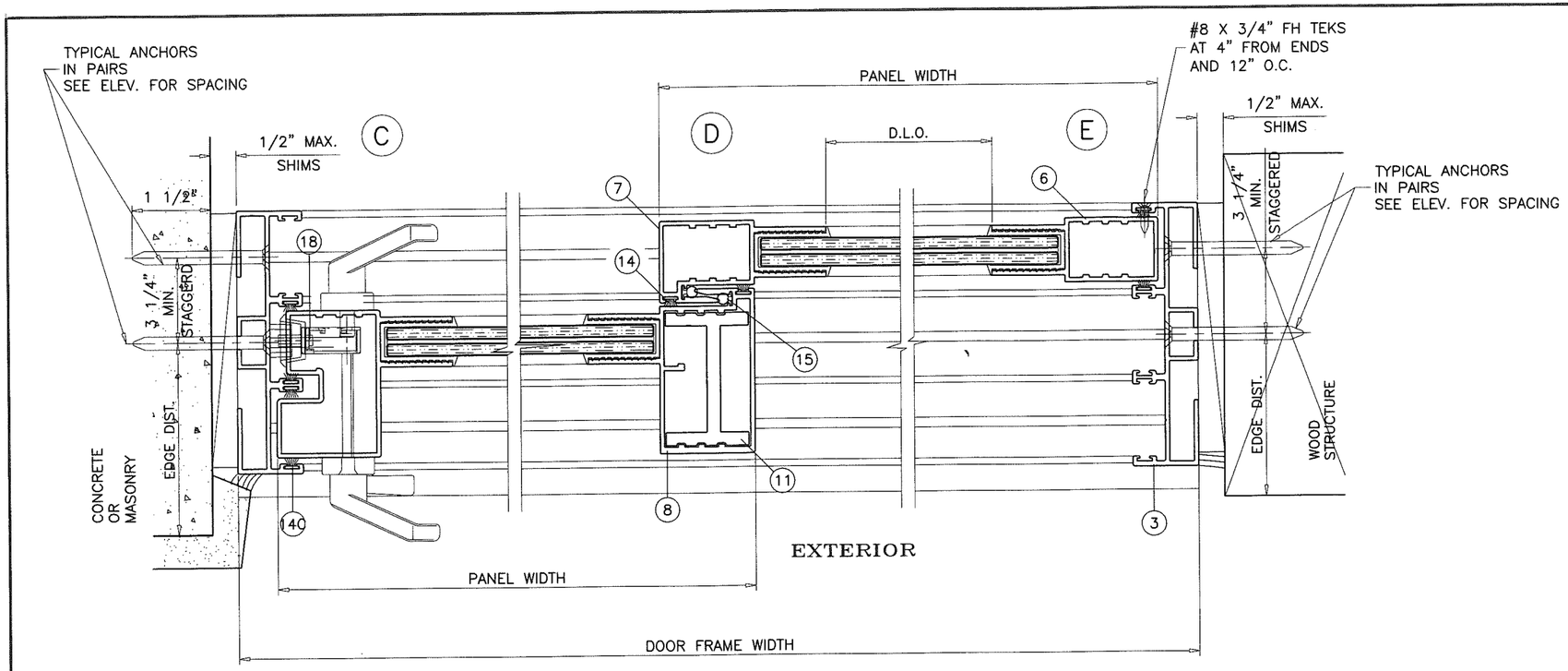

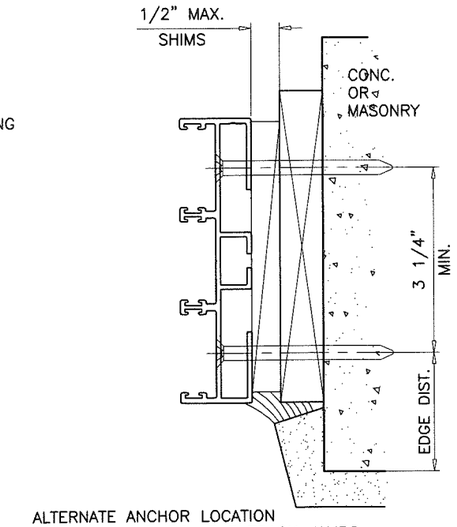

ALTERNATE ANCHOR LOCATION
FOR IN-LINE PAIRS AT 3 TRACK JAMBS
APPLICABLE AT ALL SUBSTRATES

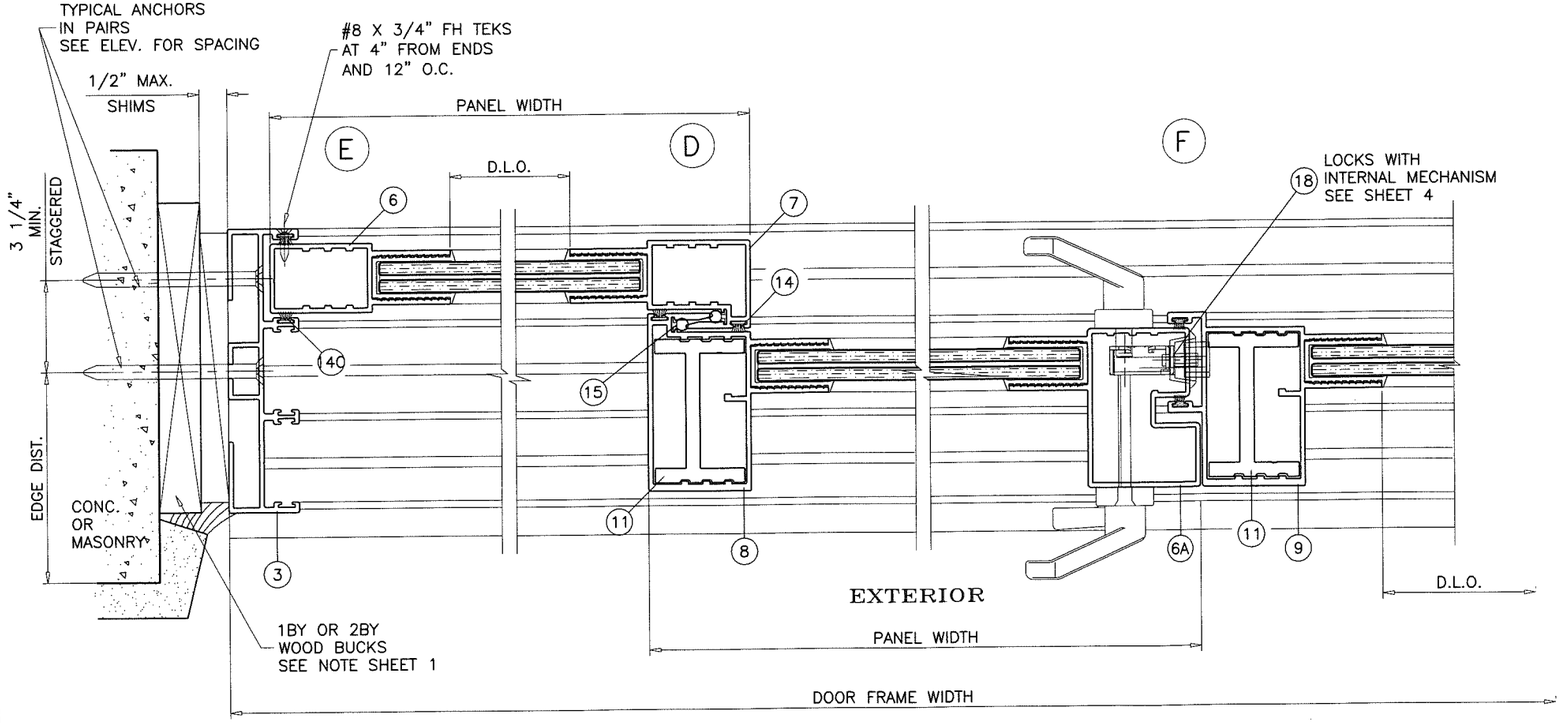

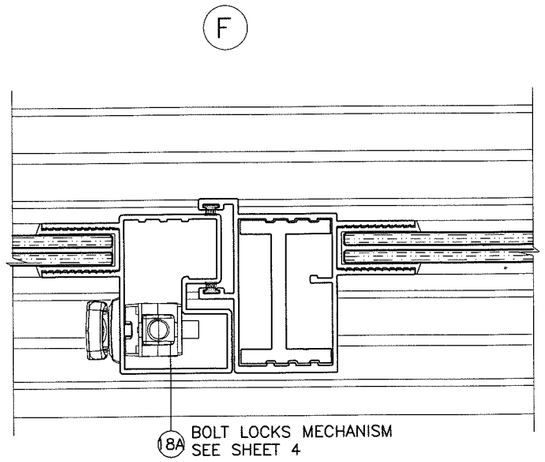

PRODUCT REVISED
as complying with the Florida
Building Code
Acceptance No. 19-0131.20
Expiration Date 8/31/22
By Ishwar L. Chandra
Miami-Dade Product Control

JAVAD AHMAD
LICENSE
No. 70592
Jan 8,2019
STATE OF
FLORIDA
PROFESSIONAL ENGINEER

AL-FAROOQ CORPORATION
ENGINEERS & PRODUCT DEVELOPMENT
9360 SUNSET DRIVE, SUITE 220
MIAMI, FLORIDA 33173 (C.A.N. 3538)
TEL. (305) 264-8100 FAX. (305) 262-6978
COMP-ANL\W13-56SIW

SERIES '600KM-11' ALUM SLIDING GLASS DOOR (L.M.I.)

SIW Solutions, LLC.
975 S. CONGRESS AVE. #102
DELRAY BEACH, FL. 33445
TEL. (561) 274-9392 FAX. (561) 274-9262

revisions:

no	date	by	description
A	02.25.14		REV. PER RER COMMENTS
B	05.15.15		UPDATED TO 2014 FBC
C	02.22.16		REV. PER RER COMMENTS
D	05.16.17		EDITORIAL CHANGES ONLY
E	12.05.18		COMPANY NAME REV.

date: 10-23-13
scale: 3/8" = 1"
dr. by: TARIQ
chk. by:

drawing no.
W13-56

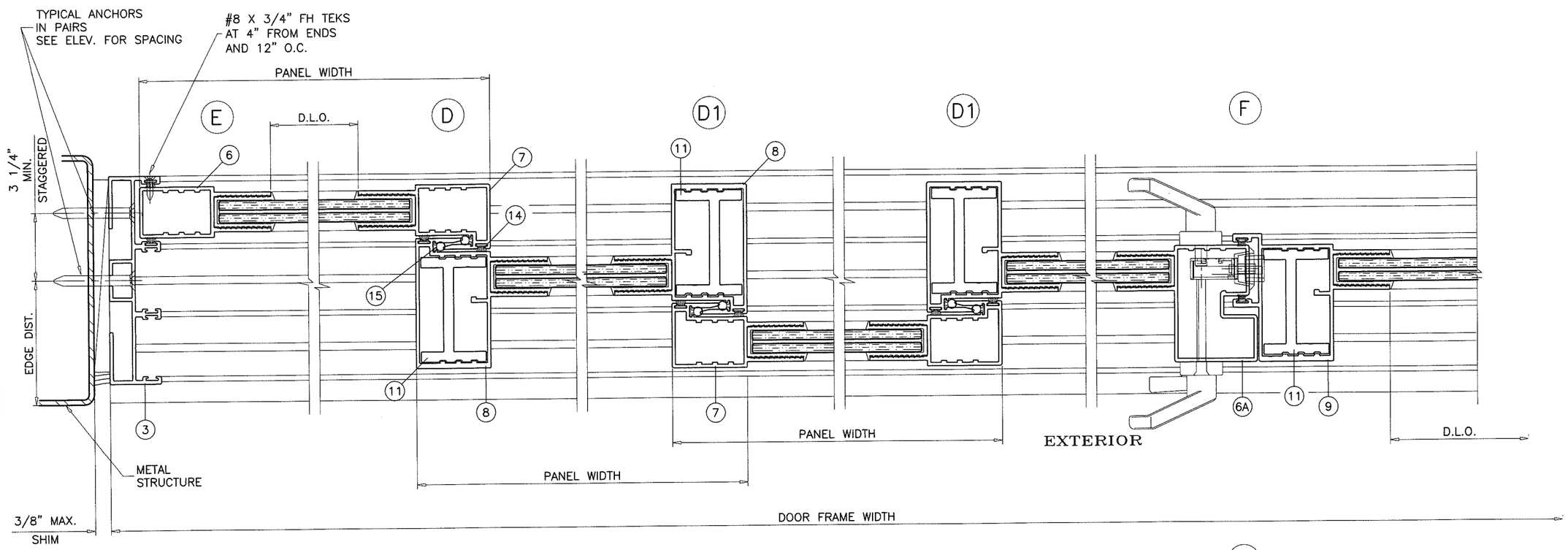

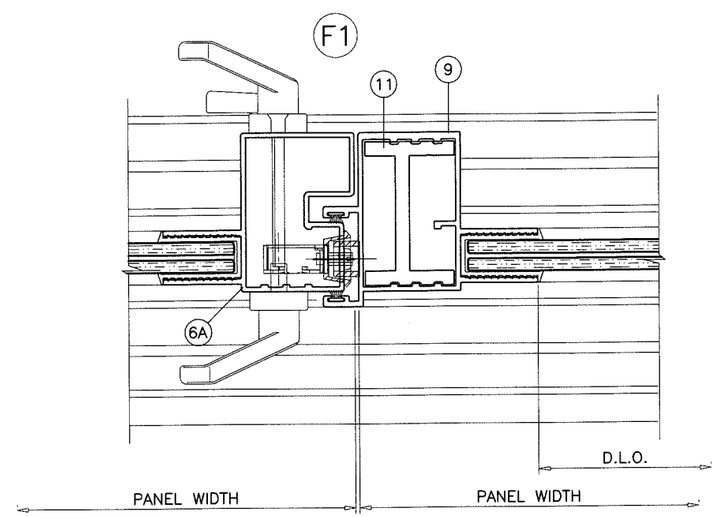

PRODUCT REVISED
In complying with the Florida
Building Code
Acceptance No. 14-0131.20
Expiration Date 8/31/22
By Ishwar J. Chandra
Miami-Dade Product Control

JAVAD AHMAD
LICENSE
No. 70592
Jan 8,2019
STATE OF
FLORIDA
PROFESSIONAL ENGINEER

AL-FAROOQ CORPORATION
ENGINEERS & PRODUCT DEVELOPMENT
9360 SUNSET DRIVE, SUITE 220
MIAMI, FLORIDA 33173 (C.A.N. 3538)
TEL. (305) 264-8100 FAX. (305) 262-6978
COMP-ANL\W13-56SIW

SERIES '600KM-11' ALUM SLIDING GLASS DOOR (L.M.I.)

SIW Solutions, LLC.
975 S. CONGRESS AVE. #102
DELRAY BEACH, FL. 33445
TEL. (561) 274-9392 FAX. (561) 274-9262

revisions:

no	date	by	description
A	02.25.14		REV. PER RER COMMENTS
B	05.15.15		UPDATED TO 2014 FBC
C	02.22.16		NO CHANGE THIS SHEET
D	05.16.17		EDITORIAL CHANGES ONLY
E	12.05.18		COMPANY NAME REV.

date: 10-23-13
scale: 3/8" = 1"
dr. by: TARIQ
chk. by:

drawing no.
W13-56

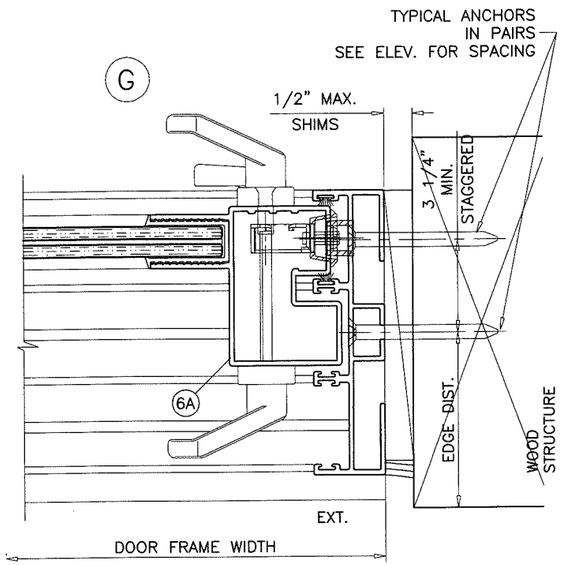

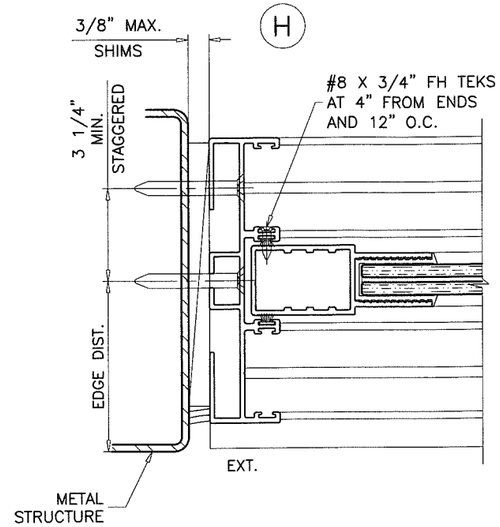

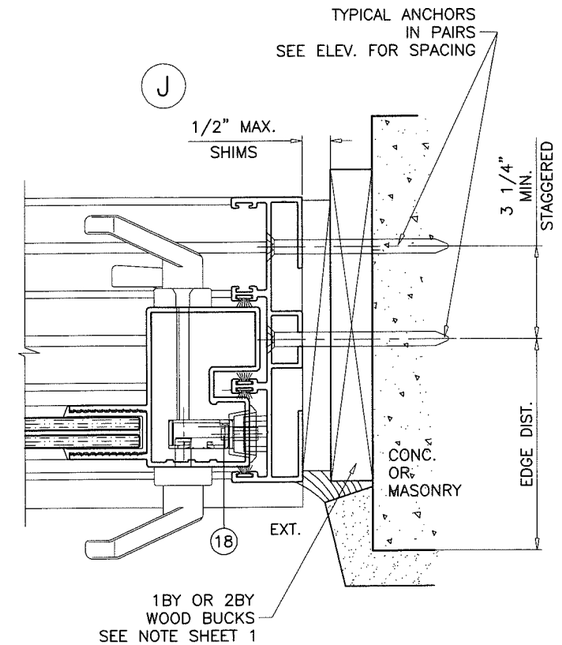

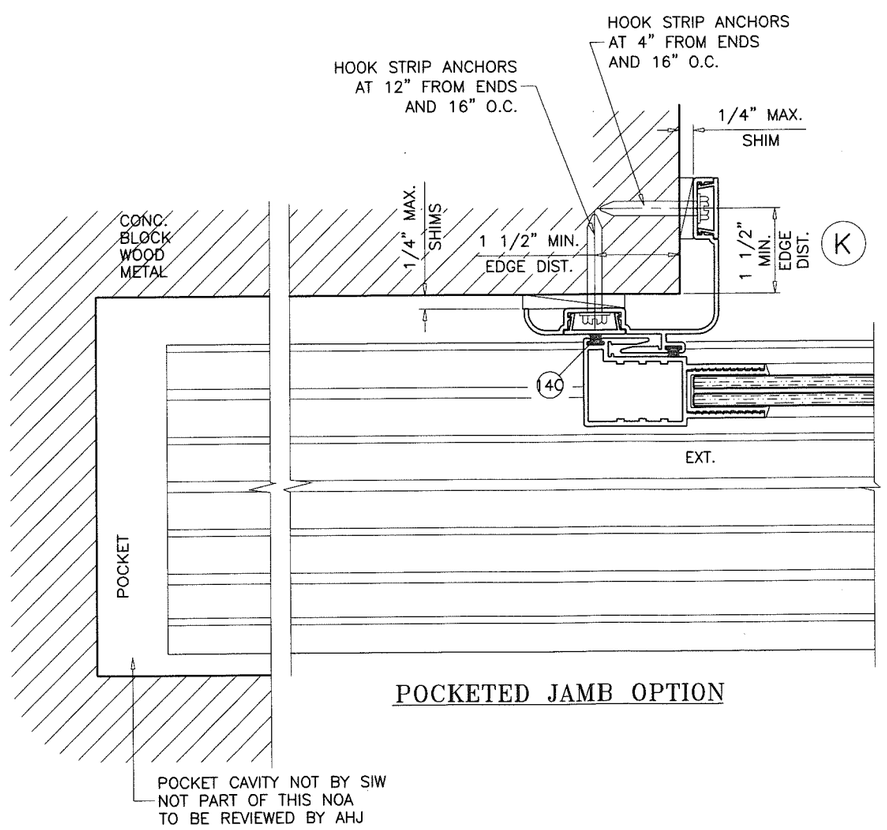

POCKETED JAMB OPTION

HOOK STRIP ANCHORS:

1/4" DIA. ULTRACON BY 'ELCO' (Fu=177 KSI, Fy=155 KSI)

INTO WOOD STRUCTURES
2" MIN. PENETRATION INTO WOOD

DIRECTLY INTO CONC. OR MASONRY
1-1/4" MIN. EMBED INTO CONC. OR MASONRY

1/4" DIA. SELF DRILLING SCREWS (GRADE 5 CRS)
INTO METAL STRUCTURES, 1/8" MIN. THK.
(MINIMUM 3 THREADS TO EXTEND BEYOND METAL THICKNESS)

PRODUCT REVISED
as complying with the Florida
Building Code
Acceptance No. 19-0131.20
Expiration Date 8/31/22
By Ishaq I. Ahmad
Miami-Dade Product Control

AVAD AHMAD
LICENSE
No. 70592
Jan 8,2019
STATE OF
FLORIDA
PROFESSIONAL ENGINEER

AL-FAROOQ CORPORATION
ENGINEERS & PRODUCT DEVELOPMENT
9360 SUNSET DRIVE, SUITE 220
MIAMI, FLORIDA 33173 (C.A.N. 3538)
TEL. (305) 264-8100 FAX. (305) 262-6978
COMP-ANL\W13-56SIW

SERIES '600KM-11' ALUM SLIDING GLASS DOOR (L.M.I.)

SIW Solutions, LLC.
975 S. CONGRESS AVE. #102
DELRAY BEACH, FL. 33445
TEL. (561) 274-9392 FAX. (561) 274-9262

revisions:

no	date	by	description
A	02.25.14		NO CHANGE THIS SHEET
B	05.15.15		UPDATED TO 2014 FBC
C	02.22.16		REV. PER RER COMMENTS
D	05.16.17		EDITORIAL CHANGES ONLY
E	12.05.18		COMPANY NAME REV.

date: 10-23-13
scale: 3/8" = 1"
dr. by: TARIQ
chk. by:

drawing no.
W13-56

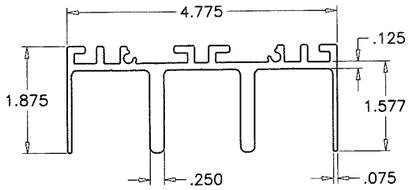

(1A) 3 TRACK FRAME HEAD

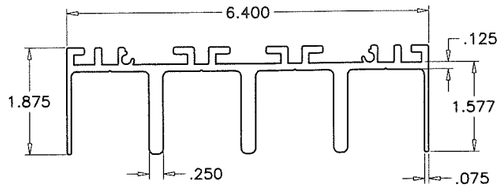

(1B) 4 TRACK FRAME HEAD

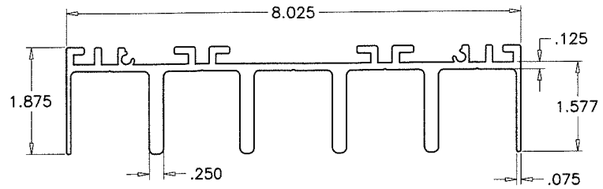

(1C) 5 TRACK FRAME HEAD

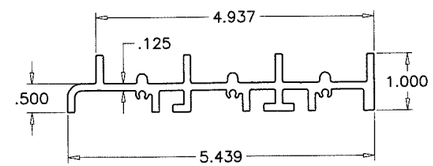

(2A) 3 TRACK FRAME SILL

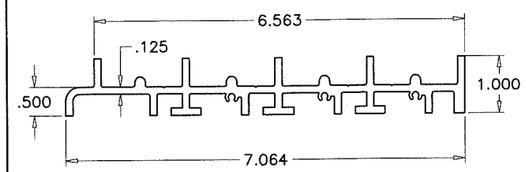

(2B) 4 TRACK FRAME SILL

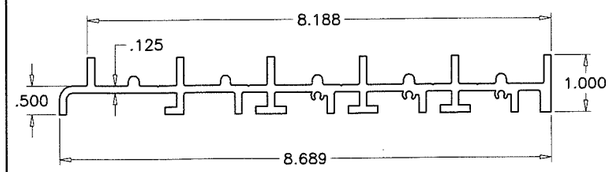

(2C) 5 TRACK FRAME SILL

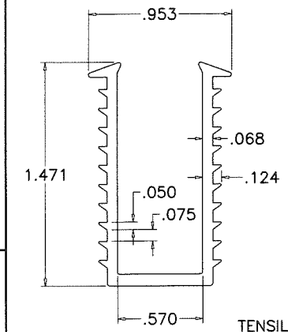

HARDNESS = 73 SHORE A
TENSILE STRENGTH (100% STRAIN)= 406 PSI
TENSILE STRENGTH (BREAK)= 1058 PSI
ELONGATION AT BREAK = 460%
SPECIFIC GRAVITY = 0.98

GLAZING GASKET
SANTOPRENE
EXTRUDED BY 'CENTRAL PLASTICS'
SCALE 1:1

(13)

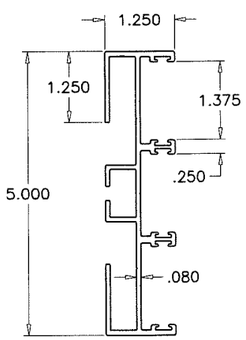

(3A) 3 TRACK FRAME JAMB

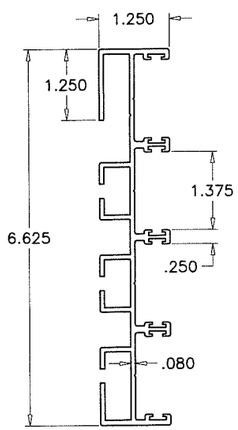

(3B) 4 TRACK FRAME JAMB

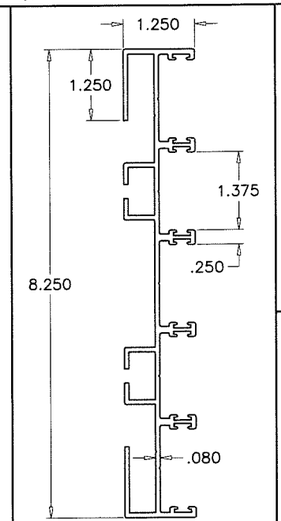

(3C) 5 TRACK FRAME JAMB

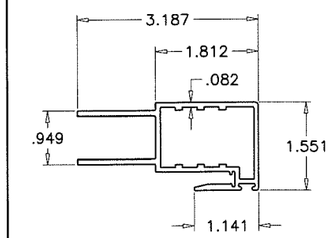

(7) STD. INTERLOCK STILE

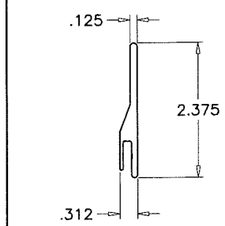

(10) 2-3/4" SILL ADAPTER

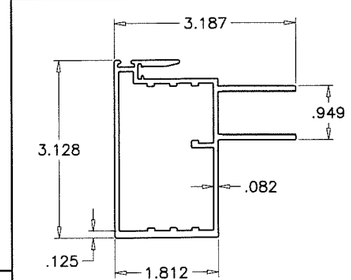

(8) H.D. INTERLOCK STILE

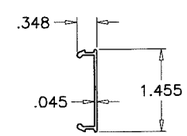

(12) JAMB ANCHOR COVER

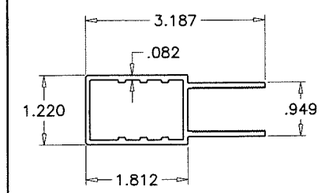

(6) JAMB/LOCK STILE

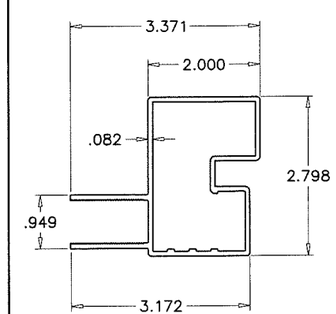

(6A) H.D. LOCK STILE

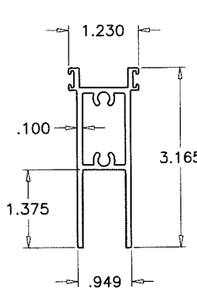

(4) PANEL TOP RAIL

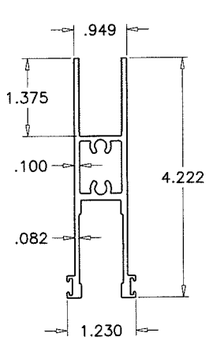

(5) PANEL BOTTOM RAIL

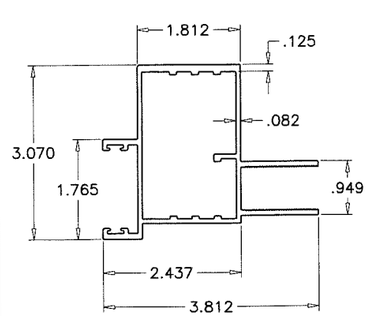

(9) FEMALE ASTRAGAL

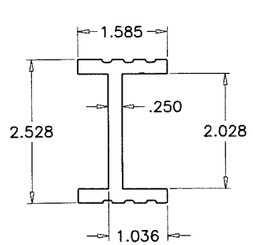

(11) REINFORCEMENT

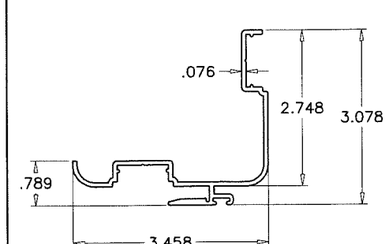

(23) HOOK STRIP

PRODUCT REVISED
as complying with the Florida
Building Code
Acceptance No. 19-0131.20
Expiration Date 8/31/22
By Ichang J. Chank
Miami-Dade Product Control

JAVAD AHMAD
LICENSE
No. 70592
Jan 8,2019
STATE OF FLORIDA
PROFESSIONAL ENGINEER

AL-FAROOQ CORPORATION
ENGINEERS & PRODUCT DEVELOPMENT
9360 SUNSET DRIVE, SUITE 220
MIAMI, FLORIDA 33173 (C.A.N. 3538)
TEL. (305) 264-8100 FAX. (305) 262-6978

COMP-ANL\W13-56SIW

SERIES '600KM-11' ALUM SLIDING GLASS DOOR (L.M.I.)

SIW Solutions, LLC.
975 S. CONGRESS AVE. #102
DELRAY BEACH, FL. 33445
TEL. (561) 274-9392 FAX. (561) 274-9262

revisions:

no	date	by	description
A	02.25.14		REV. PER RER COMMENTS
B	05.15.15		UPDATED TO 2014 FBC
C	02.22.16		NO CHANGE THIS SHEET
D	05.16.17		EDITORIAL CHANGES ONLY
E	12.05.18		COMPANY NAME REV.

date: 10-23-13
scale: 3/8" = 1"
dr. by: TARIQ
chk. by:

drawing no.
W13-56

SEALANT:

ALL JOINTS AND FRAME CONNECTIONS SEALED WITH CRL SMALL JOINT SEALER.
LOCKING HARDWARE SEALED WITH CLEAR SILICONE.

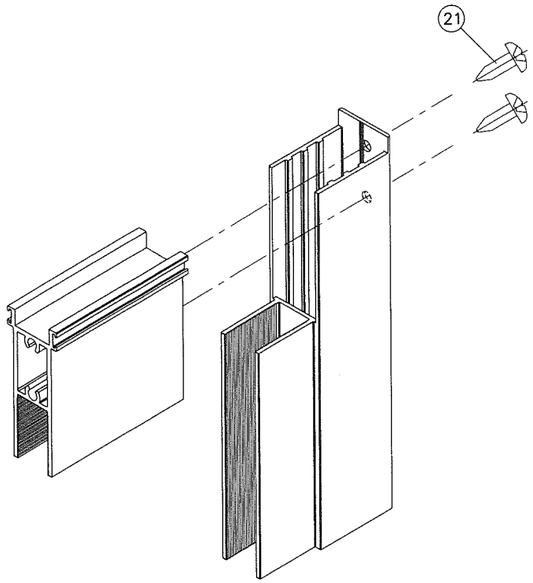

PANEL TOP CORNER

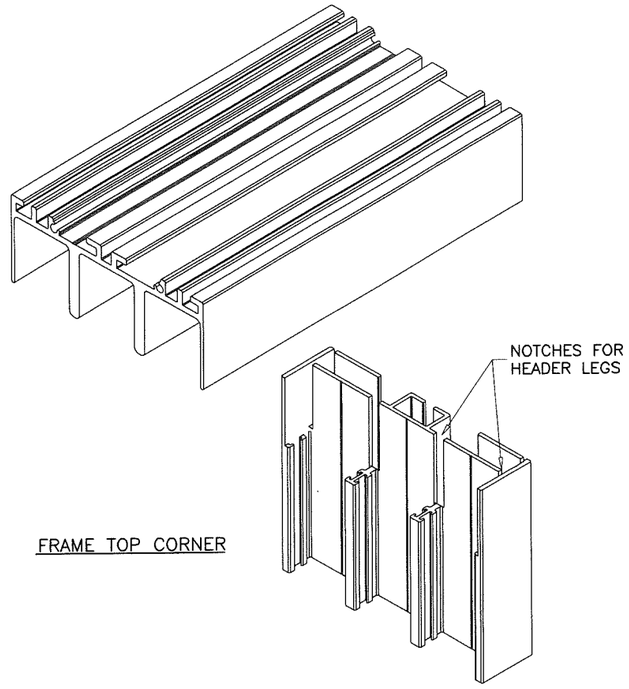

FRAME TOP CORNER

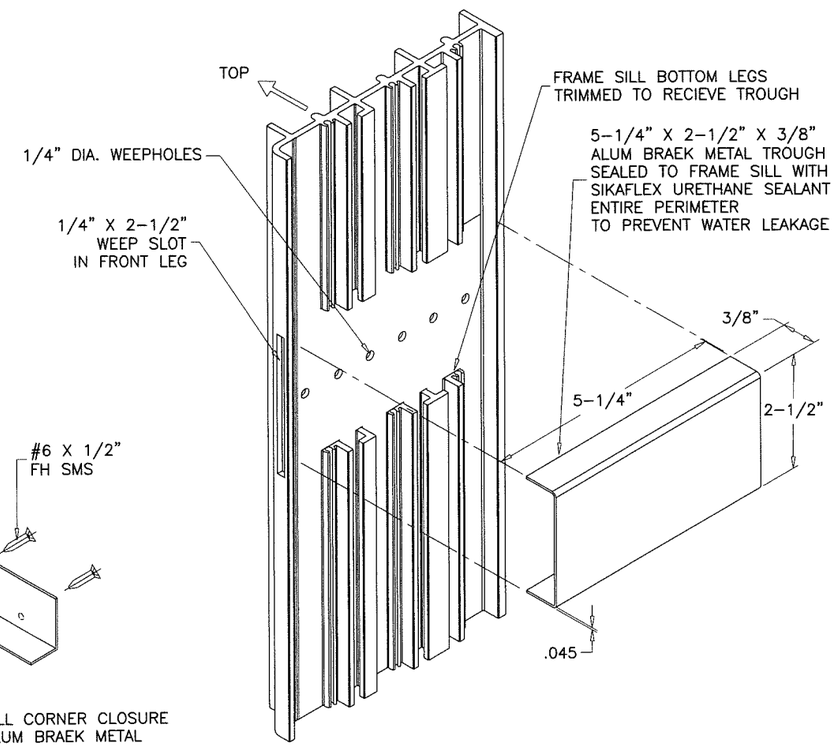

FRAME SILL BOTTOM VIEW
TROUGH REQD. AT CENTER OF EACH PANEL
SILL ROTATED 90° TO SHOW WEEP DETAILS

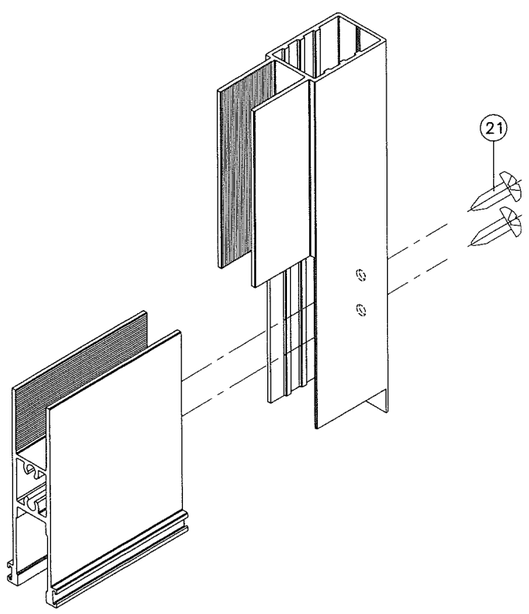

PANEL BOTTOM CORNER

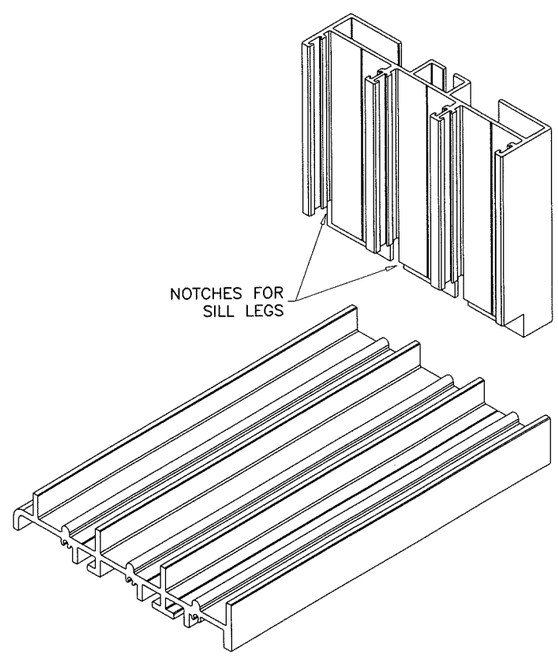

FRAME BOTTOM CORNER

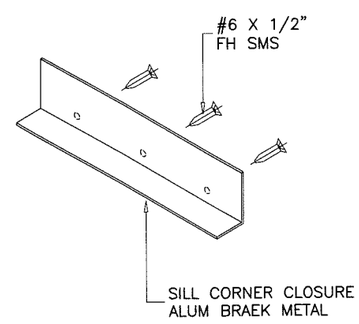

PRODUCT REVISED
as complying with the Florida
building Code
Acceptance No 19-0131.20
Expiration Date 8/31/2022
By Ishwar V. Chauhan
Miami-Dade Product Control

JAMAD AHMAD
LICENSE
No. 70592
Jan 8,2019
STATE OF
FLORIDA
PROFESSIONAL ENGINEER

AL-FAROOQ CORPORATION
ENGINEERS & PRODUCT DEVELOPMENT
9360 SUNSET DRIVE, SUITE 220
MIAMI, FLORIDA 33173 (C.A.N. 3538)
TEL. (305) 264-8100 FAX. (305) 262-6978
COMP-ANL\W13-56SIW

SERIES '600KM-11' ALUM SLIDING GLASS DOOR (L.M.I.)

SIW Solutions, LLC.
975 S. CONGRESS AVE. #102
DELRAY BEACH, FL. 33445
TEL. (561) 274-9392 FAX. (561) 274-9262

revisions:

no	date	by	description
A	02.25.14		NO CHANGE THIS SHEET
B	05.15.15		UPDATED TO 2014 FBC
C	02.22.16		NO CHANGE THIS SHEET
D	05.16.17		EDITORIAL CHANGES ONLY
E	12.05.18		COMPANY NAME REV.

date: 10-23-13
scale: 3/8" = 1"
dr. by: TARIQ
chk. by:

drawing no.
W13-56