MIAMI-DADE COUNTY
DEPARTMENT OF REGULATORY AND ECONOMIC RESOURCES (RER)
BOARD AND CODE ADMINISTRATION DIVISION

MIAMI-DADE COUNTY
PRODUCT CONTROL SECTION
11805 SW 26 Street, Room 208
T (786) 315-2590 F (786) 315-2599
www.miamidade.gov/economy

NOTICE OF ACCEPTANCE (NOA)

General Impact Glass & Windows, Corp.
290 West 78th Road
Hialeah, FL 33014

SCOPE:
This NOA is being issued under the applicable rules and regulations governing the use of construction materials. The documentation submitted has been reviewed and accepted by Miami-Dade County RER - Product Control Section to be used in Miami Dade County and other areas where allowed by the Authority Having Jurisdiction (AHJ).

This NOA shall not be valid after the expiration date stated below. The Miami-Dade County Product Control Section (In Miami Dade County) and/or the AHJ (in areas other than Miami Dade County) reserve the right to have this product or material tested for quality assurance purposes. If this product or material fails to perform in the accepted manner, the manufacturer will incur the expense of such testing and the AHJ may immediately revoke, modify, or suspend the use of such product or material within their jurisdiction. RER reserves the right to revoke this acceptance, if it is determined by Miami-Dade County Product Control Section that this product or material fails to meet the requirements of the applicable building code.
This product is approved as described herein, and has been designed to comply with the Florida Building Code, including the High Velocity Hurricane Zone.

DESCRIPTION: Series "18000 High Impact" Aluminum Horizontal Sliding Window – L.M.I.

APPROVAL DOCUMENT: Drawing No. **17-150**, titled "Series 18000 High Impact Horizontal Sliding Window - Large Missile Impact Resistant", sheets 1 through 14 of 14, dated 08/08/17, with revision #1 dated 08/08/17, prepared by Tilteco, Inc., signed and sealed by Walter A. Tillit, Jr., P.E., bearing the Miami-Dade County Product Control Renewal stamp with the Notice of Acceptance number and expiration date by the Miami-Dade County Product Control Section.

MISSILE IMPACT RATING: Large and Small Missile Impact Resistant.

LABELING: Each unit shall bear a permanent label with the manufacturer's name or logo, city, state, model/series, and following statement: "Miami-Dade County Product Control Approved", unless otherwise noted herein.

RENEWAL of this NOA shall be considered after a renewal application has been filed and there has been no change in the applicable building code negatively affecting the performance of this product.

TERMINATION of this NOA will occur after the expiration date or if there has been a revision or change in the materials, use, and/or manufacture of the product or process. Misuse of this NOA as an endorsement of any product, for sales, advertising or any other purposes shall automatically terminate this NOA. Failure to comply with any section of this NOA shall be cause for termination and removal of NOA.

ADVERTISEMENT: The NOA number preceded by the words Miami-Dade County, Florida, and followed by the expiration date may be displayed in advertising literature. If any portion of the NOA is displayed, then it shall be done in its entirety.

INSPECTION: A copy of this entire NOA shall be provided to the user by the manufacturer or its distributors and shall be available for inspection at the job site at the request of the Building Official.

This NOA **renews NOA# 17-1102.11** and consists of this page 1 and evidence pages E-1 and E-2, as well as approval document mentioned above.
The submitted documentation was reviewed by **Sifang Zhao, P.E.**

MIAMI-DADE COUNTY APPROVED

S.Z.
10/03/2019

NOA No. 19-0911.06
Expiration Date: 10/21/2024
Approval Date: 10/03/2019

General Impact Glass & Windows, Corp.

NOTICE OF ACCEPTANCE: EVIDENCE SUBMITTED

1. EVIDENCE SUBMITTED UNDER PREVIOUS NOA'S

A. DRAWINGS

1. Manufacturer's die drawings and sections. ***(Submitted under NOA#09-0806.03)***
2. Drawing No. **17-150**, titled "Series 18000 High Impact Horizontal Sliding Window - Large Missile Impact Resistant", sheets 1 through 14 of 14, dated 08/08/17, with revision #1 dated 08/08/17, prepared by Tilteco, Inc., signed and sealed by Walter A. Tillit, Jr., P.E.

B. TESTS

1. Test reports on: 1) Air Infiltration Test, per FBC, TAS 202-94
   2) Uniform Static Air Pressure Test, Loading per FBC TAS 202-94
   3) Water Resistance Test, per FBC, TAS 202-94
   4) Large Missile Impact Test per FBC, TAS 201-94
   5) Cyclic Wind Pressure Loading per FBC, TAS 203-94
   6) Forced Entry Test, per FBC 2411 3.2.1, TAS 202-94

   along with marked-up drawings and installation diagram of horizontal sliding window, prepared by Fenestration Testing Laboratory, Inc., Test Report No. **FTL-5954**, dated 07/10/09, signed and sealed by Julio E. Gonzalez, P.E.
   (Submitted under NOA#09-0806.03)

C. CALCULATIONS

1. Anchor verification calculations and structural analysis, complying with FBC-2007, dated 06/23/09, and updated on 06/04/15 to comply with **FBC-5th Edition (2014)**, prepared by Tilteco, Inc., signed, sealed by Walter A. Tillit, Jr., P.E.
   (Submitted partially under NOA#09-0806.03)
2. Glazing complies with **ASTM E1300-04.**

D. QUALITY ASSURANCE

1. Miami-Dade Department of Regulatory and Economic Resources (RER)

E. MATERIAL CERTIFICATIONS

1. NOA No. **14-0916.11** issued to **Kuraray America, Inc.** for their **"SentryGlas® (Clear and White) Glass Interlayers"** dated 06/25/15, expiring on 07/04/18.
2. NOA No. **14-0916.10** issued to **Kuraray America, Inc.** for their **"Butacite® PVB Glass Interlayer"** dated 04/25/15, expiring on 12/11/16.

F. STATEMENTS

1. Statement letter of conformance, complying with **FBC-6th Edition (2017)**, dated August 08, 2017, issued by Tilteco, Inc., signed and sealed signed and sealed by Walter A. Tillit, Jr., P.E.

Sifang Zhao, P.E.
Product Control Examiner
NOA No. 19-0911.006
Expiration Date: 10/21/2024
Approval Date: 10/03/2019

NOTICE OF ACCEPTANCE: EVIDENCE SUBMITTED

F. STATEMENTS (CONTINUED)

2. Statement letter of no financial interest, dated July 27, 2009, issued by Tilteco, Inc., signed and sealed by Walter A. Tillit, Jr., P.E.***(Submitted under NOA#09-0806.03)***
3. Laboratory compliance letter for Test Report No. **FTL-3388,** issued by Fenestration Testing Laboratory, Inc., dated 09/05/02, signed and sealed by Joseph Chan, P.E. ***(Submitted under NOA# 03-0314.07)***

G. OTHERS

1. Notice of Acceptance No. **15-0624.01**, issued to General Impact Glass & Windows, Corp. for their Series "18000 High Impact" Aluminum Horizontal Sliding Window – L.M.I., approved on 10/01/15 and expiring on 10/21/19.

2. NEW EVIDENCE SUBMITTED

A. DRAWINGS

1. None.

B. TESTS

1. None.

C. CALCULATIONS

1. None.

D. QUALITY ASSURANCE

1. Miami-Dade Department of Regulatory and Economic Resources (RER)

E. MATERIAL CERTIFICATIONS

1. NOA No. **17-0808.02** issued to **Kuraray America, Inc.** for their **"SentryGlas® (Clear and White) Glass Interlayers"** dated 12/28/17, expiring on 07/04/23.
2. NOA No. **19-0305.02** issued to **Kuraray America, Inc.** for their **"Trosifol® Ultraclear, clear and color PVB Glass Interlayer"** dated 01/18/18, expiring on 07/08/24.

F. STATEMENTS

1. Statement letter of conformance, complying with **FBC-6th Edition (2017)**, dated August 23, 2019, issued by Tilteco, Inc., signed and sealed signed and sealed by Walter A. Tillit, Jr., P.E.

G. OTHERS

1. Notice of Acceptance No. **17-1102.11**, issued to General Impact Glass & Windows, Corp. for their Series "18000 High Impact" Aluminum Horizontal Sliding Window – L.M.I., approved on 12/28/17 and expiring on 10/21/19.

Sifang Zhao, P.E.
Product Control Examiner
NOA No. 19-0911.006
Expiration Date: 10/21/2024
Approval Date: 10/03/2019

GENERAL NOTES:

1. SERIES 18000 HIGH IMPACT HORIZONTAL SLIDING WINDOW LARGE MISSILE IMPACT RESISTANT, SHOWN ON THIS PRODUCT APPROVAL DOCUMENT (P.A.D.) HAS BEEN VERIFIED FOR COMPLIANCE IN ACCORDANCE WITH THE 2017 (6th EDITION) OF THE FLORIDA BUILDING CODE. SERIES 18000 HIGH IMPACT HORIZONTAL SLIDING WINDOW LARGE MISSILE IMPACT RESISTANT, MAY BE INSTALLED AT HIGH VELOCITY HURRICANE ZONES. (MIAMI DADE/BROWARD COUNTIES)

   DESIGN WIND LOADS SHALL BE DETERMINED AS PER SECTION 1620 OF THE ABOVE MENTIONED CODES, USING ASCE 7-10 AND SHALL NOT EXCEED THE MAXIMUM (A.S.D.) DESIGN PRESSURE RATINGS INDICATED ON NOTE 2 BELOW.

   IN ORDER TO VERIFY THE ABOVE CONDITION, ULTIMATE DESIGN WIND LOADS DETERMINED PER ASCE 7-10 SHALL BE FIRST REDUCED TO A.S.D. DESIGN WIND LOADS BY MULTIPLYING THEM BY 0.6 IN ORDER TO COMPARE THESE W/ MAX. (A.S.D.) DESIGN PRESSURE RATINGS INDICATED ON NOTE 2 BELOW.

   IN ORDER TO VERIFY THAT ANCHORS ON THIS P.A.D., AS TESTED, WERE NOT OVER STRESSED, A 33% INCREASE IN ALLOWABLE STRESS FOR WIND LOADS WAS **NOT** USED IN THEIR ANALYSIS. ANCHOR'S SPACING TO WOOD HAS BEEN DETERMINED IN ACCORDANCE WITH N.D.S. 2015.
   THIS WINDOW'S ADEQUACY FOR IMPACT AND FATIGUE RESISTANCE HAS BEEN VERIFIED IN ACCORDANCE WITH SECTION 1626 OF THE ABOVE MENTIONED CODE AS PER PROTOCOLS TAS-201, TAS-202, TAS-203, PER FENESTRATION TESTING LABORATORY REPORT # 5954 AND AS PER SUBMITTED STRUCTURAL CALCULATIONS, PERFORMED AS PER SECTION 1616 OF THE FLORIDA BUILDING CODE.

2. **MAXIMUM A.S.D. DESIGN PRESSURE RATINGS FOR THESE WINDOWS SHALL BE AS SHOWN ON SHEET 12 (SCHEDULE #1). MAXIMUM ANCHOR SPACING SHALL BE AS PER SCHEDULE # 2, SHEET 12.**

3. **THIS SERIES 18000 HIGH IMPACT HORIZONTAL SLIDING WINDOW LARGE MISSILE IMPACT RESISTANT, WILL NOT REQUIRE A HURRICANE PROTECTION DEVICE.**

4. **THIS SERIES 18000 HIGH IMPACT HORIZONTAL SLIDING WINDOW LARGE MISSILE IMPACT RESISTANT, IS APPROVED FOR AIR AND WATER INFILTRATION. (SEE SCHEDULE # 1 ON SHEET 12).**

5. SERIES 18000 HIGH IMPACT HORIZONTAL SLIDING WINDOW LARGE MISSILE IMPACT RESISTANT, SHALL COMPLY WITH SECTIONS 2411.4.1, 2411.4.2 OF THE FLORIDA BUILDING CODE.

6. ALL ALUMINUM EXTRUSIONS SHALL BE ALUMINUM ASSOCIATION 6063-T6 ALLOY AND TEMPER, WITH Fy = 25.0 ksi MINIMUM. THE THICKNESS OF ALL EXTRUSIONS SHALL BE AS SHOWN ON THIS DRAWING.

7. ALL SCREWS USED FOR ASSEMBLY CONNECTIONS (METAL TO METAL) TO BE STAINLESS STEEL 304 OR 316 AISI SERIES OR CORROSION RESISTANT COATED CARBON STEEL AS PER DIN 50018 AND SECTION 2411.3.3.4 OF THE FLORIDA BUILDING CODE WITH 50 ksi YIELD STRENGTH AND 90 ksi TENSILE STRENGTH.

8. WOOD BUCKS BY OTHERS, MUST BE ANCHORED PROPERLY TO TRANSFER LOADS TO THE BUILDING STRUCTURE. WOOD BUCKS MUST BE SOUTHERN PINE WITH G = 0.55, AND SHALL COMPLY WITH SECTIONS 2411.3.3.3 & 2326 OF THE FLORIDA BUILDING CODE.

9. **ANCHOR NOTES:** EMBEDMENT AND EDGE DISTANCE ARE BEYOND ANY FINISH.

   (A) TO EXISTING POURED CONCRETE: (MIN. f'C = 3192 PSI), MIN. EDGE DISTANCE (E.D.) = 2 1/2".
   – 1/4"ø TAPCON ANCHORS 1 1/4" MIN. EMBEDMENT, AS MANUFACTURED BY ITW BUILDEX, INC. (COMPONENT 25), THRU 1" P.T. WOOD BUCK.

   (B) TO EXISTING A.S.T.M. C-90 CONCRETE BLOCK WALL. MIN. EDGE DISTANCE (E.D.) = 2 1/2".
   – 1/4"ø TAPCON ANCHORS W/ 1 1/4" MIN. EMBEDMENT, AS MANUFACTURED BY ITW BUILDEX, INC. (COMPONENT 25), THRU 1" P.T. WOOD BUCK.

   (C) TO EXISTING 2x P.T. WOOD BUCK. MIN. EDGE DISTANCE (E.D.) = 1".
   – 1/4"ø-14 TEK SCREW W/ 1 1/2" MIN. EMBEDMENT, AS MANUFACTURED BY ITW BUILDEX, INC. (COMPONENT 26).

   (D) TO EXISTING MIN. 1/8" THICK ALUMINUM MULLION (6063-T5 ALLOY), MIN. EDGE DISTANCE (E.D.) = 1/2".
   – 1/4"ø-14x3/4"(MIN.) TEK SCREW, AS MANUFACTURED BY ITW BUILDEX, INC. (COMPONENT 26).

   (E) TO EXISTING MIN. 12 GAGE (0.106") STEEL MEMBER (ASTM A-500, A-653 OR A-36), MIN. EDGE DISTANCE (E.D.) = 1/2".
   – 1/4"ø-14x3/4"(MIN.) TEK SCREW, AS MANUFACTURED BY ITW BUILDEX, INC. (COMPONENT 26).

10. PROVIDE 1/4" MAX. LOAD BEARING SHIM SPACE (TYP.).

11. REMAINING COMPONENTS FOR THIS SERIES 18000 HIGH IMPACT HORIZONTAL SLIDING WINDOW LARGE MISSILE IMPACT RESISTANT, SHALL BE AS INDICATED ON BILL OF MATERIALS, ON SHEET 3 OF THIS DRAWING.

12. SERIES 18000 HIGH IMPACT HORIZONTAL SLIDING WINDOW LARGE MISSILE IMPACT RESISTANT, MANUFACTURER LABEL SHALL BE PLACED ON A READILY VISIBLE LOCATION.
    ONE LABEL SHALL BE PLACED FOR EVERY UNIT. LABEL SHALL READ AS FOLLOWS:
    GENERAL IMPACT GLASS AND WINDOWS, CORP.
    HIALEAH, FLORIDA
    MIAMI-DADE COUNTY PRODUCT CONTROL APPROVED.

13. (a) THIS P.A.D. PREPARED BY THIS ENGINEER IS GENERIC AND DOES NOT PROVIDE INFORMATION FOR A SITE SPECIFIC PROJECT; i.e. WHERE THE SITE CONDITIONS DEVIATE FROM THE P.A.D.

    (b) CONTRACTOR TO BE RESPONSIBLE FOR THE SELECTION, PURCHASE AND INSTALLATION INCLUDING LIFE SAFETY OF THIS PRODUCT, BASED ON THIS P.A.D., PROVIDED HE/SHE DOES NOT DEVIATE FROM THE CONDITIONS DETAILED ON THIS DOCUMENT. CONSTRUCTION SAFETY AT SITE IS THE CONTRACTOR'S RESPONSIBILITY.

    (c) THIS P.A.D. WILL BE CONSIDERED INVALID IF ALTERED BY ANY MEANS.

    (d) ORIGINAL P.A.D. SHALL BEAR THE DATE AND ORIGINAL SEAL AND SIGNATURE OF THE PROFESSIONAL ENGINEER OF RECORD THAT PREPARED IT.

THIS DRAWING SHALL ONLY BE USED TO OBTAIN PERMITS IN THE STATE OF FLORIDA

PRODUCT RENEWED
as complying with the Florida Building Code
NOA-No. 19-0911.06
Expiration Date 10/21/2024
By
Miami-Dade Product Control

PRODUCT REVISED
as complying with the Florida Building Code
Acceptance No 17-1102.11
Expiration Date 10/21/2019
By
Miami Dade Product Control
MIAMI-DADE COUNTY

WALTER A. TILLIT JR. LICENSE No. 44167 STATE OF FLORIDA PROFESSIONAL ENGINEER
P.E. SEAL/SIGNATURE/DATE

©2017 TILTECO INC.

TILTECO INC.
TILLIT TESTING & ENGINEERING COMPANY
6355 N.W. 36th. St., Ste. 305, VIRGINIA GARDENS, Fl 33166
Phone : (305)871-1530 . Fax : (305)871-1531
e-mail: tilteco@aol.com
EB-0006719
WALTER A. TILLIT Jr., P.E.
FLORIDA Lic. 44167

FLORIDA BUILDING CODE (High Velocity Hurricane Zone)

SERIES 18000 HIGH IMPACT HORIZONTAL SLIDING WINDOW LARGE MISSILE IMPACT RESISTANT

GENERAL IMPACT GLASS & WINDOWS
The Clear Solution
290 WEST 78 ROAD
HIALEAH, FL. 33014
PHONE: (305) 558-8103
FAX: (305) 558-6665
www.generalimpact.com

REV. NO	DESCRIPTION	DATE	REV. No	DESCRIPTION	DATE
1	OLD 15-164	08/08/17	3		
2			4		

DRAWN BY: L.C.
08/08/17 DATE
17-150 DRAWING No
SHEET 1 OF 14

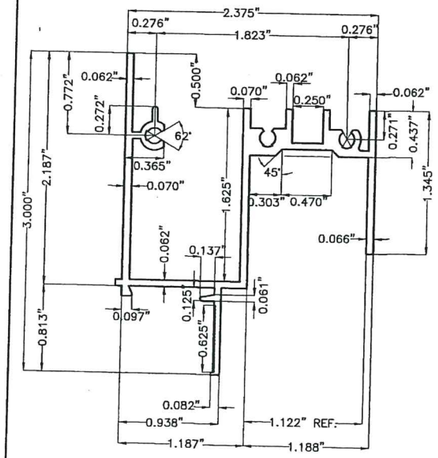

① FRAME HEAD
6063–T6 ALLOY & TEMPER

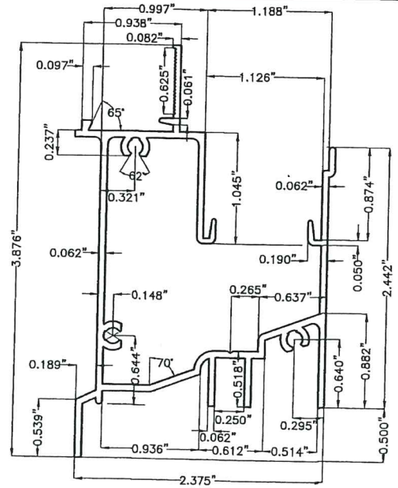

② FRAME SILL
6063–T6 ALLOY & TEMPER

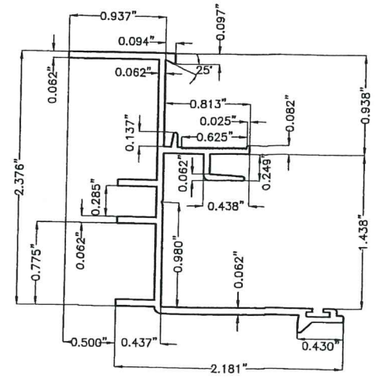

③ FRAME JAMB
6063–T6 ALLOY & TEMPER

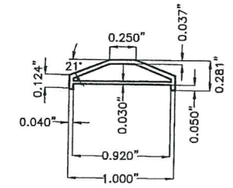

④ COLONIAL MUNTIN
6063–T6 ALLOY & TEMPER

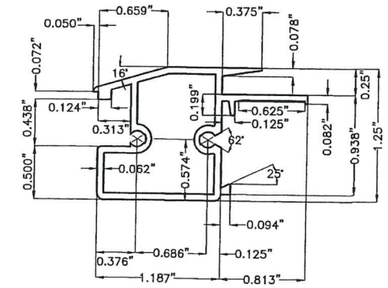

⑤ FIXED MEETING STILE
6063–T6 ALLOY & TEMPER

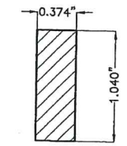

⑤A ALUM. INSERT BAR FOR ⑤
6063–T6 ALLOY & TEMPER

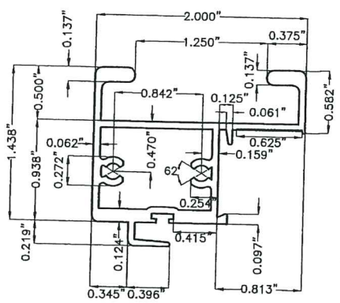

⑥ H.D. VENT MEETING STILE
6063–T6 ALLOY & TEMPER

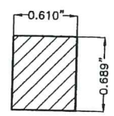

⑥A ALUM. INSERT BAR FOR ⑥
6063–T6 ALLOY & TEMPER

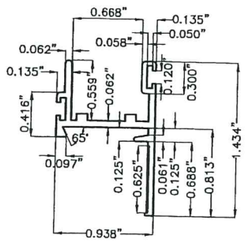

⑦ TOP AND BOTTOM RAIL
6063–T6 ALLOY & TEMPER

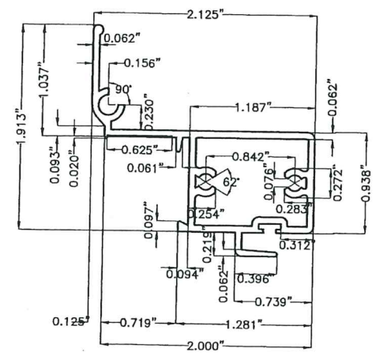

⑧ JAMB STILE
6063–T6 ALLOY & TEMPER

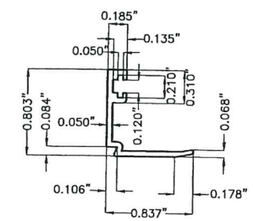

⑨A GLAZING BEAD FOR 7/16" GLASS
6063–T6 ALLOY & TEMPER

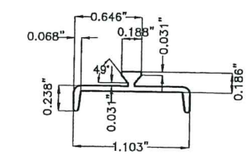

⑩ SILL TRACK INSERT
6063–T6 ALLOY & TEMPER

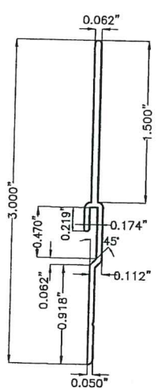

⑪ SILL RISER
6063–T6 ALLOY & TEMPER

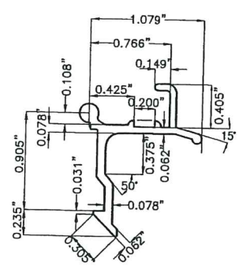

⑫ VENT LATCH
6063–T6 ALLOY & TEMPER
4" LONG

PRODUCT RENEWED
as complying with the Florida Building Code
NOA-No. 19-0911.06
Expiration Date 10/21/2024
By
Miami-Dade Product Control

COMPONENTS

SCALE 3/4"=1"

PRODUCT REVISED
as complying with the Florida Building Code
Acceptance No 17-1102.11
Expiration Date 10/21/2019
By
Miami-Dade Product Control
MIAMI-DADE COUNTY

WALTER A. TILLIT JR. LICENSE No 44167 STATE OF FLORIDA PROFESSIONAL ENGINEER

P.E. SEAL/SIGNATURE/DATE

©2017 TILTECO INC.

TILTECO INC.
TILLIT TESTING & ENGINEERING COMPANY
6355 N.W. 36th. St., Ste. 305, VIRGINIA GARDENS, Fl 33166
Phone : (305)871–1530 . Fax : (305)871–1531
e–mail: tilteco@aol.com
EB–0006719
WALTER A. TILLIT Jr., P.E.
FLORIDA Lic. 44167

FLORIDA BUILDING CODE (High Velocity Hurricane Zone)

SERIES 18000 HIGH IMPACT HORIZONTAL SLIDING WINDOW
LARGE MISSILE IMPACT RESISTANT

GENERAL IMPACT GLASS & WINDOWS
The Clear Solution
290 WEST 78 ROAD
HIALEAH, FL. 33014
PHONE: (305) 558–8103
FAX: (305) 558–6665
www.generalimpact.com

REV. NO	DESCRIPTION	DATE	REV. No	DESCRIPTION	DATE
1	OLD 15–164	08/08/17	3		
2			4		

DRAWN BY: L.C.
08/08/17 DATE
17-150 DRAWING No
SHEET 2 OF 14

BILL OF MATERIALS

ITEM	QUANTITY	DESCRIPTION	MATERIAL
1	1	FRAME HEAD	6063–T6
2	1	FRAME SILL	6063–T6
3	2	FRAME JAMB	6063–T6
4		COLONIAL MUNTIN (OPTIONAL)	6063–T6
5	1/ VENT	FIXED MEETING STILE	6063–T6
5A	1/ BAR	ALUMINUM BAR INSERT FOR 5	6063–T6
6	1/ VENT	H.D. VENT MEETING STILE	6063–T6
6A	1/ BAR	ALUMINUM BAR INSERT FOR 6	6063–T6
7	2/ VENT	TOP AND BOTTOM RAIL	6063–T6
8	1/ VENT	JAMB STILE	6063–T6
9A	AS REQD.	GLAZING BEAD FOR 7/16" GLASS	6063–T6
10	1	SILL TRACK INSERT	6063–T6
11	AS REQD.	SILL RISER	6063–T6
12	2/ VENT	VENT LATCH AT 9 1/2" FROM ENDS, 3" LONG	6063–T6
13	1/ LATCH	VENT LATCH SPRING	ST. STEEL
14		BUMPON SPACER, 1/4" DIAMETER HALF SPHERE, CLEAR. 3" FROM CORNERS MAX. AND 12" O.C. (MAX.), AT MID–GLASS BITE ELEVATION, BY FRANK LOWE RUBBEL AND GASKET FLB–28, CLEAR.	SILICONE
15	AS REQD.	FRAME/VENT ASSEMBLY SCREWS, #8 x 1" P.H. SMS, CRS	--
16	2/ VENT	FRAME SILL SCREWS CONNECTING TO 5, #8 x 3 1/2" P.H. SMS, CRS	--
17	AS REQD.	VENT & FIX. RAIL W'STRIPPING, AMESBURY OR EQUIV.	--
18	AS REQD.	FRAME W'STRIPPING, AMESBURY OR EQUIV.	--
19	2	BAFFLE, M & M PLASTICS	--
20	2/ BAFFLE	BAFFLE SCREW, #8 x 1/2" F.H. SMS	--
21	AS REQD.	GLAZING BULB VINYL	NEOPRENE
22	4/ VENT	ROLLER HOUSING & GUIDE	CELCON
23	2/ VENT	ROLLER	BRASS/ST. ST.
24	2/ VENT	ROLLER PIN	ST. STEEL
25		ANCHORS, 1/4"ø TAPCON F.H. ANCHOR, ITW BUILDEX, INC.	STEEL
26		ANCHORS, 1/4"ø –14 TEK SCREW ITW BUILDEX, INC. TO WOOD BUCK, ALUMINUM OR STEEL MEMBER.	STEEL
27		DOW CORNING 795	STRUCT. SILICONE
28		SEALANT: DOW CORNING WHITE SILICONE OR EQUAL AT FRAME ALL AROUND (EXTERIOR & INTERIOR)	SILICONE
29A		7/16" NOMINAL (0.444" OVERALL) LAMINATED GLASS WITH (1) 3/16" HEAT STRENGTHENED GLASS + A 0.090" BUTACITE® PVB INTERLAYER BY KURARAY AMERICA, INC. + (1) 3/16" HEAT STRENGTHENED GLASS.	LAMINATED GLASS
29B		7/16" NOMINAL (0.444" OVERALL) LAMINATED GLASS WITH (1) 3/16" HEAT STRENGTHENED GLASS + A 0.090" SENTRYGLAS® INTERLAYER BY KURARAY AMERICA, INC. + (1) 3/16" HEAT STRENGTHENED GLASS.	LAMINATED GLASS
30	(1) EACH WEEP HOLE	1"x1"x3" LONG WEEP HOLE RETICULATED FOAM GASKET, MODEL 10PPI, BY FRANK LOWE RUBBER & GASKET CO.	FILTER FOAM

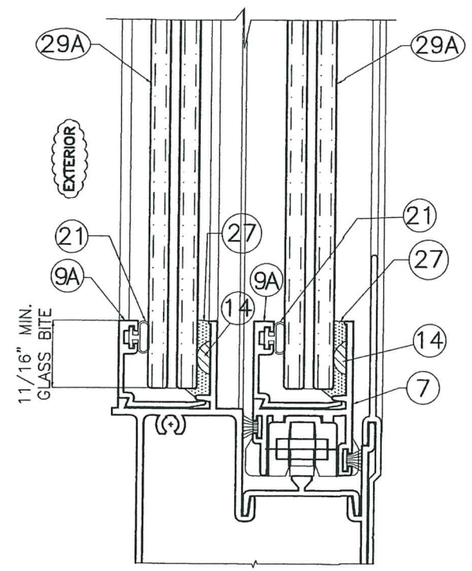

GLAZING DETAIL FOR 29A
SCALE 3/4" = 1"

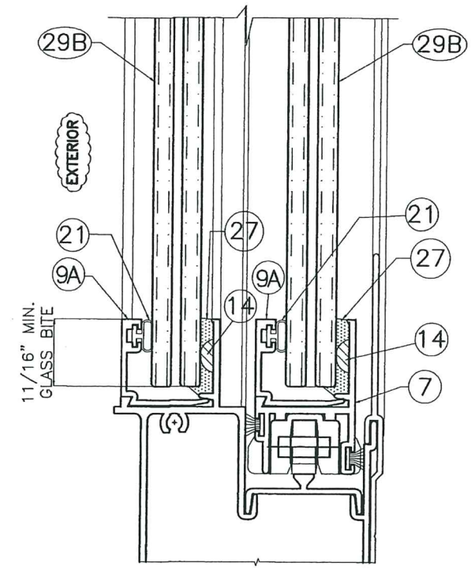

GLAZING DETAIL FOR 29B
SCALE 3/4" = 1"

FLORIDA BUILDING CODE (High Velocity Hurricane Zone)

PRODUCT RENEWED
as complying with the Florida Building Code
NOA-No. 19-0911.06
Expiration Date 10/21/2024
By
Miami-Dade Product Control

PRODUCT REVISED
as complying with the Florida Building Code
Acceptance No 17-1102.11
Expiration Date 10/21/2019
By
Miami Dade Product Control

MIAMI-DADE COUNTY

WALTER A. TILLIT JR
LICENSE
No. 44167
STATE OF FLORIDA
PROFESSIONAL ENGINEER

P.E. SEAL/SIGNATURE/DATE

©2017 TILTECO INC.

TILTECO INC.
TILLIT TESTING & ENGINEERING COMPANY
6355 N.W. 36th. St., Ste. 305, VIRGINIA GARDENS, Fl 33166
Phone : (305)871–1530 . Fax : (305)871–1531
e–mail: tilteco@aol.com
EB–0006719
WALTER A. TILLIT Jr., P.E.
FLORIDA Lic. 44167

SERIES 18000 HIGH IMPACT HORIZONTAL SLIDING WINDOW
LARGE MISSILE IMPACT RESISTANT

GENERAL IMPACT GLASS & WINDOWS
The Clear Solution
290 WEST 78 ROAD
HIALEAH, FL. 33014
PHONE: (305) 558–8103
FAX: (305) 558–6665
www.generalimpact.com

REV. NO	DESCRIPTION	DATE	REV. No	DESCRIPTION	DATE
1	OLD 15–164	08/08/17	3		
2			4		

DRAWN BY: L.C.
08/08/17 DATE
17-150 DRAWING No
SHEET 3 OF 14

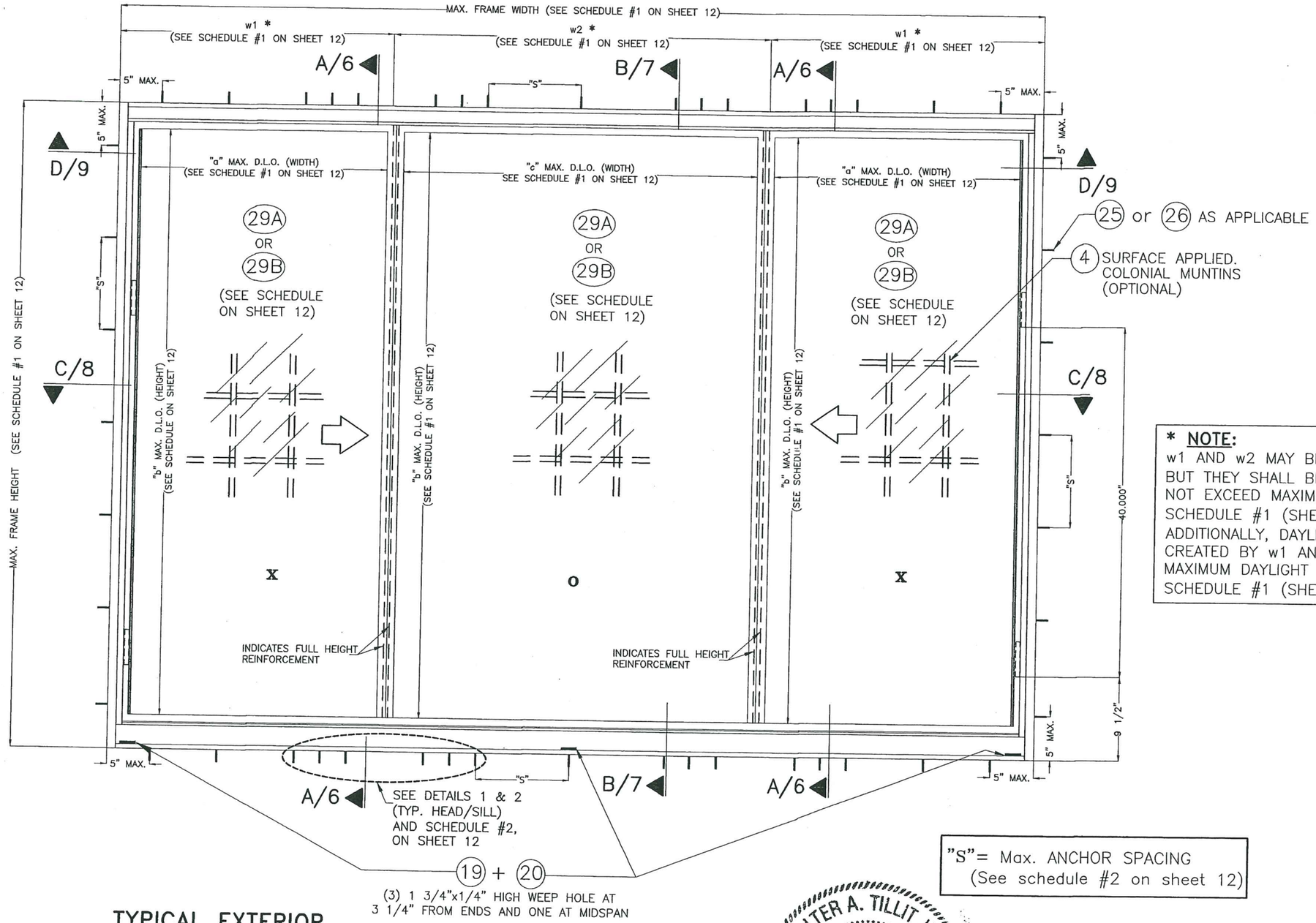

*** NOTE:**
w1 AND w2 MAY BE DIFFERENT FROM EACH OTHER BUT THEY SHALL BE SUCH THAT (2)w1 + w2 DOES NOT EXCEED MAXIMUM FRAME WIDTH INDICATED ON SCHEDULE #1 (SHEET 12).
ADDITIONALLY, DAYLIGHT OPENINGS "a" AND "c", CREATED BY w1 AND w2 SHALL BE SUCH THAT MAXIMUM DAYLIGHT OPENINGS VALUES INDICATED ON SCHEDULE #1 (SHEET 12) ARE NOT EXCEEDED.

"S"= Max. ANCHOR SPACING
(See schedule #2 on sheet 12)

TYPICAL EXTERIOR ELEVATION FOR XOX WINDOW

SCALE 1"=1'-0

PRODUCT RENEWED
as complying with the Florida Building Code
NOA-No. 19-0911.06
Expiration Date 10/21/2024
By
Miami-Dade Product Control

PRODUCT REVISED
as complying with the Florida Building Code
Acceptance No 17-1102.11
Expiration Date 10/21/2019
By
Miami Dade Product Control

MIAMI-DADE COUNTY

WALTER A. TILLIT JR. LICENSE No. 44167 STATE OF FLORIDA PROFESSIONAL ENGINEER

P.E. SEAL/SIGNATURE/DATE

©2017 TILTECO INC.

TILTECO INC.
TILLIT TESTING & ENGINEERING COMPANY
6355 N.W. 36th. St., Ste. 305, VIRGINIA GARDENS, Fl 33166
Phone : (305)871-1530 . Fax : (305)871-1531
e-mail: tilteco@aol.com
EB-0006719
WALTER A. TILLIT Jr., P.E.
FLORIDA Lic. 44167

FLORIDA BUILDING CODE (High Velocity Hurricane Zone)

SERIES 18000 HIGH IMPACT HORIZONTAL SLIDING WINDOW
LARGE MISSILE IMPACT RESISTANT

GENERAL IMPACT GLASS & WINDOWS
The Clear Solution
290 WEST 78 ROAD
HIALEAH, FL. 33014
PHONE: (305) 558-8103
FAX: (305) 558-6665
www.generalimpact.com

REV. NO	DESCRIPTION	DATE	REV. No	DESCRIPTION	DATE
1	OLD 15-164	08/08/17	3		
2			4		

DRAWN BY: L.C.
08/08/17 DATE
17-150 DRAWING No
SHEET 4 OF 14

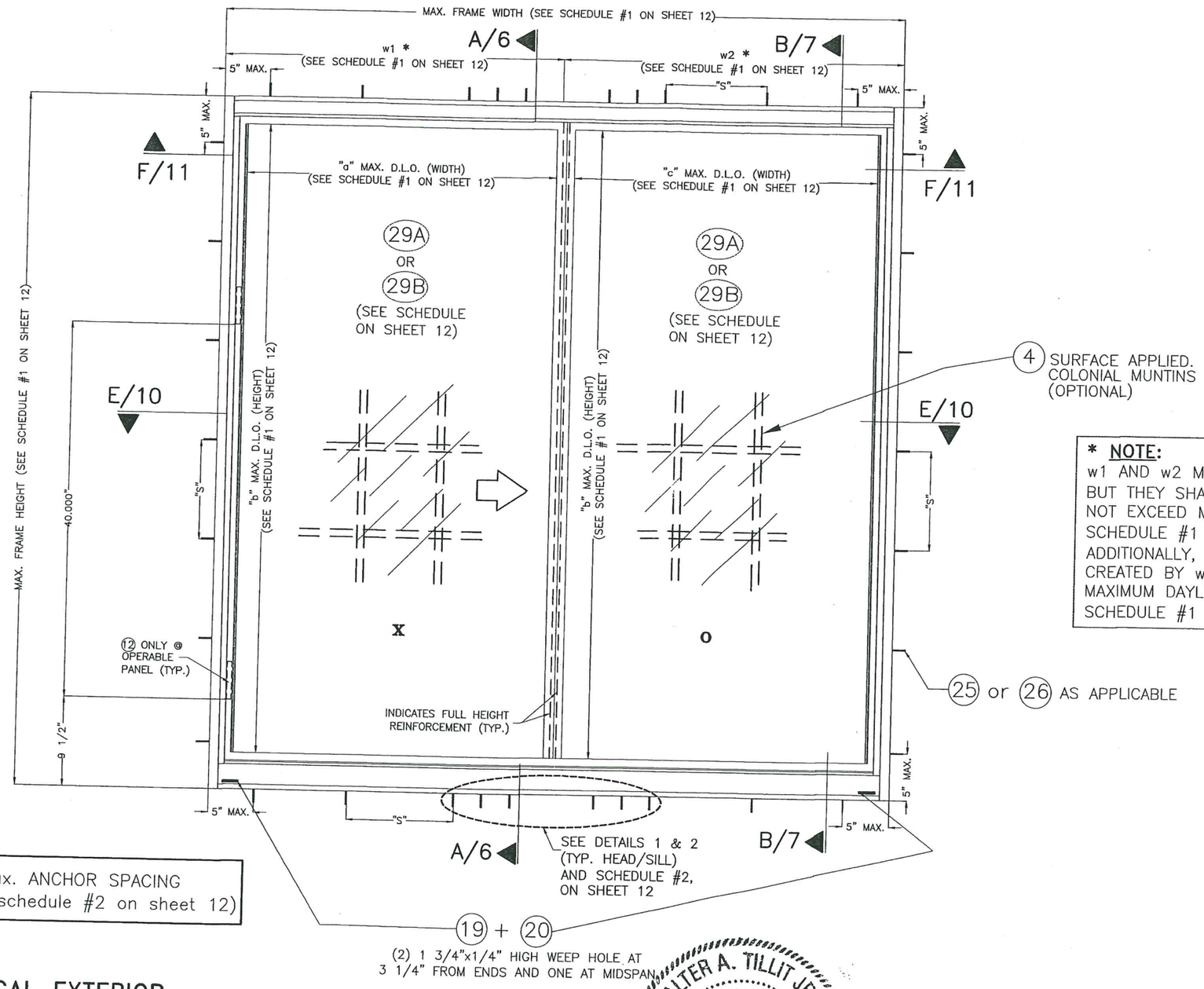

*** NOTE:**
w1 AND w2 MAY BE DIFFERENT FROM EACH OTHER BUT THEY SHALL BE SUCH THAT (2)w1 + w2 DOES NOT EXCEED MAXIMUM FRAME WIDTH INDICATED ON SCHEDULE #1 (SHEET 12).
ADDITIONALLY, DAYLIGHT OPENINGS "a" AND "c", CREATED BY w1 AND w2 SHALL BE SUCH THAT MAXIMUM DAYLIGHT OPENINGS VALUES INDICATED ON SCHEDULE #1 (SHEET 12) ARE NOT EXCEEDED.

"S"= Max. ANCHOR SPACING
(See schedule #2 on sheet 12)

TYPICAL EXTERIOR ELEVATION FOR XO (SHOWN) OR OX (SIMILAR) WINDOW

SCALE 1"=1'-0

PRODUCT RENEWED
as complying with the Florida Building Code
NOA-No. 19-0911.06
Expiration Date 10/21/2024
By
Miami-Dade Product Control

FLORIDA BUILDING CODE (High Velocity Hurricane Zone)

PRODUCT REVISED
as complying with the Florida Building Code
Acceptance No 17-1102.11
Expiration Date 10/21/2019
By
Miami Dade Product Control

MIAMI-DADE COUNTY

WALTER A. TILLIT JR. LICENSE No. 44167 STATE OF FLORIDA PROFESSIONAL ENGINEER

P.E. SEAL/SIGNATURE/DATE

© 2017 TILTECO INC.

TILTECO INC.
TILLIT TESTING & ENGINEERING COMPANY
6355 N.W. 36th. St., Ste. 305, VIRGINIA GARDENS, Fl 33166
Phone : (305)871-1530 . Fax : (305)871-1531
e-mail: tilteco@aol.com
EB-0006719
WALTER A. TILLIT Jr., P.E.
FLORIDA Lic. 44167

SERIES 18000 HIGH IMPACT HORIZONTAL SLIDING WINDOW
LARGE MISSILE IMPACT RESISTANT

GENERAL IMPACT GLASS & WINDOWS
The Clear Solution
290 WEST 78 ROAD
HIALEAH, FL. 33014
PHONE: (305) 558-8103
FAX: (305) 558-6665
www.generalimpact.com

REV. NO	DESCRIPTION	DATE	REV. No	DESCRIPTION	DATE
1	OLD 15-164	08/08/17	3		
2			4		

DRAWN BY: L.C.
08/08/17 DATE
17-150 DRAWING No
SHEET 5 OF 14

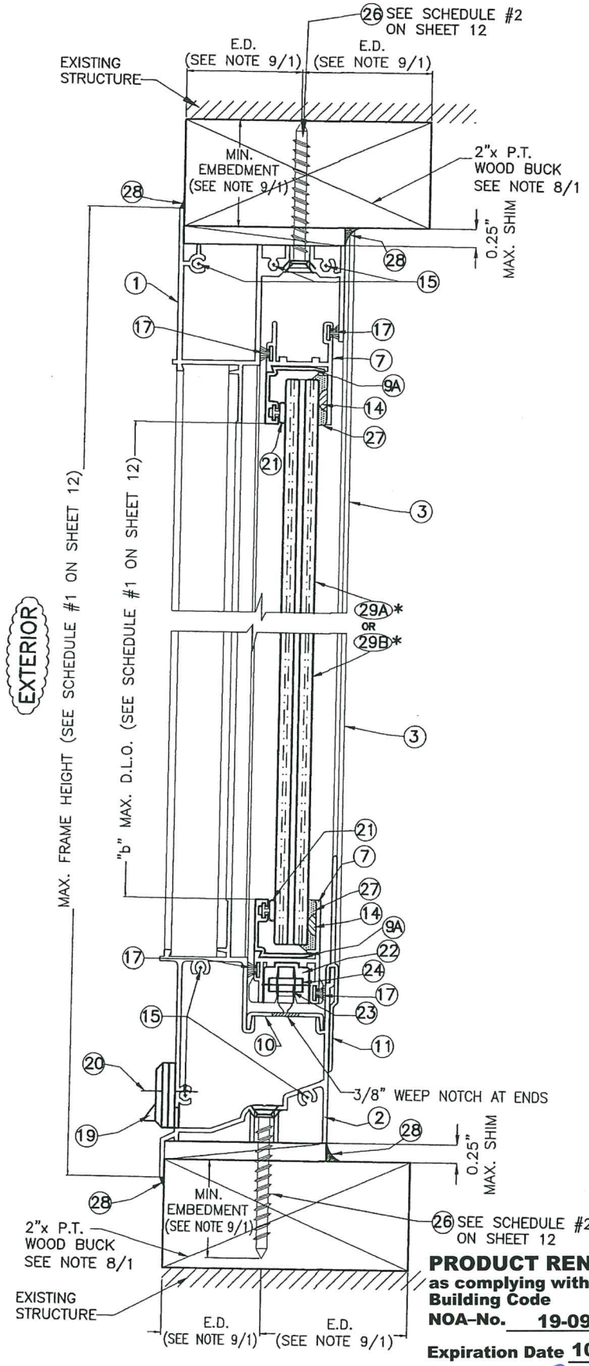

SECTION A–A (TO WOOD)

SCALE: 1/2"=1"

PRODUCT RENEWED
as complying with the Florida Building Code
NOA-No. 19-0911.06
Expiration Date 10/21/2024
By
Miami-Dade Product Control

*SEE SCHEDULE #1 ON SHEET 12

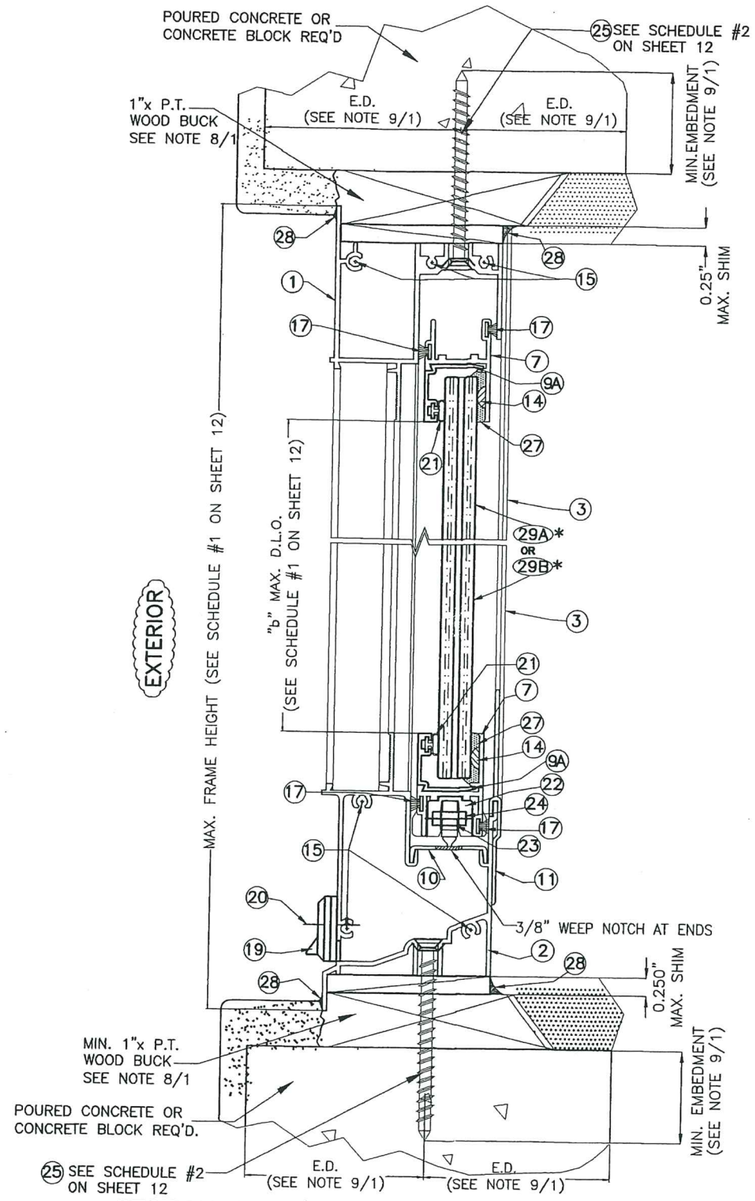

SECTION A–A (TO POURED CONCRETE OR CONCRETE BLOCK)

SCALE: 1/2"=1"

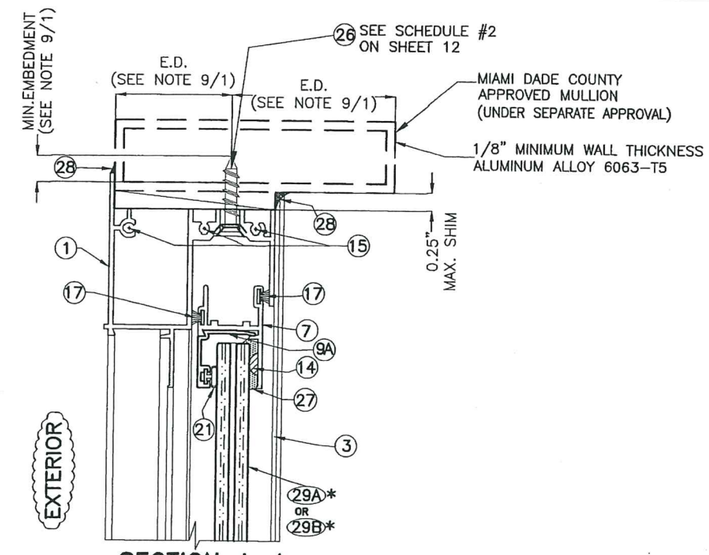

SECTION A–A (TO ALUMINUM MULLION)

SCALE: 1/2"=1"

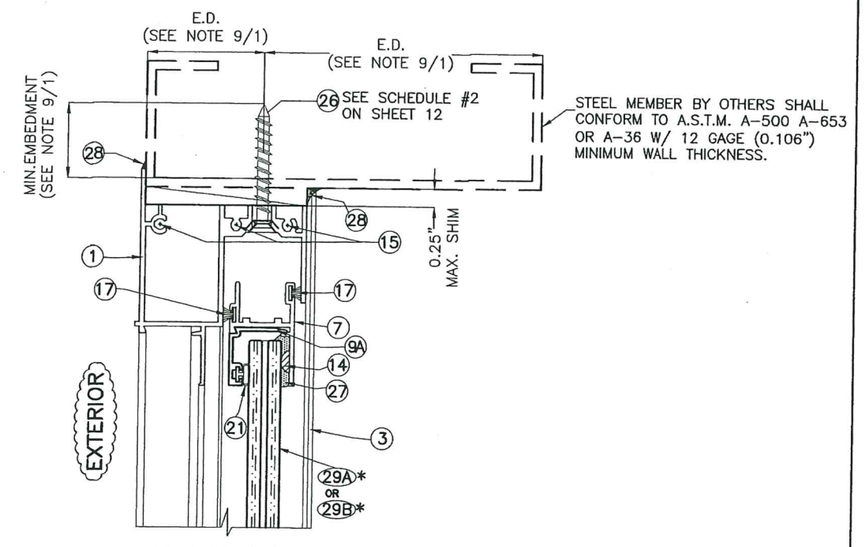

SECTION A–A (TO STEEL MEMBER)

SCALE: 1/2"=1"

FLORIDA BUILDING CODE (High Velocity Hurricane Zone)

PRODUCT REVISED
as complying with the Florida Building Code
Acceptance No 17-1102.11
Expiration Date 10/21/2019
By
Miami Dade Product Control

MIAMI-DADE COUNTY

WALTER A. TILLIT JR. LICENSE No. 44167 STATE OF FLORIDA PROFESSIONAL ENGINEER

P.E. SEAL/SIGNATURE/DATE

©2017 TILTECO INC.

TILTECO INC.
TILLIT TESTING & ENGINEERING COMPANY
6355 N.W. 36th. St., Ste. 305, VIRGINIA GARDENS, Fl 33166
Phone : (305)871–1530 . Fax : (305)871–1531
e–mail: tilteco@aol.com
EB–0006719
WALTER A. TILLIT Jr., P.E.
FLORIDA Lic. 44167

SERIES 18000 HIGH IMPACT HORIZONTAL SLIDING WINDOW
LARGE MISSILE IMPACT RESISTANT

GENERAL IMPACT GLASS & WINDOWS
The Clear Solution
290 WEST 78 ROAD
HIALEAH, FL. 33014
PHONE: (305) 558–8103
FAX: (305) 558–6665
www.generalimpact.com

REV. NO	DESCRIPTION	DATE	REV. No	DESCRIPTION	DATE
1	OLD 15–164	08/08/17	3		
2			4		

DRAWN BY: L.C.
08/08/17 DATE
17-150 DRAWING No
SHEET 6 OF 14

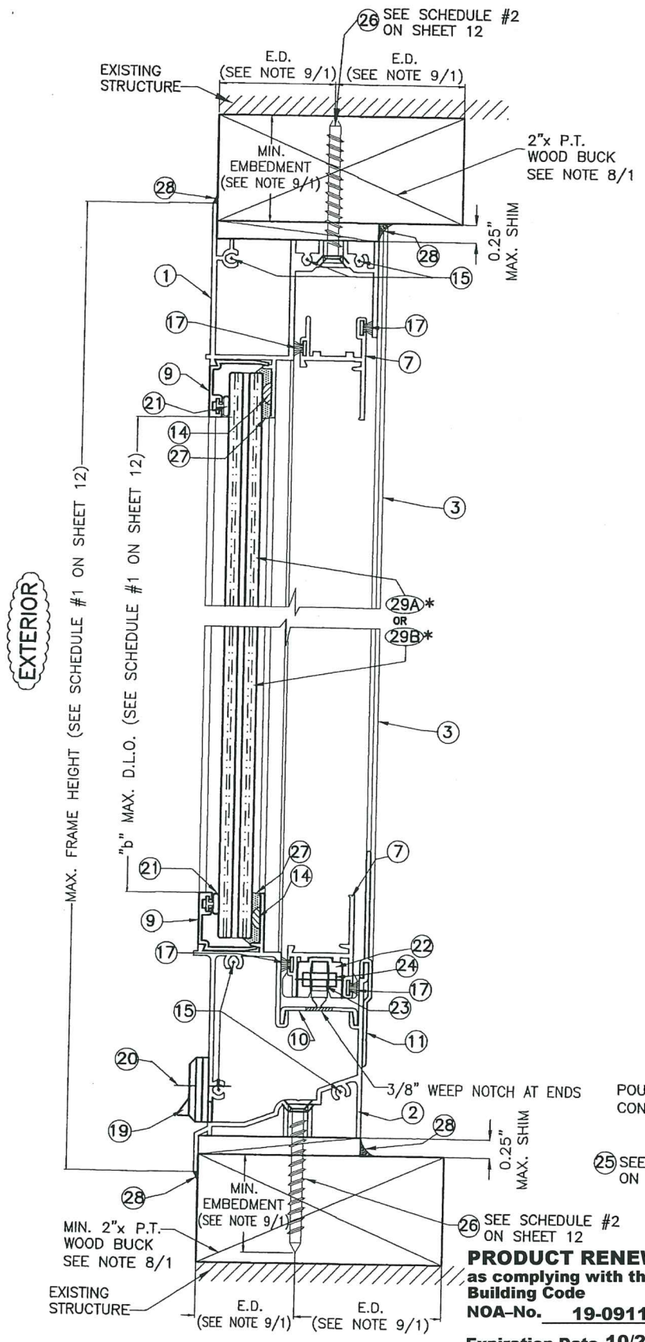

SECTION B–B (TO WOOD)

SCALE: 1/2"=1"

PRODUCT RENEWED
as complying with the Florida Building Code
NOA-No. 19-0911.06
Expiration Date 10/21/2024
By
Miami-Dade Product Control

*SEE SCHEDULE #1 ON SHEET 12

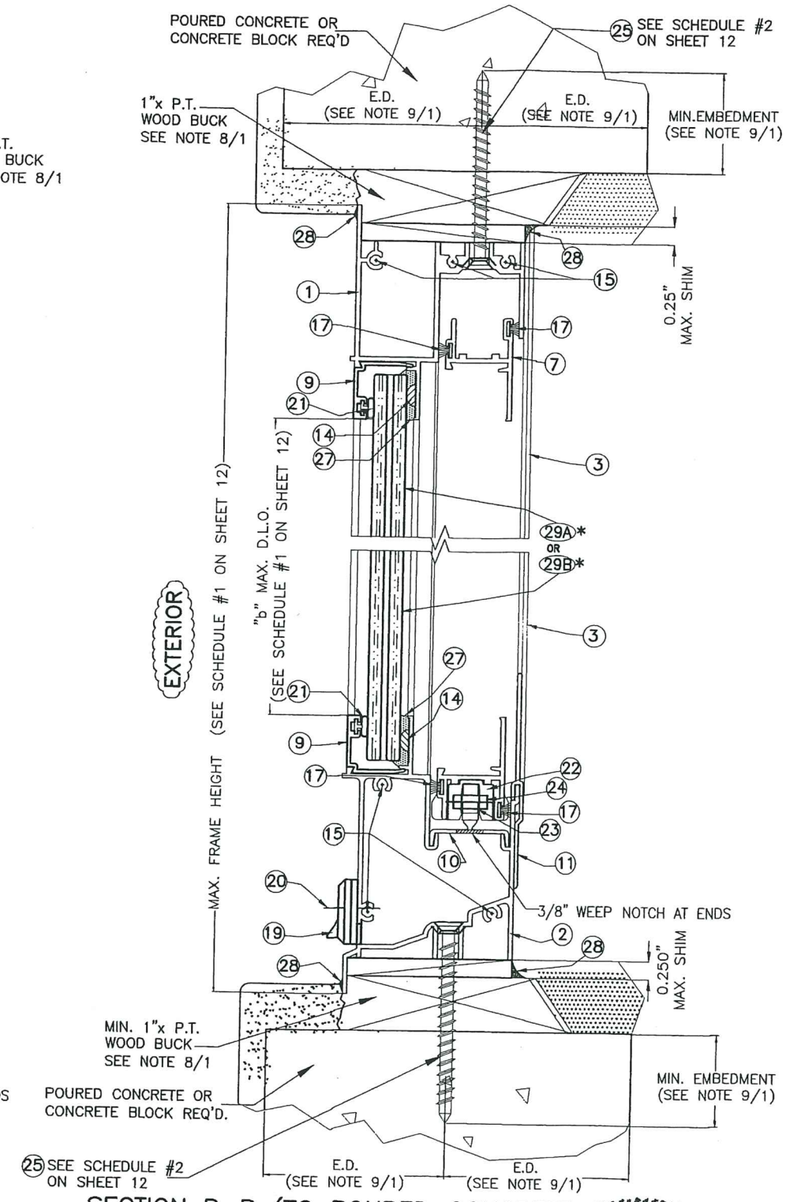

SECTION B–B (TO POURED CONCRETE OR CONCRETE BLOCK)

SCALE: 1/2"=1"

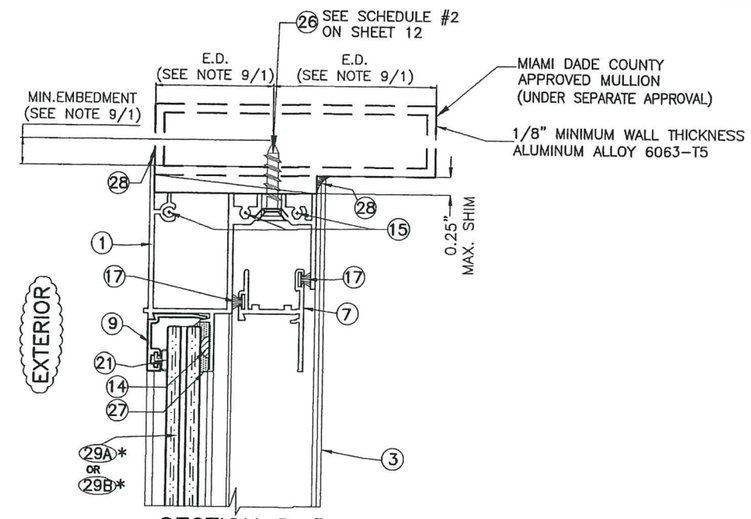

SECTION B–B (TO ALUMINUM MULLION)

SCALE: 1/2"=1"

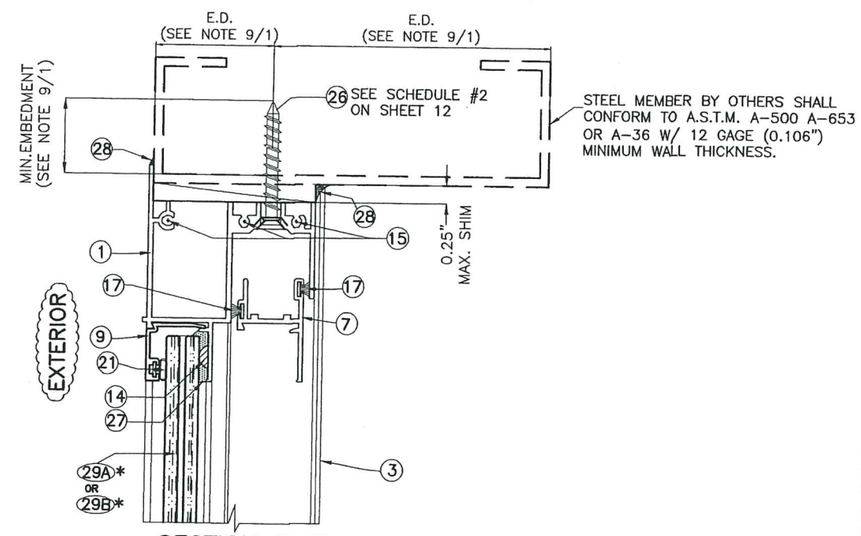

SECTION B–B (TO STEEL MEMBER)

SCALE: 1/2"=1"

PRODUCT REVISED
as complying with the Florida Building Code
Acceptance No 17-1102.11
Expiration Date 10/21/2019
By
Miami Dade Product Control

MIAMI-DADE COUNTY

WALTER A. TILLIT JR. LICENSE No. 44167 STATE OF FLORIDA PROFESSIONAL ENGINEER

P.E. SEAL/SIGNATURE/DATE

©2017 TILTECO INC.

TILTECO INC.
TILLIT TESTING & ENGINEERING COMPANY
6355 N.W. 36th. St., Ste. 305, VIRGINIA GARDENS, Fl 33166
Phone : (305)871–1530 . Fax : (305)871–1531
e–mail: tilteco@aol.com
EB–0006719
WALTER A. TILLIT Jr., P.E.
FLORIDA Lic. 44167

FLORIDA BUILDING CODE (High Velocity Hurricane Zone)

SERIES 18000 HIGH IMPACT HORIZONTAL SLIDING WINDOW
LARGE MISSILE IMPACT RESISTANT

GENERAL IMPACT GLASS & WINDOWS
The Clear Solution
290 WEST 78 ROAD
HIALEAH, FL. 33014
PHONE: (305) 558–8103
FAX: (305) 558–6665
www.generalimpact.com

REV. NO	DESCRIPTION	DATE	REV. No	DESCRIPTION	DATE
1	OLD 15–164	08/08/17	3		
2			4		

DRAWN BY: L.C.

08/08/17 DATE

17-150 DRAWING No

SHEET 7 OF 14

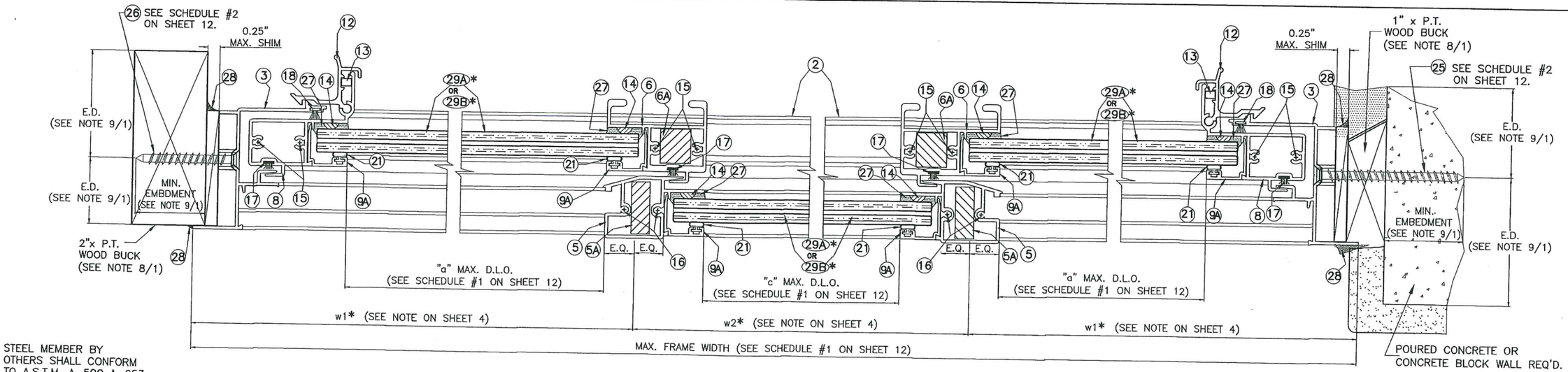

EXTERIOR

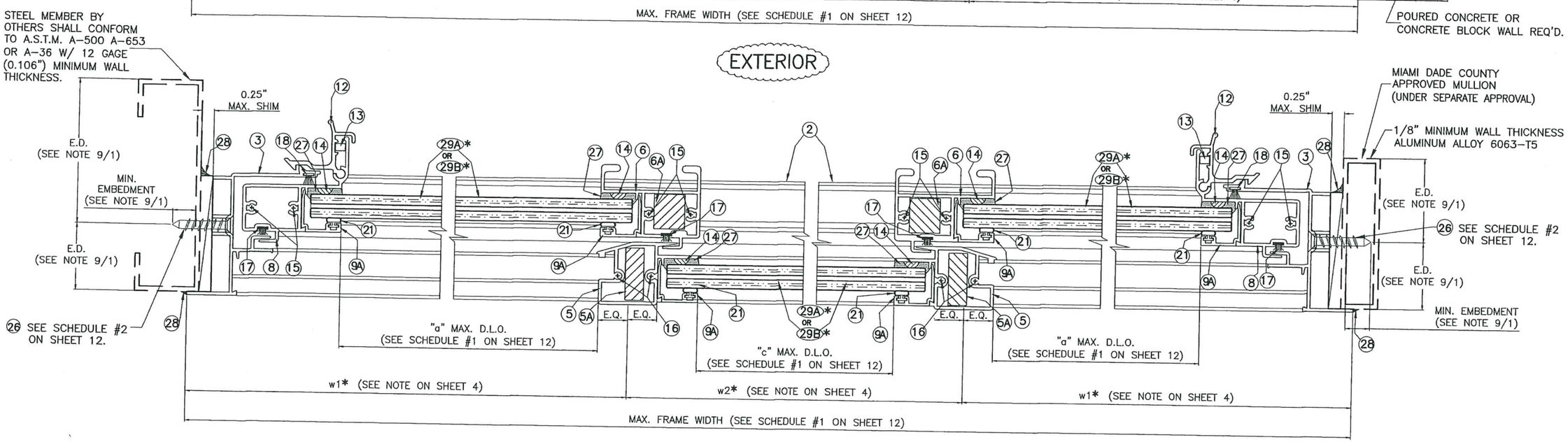

EXTERIOR

*SEE SCHEDULE #1 ON SHEET 12

SECTIONS C-C

SCALE 1/2"

FLORIDA BUILDING CODE (High Velocity Hurricane Zone)

PRODUCT RENEWED
as complying with the Florida Building Code
NOA-No. 19-0911.06
Expiration Date 10/21/2024
By
Miami-Dade Product Control

PRODUCT REVISED
as complying with the Florida Building Code
Acceptance No 17-1102.11
Expiration Date 10/21/2019
By
Miami Dade Product Control
MIAMI-DADE COUNTY

WALTER A. TILLIT JR. LICENSE No. 44167 STATE OF FLORIDA PROFESSIONAL ENGINEER
P.E. SEAL/SIGNATURE/DATE

©2017 TILTECO INC.

TILTECO INC.
TILLIT TESTING & ENGINEERING COMPANY
6355 N.W. 36th. St., Ste. 305, VIRGINIA GARDENS, Fl 33166
Phone : (305)871-1530 . Fax : (305)871-1531
e-mail: tilteco@aol.com
EB-0006719
WALTER A. TILLIT Jr., P.E.
FLORIDA Lic. 44167

SERIES 18000 HIGH IMPACT HORIZONTAL SLIDING WINDOW
LARGE MISSILE IMPACT RESISTANT

GENERAL IMPACT GLASS & WINDOWS
The Clear Solution
290 WEST 78 ROAD
HIALEAH, FL. 33014
PHONE: (305) 558-8103
FAX: (305) 558-6665
www.generalimpact.com

REV. NO	DESCRIPTION	DATE	REV. No	DESCRIPTION	DATE
1	OLD 15-164	08/08/17	3		
2			4		

DRAWN BY: L.C.
08/08/17 DATE
17-150 DRAWING No
SHEET 8 OF 14

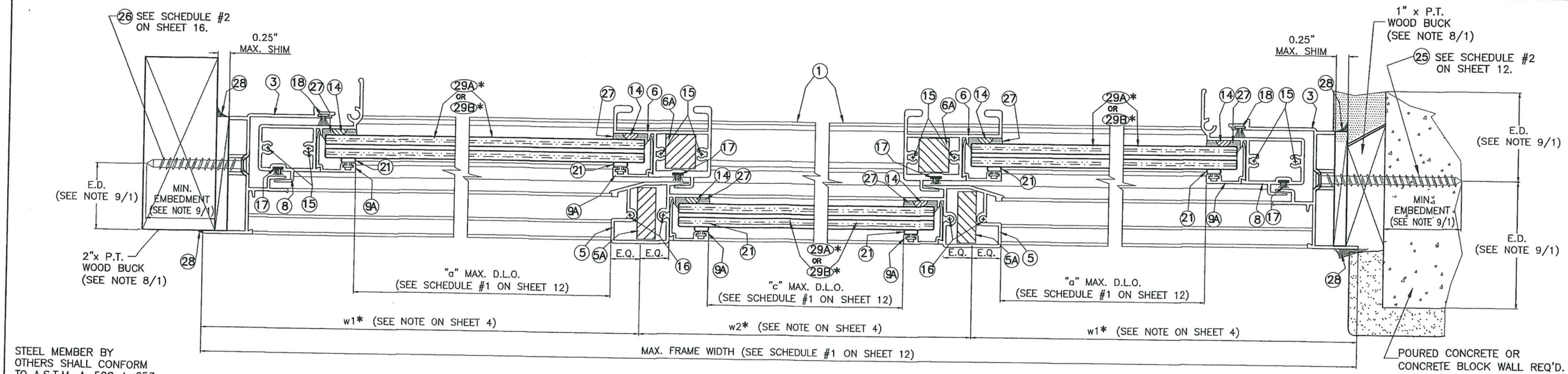

EXTERIOR

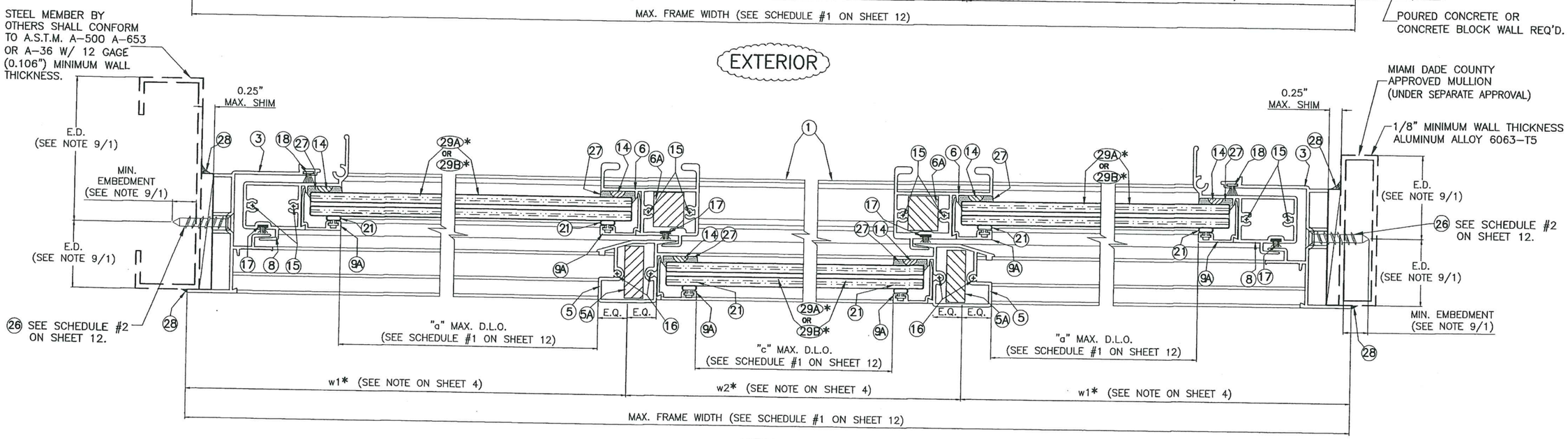

EXTERIOR

*SEE SCHEDULE #1 ON SHEET 12

SECTIONS D-D (TYP.)

SCALE 1/2"

FLORIDA BUILDING CODE (High Velocity Hurricane Zone)

PRODUCT RENEWED
as complying with the Florida Building Code
NOA-No. 19-0911.06
Expiration Date 10/21/2024
By
Miami-Dade Product Control

PRODUCT REVISED
as complying with the Florida Building Code
Acceptance No 17-1102.11
Expiration Date 10/21/2019
By
Miami Dade Product Control
MIAMI-DADE COUNTY

WALTER A. TILLIT JR. LICENSE No. 44167 STATE OF FLORIDA PROFESSIONAL ENGINEER
P.E. SEAL/SIGNATURE/DATE

©2017 TILTECO INC.

TILTECO INC.
TILLIT TESTING & ENGINEERING COMPANY
6355 N.W. 36th. St., Ste. 305, VIRGINIA GARDENS, Fl 33166
Phone : (305)871-1530 . Fax : (305)871-1531
e-mail: tilteco@aol.com
EB-0006719
WALTER A. TILLIT Jr., P.E.
FLORIDA Lic. 44167

SERIES 18000 HIGH IMPACT HORIZONTAL SLIDING WINDOW
LARGE MISSILE IMPACT RESISTANT

GENERAL IMPACT GLASS & WINDOWS
"The Clear Solution"
290 WEST 78 ROAD
HIALEAH, FL. 33014
PHONE: (305) 558-8103
FAX: (305) 558-6665
www.generalimpact.com

REV. NO	DESCRIPTION	DATE	REV. No	DESCRIPTION	DATE
1	OLD 15-164	08/08/17	3		
2			4		

DRAWN BY: L.C.
08/08/17 DATE
17-150 DRAWING No
SHEET 9 OF 14

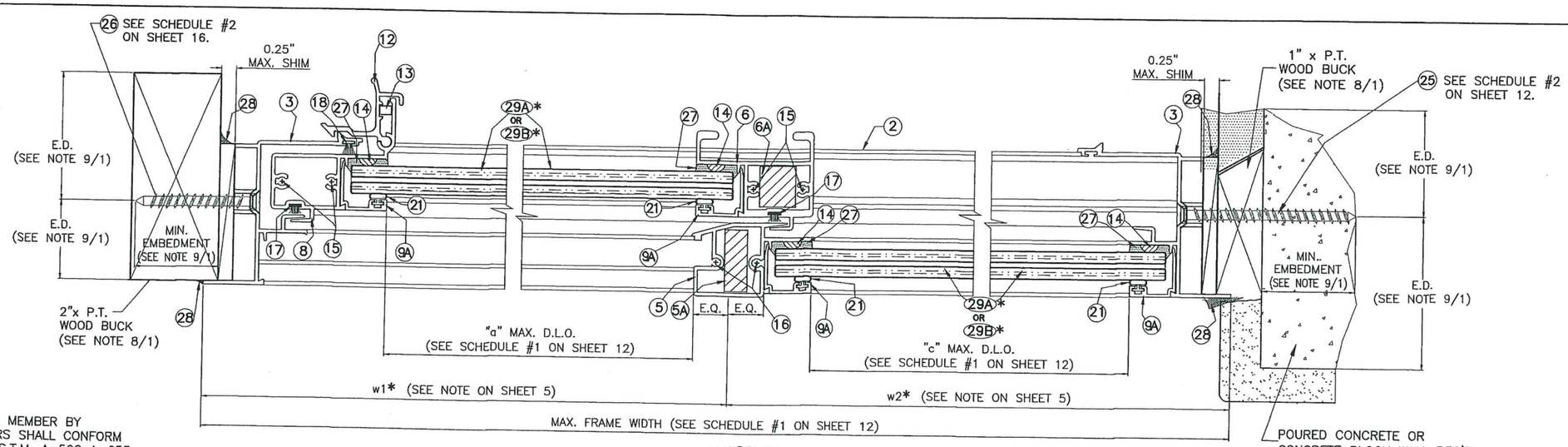

EXTERIOR

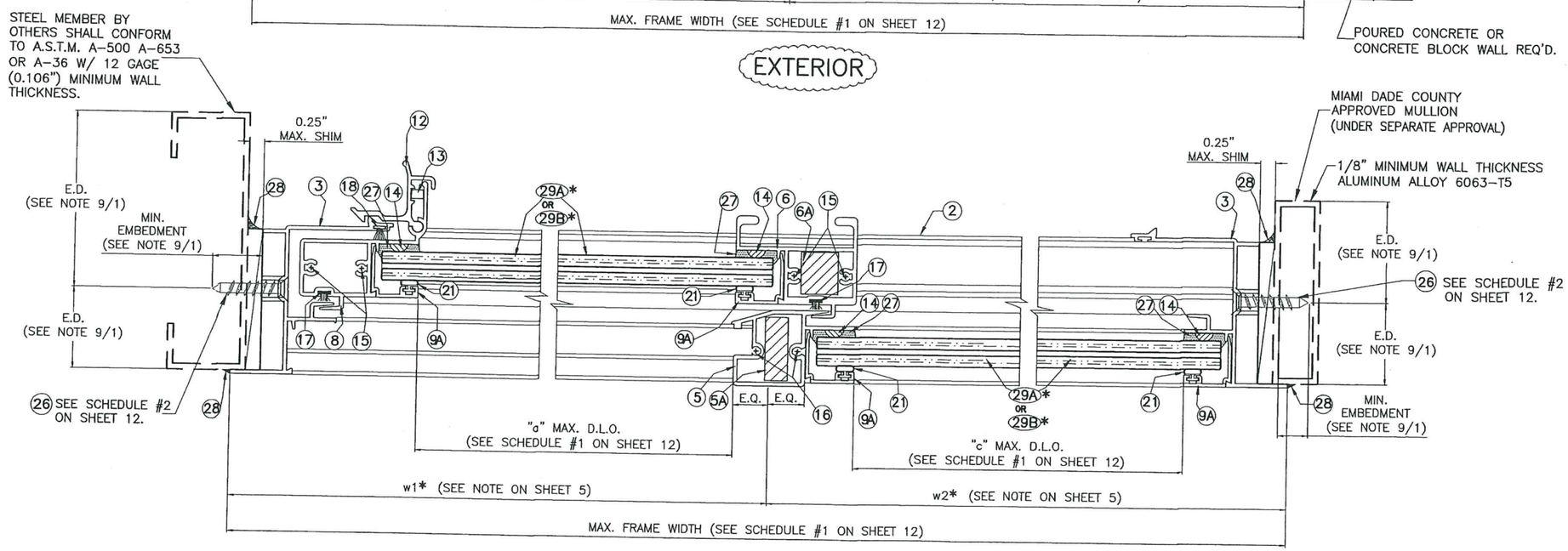

EXTERIOR

*SEE SCHEDULE #1 ON SHEET 12

SECTIONS E-E (XO)

SCALE 1/2" = 1"

FLORIDA BUILDING CODE (High Velocity Hurricane Zone)

PRODUCT RENEWED
as complying with the Florida Building Code
NOA-No. 19-0911.06
Expiration Date 10/21/2024
By
Miami-Dade Product Control

PRODUCT REVISED
as complying with the Florida Building Code
Acceptance No 17-1102.11
Expiration Date 10/21/2019
By
Miami Dade Product Control
MIAMI-DADE COUNTY

WALTER A. TILLIT JR. LICENSE No. 44167 STATE OF FLORIDA PROFESSIONAL ENGINEER
P.E. SEAL/SIGNATURE/DATE

©2017 TILTECO INC.

TILTECO INC.
TILLIT TESTING & ENGINEERING COMPANY
6355 N.W. 36th. St., Ste. 305, VIRGINIA GARDENS, Fl 33166
Phone : (305)871-1530 . Fax : (305)871-1531
e-mail: tilteco@aol.com
EB-0006719
WALTER A. TILLIT Jr., P.E.
FLORIDA Lic. 44167

SERIES 18000 HIGH IMPACT HORIZONTAL SLIDING WINDOW
LARGE MISSILE IMPACT RESISTANT

GENERAL IMPACT GLASS & WINDOWS
The Clear Solution
290 WEST 78 ROAD
HIALEAH, FL. 33014
PHONE: (305) 558-8103
FAX: (305) 558-6665
www.generalimpact.com

REV. NO	DESCRIPTION	DATE	REV. No	DESCRIPTION	DATE
1	OLD 15-184	08/08/17	3		
2			4		

DRAWN BY: L.C.
08/08/17 DATE
17-150 DRAWING No
SHEET 10 OF 14

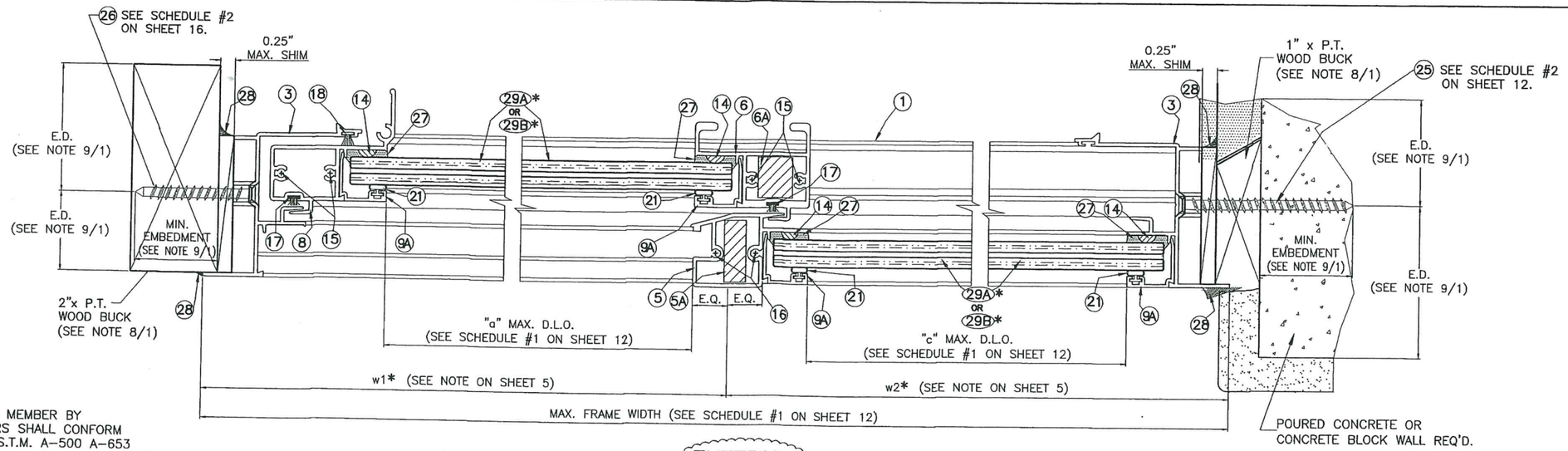

EXTERIOR

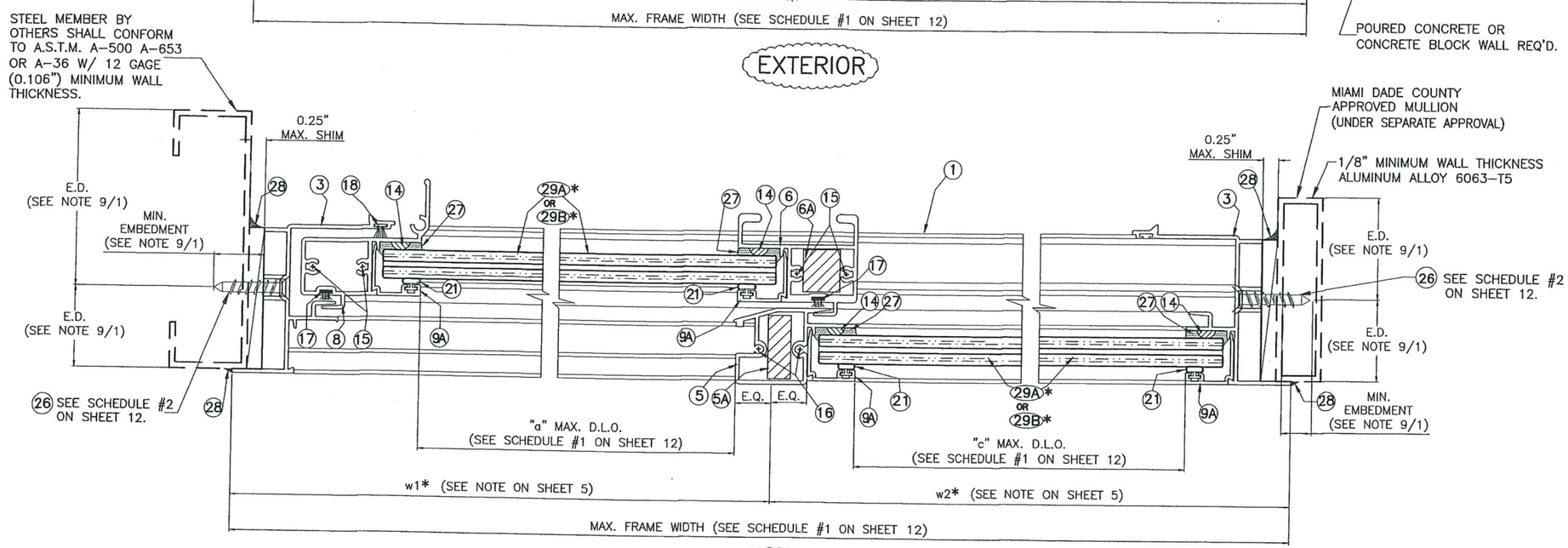

EXTERIOR

*SEE SCHEDULE #1 ON SHEET 12

SECTIONS F-F (XO)

SCALE 1/2" = 1"

FLORIDA BUILDING CODE (High Velocity Hurricane Zone)

PRODUCT RENEWED
as complying with the Florida Building Code
NOA-No. 19-0911.06
Expiration Date 10/21/2024
By
Miami-Dade Product Control

PRODUCT REVISED
as complying with the Florida Building Code
Acceptance No 17-1102.11
Expiration Date 10/21/2019
By
Miami Dade Product Control
MIAMI-DADE COUNTY

WALTER A. TILLIT JR. LICENSE No. 44167 STATE OF FLORIDA PROFESSIONAL ENGINEER
PROFESSIONAL SEAL/SIGNATURE/DATE

©2017 TILTECO INC.

TILTECO INC.
TILLIT TESTING & ENGINEERING COMPANY
6355 N.W. 36th. St., Ste. 305, VIRGINIA GARDENS, Fl 33166
Phone : (305)871-1530 . Fax : (305)871-1531
e-mail: tilteco@aol.com
EB-0006719
WALTER A. TILLIT Jr., P.E.
FLORIDA Lic. 44167

SERIES 18000 HIGH IMPACT HORIZONTAL SLIDING WINDOW
LARGE MISSILE IMPACT RESISTANT

GENERAL IMPACT GLASS & WINDOWS
The Clear Solution
290 WEST 78 ROAD
HIALEAH, FL. 33014
PHONE: (305) 558-8103
FAX: (305) 558-6665
www.generalimpact.com

REV. NO	DESCRIPTION	DATE	REV. No	DESCRIPTION	DATE
1	OLD 15-164	08/08/17	3		
2			4		

DRAWN BY: L.C.
08/08/17 DATE
17-150 DRAWING No
SHEET 11 OF 14

HORIZONTAL SLIDING WINDOW – SCHEDULE # 1

(XOX) WINDOW										
CASE #	MAX. A.S.D. DESIGN PRESSURE RATING	MAXIMUM WATER PRESSURE	MAXIMUM FRAME WIDTH	MAXIMUM FRAME HEIGHT	MAX. OPERABLE (X) WINDOW WIDTH w1	MAX. FIXED (O) WINDOW WIDTH w2	MAX. OPERABLE (X) D.L.O. WIDTH "a"	MAX. FIXED (O) D.L.O. WIDTH "c"	MAX. OPERABLE (X) OR FIXED (O) D.L.O. HEIGHT "b"	REQ'D GLASS TYPE
I	+100, -130 psf.	+15 psf.	111 1/8"	63 1/4"	37 1/16"	37"	33 1/2"	33 1/2"	56 1/4"	29B
II	+100, -130 psf.	+15 psf.	111 1/8"	63 1/4"	28 1/16"	55"	24 3/4"	51"	56 1/4"	29B
III	+90, -100 psf.	+13.5 psf.	111 1/8"	74 1/4"	37 1/16"	37"	33 1/2"	33 1/2"	67 1/4"	29A
IV	+90, -100 psf.	+13.5 psf.	111 1/8"	74 1/4"	28 1/16"	55"	24 3/4"	51"	67 1/4"	29A
V	+100, -150 psf.	+15 psf.	96 1/4"	63 1/4"	32 1/8"	32"	28 3/8"	28 3/8"	56 1/4"	29B

(XO) OR (OX) WINDOW										
CASE #	MAX. A.S.D. DESIGN PRESSURE RATING	MAXIMUM WATER PRESSURE	MAXIMUM FRAME WIDTH	MAXIMUM FRAME HEIGHT	MAX. OPERABLE (X) WINDOW WIDTH w1	MAX. FIXED (O) WINDOW WIDTH w2	MAX. OPERABLE (X) D.L.O. WIDTH "a"	MAX. FIXED (O) D.L.O. WIDTH "c"	MAX. OPERABLE (X) OR FIXED (O) D.L.O. HEIGHT "b"	REQ'D GLASS TYPE
I	+100, -150 psf.	+15 psf.	74 1/4"	56 1/4"	37 1/8"	37 1/8"	33 9/16"	33 9/16"	49 1/4"	29B
II	+100, -130 psf.	+15 psf.	74 1/4"	63 1/4"	37 1/8"	37 1/8"	33 9/16"	33 9/16"	56 1/4"	29B
III	+90, -100 psf.	+13.5 psf.	74 1/4"	74 1/4"	37 1/8"	37 1/8"	33 9/16"	33 9/16"	67 1/4"	29A
IV	+100, -150 psf.	+15 psf.	60 1/4"	60 1/4"	30 1/8"	30 1/8"	26 9/16"	26 9/16"	53 1/4"	29B

MAXIMUM ANCHOR SPACING "S" – SCHEDULE #2

SUBSTRATE	ANCHOR TYPE	NEGATIVE A.S.D. DESIGN PRESSURE RATING (PSF)	HEAD/SILL	JAMB	HEAD/SILL REQUIRED ADDITIONAL ANCHORS CONCENTRATION AT MEETING STILE
CONCRETE OR BLOCK (SEE NOTE 9A & 9B/1)	1/4"ø ITW BUILDEX TAPCON (25)	80 or less	9" O.C.	9" O.C.	SEE DETAIL 2 (6 ANCHORS)
		> 80 up to 100	7 1/4" O.C.	7 1/4" O.C.	SEE DETAIL 2 (6 ANCHORS)
		> 100 up to 130	5 1/2" O.C.	5 1/2" O.C.	SEE DETAIL 2 (6 ANCHORS)
		> 130 up to 150	4 3/4" O.C.	4 3/4" O.C.	SEE DETAIL 2 (6 ANCHORS)
METAL (SEE NOTE 9D/1)	1/4"ø–14 ITW BUILDEX TEK SCREW (26)	80 or less	9" O.C.	9" O.C.	SEE DETAIL 1 (4 ANCHORS)
		> 80 up to 100	9" O.C.	9" O.C.	SEE DETAIL 2 (6 ANCHORS)
		> 100 up to 130	7 1/2" O.C.	7 1/2" O.C.	SEE DETAIL 2 (6 ANCHORS)
		> 130 up to 150	6 5/8" O.C.	6 5/8" O.C.	SEE DETAIL 2 (6 ANCHORS)
WOOD (SEE NOTE 9C/1)	1/4"ø–14 ITW BUILDEX TEK SCREW (26)	80 or less	9" O.C.	9" O.C.	SEE DETAIL 1 (4 ANCHORS)
		> 80 up to 100	9" O.C.	9" O.C.	SEE DETAIL 2 (6 ANCHORS)
		> 100 up to 130	7" O.C.	7" O.C.	SEE DETAIL 2 (6 ANCHORS)
		> 130 up to 150	6" O.C.	6" O.C.	SEE DETAIL 2 (6 ANCHORS)

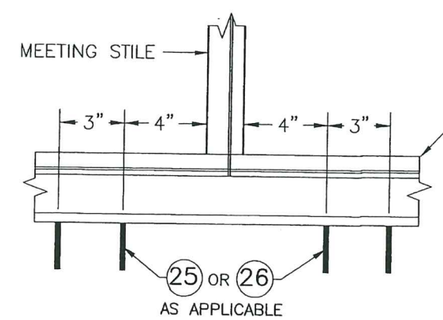

DETAIL 1
AT HEAD & SILL
4 ANCHORS

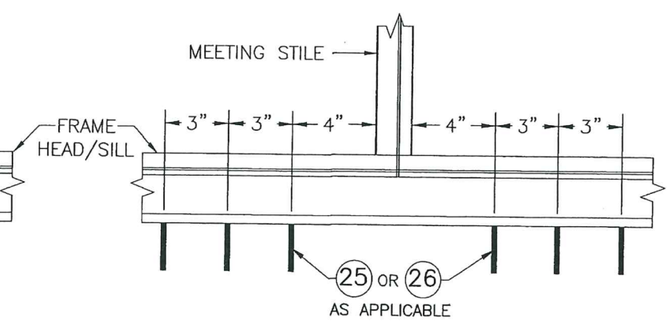

DETAIL 2
AT HEAD & SILL
6 ANCHORS

FLORIDA BUILDING CODE (High Velocity Hurricane Zone)

PRODUCT RENEWED
as complying with the Florida Building Code
NOA-No. 19-0911.06
Expiration Date 10/21/2024
By
Miami-Dade Product Control

PRODUCT REVISED
as complying with the Florida Building Code
Acceptance No. 17-1102.11
Expiration Date 10/21/2019
By
Miami Dade Product Control
MIAMI-DADE COUNTY

WALTER A. TILLIT JR. LICENSE No. 44167 STATE OF FLORIDA PROFESSIONAL ENGINEER
P.E. SEAL/SIGNATURE/DATE

© 2017 TILTECO INC.

TILTECO INC.
TILLIT TESTING & ENGINEERING COMPANY
6355 N.W. 36th. St., Ste. 305, VIRGINIA GARDENS, Fl 33166
Phone : (305)871-1530 . Fax : (305)871-1531
e-mail: tilteco@aol.com
EB-0006719
WALTER A. TILLIT Jr., P.E.
FLORIDA Lic. 44167

SERIES 18000 HIGH IMPACT HORIZONTAL SLIDING WINDOW
LARGE MISSILE IMPACT RESISTANT

GENERAL IMPACT GLASS & WINDOWS
The Clear Solution
290 WEST 78 ROAD
HIALEAH, FL. 33014
PHONE: (305) 558-8103
FAX: (305) 558-6665
www.generalimpact.com

REV. NO	DESCRIPTION	DATE	REV. No	DESCRIPTION	DATE
1	OLD 15-164	08/08/17	3		
2			4		

DRAWN BY: L.C.
08/08/17 DATE
17-150 DRAWING No
SHEET 12 OF 14

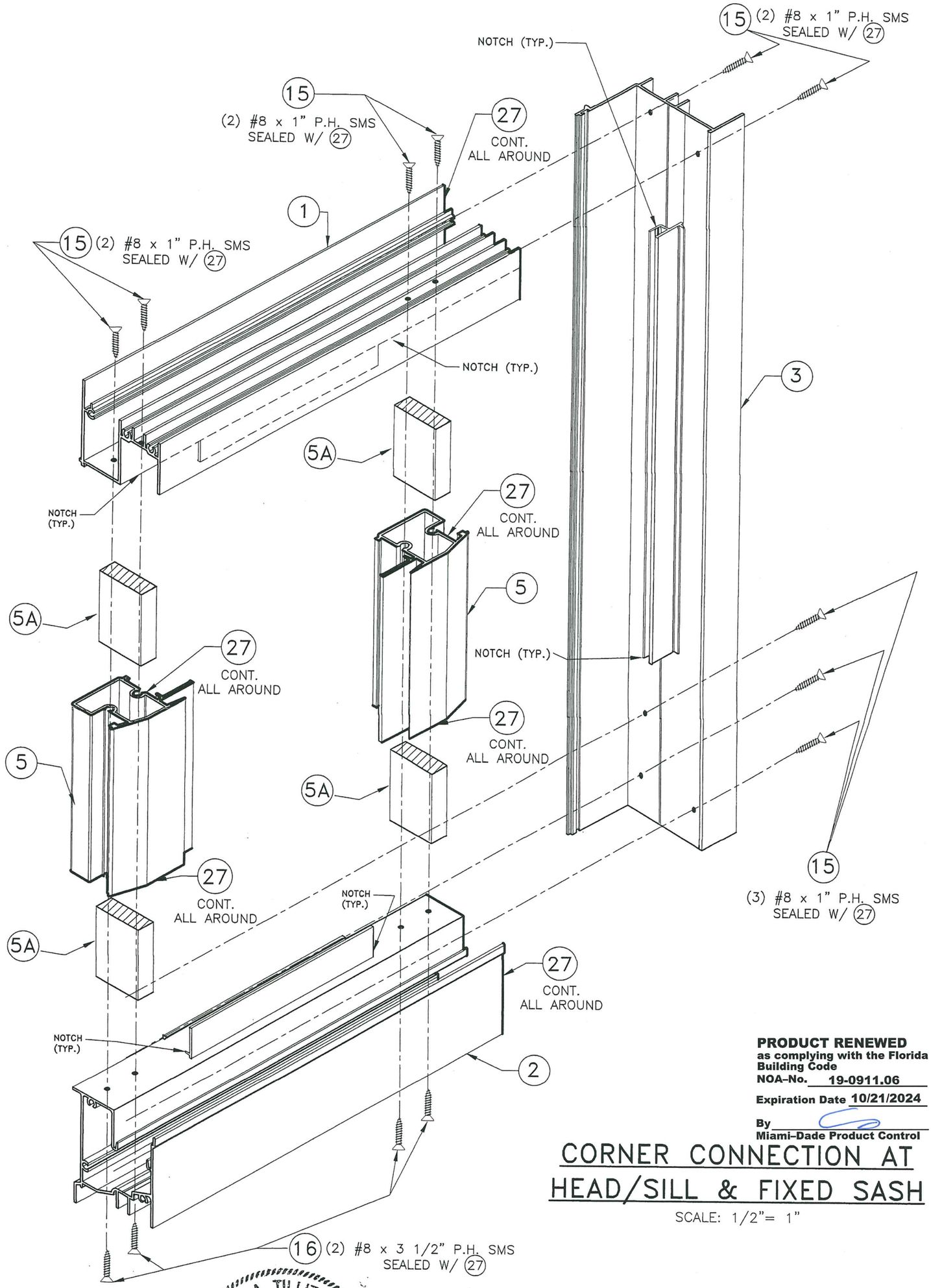

PRODUCT RENEWED
as complying with the Florida Building Code
NOA-No. 19-0911.06
Expiration Date 10/21/2024
By
Miami-Dade Product Control

CORNER CONNECTION AT HEAD/SILL & FIXED SASH

SCALE: 1/2"= 1"

FLORIDA BUILDING CODE (High Velocity Hurricane Zone)

PRODUCT REVISED
as complying with the Florida Building Code
Acceptance No 17-1107.11
Expiration Date 10/21/2019
By
Miami Dade Product Control

MIAMI-DADE COUNTY

WALTER A. TILLIT JR. LICENSE NO. 44167 STATE OF FLORIDA PROFESSIONAL ENGINEER

SEAL/SIGNATURE/DATE

© 2017 TILTECO INC.

TILTECO INC.
TILLIT TESTING & ENGINEERING COMPANY
6355 N.W. 36th. St., Ste. 305, VIRGINIA GARDENS, Fl 33166
Phone : (305)871-1530 . Fax : (305)871-1531
e-mail: tilteco@aol.com
EB-0006719
WALTER A. TILLIT Jr., P.E.
FLORIDA Lic. 44167

SERIES 18000 HIGH IMPACT HORIZONTAL SLIDING WINDOW
LARGE MISSILE IMPACT RESISTANT

GENERAL IMPACT GLASS & WINDOWS
The Clear Solution
290 WEST 78 ROAD
HIALEAH, FL. 33014
PHONE: (305) 558-8103
FAX: (305) 558-6665
www.generalimpact.com

REV. NO	DESCRIPTION	DATE	REV. No	DESCRIPTION	DATE
1	OLD 15-164	08/08/17	3		
2			4		

DRAWN BY: L.C.
08/08/17 DATE
17-150 DRAWING No
SHEET 13 OF 14

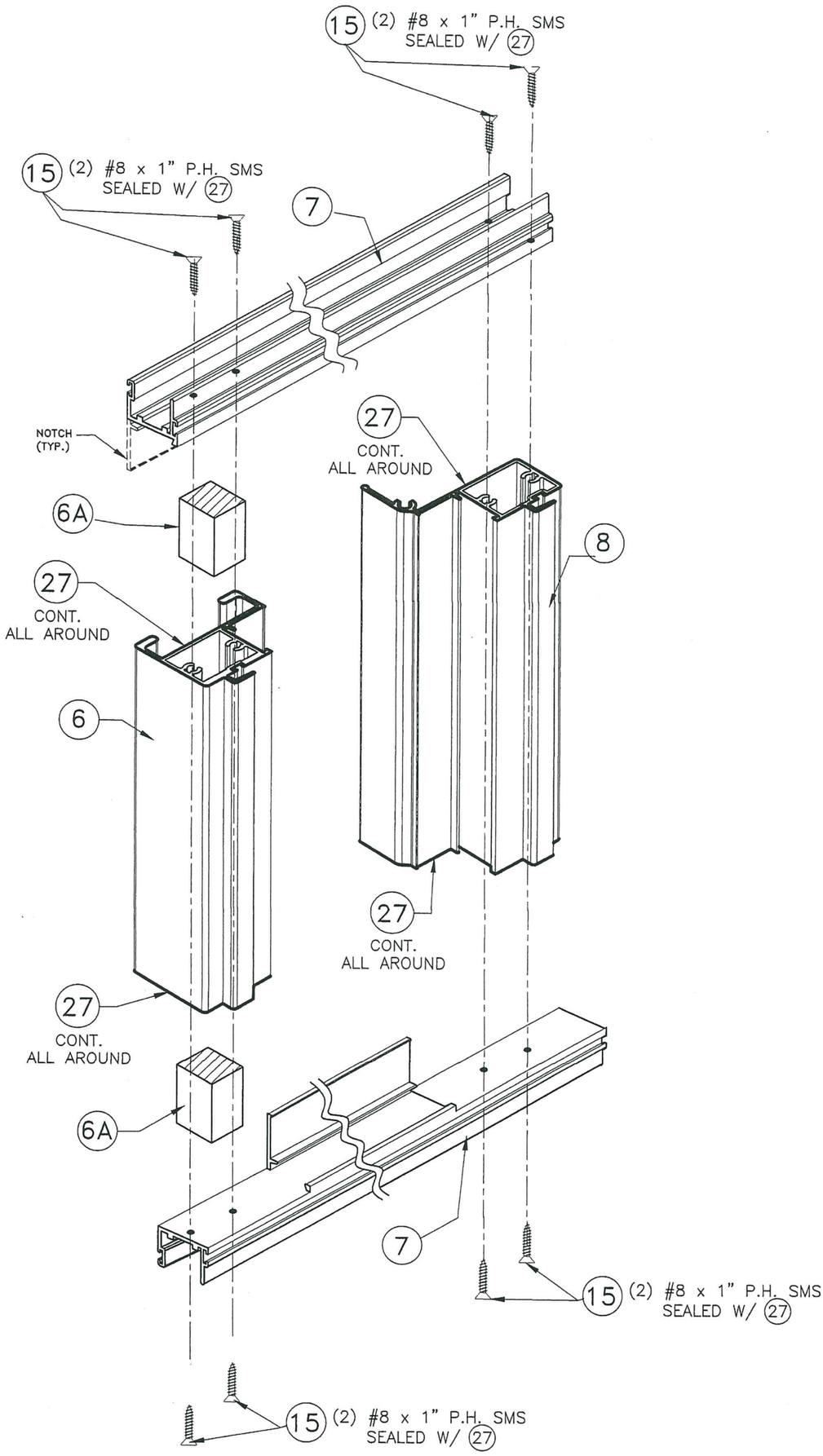

PRODUCT RENEWED
as complying with the Florida Building Code
NOA-No. 19-0911.06
Expiration Date 10/21/2024
By
Miami-Dade Product Control

CORNER CONNECTION AT VENT

SCALE: 1/2"= 1"

FLORIDA BUILDING CODE (High Velocity Hurricane Zone)

PRODUCT REVISED
as complying with the Florida Building Code
Acceptance No 17-1102.11
Expiration Date 10/21/2019
By
Miami Dade Product Control
MIAMI-DADE COUNTY

WALTER A. TILLIT JR. LICENSE No 44167 STATE OF FLORIDA PROFESSIONAL ENGINEER
P.E. SEAL/SIGNATURE/DATE

©2017 TILTECO INC.

TILTECO INC.
TILLIT TESTING & ENGINEERING COMPANY
6355 N.W. 36th. St., Ste. 305, VIRGINIA GARDENS, Fl 33166
Phone : (305)871-1530 . Fax : (305)871-1531
e-mail: tilteco@aol.com
EB-000619
WALTER A. TILLIT Jr., P.E.
FLORIDA Lic. 44167

SERIES 18000 HIGH IMPACT HORIZONTAL SLIDING WINDOW
LARGE MISSILE IMPACT RESISTANT

GENERAL IMPACT GLASS & WINDOWS
The Clear Solution
290 WEST 78 ROAD
HIALEAH, FL. 33014
PHONE: (305) 558-8103
FAX: (305) 558-6665
www.generalimpact.com

REV. NO	DESCRIPTION	DATE	REV. No	DESCRIPTION	DATE
1	OLD 15-164	08/08/17	3		
2			4		

DRAWN BY: L.C.
08/08/17 DATE
17-150 DRAWING No
SHEET 14 OF 14