MIAMI-DADE COUNTY
DEPARTMENT OF REGULATORY AND ECONOMIC RESOURCES (RER)
BOARD AND CODE ADMINISTRATION DIVISION

MIAMI–DADE COUNTY, FLORIDA
PRODUCT CONTROL SECTION
11805 SW 26 Street, Room 208
T (786) 315–2590 F (786) 315–2599
www.miamidade.gov/economy

NOTICE OF ACCEPTANCE (NOA)

RC Home Showcase, Inc.
16115 NW 52nd Avenue
Hialeah, FL 33014

SCOPE:

This NOA is being issued under the applicable rules and regulations governing the use of construction materials. The documentation submitted has been reviewed and accepted by Miami–Dade County RER–Product Control Section to be used in Miami–Dade County and other areas where allowed by the Authority Having Jurisdiction (AHJ).

This NOA shall not be valid after the expiration date stated below. The Miami–Dade County Product Control Section (In Miami–Dade County) and/ or the AHJ (in areas other than Miami–Dade County) reserve the right to have this product or material tested for quality assurance purposes. If this product or material fails to perform in the accepted manner, the manufacturer will incur the expense of such testing and the AHJ may immediately revoke, modify, or suspend the use of such product or material within their jurisdiction. RER reserves the right to revoke this acceptance, if it is determined by Miami–Dade County Product Control Section that this product or material fails to meet the requirements of the applicable building code.

This product is approved as described herein and has been designed to comply with the Florida Building Code, including the High Velocity Hurricane Zone.

DESCRIPTION: Series "RB–126"Aluminum Sliding Glass Door – L.M.I.

APPROVAL DOCUMENT: Drawing No. **RB126LMI**, titled "Series - 126 Aluminum Sliding Glass Door (L.M.I.)", sheets 1 thru 4, 4A, 4B, 5, 6, 7, 8, 8A, 8B, 9, 9A thru 13 of 13, dated July 22, 2020, prepared by MCY Engineering Inc., signed and sealed by Yipping Wang, P. E., bearing the Miami–Dade County Product Control Section Approval stamp with the Notice of Acceptance number and approval date by the Miami–Dade County Product Control Section.

MISSILE IMPACT RATING: Large and Small Missile Impact Resistant

LABELING: Each unit shall bear a permanent label with the manufacturer's name or logo, city, state, series, and following statement: "Miami–Dade County Product Control Approved", unless otherwise noted herein.

REVISION of this NOA shall be considered after a renewal application has been filed and there has been no change in the applicable building code negatively affecting the performance of this product.

TERMINATION of this NOA will occur after the expiration date or if there has been a revision or change in the materials, use, and/ or manufacture of the product or process. Misuse of this NOA as an endorsement of any product, for sales, advertising or any other purposes shall automatically terminate this NOA. Failure to comply with any section of this NOA shall be cause for termination and removal of NOA.

ADVERTISEMENT: The NOA number preceded by the words Miami–Dade County, Florida, and followed by the expiration date may be displayed in advertising literature. If any portion of the NOA is displayed, then it shall be done in its entirety.

INSPECTION: A copy of this entire NOA shall be provided to the user by the manufacturer or its distributors and shall be available for inspection at the job site at the request of the Building Official.

This NOA consists of this page 1 and evidence pages E-1 and E-2, as well as approval document mentioned above.

The submitted documentation was reviewed by **Ishaq I. Chanda, P. E.**

MIAMI-DADE COUNTY APPROVED
7/28/20

NOTICE OF ACCEPTANCE: EVIDENCE SUBMITTED

A. DRAWINGS

1. Manufacturer's die drawings and sections.
2. Drawing No. **RB126LMI**, titled "Series - 126 Aluminum Sliding Glass Door (L.M.I.)", sheets 1 thru 4, 4A, 4B, 5, 6, 7, 8, 8A, 8B, 9, 9A thru 13 of 13, dated July 22, 2020, prepared by MCY Engineering Inc., signed and sealed by Yipping Wang, P. E.

B. TESTS

1. Test reports on: 1) Air Infiltration Test, per FBC, TAS 202–94
   2) Uniform Static Air Pressure Test, Loading per FBC, TAS 202–94
   3) Water Resistance Test, per FBC, TAS 202–94
   4) Large Missile Impact Test per FBC, TAS 201–94
   5) Cyclic Wind Pressure Loading per FBC, TAS 203–94
   6) Forced Entry Test, per FBC 2411.3.2.1, and TAS 202–94

   along with marked–up drawings and installation diagram of the aluminum sliding glass door, prepared by Blackwater Technical Service, Inc. Test Report No. **BT-HSI-19-001A**, dated 01/19/20, signed and sealed by Constatin Bortes, P. E.
2. Test reports on: 1) Air Infiltration Test, per FBC, TAS 202–94
   2) Uniform Static Air Pressure Test, Loading per FBC, TAS 202–94
   3) Water Resistance Test, per FBC, TAS 202–94
   4) Large Missile Impact Test per FBC, TAS 201–94
   5) Small Missile Impact Test per FBC, TAS 201–94
   6) Cyclic Wind Pressure Loading per FBC, TAS 203–94
   7) Forced Entry Test, per FBC 2411.3.2.1, and TAS 202–94

   along with marked–up drawings and installation diagram of the aluminum sliding glass door, prepared by Blackwater Testing, Inc. Test Report No. **BT-HSI-20-001**, 03/30/20, signed and sealed by Mike D. Caldwell, P. E.

C. CALCULATIONS

1. Anchor verification calculations and structural analysis, complying with **FBC–2017 (6th Edition)** and **FBC 2020 (7th Edition)**, prepared by MCY Engineering Inc., dated 03/20/20 and revised on July 22, 2020, signed and sealed by Yipping Wang, P. E.
2. Glazing complies with ASTM E1300–09

D. QUALITY ASSURANCE

1. Miami–Dade Department of Regulatory and Economic Resources (RER).

E. MATERIAL CERTIFICATIONS

1. Notice of Acceptance No. **17-0808.02** issued to **Kuraray America, Inc.** for their "**SentryGlas® (Clear and White) Glass Interlayers**", expiring on 07/04/23.
2. Notice of Acceptance No. **19-0305.02** issued to **Kuraray America, Inc.** for their **"Kuraray** Trosifol® Ultraclear, Clear and Color PVB Glass Interlayer", expiring on 07/08/24.

Ishaq I. Chanda

Ishaq I. Chanda, P. E.
Product Control Unit Supervisor
NOA No. 20-0409.01
Expiration Date: August 06, 2025
Approval Date: August 06, 2020

F. STATEMENTS

1. Statement letter of conformance to **FBC 6th Edition (2017)** and **FBC 7th Edition (2020)** and no financial interests, MCY Engineering Inc., signed and sealed by Yipping Wang, P. E.

G. OTHERS

1. Test proposals **18-1860** dated 01/17/19 and **18-1860R-1** dated 08/30/2019 approved by RER.

Ishaq I. Chanda

Ishaq I. Chanda, P. E.
Product Control Unit Supervisor
NOA No. 20-0409.01
Expiration Date: August 06, 2025
Approval Date: August 06, 2020

SERIES RB126 ALUMINUM SLIDING GLASS DOOR (LMI)

GENERAL NOTES

1. THIS PRODUCT HAS BEEN DESIGNED AND TESTED TO COMPLY WITH THE REQUIREMENTS OF THE 2017 (6TH EDITION) / 2020 (7TH EDITION) FLORIDA BUILDING CODE, INCLUDING THE HIGH VELOCITY HURRICANE ZONE (HVHZ) AND HAS BEEN ACCEPTED TO BE USED IN MIAMI-DADE COUNTY AND OTHER AREAS WHERE ALLOWED BY THE AUTHORITY HAVING JURISDICTION (AHJ)
2. THIS PRODUCT IS RATED LARGE MISSILE IMPACT. HURRICANE PROTECTION SYSTEM (SHUTTERS) ARE NOT REQUIRED
3. WOOD BUCKS DEPICTED AS "1X", ARE BUCKS WHOSE TOTAL THICKNESS IS LESS THAN 3/4" AND ARE OPTIONAL IF PRODUCT CAN BE INSTALLED DIRECTLY TO SUBSTRATE. WOOD BUCKS DEPICTED AS "2X", ARE BUCKS WHOSE TOTAL THICKNESS IS 1-1/2" OR GREATER. THE DESIGN OF WOOD BUCKS AND BUCK FASTENERS MUST BE ENGINEERED BY OTHERS AND MUST BE INSTALLED ADEQUATELY TO TRANSFER THE LOADS IMPOSED ON THEM BY THE DOOR SYSTEM TO THE BUILDING STRUCTURE AND TO BE REVIEWED BY THE BUILDING OFFICIAL FOR APPROVAL.
4. SHIMS USED FOR PRODUCT'S INSTALLATION SHALL BE HIGH IMPACT, NON-METALLIC, NON-COMPRESSIBLE AND ABLE TO TRANSFER APPLIED LOADS
5. DISSIMILAR MATERIALS THAT COME INTO CONTACT, INCLUDING STEEL OR METAL SCREWS, SHALL MEET THE REQUIREMENTS OF THE FLORIDA BUILDING CODE FOR CORROSION RESISTANCE
6. ANCHORS MUST BE CORROSION RESISTANT, SPACED AS SHOWN IN DETAILS AND INSTALLED IN ACCORDANCE WITH THE MANUFACTURER'S INSTRUCTIONS. ANCHOR EMBEDMENT TO BASE MATERIAL SHALL BE BEYOND WALL DRESSING OR STUCCO AND AS SPECIFIED IN THESE INSTRUCTIONS
7. THIS APPROVAL APPLIES TO INSTALLATIONS OF SINGLE UNITS ONLY, FOR SIDE-BY-SIDE COMBINATIONS OF THIS PRODUCT , STEEL TUBE OR MIAMI DADE APPROVED MULLION TO BE USE IN BETWEEN. SUPPORTING STRUCTURE TO BE REVIEWED BY AJH. LOWER DESIGN PRESSURE FROM WINDOW, DOOR OR MULLION WILL APPLY TO THE ENTIRE SYSTEM
8. INSTALLATION CONDITIONS DEPICTED IN THESE INSTRUCTIONS ARE GENERIC AND MAY NOT REFLECT ACTUAL CONDITIONS FOR A SPECIFIC PROJECT. SITE-SPECIFIC CONDITIONS THAT DEVIATE FROM THE CONDITIONS DETAILED HEREIN MUST BE PREPARED BY A REGISTERED ENGINEER OR ARCHITECT, WHO WILL BE RESPONSIBLE FOR THE PROPER USE OF THIS EVALUATION AND EXAMINED BY A BUILDING OFFICIAL

DRAWING INDEX

SHEET 1: GENERAL NOTES / TYPICAL ELEVATION

SHEET 2: ANCHOR LAYOUT

SHEET 3, 4, 4A, 4B, 5: VERTICAL SECTIONS / HEAD & SILL INSTALLATION OPTIONS

SHEET 6, 6A, 7: HORIZONTAL SECTIONS / JAMB INSTALLATION OPTIONS

SHEET 8, 8A, 8B: APPROVED CONFIGURATIONS / REINFORCEMENT LEVELS

SHEET 9: DESIGN LOAD CAPACITY CHART

SHEET 9A: ANCHOR LOAD CAPACITY CHART

SHEET 10: BILL OF MATERIALS / GLAZING OPTIONS

SHEET 11, 12: DOOR COMPONENTS

SHEET 13: CORNER CONSTRUCTION DETAILS

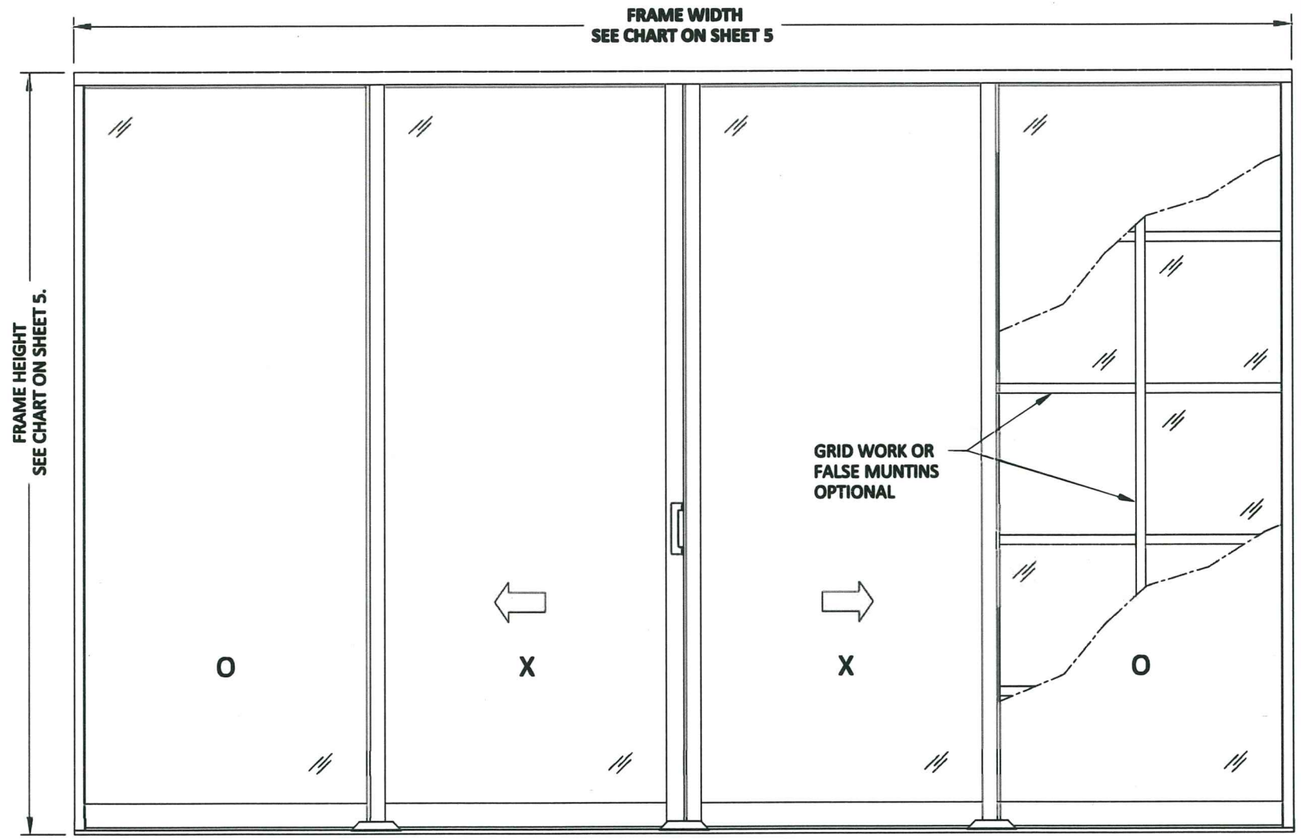

TYPICAL ELEVATION

MAX. DESIGN PRESSURE (PSF)	
EXTERIOR	INTERIOR
+135.0	-135.0

THIS DOOR IS RATED LARGE AND SMALL MISSILE IMPACT (SHUTTERS ARE NOT REQUIRED)

ALTERNATE SIZE UNITS:

MAXIMUM FRAME AREA OF DOORS NOT TO EXCEED TESTED FRAME AREA OF 203.46 SQ. FT.
(SEE CHARTS, SHEET 9 AND 9A)

Approved as complying with the Florida Building Code
Date AUG 06, 2020
NOA# 20-0409.01
Miami Dade Product Control
By

MCY ENGINEERING, INC.
GLAZING CONSULTANTS
12781 MIRAMAR PKWY. STE 301
MIRAMAR, FL. 33027
P: 305.271.0117
P: 786.360.2786
www.MCYEngineering.com
mcy@mcyengineering.com

REVIEWED FOR STRUCTURAL COMPLIANCE ONLY BY

YIPING WANG LICENSE No 55983 STATE OF FLORIDA PROFESSIONAL ENGINEER
JUL 2 2 2020

YIPING WANG, P.E.
FL #55983 C.A.N. 28677

16115 NW 52ND AVENUE
MIAMI GARDENS, FL 33014
TEL: (305) 392-6214
FAX: (305) 260-6432
RC HOME SHOWCASE ALUMINUM WINDOWS AND DOORS

SERIES RB126 ALUMINUM SLIDING GLASS DOOR (LMI)

GENERAL NOTES / TYPICAL ELEVATION

REV.	DATE	BY	DESCRIPTION
-	-	-	-

DATE: 11-15-19
SCALE: -
DRAWN: RP
CHECKED: -

DRAWING No.
RB126LMI

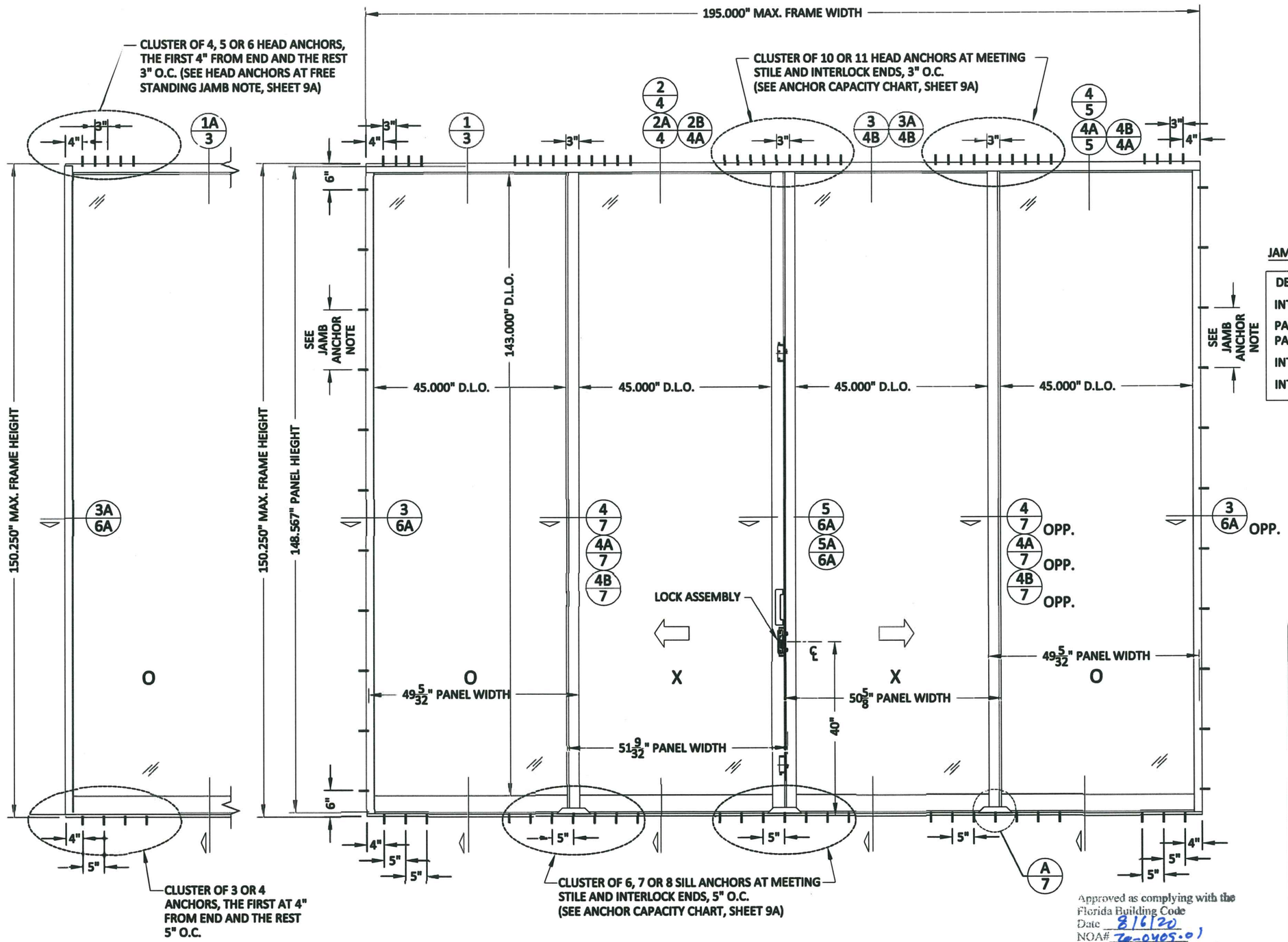

FREE STANDING JAMB OPTION WITHOUT ANCHORS AT JAMBS

TYPICAL ELEVATION

SEE SHEET 8 TO 8B FOR LIGHT - MEDIUM & HEAVY STILE OPTIONS
SEE SHEET 9 OF 13 FOR APPROVED CAPACITIES

JAMB ANCHOR SPACING NOTE

DESIGN LOAD : 135 PSF

INTO CONCRETE OR GROUT FILLED BLOCK:

PANEL WIDTH ≤ 51": 15" O.C.
PANEL WIDTH ≥ 51": 7-1/2" O.C.

INTO METAL: 15" O.C.

INTO WOOD OR HOLLOW BLOCK: 7-1/2" O.C.

Approved as complying with the Florida Building Code
Date 8/6/20
NOA# 20-0405.01
Miami Dade Product Control
By Yiping L. Wang

MCY ENGINEERING, INC.
GLAZING CONSULTANTS
12781 MIRAMAR PKWY. STE 301
MIRAMAR, FL 33027
P: 305.271.0117
P: 786.360.2786
www.MCYEngineering.com
mcy@mcyengineering.com

REVIEWED FOR STRUCTURAL COMPLIANCE ONLY BY

YIPING WANG LICENSE No 55983 STATE OF FLORIDA PROFESSIONAL ENGINEER
JUL 2 2 2020

YIPING WANG, P.E.
FL #55983 C.A.N. 28677

16115 NW 52ND AVENUE
MIAMI GARDENS, FL 33014
TEL: (305) 392-6214
FAX: (305) 260-6432
RC HOME SHOWCASE ALUMINUM WINDOWS AND DOORS

SERIES RB126 ALUMINUM SLIDING GLASS DOOR (LMI)

ANCHOR LAYOUT

REV.	DATE	BY	DESCRIPTION
-	-	-	-

DATE: 11-15-19
SCALE: 1:24
DRAWN: RP
CHECKED: -

DRAWING No. RB126LMI

SHEET 2 OF 13

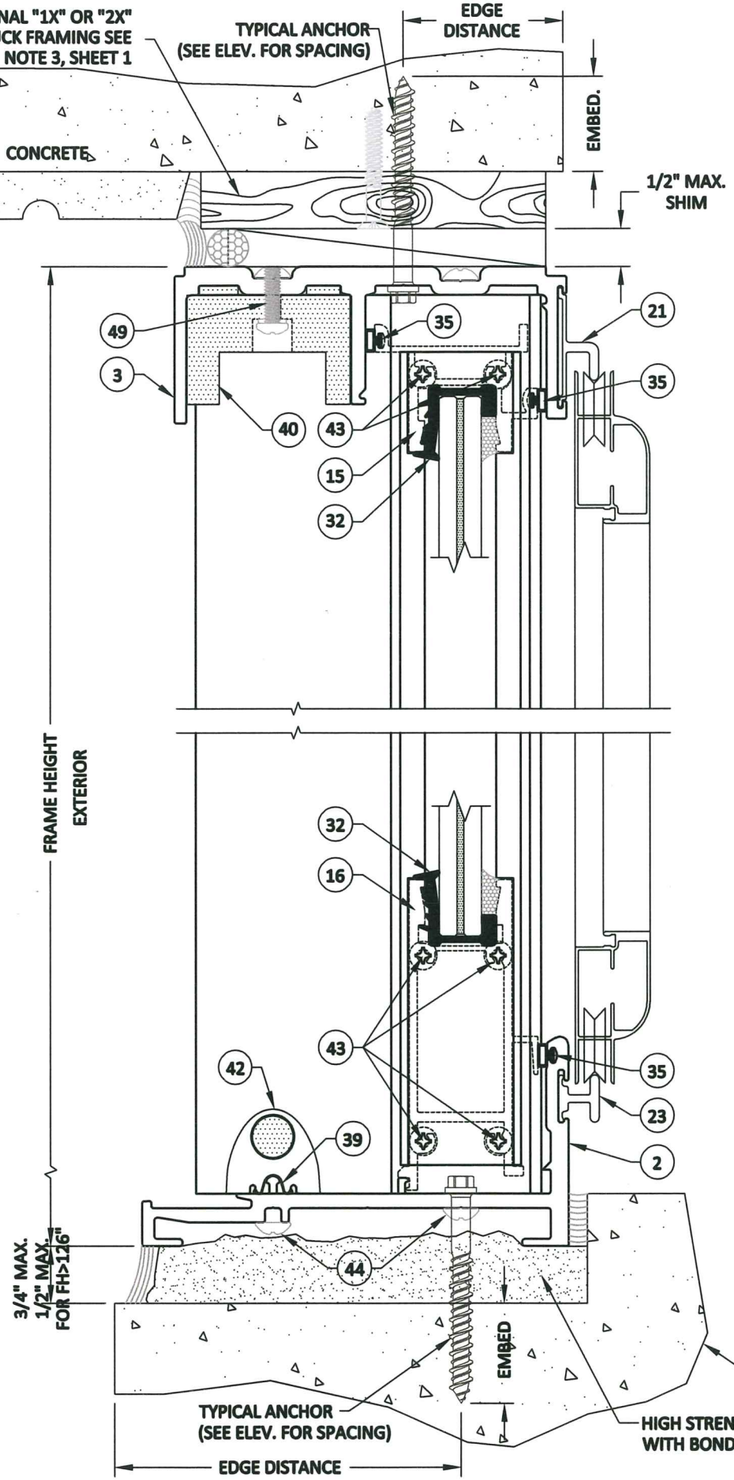

1/3 SECTION AT ANCHORED JAMB

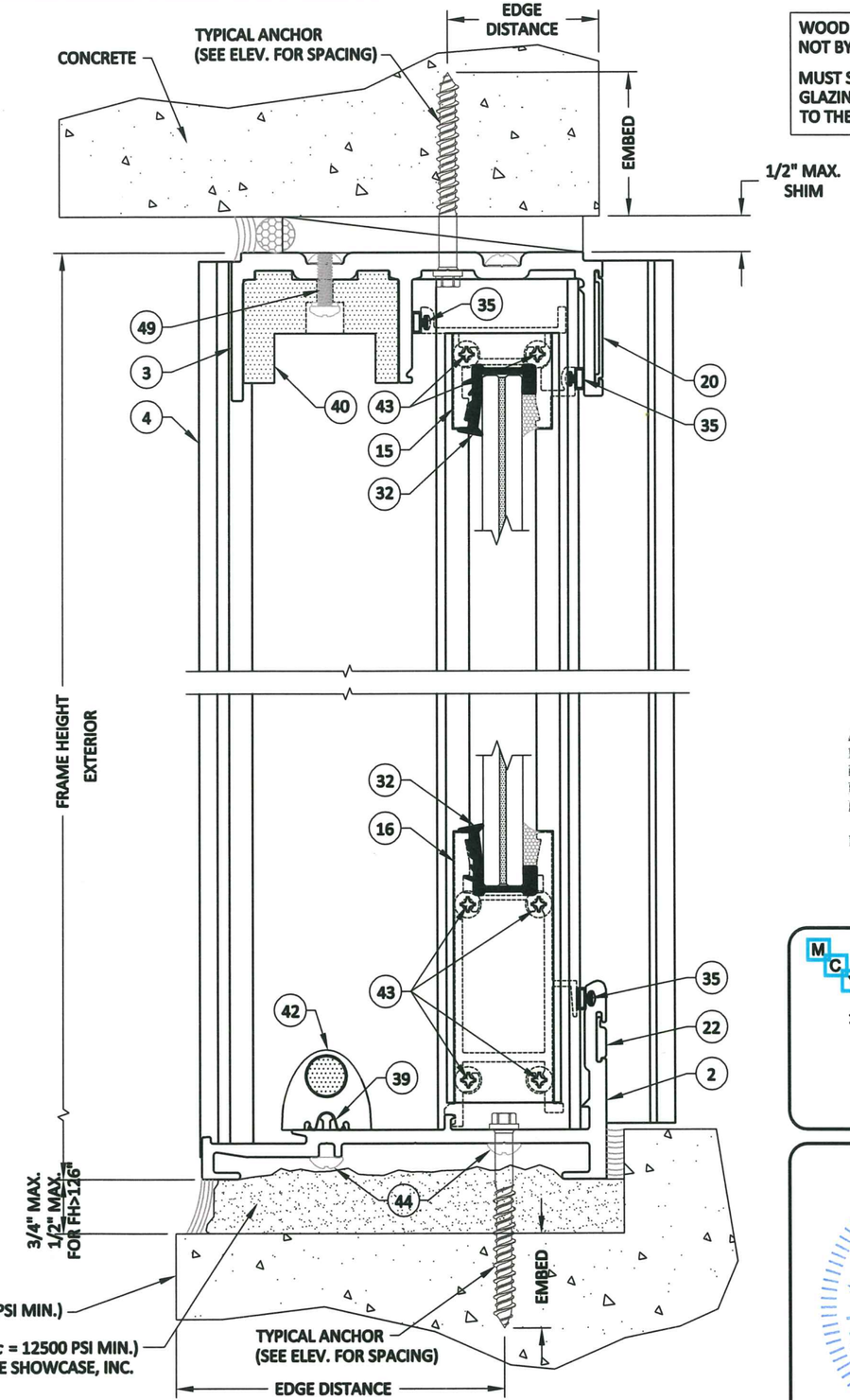

1A/3 SECTION AT FREE STANDING JAMB (NO SCREEN OPTION SHOWN)

WOOD BUCKS AND METAL STRUCTURES NOT BY RC HOME SHOWCASE, INC.

MUST SUSTAIN LOADS IMPOSED BY THE GLAZING SYSTEM AND TRANSFER THEM TO THE BUILDING STRUCTURE

Approved as complying with the Florida Building Code
Date 8/6/20
NOA# 20-0465.01
Miami Dade Product Control
By Ishwar I. Chandra

MCY ENGINEERING, INC.
GLAZING CONSULTANTS
12781 MIRAMAR PKWY. STE 301
MIRAMAR, FL. 33027
P: 305.271.0117
P: 786.360.2786
www.MCYEngineering.com
mcy@mcyengineering.com

REVIEWED FOR STRUCTURAL COMPLIANCE ONLY BY
YIPING WANG LICENSE No 55983 STATE OF FLORIDA PROFESSIONAL ENGINEER
JUL 22 2020
YIPING WANG, P.E.
FL #55983 C.A.N. 28677

16115 NW 52ND AVENUE
MIAMI GARDENS, FL 33014
TEL: (305) 392-6214
FAX: (305) 260-6432

RC HOME SHOWCASE ALUMINUM WINDOWS AND DOORS

SERIES RB126 ALUMINUM SLIDING GLASS DOOR (LMI)
VERTICAL SECTIONS
HEAD / SILL INSTALLATION OPTIONS

REV.	DATE	BY	DESCRIPTION
-	-	-	-

DATE: 11-15-19
SCALE: 1:2
DRAWN: RP
CHECKED: -

DRAWING No. RB126LMI

SHEET 3 OF 13

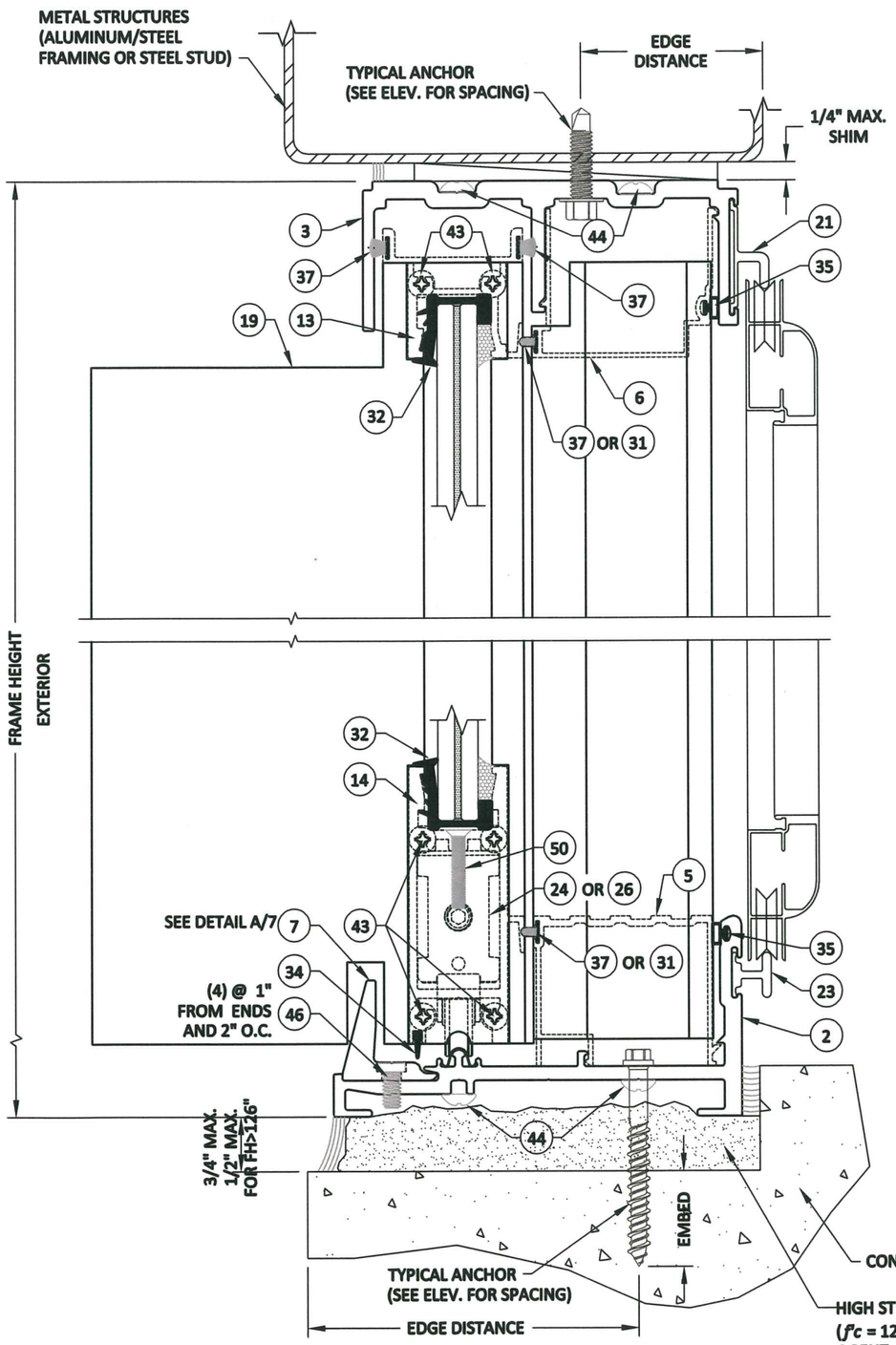

2/4 SECTION AT HEAVY REINFORCED INTERLOCK

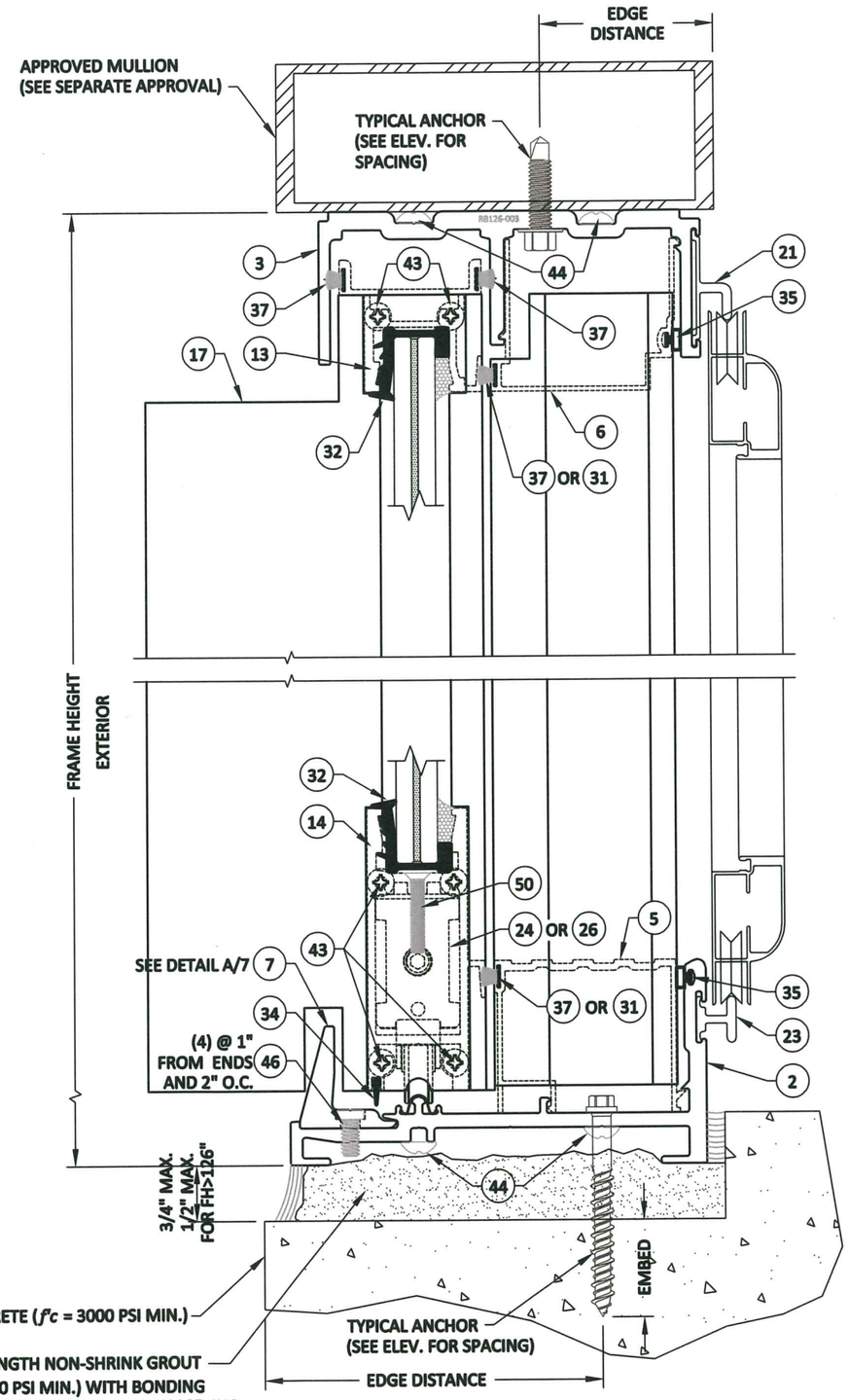

2A/4 SECTION AT LIGHT REINFORCED INTERLOCK

WOOD BUCKS AND METAL STRUCTURES NOT BY RC HOME SHOWCASE, INC.

MUST SUSTAIN LOADS IMPOSED BY THE GLAZING SYSTEM AND TRANSFER THEM TO THE BUILDING STRUCTURE

Approved as complying with the Florida Building Code
Date 8/6/20
NOA# 20-0409.01
Miami Dade Product Control
By

MCY ENGINEERING, INC.
GLAZING CONSULTANTS
12781 MIRAMAR PKWY. STE 301
MIRAMAR, FL. 33027
P: 305.271.0117
P: 786.360.2786
www.MCYEngineering.com
mcy@mcyengineering.com

REVIEWED FOR STRUCTURAL COMPLIANCE ONLY BY

YIPING WANG LICENSE No 55983 STATE OF FLORIDA PROFESSIONAL ENGINEER
JUL 22 2020

YIPING WANG, P.E.
FL #55983 C.A.N. 28677

16115 NW 52ND AVENUE
MIAMI GARDENS, FL 33014
TEL: (305) 392-6214
FAX: (305) 260-6432
RC HOME SHOWCASE ALUMINUM WINDOWS AND DOORS

SERIES RB126 ALUMINUM SLIDING GLASS DOOR (LMI)

VERTICAL SECTIONS
HEAD / SILL INSTALLATION OPTIONS

REV.	DATE	BY	DESCRIPTION
-	-	-	-

DATE: 11-15-19
SCALE: 1:2
DRAWN: RP
CHECKED: -

DRAWING No. RB126LMI

SHEET 4 OF 13

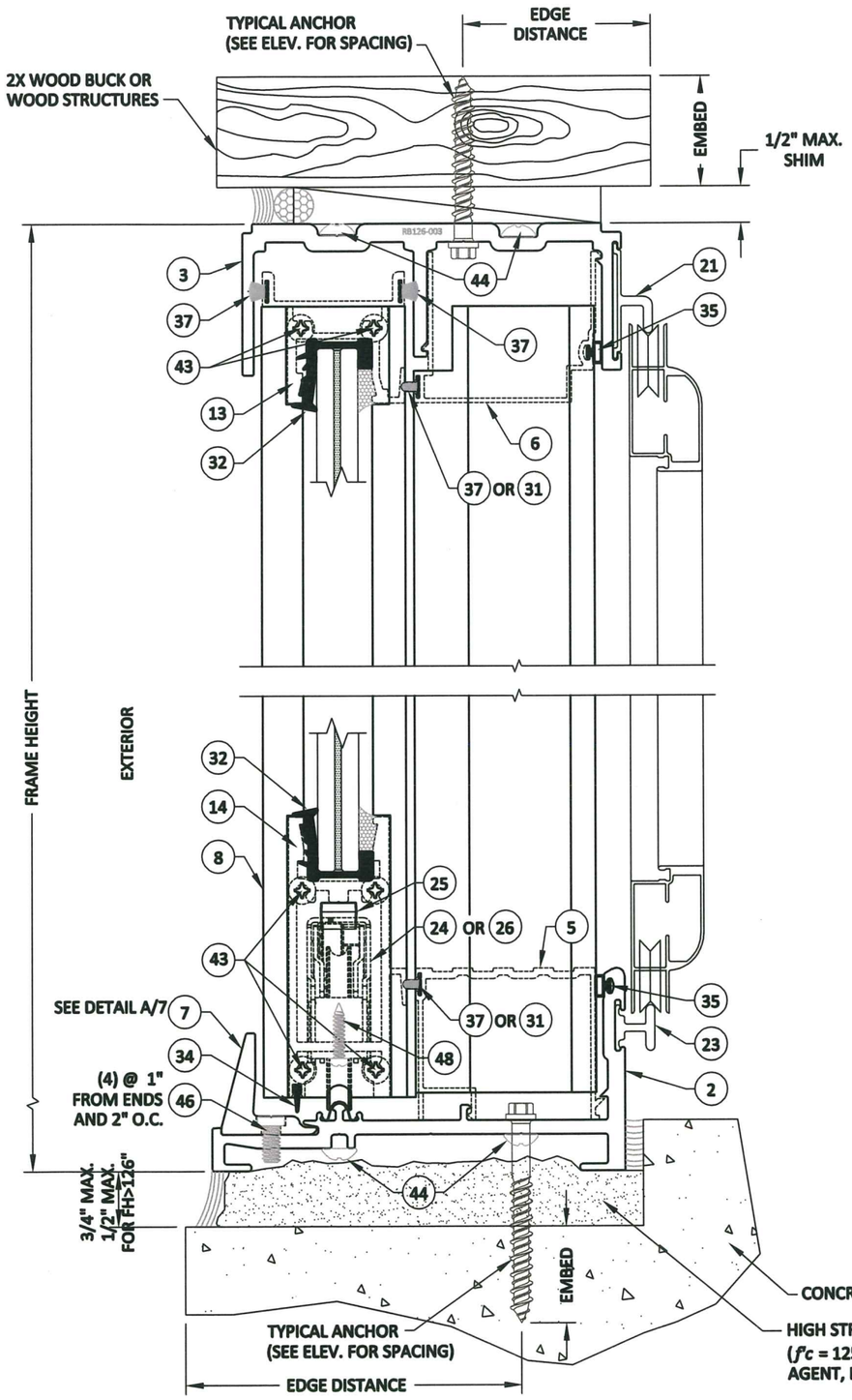

2B/4A SECTION AT NON-REINFORCED INTERLOCK

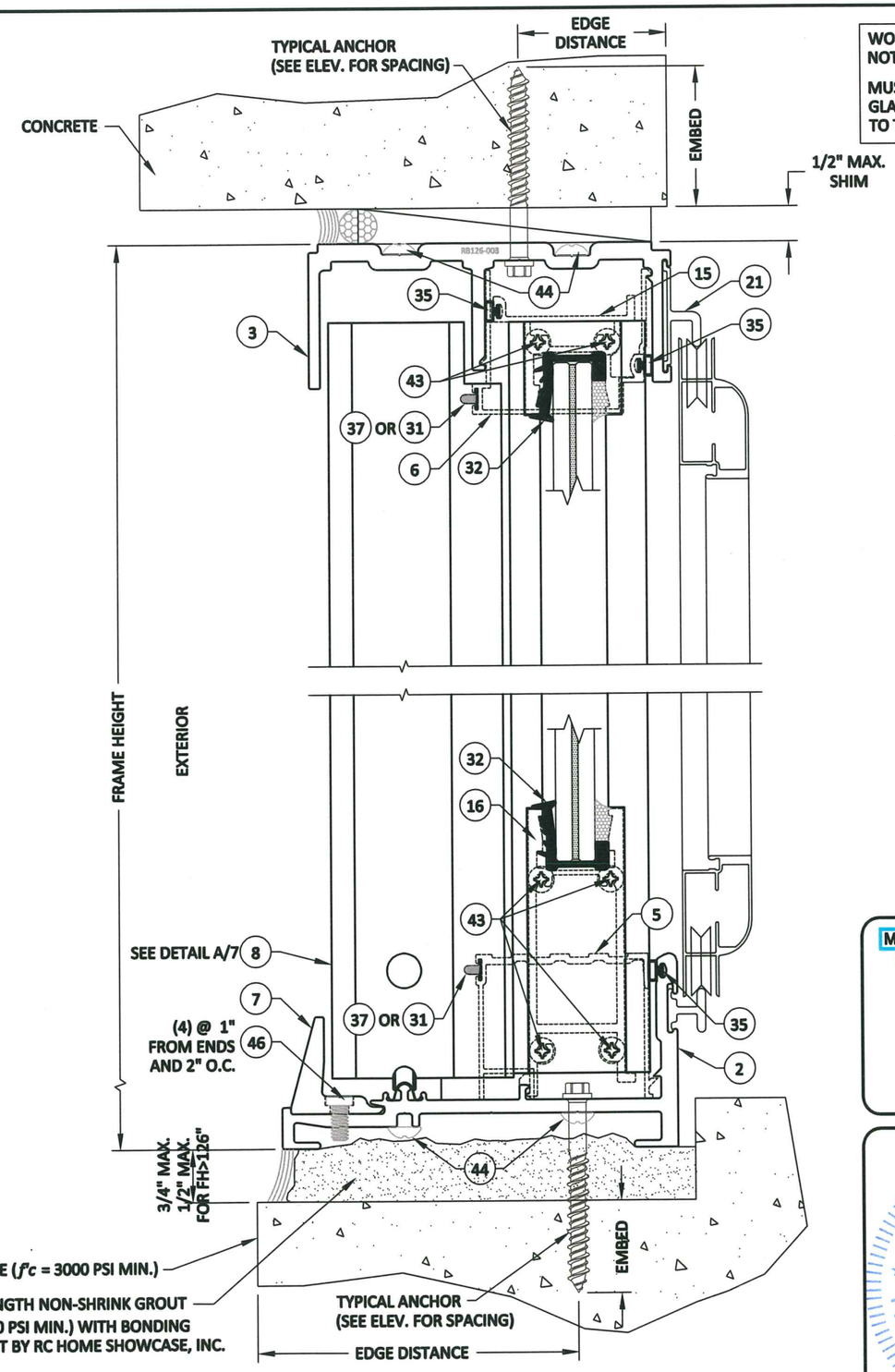

4B/4A SECTION AT NON-REINFORCED INTERLOCK

CONCRETE ($f'c$ = 3000 PSI MIN.)

HIGH STRENGTH NON-SHRINK GROUT ($f'c$ = 12500 PSI MIN.) WITH BONDING AGENT, NOT BY RC HOME SHOWCASE, INC.

WOOD BUCKS AND METAL STRUCTURES NOT BY RC HOME SHOWCASE, INC.

MUST SUSTAIN LOADS IMPOSED BY THE GLAZING SYSTEM AND TRANSFER THEM TO THE BUILDING STRUCTURE

Approved as complying with the Florida Building Code
Date 8/6/20
NOA# 20-0409.01
Miami Dade Product Control
By

MCY ENGINEERING, INC.
GLAZING CONSULTANTS
12781 MIRAMAR PKWY. STE 301
MIRAMAR, FL. 33027
P: 305.271.0117
P: 786.360.2786
www.MCYEngineering.com
mcy@mcyengineering.com

REVIEWED FOR STRUCTURAL COMPLIANCE ONLY BY

YIPING WANG LICENSE No 55983 STATE OF FLORIDA PROFESSIONAL ENGINEER
JUL 2 2 2020

YIPING WANG, P.E.
FL #55983 C.A.N. 28677

16115 NW 52ND AVENUE
MIAMI GARDENS, FL 33014
TEL: (305) 392-6214
FAX: (305) 260-6432
RC HOME SHOWCASE ALUMINUM WINDOWS AND DOORS

SERIES RB126 ALUMINUM SLIDING GLASS DOOR (LMI)

VERTICAL SECTIONS HEAD / SILL INSTALLATION OPTIONS

REV.	DATE	BY	DESCRIPTION
-	-	-	-

DATE: 11-15-19
SCALE: 1:2
DRAWN: RP
CHECKED: -

DRAWING No. RB126LMI

SHEET 4A OF 13

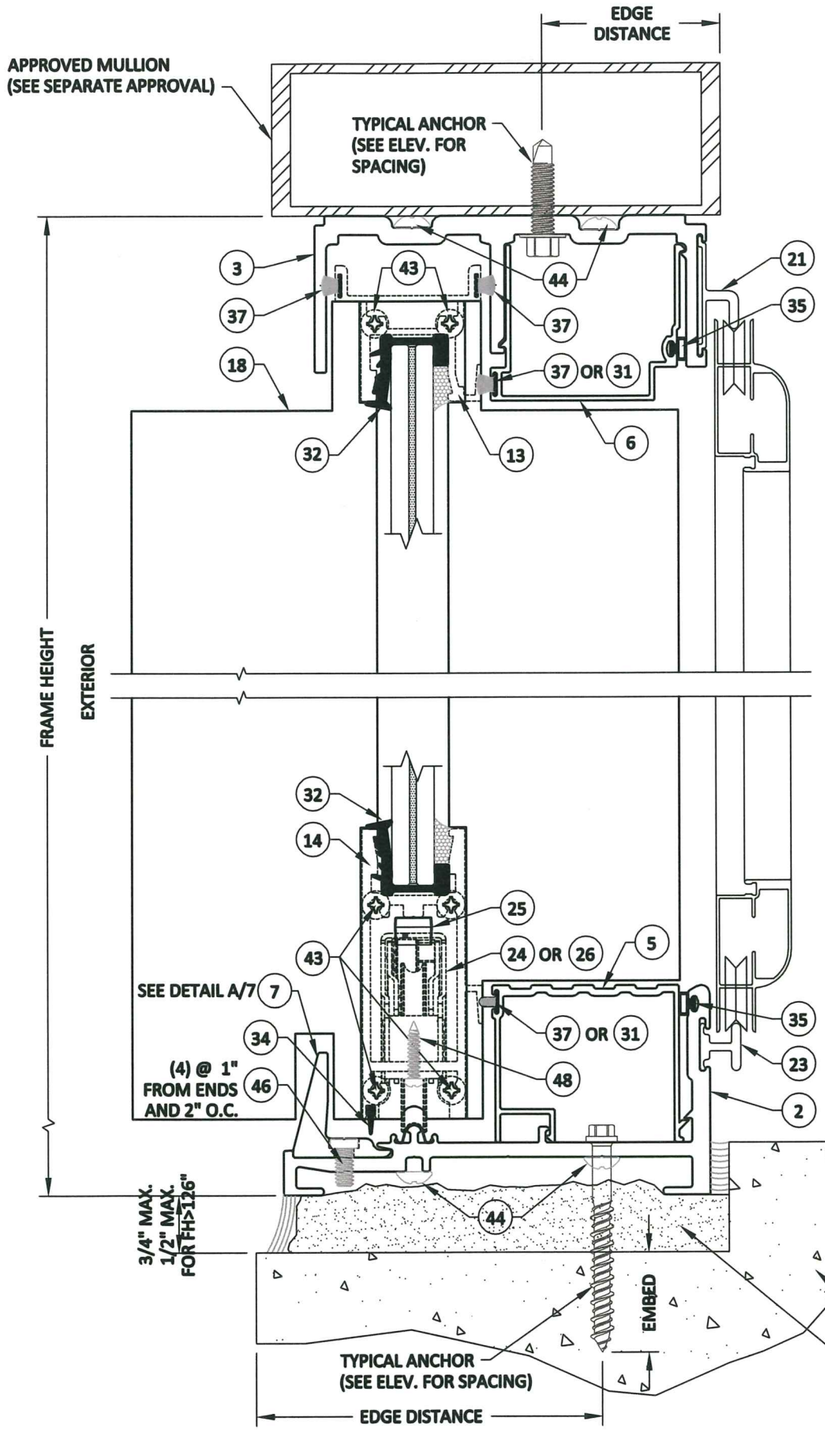

3/4B SECTION AT HEAVY DUTY MEETING STILE

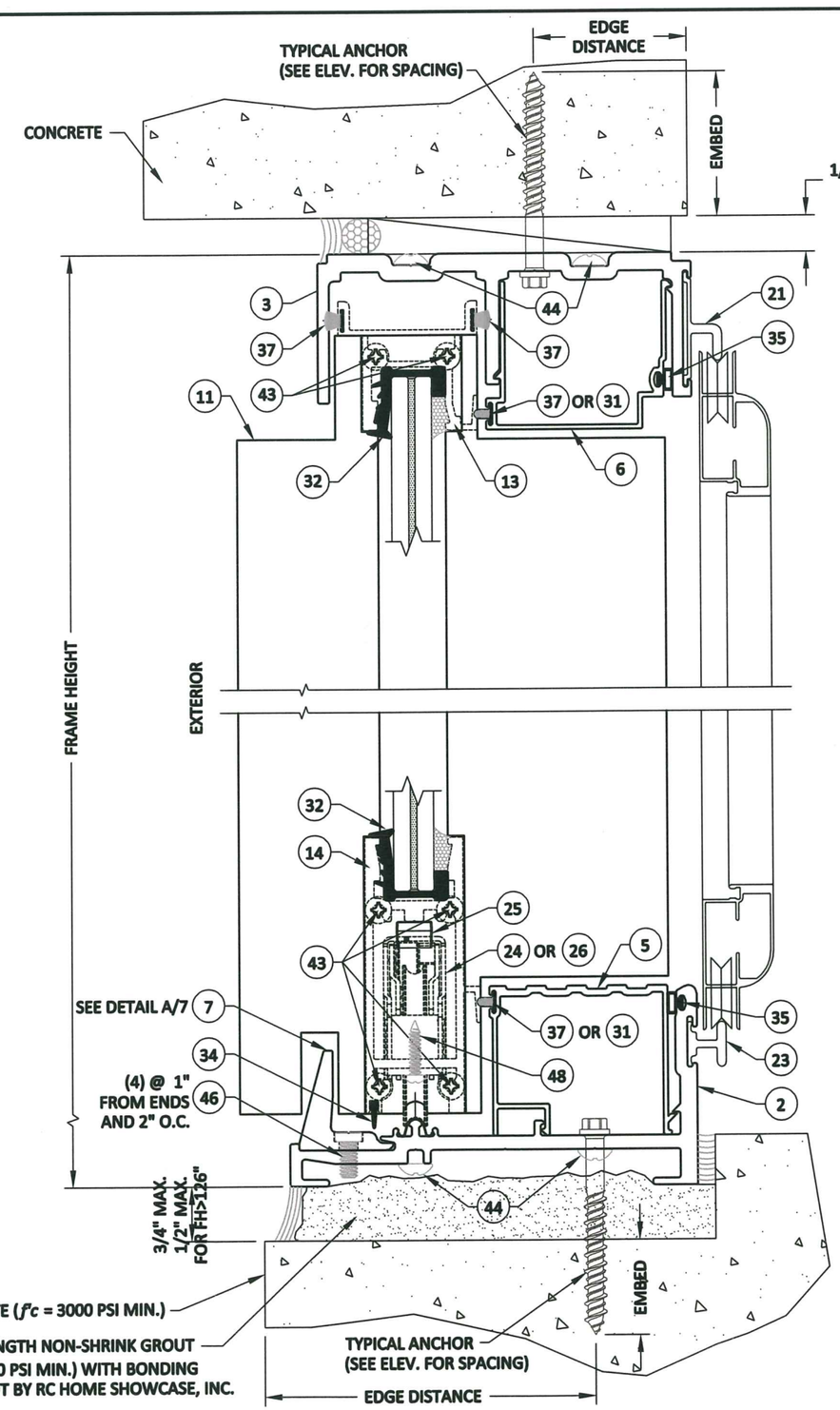

3A/4B SECTION AT LIGHT DUTY MEETING STILE

WOOD BUCKS AND METAL STRUCTURES NOT BY RC HOME SHOWCASE, INC.

MUST SUSTAIN LOADS IMPOSED BY THE GLAZING SYSTEM AND TRANSFER THEM TO THE BUILDING STRUCTURE

Approved as complying with the Florida Building Code
Date 8/6/20
NOA# 20-0409.01
Miami Dade Product Control
By

MCY ENGINEERING, INC.
GLAZING CONSULTANTS
12781 MIRAMAR PKWY. STE 301
MIRAMAR, FL. 33027
P: 305.271.0117
P: 786.360.2786
www.MCYEngineering.com
mcy@mcyengineering.com

REVIEWED FOR STRUCTURAL COMPLIANCE ONLY BY

YIPING WANG LICENSE No 55983 STATE OF FLORIDA PROFESSIONAL ENGINEER

YIPING WANG, P.E.
FL #55983 C.A.N. 28677

16115 NW 52ND AVENUE
MIAMI GARDENS, FL 33014
TEL: (305) 392-6214
FAX: (305) 260-6432
RC HOME SHOWCASE ALUMINUM WINDOWS AND DOORS

SERIES RB126 ALUMINUM SLIDING GLASS DOOR (LMI)

VERTICAL SECTIONS HEAD / SILL INSTALLATION OPTIONS

REV.	DATE	BY	DESCRIPTION
-	-	-	-

DATE: 11-15-19	
SCALE: 1:2	
DRAWN: RP	
CHECKED: -	

DRAWING No. RB126LMI

SHEET 4B OF 13

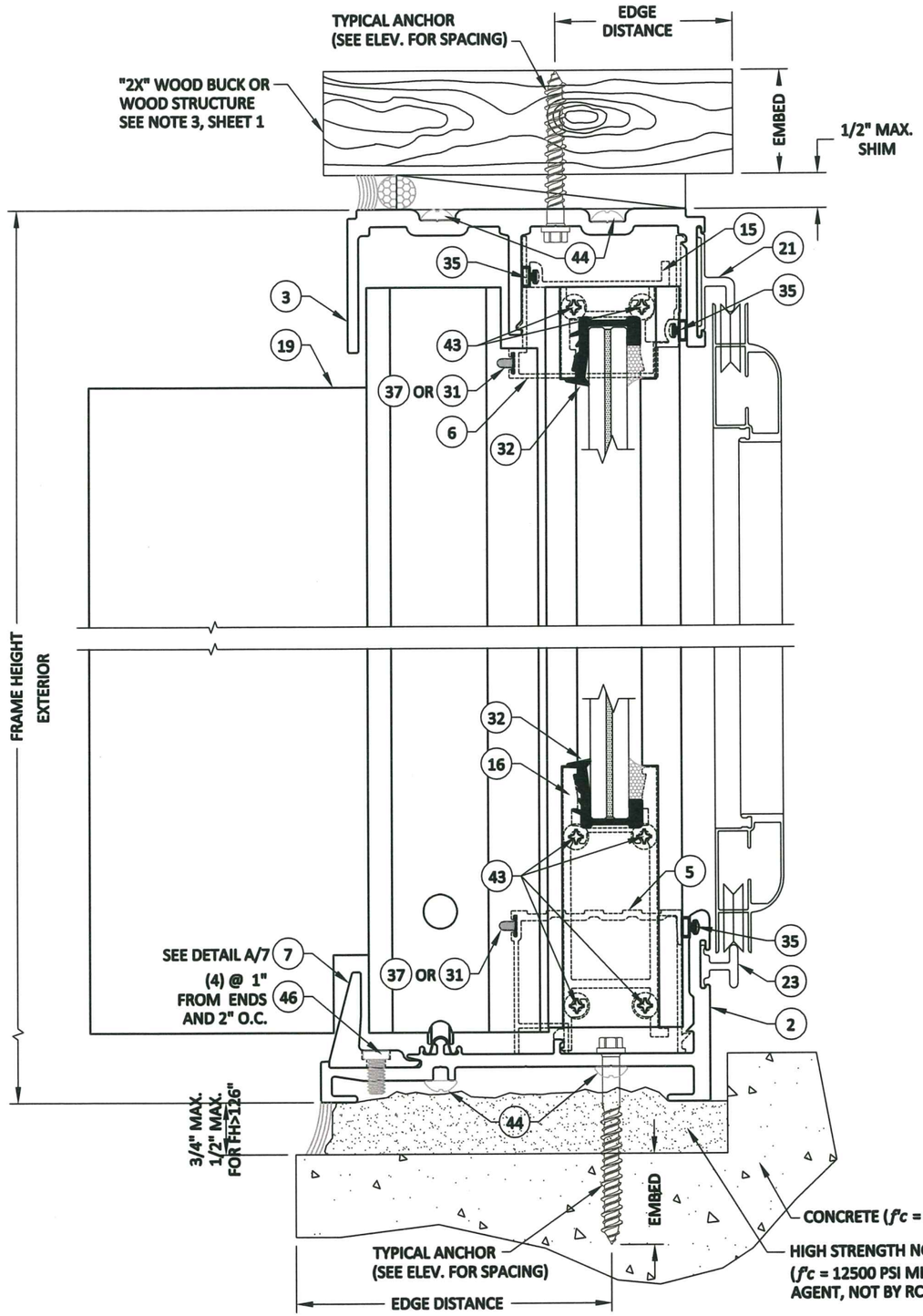

4/5 SECTION AT HEAVY REINFORCED INTERLOCK

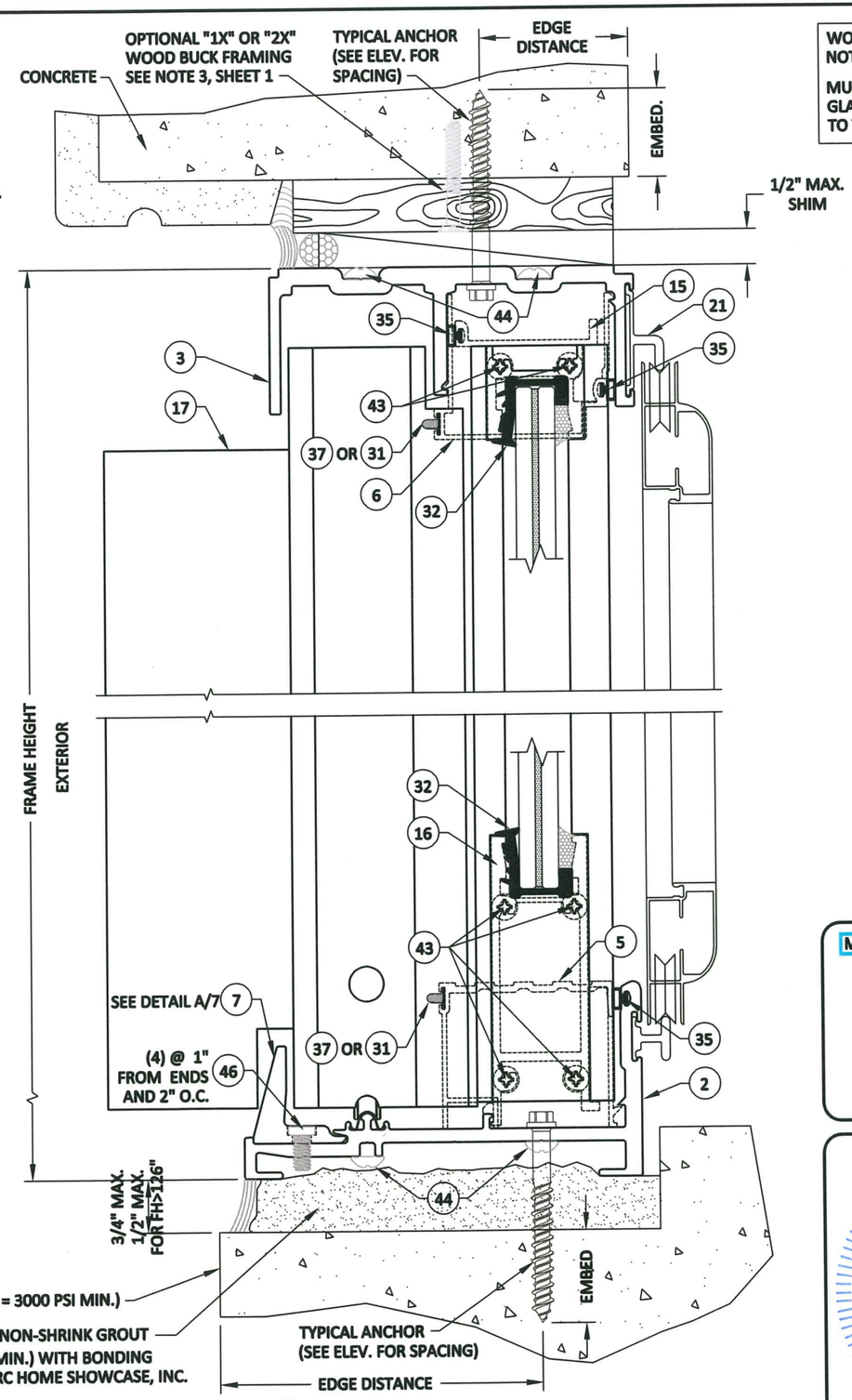

4A/5 SECTION AT LIGHT REINFORCED INTERLOCK

WOOD BUCKS AND METAL STRUCTURES NOT BY RC HOME SHOWCASE, INC.

MUST SUSTAIN LOADS IMPOSED BY THE GLAZING SYSTEM AND TRANSFER THEM TO THE BUILDING STRUCTURE

Approved as complying with the
Florida Building Code
Date 8/6/20
NOA# 20-0409.01
Miami Dade Product Control
By

MCY ENGINEERING, INC.
GLAZING CONSULTANTS
12781 MIRAMAR PKWY. STE 301
MIRAMAR, FL. 33027
P: 305.271.0117
P: 786.360.2786
www.MCYEngineering.com
mcy@mcyengineering.com

REVIEWED FOR STRUCTURAL COMPLIANCE ONLY BY

YIPING WANG LICENSE JUL 2 2 2020 No 55983 STATE OF FLORIDA PROFESSIONAL ENGINEER

YIPING WANG, P.E.
FL #55983 C.A.N. 28677

16115 NW 52ND AVENUE
MIAMI GARDENS, FL 33014
TEL: (305) 392-6214
FAX: (305) 260-6432
RC HOME SHOWCASE ALUMINUM WINDOWS AND DOORS

SERIES RB126 ALUMINUM SLIDING GLASS DOOR (LMI)

VERTICAL SECTIONS
HEAD / SILL INSTALLATION OPTIONS

REV.	DATE	BY	DESCRIPTION
-	-	-	-

DATE: 11-15-19
SCALE: 1:2
DRAWN: RP
CHECKED: -

DRAWING No.
RB126LMI

SHEET
5 OF 13

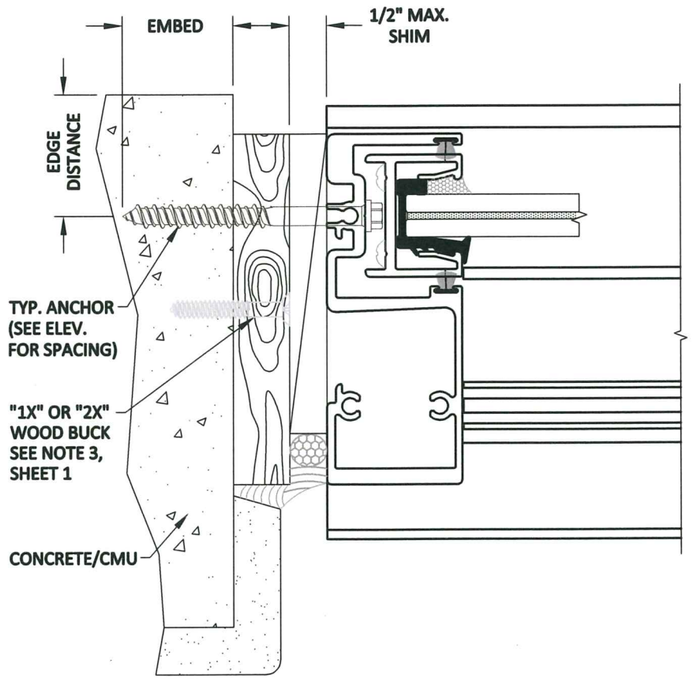

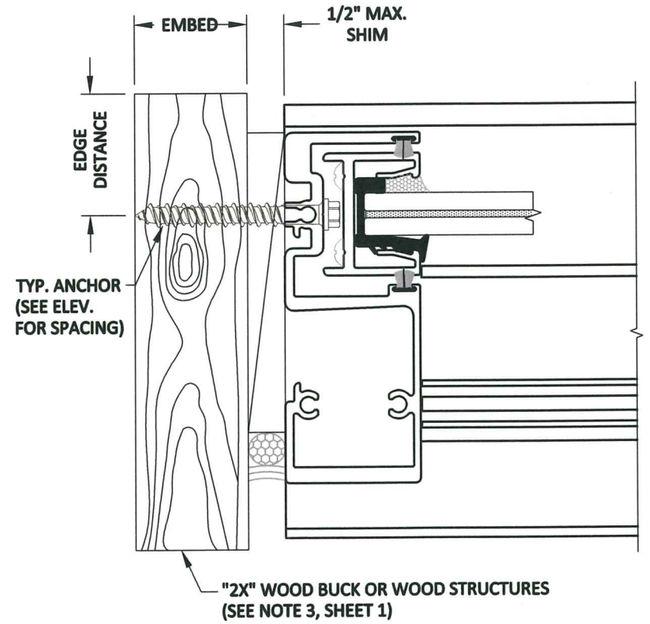

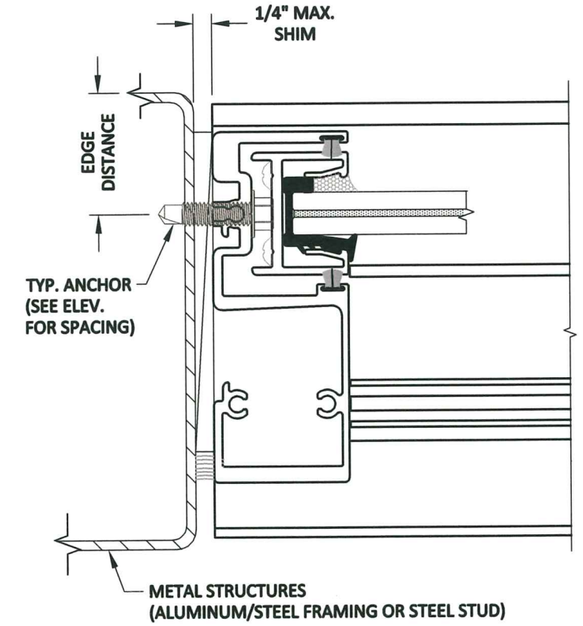

WOOD BUCKS AND METAL STRUCTURES NOT BY RC HOME SHOWCASE, INC. MUST SUSTAIN LOADS IMPOSED BY THE GLAZING SYSTEM AND TRANSFER THEM TO THE BUILDING STRUCTURE

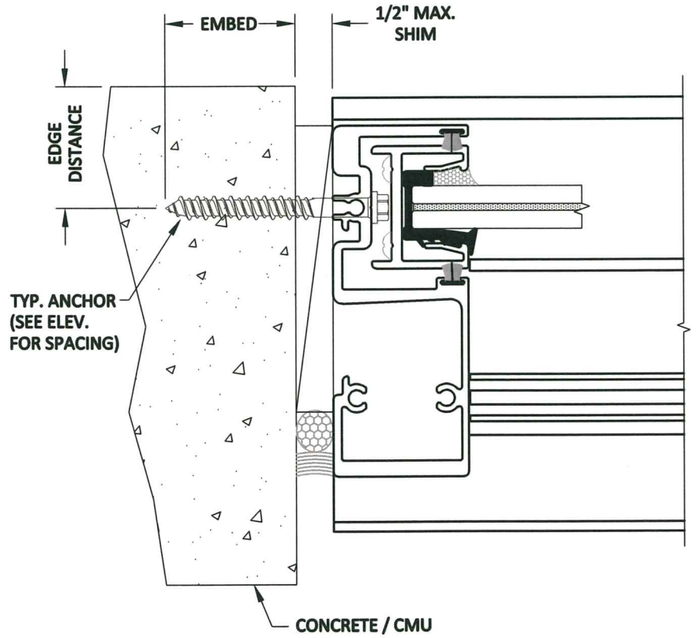

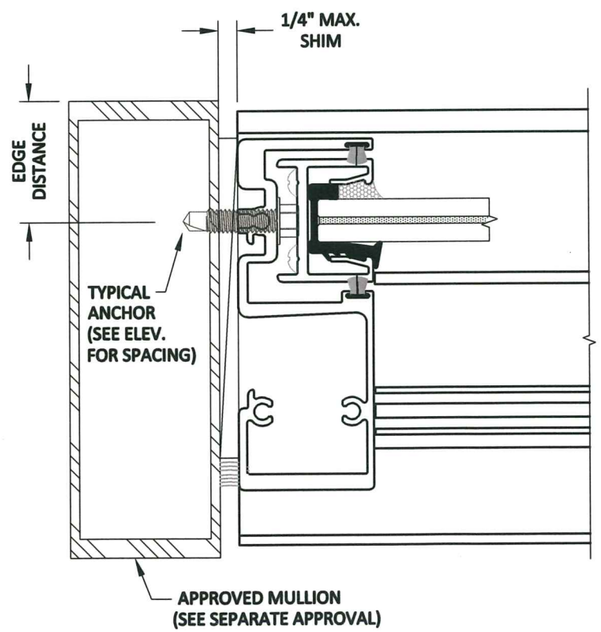

TYPICAL ANCHORS

TYPE "A" : Ø5/16" ELCO® ULTRACON® (*Fu* = 177 KSI , *Fy* = 155 KSI)

INTO "2X" WOOD BUCK OR WOOD STRUCTURES:
1-1/2" MIN. PENETRATION INTO WOOD (HEAD/JAMBS)

THRU "1X" OR "2X" WOOD BUCK INTO CONCRETE OR BLOCKS:
2" MIN. PENETRATION INTO CONCRETE (HEAD/JAMBS)
1-3/4" MIN. PENETRATION INTO GROUT FILLED BLOCKS (JAMBS)
1-1/4" MIN. INTO HOLLOW BLOCKS (JAMBS)

TYPE "B" : Ø5/16" ELCO® ULTRACON® (*Fu* = 177 KSI , *Fy* = 155 KSI)

DIRECTLY INTO CONCRETE OR BLOCKS:
2" MIN. PENETRATION INTO CONCRETE (HEAD/SILL/JAMBS)
1-3/4" MIN. INTO GROUT FILLED BLOCKS (JAMBS)
1-1/4" MIN. INTO HOLLOW BLOCKS (JAMBS)

TYPE "C" : Ø5/16" TEK OR SELF-DRILLING SCREW (GRADE 2 CRS)

INTO METAL STRUCTURES AND APPROVED MULLIONS (HEAD/JAMBS)
STEEL: 1/8" THK. (11 GA) MIN. (*Fy* = 36 KSI MIN.)
ALUMINUM: 1/8" THK. MIN. (ALLOY 6063-T6 MIN.)

(ANCHOR MUST EXTEND A MINIMUM OF (3) THREADS BEYOND METAL SUBSTRATE AND MAY BE HEX HEAD, PAN HEAD OR FLAT HEAD)

ANCHOR EDGE DISTANCE

INTO CONCRETE AND BLOCKS = 2-1/2" MIN.
INTO WOOD STRUCTURE = 1-1/4" MIN.
INTO METAL STRUCTURES = 1/2" MIN.

CONCRETE AT HEAD, SILL OR JAMBS (*f'c* = 3000 PSI MIN.)
ASTM C-90 CONCRETE BLOCK AT JAMBS (*f'm* = 2000 PSI MIN.)
WOOD AT HEAD OR JAMBS (*SG* = 0.55 MIN.)

Approved as complying with the Florida Building Code
Date 8/6/20
NOA# 20-0405.01
Miami Dade Product Control
By [signature]

MCY ENGINEERING, INC.
GLAZING CONSULTANTS
12781 MIRAMAR PKWY. STE 301
MIRAMAR, FL. 33027
P: 305.271.0117
P: 786.360.2786
www.MCYEngineering.com
mcy@mcyengineering.com

REVIEWED FOR STRUCTURAL COMPLIANCE ONLY BY
YIPING WANG LICENSE No 55983 STATE OF FLORIDA PROFESSIONAL ENGINEER
JUL 22 2020
YIPING WANG, P.E.
FL #55983 C.A.N. 28677

RC HOME SHOWCASE ALUMINUM WINDOWS AND DOORS
16115 NW 52ND AVENUE
MIAMI GARDENS, FL 33014
TEL: (305) 392-6214
FAX: (305) 260-6432

SERIES RB126 ALUMINUM SLIDING GLASS DOOR (LMI)
HORIZONTAL SECTIONS JAMB INSTALLATION OPTIONS

REV.	DATE	BY	DESCRIPTION
-	-	-	-

DATE: 11-15-19
SCALE: 1:2
DRAWN: RP
CHECKED: -

DRAWING No. RB126LMI

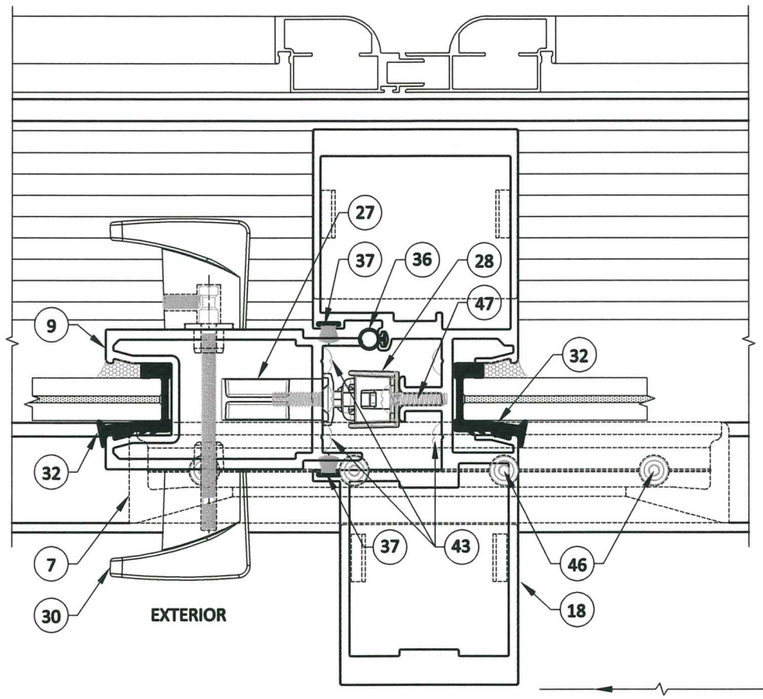

5/6A HEAVY DUTY MEETING STILE

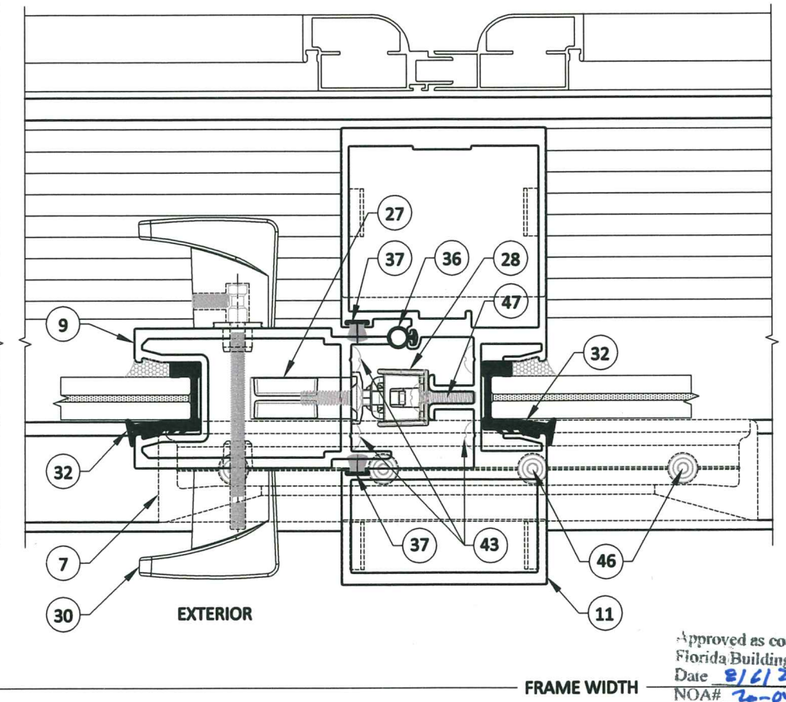

5A/6A STANDARD MEETING STILE
MEDIUM & LIGHT STILE OPTION

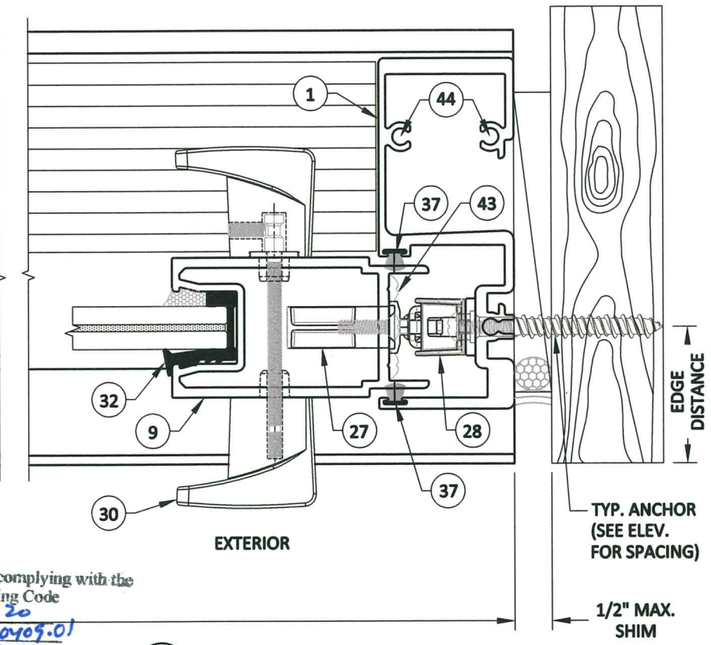

6/6A ANCHORED JAMB (LOCK SIDE)
APLICABLE TO OX & XO CONFIGURATION

Approved as complying with the Florida Building Code
Date 8/6/20
NOA# 20-0409.01
Miami Dade Product Control
By Ishwar L. Chandra

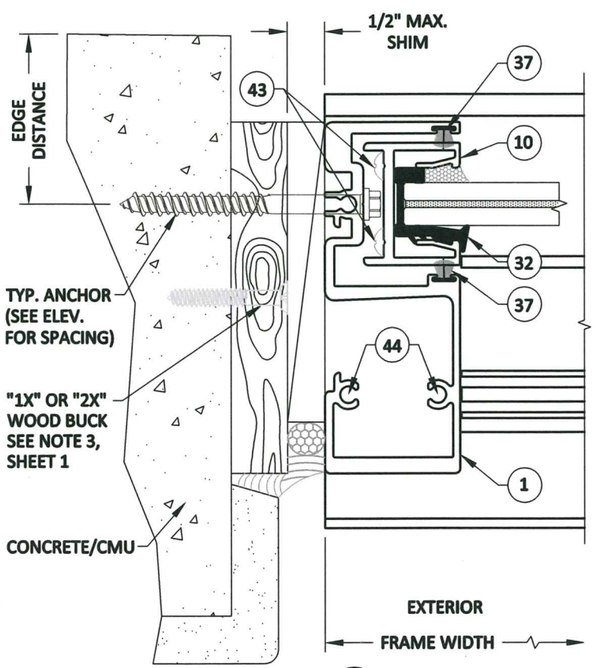

3/6A ANCHORED JAMB

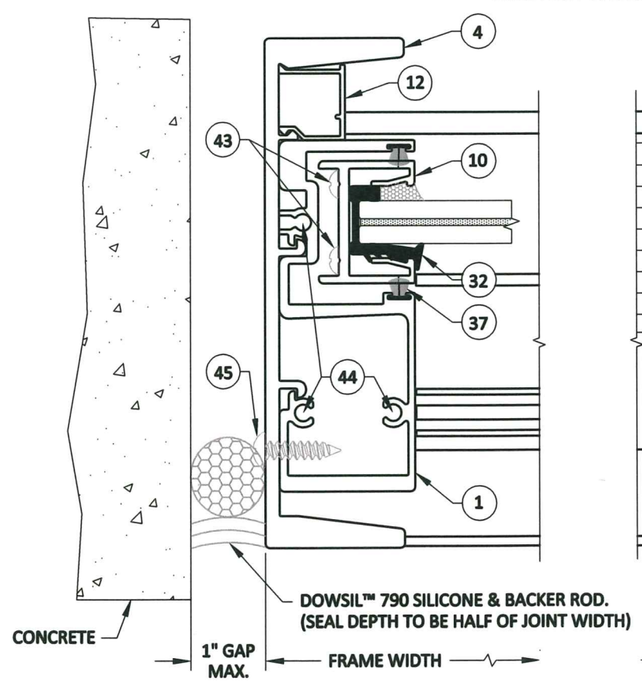

3A/6A FREE STANDING JAMB (FIXED SIDE)

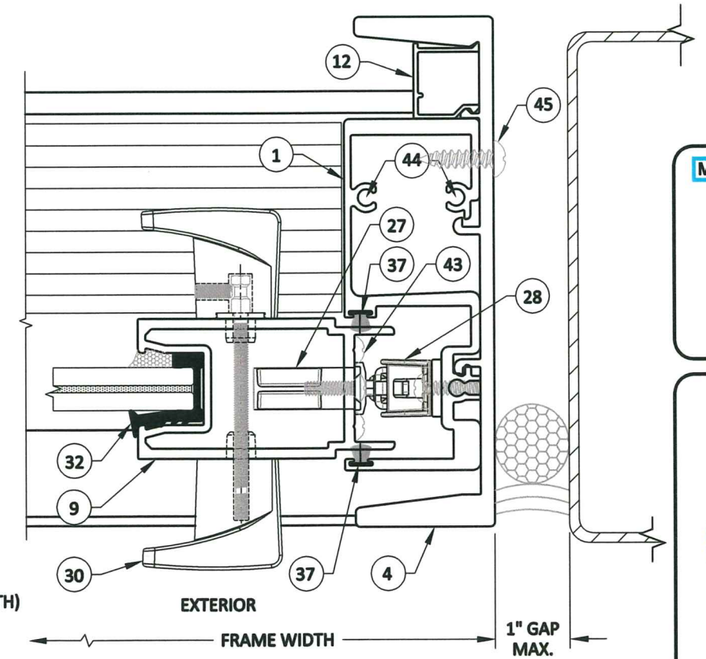

7/6A FREE STANDING JAMB (LOCK SIDE)

RC HOME SHOWCASE ALUMINUM WINDOWS AND DOORS
16115 NW 52ND AVENUE
MIAMI GARDENS, FL 33014
TEL: (305) 392-6214
FAX: (305) 260-6432

SERIES RB126 ALUMINUM SLIDING GLASS DOOR (LMI)

HORIZONTAL SECTIONS
JAMB INSTALLATION OPTIONS

MCY ENGINEERING, INC.
GLAZING CONSULTANTS
12781 MIRAMAR PKWY. STE 301
MIRAMAR, FL. 33027
P: 305.271.0117
P: 786.360.2786
www.MCYEngineering.com
mcy@mcyengineering.com

REVIEWED FOR STRUCTURAL COMPLIANCE ONLY BY

YIPING WANG LICENSE No 55983 STATE OF FLORIDA PROFESSIONAL ENGINEER
JUL 22 2020

YIPING WANG, P.E.
FL #55983 C.A.N. 28677

REV.	DATE	BY	DESCRIPTION
-	-	-	-

DATE: 11-15-19
SCALE: 1:2
DRAWN: RP
CHECKED: -

DRAWING No. RB126LMI

SHEET 6A OF 13

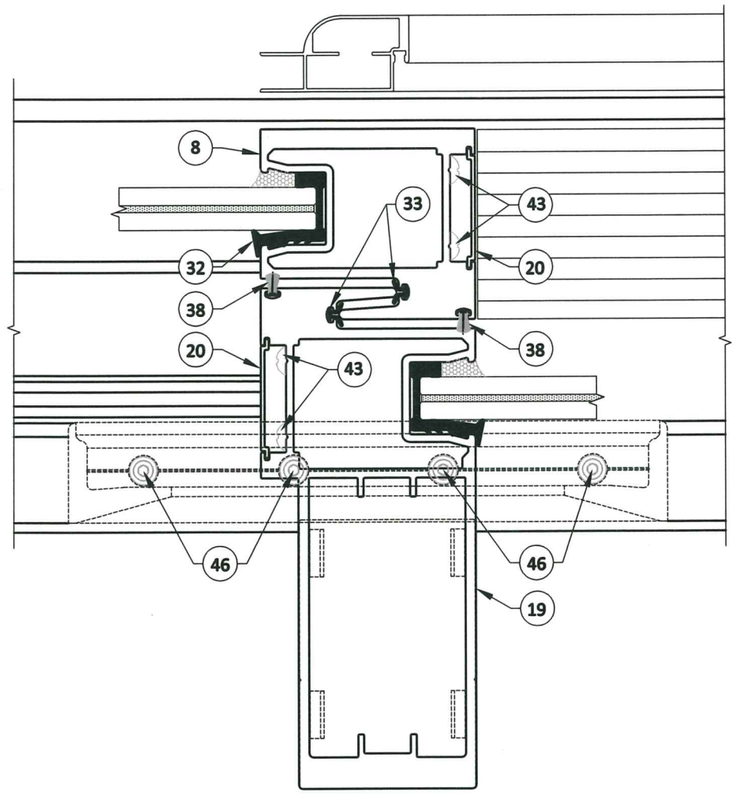

4/7 HEAVY DUTY - HD INTERLOCK

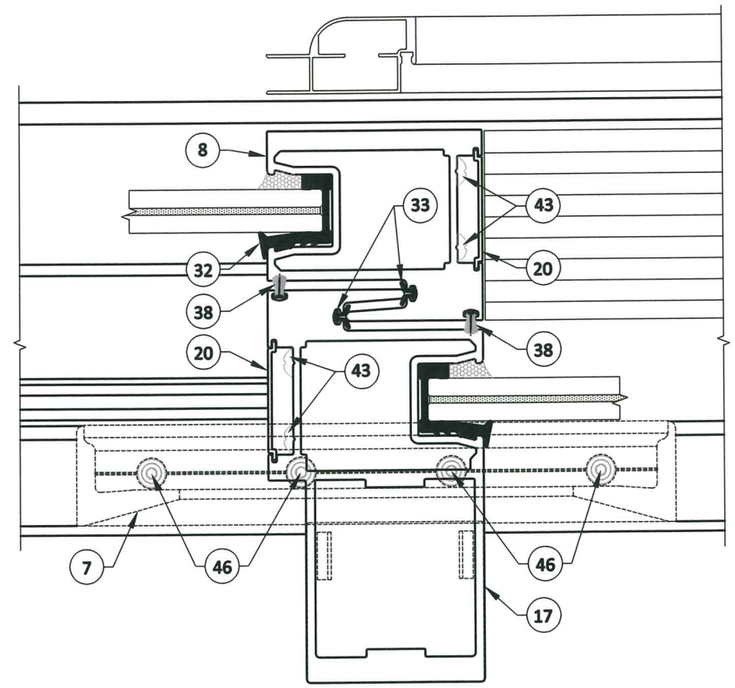

4A/7 MEDIUM STILE IN TERLOCK

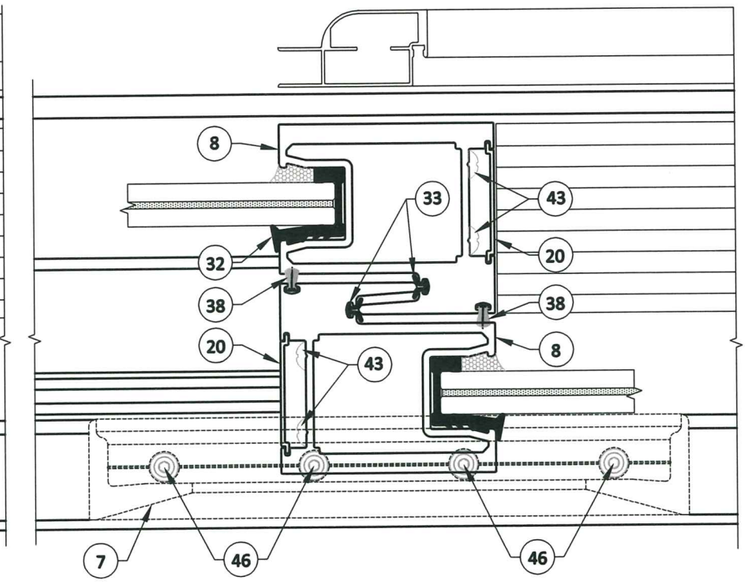

4B/7 LIGHT STILE INTERLOCK

EXTERIOR

FRAME WIDTH

Approved as complying with the Florida Building Code
Date 8/6/20
NOA# 20-0409.01
Miami Dade Product Control
By

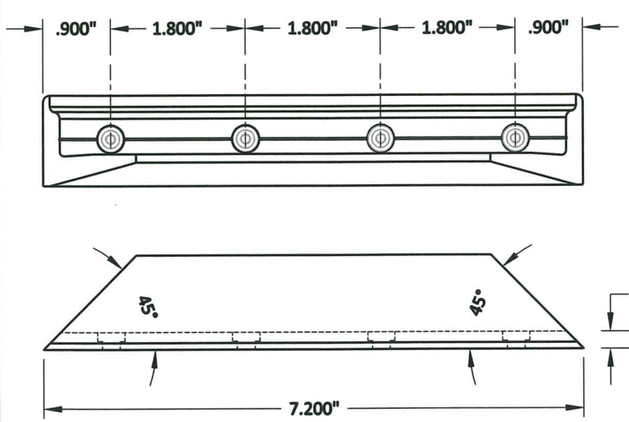

A/7 RETAINER CLIP DETAIL

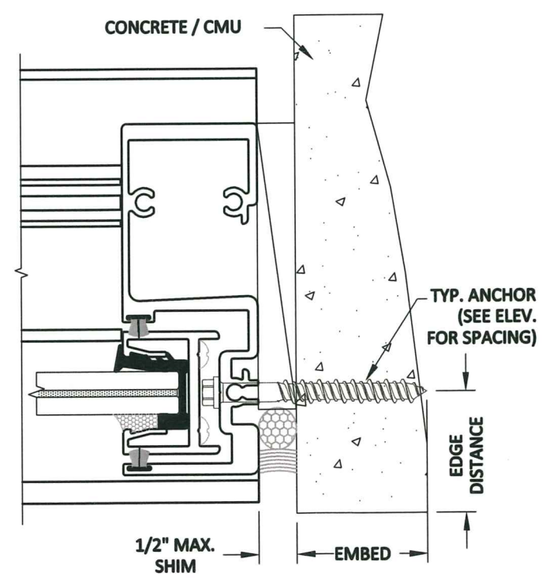

5/7 ANCHORED JAMB

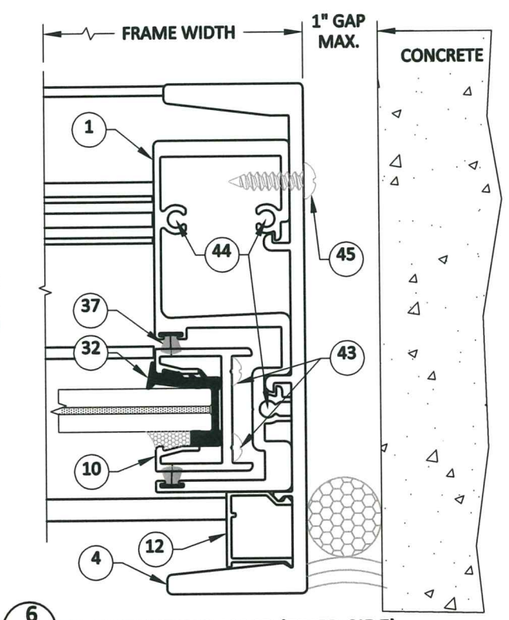

6/7 FREE STANDING JAMB (FIXED SIDE)

MCY ENGINEERING, INC.
GLAZING CONSULTANTS
12781 MIRAMAR PKWY. STE 301
MIRAMAR, FL. 33027
P: 305.271.0117
P: 786.360.2786
www.MCYEngineering.com
mcy@mcyengineering.com

REVIEWED FOR STRUCTURAL COMPLIANCE ONLY BY

YIPING WANG LICENSE No. 55983 STATE OF FLORIDA PROFESSIONAL ENGINEER
JUL 2 2 2020

YIPING WANG, P.E.
FL #55983 C.A.N. 28677

16115 NW 52ND AVENUE
MIAMI GARDENS, FL 33014
TEL: (305) 392-6214
FAX: (305) 260-6432

RC HOME SHOWCASE ALUMINUM WINDOWS AND DOORS

SERIES RB126 ALUMINUM SLIDING GLASS DOOR (LMI)

HORIZONTAL SECTIONS
JAMB INSTALLATION OPTIONS

DATE: 11-15-19	REV.	DATE	BY	DESCRIPTION
SCALE: 1:2	-	-	-	-
DRAWN: RP				
CHECKED: -				

DRAWING No.
RB126LMI

SHEET
7 OF 13

LIGHT STILE SGD APPROVED CONFIGURATIONS

(UNIT HEIGHT ≤ 10'-6")

MAX. DESIGN PRESSURE = ± 95.0 PSF

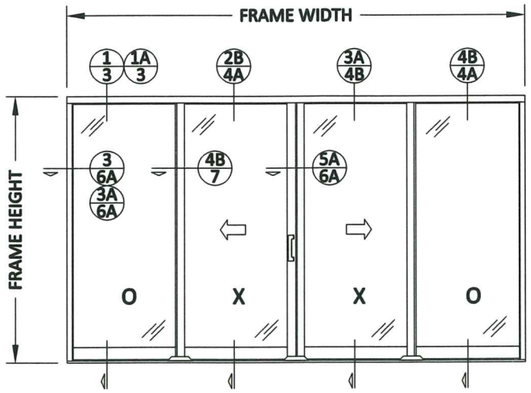

OXXO

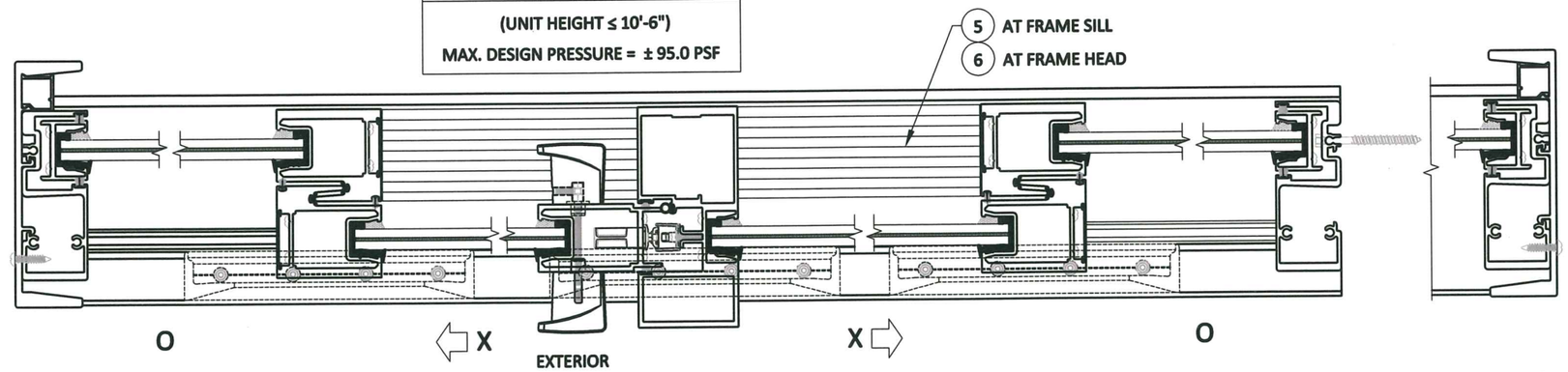

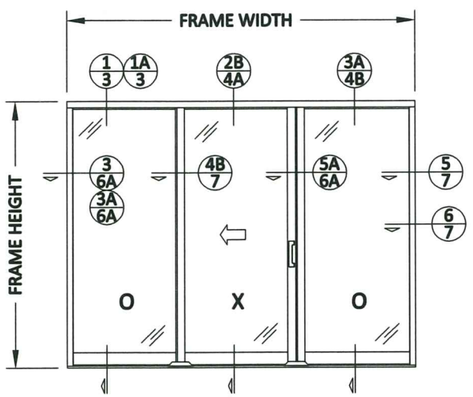

OXO

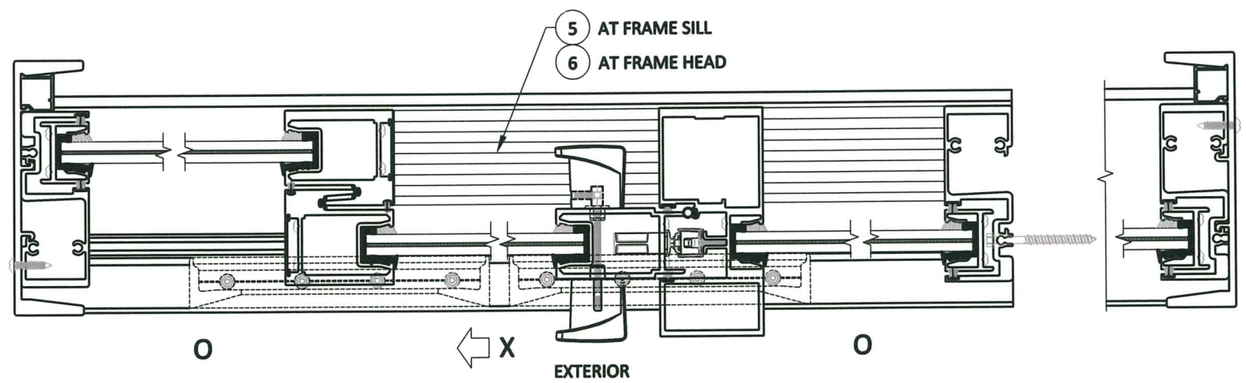

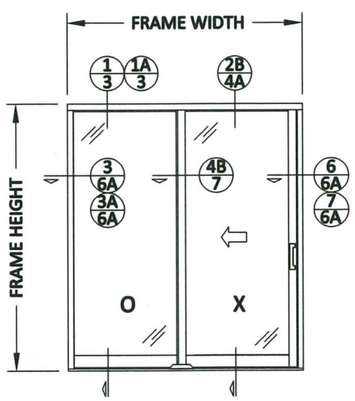

OX (SHOWN)
XO

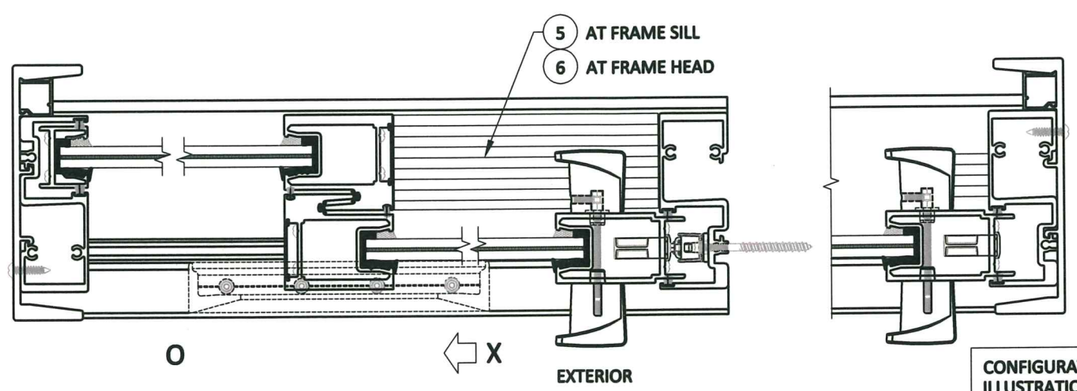

Approved as complying with the Florida Building Code
Date 8/16/20
NOA# 20-0409.01
Miami Dade Product Control
By Shang L. Chang

CONFIGURATIONS DEPICTED FOR ILLUSTRATION PURPOSES.
SEE SHEETS 3 THROUGH 6A FOR FRAME INSTALLATION OPTIONS.

MCY ENGINEERING, INC.
GLAZING CONSULTANTS
12781 MIRAMAR PKWY. STE 301
MIRAMAR, FL. 33027
P: 305.271.0117
P: 786.360.2786
www.MCYEngineering.com
mcy@mcyengineering.com

REVIEWED FOR STRUCTURAL COMPLIANCE ONLY BY

YIPING WANG LICENSE No 55983 STATE OF FLORIDA PROFESSIONAL ENGINEER

JUL 22 2020

YIPING WANG, P.E.
FL #55983 C.A.N. 28677

RC HOME SHOWCASE ALUMINUM WINDOWS AND DOORS
16115 NW 52ND AVENUE
MIAMI GARDENS, FL 33014
TEL: (305) 392-6214
FAX: (305) 260-6432

SERIES RB126 ALUMINUM SLIDING GLASS DOOR (LMI)

APPROVED CONFIGURATIONS

REV.	DATE	BY	DESCRIPTION
-	-	-	-

DATE: 11-15-19
SCALE: 1:4
DRAWN: RP
CHECKED: -

DRAWING No. RB126LMI

SHEET 8 OF 13

MEDIUM STILE SGD APPROVED CONFIGURATIONS

(UNIT HEIGHT ≤ 10'-6")

MAX. DESIGN PRESSURE = ± 135.0 PSF

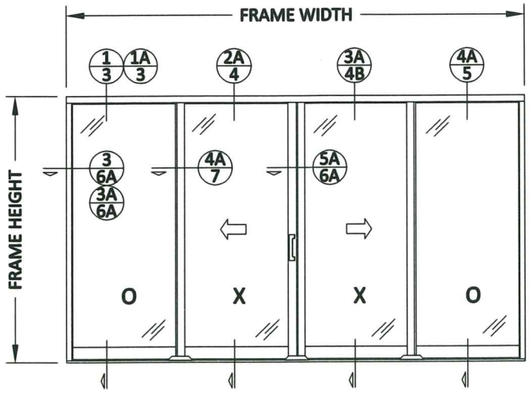

OXXO

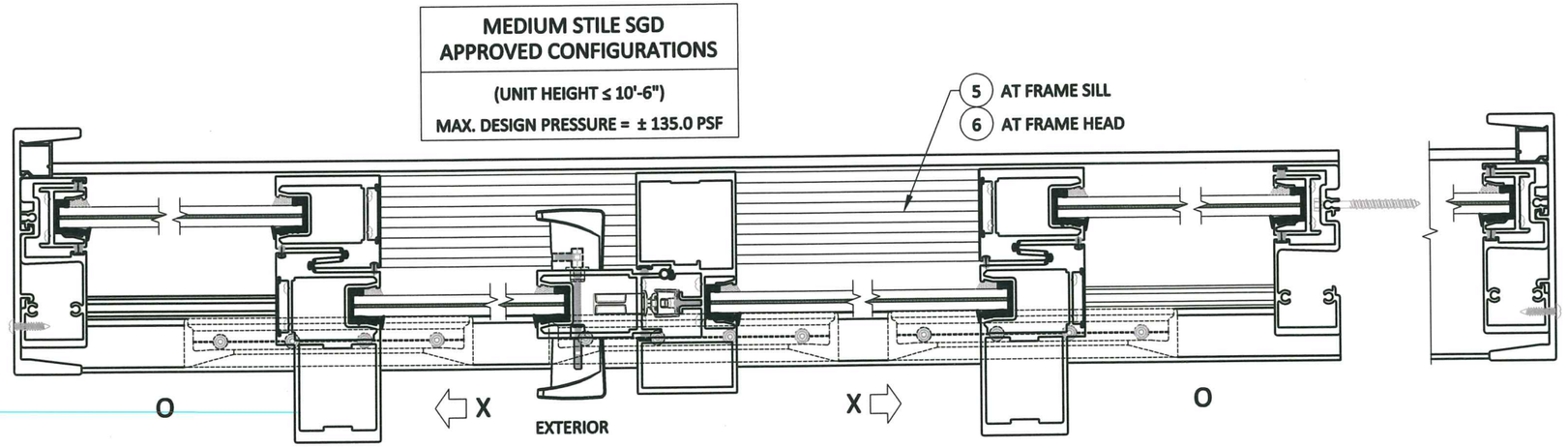

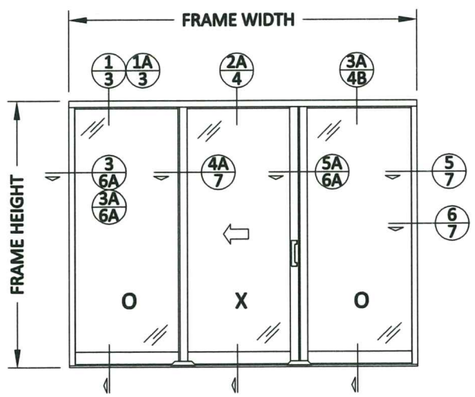

OXO

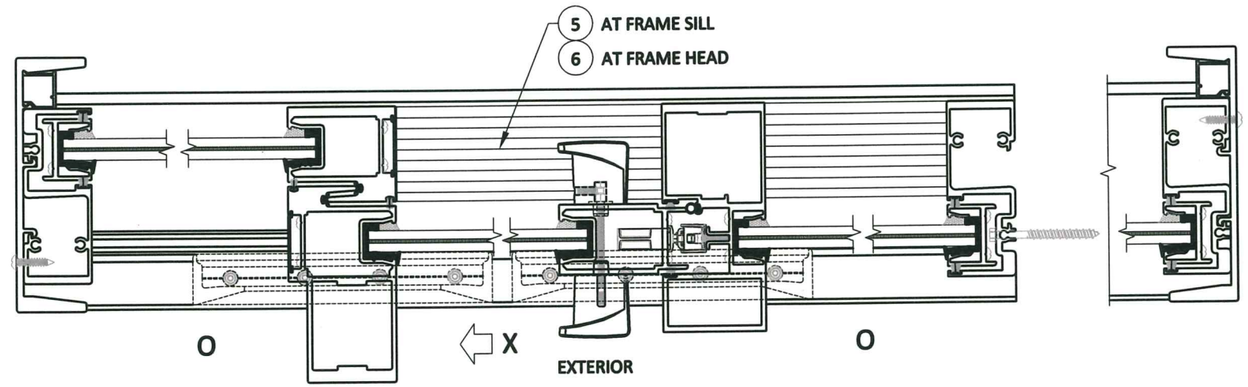

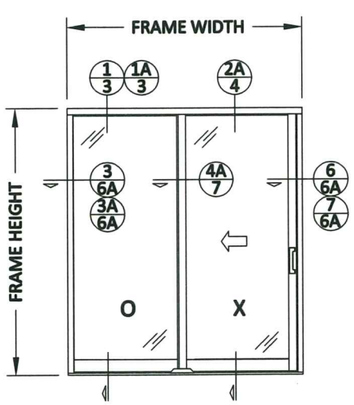

OX (SHOWN)
XO

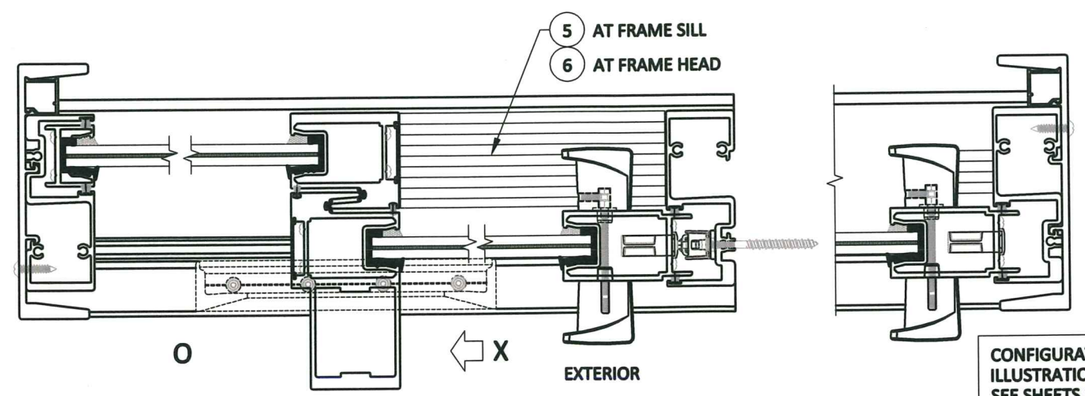

CONFIGURATIONS DEPICTED FOR ILLUSTRATION PURPOSES.
SEE SHEETS 3 THROUGH 6A FOR FRAME INSTALLATION OPTIONS.

Approved as complying with the Florida Building Code
Date 8/6/20
NOA# 20-0409.01
Miami Dade Product Control
By Ishwaryl. Chand

MCY ENGINEERING, INC.
GLAZING CONSULTANTS
12781 MIRAMAR PKWY. STE 301
MIRAMAR, FL. 33027
P: 305.271.0117
P: 786.360.2786
www.MCYEngineering.com
mcy@mcyengineering.com

REVIEWED FOR STRUCTURAL COMPLIANCE ONLY BY

YIPING WANG LICENSE JUL 2 2 2020 No 55983 STATE OF FLORIDA PROFESSIONAL ENGINEER

YIPING WANG, P.E.
FL #55983 C.A.N. 28677

RC HOME SHOWCASE ALUMINUM WINDOWS AND DOORS
16115 NW 52ND AVENUE
MIAMI GARDENS, FL 33014
TEL: (305) 392-6214
FAX: (305) 260-6432

SERIES RB126 ALUMINUM SLIDING GLASS DOOR (LMI)

APPROVED CONFIGURATIONS

REV.	DATE	BY	DESCRIPTION
-	-	-	-

DATE: 11-15-19
SCALE: 1:4
DRAWN: RP
CHECKED: -

DRAWING No. RB126LMI

SHEET 8A OF 13

HEAVY DUTY-HD STILE APPROVED CONFIGURATIONS

(10'-6" ≤ UNIT HEIGHT ≤ 12'-6")

MAX. DESIGN PRESSURE = ± 135.0 PSF

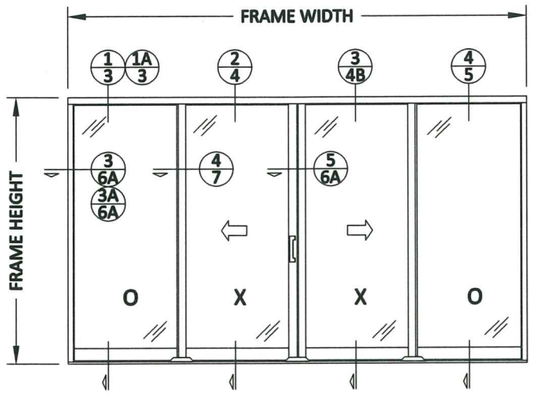

OXXO

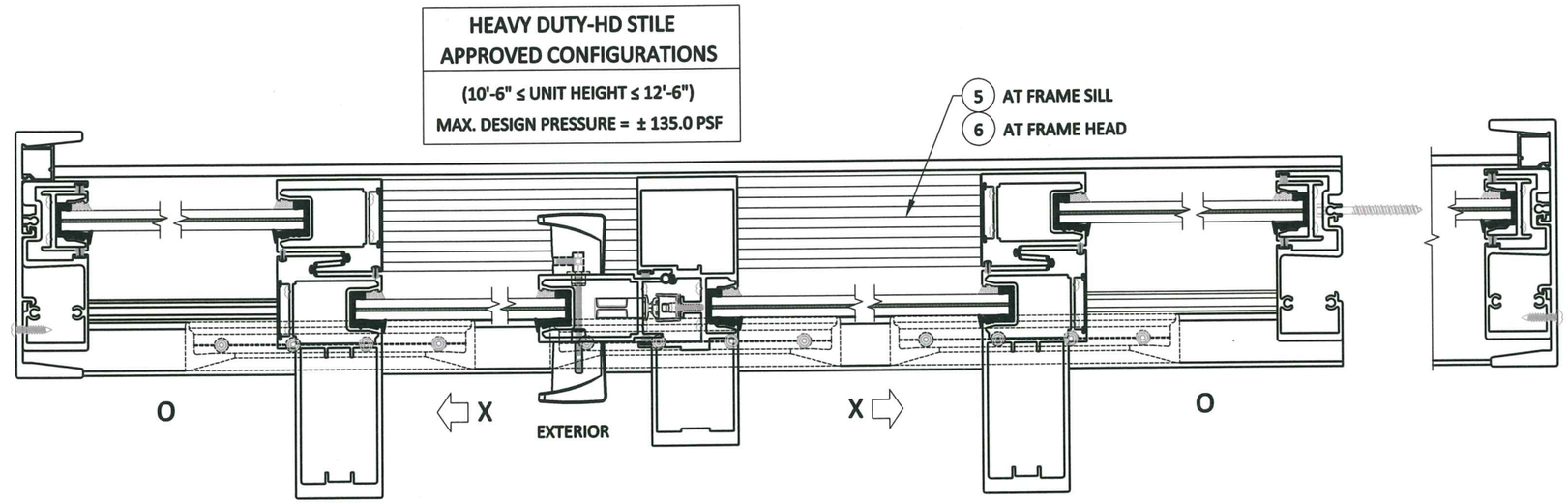

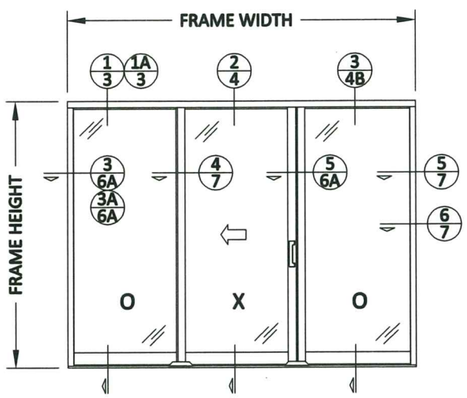

OXO

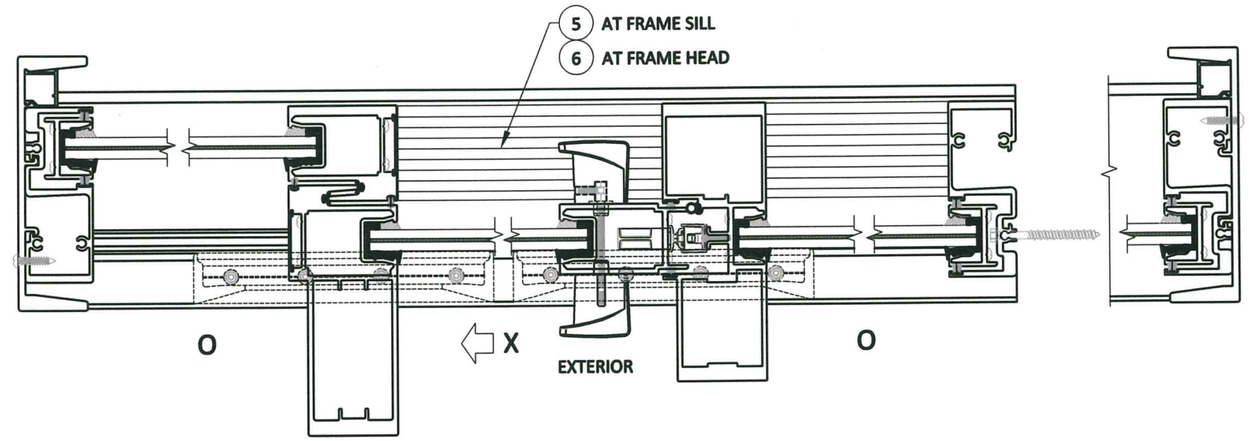

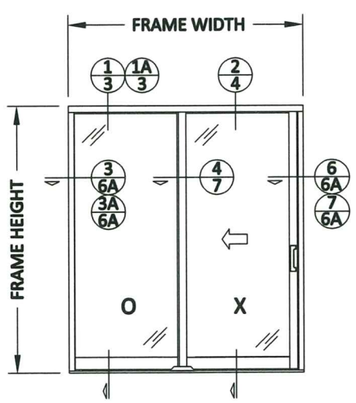

OX (SHOWN)
XO

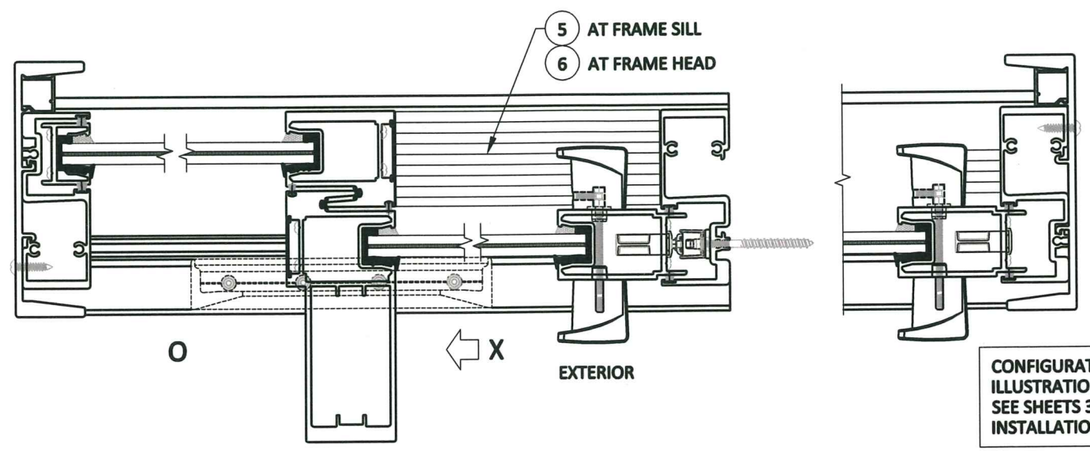

CONFIGURATIONS DEPICTED FOR ILLUSTRATION PURPOSES.
SEE SHEETS 3 THROUGH 6A FOR FRAME INSTALLATION OPTIONS.

Approved as complying with the Florida Building Code
Date 8/6/20
NOA# 20-0709.01
Miami Dade Product Control
By

MCY ENGINEERING, INC.
GLAZING CONSULTANTS
12781 MIRAMAR PKWY. STE 301
MIRAMAR, FL. 33027
P: 305.271.0117
P: 786.360.2786
www.MCYEngineering.com
mcy@mcyengineering.com

REVIEWED FOR STRUCTURAL COMPLIANCE ONLY BY

YIPING WANG LICENSE No 55983 STATE OF FLORIDA PROFESSIONAL ENGINEER

YIPING WANG, P.E.
FL #55983 C.A.N. 28677

16115 NW 52ND AVENUE
MIAMI GARDENS, FL 33014
TEL: (305) 392-6214
FAX: (305) 260-6432
RC HOME SHOWCASE ALUMINUM WINDOWS AND DOORS

SERIES RB126 ALUMINUM SLIDING GLASS DOOR (LMI)

APPROVED CONFIGURATIONS

REV.	DATE	BY	DESCRIPTION
-	-	-	-

DATE: 11-15-19
SCALE: 1:4
DRAWN: RP
CHECKED: -

DRAWING No. RB126LMI

SHEET 8B OF 13

GLASS DESIGN LOAD CAPACITY (PSF)							
NOMINAL PANEL WIDTH (INCHES)	DOOR FRAME HEIGHT (INCHES)	GLASS TYPE (GL-3) AND (GL-2) LIGHT STILE		GLASS TYPE (GL-2) MEDIUM STILE		GLASS TYPE (GL-2) HD STILE	
		EXTERIOR (+)	INTERIOR (-)	EXTERIOR (+)	INTERIOR (-)	EXTERIOR (+)	INTERIOR (-)
30	96	95	95	135	135	135	135
36		95	95	135	135	135	135
42		95	95	135	135	135	135
48		95	95	135	135	135	135
54		95	95	135	135	135	135
60		95	95	135	135	135	135
30	102	95	95	135	135	135	135
36		95	95	135	135	135	135
42		95	95	135	135	135	135
48		95	95	135	135	135	135
54		95	95	135	135	135	135
60		-	-	-	-	135	135
30	108	95	95	135	135	135	135
36		95	95	135	135	135	135
42		95	95	135	135	135	135
48		95	95	135	135	135	135
54		95	95	135	135	135	135
60		95	95	135	135	135	135
30	114	95	95	135	135	135	135
36		95	95	135	135	135	135
42		95	95	135	135	135	135
48		95	95	135	135	135	135
54		-	-	-	-	135	135
60		-	-	-	-	135	135
30	120	95	95	135	135	135	135
36		95	95	135	135	135	135
42		95	95	135	135	135	135
48		95	95	135	135	135	135
54		-	-	-	-	135	135
60		-	-	-	-	135	135
30	126	95	95	135	135	135	135
36		95	95	135	135	135	135
42		95	95	135	135	135	135
48		95	95	135	135	135	135
54		-	-	-	-	135	135
30	132	-	-	-	-	135	135
36		-	-	-	-	135	135
42		-	-	-	-	135	135
48		-	-	-	-	135	135
54		-	-	-	-	135	135
30	138	-	-	-	-	135	135
36		-	-	-	-	135	135
42		-	-	-	-	135	135
48		-	-	-	-	135	135
30	144	-	-	-	-	135	135
36		-	-	-	-	135	135
42		-	-	-	-	135	135
48		-	-	-	-	135	135
30	150-1/4	-	-	-	-	135	135
36		-	-	-	-	135	135
42		-	-	-	-	135	135
48		-	-	-	-	135	135

INTER LOCK/ASTRAGAL LEVEL

LIGHT STILE	MEDIUM STILE	HD STILE
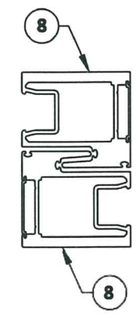 LIGHT DUTY INTERLOCK	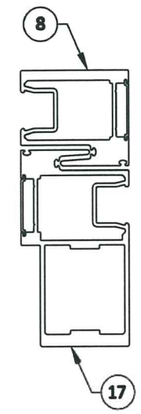 MEDIUM DUTY INTERLOCK	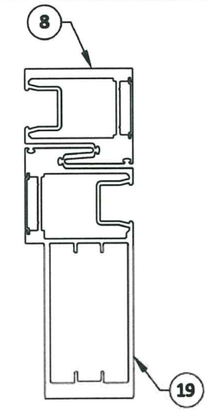 HEAVY DUTY INTERLOCK
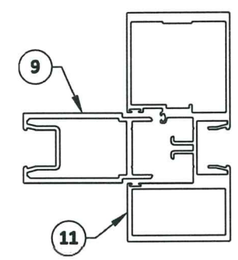 STANDARD ASTRAGAL	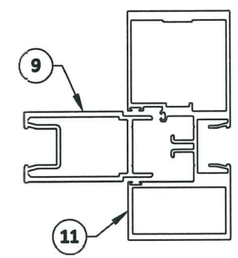 STANDARD ASTRAGAL	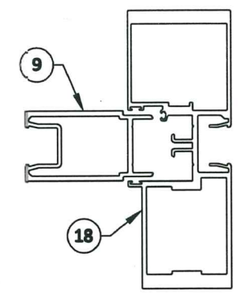 HEAVY DUTY ASTRAGAL

NOTE:
GLASS CAPACITIES ON THIS CHART COMPLIES WITH ASTM E1300-09
SEE ANCHOR LOAD CAPACITY ON SHEET 9A OF 13.

NOM. PANEL WIDTH= FRAME WIDTH / No OF PANEL

PANEL HEIGHT= FRAME HEIGHT- 1.683"

DLO WIDTH = NOM. PANEL WIDTH - 3.75"
DLO HEIGHT = FRAME HEIGHT - 7"

Approved as complying with the
Florida Building Code
Date 08/06/20
NOA# 20-0409.01
Miami Dade Product Control
By

MCY ENGINEERING, INC.
GLAZING CONSULTANTS
12781 MIRAMAR PKWY. STE 301
MIRAMAR, FL. 33027
P: 305.271.0117
P: 786.360.2786
www.MCYEngineering.com
mcy@mcyengineering.com

REVIEWED FOR STRUCTURAL COMPLIANCE ONLY BY

YIPING WANG LICENSE No 55983 STATE OF FLORIDA PROFESSIONAL ENGINEER
JUL 22 2020

YIPING WANG, P.E.
FL #55983 C.A.N. 28677

RC HOME SHOWCASE ALUMINUM WINDOWS AND DOORS
16115 NW 52ND AVENUE
MIAMI GARDENS, FL 33014
TEL: (305) 392-6214
FAX: (305) 260-6432

SERIES RB126 ALUMINUM SLIDING GLASS DOOR (LMI)

DESIGN LOAD CAPACITY CHART

REV.	DATE	BY	DESCRIPTION
-	-	-	-

DATE: 11-15-19
SCALE: -
DRAWN: RP
CHECKED: -

DRAWING No. RB126LMI

SHEET 9 OF 13

ANCHOR DESIGN LOAD CAPACITY (PSF) , EXTERIOR (+) AND INTERIOR (-)

NOMINAL PANEL WIDTH (INCHES)	DOOR FRAME HEIGHT (INCHES)	HEAD ANCHORS AT MEETING STILE/INTERLOCK							SILL ANCHORS AT MEETING STILE/INTERLOCK					
		(1/2" SHIM)					(1/4" SHIM)		(1/2" SHIM)			(3/4" SHIM)		
		TYPE "A" 8 ANCHORS	TYPE "B" (3 KSI) 8 ANCHORS	TYPE "A" 10 ANCHORS	TYPE "B" (3 KSI) 10 ANCHORS	TYPE "B" (3 KSI) 11 ANCHORS	TYPE "C" 8 ANCHORS	TYPE "C" 10 ANCHORS	TYPE "B" (3 KSI) 6 ANCHORS	TYPE "B" (3 KSI) 7 ANCHORS	TYPE "B" (3 KSI) 8 ANCHORS	TYPE "B" (3 KSI) 6 ANCHORS	TYPE "B" (3 KSI) 7 ANCHORS	TYPE "B" (3 KSI) 8 ANCHORS
30	96	135	135	135	135	135	135	135	135	135	135	135	135	135
36		135	135	135	135	135	135	135	135	135	135	135	135	135
42		133	135	135	135	135	135	135	135	135	135	135	135	135
48		116	132	135	135	135	135	135	135	135	135	125	135	135
54		104	118	129	135	135	135	135	120	135	135	111	130	135
60		93	106	116	132	135	135	135	108	126	135	100	117	134
30	102	135	135	135	135	135	135	135	135	135	135	135	135	135
36		135	135	135	135	135	135	135	135	135	135	135	135	135
42		125	135	135	135	135	135	135	135	135	135	135	135	135
48		110	125	135	135	135	135	135	127	135	135	118	135	135
54		97	111	122	135	135	135	135	113	132	135	105	122	135
60		88	100	110	125	135	135	135	102	119	135	94	110	126
30	108	135	135	135	135	135	135	135	135	135	135	135	135	135
36		135	135	135	135	135	135	135	135	135	135	135	135	135
42		118	135	135	135	135	135	135	135	135	135	127	135	135
48		104	118	129	135	135	135	135	120	135	135	111	130	135
54		92	105	115	131	135	135	135	107	124	135	99	115	132
60		83	94	104	118	130	135	135	96	112	128	89	104	119
30	114	135	135	135	135	135	135	135	135	135	135	135	135	135
36		131	135	135	135	135	135	135	135	135	135	135	135	135
42		112	128	135	135	135	135	135	130	135	135	121	135	135
48		98	112	123	135	135	135	135	114	133	135	105	123	135
54		87	99	109	124	135	135	135	101	118	135	94	109	125
60		78	89	98	112	123	133	135	91	106	121	84	98	113
30	120	135	135	135	135	135	135	135	135	135	135	135	135	135
36		124	135	135	135	135	135	135	135	135	135	134	135	135
42		107	121	133	135	135	135	135	123	135	135	115	134	135
48		93	106	116	132	135	135	135	108	126	135	100	117	134
54		83	94	104	118	130	135	135	96	112	128	89	104	119
60		75	85	93	106	117	126	135	86	101	115	80	94	107
30	126	135	135	135	135	135	135	135	135	135	135	135	135	135
36		118	135	135	135	135	135	135	135	135	135	127	135	135
42		101	115	127	135	135	135	135	118	135	135	109	127	135
48		89	101	111	126	135	135	135	103	120	135	95	111	127
54		79	90	99	112	123	134	135	91	107	122	85	99	113
30	132	135	135	135	135	135	135	135	135	135	135	-	-	-
36		113	128	135	135	135	135	135	131	135	135	-	-	-
42		97	110	121	135	135	135	135	112	131	135	-	-	-
48		85	96	106	120	132	135	135	98	115	131	-	-	-
54		75	86	94	107	118	128	135	87	102	116	-	-	-
30	138	130	135	135	135	135	135	135	135	135	135	-	-	-
36		108	123	135	135	135	135	135	125	135	135	-	-	-
42		93	105	116	132	135	135	135	107	125	135	-	-	-
48		81	92	101	115	127	135	135	94	110	125	-	-	-
30	144	124	135	135	135	135	135	135	135	135	135	-	-	-
36		104	118	129	135	135	135	135	120	135	135	-	-	-
42		89	101	111	126	135	135	135	103	120	135	-	-	-
48		78	88	97	110	121	132	135	90	105	120	-	-	-
30	150-1/4	119	135	135	135	135	135	135	135	135	135	-	-	-
36		99	113	124	135	135	135	135	115	134	135	-	-	-
42		85	97	107	121	133	135	135	99	115	132	-	-	-
48		75	85	93	106	117	126	135	86	101	115	-	-	-

NOTE:

SEE SHEET 7 FOR ANCHOR TYPE AND DETAILS.

ANCHOR CAPACITIES IN THIS SHEET TO BE USED IN CONJUNCTION WITH GLASS / MULLION REINFORCEMENT CHART, SHEET 9.

LOWER VALUES FROM GLASS / MULLION REINFORCEMENT OR ANCHOR LOAD CAPACITY WILL APPLY TO ENTIRE SYSTEM.

SILL ANCHORS AT FREE STANDING JAMB NOTE:

TYPE "B" (6) ANCHORS AT MEETING STILE/INTERLOCK, USE (3) ANCHORS AT FREE STANDING JAMB END

TYPE "B" (7) ANCHORS AT MEETING STILE/INTERLOCK, USE (4) ANCHORS AT FREE STANDING JAMB END

TYPE "B" (8) ANCHORS AT MEETING STILE/INTERLOCK, USE (4) ANCHORS AT FREE STANDING JAMB END

HEAD ANCHORS AT FREE STANDING JAMB NOTE:

TYPE "A" (8) ANCHORS AT MEETING STILE/INTERLOCK, USE (4) ANCHORS AT FREE STANDING JAMB END

TYPE "B" (8) ANCHORS AT MEETING STILE/INTERLOCK, USE (4) ANCHORS AT FREE STANDING JAMB END

TYPE "A" (10) ANCHORS AT MEETING STILE/INTERLOCK, USE (5) ANCHORS AT FREE STANDING JAMB END

TYPE "B" (10) ANCHORS AT MEETING STILE/INTERLOCK, USE (5) ANCHORS AT FREE STANDING JAMB END

TYPE "B" (11) ANCHORS AT MEETING STILE/INTERLOCK, USE (6) ANCHORS AT FREE STANDING JAMB END

TYPE "C" (8) ANCHORS AT MEETING STILE/INTERLOCK, USE (4) ANCHORS AT FREE STANDING JAMB END

TYPE "C" (10) ANCHORS AT MEETING STILE/INTERLOCK, USE (5) ANCHORS AT FREE STANDING JAMB END

Approved as complying with the Florida Building Code
Date 8/6/20
NOA# 20-0409.01
Miami Dade Product Control
By Ishaq I. Chund

MCY ENGINEERING, INC.
GLAZING CONSULTANTS
12781 MIRAMAR PKWY. STE 301
MIRAMAR, FL. 33027
P: 305.271.0117
P: 786.360.2786
www.MCYEngineering.com
mcy@mcyengineering.com

REVIEWED FOR STRUCTURAL COMPLIANCE ONLY BY

YIPING WANG LICENSE JUL 2 2 2020 No 55983 STATE OF FLORIDA PROFESSIONAL ENGINEER

YIPING WANG, P.E.
FL #55983 C.A.N. 28677

RC HOME SHOWCASE ALUMINUM WINDOWS AND DOORS
16115 NW 52ND AVENUE
MIAMI GARDENS, FL 33014
TEL: (305) 392-6214
FAX: (305) 260-6432

SERIES RB126 ALUMINUM SLIDING GLASS DOOR (LMI)

ANCHOR CAPACITY CHART

REV.	DATE	BY	DESCRIPTION
-	-	-	-

DATE: 11-15-19
SCALE: -
DRAWN: RP
CHECKED: -

DRAWING No. RB126LMI

SHEET 9A OF 13

BILL OF MATERIALS

ITEM	PART No.	MATERIAL	DESCRIPTION	MANUFACTURER
1	RB126-001	ALUM. ALLOY 6005-T5	FRAME JAMB	FISA
2	RB126-002	ALUM. ALLOY 6005-T5	FRAME SILL	FISA
3	RB126-003	ALUM. ALLOY 6005-T5	FRAME HEAD	FISA
4	RB126-004	ALUM. ALLOY 6005-T5	FREE STANDING JAMB	FISA
5	RB126-005	ALUM. ALLOY 6063-T6	SILL COVER	FISA
6	RB126-006	ALUM. ALLOY 6063-T6	HEAD COVER	FISA
7	RB126-007	ALUM. ALLOY 6005-T5	RETAINER CLIP (8" LONG, AT SILL TRACK C.L. OF INTERLOCK & MEETING STILE)	FISA
8	RB126-008	ALUM. ALLOY 6005-T5	INNER INTERLOCK/NON-REINFORCED OUTER INTERLOCK (UNIT HEIGHT UP TO 10'-6")	FISA
9	RB126-009	ALUM. ALLOY 6005-T5	LOCK STILE	FISA
10	RB126-010	ALUM. ALLOY 6005-T5	VERTICAL FIXED STILE	FISA
11	RB126-011	ALUM. ALLOY 6005-T5	LIGHT DUTY MEETING STILE (UNIT HEIGHT UP TO 10'-6")	FISA
12	RB126-012	ALUM. ALLOY 6063-T6	FREE STANDING JAMB SNAP-IN FILLER	FISA
13	RB126-013	ALUM. ALLOY 6063-T6	OPERABLE PANEL TOP RAIL	FISA
14	RB126-014	ALUM. ALLOY 6063-T6	OPERABLE PANEL BOTTOM RAIL	FISA
15	RB126-015	ALUM. ALLOY 6063-T6	FIXED PANEL TOP RAIL	FISA
16	RB126-016	ALUM. ALLOY 6063-T6	FIXED PANEL BOTTOM RAIL	FISA
17	RB126-017	ALUM. ALLOY 6005-T5	LIGHT REINFORCED OUTER INTERLOCK (UNIT HEIGHT UP TO 10'-6")	FISA
18	RB126-018	ALUM. ALLOY 6005-T5	HEAVY DUTY MEETING STILE (10'-6" ≤ UNIT HEIGHT ≤ 12'-6")	FISA
19	RB126-019	ALUM. ALLOY 6005-T5	HEAVY REINFORCED OUTER INTERLOCK (10'-6" ≤ UNIT HEIGHT ≤ 12'-6")	FISA
20	RB126-020	ALUM. ALLOY 6063-T6	INTERLOCK VERTICAL COVER / HEAD FILLER (NO SCREEN OPTION)	FISA
21	RB126-021	ALUM. ALLOY 6063-T6	HEAD SCREEN TRACK ADAPTOR	FISA
22	RB126-022	ALUM. ALLOY 6063-T6	SILL FILLER (NO SCREEN OPTION)	FISA
23	RB123-023	ALUM. ALLOY 6063-T6	SILL SCREEN TRACK ADAPTOR	FISA
24	PR05-6200	STAINLESS STEEL	SIDE-ADJUST ROLLER, 2/OPER. PANEL, SECURED W/(2) #8 x 3/4" PHP. PH. SMS.	INTERLOCK USA
25	PR05-2014-CSD	PVC	SIDE-ADJUST ROLLER SPACER (5mm)	INTERLOCK USA
26	GTT-15112018-HK-AX	S. STEEL / ZAMAK	ROLLER (OPTIONAL), 2/OPER. PANEL, SECURED W/(2) M5 x 0.8 x 16mm PHP. FH.	MANUFACTURAS PABOSE
27	PS01-1025/1021/1020	S. STEEL / CAST	LOCK ASSEMBLY, SECURED W/(10,8 OR 2) #10-24 x 3/4" PHP. OH. MS.	INTERLOCK USA
28	PS01-0060-CSD	S. STEEL / CAST	ADJUSTABLE KEEPER, 1/POINT LOCK, SECURED W/(4) #10 x 3/4" PHP. PH. SMS.	INTERLOCK USA
29	PS01-0205	CAST	LOCK SNIB & BLACK PLATE, SECURED W/(2) M4 x 0.7 x 50mm PHP. FH.	INTERLOCK USA
30	PS01-0218	CAST	HANDLE SET (8.20" LONG)	INTERLOCK USA
31	U-52 (Q250T270)	URETHANE / PE	.270" x .250" Q-LON® SEAL (OPTIONAL), AT HEAD/SILL COVERS (ON THE EXT.)	AMESBURY TRUTH™
32	GL-009	TPV	GLAZING GASKET (DUROM. 75±5%), AT PANEL GLAZING POCKET PERIMETER	MELPOINT PLASTICS
33	GL-010	TPV	GASKET (DUROM. 70±5%), AT INNER/OUTER INTERLOCK HOOK POCKETS	MELPOINT PLASTICS
34	V-019	TPV	DRIP GASKET (DUROM. 75±5%), AT OPERABLE BOTTOM RAIL (ON THE EXT.)	MELPOINT PLASTICS
35	V-026	TPV	GASKET (DUROM. 75±5%), AT FIX TOP RAIL (EXT.), HEAD COVER (INT.), AND SILL	MELPOINT PLASTICS
36	GL-015	TPV / PE	BULB GASKET (DUROM. 75±5%) AT MEETING STILE (ON THE INT.)	MELPOINT PLASTICS
37	W31245NK	POLYPROPYLENE	.270" x .240" ULTRA SOFT FIN® SEAL, AT OPER. PANEL TOP RAIL, MTG. STILE, JAMB	ULTRAFAB®, INC.
38	W31291NK	POLYPROPYLENE	.187" x .290" ULTRA SOFT FIN® SEAL, AT INNER/OUTER INTERLOCKS	ULTRAFAB®, INC.
39	CS-001	STAINLESS STEEL 304	ROLLER TRACK COVER (OPTIONAL)	-
40	P-074	TPV	UPPER DOOR STOP (DUROM. 60±5%), AT HEAD TRACK END	TREMCO
41	P-075	TPV	FIXED PANEL SUPPORT (4" LG.), 2 EA. AT FIXED PANEL BOTTOM RAIL (OXO ONLY)	MELTPOINT PLASTICS
42	2308-000	CAST/RUBBER	LOWER DOOR STOP W/COVER, AT SILL TRACK END	INTERLOCK USA
43	-	STAINLESS STEEL	#10 x 1-1/2" PHP. PH. SMS., PANEL ASSEMBLY SCREW (12/PANEL)	-
44	-	STAINLESS STEEL	#14 x 1-1/2" PHP. PH. SMS., FRAME ASSEMBLY SCREW (3/CORNER)	-
45	-	STAINLESS STEEL	#14 x 1" PHP. PH. SMS., FREE STANDING JAMB FASTENER (5/JAMB)	-
46	-	STAINLESS STEEL	Ø1/4"-20 x 1/2" LOW-PROFILE SOCKET HEAD, RETAINER CLIP FASTENER (4/EA.)	-
47	-	STAINLESS STEEL	#10 x 3/4" PHP. PH. SMS., KEEPER SCREW (4/EA.)	-
48	-	STAINLESS STEEL	#8 x 3/4" PHP. PH. SMS., SIDE ADJUSTABLE ROLLER SCREW (2/EA.)	-
49	-	STAINLESS STEEL	#12-24 x 3/4" PHP. PH. MS. W/#12 WASHER, UPPER DOOR STOP SCREW (2 EA.)	-
50	-	STAINLESS STEEL	M5 x 0.8 x 16mm PHP. FH. MS., OPTIONAL ROLLER SCREW (2/EA.)	-

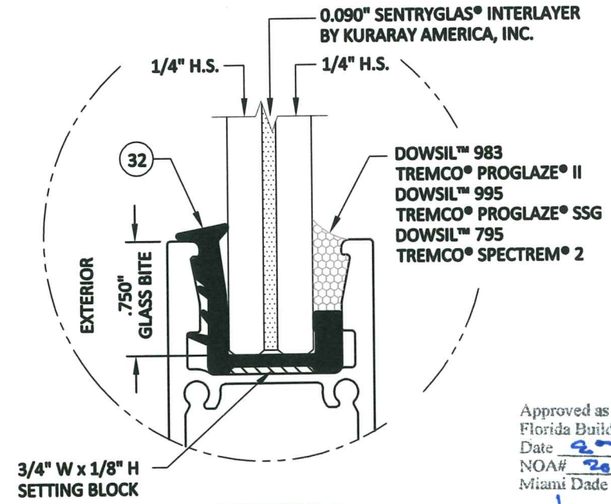

GLASS TYPE GL-2

Approved as complying with the
Florida Building Code
Date 2-6-20
NOA# 20-0409.01
Miami Dade Product Control
By

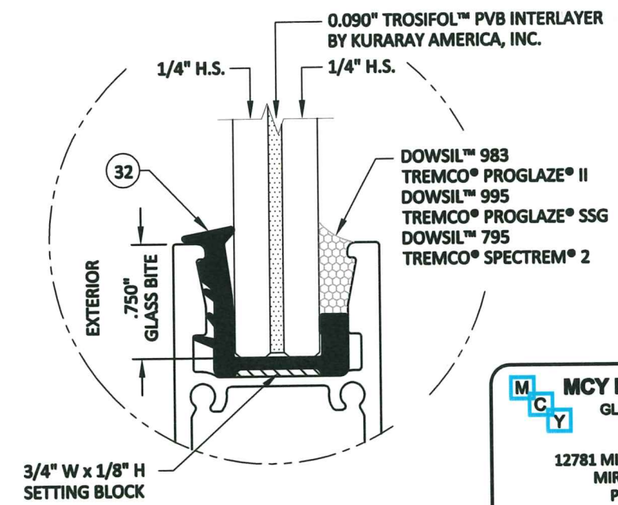

GLASS TYPE GL-3

GLAZING OPTIONS

SCALE 1:1

LOCK:

SURFACE MOUNT METALLIC THREE PLY HOOK TYPE LOCK ASSEMBLY AT 40 INCHES FROM BOTTOM WITH AN ADJUSTABLE KEEPER AT EACH LOCK POINT.

SEALANTS:

ALL FRAME AND PANEL MECHANICAL JOINTS AND INSTALLATION ANCHOR HEADS TO BE SEALED WITH COLORED SEALANT.

MCY ENGINEERING, INC.
GLAZING CONSULTANTS
12781 MIRAMAR PKWY. STE 301
MIRAMAR, FL. 33027
P: 305.271.0117
P: 786.360.2786
www.MCYEngineering.com
mcy@mcyengineering.com

REVIEWED FOR STRUCTURAL COMPLIANCE ONLY BY
YIPING WANG
LICENSE
JUL 2 2 2020
No 55983
STATE OF FLORIDA
PROFESSIONAL ENGINEER
YIPING WANG, P.E.
FL #55983 C.A.N. 28677

RC HOME SHOWCASE
ALUMINUM WINDOWS AND DOORS
16115 NW 52ND AVENUE
MIAMI GARDENS, FL 33014
TEL: (305) 392-6214
FAX: (305) 260-6432

SERIES RB126 ALUMINUM SLIDING GLASS DOOR (LMI)

BILL OF MATERIALS / GLAZING OPTIONS

REV.	DATE	BY	DESCRIPTION
-	-	-	-

DATE: 11-15-19
SCALE: AS NOTED
DRAWN: RP
CHECKED: -

DRAWING No. RB126LMI

SHEET 10 OF 13

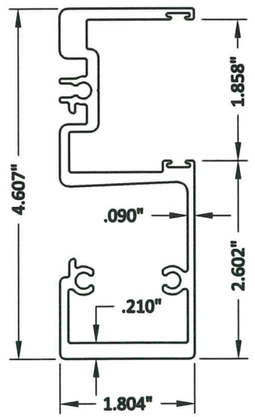

1 FRAME JAMB
(ALUM. ALLOY 6005-T5)

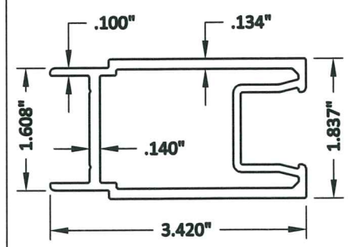

9 LOCK STILE
(ALUM. ALLOY 6005-T5)

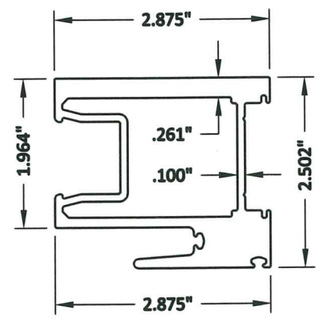

8 INNER INTERLOCK AND
NON-REINF. OUTER INTERLOCK
(ALUM. ALLOY 6005-T5)

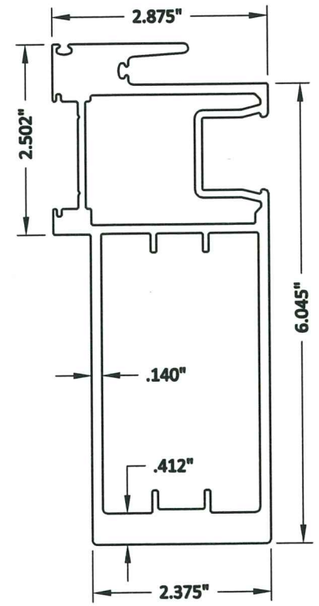

19 HEAVY REINF. OUTER INTERLOCK
(ALUM. ALLOY 6005-T5)

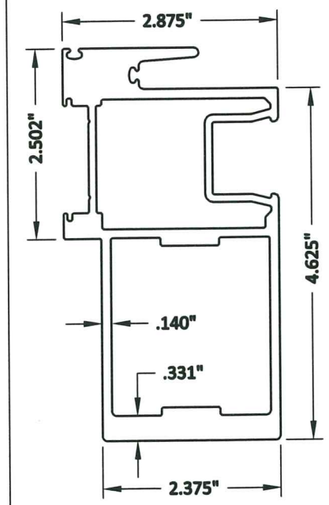

17 LIGHT REINF. OUTER INTERLOCK
(ALUM. ALLOY 6005-T5)

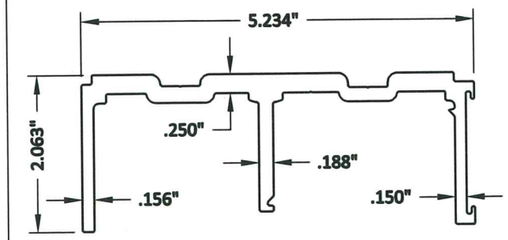

3 FRAME HEAD
(ALUM. ALLOY 6005-T5)

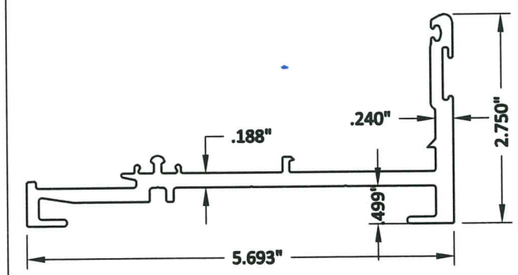

2 FRAME SILL
(ALUM. ALLOY 6005-T5)

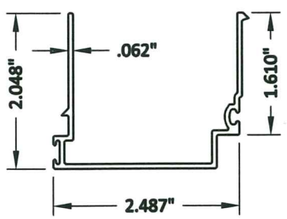

6 HEAD COVER
(ALUM. ALLOY 6063-T6)

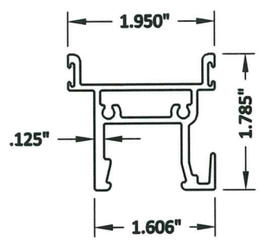

13 OPERABLE PANEL TOP RAIL
(ALUM. ALLOY 6063-T6)

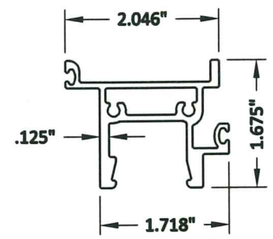

15 FIXED PANEL TOP RAIL
(ALUM. ALLOY 6063-T6)

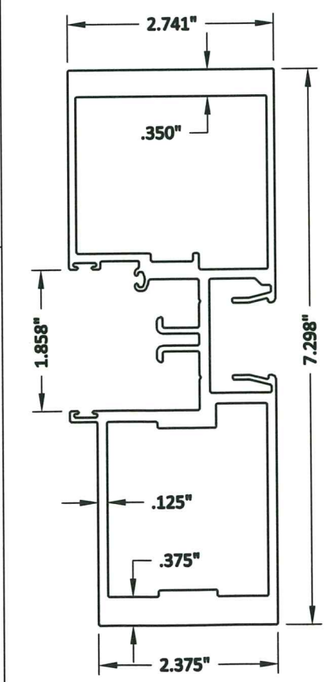

18 HEAVY DUTY MEETING STILE
(ALUM. ALLOY 6005-T5)

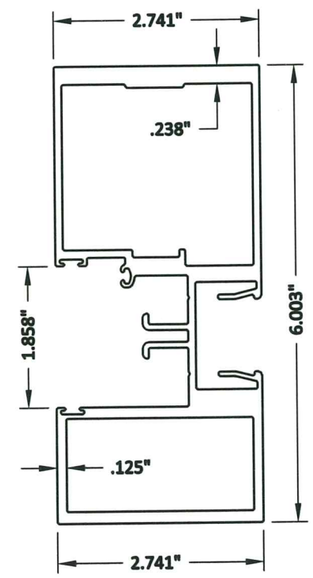

11 LIGHT DUTY MEETING STILE
(ALUM. ALLOY 6005-T5)

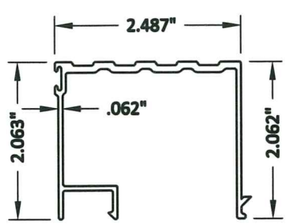

5 SILL COVER
(ALUM. ALLOY 6063-T6)

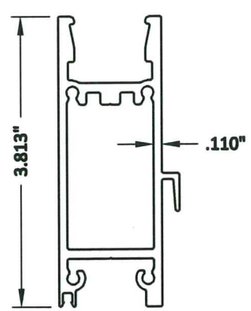

14 OPERABLE PANEL BOTTOM RAIL
(ALUM. ALLOY 6063-T6)

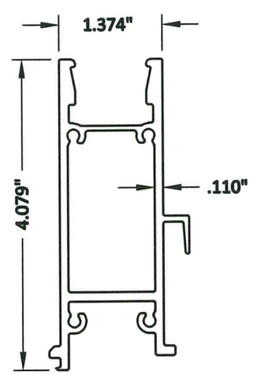

16 FIXED PANEL BOTTOM RAIL
(ALUM. ALLOY 6063-T6)

Approved as complying with the
Florida Building Code
Date 8-6-20
NOA# 20-0409.01
Miami Dade Product Control
By

MCY ENGINEERING, INC.
GLAZING CONSULTANTS
12781 MIRAMAR PKWY. STE 301
MIRAMAR, FL. 33027
P: 305.271.0117
P: 786.360.2786
www.MCYEngineering.com
mcy@mcyengineering.com

REVIEWED FOR STRUCTURAL
COMPLIANCE ONLY BY

YIPING WANG
LICENSE
JUL 2 2 2020
No 55983
STATE OF
FLORIDA
PROFESSIONAL ENGINEER

YIPING WANG, P.E.
FL #55983 C.A.N. 28677

RC HOME SHOWCASE
ALUMINUM WINDOWS AND DOORS
16115 NW 52ND AVENUE
MIAMI GARDENS, FL 33014
TEL: (305) 392-6214
FAX: (305) 260-6432

SERIES RB126 ALUMINUM
SLIDING GLASS DOOR (LMI)

DOOR COMPONENTS

REV.	DATE	BY	DESCRIPTION
-	-	-	-

DATE: 11-15-19
SCALE: 1:2
DRAWN: RP
CHECKED: -

DRAWING No.
RB126LMI

SHEET
11 OF 13

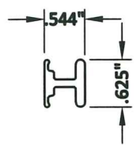

(23) SILL SCREEN TRACK ADAPTOR
(ALUM. ALLOY 6063-T6)

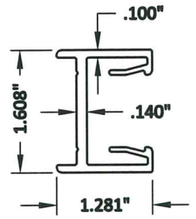

(10) VERTICAL FIXED STILE
(ALUM. ALLOY 6005-T5)

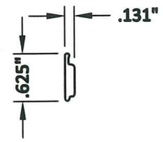

(22) SILL FILLER (NO SCREEN OPTION)
(ALUM. ALLOY 6063-T6)

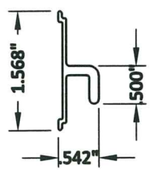

(21) HEAD SCREEN TRACK ADAPTOR
(ALUM. ALLOY 6063-T6)

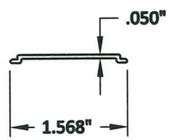

(20) INTERLOCK COVER
(ALUM. ALLOY 6063-T6)

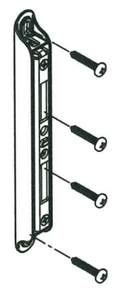

(28) ADJUSTABLE KEEPER
(PS01-0060-CSD)

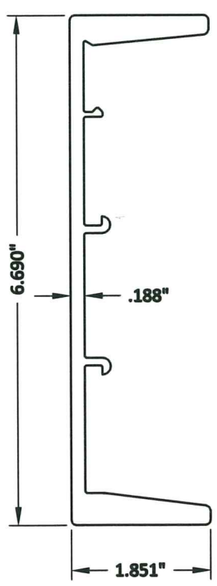

(4) FREE STANDING JAMB
(ALUM. ALLOY 6005-T5)

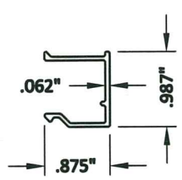

(12) FREE STANDING JAMB
SNAP-IN FILLER
(ALUM. ALLOY 6063-T6)

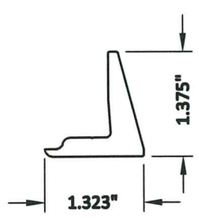

(7) RETAINER CLIP
(ALUM. ALLOY 6005-T5)

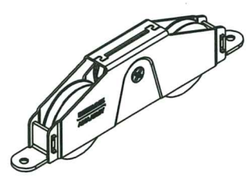

(24) SIDE-ADJUST ROLLER
(PR05-6200)

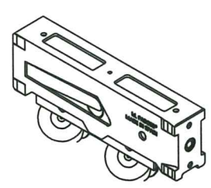

(26) ALTERNATE ROLLER
(GTT-15112018-HK-AX)

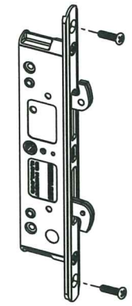

(PS01-1020)

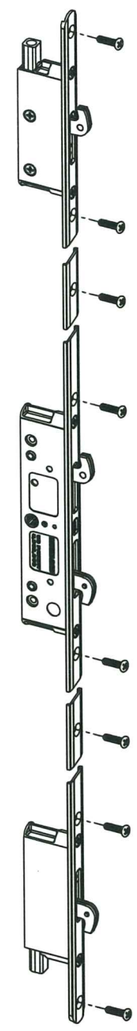

(PS01-1021)

(PS01-1025)

(27) LOCK ASSEMBLY

Approved as complying with the
Florida Building Code
Date 8-6-20
NOA# 20-0409.01
Miami Dade Product Control
By

MCY ENGINEERING, INC.
GLAZING CONSULTANTS

12781 MIRAMAR PKWY. STE 301
MIRAMAR, FL. 33027
P: 305.271.0117
P: 786.360.2786

www.MCYEngineering.com
mcy@mcyengineering.com

REVIEWED FOR STRUCTURAL
COMPLIANCE ONLY BY

YIPING WANG
LICENSE
JUL 22 2020
No 55983
STATE OF
FLORIDA
PROFESSIONAL ENGINEER

YIPING WANG, P.E.
FL #55983 C.A.N. 28677

RC HOME SHOWCASE
ALUMINUM WINDOWS AND DOORS
16115 NW 52ND AVENUE
MIAMI GARDENS, FL 33014
TEL: (305) 392-6214
FAX: (305) 260-6432

SERIES RB126 ALUMINUM
SLIDING GLASS DOOR (LMI)

DOOR COMPONENTS

REV.	DATE	BY	DESCRIPTION
-	-	-	-

DATE: 11-15-19
SCALE: 1:2
DRAWN: RP
CHECKED: -

DRAWING No.
RB126LMI

SHEET
12 OF 13

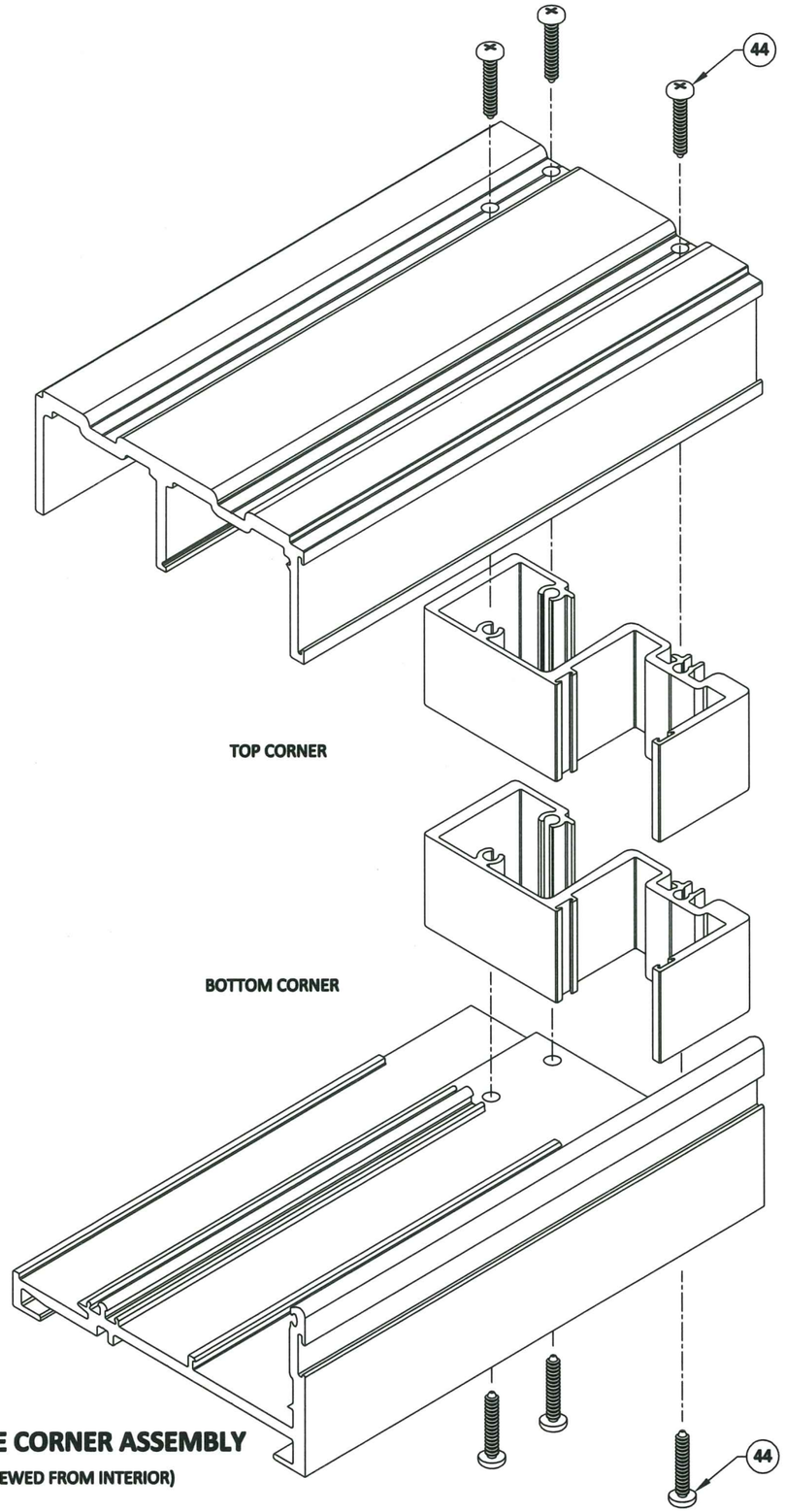

FRAME CORNER ASSEMBLY

(VIEWED FROM INTERIOR)

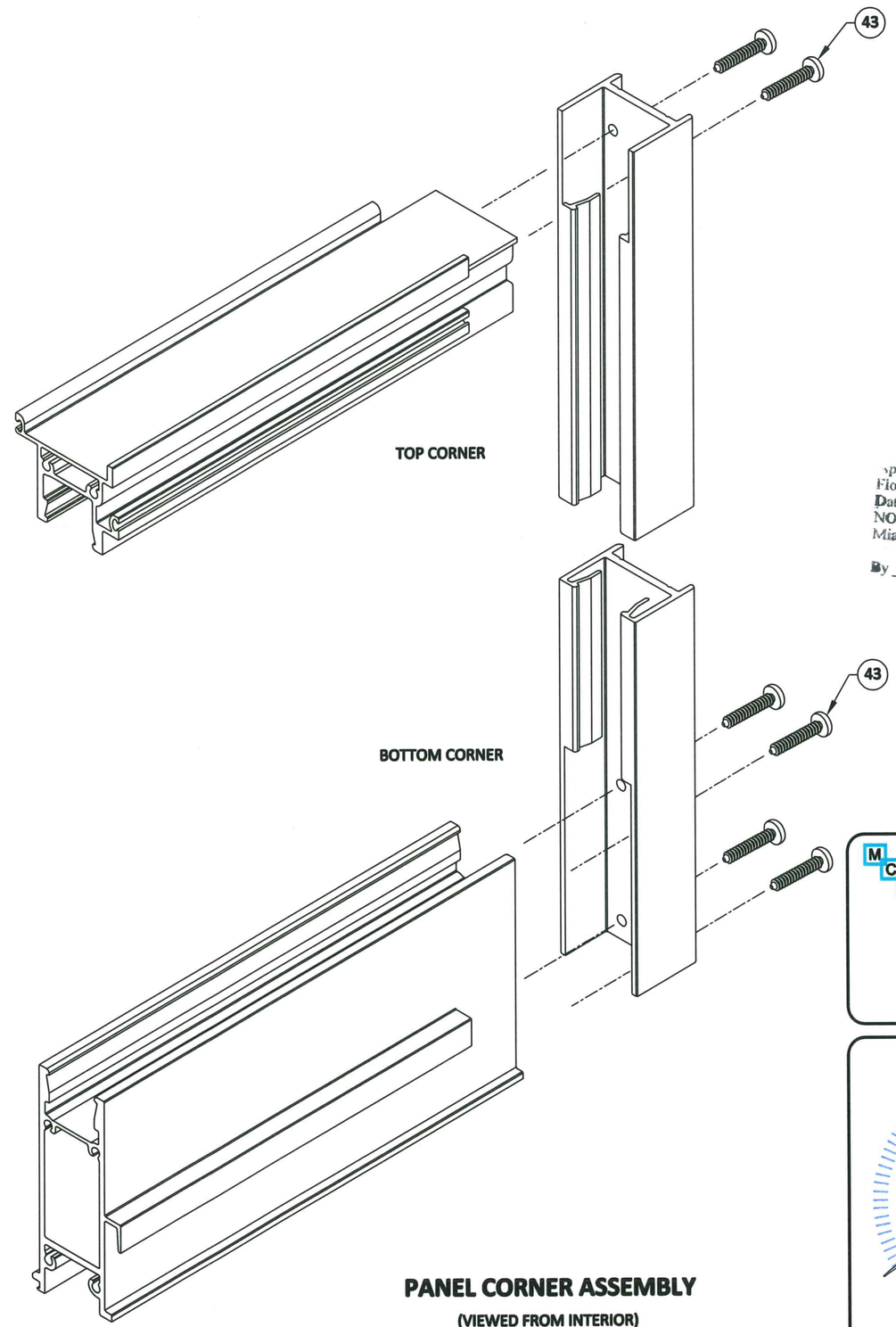

PANEL CORNER ASSEMBLY

(VIEWED FROM INTERIOR)

Approved as complying with the
Florida Building Code
Date 8-6-20
NOA# 20-0409.01
Miami Dade Product Control
By

MCY ENGINEERING, INC.
GLAZING CONSULTANTS

12781 MIRAMAR PKWY. STE 301
MIRAMAR, FL. 33027
P: 305.271.0117
P: 786.360.2786

www.MCYEngineering.com
mcy@mcyengineering.com

REVIEWED FOR STRUCTURAL
COMPLIANCE ONLY BY

YIPING WANG
LICENSE
JUL 2 2 2020
No 55983
STATE OF
FLORIDA
PROFESSIONAL ENGINEER

YIPING WANG, P.E.
FL #55983 C.A.N. 28677

16115 NW 52ND AVENUE
MIAMI GARDENS, FL 33014
TEL: (305) 392-6214
FAX: (305) 260-6432

RC HOME SHOWCASE
ALUMINUM WINDOWS AND DOORS

SERIES RB126 ALUMINUM SLIDING GLASS DOOR (LMI)

CORNER CONSTRUCTION DETAILS

REV.	DATE	BY	DESCRIPTION
-	-	-	-

DATE: 11-15-19
SCALE: 1:2
DRAWN: RP
CHECKED: -

DRAWING No.
RB126LMI

SHEET
13 OF 13