MIAMI-DADE COUNTY
PRODUCT CONTROL SECTION
11805 SW 26 Street, Room 208
Miami, Florida 33175-2474
T (786) 315-2590 F (786) 315-2599
www.miamidade.gov/economy

DEPARTMENT OF REGULATORY AND ECONOMIC RESOURCES (RER)
BOARD AND CODE ADMINISTRATION DIVISION

NOTICE OF ACCEPTANCE (NOA)

Overhead Door Corporation
2501 South State Hwy 121, Suite 200
Lewisville, TX 75067

SCOPE:

This NOA is being issued under the applicable rules and regulations governing the use of construction materials. The documentation submitted has been reviewed and accepted by Miami-Dade County RER-Product Control Section to be used in Miami Dade County and other areas where allowed by the Authority Having Jurisdiction (AHJ).
This NOA shall not be valid after the expiration date stated below. The Miami-Dade County Product Control Section (In Miami Dade County) and/or the AHJ (in areas other than Miami Dade County) reserve the right to have this product or material tested for quality assurance purposes. If this product or material fails to perform in the accepted manner, the manufacturer will incur the expense of such testing and the AHJ may immediately revoke, modify, or suspend the use of such product or material within their jurisdiction. RER reserves the right to revoke this acceptance, if it is determined by Miami-Dade County Product Control Section that this product or material fails to meet the requirements of the applicable building code.
This product is approved as described herein, and has been designed to comply with the Florida Building Code, including the High Velocity Hurricane Zone.

DESCRIPTION: Series 625/626 Steel Rolling Door up to 22'-0" Wide

APPROVAL DOCUMENT: Drawing No. **308134**, titled "Series 625 Rolling Service Door 22' Dade County", sheets 1 and 2 of 2, dated 09/05/2003 and 10/10/2003, with revision H dated 05/03/2013, prepared by Overhead Door Corporation, signed and sealed by Mark A. Sawicki, P.E. on 12/17/2015, bearing the Miami-Dade County Product Control revision stamp with the Notice of Acceptance number and expiration date by the Miami-Dade County Product Control Section.

MISSILE IMPACT RATING: Large and Small Missile Impact Resistant

LABELING: A permanent label with the manufacturer's name or logo, manufacturing address, model/series number, the positive and negative design pressure rating, indicate impact rated if applicable, installation instruction drawing reference number, approval number (NOA), the applicable test standards, and the statement reading 'Miami-Dade County Product Control Approved' is to be located on the door's side track, bottom angle, or inner surface of a panel.

RENEWAL of this NOA shall be considered after a renewal application has been filed and there has been no change in the applicable building code negatively affecting the performance of this product.

TERMINATION of this NOA will occur after the expiration date or if there has been a revision or change in the materials, use, and/or manufacture of the product or process. Misuse of this NOA as an endorsement of any product, for sales, advertising or any other purposes shall automatically terminate this NOA. Failure to comply with any section of this NOA shall be cause for termination and removal of NOA.

ADVERTISEMENT: The NOA number preceded by the words Miami-Dade County, Florida, and followed by the expiration date may be displayed in advertising literature. If any portion of the NOA is displayed, then it shall be done in its entirety.

INSPECTION: A copy of this entire NOA shall be provided to the user by the manufacturer or its distributors and shall be available for inspection at the job site at the request of the Building Official.
This NOA **revises NOA # 18-1217.08** and consists of this page 1 and evidence pages E-1, E-2 and E-3, as well as approval document mentioned above.
The submitted documentation was reviewed by **Sifang Zhao, P.E.**

MIAMI-DADE COUNTY APPROVED

S.Z.

01/28/2021

NOTICE OF ACCEPTANCE: EVIDENCE SUBMITTED

1. Evidence submitted under previous NOA's

A. DRAWINGS *"Submitted under NOA # 15-1228.04"*

1. Drawing No. **308134**, titled "Series 625 Rolling Service Door 22' Dade County", sheets 1 and 2 of 2, dated 09/05/2003 and 10/10/2003, with revision H dated 05/03/2013, prepared by Overhead Door Corporation, signed and sealed by Mark A. Sawicki, P.E. on 12/17/2015.

B. TESTS *"Submitted under NOA # 13-1121.05"*

1. Test reports on 1) Uniform Static Air Pressure Test, Loading per FBC TAS 202-94
2) Large Missile Impact Test per FBC, TAS 201-94
3) Cyclic Wind Pressure Loading per FBC, TAS 203-94
4) Forced Entry Resistance Test per FBC, TAS 202-94
5) Tensile Test per ASTM E 8,
along with marked-up drawings and installation diagram of a Series 625 Series rolling garage door, prepared by Architectural Testing, Inc, Test Report No. **C8191.01-109-18**, dated 08/30/2013, signed and sealed by Michael D. Stremmel, P.E.

2. Test report on Salt Fog Spray Test per ASTM B-117 of G90 and G40 galvanized steel with prime coat samples, prepared by Environmental Testing Laboratory, Inc, Test Report No. **12732,** dated 06/22/2013 and signed by Brady Richard.

3. Test report on Surface Burning Characteristics per ASTM E84 of 625 Series open-faced FIP slats, prepared by Intertek, Test report No. **101187309SAT-001A,** dated 06/14/2013 and signed by Servando Romo.

4. Test report on Ignition Properties per ASTM D1929 of thermacore polyurethane, prepared by Intertek, Test Report No. **101187309MID-002,** dated 05/28/2013, signed and sealed by Mark Crawford.

"Submitted under NOA # 05-1003.24"

5. Test report on Surface Burning characteristics per ASTM E84 of slats insulated with 2lb polyurethane foam, prepared by Intertek, Test report No. **3061869-001r1,** dated 07/13/2004 and signed by J. Tanner.

6. Test report on Ignition Properties per ASTM D1929 of Polyurethane Foam insulation, prepared by Omega Point Laboratories, Test Report No. **17042-120730,** dated 09/12/2004, signed and sealed by W. E. Fith, P.E.

7. Test report on Salt Spray Fog Test per ASTM B-117 of G30, G40 & G90 samples, prepared by Environmental Testing Laboratory, Test Report No. **ETL-9100550287,** dated 03/13/2006 and signed by B. Richard.

Sifang Zhao, P.E.
Product Control Examiner
NOA No. 20-1130.08
Expiration Date: October 14, 2024
Approval Date: January 28, 2021

NOTICE OF ACCEPTANCE: EVIDENCE SUBMITTED

B. TESTS (Continued)

"Submitted under NOA # 03-1015.04"

8. Test report on Uniform Static Air Pressure Test per FBC, TAS 202, Large Missile Impact Test per FBC, TAS 201, Cyclic Wind Pressure Test per FBC, TAS 203 and Tensile Test per ASTM E8 of a 22' x 10' steel roll-up service door, prepared by Architectural Testing, Inc., Test Report No. **ATI 01-43464.01**, dated 09/10/2003 signed and sealed by L. G. Krupke, P.E.

C. CALCULATIONS *"Submitted under NOA # 13-1121.05"*

1. Wall fastener calculations prepared by Overhead Door Corporation, dated 10/31/2013, signed and sealed by Mark A. Sawicki, P.E.

"Submitted under NOA # 05-1003.24"

2. Calculations for Dade County Product Approval of 22, 20 & 18 Gauge Rolling Garage Door, prepared by Overhead Door Corporation on sheet 2 of 3, signed and sealed by LeRoy G. Krupke, P.E. on 09/16/2005.

D. QUALITY ASSURANCE

1. Miami-Dade Department of Regulatory and Economic Resources (RER)

E. MATERIAL CERTIFICATIONS

1. None.

F. STATEMENTS *"Submitted under NOA # 18-0801.10"*

1. Statement letter of code conformance to the 6th edition (2017) FBC issued by Overhead Door Corporation, dated 07/23/2018, signed and sealed by Mark A. Sawicki, P.E.

"Submitted under NOA # 15-1228.04"

2. Statement letter of code conformance to the 5th edition (2014) FBC issued by Overhead Door Corporation, dated 12/15/2015, signed and sealed by Mark A. Sawicki, P.E.

"Submitted under NOA # 13-1121.05"

3. Statement letter of code conformance to FBC 2010 and no financial interest prepared by Overhead Door Corporation, dated 10/31/2013, signed and sealed by Mark A. Sawicki, P.E.

Sifang Zhao, P.E.
Product Control Examiner
NOA No. 20-1130.08
Expiration Date: October 14, 2024
Approval Date: January 28, 2021

NOTICE OF ACCEPTANCE: EVIDENCE SUBMITTED

2. New evidence submitted

A. DRAWINGS

1. None.

B. TESTS

1. None.

C. CALCULATIONS

1. None.

D. QUALITY ASSURANCE

1. Miami-Dade Department of Regulatory and Economic Resources (RER)

E. MATERIAL CERTIFICATIONS

1. None.

F. STATEMENTS

1. Statement letter of code conformance to the FBC 7th Edition (2020), and manufactures products remain unchanged from the existing NOA drawings, issued by Overhead Door Corporation, dated 11/10/2020, signed and sealed by David L. Monsour, P.E

Sifang Zhao, P.E.
Product Control Examiner
NOA No. 20-1130.08
Expiration Date: October 14, 2024
Approval Date: January 28, 2021

NOTES
1. (−W/L) = NEGATIVE WINDLOAD
   (+W/L) = POSITIVE WINDLOAD
2. WALL ANGLES MAY BE WELDED TO STEEL JAMB. SEE SHEET 2 FOR WELDING DETAILS.
3. RATED DESIGN LOAD ±65 PSF.
4. CURTAIN MATERIAL: ASTM A–653 CS TYPE B. GUIDE MATERIAL: ASTM A–36
5. ALTERNATE CURTAIN MATERIAL: AISI–304 SS. MINIMUM YIELD 40,000 PSI.
6. CURTAIN MATERIAL SHALL BE GALVANIZED ACCORDING TO ASTM A–525 TO G40 MINIMUM.
7. THE DOOR MUST BE INSTALLED WITH THE TENSION WHEEL FACING THE INSIDE OF THE BUILDING.
8. PINS MUST BE ENGAGED AND CHAIN MUST BE HOOKED WHEN HURRICANE WINDS ARE ANNOUNCED.
9. WIND LOCKS ARE REQUIRED ON EACH SLAT
9. WINDLOCK MATERIAL: LOW CARBON CAST STEEL, GRADE 70–46 (485–250) PER ASTM A27. MIN TENSILE 70–KSI MIN YIELD 36–KSI. MIN ELONG 22%
10. WINDLOCKS ATTACHED TO EACH SLAT (CONTINUOUS)
11. RIVET SPECIFICATION: 1/4" DIAMETER RIVET, MINIMUM 1006 LOW–CARBON STEEL.

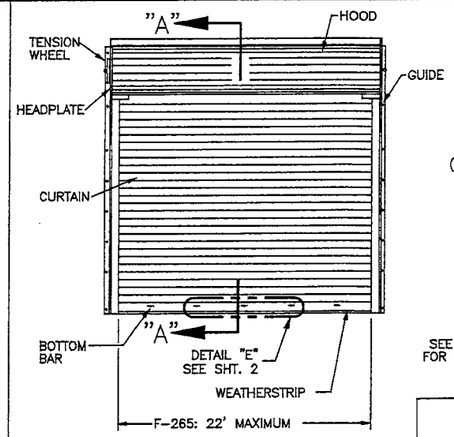

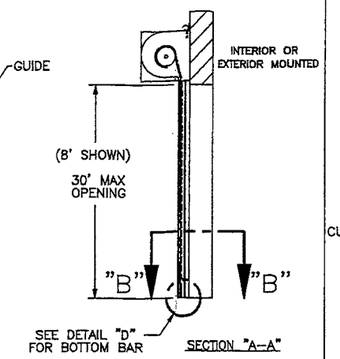

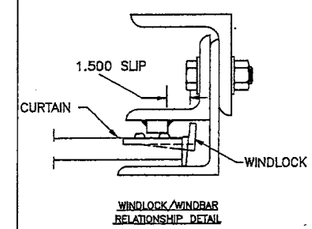

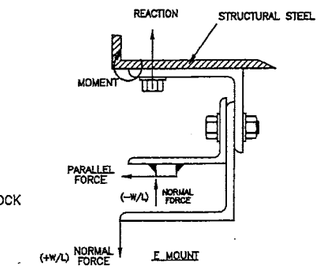

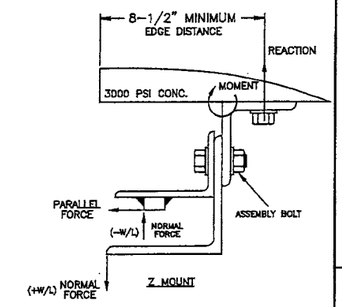

REVISIONS

ER	REV	DESCRIPTION	DATE	APPROVAL
	F	REV PER EN 20814	6/30/06	LK
500692	G	REV PER ER	3/7/11	SFT
502140	H	REV PER ER	5/3/13	MS

* LOADS – PER FOOT OF HEIGHT F–265 – DOOR SIZE REF. SUMMARY

LBS/FT DOOR HEIGHT	(E–MOUNT) LOADS *			(Z–MOUNT) LOADS *		
	22 GA **	20 GA	18 GA	22 GA **	20 GA	18 GA
REACTION	8345	8221	8008	2314	2285	2238
NORMAL	715	715	715	715	715	715
PARALLEL	2391	2365	2304	2391	2365	2304

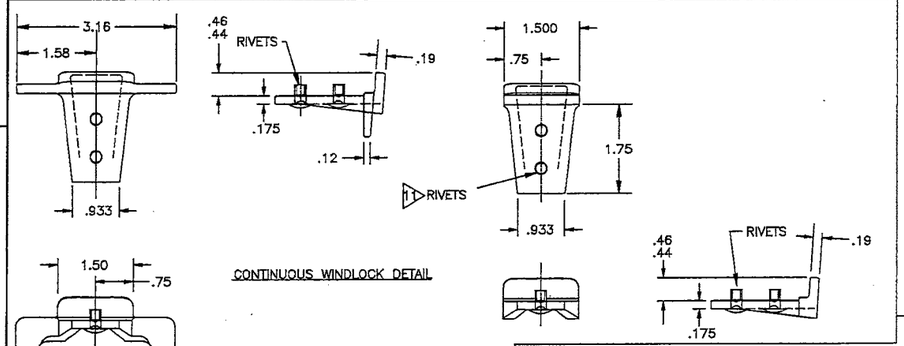

CONTINUOUS WINDLOCK DETAIL

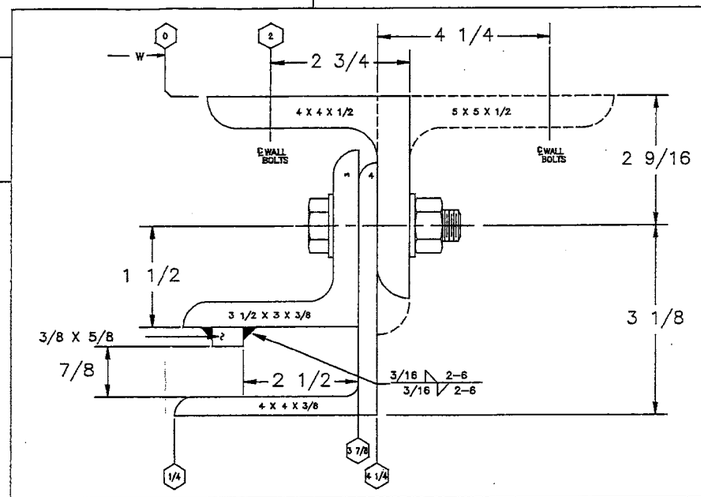

	ASSEMBLY BOLT	WALL BOLT STEEL JAMB	WALL ATTACHMENT CONCRETE JAMB
FIP	5/8" GRADE 5, 10" O.C.	5/8" GRADE 5, 12" O.C.	5/8" X 5 1/2" EMB HILTI KWIK BOLT 3 OR POWERS WEDGE BOLT 9" O.C.

*3000 PSI MINIMUM & 8–1/2" MINIMUM EDGE DISTANCE FOR ANCHORS.

2 NOTE: FOR DETAILS ON WELDING GUIDES TO STEEL JAMBS SEE SHEET 2.

PRODUCT REVISED
as complying with the Florida Building Code
NOA–No. 20-1130.08
Expiration Date 10/14/2024
By
Miami–Dade Product Control

PRODUCT REVISED
as complying with the Florida Building Code
Acceptance No 15-1228.04
Expiration Date 10/14/2019
By
Miami-Dade Product Control

PIN MUST BE ENGAGED FOR DOOR TO WITHSTAND DESIGN LOADS

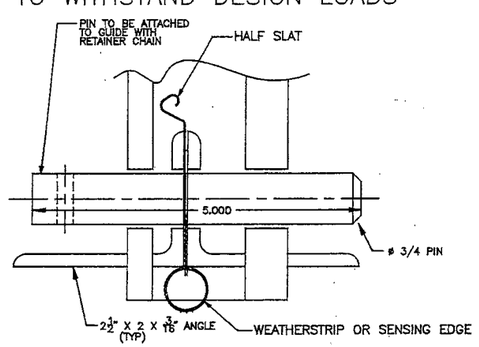

SECTION "C–C"

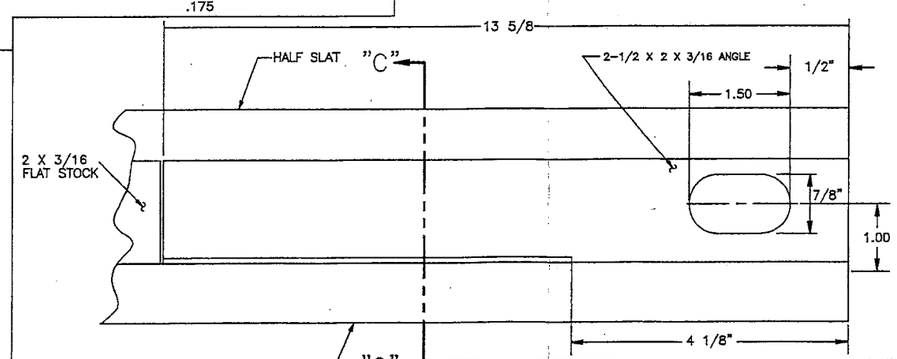

DETAIL "D"
BOTTOM BAR

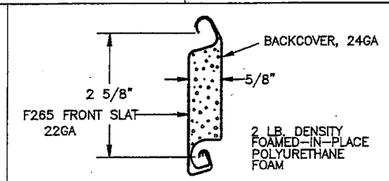

FIP SLAT
GAUGE OPTIONS: 22**, 20, 18
**TESTED IN ACCORDANCE WITH DADE COUNTY PROTOCOLS TAS 201–94, TAS 202–94, AND TAS 203–94

SERIES 626 IS EQUIVALENT CONSTRUCTION

MARK A. SAWICKI LICENSE No. 72613 STATE OF FLORIDA PROFESSIONAL ENGINEER
12/17/15

OVERHEAD DOOR CORPORATION
2501 SOUTH STATE HWY 121 BUSINESS
LEWISVILLE, TX 75067

MARK A. SAWICKI, P.E. #72613

THE DRAWINGS AND ALL OTHER INFORMATION CONTAINED HEREIN ARE THE CONFIDENTIAL AND PROPRIETARY PROPERTY OF OVERHEAD DOOR CORPORATION AND ITS AFFILIATED COMPANIES. THIS DRAWING AND INFORMATION, IN WHOLE OR IN PART, MAY NOT BE COPIED IN ANY MANNER OR DISCLOSED TO ANYONE WITHOUT THE PRIOR WRITTEN CONSENT OF OVERHEAD DOOR CORPORATION. NO DISCLOSURE OF ANY OF THIS DRAWING OR INFORMATION IS INTENDED TO OPERATE AS A LICENSE OR AUTHORIZATION TO USE IT FOR ANY PURPOSE WITHOUT THE SPECIFIC WRITTEN CONSENT OF OVERHEAD DOOR CORPORATION.

THIRD ANGLE PROJECTION
ASME Y14.100 AND Y14.5 APPLY, UNLESS OTHERWISE SPECIFIED DIMENSIONS ARE IN U.S. CUSTOMARY UNITS.

TOLERANCES UNLESS OTHERWISE SPECIFIED
HOLE DIAMETER: UNDER .251 +.004/−.003; .251 TO .500 +.006/−.003; OVER .500 +.006/−.003
FRACTIONS: ± 1/16
WHOLE NUMBERS: ± .25; .X ± .1; .XX ± .03; .XXX ± .010; ANGLES: ± .5°

FINISH: 5
UNIT OF MEASURE: N/A
The Genuine. The Original. LEWISVILLE, TEXAS
MATERIAL: 4

	NAME	DATE
DRAWN BY:	G. FINERAN	8/8/03
CHECKED BY:	JD FAW	9/5/03
APPROVED BY:	L KRUPKE	9/5/03

DRAWING TITLE: SERIES 625, ROLLING SERVICE DOOR 22 FT. DADE COUNTY
DRAWING NUMBER: D– 308134
SCALE: NONE SHEET 1 OF 2

REF DWG | USED ON

▷ NOTES

1. REFER TO DRAWING 308670.0001 FOR TAG DETAILS
2. FASTENER FOR TAG IS P/N 080276-1004(STEEL DRIVE SCREW). TAG WILL BE MOUNTED IN THE MIDDLE OF THE BOTTOM BAR.

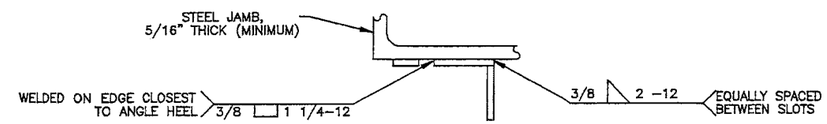

TOP VIEW

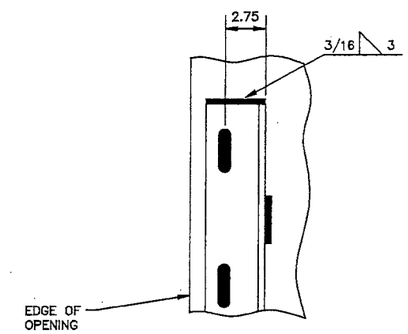

FRONT VIEW OF WALL ANGLE

DETAILS FOR WELDING "E" GUIDES TO STEEL JAMBS

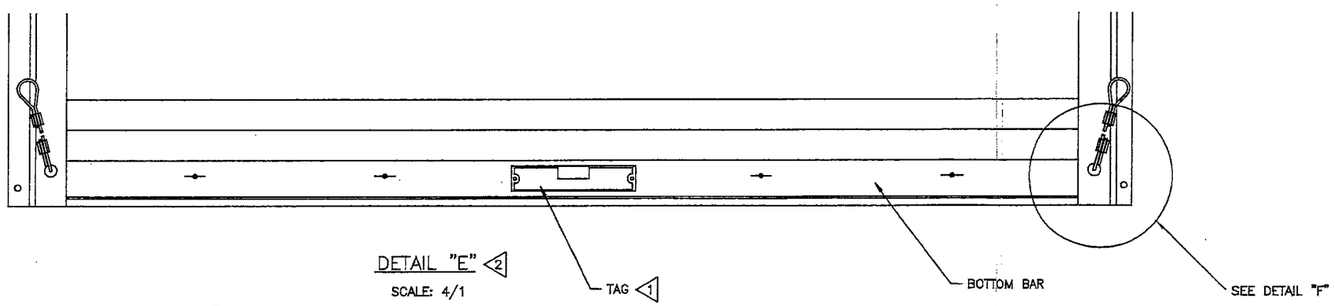

DETAIL "E" 2

SCALE: 4/1

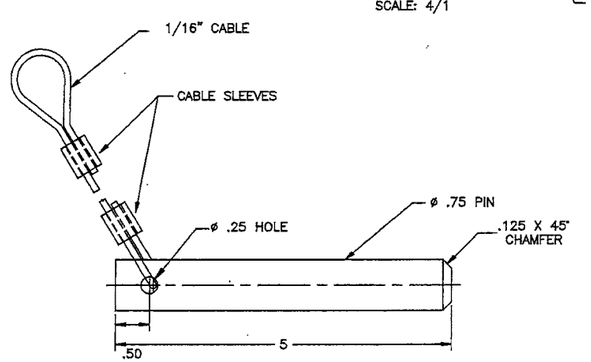

DETAIL "F"

PRODUCT REVISED
as complying with the Florida Building Code
NOA-No. 20-1130.08
Expiration Date 10/14/2024
By
Miami-Dade Product Control

PRODUCT REVISED
as complying with the Florida Building Code
Acceptance No 15-1228.04
Expiration Date 10/14/2019
By
Miami Dade Product Control

MARK A. SAWICKI
LICENSE
No. 72613
12/17/15
STATE OF FLORIDA
PROFESSIONAL ENGINEER

OVERHEAD DOOR CORPORATION
2501 SOUTH STATE HWY 121 BUSINESS
LEWISVILLE, TX 75067

MARK A. SAWICKI, P.E. #72613

THE DRAWINGS AND ALL OTHER INFORMATION CONTAINED HEREIN ARE THE CONFIDENTIAL AND PROPRIETARY PROPERTY OF OVERHEAD DOOR CORPORATION AND ITS AFFILIATED COMPANIES. THIS DRAWING AND INFORMATION, IN WHOLE OR IN PART, MAY NOT BE COPIED IN ANY MANNER OR DISCLOSED TO ANYONE WITHOUT THE PRIOR WRITTEN CONSENT OF OVERHEAD DOOR CORPORATION. NO DISCLOSURE OF ANY OF THIS DRAWING OR INFORMATION IS INTENDED TO OPERATE AS A LICENSE OR AUTHORIZATION TO USE IT FOR ANY PURPOSE WITHOUT THE SPECIFIC WRITTEN CONSENT OF OVERHEAD DOOR CORPORATION.

REF DWG	USED ON

THIRD ANGLE PROJECTION

ASME Y14.100 AND Y14.5 APPLY, UNLESS OTHERWISE SPECIFIED DIMENSIONS ARE IN U.S. CUSTOMARY UNITS.

TOLERANCES UNLESS OTHERWISE SPECIFIED

HOLE DIAMETER	
UNDER .251	+.004/-.003
.251 TO .500	+.006/-.003
OVER .500	+.008/-.003
FRACTIONS	
± 1/16	

WHOLE NUMBERS:	± .25
.X	± .1
.XX	± .03
.XXX	± .010
ANGLES:	± .5°

FINISH: N/A

UNIT OF MEASURE: N/A

The Genuine. The Original. OVERHEAD DOOR

LEWISVILLE, TEXAS

MATERIAL: N/A

NAME	DATE
DRAWN BY: M WOMACK	10/10/03
CHECKED BY: JD FAW	10/10/03
APPROVED BY: L KRUPKE	10/10/03

DRAWING TITLE: SERIES 625, ROLLING SERVICE DOOR 22 FT. DADE COUNTY

DRAWING NUMBER: D- 308134

SCALE: NOTED SHEET 2 OF 2