MIAMI-DADE COUNTY
PRODUCT CONTROL SECTION
11805 SW 26 Street, Room 208
Miami, Florida 33175-2474
T (786) 315-2590 F (786) 315-2599
www.miamidade.gov/economy

DEPARTMENT OF REGULATORY AND ECONOMIC RESOURCES (RER)
BOARD AND CODE ADMINISTRATION DIVISION

NOTICE OF ACCEPTANCE (NOA)

Boston Valley Pottery, Inc.
6860 South Abbott Rd.
Orchard Park, NY 14127

SCOPE:

This NOA is being issued under the applicable rules and regulations governing the use of construction materials. The documentation submitted has been reviewed and accepted by Miami-Dade County RER-Product Control Section to be used in Miami Dade County and other areas where allowed by the Authority Having Jurisdiction (AHJ).

This NOA shall not be valid after the expiration date stated below. The Miami-Dade County Product Control Section (In Miami Dade County) and/or the AHJ (in areas other than Miami Dade County) reserve the right to have this product or material tested for quality assurance purposes. If this product or material fails to perform in the accepted manner, the manufacturer will incur the expense of such testing and the AHJ may immediately revoke, modify, or suspend the use of such product or material within their jurisdiction. RER reserves the right to revoke this acceptance if it is determined by Miami-Dade County Product Control Section that this product or material fails to meet the requirements of the applicable building code.

This product is approved as described herein and has been designed to comply with the Florida Building Code, including the High Velocity Hurricane Zone.

DESCRIPTION: TerraClad® Ceramic Rainscreen Wall Cladding System

APPROVAL DOCUMENT: Drawing No. **12069B-01**, titled "System: Wall Cladding Terra Cotta Panels Horizontal and Vertical" sheets 1 through 10 of 10, dated 05/30/2015, prepared by L. Roberto Lomas, P.E., signed and sealed by Luis R. Lomas, P.E., bearing the Miami-Dade County Product Control revision stamp with the Notice of Acceptance number and expiration date by the Miami-Dade County Product Control Section.

MISSILE IMPACT RATING: Large and Small Missile Impact Resistant

LABELING: Each unit shall bear a permanent label with the manufacturer's name or logo, city, state and following statement: "Miami-Dade County Product Control Approved", unless otherwise noted herein.

RENEWAL of this NOA shall be considered after a renewal application has been filed and there has been no change in the applicable building code negatively affecting the performance of this product.

TERMINATION of this NOA will occur after the expiration date or if there has been a revision or change in the materials, use, and/or manufacture of the product or process. Misuse of this NOA as an endorsement of any product, for sales, advertising or any other purposes shall automatically terminate this NOA. Failure to comply with any section of this NOA shall be cause for termination and removal of NOA.

ADVERTISEMENT: The NOA number preceded by the words Miami-Dade County, Florida, and followed by the expiration date may be displayed in advertising literature. If any portion of the NOA is displayed, then it shall be done in its entirety.

INSPECTION: A copy of this entire NOA shall be provided to the user by the manufacturer or its distributors and shall be available for inspection at the job site at the request of the Building Official.

This NOA **renews** and **revises NOA # 18-0815.01** and consists of this page 1 and evidence pages E-1, E-2 and E-3, as well as approval document mentioned above.

The submitted documentation was reviewed by **Carlos M. Utrera, P.E.**

MIAMI-DADE COUNTY APPROVED

NOTICE OF ACCEPTANCE: EVIDENCE SUBMITTED

1. Evidence submitted under NOA # 15-0514.04

A. DRAWINGS

1. Drawing No. **12069B-01**, titled "System: Wall Cladding Terra Cotta Panels Horizontal and Vertical" sheets 1 through 10 of 10, dated 05/30/2015, prepared by L. Roberto Lomas, P.E., signed and sealed by Luis R. Lomas, P.E.

B. TESTS

1. Test reports on 1) Air Infiltration Test, per FBC, TAS 202-94
2) Uniform Static Air Pressure Test, Loading per FBC TAS 202-94
3) Water Resistance Test, per FBC, TAS 202-94
4) Cyclic Wind Pressure Loading per FBC, TAS 203-94
along with marked-up drawings and installation diagram of 5' by 2' Terra Cotta Panels (Horizontal Panel Orientation), prepared by Quast Consulting and Testing, Inc, Test Report No. **QCT15-3478.01**, dated 03/25/2015, signed and sealed by Brian M. Sasman, P.E.

2. Test reports on 1) Air Infiltration Test, per FBC, TAS 202-94
2) Uniform Static Air Pressure Test, Loading per FBC TAS 202-94
3) Water Resistance Test, per FBC, TAS 202-94
4) Cyclic Wind Pressure Loading per FBC, TAS 203-94
along with marked-up drawings and installation diagram of 2' by 5' Terra Cotta Panels (Vertical Panel Orientation), prepared by Quast Consulting and Testing, Inc, Test Report No. **QCT15-3479.02**, dated 03/25/2015, signed and sealed by Brian M. Sasman, P.E.

3. Test report on Clay Roof Tiles per ASTM C1167-03 of TerraClad Terra Cotta Panels, prepared by Architectural Testing, Inc, Test Report No. **73688.01-106-18**, dated 12/10/2007, signed and sealed by Joseph A. Reed, P.E.

C. CALCULATIONS

1. Anchors calculations prepared by Luis R. Lomas, P.E., dated 03/31/2015, signed and sealed by Luis R. Lomas, P.E.

D. QUALITY ASSURANCE

1. Miami-Dade Department of Regulatory and Economic Resources (RER)

E. MATERIAL CERTIFICATIONS

1. None.

F. STATEMENTS

1. Statement letter of code conformance to the 5th edition (2014) FBC and of no financial interest issued by L. Roberto Lomas, P.E., dated 04/28/2015, signed and sealed by Luis R. Lomas, P.E.

Carlos M. Utrera, P.E.
Product Control Examiner
NOA No. 21-0106.07
Expiration Date: December 24, 2025
Approval Date: March 25, 2021

NOTICE OF ACCEPTANCE: EVIDENCE SUBMITTED

2. Evidence submitted under NOA # 18-0815.01

A. DRAWINGS

1. None

B. TESTS

1. None.

C. CALCULATIONS

1. Anchors calculations prepared by Luis R. Lomas, P.E., dated 11/20/2017, signed and sealed by Luis R. Lomas, P.E.

D. QUALITY ASSURANCE

1. Miami-Dade Department of Regulatory and Economic Resources (RER)

E. MATERIAL CERTIFICATIONS

1. None.

F. STATEMENTS

1. Statement letter of code conformance to the 6th edition (2017) FBC and of no financial interest issued by L. Roberto Lomas, P.E., dated 11/20/2017, signed and sealed by Luis R. Lomas, P.E.

Carlos M. Utrera, P.E.
Product Control Examiner
NOA No. 21-0106.07
Expiration Date: December 24, 2025
Approval Date: March 25, 2021

NOTICE OF ACCEPTANCE: EVIDENCE SUBMITTED

3. New evidence submitted

A. DRAWINGS

1. None

B. TESTS

1. None.

C. CALCULATIONS

1. None.

D. QUALITY ASSURANCE

1. Miami-Dade Department of Regulatory and Economic Resources (RER).

E. MATERIAL CERTIFICATIONS

1. None.

F. STATEMENTS

1. Statement letter of code conformance to the 7th edition (2020) FBC and of no financial interest issued by L. Roberto Lomas, P.E., dated 03/18/2021, signed and sealed by Luis R. Lomas, P.E.

Carlos M. Utrera, P.E.
Product Control Examiner
NOA No. 21-0106.07
Expiration Date: December 24, 2025
Approval Date: March 25, 2021

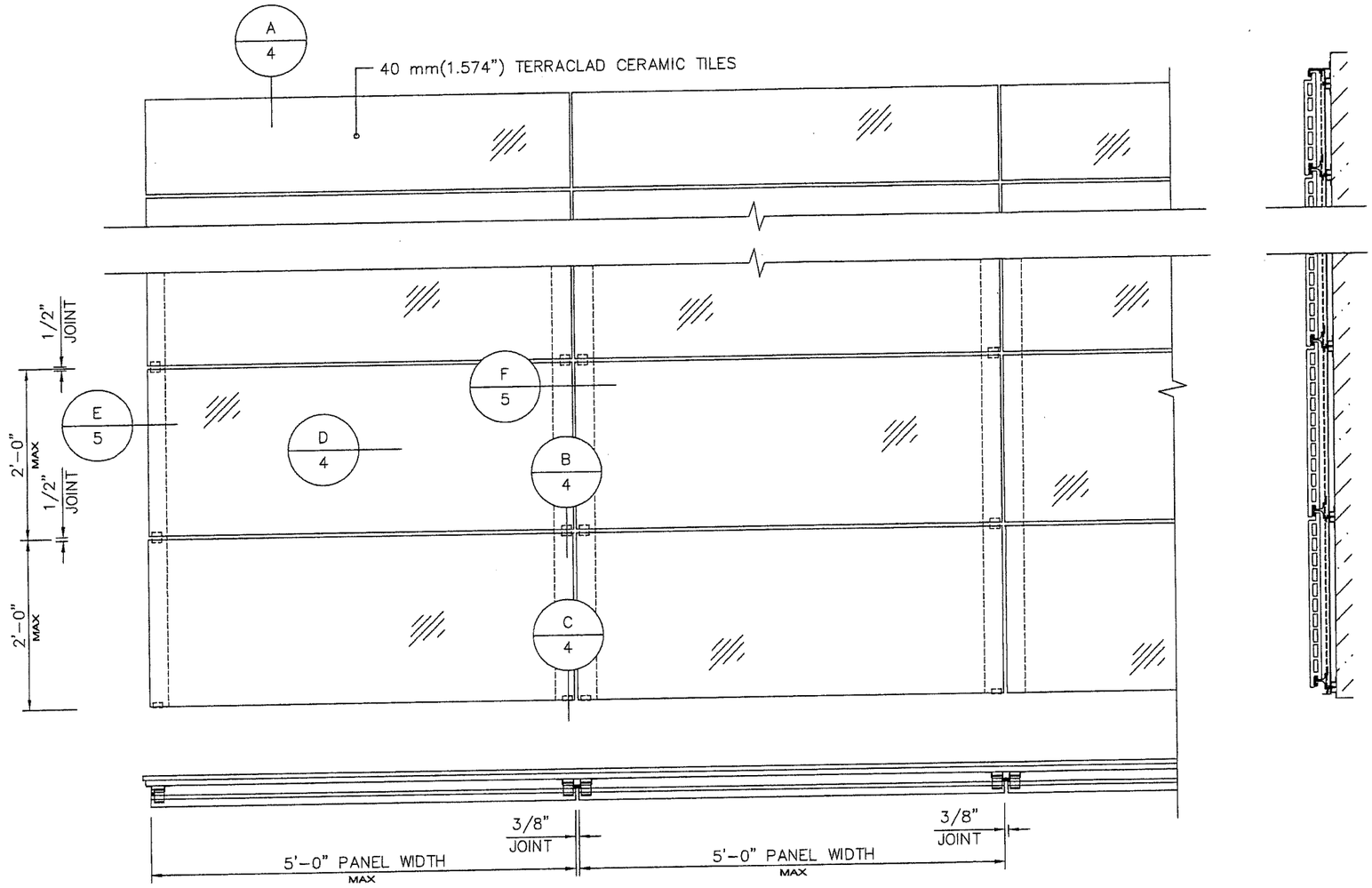

HORIZONTAL PANEL SYSTEM

SEE CHART #1, SHEET 3 FOR RATINGS

TERRACLAD RAINSCREEN CLADDING SYSTEM
TERRACOTA TILES ANCHORED TO FBC WALL ASSEMBLY FOR EXTERIOR CLADDING.

APPROVAL APPLIES TO MULTIPLE UNIT INSTALLATIONS

MAX. DESIGN LOAD = + 80.0 PSF
− 80.0 PSF

MAX. HAT CHANNEL SPACING = 24 IN.
MAX. ATTACHMENT CLIP SPACING = 24 IN.
MAX. VERTICAL TRACK SPACING = 60 IN.
MAX. TILE SIZE = 24" HIGH X 60" WIDE

THIS PRODUCT HAS BEEN DESIGNED AND TESTED TO COMPLY WITH THE REQUIREMENTS OF THE FLORIDA BUILDING CODE INCLUDING THE HIGH VELOCITY HURRICANE ZONE (HVHZ)

ANCHORS SHALL BE AS LISTED, SPACED AS SHOWN ON DETAILS, ANCHORS EMBEDMENT TO BASE MATERIAL SHALL BE BEYOND WALL DRESSING OR STUCCO.

ANCHORING OR LOADING CONDITIONS NOT SHOWN IN THESE DETAILS ARE NOT PART OF THIS APPROVAL.

MATERIALS INCLUDING BUT NOT LIMITED TO STEEL/METAL SCREWS, THAT COME INTO CONTACT WITH OTHER DISSIMILAR MATERIALS SHALL MEET THE REQUIREMENTS OF THE FLORIDA BUILDING CODE.

PRODUCT REVISED
as complying with the Florida Building Code
NOA–No. 21-0106.07
Expiration Date 12/24/2025
By
Miami–Dade Product Control

PRODUCT REVISED
as complying with the Florida Building Code
NOA–No. 18-0815.01
Expiration Date 12/24/2020
By
Miami–Dade Product Control

Approved as complying with the Florida Building Code
Date 12/24/2015
NOA# 15-0514.04
Miami Dade Product Control
By

SIGNED: 09/21/2015

LUIS R. LOMAS
LICENSE
No. 62514
STATE OF FLORIDA
PROFESSIONAL ENGINEER

Mark	Date	Revision
△	4/21/15	NOA SUB UPDATES
△		
△		
△		
△		
△		

PRODUCT DESCRIPTION:
SYSTEM: WALL CLADDING
TERRA COTTA PANELS
HORIZONTAL and VERTICAL

Boston Valley Terra Cotta
6860 S ABBOT RD.
ORCHARD PARK, NY 14127
1-716-649-7490
www.terraclad.com

L. Roberto Lomas P.E.
233 W. Main Street
Danville, VA 0661
(434)-688-0609
www.lrlomaspe.com
FL No.# 62514

Drawn By:	WJH&A
Date Drawn:	5/30/2015
Checked By:	
D-Scale:	1"=1'-0"
B-Scale:	1/2"=1'-0"
DRAWING:	12069B.01
Title:	
Sheet NO:	1 of 10

Last Saved: Sep 23, 2015 - 11:11am

VERTICAL PANEL SYSTEM

SEE CHARTS 2, 3, 4, 5 AND 6 SHEET 7 FOR RATINGS

ASTM C 1167-03 Standard Specification for Clay Roof Tiles (with modification as required to ASTM C 67) DATA	
TEST	RESULT
5 HOUR COLD WATER ABSORPTION	6.1%
24 HOUR COLD WATER ABSORBTION	6.3%
1 HOUR BOILING WATER ABSORBTION	8.8%
2 HOUR BOILING WATER ABSORBTION	8.8%
5 HOUR BOILING WATER ABSORBTION	9.5%
FREEZE/THAW	NO BREAKAGE OR CRACKING WITH +0.7% CHANGE
WET TRANSVERSE STRENGTH	1,031 LBS.
EFFLORESCENCE	NO CHANGE - "NOT EFFECTED"
PERMEABILITY	NO WATER DROPLETS HAVE FALLEN FROM THE UNDERSIDE OF THE TILE

TERRACLAD RAINSCREEN CLADDING SYSTEM
TERRACOTA TILES ANCHORED TO FBC APPROVED WALL ASSEMBLY FOR EXTERIOR CLADDING.

APPROVAL APPLIES TO MULTIPLE UNIT INSTALLATIONS
MAX. DESIGN LOAD = + 80.0 PSF
− 80.0 PSF

MAX. ATTACHMENT CLIP SPACING = 9 IN.
MAX. TRACK SPACING = 60 IN.
MAX. TILE SIZE = 24" HIGH X 60" WIDE

THIS PRODUCT HAS BEEN DESIGNED AND TESTED TO COMPLY WITH THE REQUIREMENTS OF THE FLORIDA BUILDING CODE INCLUDING THE HIGH VELOCITY HURRICANE ZONE (HVHZ)

ANCHORS SHALL BE AS LISTED, SPACED AS SHOWN ON DETAILS, ANCHORS EMBEDMENT TO BASE MATERIAL SHALL BE BEYOND WALL DRESSING OR STUCCO.

ANCHORING OR LOADING CONDITIONS NOT SHOWN IN THESE DETAILS ARE NOT PART OF THIS APPROVAL.

MATERIALS INCLUDING BUT NOT LIMITED TO STEEL/METAL SCREWS, THAT COME INTO CONTACT WITH OTHER DISSIMILAR MATERIALS SHALL MEET THE REQUIREMENTS OF THE FLORIDA BUILDING CODE.

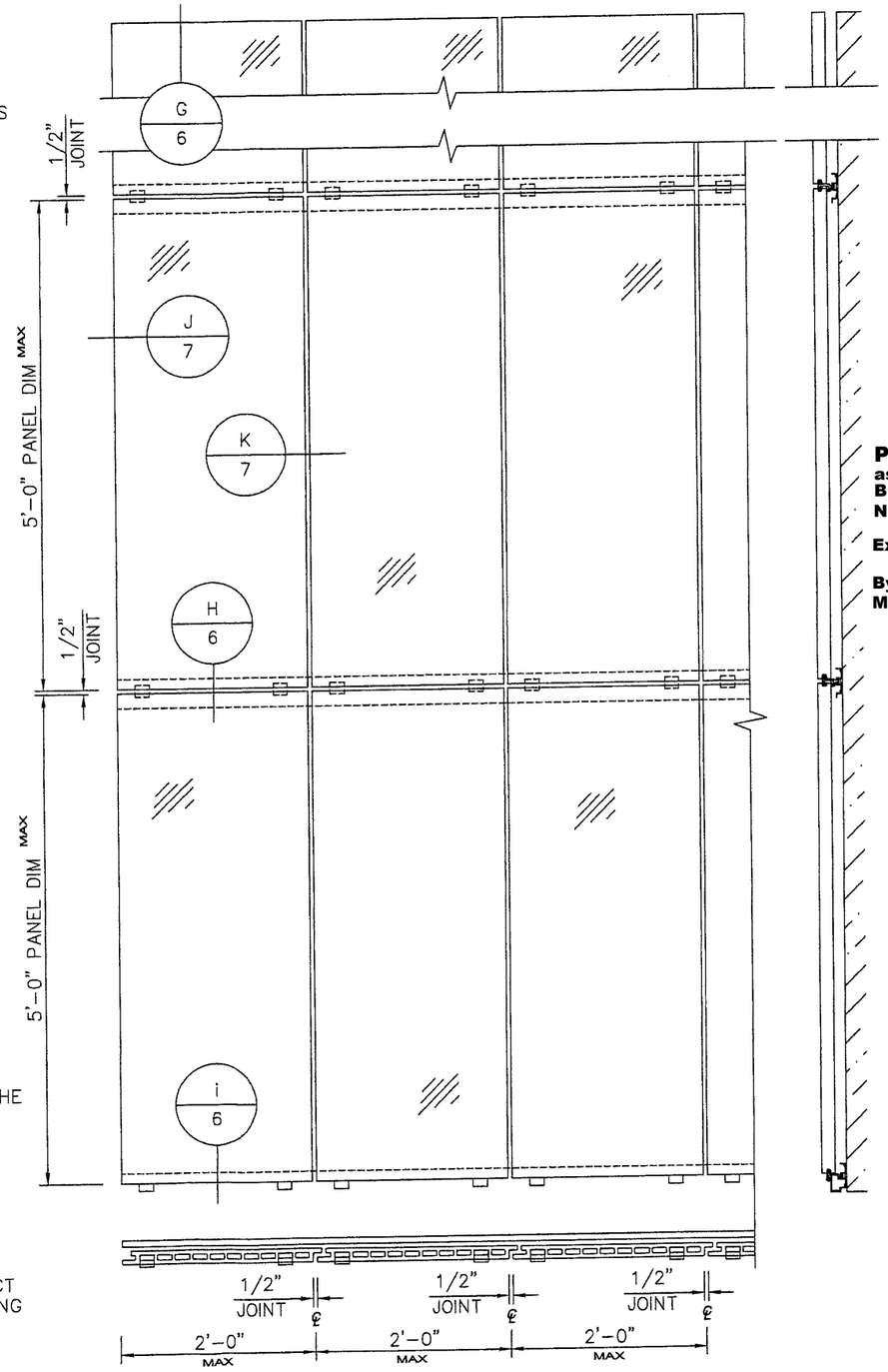

PRODUCT REVISED
as complying with the Florida Building Code
NOA-No. 21-0106.07
Expiration Date 12/24/2025
By
Miami-Dade Product Control

PRODUCT REVISED
as complying with the Florida Building Code
NOA-No. 18-0815.01
Expiration Date 12/24/2020
By
Miami-Dade Product Control

Approved as complying with the Florida Building Code
Date 12/24/2015
NOA# 15-0514.04
Miami Dade Product Control
By

SIGNED: 09/21/2015

LUIS R. LOMAS LICENSE No. 62514 STATE OF FLORIDA PROFESSIONAL ENGINEER

Mark	Date	Revision
△	4/21/15	NOA SUB UPDATES
△		
△		
△		
△		
△		

PRODUCT DESCRIPTION:
SYSTEM: WALL CLADDING
TERRA COTTA PANELS
HORIZONTAL and VERTICAL

Boston Valley Terra Cotta
6860 S ABBOT RD.,
ORCHARD PARK, NY 14127
1-716-649-7490
www.terraclad.com

L. Roberto Lomas P.E.
233 W. Main Street
Danville, VA 0661
(434)-688-0609
www.lrlomaspe.com
FL No.# 62514

Drawn By:	WJH&A
Date Drawn:	5/30/2015
Checked By:	
D-Scale:	1"=1'-0"
B-Scale:	1/2"=1'-0"
DRAWING:	12069B.01
Title:	
Sheet NO:	2 of 10

Last Saved: Sep 23, 2015 - 11:11am

VERTICAL TRACK SYSTEM
HORIZONTAL PANEL ORIENTATION

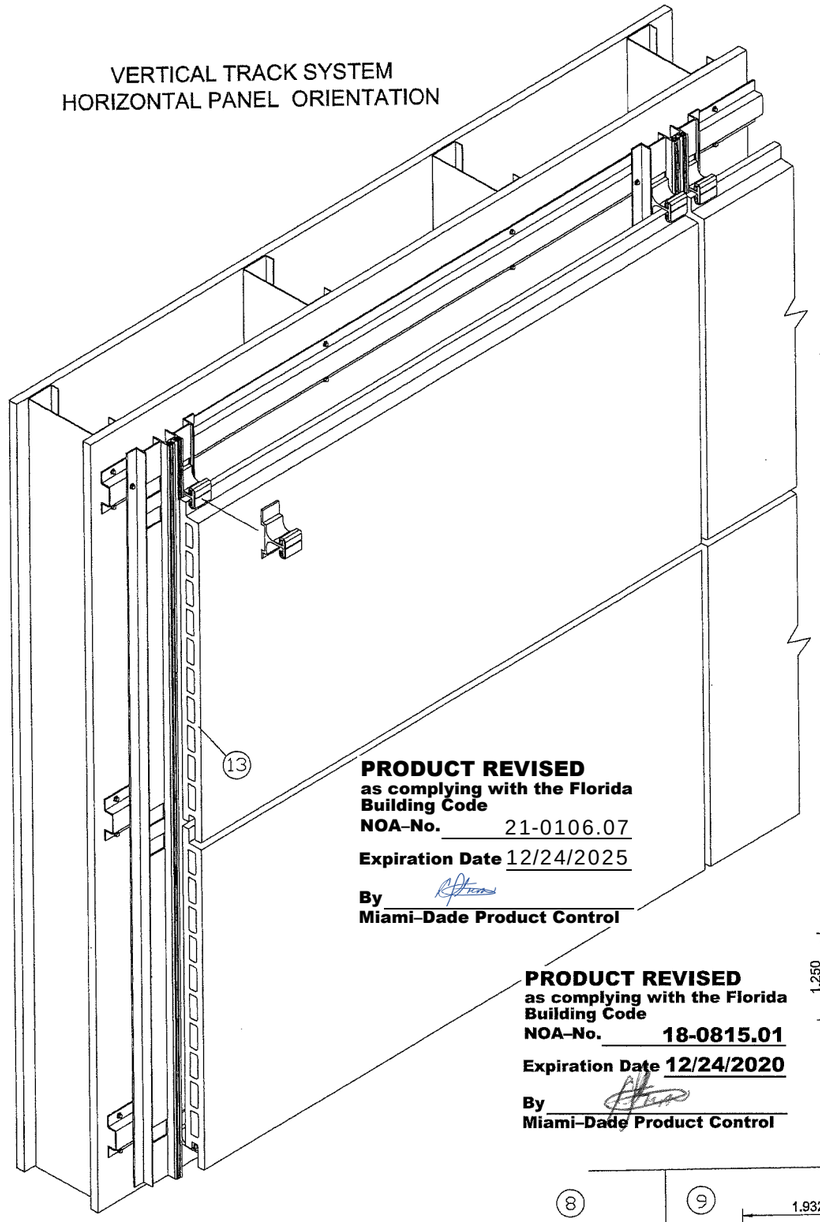

PRODUCT REVISED
as complying with the Florida Building Code
NOA-No. 21-0106.07
Expiration Date 12/24/2025
By
Miami-Dade Product Control

PRODUCT REVISED
as complying with the Florida Building Code
NOA-No. 18-0815.01
Expiration Date 12/24/2020
By
Miami-Dade Product Control

BILL OF MATERIALS

ITEM NO.	QUANTITY	DESCRIPTION	MATERIAL
1	AS REQ'D	ROLLED FORMED HAT Fy=36ksi Fu=58ksi	STEEL
2		VERTICAL TRACK	ALUMINUM 6063-T6
3		VERTICAL CENTER TRACK	
4		HORIZONTAL PANEL CLIP A	
5		HORIZONTAL CENTER TRACK (VERTICAL PANELS)	
6		HORIZONTAL PANEL CLIP B	
7		HORIZONTAL TRACK (VERTICAL PANELS)	
8		HORIZONTAL PANEL CLIP C	
9		PANEL CLIP (VERTICAL PANELS)	
10		PANEL CLIP GASKET	SILICONE
11		VERTICAL TRACK GASKET	
12		PANEL CLIP COMPRESSION GASKET	EPDM
13		40 MM TERRA COTTA TILE PANEL: 11.3 LBS/FT^2	–

Chart #1
Design pressure chart (psf)

Panel Height (in)	Panel Width (in)			
	24	**36**	**48**	**60**
6	80.0	80.0	65.3	52.2
8	80.0	80.0	65.3	52.2
10	80.0	80.0	65.3	52.2
12	80.0	80.0	65.3	52.2
14	80.0	80.0	65.3	52.2
16	80.0	80.0	65.3	52.2
18	80.0	80.0	65.3	52.2
20	80.0	80.0	65.3	52.2
22	80.0	80.0	65.3	52.2
24	80.0	80.0	65.3	52.2

For panels installed with track and hat channel

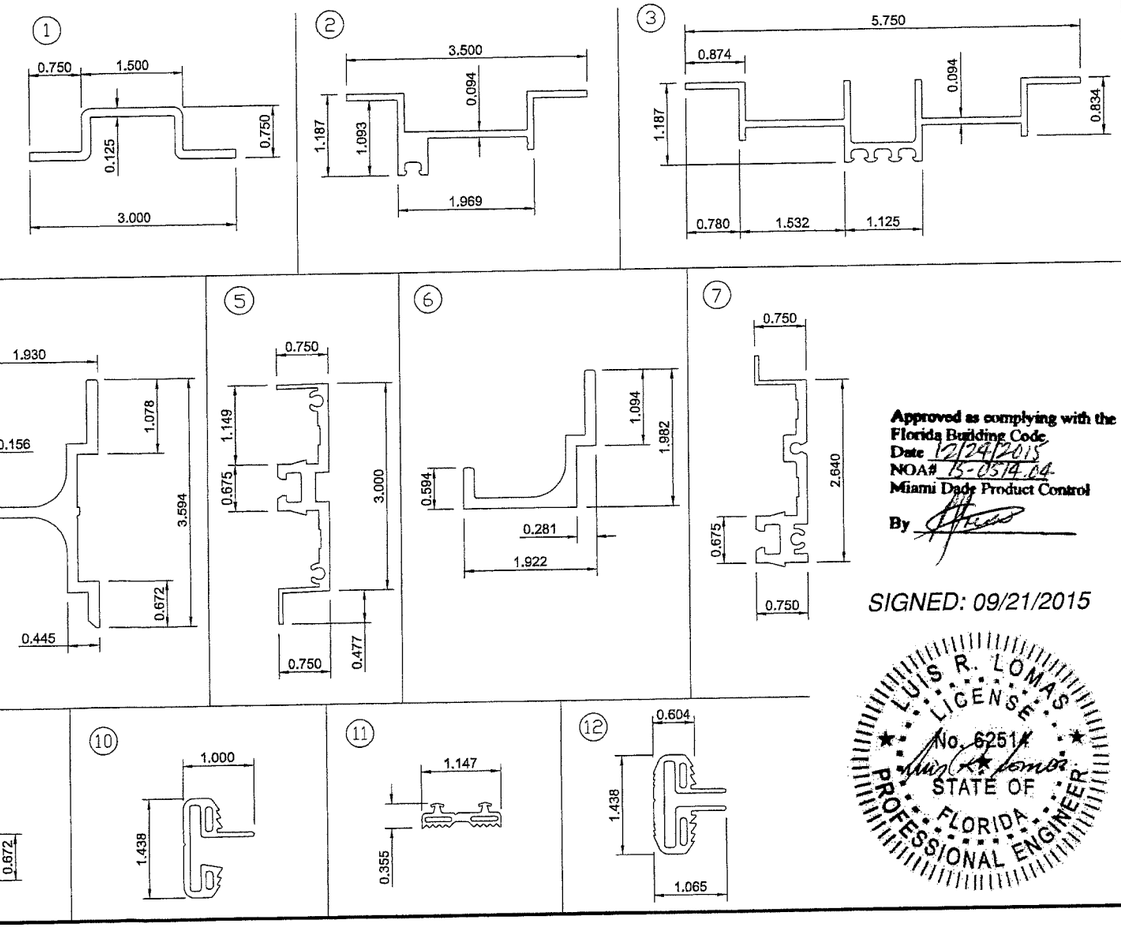

Approved as complying with the Florida Building Code
Date 12/24/2015
NOA# 15-0514.04
Miami Dade Product Control
By

SIGNED: 09/21/2015

LUIS R. LOMAS
LICENSE
No. 62514
STATE OF FLORIDA
PROFESSIONAL ENGINEER

Mark	Date	Revision
1	4/21/15	NOA SUB UPDATES
2		
3		
4		
5		
6		
7		

PRODUCT DESCRIPTION:
SYSTEM: WALL CLADDING
TERRA COTTA PANELS
HORIZONTAL and VERTICAL

Boston Valley Terra Cotta
6860 S ABBOT RD,
ORCHARD PARK, NY 14127
1-716-649-7490
www.terraclad.com

L. Roberto Lomas P.E.
233 W. Main Street
Danville, VA 0661
(434)-688-0609
FL No.# 62514
www.irlomaspe.com

Drawn By:	WJH&A
Date Drawn:	5/30/2015
Checked By:	
D-Scale:	Full
B-Scale:	6"=1'-0"
DRAWING:	12069B.01
Title:	
Sheet NO:	3 of 10

Last Saved: Sep 23, 2015 – 11:02am

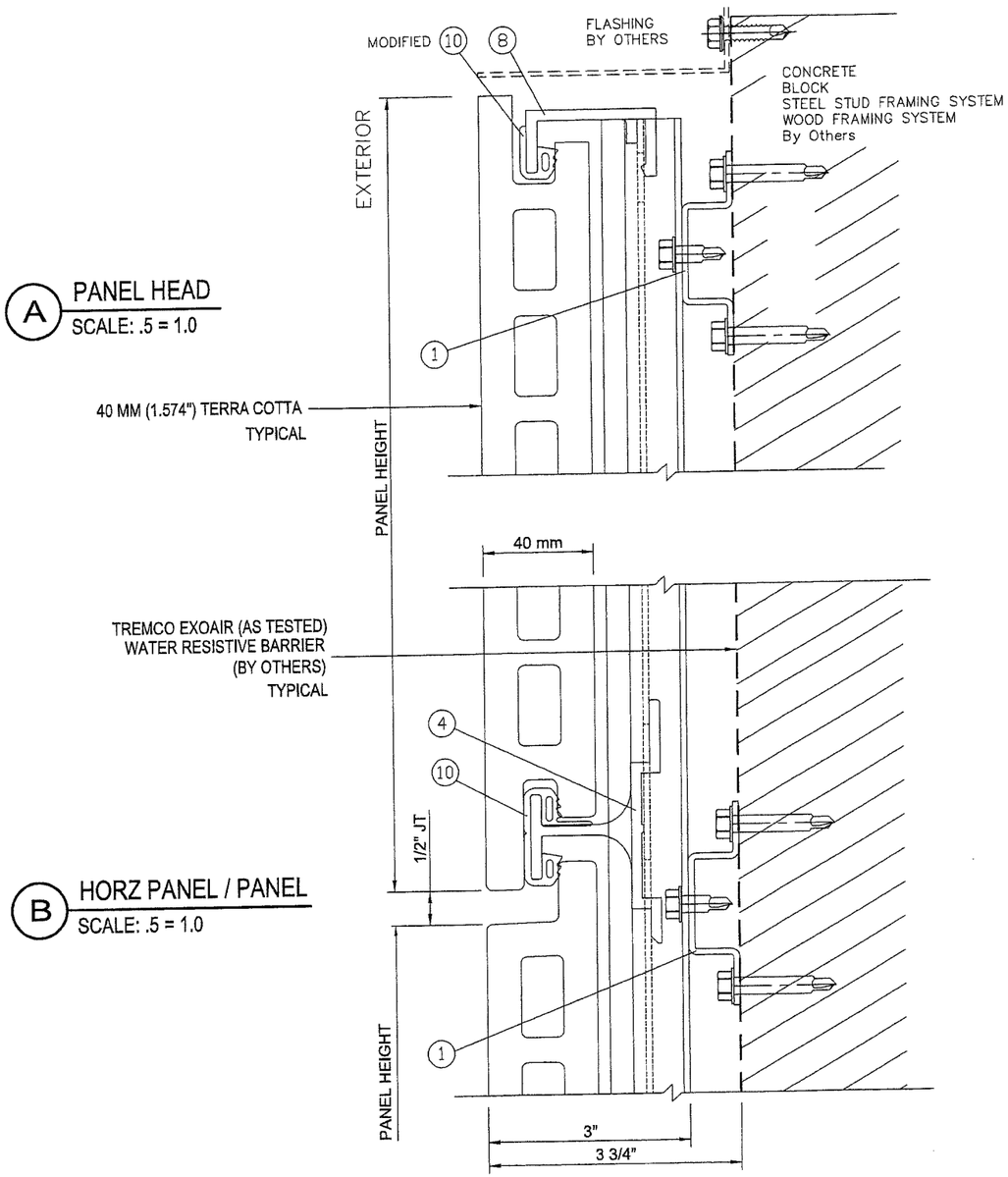

A PANEL HEAD
SCALE: .5 = 1.0

B HORZ PANEL / PANEL
SCALE: .5 = 1.0

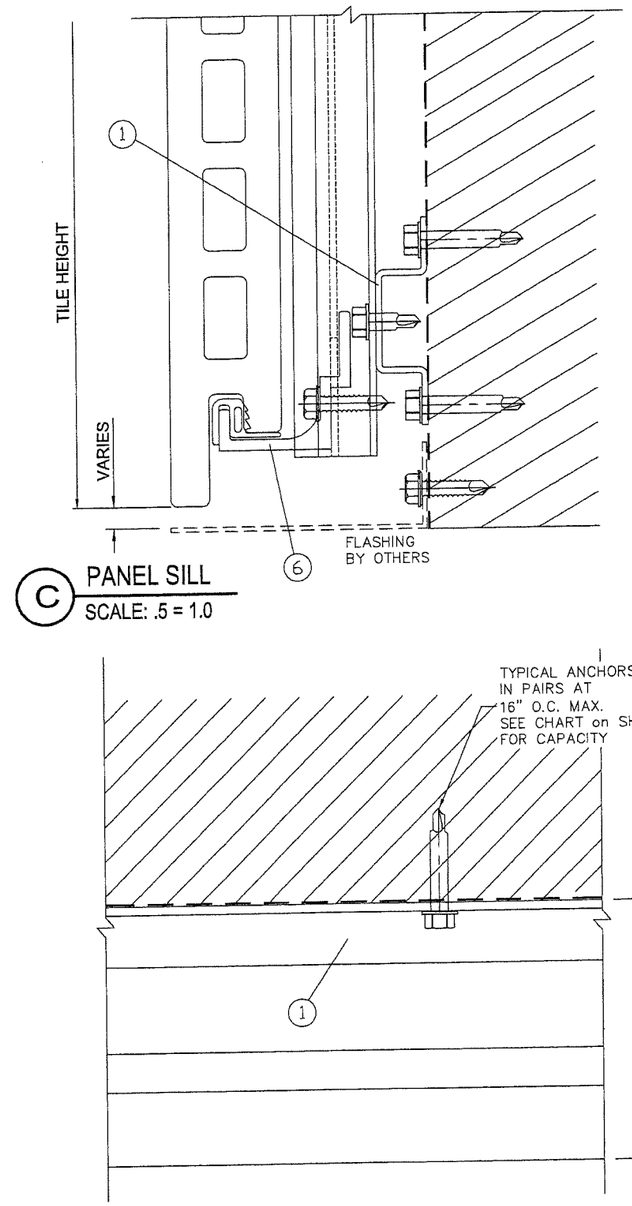

C PANEL SILL
SCALE: .5 = 1.0

D CENTER of PANEL
SCALE: .5 = 1.0

PRODUCT REVISED
as complying with the Florida Building Code
NOA-No. 21-0106.07
Expiration Date 12/24/2025
By
Miami-Dade Product Control

PRODUCT REVISED
as complying with the Florida Building Code
NOA-No. **18-0815.01**
Expiration Date **12/24/2020**
By
Miami-Dade Product Control

Approved as complying with the Florida Building Code
Date 12/24/2015
NOA# 15-0514.04
Miami Dade Product Control
By

SIGNED: 09/21/2015

LUIS R. LOMAS
LICENSE
No. 62514
STATE OF
FLORIDA
PROFESSIONAL ENGINEER

Mark	Date	Revision
1	4/21/15	NOA SUB UPDATES
2		
3		
4		
5		
6		

PRODUCT DESCRIPTION:
SYSTEM: WALL CLADDING
TERRA COTTA PANELS
HORIZONTAL and VERTICAL

Boston Valley Terra Cotta
6860 S ABBOT RD,
ORCHARD PARK, NY 14127
1-716-649-7490
www.terraclad.com

L. Roberto Lomas P.E.
233 W. Main Street
Danville, VA 0661
(434)-688-0609
www.lrlomaspe.com
FL No.# 62514

Drawn By:	WJH&A
Date Drawn:	5/30/2015
Checked By:	
D-Scale:	Full
B-Scale:	6"=1'-0"
DRAWING:	12069B.01
Title:	
Sheet NO:	4 of 10

Last Saved: Sep 23, 2015 – 11:02am

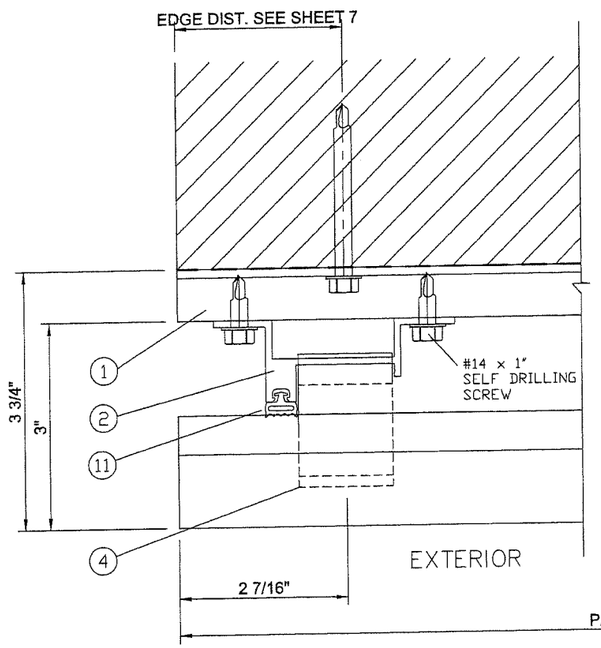

E PERIMETER PANEL CLIP
SCALE: .5 = 1.0

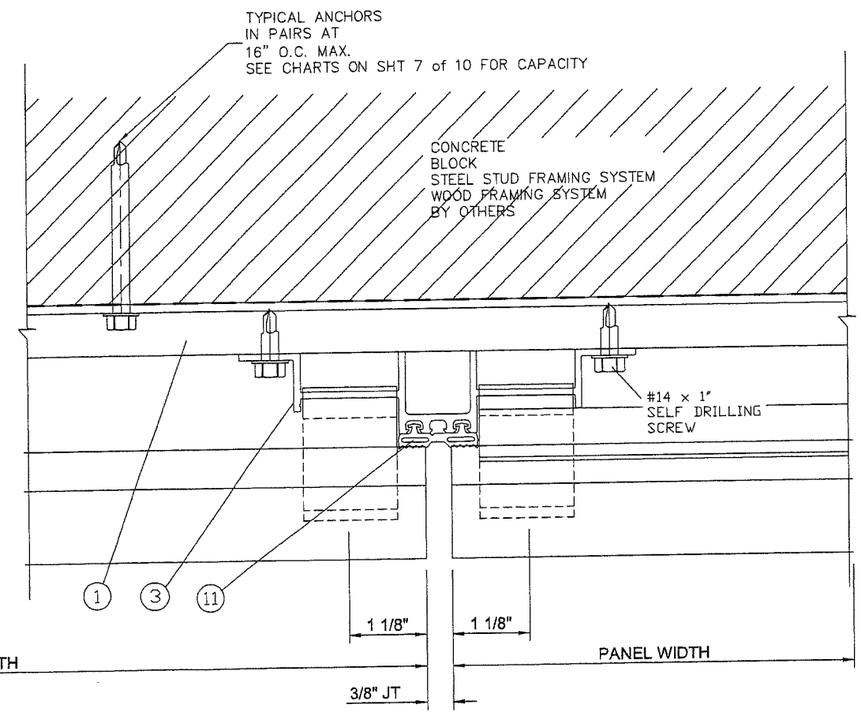

F VERTICAL PANEL / PANEL
SCALE: .5 = 1.0

PRODUCT REVISED
as complying with the Florida Building Code
NOA-No. 21-0106.07
Expiration Date 12/24/2025
By
Miami-Dade Product Control

PRODUCT REVISED
as complying with the Florida Building Code
NOA-No. 18-0815.01
Expiration Date 12/24/2020
By
Miami-Dade Product Control

Approved as complying with the Florida Building Code
Date 12/24/2015
NOA# 15-0314.04
Miami Dade Product Control
By

SIGNED: 09/21/2015

LUIS R. LOMAS
LICENSE
No. 62514
STATE OF
FLORIDA
PROFESSIONAL ENGINEER

Mark	Date	Revision
1	4/21/15	NOA SUB UPDATES

PRODUCT DESCRIPTION:
SYSTEM: WALL CLADDING
TERRA COTTA PANELS
HORIZONTAL and VERTICAL

Boston Valley Terra Cotta
6860 S ABBOT RD,
ORCHARD PARK, NY 14127
1-716-649-7490
www.terraclad.com

L. Roberto Lomas P.E.
233 W. Main Street
Danville, VA 0661
(434)-688-0609
FL No.# 62514
www.lrlomaspe.com

Drawn By:	WJH&A
Date Drawn:	5/30/2015
Checked By:	
D-Scale:	Full
B-Scale:	6"=1'-0"
DRAWING:	12069B.01
Title:	
Sheet NO:	5 of 10

Last Saved: Sep 23, 2015 - 11:02am

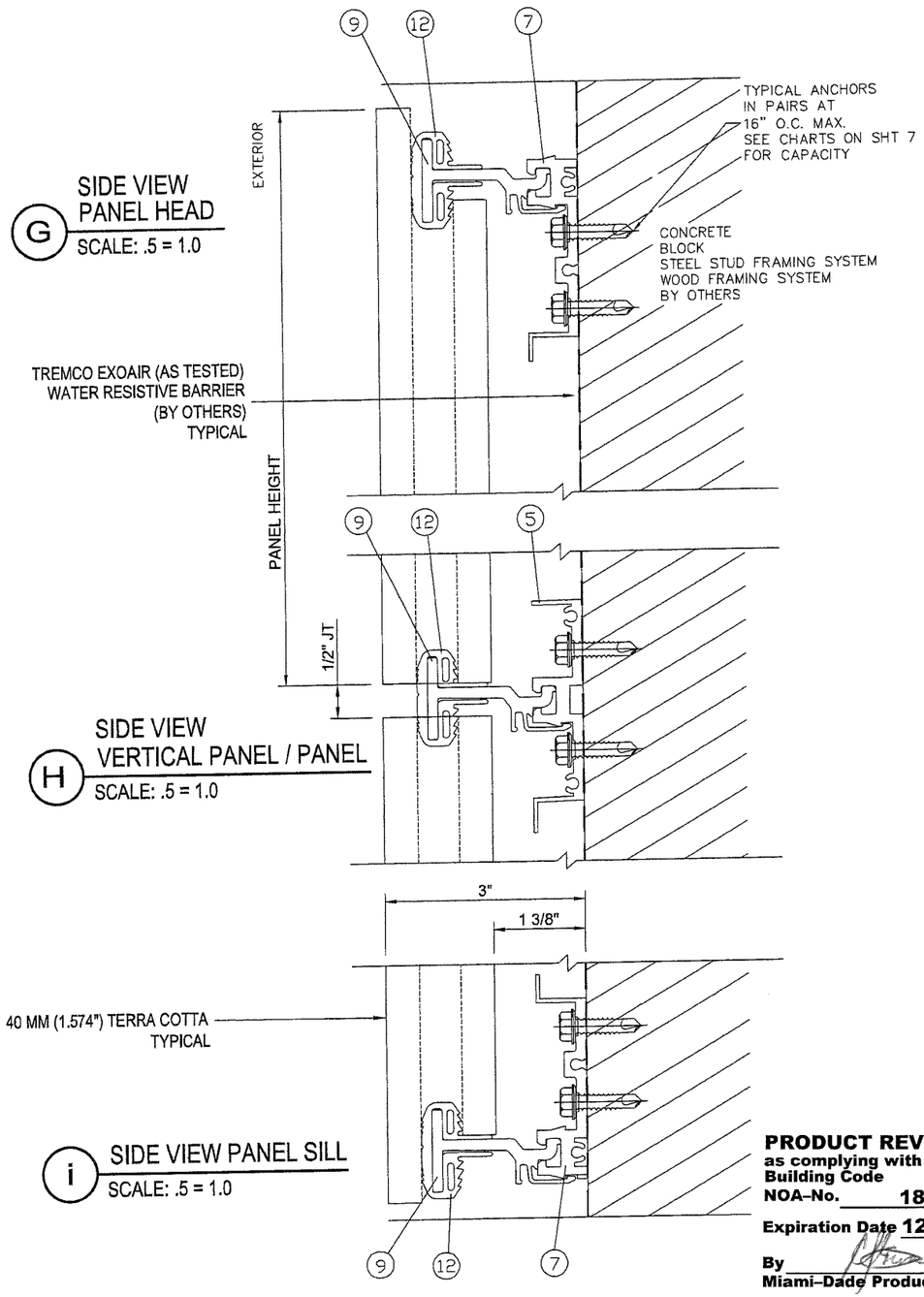

G SIDE VIEW PANEL HEAD
SCALE: .5 = 1.0

H SIDE VIEW VERTICAL PANEL / PANEL
SCALE: .5 = 1.0

i SIDE VIEW PANEL SILL
SCALE: .5 = 1.0

HORIZONTAL TRACK SYSTEM
VERTICAL PANEL ORIENTATION

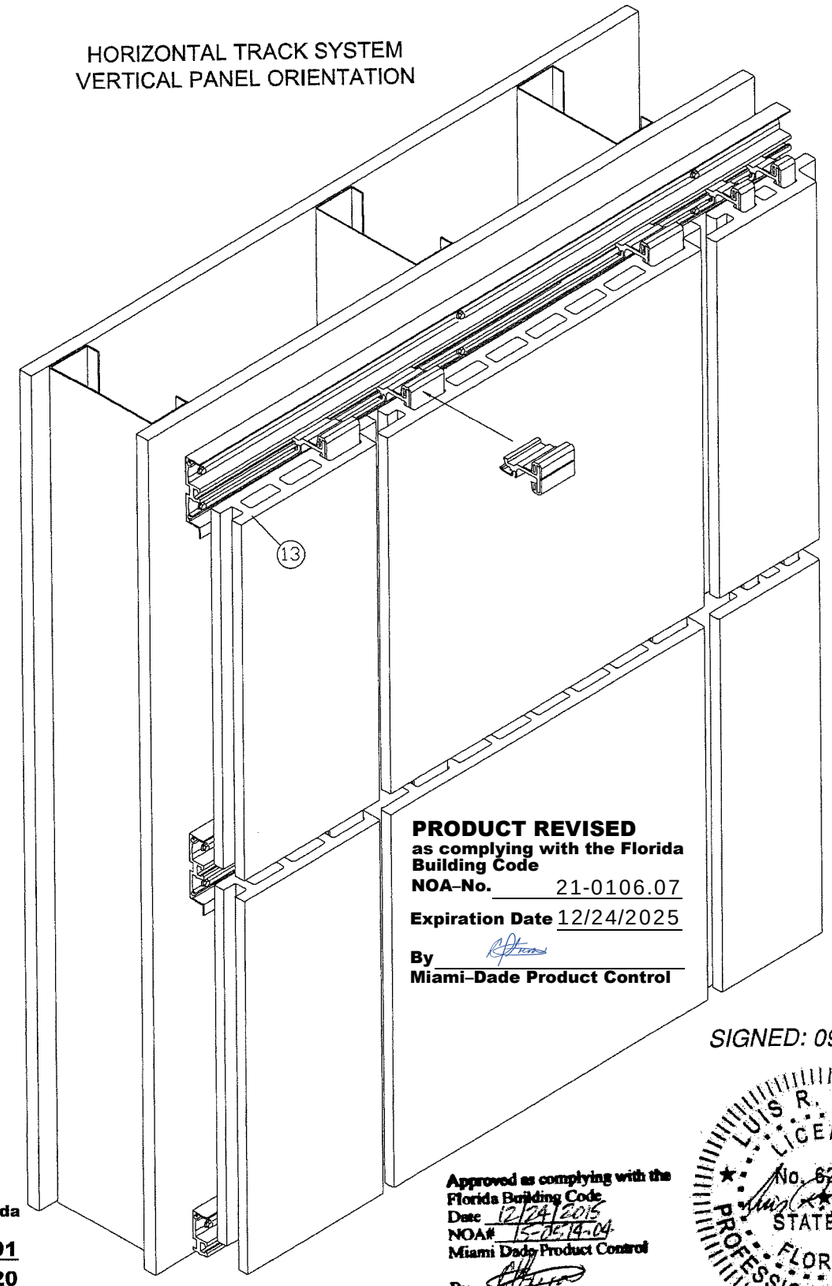

PRODUCT REVISED
as complying with the Florida Building Code
NOA-No. 21-0106.07
Expiration Date 12/24/2025
By
Miami-Dade Product Control

PRODUCT REVISED
as complying with the Florida Building Code
NOA-No. 18-0815.01
Expiration Date 12/24/2020
By
Miami-Dade Product Control

Approved as complying with the Florida Building Code
Date 12/24/2015
NOA# 15-0215.04
Miami Dade Product Control
By

SIGNED: 09/21/2015

LUIS R. LOMAS
LICENSE
No. 62514
STATE OF
FLORIDA
PROFESSIONAL ENGINEER

Mark	Date	Revision
1	4/21/15	NOA SUB UPDATES
2		
3		
4		
5		
6		

PRODUCT DESCRIPTION:
SYSTEM: WALL CLADDING
TERRA COTTA PANELS
HORIZONTAL and VERTICAL

Boston Valley Terra Cotta
6860 S ABBOT RD,
ORCHARD PARK, NY 14127
1-716-649-7490
www.terraclad.com

L. Roberto Lomas P.E.
233 W. Main Street
Danville, VA 0661
(434)-688-0609
www.lrlomaspe.com
FL No.# 62514

Drawn By:	WJH&A
Date Drawn:	5/30/2015
Checked By:	
D-Scale:	Full
B-Scale:	6"=1'-0"
DRAWING:	12069B.01
Title:	
Sheet NO:	6 of 10

Last Saved: Sep 23, 2015 - 11:02am

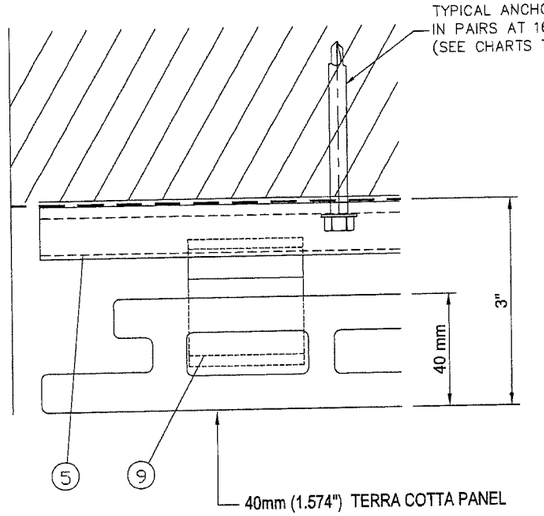

J TOP VIEW OF END PANEL CONNECTION
SCALE: .5 = 1.0

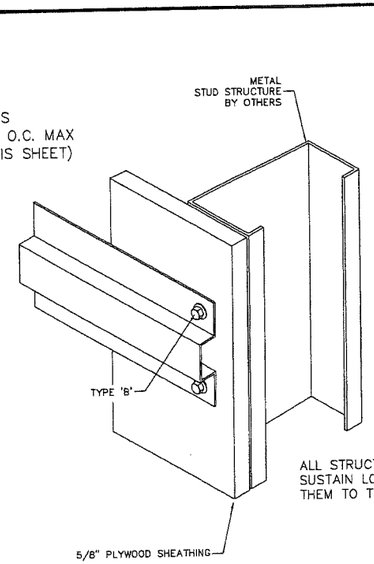

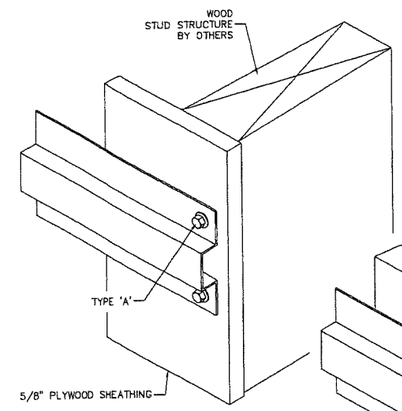

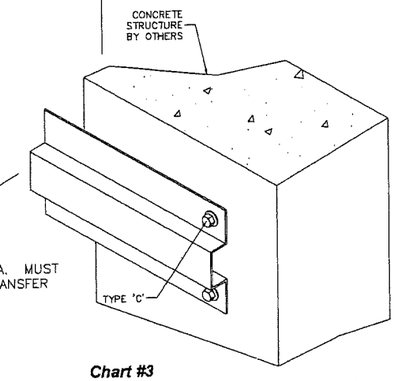

ALL STRUCTURES NOT BY BOSTON VALLEY TERRA COTTA. MUST SUSTAIN LOADS IMPOSED BY CLADDING SYSTEM AND TRANSFER THEM TO THE BUILDING.

TYPICAL ANCHORS:

TYPE 'A' #14 WOOD SCREWS
INTO WOOD STRUCTURES
2" MIN. PENETRATION INTO WOOD

TYPE 'B' #14 SMS OR SELF DRILLING SCREWS
INTO METAL STUDS 16 GA min

TYPE 'C' 1/4" DIA. ELCO ULTRACON
DIRECTLY INTO MASONRY OR CONCRETE
1-1/4" MIN. EMBED INTO MASONRY OR CONCRETE

TYPCIAL EDGE DISTANCE
INTO CONCRETE AND MASONRY = 3" MIN.
INTO WOOD STRUCTURE = 5/8" MIN.
INTO METAL STRUCTURE = 1" MIN.

CONCRETE f'c = 3000 PSI MIN.
MASONRY f'm = 2000 PSI MIN.

STEEL STUD: Fy min = 50 ksi
WOOD: MINIMUM SPECIFIC GRAVITY OF G=0.42

PRODUCT REVISED
as complying with the Florida Building Code
NOA-No. 18-0815.01
Expiration Date 12/24/2020
By
Miami-Dade Product Control

Chart #2
Design pressure chart (psf)

Panel Height (in)	Panel Width (in)			
	24	36	48	60
6	80.0	80.0	80.0	78.0
8	80.0	80.0	80.0	78.0
10	80.0	80.0	80.0	78.0
12	80.0	80.0	80.0	78.0
14	80.0	80.0	80.0	78.0
16	80.0	80.0	80.0	78.0
18	80.0	80.0	80.0	78.0
20	80.0	80.0	80.0	78.0
22	80.0	80.0	80.0	78.0
24	80.0	80.0	80.0	78.0

For panels installed with horizontal track system into wood framing

Chart #3
Design pressure chart (psf)

Panel Height (in)	Panel Width (in)			
	24	36	48	60
6	80.0	80.0	80.0	73.3
8	80.0	80.0	80.0	73.3
10	80.0	80.0	80.0	73.3
12	80.0	80.0	80.0	73.3
14	80.0	80.0	80.0	73.3
16	80.0	80.0	80.0	73.3
18	80.0	80.0	80.0	73.3
20	80.0	80.0	80.0	73.3
22	80.0	80.0	80.0	73.3
24	80.0	80.0	80.0	73.3

For panels installed with horizontal track system into metal framing

Chart #4
Design pressure chart (psf)

Panel Height (in)	Panel Width (in)			
	24	36	48	60
6	80.0	70.0	52.5	42.0
8	80.0	70.0	52.5	42.0
10	80.0	70.0	52.5	42.0
12	80.0	70.0	52.5	42.0
14	80.0	70.0	52.5	42.0
16	80.0	70.0	52.5	42.0
18	80.0	70.0	52.5	42.0
20	80.0	70.0	52.5	42.0
22	80.0	70.0	52.5	42.0
24	80.0	70.0	52.5	42.0

For panels installed with horizontal track system into hollow block masonry

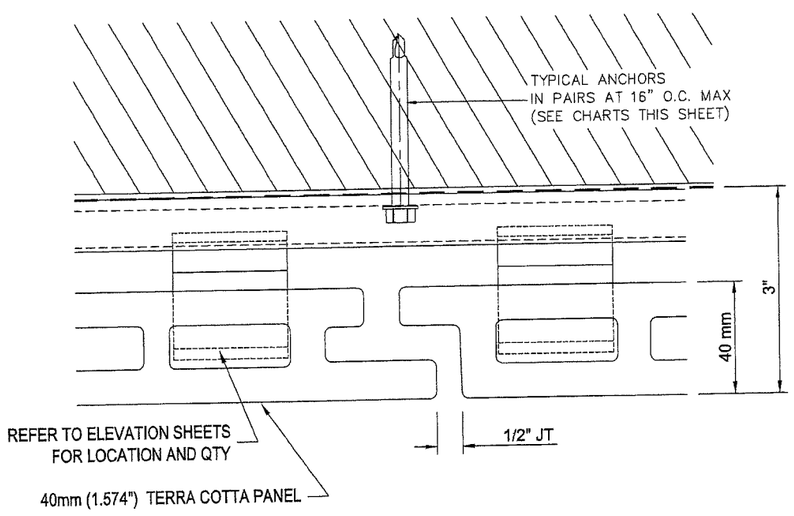

K TOP VIEW AT PANEL / PANEL CONNECTION
SCALE: .5 = 1.0

PRODUCT REVISED
as complying with the Florida Building Code
NOA-No. 21-0106.07
Expiration Date 12/24/2025
By
Miami-Dade Product Control

Approved as complying with the Florida Building Code
Date 12/24/2015
NOA# 15-0514.02
Miami Dade Product Control
By

Chart #5
Design pressure chart (psf)

Panel Height (in)	Panel Width (in)			
	24	36	48	60
6	80.0	80.0	80.0	80.0
8	80.0	80.0	80.0	80.0
10	80.0	80.0	80.0	80.0
12	80.0	80.0	80.0	80.0
14	80.0	80.0	80.0	80.0
16	80.0	80.0	80.0	80.0
18	80.0	80.0	80.0	80.0
20	80.0	80.0	80.0	80.0
22	80.0	80.0	80.0	80.0
24	80.0	80.0	80.0	80.0

For panels installed with horizontal track system into concrete

Chart #6
Design pressure 80psf
Maximum spacing (in)

Panel Height (in)	Panel Width (in)			
	24	36	48	60
6	16.0	14.0	10.5	8.4
8	16.0	14.0	10.5	8.4
10	16.0	14.0	10.5	8.4
12	16.0	14.0	10.5	8.4
14	16.0	14.0	10.5	8.4
16	16.0	14.0	10.5	8.4
18	16.0	14.0	10.5	8.4
20	16.0	14.0	10.5	8.4
22	16.0	14.0	10.5	8.4
24	16.0	14.0	10.5	8.4

For panels installed with horizontal track system into hollow block masonry

SIGNED: 09/21/2015

LUIS R. LOMAS
LICENSE
No. 62514
STATE OF FLORIDA
PROFESSIONAL ENGINEER

Mark	Date	Revision
△	4/21/15	NOA SUB UPDATES
△		
△		
△		
△		
△		

PRODUCT DESCRIPTION:
SYSTEM: WALL CLADDING
TERRA COTTA PANELS
HORIZONTAL and VERTICAL

Boston Valley Terra Cotta
6860 S ABBOT RD,
ORCHARD PARK, NY 14127
1-716-649-7490
www.terraclad.com

L. Roberto Lomas P.E.
233 W. Main Street
Danville, VA 0661
(434)-688-0609
FL No.# 62514
www.inlomaspe.com

Drawn By:	WJH&A
Date Drawn:	5/30/2015
Checked By:	
D-Scale:	Full
B-Scale:	6"=1'-0"
DRAWING:	12069B.01
Title:	
Sheet NO:	7 of 10

Last Saved: Sep 23, 2015 - 11:02am

HORIZONTAL PANELS ORIENTATION OPTIONAL CORNER DETAILS

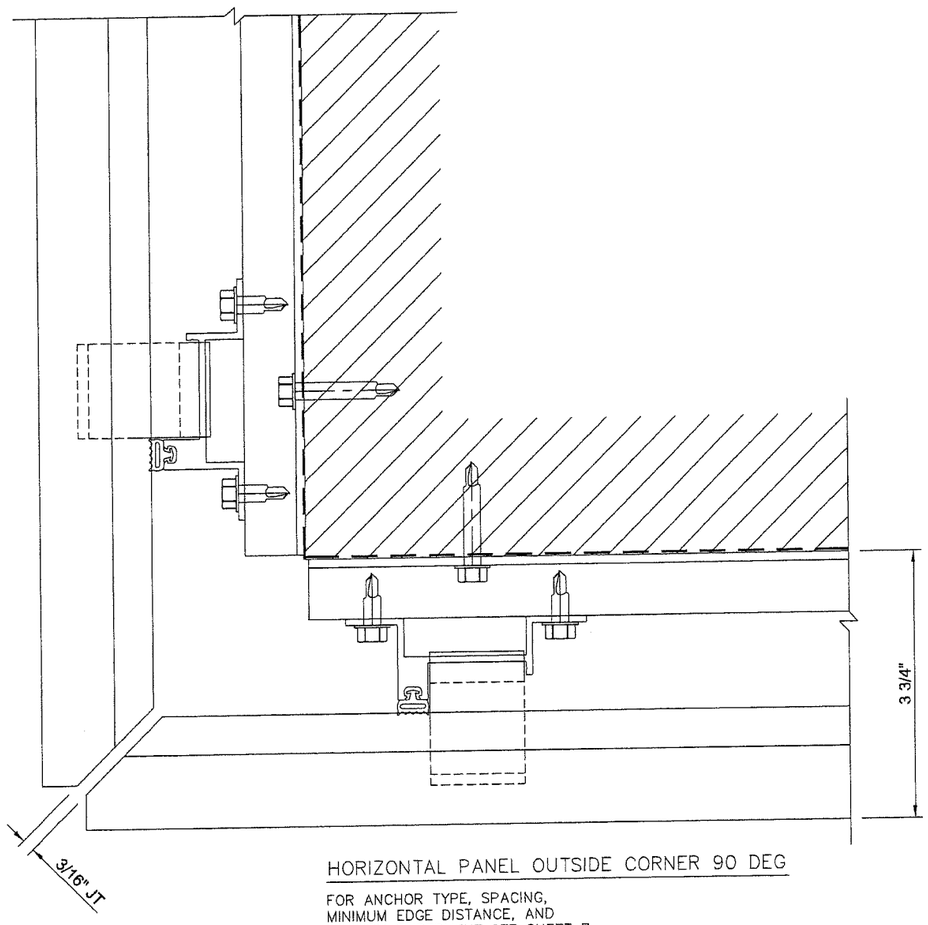

HORIZONTAL PANEL OUTSIDE CORNER 90 DEG

FOR ANCHOR TYPE, SPACING,
MINIMUM EDGE DISTANCE, AND
MINIMUM EMBEDMENT SEE SHEET 7.

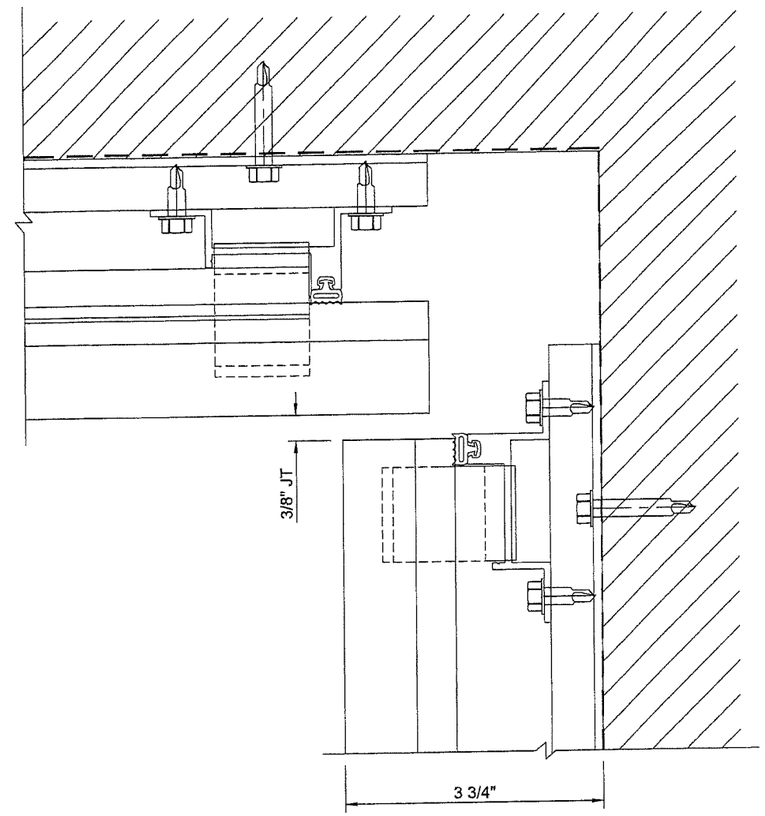

HORIZONTAL PANEL INSIDE CORNER 90 DEG

FOR ANCHOR TYPE, SPACING,
MINIMUM EDGE DISTANCE, AND
MINIMUM EMBEDMENT SEE SHEET 7.

PRODUCT REVISED
as complying with the Florida Building Code
NOA-No. 21-0106.07
Expiration Date 12/24/2025
By
Miami-Dade Product Control

PRODUCT REVISED
as complying with the Florida Building Code
NOA-No. **18-0815.01**
Expiration Date **12/24/2020**
By
Miami-Dade Product Control

Approved as complying with the Florida Building Code
Date 12/24/2015
NOA# 15-0514.04
Miami Dade Product Control
By

SIGNED: 09/21/2015

LUIS R. LOMAS
LICENSE
No. 62514
STATE OF FLORIDA
PROFESSIONAL ENGINEER

Mark	Date	Revision
△	4/21/15	NOA SUB UPDATES
△		
△		
△		
△		
△		

PRODUCT DESCRIPTION:
SYSTEM: WALL CLADDING
TERRA COTTA PANELS
HORIZONTAL and VERTICAL

Boston Valley Terra Cotta
6860 S ABBOT RD,
ORCHARD PARK, NY 14127
1-716-649-7490
www.terraclad.com

L. Roberto Lomas P.E.
233 W. Main Street
Danville, VA 0661
(434)-688-0609
www.lrlomaspe.com
FL No.# 62514

Drawn By:	WJH&A
Date Drawn:	5/30/2015
Checked By:	
D-Scale:	Full
B-Scale:	6"=1'-0"
DRAWING:	12069B.01
Title:	
Sheet NO:	8 of 10

Last Saved: Sep 23, 2015 - 11:02am

VERTICAL PANEL ORIENTATION OPTIONAL CORNER DETAILS

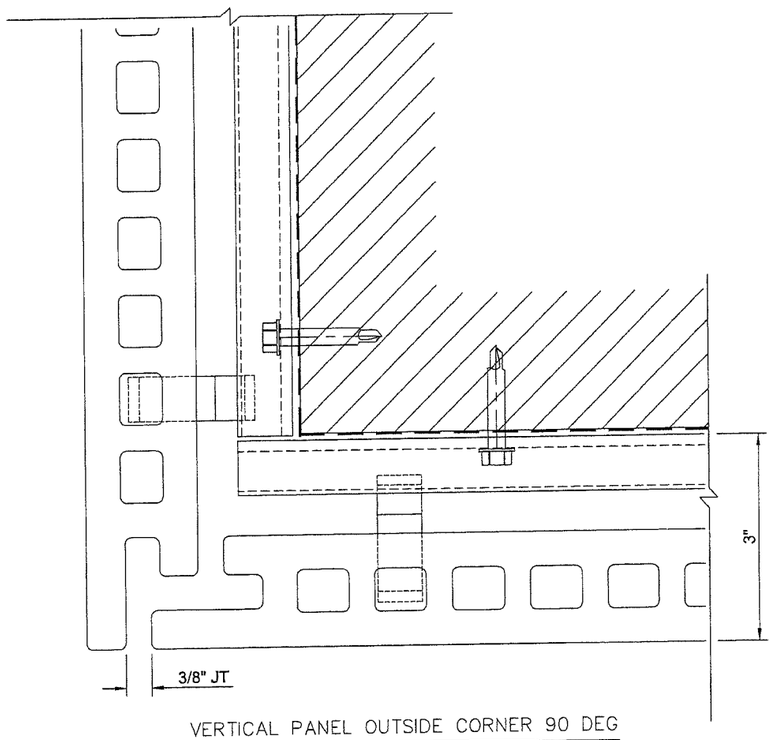

VERTICAL PANEL OUTSIDE CORNER 90 DEG

FOR ANCHOR TYPE, SPACING,
MINIMUM EDGE DISTANCE, AND
MINIMUM EMBEDMENT SEE SHEET 7.

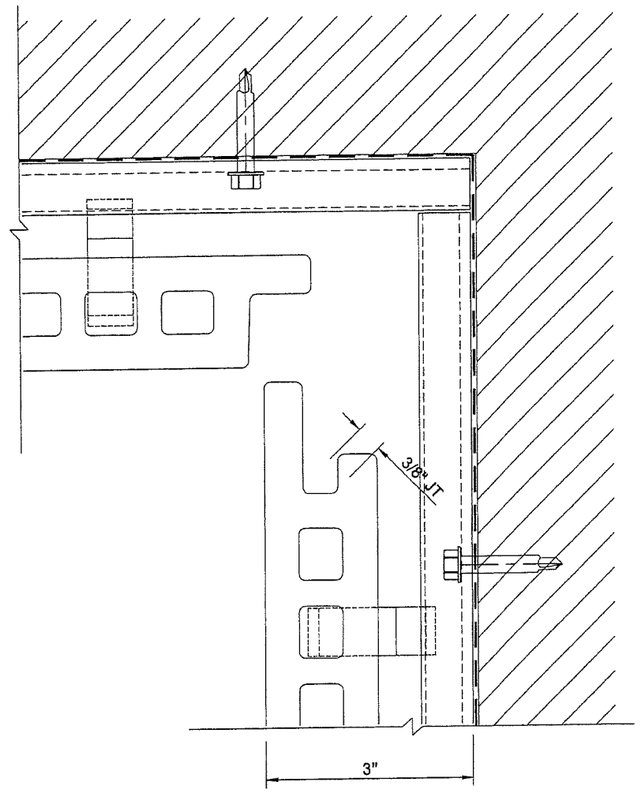

VERTICAL PANEL INSIDE CORNER 90 DEG

FOR ANCHOR TYPE, SPACING,
MINIMUM EDGE DISTANCE, AND
MINIMUM EMBEDMENT SEE SHEET 7.

PRODUCT REVISED
as complying with the Florida Building Code
NOA-No. 21-0106.07
Expiration Date 12/24/2025
By
Miami-Dade Product Control

PRODUCT REVISED
as complying with the Florida Building Code
NOA-No. **18-0815.01**
Expiration Date **12/24/2020**
By
Miami-Dade Product Control

Approved as complying with the Florida Building Code
Date 12/24/2015
NOA# 15054.04
Miami Dade Product Control
By

SIGNED: 09/21/2015

LUIS R. LOMAS
LICENSE
No. 62514
STATE OF FLORIDA
PROFESSIONAL ENGINEER

Mark	Date	Revision
△	4/21/15	NOA SUB UPDATES
△		
△		
△		
△		
△		

PRODUCT DESCRIPTION:
SYSTEM: WALL CLADDING
TERRA COTTA PANELS
HORIZONTAL and VERTICAL

Boston Valley Terra Cotta
6860 S ABBOT RD,
ORCHARD PARK, NY 14127
1-716-649-7490
www.terraclad.com

L. Roberto Lomas P.E.
233 W. Main Street
Danville, VA 0661
(434)-688-0609
www.lrlomaspe.com
FL No.# 62514

Drawn By:	WJH&A
Date Drawn:	5/30/2015
Checked By:	
D-Scale:	Full
B-Scale:	6"=1'-0"
DRAWING:	12069B.01
Title:	
Sheet NO:	9 of 10

Last Saved: Sep 23, 2015 - 11:02am

AVAILABLE PANEL DIMENSIONS

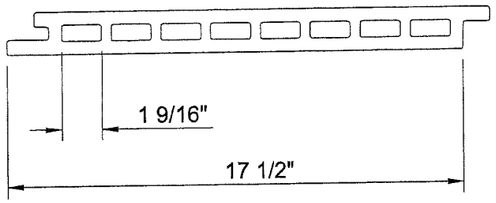

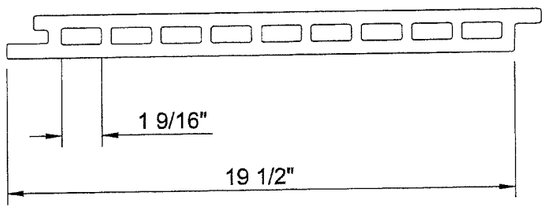

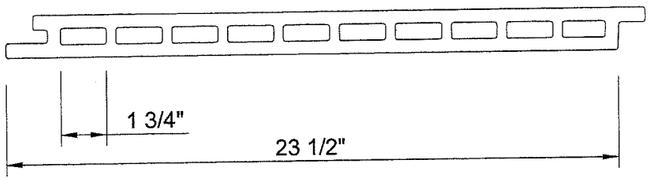

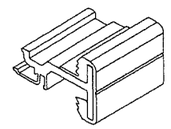

UTILIZES 1-1/2" LONG CLIPS
WHEN USED WITH VERTICAL PANEL SYSTEM

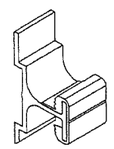

UTILIZES 1-3/8" LONG CLIPS
WHEN USED WITH HORIZONTAL PANEL SYSTEM

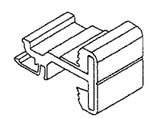

UTILIZES 1" LONG CLIPS
WHEN USED WITH VERTICAL PANEL SYSTEM

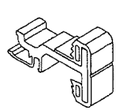

UTILIZES 5/8" LONG CLIPS
WHEN USE WITH VERTICAL PANELS SYSTEM

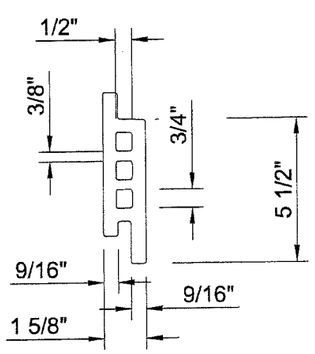

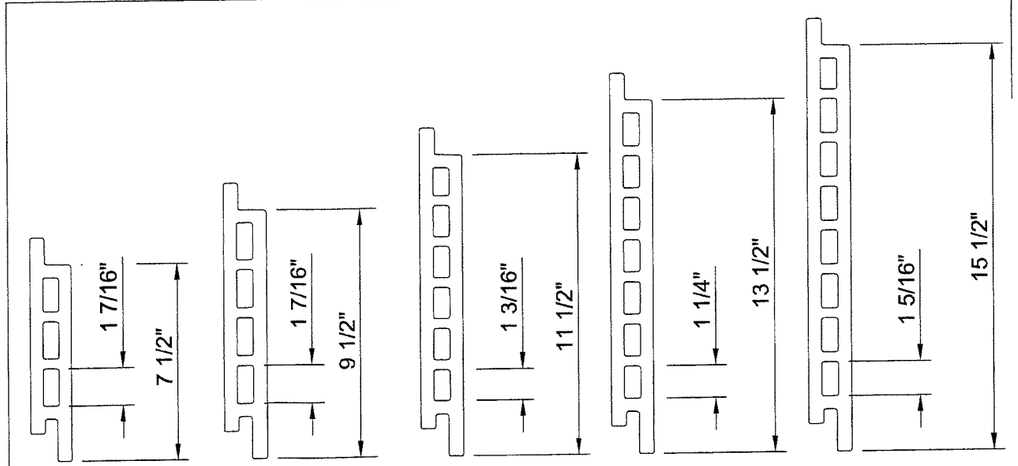

PRODUCT REVISED
as complying with the Florida Building Code
NOA–No. 21-0106.07
Expiration Date 12/24/2025
By
Miami–Dade Product Control

PRODUCT REVISED
as complying with the Florida Building Code
NOA–No. 18-0815.01
Expiration Date 12/24/2020
By
Miami–Dade Product Control

Approved as complying with the Florida Building Code
Date 12/24/2015
NOA# 15-0514.04
Miami Dade Product Control
By

SIGNED: 09/21/2015

LUIS R. LOMAS
LICENSE
No. 62514
STATE OF FLORIDA
PROFESSIONAL ENGINEER

Mark	Date	Revision
4	4/21/15	NOA SUB UPDATES
3		
2		
1		
0		
0		
0		

PRODUCT DESCRIPTION:
SYSTEM: WALL CLADDING
TERRA COTTA PANELS
HORIZONTAL and VERTICAL

Boston Valley Terra Cotta
6860 S ABBOT RD,
ORCHARD PARK, NY 14127
1-716-649-7490
www.terraclad.com

L. Roberto Lomas P.E.
233 W. Main Street
Danville, VA 0651
(434)-688-0609
FL No.# 62514
www.lrlomaspe.com

Drawn By:	WJH&A
Date Drawn:	5/30/2015
Checked By:	
D-Scale:	Full
B-Scale:	6"=1'-0"
DRAWING:	12069B.01
Title:	
Sheet NO:	10 of 10

Last Saved: Sep 23, 2015 – 11:02am