MIAMI-DADE COUNTY
PRODUCT CONTROL SECTION
11805 SW 26 Street, Room 208
Miami, Florida 33175
T (786) 315-2590 F (786) 315-2599
www.miamidade.gov/economy

DEPARTMENT OF REGULATORY AND ECONOMIC RESOURCES (RER)
BOARD AND CODE ADMINISTRATION DIVISION

NOTICE OF ACCEPTANCE (NOA)

PGT Industries, Inc.
1070 Technology Drive
North Venice, FL 34275

SCOPE:

This NOA is being issued under the applicable rules and regulations governing the use of construction materials. The documentation submitted has been reviewed and accepted by Miami-Dade County RER - Product Control Section to be used in Miami Dade County and other areas where allowed by the Authority Having Jurisdiction (AHJ).

This NOA shall not be valid after the expiration date stated below. The Miami-Dade County Product Control Section (In Miami Dade County) and/or the AHJ (in areas other than Miami Dade County) reserve the right to have this product or material tested for quality assurance purposes. If this product or material fails to perform in the accepted manner, the manufacturer will incur the expense of such testing and the AHJ may immediately revoke, modify, or suspend the use of such product or material within their jurisdiction. RER reserves the right to revoke this acceptance, if it is determined by Miami-Dade County Product Control Section that this product or material fails to meet the requirements of the applicable building code.

This product is approved as described herein and has been designed to comply with the Florida Building Code, including the High Velocity Hurricane Zone.

DESCRIPTION: Series "HR-5410" PVC Horizontal Rolling Window – N.I.

APPROVAL DOCUMENT: Drawing No. **MD-HR5410-01 Rev D** titled "Horizontal Roller - NI", sheets 1 through 15 of 15, dated 05/15/15 and last revised on 06/16/23, prepared by manufacturer, signed and sealed by Anthony Lynn Miller, P.E., bearing the Miami-Dade County Product Control Revision stamp with the Notice of Acceptance number and expiration date by the Miami-Dade County Product Control Section.

MISSILE IMPACT RATING: None. Approved Hurricane Protection Devices complying FBC, HVHZ required.

LABELING: Each unit shall bear a permanent label with the manufacturer's name or logo, city, state, model/series, and following statement: "Miami-Dade County Product Control Approved", unless otherwise noted herein.

RENEWAL of this NOA shall be considered after a renewal application has been filed and there has been no change in the applicable building code negatively affecting the performance of this product.

TERMINATION of this NOA will occur after the expiration date or if there has been a revision or change in the materials, use, and/or manufacture of the product or process. Misuse of this NOA as an endorsement of any product, for sales, advertising or any other purposes shall automatically terminate this NOA. Failure to comply with any section of this NOA shall be cause for termination and removal of NOA.

ADVERTISEMENT: The NOA number preceded by the words Miami-Dade County, Florida, and followed by the expiration date may be displayed in advertising literature. If any portion of the NOA is displayed, then it shall be done in its entirety.

INSPECTION: A copy of this entire NOA shall be provided to the user by the manufacturer or its distributors and shall be available for inspection at the job site at the request of the Building Official.

This NOA **revises NOA# 20-0406.02** and consists of this page 1 and evidence pages E-1, E-2, E-3 and E-4, as well as approval document mentioned above.

The submitted documentation was reviewed by **Ishaq I. Chanda, P.E.**

MIAMI-DADE COUNTY APPROVED

Ishaq I. Chanda

PGT Industries, Inc.

NOTICE OF ACCEPTANCE: EVIDENCE SUBMITTED

1. EVIDENCE SUBMITTED UNDER PREVIOUS NOA's

A. DRAWINGS

1. Manufacturer's die drawings and sections. ***(Submitted under NOA No.15-0903.11)***

2. Drawing No. **MD-HR5410-01** titled "Horizontal Roller - NI", sheets 1 through 15 of 15, dated 05/15/15, with revision B dated 03/27/17, prepared by manufacturer, signed and sealed by Anthony Lynn Miller, P.E.

B. TESTS

1. Test reports on: 1) Uniform Static Air Pressure Test, Loading per FBC, TAS 202-94
2) Large Missile Impact Test per FBC, TAS 201-94
3) Cyclic Wind Pressure Loading per FBC, TAS 203-94
along with marked-up drawings and installation diagram of a PVC sliding glass door, a PVC fixed window and an aluminum sliding glass door, using: Kodispace 4SG TPS spacer system, Duraseal® spacer system, Super Spacer® NXT™ spacer system and XL Edge™ spacer system at insulated glass, prepared by Fenestration Testing Laboratory, Inc., Test Reports No. **FTL-8717, FTL-8968** and **FTL-8970**, dated 11/16/15, 06/07/16 and 06/02/16 respectively, all signed and sealed by Idalmis Ortega, P.E.
(Submitted under previous NOA No. 16-0714.18)

2. Test reports on: 1) Air Infiltration Test, per FBC, TAS 202-94
2) Uniform Static Air Pressure Test, Loading per FBC TAS 202-94
3) Water Resistance Test, per FBC, TAS 202-94
4) Forced Entry Test, per FBC 2411.3.2.1, and TAS 202-94
5) Large Missile Impact Test per FBC, TAS 201-94
6) Cyclic Wind Pressure Loading per FBC, TAS 203-94
along with marked-up drawings and installation diagram of series 5410 and series 5510 PVC horizontal sliding windows, prepared by Fenestration Testing Laboratory, Inc., Test Report No. **FTL-8072**, dated 02/03/15, signed and sealed by Idalmis Ortega, P.E. ***(Submitted under NOA No. 15-0903.11)***

C. CALCULATIONS

1. Anchor verification calculations and structural analysis, complying with **FBC-5th Edition (2014)** dated 08/28/15, prepared by manufacturer, signed and sealed by Anthony Lynn Miller, P.E. ***(Submitted under NOA No. 15-0903.11)***

2. Glazing complies with **ASTM E1300-09**

D. QUALITY ASSURANCE

1. Miami-Dade Department of Regulatory and Economic Resources (RER).

E. MATERIAL CERTIFICATIONS

1. NOA No. **16-0712.03** issued to ENERGI Fenestration Solutions USA, for their "**White Rigid PVC Exterior Extrusions for Windows and Doors**" dated 08/10/17, expiring on 02/28/18.

Ishaq I. Chanda

Ishaq I. Chanda, P.E.
Product Control Unit Supervisor
NOA No. 23-0707.09
Expiration Date: September 24, 2025
Approval Date: July 27, 2023

E. MATERIAL CERTIFICATIONS (CONTINUED)

2. NOA No. **16-0712.04** issued to ENERGI Fenestration Solutions USA, Inc. for their "**Bronze and Lighter Shades of Cap Coated Rigid PVC Exterior Extrusions for Windows and Doors**" dated 09/15/16, expiring on 04/16/20.

3. NOA No. **16-0712.05** issued to ENERGI Fenestration Solutions USA, Inc. for their "**Performance Core Rigid PVC Exterior Extrusions for Windows and Doors**" dated 09/1516, expiring on 04/16/20.

F. STATEMENTS

1. Statement letter of conformance, complying with **FBC-5th Edition (2014) and FBC-6th Edition (2017)**, dated 08/02/17, issued by manufacturer, signed and sealed by Anthony Lynn Miller, P.E.

2. Statement letter of no financial interest, dated 03/31/17, issued by manufacturer, signed and sealed by Anthony Lynn Miller, P.E.

3. Proposal No. **16-0125** issued by the Product Control Section, dated 03/09/16, signed by Ishaq Chanda, P.E. ***(Submitted under previous NOA No. 16-0714.18)***

4. Proposal issued by Product Control, dated 8/27/14 and revised on 9/10/14, signed by Jaime Gascon, P.E. Supervisor, Product Control Section. ***(Submitted under NOA No.15-0903.11)***

G. OTHERS

1. NOA No. **16-0714.18**, issued to PGT Industries, Inc. for their Series "HR-5410" PVC Horizontal Rolling Window - N.I., approved on 09/01/16 and expiring on 09/24/20.

2. NEW EVIDENCE SUBMITTED UNDER PREVIOUS NOA's

A. DRAWINGS

1. Drawing No. **MD-HR5410-01** titled "Horizontal Roller - NI", sheets 1 through 15 of 15, dated 05/15/15, with revision C dated 04/02/2020, prepared by manufacturer, signed and sealed by Anthony Lynn Miller, P.E.

B. TESTS

1. Test reports on: 1) Air Infiltration Test, per FBC, TAS 202-94
2) Uniform Static Air Pressure Test, Loading per FBC, TAS 202-94
3) Water Resistance Test, per FBC, TAS 202-94
4) Large Missile Impact Test per FBC, TAS 201-94
5) Cyclic Wind Pressure Loading per FBC, TAS 203-94
6) Forced Entry Test, per ASTM F588 and TAS 202-94

along with marked-up drawings and installation diagram of all PGT Industries, Inc. representative units listed below and tested to qualify **Dowsil 791** and **Dowsil 983** silicones, prepared by Fenestration Testing Laboratory, Inc., Test Reports No.:

Ishaq I. Chanda

Ishaq I. Chanda, P.E.
Product Control Unit Supervisor
NOA No. 23-0707.09
Expiration Date: September 24, 2025
Approval Date: July 27, 2023

NOTICE OF ACCEPTANCE: EVIDENCE SUBMITTED

B. TESTS (CONTINUED)

FTL-7897, PGT PW5520 PVC Fixed Window (unit 6 in proposal),
FTL-20-2107.1, PGT SGD780 Aluminum Sliding Glass Door (unit 7 in proposal)
FTL-20-2107.2, PGT CA740 Alum. Outswing Casement Window (unit 8 in proposal)
FTL-20-2107.3, PGT PW7620A Aluminum Fixed Window (unit 9 in proposal) and
FTL-20-2107.4, PGT PW7620A Aluminum Fixed Window (unit 10 in proposal)
dated 07/13/20, all signed and sealed by Idalmis Ortega, P.E

C. CALCULATIONS

1. Anchor verification calculations and structural analysis, complying with **FBC-6th Edition (2017)** and **FBC-7th (2020)** dated 04/02/2020, prepared by manufacturer, signed and sealed by Anthony Lynn Miller, P.E.

2. Glazing complies with **ASTM E1300-09**

D. QUALITY ASSURANCE

1. Miami-Dade Department of Regulatory and Economic Resources (RER).

E. MATERIAL CERTIFICATIONS

1. NOA No. **18-0122.02** issued to ENERGI Fenestration Solutions USA, for their "**White Rigid PVC Exterior Extrusions for Windows and Doors**" dated 03/08/18, expiring on 02/28/23.

2. NOA No. **20-0203.03** issued to ENERGI Fenestration Solutions USA, Inc. for their "**Bronze and Lighter Shades of Cap Coated Rigid PVC Exterior Extrusions for Windows and Doors**" dated 02/27/20, expiring on 04/16/25.

3. NOA No. **20-0203.04** issued to ENERGI Fenestration Solutions USA, Inc. for their "**Performance Core Rigid PVC Exterior Extrusions for Windows and Doors**" dated 02/27/20, expiring on 04/16/25.

F. STATEMENTS

1. Statement letter of conformance, complying with **FBC-6th Edition (2017) and FBC-7th Edition (2020)**, dated 03/27/20, issued by manufacturer, signed and sealed by Anthony Lynn Miller, P.E.

2. Statement letter of no financial interest, dated 03/27/20, issued by manufacturer, signed and sealed by Anthony Lynn Miller, P.E.

3. Proposal No. **19-1155 TP** issued by the Product Control Section, dated January 10, 2020, signed by Ishaq Chanda, P.E.

G. OTHERS

1. NOA No. **17-0411.09**, issued to PGT Industries, Inc. for their Series "HR-5410" PVC Horizontal Rolling Window - N.I., approved on 08/31/17 and expiring on 09/24/20.

Ishaq I. Chanda

Ishaq I. Chanda, P.E.
Product Control Unit Supervisor
NOA No. 23-0707.09
Expiration Date: September 24, 2025
Approval Date: July 27, 2023

NOTICE OF ACCEPTANCE: EVIDENCE SUBMITTED

3. NEW EVIDENCE SUBMITTED UNDER PREVIOUS NOA's

A. DRAWINGS

1. Drawing No. **MD-HR5410-01 Rev D** titled "Horizontal Roller - NI", sheets 1 through 15 of 15, dated 05/15/15 and last revised on 06/16/23, prepared by manufacturer, signed and sealed by Anthony Lynn Miller, P.E.

B. TESTS (submitted under previous approval**)**

1. None.

C. CALCULATIONS (submitted under previous approval)

1. None

D. QUALITY ASSURANCE

1. Miami-Dade Department of Regulatory and Economic Resources (RER).

E. MATERIAL CERTIFICATIONS

1. NOA No. **21-1109.04** issued to Vision Extrusions Group Limited, for their "**White Rigid PVC Exterior Extrusions for Windows and Doors**", expiring on 09/30/24.

2. NOA No. **22-0104.04** issued to Vision Extrusions Group limited for their "**Bronze and Lighter Shades of Cap Coated Rigid PVC Exterior Extrusions for Windows and Doors**", expiring on 04/16/25.

3. NOA No. **20-0203.04** issued to ENERGI Fenestration Solutions USA, Inc. for their "**Performance Core Rigid PVC Exterior Extrusions for Windows and Doors**" dated 02/27/20, expiring on 04/16/25.

F. STATEMENTS

1. Statement letter of conformance, complying with **FBC 7th Edition (2020)** and the **FBC 8th Edition (2023)**, dated 06-16-23, issued by manufacturer, signed and sealed by Anthony Lynn Miller, P.E.

2. Statement letter of conformance, complying with **FBC-6th Edition (2017) and FBC-7th Edition (2020)**, dated 03/27/20, issued by manufacturer, signed and sealed by Anthony Lynn Miller, P.E. **(**submitted under previous approval**)**

G. OTHERS

1. This NOA **revises NOA# 20-0406.02**, expiring on 09/24/25.

Ishaq I. Chanda

Ishaq I. Chanda, P.E.
Product Control Unit Supervisor
NOA No. 23-0707.09
Expiration Date: September 24, 2025
Approval Date: July 27, 2023

DESIGN PRESSURE RATING	IMPACT RATING
VARIES PER REINFORCEMENT LEVEL, SEE SHEETS 6-8	NOT RATED FOR IMPACT RESISTANCE

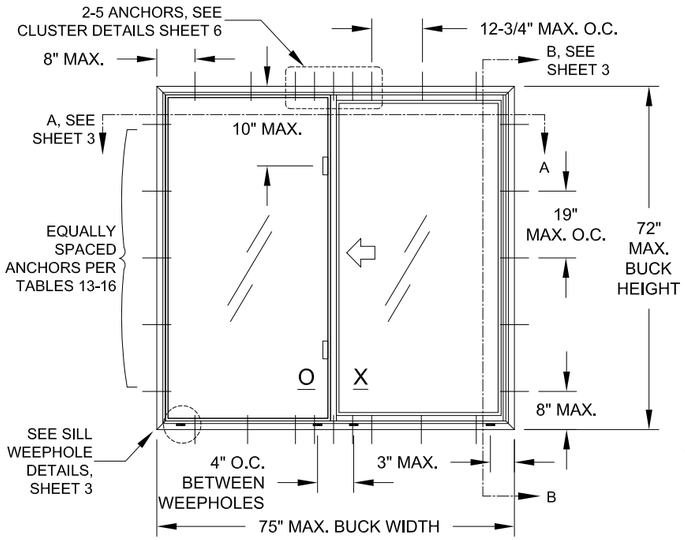

ELEVATION FOR TYP. EQUAL LEG FRAME SHOWN AS OX CONFIGURATION

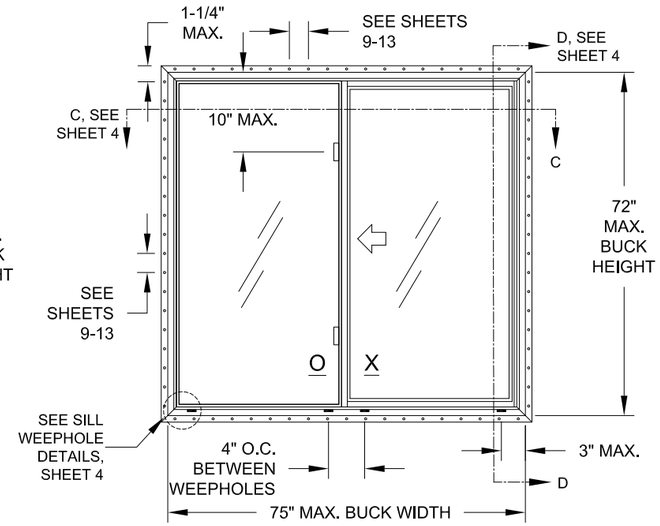

ELEVATION FOR TYP. FIN OR J-CHANNEL FRAME SHOWN AS OX CONFIGURATION ANCHORED THROUGH THE NAIL-FIN

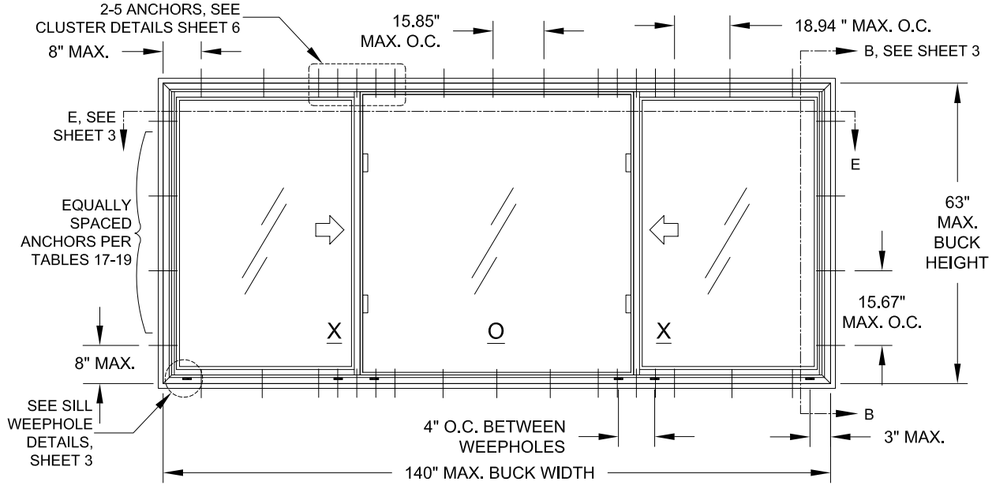

ELEVATION FOR TYP. FLANGE FRAME SHOWN AS XOX CONFIGURATION

CODES / STANDARDS USED:

- 2023 FLORIDA BUILDING CODE (FBC), 8TH EDITION
- 2020 FLORIDA BUILDING CODE (FBC), 7TH EDITION
- ASTM E1300-09
- ANSI/AF&PA NDS-2018 FOR WOOD CONSTRUCTION
- ALUMINUM DESIGN MANUAL, ADM-2020
- AISI S100-16
- AISC 360-16

GENERAL NOTES: SERIES 5410 NON-IMPACT RESISTANT HORIZONTAL ROLLER

1) THIS PRODUCT HAS BEEN DESIGNED & TESTED TO COMPLY WITH THE REQUIREMENTS OF THE FLORIDA BUILDING CODE, INCLUDING THE HIGH VELOCITY HURRICANE ZONE (HVHZ).
2) SHUTTERS ARE REQUIRED WHEN USED IN WIND-BORNE DEBRIS REGIONS.
3) FOR MASONRY APPLICATIONS IN MIAMI-DADE COUNTY, USE ONLY MIAMI-DADE COUNTY APPROVED MASONRY ANCHORS. MATERIALS USED FOR ANCHOR EVALUATIONS WERE SOUTHERN PINE, ASTM C90 CONCRETE MASONRY UNITS AND CONCRETE WITH MIN. KSI PER ANCHOR TYPE.
4) ALL WOOD BUCKS LESS THAN 1-1/2" THICK ARE TO BE CONSIDERED 1X INSTALLATIONS. 1X WOOD BUCKS ARE OPTIONAL IF UNIT IS INSTALLED DIRECTLY TO SUBSTRATE. WOOD BUCKS DEPICTED AS 2X ARE 1-1/2" THICK OR GREATER. 1X AND 2X BUCKS (WHEN USED) SHALL BE DESIGNED AND SECURED TO PROPERLY TRANSFER LOADS TO THE STRUCTURE. WOOD BUCK DESIGN AND INSTALLATION IS THE RESPONSIBILITY OF THE ENGINEER, (EOR) OR ARCHITECT OF RECORD, (AOR).
5) ANCHOR EMBEDMENT TO BASE MATERIAL SHALL BE BEYOND WALL DRESSING OR STUCCO. USE ANCHORS OF SUFFICIENT LENGTH TO ACHIEVE REQUIRED MIN. EMBEDMENT. INSTALLATION ANCHORS SHOULD BE SEALED. OVERALL SEALING/FLASHING STRATEGY FOR WATER RESISTANCE OF INSTALLATION SHALL BE DONE BY OTHERS AND IS BEYOND THE SCOPE OF THESE INSTRUCTIONS.
6) 1/4" MAX. SHIMS ARE REQUIRED AT EACH ANCHOR LOCATION WHERE THE PRODUCT IS NOT FLUSH TO THE SUBSTRATE. USE SHIMS CAPABLE OF TRANSFERRING APPLIED LOADS.
7) DESIGN PRESSURES:
   A. NEGATIVE DESIGN LOADS BASED ON STRUCTURAL TESTING AND GLASS PER ASTM E1300.
   B. POSITIVE DESIGN LOADS BASED ON WATER TEST PRESSURE, STRUCTURAL TESTING AND GLASS PER ASTM E1300.
   C. DESIGN LOADS ARE BASED ON ALLOWABLE STRESS DESIGN, ASD.
8) THE ANCHORAGE METHODS SHOWN HAVE BEEN DESIGNED TO RESIST THE WINDLOADS CORRESPONDING TO THE REQUIRED DESIGN PRESSURE. THE 33-1/3% STRESS INCREASE HAS NOT BEEN USED IN THE DESIGN OF THIS PRODUCT. THE 1.6 LOAD DURATION FACTOR WAS USED FOR THE EVALUATION OF ANCHORS INTO WOOD. ANCHORS THAT COME INTO CONTACT WITH OTHER DISSIMILAR MATERIALS SHALL MEET THE REQUIREMENTS OF THE FLORIDA BUILDING CODE FOR CORROSION RESISTANCE.
9) METAL SUBSTRATE TO MEET MIN. STRENGTH AND THICKNESS REQUIREMENTS PER CURRENT FLORIDA BUILDING CODE AND TO BE REVIEWED BY THE AUTHORITY HAVING JURISDICTION.
10) REFERENCES: TEST REPORTS FTL-8072; ELCO ULTRACON NOA; DEWALT ULTRACON+ NOA; ELCO/DEWALT CRETEFLEX NOA; ELCO/DEWALT AGGRE-GATOR NOA; VISION EXTRUSION, LTD WHITE & BRONZE/LIGHTER SHADES OF CAP COATED PVC EXTRUSION NOA'S; NATIONAL DESIGN SPECIFICATION FOR WOOD CONSTRUCTION, ANSI/AF&PA NDS & ALUMINUM DESIGN MANUAL
11) APPLICABLE EGRESS REQUIREMENTS TO BE REVIEWED BY BUILDING OFFICIAL.
12) FRAME FLANGES OR INTEGRAL FINS MAY BE TRIMMED IN-FIELD TO CREATE AN EQUAL-LEG FRAME.

GENERAL NOTES..... 1
ELEVATIONS..... 1
FRAME, GLASS & ANCHOR OPTIONS..... 2
INSTALLATION, FLANGE & EQUAL LEG/BOX..... 3
INSTALLATION, INTEGRAL FIN & J-CHANNEL..... 4
GLAZING DETAILS..... 5
DESIGN PRESSURES..... 6-8
ANCHOR QUANTITIES..... 9-13
EXTRUSION PROFILES & BOM....14
ASSEMBLY.....15

USER INSTRUCTIONS:

1) DETERMINE THE SITE SPECIFIC, WINDOW OPENING'S DESIGN PRESSURE REQUIREMENT USING WINDLOAD STANDARD ASCE 7.
2) KNOWING YOUR FRAME TYPE, WINDOW CONFIGURATION (OX, XO, XOX), SIZE, GLAZING OPTION FROM (TABLE 1) AND REINFORCEMENT LEVEL, DETERMINE YOUR WINDOW'S DESIGN PRESSURE REQUIREMENT FOR THE WINDOW OPENING USING TABLES 6-12 (SHEETS 6-8). IT MUST EQUAL OR EXCEED THE DESIGN PRESSURE REQUIREMENT FOR THE WINDOW OPENING OBTAINED IN STEP 1. USE INDEX TABLE 5 ON SHEET 6 TO HELP FIND THE APPROPRIATE TABLE.
3) DETERMINE THE MOST SUITABLE ANCHOR GROUP FROM TABLES 2 AND 3 ON SHEET 2 ACCORDING TO THE INSTALLATION CONDITIONS.
4) DETERMINE THE ANCHOR QUANTITY FROM TABLES 13-19 (SHEETS 9-13), VERIFY THE ANCHOR/SUBSTRATE WILL MEET REQUIREMENTS FOR YOUR OPENING'S CONDITION FROM TABLES 2 OR 3, AND THAT ALL MIN. REQUIREMENTS FROM THIS SHEET-SET ARE MET.
5)INSTALL AS PER SHEET 3 FOR FLANGE/EQUAL LEG INSTALLATION OR SHEET 4 FOR INTEGRAL FIN/J-CHANNEL INSTALLATION. USE TABLE 4 ON SHEET 2 TO FIND THE APPROPRIATE DETAILS.

NOTE: DESIGN PRESSURE RATING DETERMINATION IS THE SAME PROCESS FOR ALL FRAME TYPES (J-CHANNEL, FLANGE, INTEGRAL FIN OR EQUAL LEG/BOX), SEE FIGURE B ON SHEET 2.

PRODUCT REVISED
as complying with the Florida Building Code
NOA–No. 23-0707.09
Expiration Date 09/24/2025
By Ishaq I. Chanda
Miami–Dade Product Control

PGT Custom Windows and Doors
1070 TECHNOLOGY DRIVE
N. VENICE, FL 34275
(941) 480-1600

PREPARED BY A. LYNN MILLER
1070 TECHNOLOGY DRIVE
N. VENICE, FL 34275
(941) 480-1600
REGISTRATION #29296

Title	VINYL SLIDING GLASS WINDOW (NI)	Date	05/15/15
Desc.	GENERAL NOTES & ELEVATION	Drawn By	JENS ROSOWSKI
Rev	UPDATED TO 2023 BUILDING CODE - LY	Rev Date	06/15/23

Series	HR5410	Sheet	1 OF 15	DWG No.	HR5410-NOA	Rev.	D

ANTHONY LYNN MILLER
LICENSE
No. 58705
A. Lynn Miller
06/16/23
STATE OF FLORIDA
PROFESSIONAL ENGINEER

A. LYNN MILLER, P.E.
P.E.# 58705

TABLE 1: ALLOWABLE GLASS TYPES

Glass Type	Description (Listed from Exterior to Interior)
1	3/4" I.G.: 1/8" A Exterior Cap + 1/2" Air Space + 1/8" A Exterior Cap
2	3/4" I.G.: 1/8" T Exterior Cap + 1/2" Air Space + 1/8" T Exterior Cap
3	3/4" I.G.: 3/16" A Exterior Cap + 3/8" Air Space + 3/16" A Exterior Cap
4	3/4" I.G.: 3/16" T Exterior Cap + 3/8" Air Space + 3/16" T Exterior Cap

SEE SHEET 6, TABLE 5 FOR GLAZING/DESIGN PRESSURE/ANCHORAGE INDEX.

GLASS TYPES 1 & 3 MAY NOT BE USED IN THE HVHZ ABOVE 30'.

Material	Min. F_y	Min. F_u
Steel Screw	92 ksi	120 ksi
18-8 Screw	60 ksi	95 ksi
410 Screw	90 ksi	110 ksi
Elco/DeWalt Aggre-Gator®	57 ksi	96 ksi
3/16" DeWalt UltraCon+®	117 ksi	164 ksi
1/4" DeWalt UltraCon+®	148 ksi	164 ksi
410 SS Elco/Dewalt CreteFlex®	127.4 ksi	189.7 ksi
6063-T5 Aluminum	16 ksi	22 ksi
A36 Steel	36 ksi	58 ksi
Gr. 33 Steel Stud	33 ksi	45 ksi

TABLE 2: ALLOWABLE ANCHORS THROUGH THE FRAME

Group	Anchor	Substrate	Min. Edge Distance	Min. Embedment*
A	#10 SMS (steel, 18-8 S.S. or 410 S.S.)	P.T. Southern Pine (SG=0.55)	7/16"	1-3/8"
		Steel, A36*	3/8"	0.050"
		Steel Stud, A653 Gr. 33*	3/8"	0.0451" (18 Ga.)
		Aluminum, 6063-T5*	3/8"	0.050"
	3/16" steel Ultracon+	P.T. Southern Pine (SG=0.55)	7/16"	1-3/8"
		Concrete (min. 3 ksi)	1"	1-3/8"
		Ungrouted CMU, (ASTM C-90)	1"	1-1/4"
B	#12 SMS (steel, 18-8 S.S. or 410 S.S.)	P.T. Southern Pine (SG=0.55)	9/16"	1-3/8"
		Steel, A36*	3/8"	0.050"
		Steel Stud, A653 Gr. 33*	3/8"	0.0451" (18 Ga.)
		Aluminum, 6063-T5*	3/8"	0.063"
	1/4" steel Ultracon+	P.T. Southern Pine (SG=0.55)	1"	1-3/8"
	1/4" steel Creteflex	P.T. Southern Pine (SG=0.55)	1"	1-3/8"
	1/4" steel Aggre-Gator	P.T. Southern Pine (SG=0.55)	1"	1-3/8"
C	1/4" steel Ultracon+	Concrete (min. 3 ksi)	1-3/16"	1-3/4"
		Ungrouted CMU, (ASTM C-90)	1"	1-1/4"
	1/4" steel Creteflex	Concrete (min. 3.35 ksi)	1"	1-3/4"
D	1/4" steel Ultracon+	Concrete (min. 3 ksi)	2-1/2"	1-3/4"
		Ungrouted CMU, (ASTM C-90)	2-1/2"	1-1/4"
	1/4" steel Creteflex	Concrete (min. 3.35 ksi)	2-1/2"	1-3/4"
		Ungrouted CMU, (ASTM C-90)	2-1/2"	1-1/4"
	1/4" steel Aggre-Gator	Concrete (min. 3.275 ksi)	1-1/2"	1-3/8"
		Grouted CMU, (ASTM C-90)	2"	2"

* MIN. OF 3 THREADS BEYOND THE METAL SUBSTRATE.

"UNGROUTED CMU" VALUES MAY BE USED FOR GROUTED CMU APPLICATIONS.

TABLE 3: ALLOWABLE ANCHORS THROUGH THE INTEGRAL FIN

Group	Anchor	Substrate	Min. Edge Distance	Min. Embedment*
E	2-1/2" x .131" Common Nail	P.T. Southern Pine (SG=0.55)	3/8"	2-7/16"
F	2-1/2" Ring-shank Roofing Nail	P.T. Southern Pine (SG=0.55)	3/8"	2-7/16"
	#10 Trusshead SMS (steel, 18-8 S.S. or 410 S.S.)	P.T. Southern Pine (SG=0.55)	1/2"	1-3/8"
		Aluminum, 6063-T5*	3/8"	0.050"
		Steel Stud, Gr. 33*	3/8"	0.0451" (18 Ga.)
		Steel, A36*	3/8"	0.050"
	#12 SMS (steel, 18-8 S.S. or 410 S.S.)	P.T. Southern Pine (SG=0.55)	9/16"	1-3/8"
		Aluminum, 6063-T5*	3/8"	0.063"
		Steel Stud, Gr. 33*	3/8"	0.050"
		Steel, A36*	3/8"	0.050"

* MIN. OF 3 THREADS BEYOND THE METAL SUBSTRATE.

INSTALLATION NOTES, SEE SHEETS 3 & 4 FOR ILLUSTRATIONS:

1) USE ONLY SUBSTRATE-APPROPRIATE ANCHORS LISTED ON TABLES 2 & 3, THIS SHEET. FOLLOW EMBEDMENT AND EDGE DISTANCE LIMITS. ANY INSTALLATION OPTION SHOWN MAY BE USED ON ANY SIDE OF THE WINDOW.

2) MASONRY ANCHORS MAY BE USED INTO WOOD AS PER TABLE 2, THIS SHEET. ALL WOOD BUCKS LESS THAN 1-1/2" THICK ARE TO BE CONSIDERED 1X INSTALLATIONS. 1X WOOD BUCKS ARE OPTIONAL IF UNIT IS INSTALLED DIRECTLY TO SUBSTRATE. WOOD BUCKS DEPICTED AS 2X ARE 1-1/2" THICK OR GREATER. 1X AND 2X BUCKS (WHEN USED) SHALL BE DESIGNED TO PROPERLY TRANSFER LOADS TO THE STRUCTURE. WOOD BUCK DESIGN AND INSTALLATION IS THE RESPONSIBILITY OF THE ENGINEER OR ARCHITECT OF RECORD.

3) VISIBLE LIGHT WIDTH OR HEIGHT (ALSO REFERRED TO AS DAYLIGHT OPENING) IS MEASURED FROM BEADING TO BEADING.

4) SEE SHEET 15 FOR OPTIONAL EGRESS LOCK DETAILS.

5) ALL ANCHOR HEAD TYPES ARE ACCEPTABLE.

TABLE 4: INDEX OF INSTALLATION METHODS PER FRAME TYPE

Frame Types (see Fig B)	Glass Options (see Table 1)	Installation Conditions	Substrate Option Detail Sheet
J-Channel (#1)	1 - 4	Through the integral fin……	….into 2X Wood Frame/Buckstrip - sheet 4, option 5
			….into Metal - sheet 4, option 8
		Through the frame of the window……	….into 2X Wood Frame/Buckstrip - sheet 4, option 6
			….into Metal - sheet 4, option 7
Flange (#2)	1 - 4	Through the frame of the window……	….into 2X Wood Frame/Buckstrip - sheet 3, option 1
			….into Concrete/CMU - sheet 3, option 2
			….through 1X Buckstrip into Concrete/CMU - sheet 3, option 3
			….into Metal - sheet 3, option 4
Integral Fin (#3)	1 - 4	Through the integral fin……	….into 2X Wood Frame/Buckstrip - sheet 4, option 5
			….into Metal - sheet 4, option 8
		Through the frame of the window……	….into 2X Wood Frame/Buckstrip - sheet 4, option 6
			….into Metal - sheet 4, option 7
Box / Equal-Leg (#4)	1 - 4	Through the frame of the window……	….into 2X Wood Frame/Buckstrip - sheet 3, option 1
			….into Concrete/CMU - sheet 3, option 2
			….through 1X Buckstrip into Concrete/CMU - sheet 3, option 3
			….into Metal - sheet 3, option 4

FIGURE B: FRAME TYPES

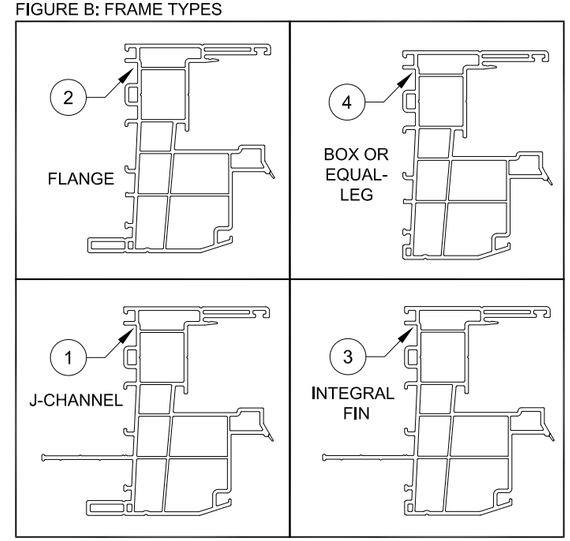

PRODUCT REVISED
as complying with the Florida Building Code
NOA–No. 23-0707.09
Expiration Date 09/24/2025
By Ishaq I. Chanda
Miami–Dade Product Control

PGT
Custom Windows and Doors
1070 TECHNOLOGY DRIVE
N. VENICE, FL 34275
(941) 480-1600

PREPARED BY A. LYNN MILLER
1070 TECHNOLOGY DRIVE
N. VENICE, FL 34275
(941) 480-1600
REGISTRATION #29296

Title	VINYL SLIDING GLASS WINDOW (NI)	Date	05/15/15
Desc.	GLASS/ANCHORS/FRAMES	Drawn By	JENS ROSOWSKI
Rev	REMOVED ULTRACONS, HEAD TYPE NOTE	Rev Date	06/15/23
Series	HR5410	Sheet	2 OF 15
DWG No.	HR5410-NOA	Rev.	D

ANTHONY LYNN MILLER
LICENSE
No. 58705
A. Lynn Miller
06/16/23
STATE OF FLORIDA
PROFESSIONAL ENGINEER

A. LYNN MILLER, P.E.
P.E.# 58705

INSTALLATION DETAILS FOR FLANGE AND EQUAL-LEG FRAMES

INSTALLATION OPTION 1

ANCHORED THROUGH FRAME INTO 2X WOOD FRAME OR BUCKSTRIP. SEE NOTE 2, SHEET 2.

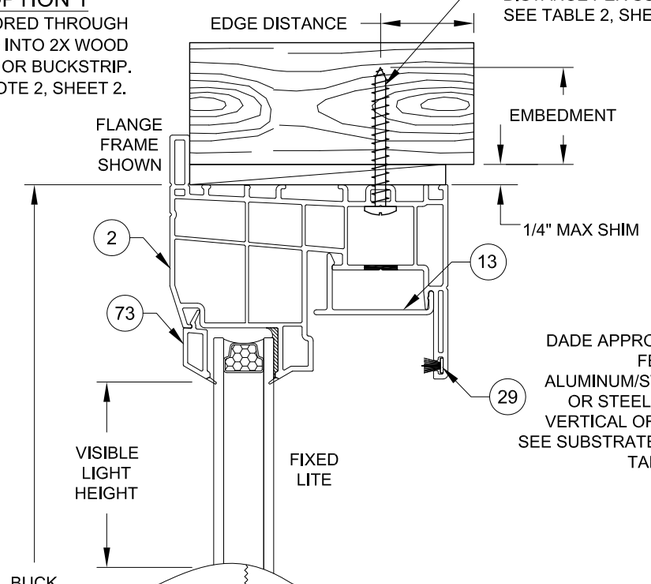

INSTALLATION OPTION 4

ANCHORED THROUGH FRAME INTO METAL

SEE INSTALLATION NOTES SHEET 2

INSTALLATION OPTION 3

ANCHORED THROUGH FRAME AND 1X BUCKSTRIP INTO CONCRETE/CMU. SEE NOTE 2, SHEET 2.

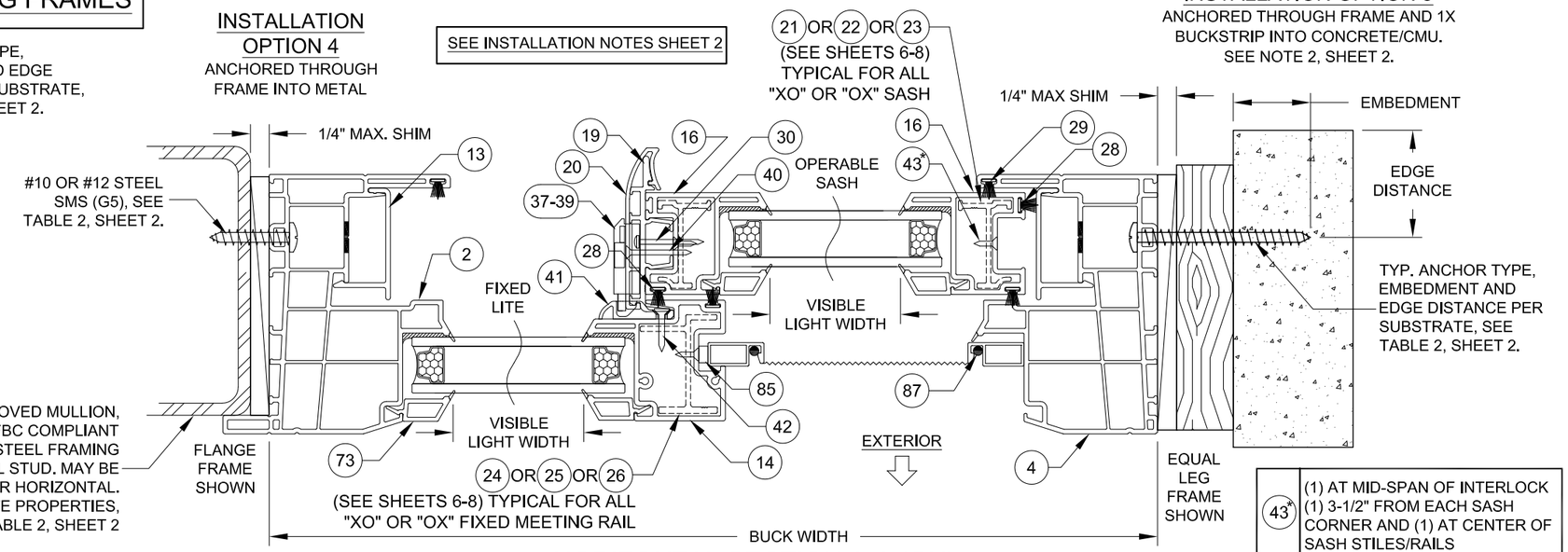

HORIZONTAL SECTION A-A (OX)

43*	(1) AT MID-SPAN OF INTERLOCK (1) 3-1/2" FROM EACH SASH CORNER AND (1) AT CENTER OF SASH STILES/RAILS

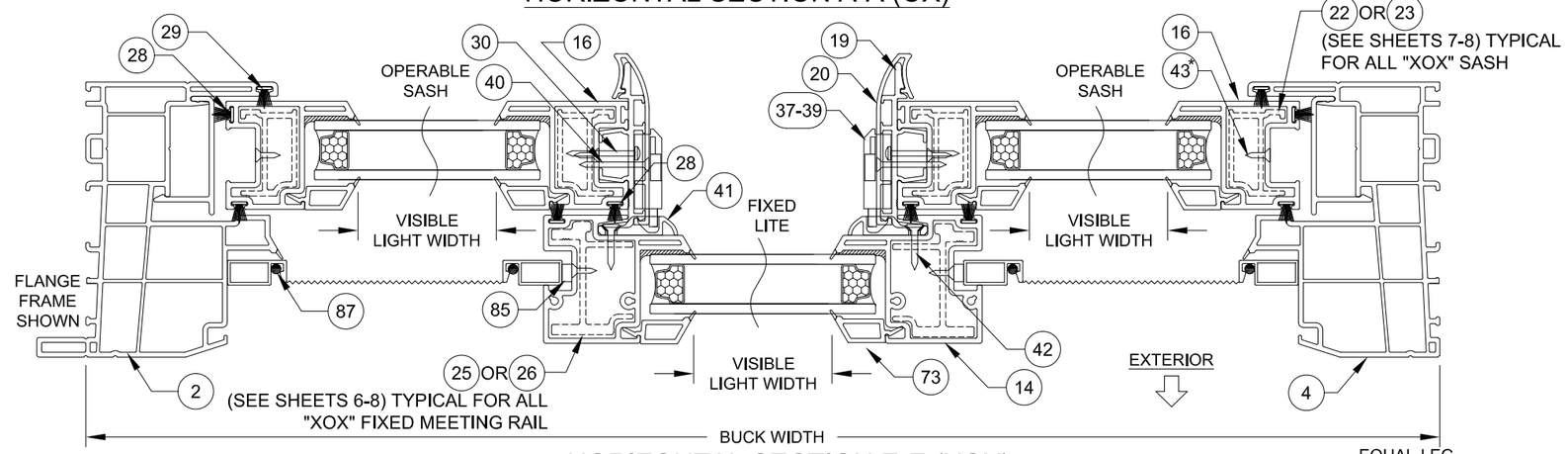

HORIZONTAL SECTION E-E (XOX)

INSTALLATION AS PER SECTION A-A ABOVE

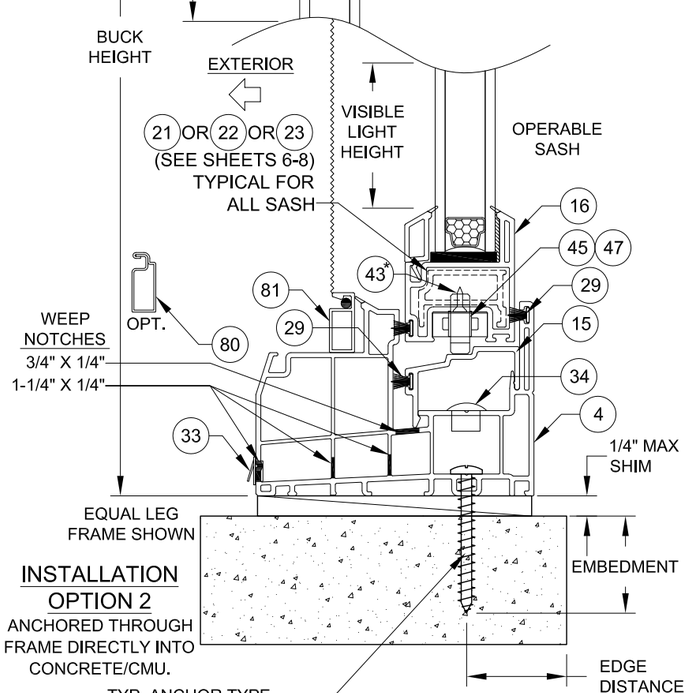

INSTALLATION OPTION 2

ANCHORED THROUGH FRAME DIRECTLY INTO CONCRETE/CMU.

VERTICAL SECTION B-B

VISIBLE LIGHT FORMULAS (EQUAL-LITE, XO & OX)

WIDTH: BUCK WIDTH / 2 - 4-1/4"
HEIGHT: BUCK HEIGHT - 7-1/4"

PRODUCT REVISED
as complying with the Florida Building Code
NOA-No. 23-0707.09
Expiration Date 09/24/2025
By Ishaq I. Chanda
Miami-Dade Product Control

PGT Custom Windows and Doors
1070 TECHNOLOGY DRIVE
N. VENICE, FL 34275
(941) 480-1600

PREPARED BY A. LYNN MILLER
1070 TECHNOLOGY DRIVE
N. VENICE, FL 34275
(941) 480-1600
REGISTRATION #29296

Title	VINYL SLIDING GLASS WINDOW (NI)	Date	05/15/15
Desc.	FLANGE & EQUAL-LEG FRAMES	Drawn By	JENS ROSOWSKI
Rev	NO CHANGES THIS SHEET - LY	Rev Date	06/15/23

Series	HR5410	Sheet	3 OF 15	DWG No.	HR5410-NOA	Rev.	D

ANTHONY LYNN MILLER
LICENSE
No. 58705
A. Lynn Miller 06/16/23
STATE OF FLORIDA
PROFESSIONAL ENGINEER

A. LYNN MILLER, P.E.
P.E.# 58705

INSTALLATION DETAILS FOR FIN AND J-CHANNEL FRAMES

INSTALLATION OPTION 5

ANCHORED THROUGH INTEGRAL FIN INTO 2X WOOD FRAME OR BUCK-STRIP. SEE NOTE 2, SHEET 2.

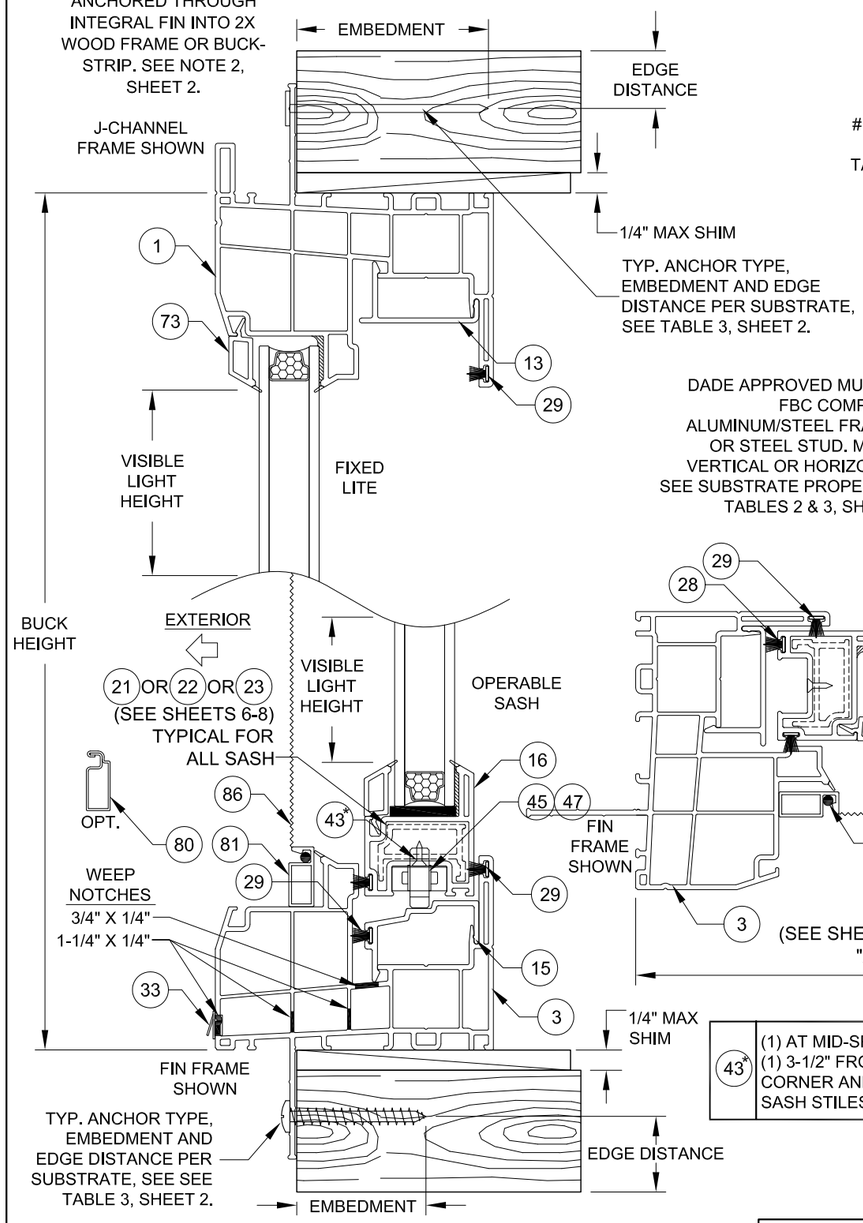

INSTALLATION OPTION 5

ANCHORED THROUGH INTEGRAL FIN INTO 2X WOOD FRAME OR BUCK-STRIP. SEE NOTE 2, SHEET 2.

VERTICAL SECTION D-D

INSTALLATION OPTION 7

ANCHORED THROUGH FRAME INTO METAL (INTEGRAL FIN/FLANGE REMOVED)

SEE INSTALLATION NOTES SHEET 2

INSTALLATION OPTION 6

ANCHORED THROUGH FRAME INTO 2X WOOD FRAME OR BUCKSTRIP. SEE NOTE 2, SHEET 2.

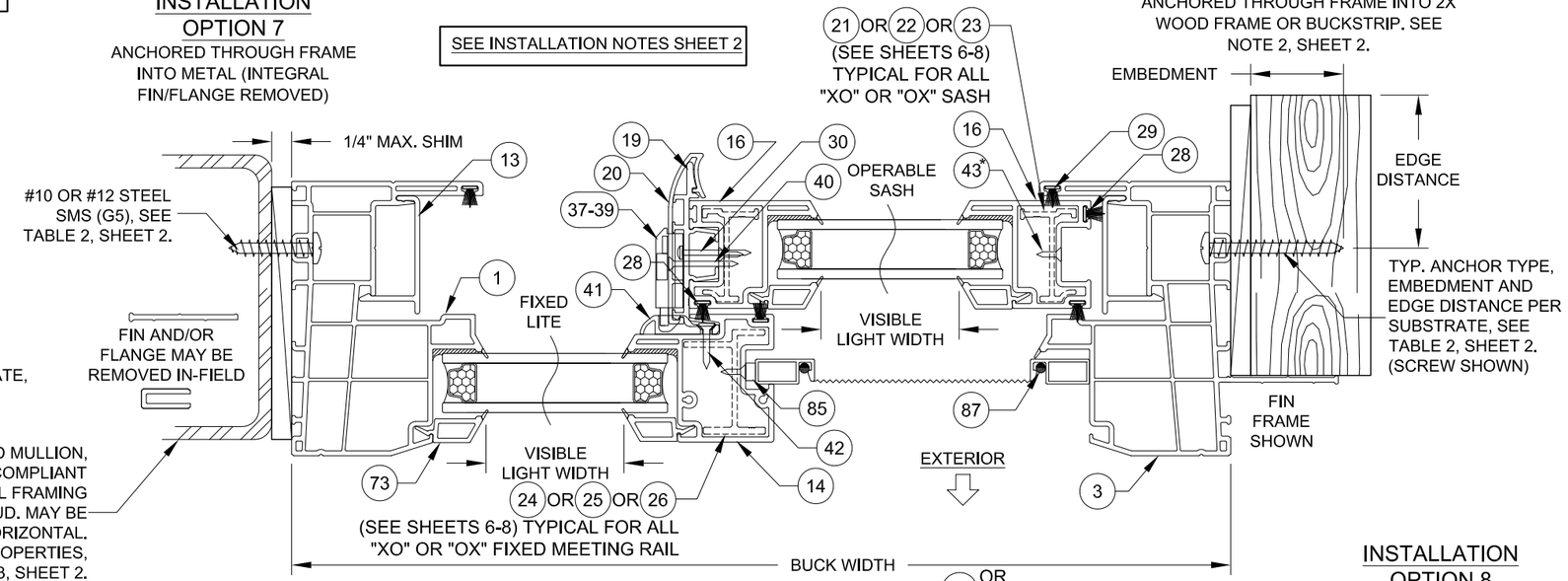

HORIZONTAL SECTION C-C (OX)

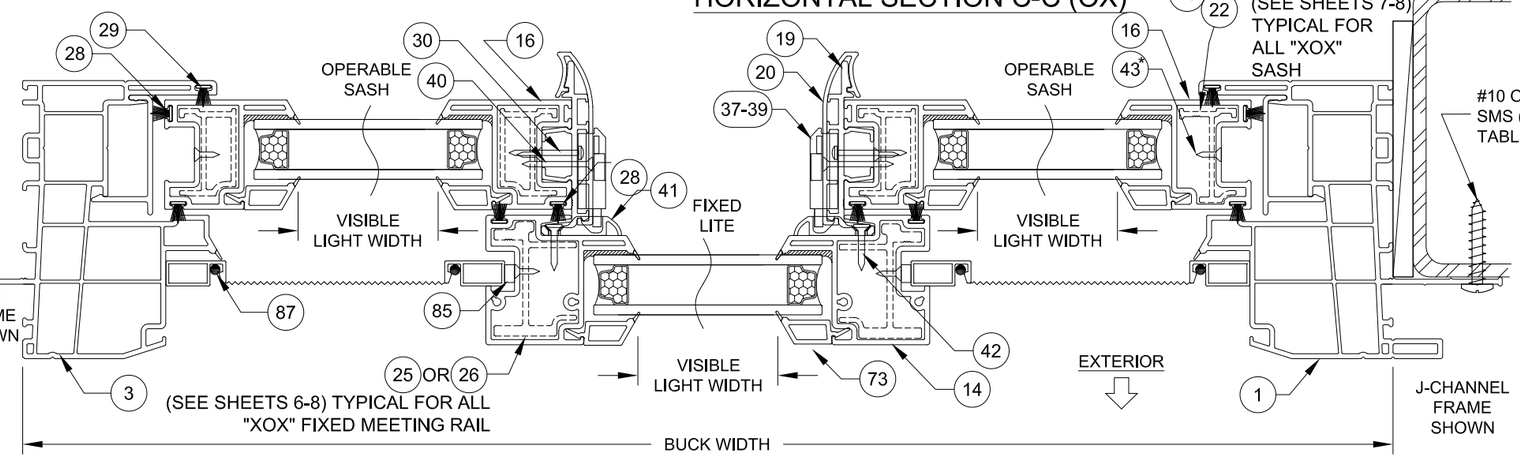

HORIZONTAL SECTION F-F (XOX)

INSTALLATION AS PER SECTION D-D ABOVE

INSTALLATION OPTION 8

ANCHORED THROUGH FIN INTO METAL (FLANGE MAY BE REMOVED)

#10 OR #12 STEEL SMS (G5), SEE TABLE 2, SHEET 2.

43*	(1) AT MID-SPAN OF INTERLOCK (1) 3-1/2" FROM EACH SASH CORNER AND (1) AT CENTER OF SASH STILES/RAILS

VISIBLE LIGHT FORMULAS (EQUAL-LITE, XO & OX)

WIDTH: BUCK WIDTH / 2 - 4-1/4"
HEIGHT: BUCK HEIGHT - 7-1/4"

PRODUCT REVISED
as complying with the Florida Building Code
NOA-No. 23-0707.09
Expiration Date 09/24/2025
By Ishaq I. Chanda
Miami-Dade Product Control

PGT Custom Windows and Doors
1070 TECHNOLOGY DRIVE
N. VENICE, FL 34275
(941) 480-1600

PREPARED BY A. LYNN MILLER
1070 TECHNOLOGY DRIVE
N. VENICE, FL 34275
(941) 480-1600

REGISTRATION #29296

Title	VINYL SLIDING GLASS WINDOW (NI)	Date	05/15/15
Desc.	J-CHANNEL & FIN FRAMES	Drawn By	JENS ROSOWSKI
Rev	NO CHANGES THIS SHEET - LY	Rev Date	06/15/23
Series	HR5410	Sheet	4 OF 15
DWG No.	HR5410-NOA	Rev.	D

ANTHONY LYNN MILLER
LICENSE
No. 58705
A. Lynn Miller 06/16/23
STATE OF FLORIDA
PROFESSIONAL ENGINEER

A. LYNN MILLER, P.E.
P.E.# 58705

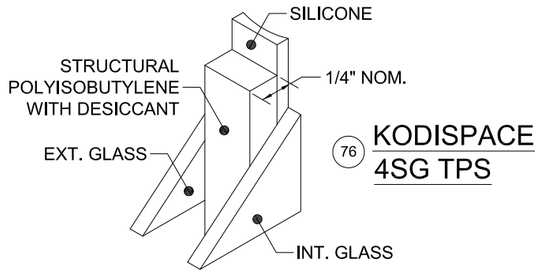

76 KODISPACE 4SG TPS

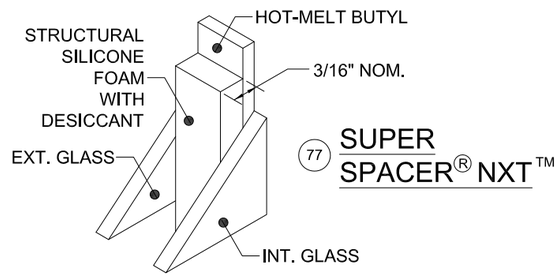

77 SUPER SPACER® NXT™

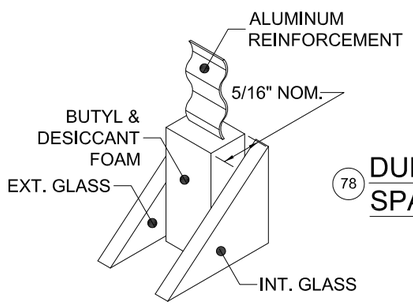

78 DURASEAL® SPACER

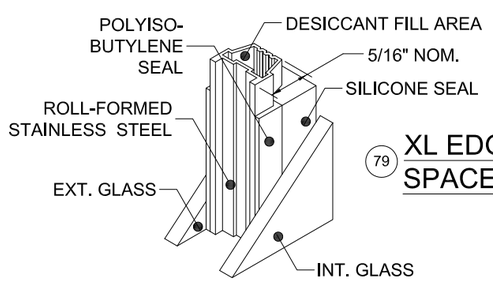

79 XL EDGE™ SPACER

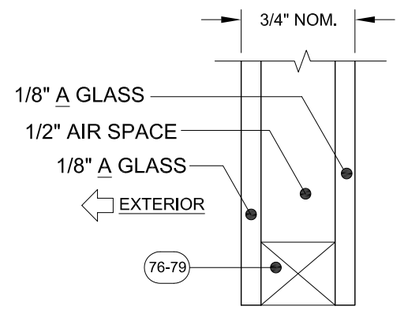

GLASS TYPE 1

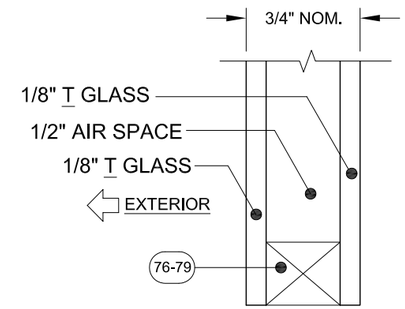

GLASS TYPE 2

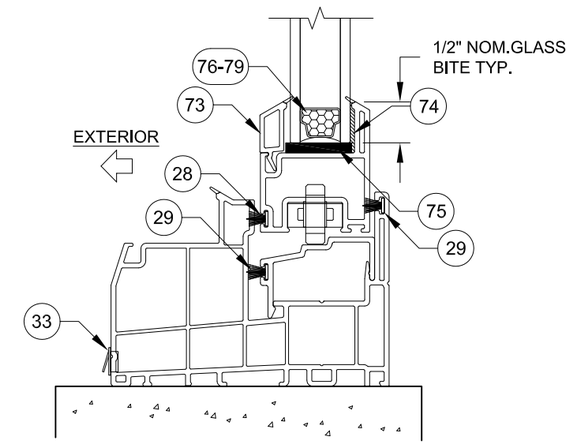

TYP. GLAZING DETAIL

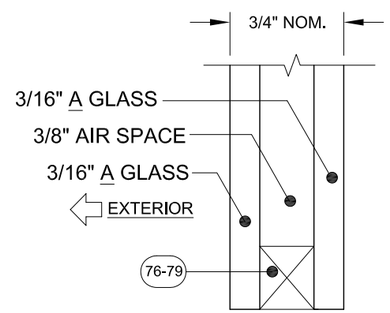

GLASS TYPE 3

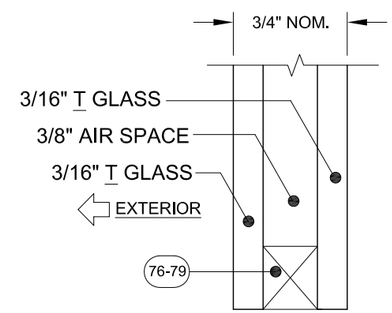

GLASS TYPE 4

GLAZING NOTES:
"A" = ANNEALED
"T" = TEMPERED

Part #	Description	Material
76	Kommerling 4SG TPS Spacer System	See this Sheet for Materials
77	Quanex Super Spacer nXT with Hot Melt Butyl	
78	Quanex Duraseal Spacer	
79	Cardinal XL Edge Spacer	

REFERENCE TEST REPORTS: FTL-8717, 8968 & 8970

PRODUCT REVISED
as complying with the Florida Building Code
NOA-No. 23-0707.09
Expiration Date 09/24/2025
By Ishaq I. Chanda
Miami-Dade Product Control

PGT Custom Windows and Doors
1070 TECHNOLOGY DRIVE
N. VENICE, FL 34275
(941) 480-1600

PREPARED BY A. LYNN MILLER
1070 TECHNOLOGY DRIVE
N. VENICE, FL 34275
(941) 480-1600
REGISTRATION #29296

Title	VINYL SLIDING GLASS WINDOW (NI)	Date	05/15/15
Desc.	GLAZING DETAILS	Drawn By	JENS ROSOWSKI
Rev	NO CHANGES THIS SHEET - LY	Rev Date	06/15/23
Series	HR5410	Sheet	5 OF 15
DWG No.	HR5410-NOA	Rev.	D

ANTHONY LYNN MILLER
LICENSE
No. 58705
A. Lynn Miller
06/16/23
STATE OF FLORIDA
PROFESSIONAL ENGINEER

A. LYNN MILLER, P.E.
P.E.# 58705

TABLE 5:

Index to All Design Pressure and Anchor Quantity Tables								
Config.	Max. Width	Max. Height	Glass Type	Reinf. Level	Design Pressure		Anchor Quantity	
					Table #	Page #	Table #	Page #
XO or OX	75"	54"	1	1	6	6	13	9
		54"		2	7	6	14	9
		63"		3	10	7	15	10
	75"	54"	2 - 4	1	6	6	13	9
		54"		2	7	6	14	9
		63"		3	10	7	15	10
		72"		4	11	8	16	10
XOX	120"	63"	1	3	8	7	17	11
	140"	63"	2 - 4	3	9	7	18	12
				4	12	8	19	13

TABLE 6:

Glass Types 1 - 4	Design Pressure (lbs/ft^2) for XO or OX Windows								
Reinf. Level R1		Window Buck Height							
		30"		36"		48"		54"	
Window Buck Width	25-1/2"	+65.0	-100.0	+65.0	-100.0	+65.0	-100.0	+65.0	-100.0
	28"	+65.0	-100.0	+65.0	-100.0	+65.0	-100.0	+65.0	-100.0
	36"	+65.0	-100.0	+65.0	-100.0	+65.0	-94.2	+65.0	-81.6
	42"	+65.0	-100.0	+65.0	-100.0	+65.0	-83.9	+65.0	-72.4
	48"	+65.0	-100.0	+65.0	-100.0	+65.0	-76.5	+65.0	-65.6
	60"	+65.0	-100.0	+65.0	-100.0	+65.0	-66.8	+56.5	-56.5
	75"	+65.0	-100.0	+65.0	-94.9	+60.3	-60.3	+50.0	-50.0

SEE TABLE 13 FOR ANCHORAGE

TABLE 7:

Glass Types 1 - 4	Design Pressure (lbs/ft^2) for XO or OX Windows								
Reinf. Level R2		Window Buck Height							
		30"		36"		48"		54"	
Window Buck Width	25-1/2"	+65.0	-130.0	+65.0	-130.0	+65.0	-130.0	+65.0	-130.0
	28"	+65.0	-130.0	+65.0	-130.0	+65.0	-130.0	+65.0	-130.0
	36"	+65.0	-130.0	+65.0	-130.0	+65.0	-116.5	+65.0	-109.5
	42"	+65.0	-130.0	+65.0	-130.0	+65.0	-91.7	+65.0	-82.4
	48"	+65.0	-130.0	+65.0	-129.4	+65.0	-85.9	+65.0	-72.6
	60"	+65.0	-130.0	+65.0	-114.8	+65.0	-83.5	+65.0	-71.8
	75"	+65.0	-109.5	+65.0	-94.9	+65.0	-72.9	+65.0*	-65.5*

* +65/-70 FOR GLASS TYPES 2-4

SEE TABLE 14 FOR ANCHORAGE

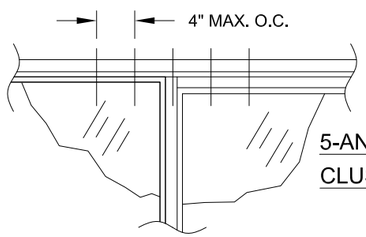

5-ANCHOR CLUSTER DETAIL

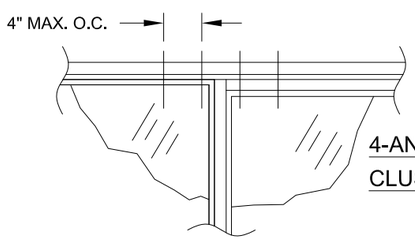

4-ANCHOR CLUSTER DETAIL

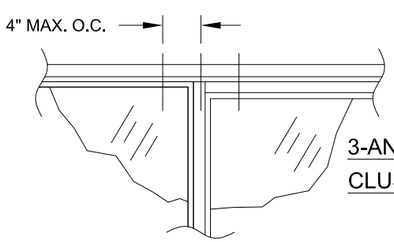

3-ANCHOR CLUSTER DETAIL

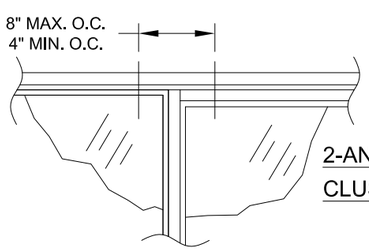

2-ANCHOR CLUSTER DETAIL

SECTION DETAIL FOR WINDOWS WITH LEVEL R1 REINFORCEMENT

(REINFORCEMENTS SHOWN IN FIGURES APPLY TO ALL FRAME TYPES & CONFIGURATIONS)

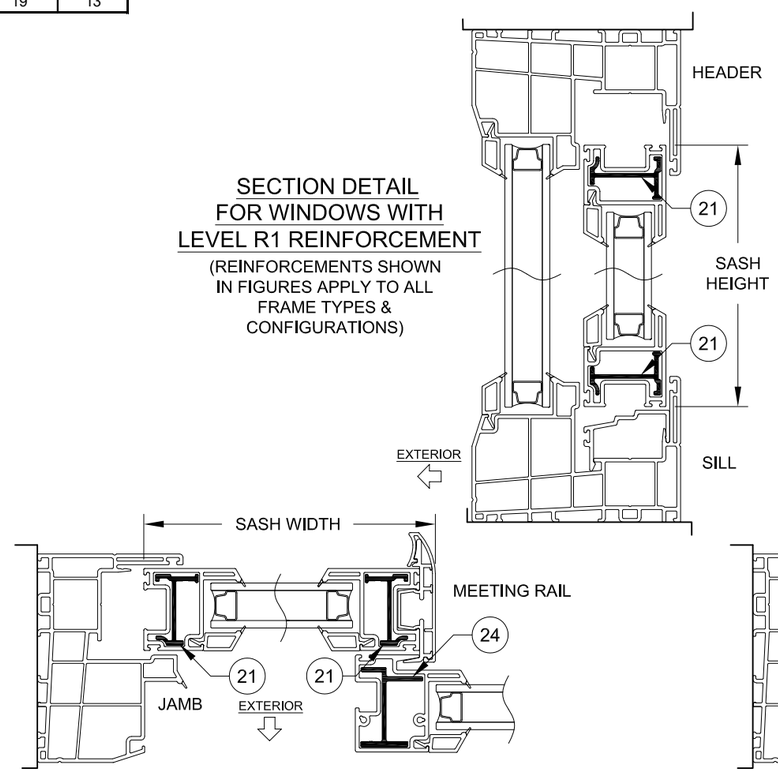

SECTION DETAIL FOR WINDOWS WITH LEVEL R2 REINFORCEMENT

(REINFORCEMENTS SHOWN IN FIGURES APPLY TO ALL FRAME TYPES & CONFIGURATIONS)

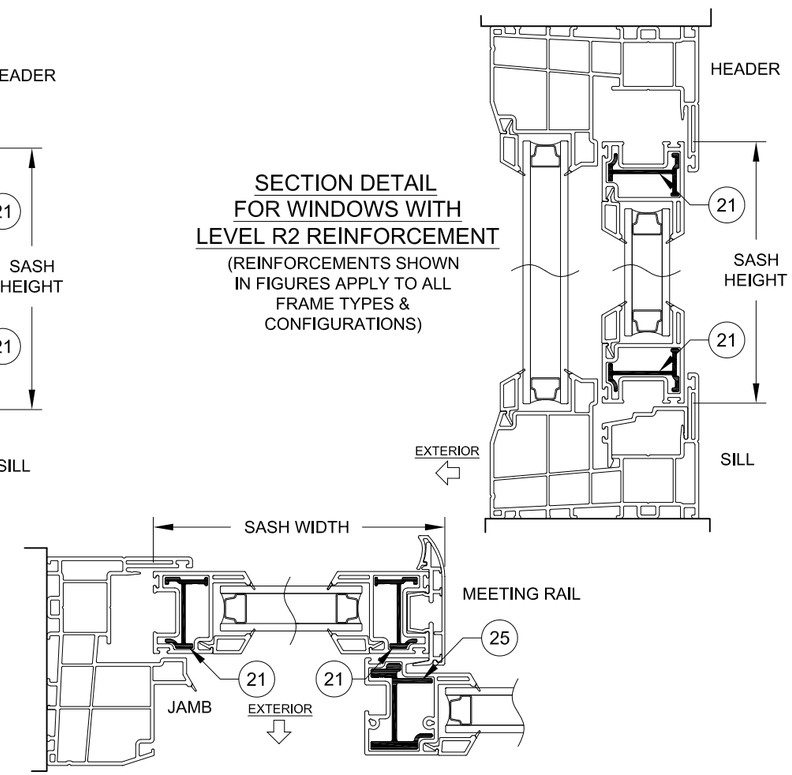

NOTES:
1) USE THESE TABLES FOR ALL WINDOWS INSTALLED THROUGH THE FRAME OR INTEGRAL FIN.
2) FRAME DIMENSIONS ARE BUCK WIDTH AND BUCK HEIGHT (SEE SHEETS 3-4). SASH SIZE IS AS PER THE FIGURE.
3) FOR SIZES NOT SHOWN, ROUND UP TO THE NEXT AVAILABLE WIDTH OR HEIGHT DIMENSION SHOWN ON THE TABLE.
4) "1/4-1/2-1/4" AND "1/3-1/3-1/3" INDICATE THAT THOSE STANDARD SASH CONFIGURATIONS FALL WITHIN THE SASH WIDTH RANGE IN THE ADJACENT COLUMN. "CUSTOM" INDICATES THAT NO STANDARD SASH CONFIGURATIONS FALL WITHIN THE RANGE

PRODUCT REVISED
as complying with the Florida Building Code
NOA–No. 23-0707.09
Expiration Date 09/24/2025
By Ishaq I. Chanda
Miami–Dade Product Control

PGT
Custom WIndows and Doors
1070 TECHNOLOGY DRIVE
N. VENICE, FL 34275
(941) 480-1600

PREPARED BY A. LYNN MILLER
1070 TECHNOLOGY DRIVE
N. VENICE, FL 34275

(941) 480-1600

REGISTRATION #29296

Title	VINYL SLIDING GLASS WINDOW (NI)			Date	05/15/15
Desc.	DESIGN PRESSURE TABLES		Drawn By	JENS ROSOWSKI	
Rev	NO CHANGES THIS SHEET - LY			Rev Date	06/15/23
Series	HR5410	Sheet 6 OF 15	DWG No.	HR5410-NOA	Rev. D

ANTHONY LYNN MILLER
LICENSE
No. 58705
A. Lynn Miller 06/16/23
STATE OF FLORIDA
PROFESSIONAL ENGINEER

A. LYNN MILLER, P.E.
P.E.# 58705

TABLE 8:

Glass Type 1 / Reinf. Level R3		Sash Configuration	Sash Width Range (in)	Design Pressure (lbs/ft²) for XOX Windows — Window Buck Height 30"		36"		48"		54"		63"	
Window Buck Width	35-1/4"	⅓-⅓-⅓	11.391 - 11.391	+65.0	-100.0	+65.0	-100.0	+65.0	-100.0	+65.0	-100.0	+65.0	-93.0
	38"	⅓-⅓-⅓	12.308 - 12.308	+65.0	-100.0	+65.0	-100.0	+65.0	-100.0	+65.0	-100.0	+65.0	-100.0
	45-1/8"	¼-½-¼	11.391 - 13.397	+65.0	-100.0	+65.0	-100.0	+65.0	-89.0	+65.0	-77.9	+65.0	-69.5
		⅓-⅓-⅓	13.398 - 14.683	+65.0	-100.0	+65.0	-100.0	+65.0	-100.0	+65.0	-100.0	+65.0	-96.5
	47-3/4"	¼-½-¼	11.391 - 12.297	+65.0	-100.0	+65.0	-100.0	+65.0	-85.6	+65.0	-72.2	+59.6	-59.6
		⅓-⅓-⅓	12.298 - 15.558	+65.0	-100.0	+65.0	-100.0	+65.0	-87.2	+65.0	-74.9	+65.0	-65.9
	52-1/8"	Custom	11.391 - 12.016	+65.0	-100.0	+65.0	-100.0	+65.0	-84.4	+65.0	-71.8	+56.3	-56.3
		¼-½-¼	12.017 - 13.397	+65.0	-100.0	+65.0	-100.0	+65.0	-85.0	+65.0	-71.8	+56.1	-56.1
		⅓-⅓-⅓	13.398 - 17.016	+65.0	-100.0	+65.0	-100.0	+65.0	-85.4	+65.0	-72.0	+58.7	-58.7
	60"	Custom	11.391 - 13.397	+65.0	-100.0	+65.0	-96.9	+65.0	-73.9	+65.0	-66.6	+55.9	-55.9
		¼-½-¼	13.398 - 15.360	+65.0	-100.0	+65.0	-100.0	+65.0	-80.8	+65.0	-70.7	+57.6	-57.6
		⅓-⅓-⅓	15.361 - 19.641	+65.0	-100.0	+65.0	-100.0	+65.0	-84.5	+65.0	-71.8	+56.3	-56.3
	75"	¼-½-¼	17.141 - 19.110	+65.0	-100.0	+65.0	-89.3	+65.0	-68.8	+61.4	-61.4	+52.5	-52.5
		⅓-⅓-⅓	19.111 - 24.641	+65.0	-100.0	+65.0	-98.1	+65.0	-74.5	+65.0	-67.2	+56.1	-56.1
	96"	⅓-⅓-⅓	27.641 - 32.516	+65.0	-100.0	+65.0	-89.3	+65.0	-68.8	+61.4	-61.4	+52.5	-52.5
		Custom	32.517 - 39.641	+65.0	-100.0	+65.0	-91.3	+65.0	-70.6	+63.0	-63.0	+53.7	-53.7
	120"	⅓-⅓-⅓	** - 39.641	+65.0	-100.0	+65.0	-89.3	+65.0	-68.8	+61.4	-61.4	+50.0	-50.0

** MIN. SASH SIZE = $\frac{\text{WINDOW WIDTH - 40.72}}{2}$

SEE TABLE 17 FOR ANCHORAGE

TABLE 9:

Glass Types 2 - 4 / Reinf. Level R3		Sash Configuration	Sash Width Range (in)	Design Pressure (lbs/ft²) for XOX Windows — Window Buck Height 30"		36"		48"		54"		63"	
Window Buck Width	35-1/4"	⅓-⅓-⅓	11.391 - 11.391	+65.0	-100.0	+65.0	-100.0	+65.0	-100.0	+65.0	-100.0	+65.0	-100.0
	38"	⅓-⅓-⅓	12.308 - 12.308	+65.0	-100.0	+65.0	-100.0	+65.0	-100.0	+65.0	-100.0	+65.0	-100.0
	45-1/8"	¼-½-¼	11.391 - 13.397	+65.0	-100.0	+65.0	-100.0	+65.0	-100.0	+65.0	-100.0	+65.0	-97.9
		⅓-⅓-⅓	13.398 - 14.683	+65.0	-100.0	+65.0	-100.0	+65.0	-100.0	+65.0	-100.0	+65.0	-100.0
	47-3/4"	¼-½-¼	11.391 - 12.297	+65.0	-100.0	+65.0	-100.0	+65.0	-100.0	+65.0	-100.0	+65.0	-95.2
		⅓-⅓-⅓	12.298 - 15.558	+65.0	-100.0	+65.0	-100.0	+65.0	-100.0	+65.0	-100.0	+65.0	-91.2
	52-1/8"	Custom	11.391 - 12.016	+65.0	-100.0	+65.0	-100.0	+65.0	-100.0	+65.0	-100.0	+65.0	-88.5
		¼-½-¼	12.017 - 13.397	+65.0	-100.0	+65.0	-100.0	+65.0	-100.0	+65.0	-100.0	+65.0	-87.5
		⅓-⅓-⅓	13.398 - 17.016	+65.0	-100.0	+65.0	-100.0	+65.0	-100.0	+65.0	-100.0	+65.0	-84.8
	60"	Custom	11.391 - 13.397	+65.0	-100.0	+65.0	-100.0	+65.0	-100.0	+65.0	-94.8	+65.0	-77.0
		¼-½-¼	13.398 - 15.360	+65.0	-100.0	+65.0	-100.0	+65.0	-100.0	+65.0	-94.9	+65.0	-77.7
		⅓-⅓-⅓	15.361 - 19.641	+65.0	-100.0	+65.0	-100.0	+65.0	-100.0	+65.0	-92.1	+65.0	-75.7
	75"	Custom	11.391 - 13.397	+65.0	-100.0	+65.0	-100.0	+65.0	-94.4	+65.0	-86.8	+65.0	-68.7
		¼-½-¼	13.398 - 19.110	+65.0	-100.0	+65.0	-100.0	+65.0	-97.3	+65.0	-80.4	+63.8	-63.8
		⅓-⅓-⅓	19.111 - 24.641	+65.0	-100.0	+65.0	-100.0	+65.0	-94.1	+65.0	-79.4	+64.3	-64.3
	96"	Custom	17.641 - 19.397	+65.0	-100.0	+65.0	-90.4	+65.0	-82.8	+65.0	-75.6	+60.9	-60.9
		¼-½-¼	19.398 - 24.360	+65.0	-100.0	+65.0	-97.4	+65.0	-87.8	+65.0	-74.2	+57.5	-57.5
		⅓-⅓-⅓	24.361 - 31.641	+65.0	-100.0	+65.0	-100.0	+65.0	-85.0	+65.0	-69.9	+55.2	-55.2
	120"	¼-½-¼	29.641 - 32.515	+65.0	-100.0	+65.0	-90.4	+65.0	-82.8	+65.0	-68.6	+52.7	-52.7
		⅓-⅓-⅓	32.516 - 39.641	+65.0	-100.0	+65.0	-100.0	+65.0	-81.4	+65.0	-65.6	+50.5	-50.5
	140"	Custom	** - 39.641	+65.0	-100.0	+65.0	-90.4	+65.0	-81.4	+65.0	-65.6	+50.0	-50.0

** MIN. SASH SIZE = $\frac{\text{WINDOW WIDTH - 60.72}}{2}$

SEE TABLE 18 FOR ANCHORAGE

NOTES:
1) USE THESE TABLES FOR ALL WINDOWS INSTALLED THROUGH THE FRAME OR INTEGRAL FIN.
2) FRAME DIMENSIONS ARE BUCK WIDTH AND BUCK HEIGHT (SEE SHEETS 3-4). SASH SIZE IS AS PER THE FIGURE.
3) FOR SIZES NOT SHOWN, ROUND UP TO THE NEXT AVAILABLE WIDTH OR HEIGHT DIMENSION SHOWN ON THE TABLE.
4) "1/4-1/2-1/4" AND "1/3-1/3-1/3" INDICATE THAT THOSE STANDARD SASH CONFIGURATIONS FALL WITHIN THE SASH WIDTH RANGE IN THE ADJACENT COLUMN. "CUSTOM" INDICATES THAT NO STANDARD SASH CONFIGURATIONS FALL WITHIN THE RANGE.

TABLE 10:

Glass Types 1 - 4 / Reinf. Level R3		Design Pressure (lbs/ft²) for XO or OX Windows — Window Buck Height 30"		36"		48"		54"		63"	
Window Buck Width	25-1/2"	+65.0	-100.0	+65.0	-100.0	+65.0	-100.0	+65.0	-100.0	+65.0	-100.0
	28"	+65.0	-100.0	+65.0	-100.0	+65.0	-100.0	+65.0	-100.0	+65.0	-100.0
	36"	+65.0	-100.0	+65.0	-100.0	+65.0	-100.0	+65.0	-100.0	+65.0	-85.4
	42"	+65.0	-100.0	+65.0	-100.0	+65.0	-91.7	+65.0	-82.4	+65.0	-74.1
	48"	+65.0	-100.0	+65.0	-100.0	+65.0	-85.9	+65.0	-72.6	+60.9	-60.9
	60"	+65.0	-100.0	+65.0	-100.0	+65.0	-83.5	+65.0	-70.9	+56.7	-56.7
	75"	+65.0	-100.0	+65.0	-94.9	+65.0	-72.9	+62.8	-62.8	+50.0	-50.0

SEE TABLE 15 FOR ANCHORAGE

SECTION DETAIL
FOR WINDOWS WITH
LEVEL R3 REINFORCEMENT

(REINFORCEMENTS SHOWN IN FIGURES APPLY TO ALL FRAME TYPES & CONFIGURATIONS)

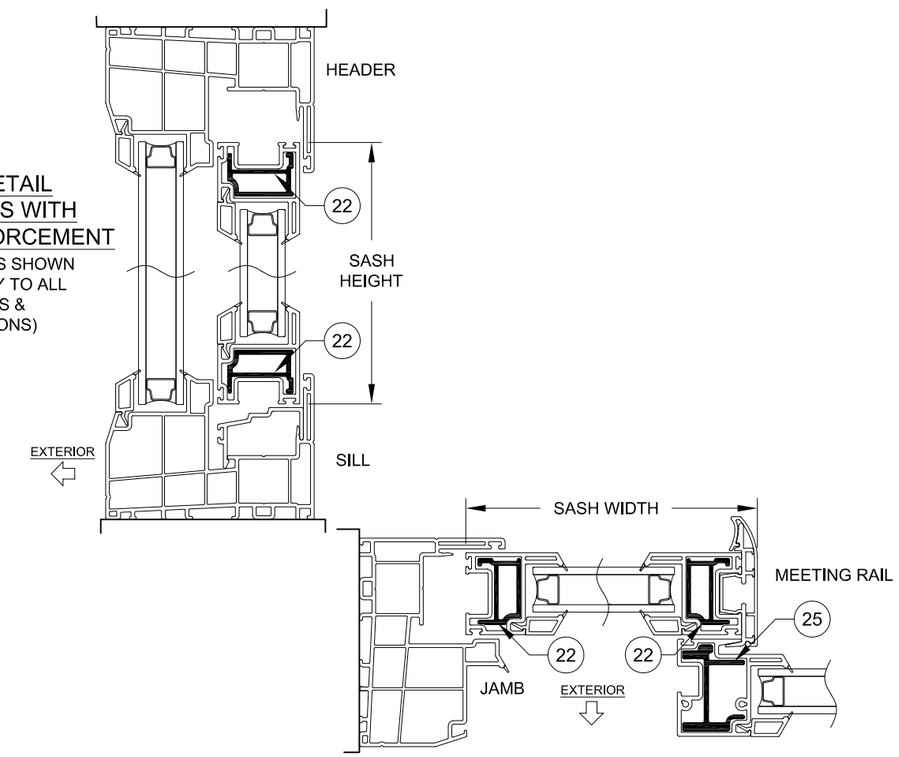

PRODUCT REVISED
as complying with the Florida Building Code
NOA–No. 23-0707.09
Expiration Date 09/24/2025
By Ishaq I. Chanda
Miami–Dade Product Control

PGT
Custom Windows and Doors
1070 TECHNOLOGY DRIVE
N. VENICE, FL 34275
(941) 480-1600

PREPARED BY A. LYNN MILLER
1070 TECHNOLOGY DRIVE
N. VENICE, FL 34275
(941) 480-1600
REGISTRATION #29296

Title	VINYL SLIDING GLASS WINDOW (NI)	Date	05/15/15
Desc.	DESIGN PRESSURE TABLES	Drawn By	JENS ROSOWSKI
Rev.	NO CHANGES THIS SHEET - LY	Rev Date	06/15/23
Series	HR5410	Sheet	7 OF 15
DWG No.	HR5410-NOA	Rev.	D

ANTHONY LYNN MILLER
LICENSE
No. 58705
A. Lynn Miller 06/16/23
STATE OF FLORIDA
PROFESSIONAL ENGINEER

A. LYNN MILLER, P.E.
P.E.# 58705

TABLE 11:

Glass Types 2 - 4		Design Pressure (lbs/ft^2) for XO or OX Windows									
Reinf. Level R4		Window Buck Height									
		36"		48"		54"		63"		72"	
Window Buck Width	25-1/2"	+65.0	-130.0	+65.0	-130.0	+65.0	-130.0	+65.0	-130.0	+65.0	-130.0
	28"	+65.0	-130.0	+65.0	-130.0	+65.0	-130.0	+65.0	-130.0	+65.0	-130.0
	36"	+65.0	-130.0	+65.0	-130.0	+65.0	-130.0	+65.0	-130.0	+65.0	-123.3
	42"	+65.0	-130.0	+65.0	-130.0	+65.0	-130.0	+65.0	-126.8	+65.0	-108.2
	48"	+65.0	-130.0	+65.0	-130.0	+65.0	-130.0	+65.0	-114.2	+65.0	-97.1
	60"	+65.0	-130.0	+65.0	-130.0	+65.0	-112.6	+65.0	-94.1	+65.0	-81.7
	75"	+65.0	-130.0	+65.0	-119.3	+65.0	-104.0	+65.0	-84.2	+65.0	-70.0

SEE TABLE 16 FOR ANCHORAGE

TABLE 12:

Glass Types 2 - 4		Sash Configuration	Sash Width Range (in)	Design Pressure (lbs/ft^2) for XOX Windows									
Reinf. Level R4				Window Buck Height									
				30"		36"		48"		54"		63"	
Window Buck Width	35-1/4"	⅓-⅓-⅓	11.391 - 11.391	+65.0	-130.0	+65.0	-130.0	+65.0	-130.0	+65.0	-130.0	+65.0	-130.0
	38"	⅓-⅓-⅓	12.308 - 12.308	+65.0	-130.0	+65.0	-130.0	+65.0	-130.0	+65.0	-130.0	+65.0	-130.0
	45-1/8"	¼-½-¼	11.391 - 13.397	+65.0	-130.0	+65.0	-130.0	+65.0	-130.0	+65.0	-130.0	+65.0	-130.0
		⅓-⅓-⅓	13.398 - 14.683	+65.0	-130.0	+65.0	-130.0	+65.0	-130.0	+65.0	-130.0	+65.0	-130.0
	47-3/4"	¼-½-¼	11.391 - 12.297	+65.0	-130.0	+65.0	-130.0	+65.0	-130.0	+65.0	-130.0	+65.0	-128.9
		⅓-⅓-⅓	12.298 - 15.558	+65.0	-130.0	+65.0	-130.0	+65.0	-130.0	+65.0	-130.0	+65.0	-127.7
	52-1/8"	Custom	11.391 - 12.016	+65.0	-130.0	+65.0	-130.0	+65.0	-130.0	+65.0	-116.2	+65.0	-98.2
		¼-½-¼	12.017 - 13.397	+65.0	-130.0	+65.0	-130.0	+65.0	-130.0	+65.0	-121.3	+65.0	-104.3
		⅓-⅓-⅓	13.398 - 17.016	+65.0	-130.0	+65.0	-130.0	+65.0	-130.0	+65.0	-130.0	+65.0	-118.7
	60"	Custom	11.391 - 13.397	+65.0	-130.0	+65.0	-130.0	+65.0	-120.4	+65.0	-104.8	+65.0	-86.2
		¼-½-¼	13.398 - 15.360	+65.0	-130.0	+65.0	-130.0	+65.0	-127.2	+65.0	-108.2	+65.0	-89.2
		⅓-⅓-⅓	15.361 - 19.641	+65.0	-130.0	+65.0	-130.0	+65.0	-130.0	+65.0	-116.4	+65.0	-98.5
	75"	Custom	11.391 - 13.397	+65.0	-119.7	+65.0	-109.6	+65.0	-94.4	+65.0	-86.8	+65.0	-75.2
		¼-½-¼	13.398 - 19.110	+65.0	-130.0	+65.0	-121.2	+65.0	-102.2	+65.0	-91.7	+65.0	-79.3
		⅓-⅓-⅓	19.111 - 24.641	+65.0	-130.0	+65.0	-130.0	+65.0	-121.1	+65.0	-105.2	+65.0	-86.4
	96"	Custom	17.641 - 19.397	+65.0	-100.0	+65.0	-90.4	+65.0	-82.8	+65.0	-75.6	+65.0*	-67.3*
		¼-½-¼	19.398 - 24.360	+65.0	-106.9	+65.0	-97.4	+65.0	-87.8	+65.0	-80.2	+65.0	-70.4
		⅓-⅓-⅓	24.361 - 31.641	+65.0	-130.0	+65.0	-124.2	+65.0	-103.8	+65.0	-92.7	+65.0	-77.3
	120"	¼-½-¼	29.641 - 32.515	+65.0	-100.0	+65.0	-90.4	+65.0	-82.8	+65.0	-75.6	+65.0*	-67.3*
		⅓-⅓-⅓	32.516 - 39.641	+65.0	-111.6	+65.0	-103.0	+65.0	-90.6	+65.0	-83.4	+65.0	-70.7
	140"	Custom	** - 39.641	+65.0	-100.0	+65.0	-90.4	+65.0	-82.8	+65.0	-75.6	+65.0*	-67.3*

* +65/-70 FOR GLASS TYPES 2 & 4

SEE TABLE 19 FOR ANCHORAGE

** MIN. SASH SIZE = $\frac{\text{WINDOW WIDTH - 60.72}}{2}$

SECTION DETAIL
FOR WINDOWS WITH
LEVEL R4 REINFORCEMENT

(REINFORCEMENTS SHOWN IN FIGURES APPLY TO ALL FRAME TYPES & CONFIGURATIONS)

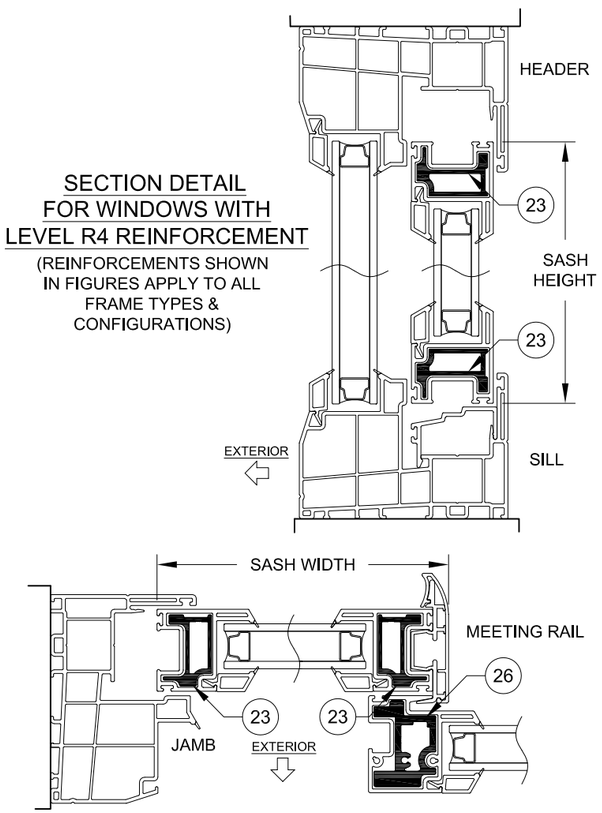

NOTES:
1) USE THESE TABLES FOR ALL WINDOWS INSTALLED THROUGH THE FRAME OR INTEGRAL FIN.
2) FRAME DIMENSIONS ARE BUCK WIDTH AND BUCK HEIGHT (SEE SHEETS 3-4). SASH SIZE IS AS PER THE FIGURE.
3) FOR SIZES NOT SHOWN, ROUND UP TO THE NEXT AVAILABLE WIDTH OR HEIGHT DIMENSION SHOWN ON THE TABLE.
4) "1/4-1/2-1/4" AND "1/3-1/3-1/3" INDICATE THAT THOSE STANDARD SASH CONFIGURATIONS FALL WITHIN THE SASH WIDTH RANGE IN THE ADJACENT COLUMN. "CUSTOM" INDICATES THAT NO STANDARD SASH CONFIGURATIONS FALL WITHIN THE RANGE.

PRODUCT REVISED
as complying with the Florida Building Code
NOA–No. 23-0707.09
Expiration Date 09/24/2025
By Ishaq I. Chanda
Miami–Dade Product Control

PGT Custom Windows and Doors
1070 TECHNOLOGY DRIVE
N. VENICE, FL 34275
(941) 480-1600

PREPARED BY A. LYNN MILLER
1070 TECHNOLOGY DRIVE
N. VENICE, FL 34275
(941) 480-1600
REGISTRATION #29296

Title	VINYL SLIDING GLASS WINDOW (NI)	Date	05/15/15
Desc.	DESIGN PRESSURE TABLES	Drawn By	JENS ROSOWSKI
Rev	NO CHANGES THIS SHEET - LY	Rev Date	06/15/23
Series	HR5410	Sheet	8 OF 15
DWG No.	HR5410-NOA	Rev.	D

ANTHONY LYNN MILLER
LICENSE
No. 58705
A. Lynn Miller
06/16/23
STATE OF FLORIDA
PROFESSIONAL ENGINEER

A. LYNN MILLER, P.E.
P.E.# 58705

TABLE 13:

Glass Types 1 - 4 / Reinf. Level R1		Sash Width (in)	Anchor Quantities for XO or OX Windows															
			30" Height		36" Height		48" Height		54" Height		30" Height		36" Height		48" Height		54" Height	
			Head & Sill	Jamb	Head & Sill	Jamb	Head & Sill	Jamb	Head & Sill	Jamb	Head & Sill	Jamb	Head & Sill	Jamb	Head & Sill	Jamb	Head & Sill	Jamb
			Anchor Group A								Anchor Group C							
Window Buck Width	25-1/2"	12.147	1+C2+1	2	1+C2+1	3	1+C2+1	3	1+C2+1	3	1+C2+1	2	1+C2+1	3	1+C2+1	3	1+C2+1	3
	28"	13.397	1+C2+1	2	1+C2+1	3	1+C2+1	3	1+C2+1	3	1+C2+1	2	1+C2+1	3	1+C2+1	3	1+C2+1	3
	36"	17.397	1+C2+1	2	1+C2+1	3	1+C2+1	3	1+C2+1	3	1+C2+1	2	1+C2+1	3	1+C2+1	3	1+C2+1	3
	42"	20.397	1+C2+1	2	1+C2+1	3	1+C2+1	3	1+C2+1	3	1+C2+1	2	1+C2+1	3	1+C2+1	3	1+C2+1	3
	48"	23.397	1+C2+1	2	1+C2+1	3	1+C2+1	3	1+C2+1	3	1+C2+1	2	1+C2+1	3	1+C2+1	3	1+C2+1	3
	60"	29.397	2+C2+2	2	2+C2+2	3	2+C2+2	3	2+C2+2	3	2+C2+2	2	2+C2+2	3	2+C2+2	3	2+C2+2	3
	75"	36.897	2+C2+2	2	2+C2+2	3	2+C2+2	3	2+C2+2	3	2+C2+2	2	2+C2+2	3	2+C2+2	3	2+C2+2	3
			Anchor Group B								Anchor Group D							
Window Buck Width	25-1/2"	12.147	1+C2+1	2	1+C2+1	3	1+C2+1	3	1+C2+1	3	1+C2+1	2	1+C2+1	3	1+C2+1	3	1+C2+1	3
	28"	13.397	1+C2+1	2	1+C2+1	3	1+C2+1	3	1+C2+1	3	1+C2+1	2	1+C2+1	3	1+C2+1	3	1+C2+1	3
	36"	17.397	1+C2+1	2	1+C2+1	3	1+C2+1	3	1+C2+1	3	1+C2+1	2	1+C2+1	3	1+C2+1	3	1+C2+1	3
	42"	20.397	1+C2+1	2	1+C2+1	3	1+C2+1	3	1+C2+1	3	1+C2+1	2	1+C2+1	3	1+C2+1	3	1+C2+1	3
	48"	23.397	1+C2+1	2	1+C2+1	3	1+C2+1	3	1+C2+1	3	1+C2+1	2	1+C2+1	3	1+C2+1	3	1+C2+1	3
	60"	29.397	2+C2+2	2	2+C2+2	3	2+C2+2	3	2+C2+2	3	2+C2+2	2	2+C2+2	3	2+C2+2	3	2+C2+2	3
	75"	36.897	2+C2+2	2	2+C2+2	3	2+C2+2	3	2+C2+2	3	2+C2+2	2	2+C2+2	3	2+C2+2	3	2+C2+2	3

SEE TABLE 6 FOR DESIGN PRESSURE

TABLE 14:

Glass Types 1 - 4 / Reinf. Level R2		Sash Width (in)	Anchor Quantities for XO or OX Windows															
			30" Height		36" Height		48" Height		54" Height		30" Height		36" Height		48" Height		54" Height	
			Head & Sill	Jamb	Head & Sill	Jamb	Head & Sill	Jamb	Head & Sill	Jamb	Head & Sill	Jamb	Head & Sill	Jamb	Head & Sill	Jamb	Head & Sill	Jamb
			Anchor Group A								Anchor Group C							
Window Buck Width	25-1/2"	12.147	Not Allowed								1+C2+1	2	1+C2+1	3	1+C2+1	3	1+C2+1	3
	28"	13.397									1+C2+1	2	1+C2+1	3	1+C2+1	3	1+C2+1	3
	36"	17.397									1+C2+1	2	1+C2+1	3	1+C2+1	3	1+C2+1	3
	42"	20.397									1+C2+1	2	1+C2+1	3	1+C2+1	3	1+C2+1	3
	48"	23.397									1+C2+1	2	1+C2+1	3	1+C2+1	3	1+C2+1	3
	60"	29.397									2+C2+2	2	2+C2+2	3	2+C2+2	3	2+C2+2	3
	75"	36.897									2+C2+2	2	2+C2+2	3	2+C2+2	3	2+C2+2	3
			Anchor Group B								Anchor Group D							
Window Buck Width	25-1/2"	12.147	1+C2+1	2	1+C2+1	3	1+C2+1	3	1+C2+1	3	1+C2+1	2	1+C2+1	3	1+C2+1	3	1+C2+1	3
	28"	13.397	1+C2+1	2	1+C2+1	3	1+C2+1	3	1+C2+1	3	1+C2+1	2	1+C2+1	3	1+C2+1	3	1+C2+1	3
	36"	17.397	1+C2+1	2	1+C2+1	3	1+C2+1	3	1+C2+1	3	1+C2+1	2	1+C2+1	3	1+C2+1	3	1+C2+1	3
	42"	20.397	1+C2+1	2	1+C2+1	3	1+C2+1	3	1+C2+1	3	1+C2+1	2	1+C2+1	3	1+C2+1	3	1+C2+1	3
	48"	23.397	1+C2+1	2	1+C2+1	3	1+C2+1	3	1+C2+1	3	1+C2+1	2	1+C2+1	3	1+C2+1	3	1+C2+1	3
	60"	29.397	2+C2+2	2	2+C2+2	3	2+C2+2	3	2+C2+2	3	2+C2+2	2	2+C2+2	3	2+C2+2	3	2+C2+2	3
	75"	36.897	2+C2+2	2	2+C2+2	3	2+C2+2	3	2+C2+2	3	2+C2+2	2	2+C2+2	3	2+C2+2	3	2+C2+2	3

SEE TABLE 7 FOR DESIGN PRESSURE

MINIMUM ANCHOR QUANTITIES SHOWN. ALL ANCHORAGE MUST ALSO COMPLY WITH THE MAX. O.C. SPACING SHOWN ON THE ELEVATIONS.

Max. Anchor O.C. Spacing for "Integral-Fin" Installation	Anchor Group E	Anchor Group F
	2.5"	4"

GUIDE TO USING ANCHOR QUANTITY TABLES

FOR OX WINDOWS (XO SIMILAR):

ANCHOR QUANTITY PER JAMB

2+C3+2	3

HEAD AND SILL ANCHOR QUANTITY:
(2) ANCHORS AT THE FIXED SECTION
+ A CLUSTER OF (3) ANCHORS CENTERED AT THE MEETING RAIL
+ (2) ANCHORS AT THE SASH
TOTAL OF 7 ANCHORS AT THE HEAD AND 7 ANCHORS AT THE SILL.

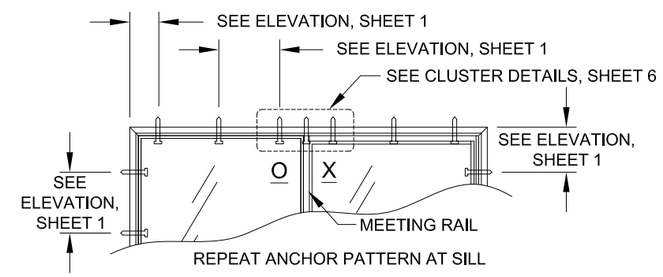

FOR XOX WINDOWS:

ANCHOR QUANTITY PER JAMB

1+C3+2+C3+1	4

HEAD AND SILL ANCHOR QUANTITY:
(1) ANCHOR AT THE SASH
+ A CLUSTER OF (3) ANCHORS CENTERED AT THE MEETING RAIL
+ (2) ANCHORS AT THE FIXED SECTION
+ A CLUSTER OF (3) ANCHORS CENTERED AT THE MEETING RAIL
+ (1) ANCHOR AT THE SASH
TOTAL OF 10 ANCHORS AT THE HEAD AND 10 ANCHORS AT THE SILL.

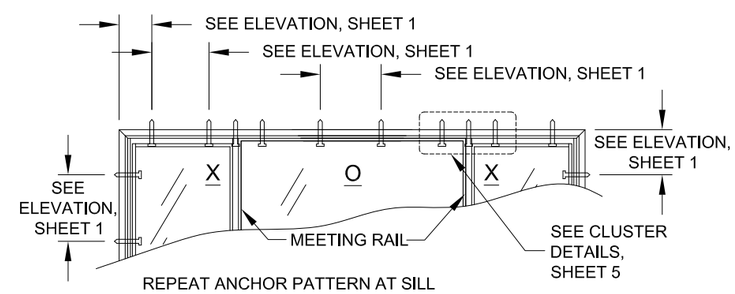

Max. Anchor O.C. Spacing for "Integral-Fin" Installation	Anchor Group F
	4"

NOTES:
1) FRAME DIMENSIONS ARE BUCK WIDTH AND BUCK HEIGHT (SEE SHEETS 3-4). SASH SIZE IS AS PER THE FIGURES ON SHEETS 6-8.
2) FOR SIZES NOT SHOWN, ROUND UP TO THE NEXT AVAILABLE WIDTH OR HEIGHT DIMENSION SHOWN ON THE TABLE.

PRODUCT REVISED
as complying with the Florida Building Code
NOA-No. 23-0707.09
Expiration Date 09/24/2025
By Ishaq I. Chanda
Miami-Dade Product Control

Revision: D) UPDATED TO 2023 BUILDING CODE.
LY - 06/15/23

PREPARED BY A. LYNN MILLER
1070 TECHNOLOGY DRIVE
N. VENICE, FL 34275
(941) 480-1600
REGISTRATION #29296

PGT Custom Windows and Doors
1070 TECHNOLOGY DRIVE
N. VENICE, FL 34275
(941) 480-1600

Series	Desc.	Sheet	DWG No.	Rev.
HR5410	ANCHOR QUANTITY TABLES	9 OF 15	HR5410-NOA	D

Title: VINYL HORIZONTAL ROLLER WINDOW (NI)
Drawn By: JENS ROSOWSKI
Date: 05/15/15

ANTHONY LYNN MILLER
LICENSE
No. 58705
STATE OF FLORIDA
PROFESSIONAL ENGINEER
06/16/23
A. LYNN MILLER, P.E.
P.E.# 58705

TABLE 15:

Glass Types 1 - 4 / Reinf. Level R3		Sash Width (in)	Anchor Quantities for XO or OX Windows																					
			30" Height		36" Height		48" Height		54" Height		63" Height		30" Height		36" Height		48" Height		54" Height		63" Height	
			Head & Sill	Jamb	Head & Sill	Jamb	Head & Sill	Jamb	Head & Sill	Jamb	Head & Sill	Jamb	Head & Sill	Jamb	Head & Sill	Jamb	Head & Sill	Jamb	Head & Sill	Jamb	Head & Sill	Jamb
			Anchor Group A										Anchor Group C									
Window Buck Width	25-1/2"	12.147	1+C2+1	2	1+C2+1	3	1+C2+1	4	1+C2+1	4	1+C2+1	4	1+C2+1	2	1+C2+1	3	1+C2+1	4	1+C2+1	4	1+C2+1	4
	28"	13.397	1+C2+1	2	1+C2+1	3	1+C2+1	4	1+C2+1	4	1+C3+1	4	1+C2+1	2	1+C2+1	3	1+C2+1	4	1+C2+1	4	1+C2+1	4
	36"	17.397	1+C2+1	2	1+C2+1	3	1+C2+1	4	1+C3+1	4	1+C3+1	4	1+C2+1	2	1+C2+1	3	1+C2+1	4	1+C2+1	4	1+C2+1	4
	42"	20.397	1+C2+1	2	1+C2+1	3	1+C2+1	4	1+C3+1	4	1+C3+1	4	1+C2+1	2	1+C2+1	3	1+C2+1	4	1+C2+1	4	1+C2+1	4
	48"	23.397	1+C2+1	2	1+C2+1	3	1+C2+1	4	1+C2+1	4	1+C2+1	4	1+C2+1	2	1+C2+1	3	1+C2+1	4	1+C2+1	4	1+C2+1	4
	60"	29.397	2+C2+2	2	2+C2+2	3	2+C3+2	4	2+C3+2	4	2+C3+2	4	2+C2+2	2	2+C2+2	3	2+C2+2	4	2+C2+2	4	2+C2+2	4
	75"	36.897	2+C2+2	2	2+C2+2	3	2+C3+2	4	2+C3+2	4	2+C3+2	4	2+C2+2	2	2+C2+2	3	2+C2+2	4	2+C2+2	4	2+C2+2	4
			Anchor Group B										Anchor Group D									
Window Buck Width	25-1/2"	12.147	1+C2+1	2	1+C2+1	3	1+C2+1	4	1+C2+1	4	1+C2+1	4	1+C2+1	2	1+C2+1	3	1+C2+1	4	1+C2+1	4	1+C2+1	4
	28"	13.397	1+C2+1	2	1+C2+1	3	1+C2+1	4	1+C2+1	4	1+C2+1	4	1+C2+1	2	1+C2+1	3	1+C2+1	4	1+C2+1	4	1+C2+1	4
	36"	17.397	1+C2+1	2	1+C2+1	3	1+C2+1	4	1+C2+1	4	1+C2+1	4	1+C2+1	2	1+C2+1	3	1+C2+1	4	1+C2+1	4	1+C2+1	4
	42"	20.397	1+C2+1	2	1+C2+1	3	1+C2+1	4	1+C2+1	4	1+C2+1	4	1+C2+1	2	1+C2+1	3	1+C2+1	4	1+C2+1	4	1+C2+1	4
	48"	23.397	1+C2+1	2	1+C2+1	3	1+C2+1	4	1+C2+1	4	1+C2+1	4	1+C2+1	2	1+C2+1	3	1+C2+1	4	1+C2+1	4	1+C2+1	4
	60"	29.397	2+C2+2	2	2+C2+2	3	2+C2+2	4	2+C2+2	4	2+C2+2	4	2+C2+2	2	2+C2+2	3	2+C2+2	4	2+C2+2	4	2+C2+2	4
	75"	36.897	2+C2+2	2	2+C2+2	3	2+C2+2	4	2+C2+2	4	2+C2+2	4	2+C2+2	2	2+C2+2	3	2+C2+2	4	2+C2+2	4	2+C2+2	4

SEE TABLE 10 FOR DESIGN PRESSURE

Max. Anchor O.C. Spacing for "Integral-Fin" Installation	
Anchor Group E	Anchor Group F
2.5"	4"

NOTES:

1) FRAME DIMENSIONS ARE BUCK WIDTH AND BUCK HEIGHT (SEE SHEETS 3-4). SASH SIZE IS AS PER THE FIGURES ON SHEETS 6-8.

2) FOR SIZES NOT SHOWN, ROUND UP TO THE NEXT AVAILABLE WIDTH OR HEIGHT DIMENSION SHOWN ON THE TABLE.

3) SEE SHEET 9 FOR A GUIDE TO USING THESE TABLES.

4)"1/4-1/2-1/4" AND "1/3-1/3-1/3" INDICATE THAT THOSE STANDARD SASH CONFIGURATIONS FALL WITHIN THE SASH WIDTH RANGE IN THE ADJACENT COLUMN. "CUSTOM" INDICATES THAT NO STANDARD SASH CONFIGURATIONS FALL WITHIN THE RANGE

TABLE 16:

Glass Types 2 - 4 / Reinf. Level R4		Sash Width (in)	Anchor Quantities for XO or OX Windows																					
			30" Height		36" Height		48" Height		54" Height		63" Height		72" Height		30" Height		36" Height		48" Height		54" Height		63" Height		72" Height	
			Head & Sill	Jamb	Head & Sill	Jamb	Head & Sill	Jamb	Head & Sill	Jamb	Head & Sill	Jamb	Head & Sill	Jamb	Head & Sill	Jamb	Head & Sill	Jamb	Head & Sill	Jamb	Head & Sill	Jamb	Head & Sill	Jamb	Head & Sill	Jamb
			Anchor Group A												Anchor Group C											
Window Buck Width	25-1/2"	12.147	Not Allowed												1+C2+1	2	1+C2+1	3	1+C2+1	4	1+C3+1	4	1+C3+1	5	1+C4+1	5
	28"	13.397													1+C2+1	2	1+C2+1	3	1+C3+1	4	1+C3+1	4	1+C3+1	5	1+C4+1	5
	36"	17.397													1+C2+1	2	1+C2+1	3	1+C3+1	4	1+C4+1	4	1+C4+1	5	1+C4+1	5
	42"	20.397													1+C2+1	2	1+C2+1	3	1+C3+1	4	1+C4+1	4	1+C4+1	5	1+C4+1	5
	48"	23.397													1+C2+1	2	1+C3+1	3	1+C4+1	4	1+C4+1	4	1+C4+1	5	1+C4+1	5
	60"	29.397													2+C2+2	2	2+C3+2	3	2+C4+2	4	2+C4+2	4	2+C4+2	5	2+C4+2	5
	75"	36.897													2+C2+2	2	2+C3+2	3	2+C4+2	4	2+C4+2	4	2+C4+2	5	2+C4+2	5
			Anchor Group B												Anchor Group D											
Window Buck Width	25-1/2"	12.147	1+C2+1	2	1+C2+1	3	1+C2+1	4	1+C3+1	4	1+C3+1	5	1+C4+1	5	1+C2+1	2	1+C2+1	3	1+C2+1	4	1+C3+1	4	1+C3+1	5	1+C4+1	5
	28"	13.397	1+C2+1	2	1+C2+1	3	1+C3+1	4	1+C3+1	4	1+C3+1	5	1+C4+1	5	1+C2+1	2	1+C2+1	3	1+C3+1	4	1+C3+1	4	1+C3+1	5	1+C4+1	5
	36"	17.397	1+C2+1	2	1+C2+1	3	1+C3+1	4	1+C4+1	4	1+C4+1	5	1+C4+1	5	1+C2+1	2	1+C2+1	3	1+C3+1	4	1+C4+1	4	1+C4+1	5	1+C4+1	5
	42"	20.397	1+C2+1	2	1+C2+1	3	1+C3+1	4	1+C4+1	4	1+C4+1	5	1+C4+1	5	1+C2+1	2	1+C2+1	3	1+C3+1	4	1+C4+1	4	1+C4+1	5	1+C4+1	5
	48"	23.397	1+C2+1	2	1+C3+1	3	1+C4+1	4	1+C4+1	4	1+C4+1	5	1+C4+1	5	1+C2+1	2	1+C3+1	3	1+C4+1	4	1+C4+1	4	1+C4+1	5	1+C4+1	5
	60"	29.397	2+C2+2	2	2+C3+2	3	2+C4+2	4	2+C4+2	4	2+C4+2	5	2+C4+2	5	2+C2+2	2	2+C3+2	3	2+C4+2	4	2+C4+2	4	2+C4+2	5	2+C4+2	5
	75"	36.897	2+C2+2	2	2+C3+2	3	2+C4+2	4	2+C4+2	4	2+C4+2	5	2+C4+2	5	2+C2+2	2	2+C3+2	3	2+C4+2	4	2+C4+2	4	2+C4+2	5	2+C4+2	5

Max. Anchor O.C. Spacing for "Integral-Fin"
Anchor Group F
3.1"

SEE TABLE 11 FOR DESIGN PRESSURE

MINIMUM ANCHOR QUANTITIES SHOWN. ALL ANCHORAGE MUST ALSO COMPLY WITH THE MAX. O.C. SPACING SHOWN ON THE ELEVATIONS.

PRODUCT REVISED
as complying with the Florida Building Code
NOA-No. 23-0707.09
Expiration Date 09/24/2025
By Ishaq I. Chanda
Miami-Dade Product Control

Revision: D) UPDATED TO 2023 BUILDING CODE.
LY - 06/15/23

PREPARED BY A. LYNN MILLER
1070 TECHNOLOGY DRIVE
N. VENICE, FL 34275
(941) 480-1600
REGISTRATION #29296

PGT Custom Windows and Doors
1070 TECHNOLOGY DRIVE
N. VENICE, FL 34275
(941) 480-1600

Series	Desc.	Sheet	DWG No.	Drawn By	Date	Rev.
HR5410	ANCHOR QUANTITY TABLES	10 OF 15	HR5410-NOA	JENS ROSOWSKI	05/15/15	D

Title: VINYL HORIZONTAL ROLLER WINDOW (NI)

ANTHONY LYNN MILLER
LICENSE
No. 58705
STATE OF FLORIDA
PROFESSIONAL ENGINEER
06/16/23

A. LYNN MILLER, P.E.
P.E.# 58705

TABLE 17:

Glass Type 1 / Reinf. Level R3		Sash Configuration	Sash Width Range (in)	Anchor Quantities for XOX Windows																							
				24" Height		30" Height		36" Height		48" Height		54" Height		63" Height		24" Height		30" Height		36" Height		48" Height		54" Height		63" Height	
				Head & Sill	Jamb	Head & Sill	Jamb	Head & Sill	Jamb	Head & Sill	Jamb	Head & Sill	Jamb	Head & Sill	Jamb	Head & Sill	Jamb	Head & Sill	Jamb	Head & Sill	Jamb	Head & Sill	Jamb	Head & Sill	Jamb	Head & Sill	Jamb
				Anchor Group A												Anchor Group C											
Window Buck Width	35-1/4"	⅓-⅓-⅓	11.391 - 11.391	1+C2+0+C2+1	2	1+C2+0+C2+1	2	1+C2+0+C2+1	3	1+C2+0+C2+1	4	1+C2+0+C2+1	4	1+C2+0+C2+1	4	1+C2+0+C2+1	2	1+C2+0+C2+1	2	1+C2+0+C2+1	3	1+C2+0+C2+1	4	1+C2+0+C2+1	4	1+C2+0+C2+1	4
	38"	⅓-⅓-⅓	12.308 - 12.308	1+C2+0+C2+1	2	1+C2+0+C2+1	2	1+C2+0+C2+1	3	1+C2+0+C2+1	4	1+C2+0+C2+1	4	1+C3+0+C3+1	4	1+C2+0+C2+1	2	1+C2+0+C2+1	2	1+C2+0+C2+1	3	1+C2+0+C2+1	4	1+C2+0+C2+1	4	1+C3+0+C3+1	4
	45-1/8"	¼-½-¼	11.391 - 13.397	1+C2+0+C2+1	2	1+C2+0+C2+1	2	1+C2+0+C2+1	3	1+C3+0+C3+1	4	1+C3+0+C3+1	4	1+C3+0+C3+1	4	1+C2+0+C2+1	2	1+C2+0+C2+1	2	1+C2+0+C2+1	3	1+C3+0+C3+1	4	1+C3+0+C3+1	4	1+C3+0+C3+1	4
		⅓-⅓-⅓	13.398 - 14.683	1+C2+0+C2+1	2	1+C2+0+C2+1	2	1+C2+0+C2+1	3	1+C3+0+C3+1	4	1+C3+0+C3+1	4	1+C3+0+C3+1	4	1+C2+0+C2+1	2	1+C2+0+C2+1	2	1+C2+0+C2+1	3	1+C3+0+C3+1	4	1+C3+0+C3+1	4	1+C3+0+C3+1	4
	47-3/4"	¼-½-¼	11.391 - 12.297	1+C2+0+C2+1	2	1+C2+0+C2+1	2	1+C2+0+C2+1	3	1+C3+0+C3+1	4	1+C3+0+C3+1	4	1+C3+0+C3+1	4	1+C2+0+C2+1	2	1+C2+0+C2+1	2	1+C2+0+C2+1	3	1+C3+0+C3+1	4	1+C3+0+C3+1	4	1+C3+0+C3+1	4
		⅓-⅓-⅓	12.298 - 15.558	1+C2+0+C2+1	2	1+C2+0+C2+1	2	1+C2+0+C2+1	3	1+C3+0+C3+1	4	1+C3+0+C3+1	4	1+C3+0+C3+1	4	1+C2+0+C2+1	2	1+C2+0+C2+1	2	1+C2+0+C2+1	3	1+C3+0+C3+1	4	1+C3+0+C3+1	4	1+C3+0+C3+1	4
	52-1/8"	Custom	11.391 - 12.016	1+C2+2+C2+1	2	1+C2+2+C2+1	2	1+C2+2+C2+1	3	1+C2+1+C2+1	4	1+C2+1+C2+1	4	1+C2+1+C2+1	4	1+C2+1+C2+1	2	1+C2+1+C2+1	2	1+C2+1+C2+1	3	1+C2+1+C2+1	4	1+C2+1+C2+1	4	1+C2+1+C2+1	4
		¼-½-¼	12.017 - 13.397	1+C2+0+C2+1	2	1+C2+0+C2+1	2	1+C3+0+C3+1	3	1+C3+0+C3+1	4	1+C3+0+C3+1	4	1+C3+0+C3+1	4	1+C2+0+C2+1	2	1+C2+0+C2+1	2	1+C3+0+C3+1	3	1+C3+0+C3+1	4	1+C3+0+C3+1	4	1+C3+0+C3+1	4
		⅓-⅓-⅓	13.398 - 17.016	1+C2+0+C2+1	2	1+C2+0+C2+1	2	1+C3+0+C3+1	3	1+C3+0+C3+1	4	1+C3+0+C3+1	4	1+C3+0+C3+1	4	1+C2+0+C2+1	2	1+C2+0+C2+1	2	1+C3+0+C3+1	3	1+C3+0+C3+1	4	1+C3+0+C3+1	4	1+C3+0+C3+1	4
	60"	Custom	11.391 - 13.397	1+C2+2+C2+1	2	1+C2+2+C2+1	2	1+C2+2+C2+1	3	1+C2+2+C2+1	4	1+C3+2+C3+1	4	1+C3+1+C3+1	4	1+C2+2+C2+1	2	1+C2+2+C2+1	2	1+C2+2+C2+1	3	1+C2+1+C2+1	4	1+C3+1+C3+1	4	1+C3+1+C3+1	4
		¼-½-¼	13.398 - 15.360	1+C2+2+C2+1	2	1+C2+2+C2+1	2	1+C2+2+C2+1	3	1+C3+2+C3+1	4	1+C3+1+C3+1	4	1+C3+1+C3+1	4	1+C2+1+C2+1	2	1+C2+1+C2+1	2	1+C2+1+C2+1	3	1+C3+1+C3+1	4	1+C3+1+C3+1	4	1+C3+1+C3+1	4
		⅓-⅓-⅓	15.361 - 19.641	1+C2+0+C2+1	2	1+C2+0+C2+1	2	1+C3+0+C3+1	3	1+C3+0+C3+1	4	1+C3+0+C3+1	4	1+C3+0+C3+1	4	1+C2+0+C2+1	2	1+C2+0+C2+1	2	1+C3+0+C3+1	3	1+C3+0+C3+1	4	1+C3+0+C3+1	4	1+C3+0+C3+1	4
	75"	¼-½-¼	17.141 - 19.110	1+C2+2+C2+1	2	1+C2+2+C2+1	2	1+C2+2+C2+1	3	1+C2+2+C2+1	4	1+C3+2+C3+1	4	1+C3+2+C3+1	4	1+C2+2+C2+1	2	1+C2+2+C2+1	2	1+C2+2+C2+1	3	1+C2+1+C2+1	4	1+C3+1+C3+1	4	1+C3+1+C3+1	4
		⅓-⅓-⅓	19.111 - 24.641	1+C2+0+C2+1	2	1+C3+0+C3+1	2	1+C3+0+C3+1	3	1+C3+0+C3+1	4	1+C4+0+C4+1	4	1+C4+0+C4+1	4	1+C2+0+C2+1	2	1+C3+0+C3+1	2	1+C3+0+C3+1	3	1+C3+0+C3+1	4	1+C4+0+C4+1	4	1+C4+0+C4+1	4
	96"	⅓-⅓-⅓	27.641 - 32.516	2+C2+2+C2+2	2	2+C2+2+C2+2	2	2+C2+2+C2+2	3	2+C3+2+C3+2	4	1+C3+2+C3+1	4	1+C3+2+C3+1	4	1+C2+2+C2+1	2	1+C2+2+C2+1	2	1+C2+2+C2+1	3	1+C3+1+C3+1	4	1+C3+1+C3+1	4	1+C3+1+C3+1	4
		Custom	32.517 - 39.641	2+C2+0+C2+2	2	2+C3+0+C3+2	2	2+C3+0+C3+2	3	2+C3+0+C3+2	4	2+C3+0+C3+2	4	2+C3+0+C3+2	4	2+C2+0+C2+2	2	2+C3+0+C3+2	2	2+C3+0+C3+2	3	2+C3+0+C3+2	4	2+C3+0+C3+2	4	2+C3+0+C3+2	4
	120"	⅓-⅓-⅓	** - 39.641	2+C2+2+C2+2	2	3+C2+2+C2+3	2	2+C2+2+C2+3	3	2+C3+2+C3+2	4	2+C3+2+C3+2	4	2+C3+2+C3+2	4	2+C2+2+C2+2	2	2+C2+2+C2+2	2	2+C2+2+C2+2	3	2+C3+2+C3+2	4	2+C3+2+C3+2	4	2+C3+2+C3+2	4
				Anchor Group B												Anchor Group D											
Window Buck Width	35-1/4"	⅓-⅓-⅓	11.391 - 11.391	1+C2+0+C2+1	2	1+C2+0+C2+1	2	1+C2+0+C2+1	3	1+C2+0+C2+1	4	1+C2+0+C2+1	4	1+C2+0+C2+1	4	1+C2+0+C2+1	2	1+C2+0+C2+1	2	1+C2+0+C2+1	3	1+C2+0+C2+1	4	1+C2+0+C2+1	4	1+C2+0+C2+1	4
	38"	⅓-⅓-⅓	12.308 - 12.308	1+C2+0+C2+1	2	1+C2+0+C2+1	2	1+C2+0+C2+1	3	1+C2+0+C2+1	4	1+C2+0+C2+1	4	1+C3+0+C3+1	4	1+C2+0+C2+1	2	1+C2+0+C2+1	2	1+C2+0+C2+1	3	1+C2+0+C2+1	4	1+C2+0+C2+1	4	1+C3+0+C3+1	4
	45-1/8"	¼-½-¼	11.391 - 13.397	1+C2+0+C2+1	2	1+C2+0+C2+1	2	1+C2+0+C2+1	3	1+C3+0+C3+1	4	1+C3+0+C3+1	4	1+C3+0+C3+1	4	1+C2+0+C2+1	2	1+C2+0+C2+1	2	1+C2+0+C2+1	3	1+C3+0+C3+1	4	1+C3+0+C3+1	4	1+C3+0+C3+1	4
		⅓-⅓-⅓	13.398 - 14.683	1+C2+0+C2+1	2	1+C2+0+C2+1	2	1+C2+0+C2+1	3	1+C3+0+C3+1	4	1+C3+0+C3+1	4	1+C3+0+C3+1	4	1+C2+0+C2+1	2	1+C2+0+C2+1	2	1+C2+0+C2+1	3	1+C3+0+C3+1	4	1+C3+0+C3+1	4	1+C3+0+C3+1	4
	47-3/4"	¼-½-¼	11.391 - 12.297	1+C2+0+C2+1	2	1+C2+0+C2+1	2	1+C2+0+C2+1	3	1+C3+0+C3+1	4	1+C3+0+C3+1	4	1+C3+0+C3+1	4	1+C2+0+C2+1	2	1+C2+0+C2+1	2	1+C2+0+C2+1	3	1+C3+0+C3+1	4	1+C3+0+C3+1	4	1+C3+0+C3+1	4
		⅓-⅓-⅓	12.298 - 15.558	1+C2+0+C2+1	2	1+C2+0+C2+1	2	1+C2+0+C2+1	3	1+C3+0+C3+1	4	1+C3+0+C3+1	4	1+C3+0+C3+1	4	1+C2+0+C2+1	2	1+C2+0+C2+1	2	1+C2+0+C2+1	3	1+C3+0+C3+1	4	1+C3+0+C3+1	4	1+C3+0+C3+1	4
	52-1/8"	Custom	11.391 - 12.016	1+C2+1+C2+1	2	1+C2+1+C2+1	2	1+C2+1+C2+1	3	1+C2+1+C2+1	4	1+C2+1+C2+1	4	1+C2+1+C2+1	4	1+C2+1+C2+1	2	1+C2+1+C2+1	2	1+C2+1+C2+1	3	1+C2+1+C2+1	4	1+C2+1+C2+1	4	1+C2+1+C2+1	4
		¼-½-¼	12.017 - 13.397	1+C2+0+C2+1	2	1+C2+0+C2+1	2	1+C3+0+C3+1	3	1+C3+0+C3+1	4	1+C3+0+C3+1	4	1+C3+0+C3+1	4	1+C2+0+C2+1	2	1+C2+0+C2+1	2	1+C3+0+C3+1	3	1+C3+0+C3+1	4	1+C3+0+C3+1	4	1+C3+0+C3+1	4
		⅓-⅓-⅓	13.398 - 17.016	1+C2+0+C2+1	2	1+C2+0+C2+1	2	1+C3+0+C3+1	3	1+C3+0+C3+1	4	1+C3+0+C3+1	4	1+C3+0+C3+1	4	1+C2+0+C2+1	2	1+C2+0+C2+1	2	1+C3+0+C3+1	3	1+C3+0+C3+1	4	1+C3+0+C3+1	4	1+C3+0+C3+1	4
	60"	Custom	11.391 - 13.397	1+C2+2+C2+1	2	1+C2+2+C2+1	2	1+C2+2+C2+1	3	1+C2+1+C2+1	4	1+C3+1+C3+1	4	1+C3+1+C3+1	4	1+C2+1+C2+1	2	1+C2+2+C2+1	2	1+C2+2+C2+1	3	1+C2+1+C2+1	4	1+C3+1+C3+1	4	1+C3+1+C3+1	4
		¼-½-¼	13.398 - 15.360	1+C2+1+C2+1	2	1+C2+2+C2+1	2	1+C2+2+C2+1	3	1+C3+1+C3+1	4	1+C3+1+C3+1	4	1+C3+1+C3+1	4	1+C2+1+C2+1	2	1+C2+1+C2+1	2	1+C2+1+C2+1	3	1+C3+1+C3+1	4	1+C3+1+C3+1	4	1+C3+1+C3+1	4
		⅓-⅓-⅓	15.361 - 19.641	1+C2+0+C2+1	2	1+C2+0+C2+1	2	1+C3+0+C3+1	3	1+C3+0+C3+1	4	1+C3+0+C3+1	4	1+C3+0+C3+1	4	1+C2+0+C2+1	2	1+C2+0+C2+1	2	1+C3+0+C3+1	3	1+C3+0+C3+1	4	1+C3+0+C3+1	4	1+C3+0+C3+1	4
	75"	¼-½-¼	17.141 - 19.110	1+C2+2+C2+1	2	1+C2+2+C2+1	2	1+C2+2+C2+1	3	1+C2+2+C2+1	4	1+C3+1+C3+1	4	1+C3+1+C3+1	4	1+C2+2+C2+1	2	1+C2+2+C2+1	2	1+C2+2+C2+1	3	1+C2+1+C2+1	4	1+C3+1+C3+1	4	1+C3+1+C3+1	4
		⅓-⅓-⅓	19.111 - 24.641	1+C2+0+C2+1	2	1+C3+0+C3+1	2	1+C3+0+C3+1	3	1+C3+0+C3+1	4	1+C4+0+C4+1	4	1+C4+0+C4+1	4	1+C2+0+C2+1	2	1+C3+0+C3+1	2	1+C3+0+C3+1	3	1+C3+0+C3+1	4	1+C4+0+C4+1	4	1+C4+0+C4+1	4
	96"	⅓-⅓-⅓	27.641 - 32.516	2+C2+2+C2+2	2	2+C2+2+C2+2	2	1+C2+2+C2+2	3	1+C3+2+C3+1	4	1+C3+1+C3+1	4	1+C3+1+C3+1	4	1+C2+2+C2+1	2	1+C2+2+C2+1	2	1+C2+2+C2+1	3	1+C3+1+C3+1	4	1+C3+1+C3+1	4	1+C3+1+C3+1	4
		Custom	32.517 - 39.641	2+C2+0+C2+2	2	2+C3+0+C3+2	2	2+C3+0+C3+2	3	2+C3+0+C3+2	4	2+C3+0+C3+2	4	2+C3+0+C3+2	4	2+C2+0+C2+2	2	2+C3+0+C3+2	2	2+C3+0+C3+2	3	2+C3+0+C3+2	4	2+C3+0+C3+2	4	2+C3+0+C3+2	4
	120"	⅓-⅓-⅓	** - 39.641	2+C2+2+C2+2	2	2+C2+2+C2+2	2	2+C2+2+C2+2	3	2+C3+2+C3+2	4	2+C3+2+C3+2	4	2+C3+2+C3+2	4	2+C2+2+C2+2	2	2+C2+2+C2+2	2	2+C2+2+C2+2	3	2+C3+2+C3+2	4	2+C3+2+C3+2	4	2+C3+2+C3+2	4

SEE TABLE 8 FOR DESIGN PRESSURE

** MIN. SASH SIZE = $\frac{\text{WINDOW WIDTH - 40.72}}{2}$

Max. Anchor O.C. Spacing for "Integral-Fin" Installation	Anchor Group E	Anchor Group F
	2.3"	4"

NOTES:
1) USE THESE TABLES FOR ALL WINDOWS INSTALLED THROUGH THE FRAME OR INTEGRAL FIN.
2) FRAME DIMENSIONS ARE BUCK WIDTH AND BUCK HEIGHT (SEE SHEETS 3-4). SASH SIZE IS AS PER THE FIGURE.
3) FOR SIZES NOT SHOWN, ROUND UP TO THE NEXT AVAILABLE WIDTH OR HEIGHT DIMENSION SHOWN ON THE TABLE.
4) "1/4-1/2-1/4" AND "1/3-1/3-1/3" INDICATE THAT THOSE STANDARD SASH CONFIGURATIONS FALL WITHIN THE SASH WIDTH RANGE IN THE ADJACENT COLUMN. "CUSTOM" INDICATES THAT NO STANDARD SASH CONFIGURATIONS FALL WITHIN THE RANGE.

MINIMUM ANCHOR QUANTITIES SHOWN. ALL ANCHORAGE MUST ALSO COMPLY WITH THE MAX. O.C. SPACING SHOWN ON THE ELEVATIONS.

PRODUCT REVISED
as complying with the Florida Building Code
NOA-No. 23-0707.09
Expiration Date 09/24/2025
By Ishaq I. Chanda
Miami-Dade Product Control

Revision: D) UPDATED TO 2023 BUILDING CODE.
LY - 06/15/23

PREPARED BY A. LYNN MILLER
1070 TECHNOLOGY DRIVE
N. VENICE, FL 34275
(941) 480-1600
REGISTRATION #29296

PGT Custom Windows and Doors
1070 TECHNOLOGY DRIVE
N. VENICE, FL 34275
(941) 480-1600

Series	Desc.	Title	Sheet	DWG No.	Drawn By	Date	Rev.
HR5410	ANCHOR QUANTITY TABLES	VINYL HORIZONTAL ROLLER WINDOW (NI)	11 OF 15	HR5410-NOA	JENS ROSOWSKI	05/15/15	D

ANTHONY LYNN MILLER
LICENSE
No. 58705
STATE OF FLORIDA
PROFESSIONAL ENGINEER
06/16/23

A. LYNN MILLER, P.E.
P.E.# 58705

TABLE 18:

MINIMUM ANCHOR QUANTITIES SHOWN. ALL ANCHORAGE MUST ALSO COMPLY WITH THE MAX. O.C. SPACING SHOWN ON THE ELEVATIONS.

Anchor Quantities for XOX Windows

Glass Types 2 - 4 / Reinf. Level R3		Sash Configuration	Sash Width Range (in)	24" Height Head & Sill	24" Height Jamb	30" Height Head & Sill	30" Height Jamb	36" Height Head & Sill	36" Height Jamb	48" Height Head & Sill	48" Height Jamb	54" Height Head & Sill	54" Height Jamb	63" Height Head & Sill	63" Height Jamb
				Anchor Group A											
Window Buck Width	35-1/4"	⅓-⅓-⅓	11.391 - 11.391	1+C2+0+C2+1	2	1+C2+0+C2+1	2	1+C2+0+C2+1	3	1+C2+0+C2+1	4	1+C2+0+C2+1	4	1+C2+0+C2+1	4
	38"	⅓-⅓-⅓	12.308 - 12.308	1+C2+0+C2+1	2	1+C2+0+C2+1	2	1+C2+0+C2+1	3	1+C2+0+C2+1	4	1+C2+0+C2+1	4	1+C3+0+C3+1	4
	45-1/8"	¼-½-¼	11.391 - 13.397	1+C2+0+C2+1	2	1+C2+0+C2+1	2	1+C2+0+C2+1	3	1+C3+0+C3+1	4	1+C3+0+C3+1	4	1+C4+0+C4+1	4
		⅓-⅓-⅓	13.398 - 14.683	1+C2+0+C2+1	2	1+C2+0+C2+1	2	1+C2+0+C2+1	3	1+C3+0+C3+1	4	1+C3+0+C3+1	4	1+C3+0+C3+1	4
	47-3/4"	¼-½-¼	11.391 - 12.297	1+C2+0+C2+1	2	1+C2+0+C2+1	2	1+C2+0+C2+1	3	1+C3+0+C3+1	4	1+C3+0+C3+1	4	1+C4+0+C4+1	4
		⅓-⅓-⅓	12.298 - 15.558	1+C2+0+C2+1	2	1+C2+0+C2+1	2	1+C2+0+C2+1	3	1+C3+0+C3+1	4	1+C3+0+C3+1	4	1+C3+0+C3+1	4
	52-1/8"	Custom	11.391 - 12.016	1+C2+0+C2+1	2	1+C2+0+C2+1	2	1+C3+0+C3+1	3	1+C3+0+C3+1	4	1+C4+0+C4+1	4	1+C4+0+C4+1	4
		¼-½-¼	12.017 - 13.397	1+C2+0+C2+1	2	1+C2+0+C2+1	2	1+C3+0+C3+1	3	1+C3+0+C3+1	4	1+C4+0+C4+1	4	1+C4+0+C4+1	4
		⅓-⅓-⅓	13.398 - 17.016	1+C2+0+C2+1	2	1+C2+0+C2+1	2	1+C3+0+C3+1	3	1+C3+0+C3+1	4	1+C4+0+C4+1	4	1+C4+0+C4+1	4
	60"	Custom	11.391 - 13.397	1+C2+2+C2+1	2	1+C2+2+C2+1	2	1+C2+2+C2+1	3	1+C3+2+C3+1	4	1+C3+2+C3+1	4	1+C3+2+C3+1	4
		¼-½-¼	13.398 - 15.360	1+C2+2+C2+1	2	1+C2+2+C2+1	2	1+C2+2+C2+1	3	1+C3+2+C3+1	4	1+C3+2+C3+1	4	1+C3+2+C3+1	4
		⅓-⅓-⅓	15.361 - 19.641	1+C2+0+C2+1	2	1+C2+0+C2+1	2	1+C3+0+C3+1	3	1+C4+0+C4+1	4	1+C4+0+C4+1	4	1+C4+0+C4+1	4
	75"	Custom	11.391 - 13.397	1+C2+3+C2+1	2	1+C2+3+C2+1	2	1+C2+4+C2+1	3	1+C3+4+C3+1	4	1+C3+4+C3+1	4	1+C3+3+C3+1	4
		¼-½-¼	13.398 - 19.110	1+C2+3+C2+1	2	1+C2+3+C2+1	2	1+C2+3+C2+1	3	1+C3+3+C3+1	4	1+C3+3+C3+1	4	1+C3+2+C3+1	4
		⅓-⅓-⅓	19.111 - 24.641	1+C2+0+C2+1	2	1+C3+0+C3+1	2	1+C3+0+C3+1	3	1+C4+0+C4+1	4	1+C4+0+C4+1	4	1+C4+0+C4+1	4
	96"	Custom	17.641 - 19.397	1+C2+4+C2+1	2	1+C2+4+C2+1	2	1+C2+4+C2+1	3	1+C3+4+C3+1	4	1+C3+4+C3+1	4	1+C3+3+C3+1	4
		¼-½-¼	19.398 - 24.360	1+C2+3+C2+1	2	1+C2+4+C2+1	2	1+C2+4+C2+1	3	1+C3+4+C3+1	4	1+C3+4+C3+1	4	1+C3+3+C3+1	4
		⅓-⅓-⅓	24.361 - 31.641	2+C2+3+C2+2	2	2+C2+3+C2+2	2	2+C2+3+C2+2	3	2+C3+3+C3+2	4	1+C3+2+C3+1	4	1+C3+2+C3+1	4
	120"	¼-½-¼	29.641 - 32.515	2+C2+4+C2+2	2	2+C2+4+C2+2	2	2+C2+4+C2+2	3	2+C3+4+C3+2	4	2+C3+4+C3+2	4	2+C3+3+C3+2	4
		⅓-⅓-⅓	32.516 - 39.641	2+C2+3+C2+2	2	3+C2+4+C2+3	2	3+C2+4+C2+3	3	2+C3+4+C3+2	4	2+C3+3+C3+2	4	2+C3+2+C3+2	4
	140"	Custom	** - 39.641	2+C2+4+C2+2	2	3+C2+4+C2+3	2	2+C2+4+C2+3	3	2+C3+4+C3+2	4	2+C3+4+C3+2	4	2+C3+3+C3+2	4
				Anchor Group B											
Window Buck Width	35-1/4"	⅓-⅓-⅓	11.391 - 11.391	1+C2+0+C2+1	2	1+C2+0+C2+1	2	1+C2+0+C2+1	3	1+C2+0+C2+1	4	1+C2+0+C2+1	4	1+C2+0+C2+1	4
	38"	⅓-⅓-⅓	12.308 - 12.308	1+C2+0+C2+1	2	1+C2+0+C2+1	2	1+C2+0+C2+1	3	1+C2+0+C2+1	4	1+C2+0+C2+1	4	1+C3+0+C3+1	4
	45-1/8"	¼-½-¼	11.391 - 13.397	1+C2+0+C2+1	2	1+C2+0+C2+1	2	1+C2+0+C2+1	3	1+C3+0+C3+1	4	1+C3+0+C3+1	4	1+C4+0+C4+1	4
		⅓-⅓-⅓	13.398 - 14.683	1+C2+0+C2+1	2	1+C2+0+C2+1	2	1+C2+0+C2+1	3	1+C3+0+C3+1	4	1+C3+0+C3+1	4	1+C3+0+C3+1	4
	47-3/4"	¼-½-¼	11.391 - 12.297	1+C2+0+C2+1	2	1+C2+0+C2+1	2	1+C2+0+C2+1	3	1+C3+0+C3+1	4	1+C3+0+C3+1	4	1+C4+0+C4+1	4
		⅓-⅓-⅓	12.298 - 15.558	1+C2+0+C2+1	2	1+C2+0+C2+1	2	1+C2+0+C2+1	3	1+C3+0+C3+1	4	1+C3+0+C3+1	4	1+C3+0+C3+1	4
	52-1/8"	Custom	11.391 - 12.016	1+C2+0+C2+1	2	1+C2+0+C2+1	2	1+C3+0+C3+1	3	1+C3+0+C3+1	4	1+C4+0+C4+1	4	1+C4+0+C4+1	4
		¼-½-¼	12.017 - 13.397	1+C2+0+C2+1	2	1+C2+0+C2+1	2	1+C3+0+C3+1	3	1+C3+0+C3+1	4	1+C4+0+C4+1	4	1+C4+0+C4+1	4
		⅓-⅓-⅓	13.398 - 17.016	1+C2+0+C2+1	2	1+C2+0+C2+1	2	1+C3+0+C3+1	3	1+C3+0+C3+1	4	1+C4+0+C4+1	4	1+C4+0+C4+1	4
	60"	Custom	11.391 - 13.397	1+C2+2+C2+1	2	1+C2+2+C2+1	2	1+C2+2+C2+1	3	1+C3+2+C3+1	4	1+C3+2+C3+1	4	1+C3+2+C3+1	4
		¼-½-¼	13.398 - 15.360	1+C2+1+C2+1	2	1+C2+2+C2+1	2	1+C2+2+C2+1	3	1+C3+2+C3+1	4	1+C3+1+C3+1	4	1+C3+1+C3+1	4
		⅓-⅓-⅓	15.361 - 19.641	1+C2+0+C2+1	2	1+C2+0+C2+1	2	1+C3+0+C3+1	3	1+C4+0+C4+1	4	1+C4+0+C4+1	4	1+C4+0+C4+1	4
	75"	Custom	11.391 - 13.397	1+C2+2+C2+1	2	1+C2+3+C2+1	2	1+C2+3+C2+1	3	1+C3+3+C3+1	4	1+C3+3+C3+1	4	1+C3+2+C3+1	4
		¼-½-¼	13.398 - 19.110	1+C2+2+C2+1	2	1+C2+2+C2+1	2	1+C2+3+C2+1	3	1+C3+3+C3+1	4	1+C3+2+C3+1	4	1+C3+2+C3+1	4
		⅓-⅓-⅓	19.111 - 24.641	1+C2+0+C2+1	2	1+C3+0+C3+1	2	1+C3+0+C3+1	3	1+C4+0+C4+1	4	1+C4+0+C4+1	4	1+C4+0+C4+1	4
	96"	Custom	17.641 - 19.397	1+C2+3+C2+1	2	1+C2+3+C2+1	2	1+C2+3+C2+1	3	1+C3+3+C3+1	4	1+C3+3+C3+1	4	1+C3+2+C3+1	4
		¼-½-¼	19.398 - 24.360	1+C2+3+C2+1	2	1+C2+3+C2+1	2	1+C2+3+C2+1	3	1+C3+3+C3+1	4	1+C3+3+C3+1	4	1+C3+2+C3+1	4
		⅓-⅓-⅓	24.361 - 31.641	1+C2+2+C2+1	2	2+C2+2+C2+2	2	2+C2+3+C2+2	3	1+C3+2+C3+1	4	1+C3+2+C3+1	4	1+C3+2+C3+1	4
	120"	¼-½-¼	29.641 - 32.515	2+C2+3+C2+2	2	2+C2+3+C2+2	2	2+C2+3+C2+2	3	2+C3+3+C3+2	4	2+C3+3+C3+2	4	2+C3+2+C3+2	4
		⅓-⅓-⅓	32.516 - 39.641	2+C2+3+C2+2	2	2+C2+3+C2+2	2	2+C2+3+C2+2	3	2+C3+3+C3+2	4	2+C3+2+C3+2	4	2+C3+2+C3+2	4
	140"	Custom	** - 39.641	2+C2+3+C2+2	2	2+C2+3+C2+2	2	2+C2+3+C2+2	3	2+C3+3+C3+2	4	2+C3+3+C3+2	4	2+C3+2+C3+2	4

Glass Types 2 - 4 / Reinf. Level R3		Sash Configuration	Sash Width Range (in)	24" Height Head & Sill	24" Height Jamb	30" Height Head & Sill	30" Height Jamb	36" Height Head & Sill	36" Height Jamb	48" Height Head & Sill	48" Height Jamb	54" Height Head & Sill	54" Height Jamb	63" Height Head & Sill	63" Height Jamb
				Anchor Group C											
Window Buck Width	35-1/4"	⅓-⅓-⅓	11.391 - 11.391	1+C2+0+C2+1	2	1+C2+0+C2+1	2	1+C2+0+C2+1	3	1+C2+0+C2+1	4	1+C2+0+C2+1	4	1+C2+0+C2+1	4
	38"	⅓-⅓-⅓	12.308 - 12.308	1+C2+0+C2+1	2	1+C2+0+C2+1	2	1+C2+0+C2+1	3	1+C2+0+C2+1	4	1+C2+0+C2+1	4	1+C3+0+C3+1	4
	45-1/8"	¼-½-¼	11.391 - 13.397	1+C2+0+C2+1	2	1+C2+0+C2+1	2	1+C2+0+C2+1	3	1+C3+0+C3+1	4	1+C3+0+C3+1	4	1+C4+0+C4+1	4
		⅓-⅓-⅓	13.398 - 14.683	1+C2+0+C2+1	2	1+C2+0+C2+1	2	1+C2+0+C2+1	3	1+C3+0+C3+1	4	1+C3+0+C3+1	4	1+C3+0+C3+1	4
	47-3/4"	¼-½-¼	11.391 - 12.297	1+C2+0+C2+1	2	1+C2+0+C2+1	2	1+C2+0+C2+1	3	1+C3+0+C3+1	4	1+C3+0+C3+1	4	1+C4+0+C4+1	4
		⅓-⅓-⅓	12.298 - 15.558	1+C2+0+C2+1	2	1+C2+0+C2+1	2	1+C2+0+C2+1	3	1+C3+0+C3+1	4	1+C3+0+C3+1	4	1+C3+0+C3+1	4
	52-1/8"	Custom	11.391 - 12.016	1+C2+0+C2+1	2	1+C2+0+C2+1	2	1+C3+0+C3+1	3	1+C3+0+C3+1	4	1+C4+0+C4+1	4	1+C4+0+C4+1	4
		¼-½-¼	12.017 - 13.397	1+C2+0+C2+1	2	1+C2+0+C2+1	2	1+C3+0+C3+1	3	1+C3+0+C3+1	4	1+C4+0+C4+1	4	1+C4+0+C4+1	4
		⅓-⅓-⅓	13.398 - 17.016	1+C2+0+C2+1	2	1+C2+0+C2+1	2	1+C3+0+C3+1	3	1+C3+0+C3+1	4	1+C4+0+C4+1	4	1+C4+0+C4+1	4
	60"	Custom	11.391 - 13.397	1+C2+2+C2+1	2	1+C2+2+C2+1	2	1+C2+2+C2+1	3	1+C3+2+C3+1	4	1+C3+2+C3+1	4	1+C3+2+C3+1	4
		¼-½-¼	13.398 - 15.360	1+C2+1+C2+1	2	1+C2+2+C2+1	2	1+C2+1+C2+1	3	1+C2+1+C2+1	4	1+C3+1+C3+1	4	1+C3+1+C3+1	4
		⅓-⅓-⅓	15.361 - 19.641	1+C2+0+C2+1	2	1+C2+0+C2+1	2	1+C3+0+C3+1	3	1+C4+0+C4+1	4	1+C4+0+C4+1	4	1+C4+0+C4+1	4
	75"	Custom	11.391 - 13.397	1+C2+2+C2+1	2	1+C2+2+C2+1	2	1+C2+3+C2+1	3	1+C3+3+C3+1	4	1+C3+3+C3+1	4	1+C3+2+C3+1	4
		¼-½-¼	13.398 - 19.110	1+C2+2+C2+1	2	1+C2+2+C2+1	2	1+C2+2+C2+1	3	1+C3+2+C3+1	4	1+C3+2+C3+1	4	1+C3+2+C3+1	4
		⅓-⅓-⅓	19.111 - 24.641	1+C2+0+C2+1	2	1+C3+0+C3+1	2	1+C3+0+C3+1	3	1+C4+0+C4+1	4	1+C4+0+C4+1	4	1+C4+0+C4+1	4
	96"	Custom	17.641 - 19.397	1+C2+3+C2+1	2	1+C2+3+C2+1	2	1+C2+3+C2+1	3	1+C3+3+C3+1	4	1+C3+3+C3+1	4	1+C3+2+C3+1	4
		¼-½-¼	19.398 - 24.360	1+C2+2+C2+1	2	1+C2+3+C2+1	2	1+C2+3+C2+1	3	1+C3+3+C3+1	4	1+C3+3+C3+1	4	1+C3+2+C3+1	4
		⅓-⅓-⅓	24.361 - 31.641	1+C2+2+C2+1	2	1+C2+2+C2+1	2	1+C2+2+C2+1	3	1+C3+2+C3+1	4	1+C3+2+C3+1	4	1+C3+2+C3+1	4
	120"	¼-½-¼	29.641 - 32.515	2+C2+3+C2+2	2	2+C2+3+C2+2	2	2+C2+3+C2+2	3	2+C3+3+C3+2	4	2+C3+3+C3+2	4	2+C3+2+C3+2	4
		⅓-⅓-⅓	32.516 - 39.641	2+C2+3+C2+2	2	2+C2+3+C2+2	2	2+C2+3+C2+2	3	2+C3+3+C3+2	4	2+C3+2+C3+2	4	2+C3+2+C3+2	4
	140"	Custom	** - 39.641	2+C2+3+C2+2	2	2+C2+3+C2+2	2	2+C2+3+C2+2	3	2+C3+3+C3+2	4	2+C3+3+C3+2	4	2+C3+2+C3+2	4
				Anchor Group D											
Window Buck Width	35-1/4"	⅓-⅓-⅓	11.391 - 11.391	1+C2+0+C2+1	2	1+C2+0+C2+1	2	1+C2+0+C2+1	3	1+C2+0+C2+1	4	1+C2+0+C2+1	4	1+C2+0+C2+1	4
	38"	⅓-⅓-⅓	12.308 - 12.308	1+C2+0+C2+1	2	1+C2+0+C2+1	2	1+C2+0+C2+1	3	1+C2+0+C2+1	4	1+C2+0+C2+1	4	1+C3+0+C3+1	4
	45-1/8"	¼-½-¼	11.391 - 13.397	1+C2+0+C2+1	2	1+C2+0+C2+1	2	1+C2+0+C2+1	3	1+C3+0+C3+1	4	1+C3+0+C3+1	4	1+C4+0+C4+1	4
		⅓-⅓-⅓	13.398 - 14.683	1+C2+0+C2+1	2	1+C2+0+C2+1	2	1+C2+0+C2+1	3	1+C3+0+C3+1	4	1+C3+0+C3+1	4	1+C3+0+C3+1	4
	47-3/4"	¼-½-¼	11.391 - 12.297	1+C2+0+C2+1	2	1+C2+0+C2+1	2	1+C2+0+C2+1	3	1+C3+0+C3+1	4	1+C3+0+C3+1	4	1+C4+0+C4+1	4
		⅓-⅓-⅓	12.298 - 15.558	1+C2+0+C2+1	2	1+C2+0+C2+1	2	1+C2+0+C2+1	3	1+C3+0+C3+1	4	1+C3+0+C3+1	4	1+C3+0+C3+1	4
	52-1/8"	Custom	11.391 - 12.016	1+C2+0+C2+1	2	1+C2+0+C2+1	2	1+C3+0+C3+1	3	1+C3+0+C3+1	4	1+C4+0+C4+1	4	1+C4+0+C4+1	4
		¼-½-¼	12.017 - 13.397	1+C2+0+C2+1	2	1+C2+0+C2+1	2	1+C3+0+C3+1	3	1+C3+0+C3+1	4	1+C4+0+C4+1	4	1+C4+0+C4+1	4
		⅓-⅓-⅓	13.398 - 17.016	1+C2+0+C2+1	2	1+C2+0+C2+1	2	1+C3+0+C3+1	3	1+C3+0+C3+1	4	1+C4+0+C4+1	4	1+C4+0+C4+1	4
	60"	Custom	11.391 - 13.397	1+C2+2+C2+1	2	1+C2+2+C2+1	2	1+C2+2+C2+1	3	1+C3+2+C3+1	4	1+C3+2+C3+1	4	1+C3+2+C3+1	4
		¼-½-¼	13.398 - 15.360	1+C2+1+C2+1	2	1+C2+2+C2+1	2	1+C2+1+C2+1	3	1+C2+1+C2+1	4	1+C3+1+C3+1	4	1+C3+1+C3+1	4
		⅓-⅓-⅓	15.361 - 19.641	1+C2+0+C2+1	2	1+C2+0+C2+1	2	1+C3+0+C3+1	3	1+C4+0+C4+1	4	1+C4+0+C4+1	4	1+C4+0+C4+1	4
	75"	Custom	11.391 - 13.397	1+C2+2+C2+1	2	1+C2+2+C2+1	2	1+C2+2+C2+1	3	1+C3+3+C3+1	4	1+C3+3+C3+1	4	1+C3+2+C3+1	4
		¼-½-¼	13.398 - 19.110	1+C2+2+C2+1	2	1+C2+2+C2+1	2	1+C2+2+C2+1	3	1+C3+2+C3+1	4	1+C3+2+C3+1	4	1+C3+2+C3+1	4
		⅓-⅓-⅓	19.111 - 24.641	1+C2+0+C2+1	2	1+C3+0+C3+1	2	1+C3+0+C3+1	3	1+C4+0+C4+1	4	1+C4+0+C4+1	4	1+C4+0+C4+1	4
	96"	Custom	17.641 - 19.397	1+C2+3+C2+1	2	1+C2+3+C2+1	2	1+C2+3+C2+1	3	1+C3+3+C3+1	4	1+C3+3+C3+1	4	1+C3+2+C3+1	4
		¼-½-¼	19.398 - 24.360	1+C2+2+C2+1	2	1+C2+3+C2+1	2	1+C2+3+C2+1	3	1+C3+3+C3+1	4	1+C3+3+C3+1	4	1+C3+2+C3+1	4
		⅓-⅓-⅓	24.361 - 31.641	1+C2+2+C2+1	2	1+C2+2+C2+1	2	1+C2+2+C2+1	3	1+C3+2+C3+1	4	1+C3+2+C3+1	4	1+C3+1+C3+1	4
	120"	¼-½-¼	29.641 - 32.515	2+C2+2+C2+2	2	2+C2+3+C2+2	2	2+C2+3+C2+2	3	2+C3+3+C3+2	4	2+C3+3+C3+2	4	2+C3+2+C3+2	4
		⅓-⅓-⅓	32.516 - 39.641	2+C2+2+C2+2	2	2+C2+3+C2+2	2	2+C2+3+C2+2	3	2+C3+3+C3+2	4	2+C3+2+C3+2	4	2+C3+2+C3+2	4
	140"	Custom	** - 39.641	2+C2+2+C2+2	2	2+C2+3+C2+2	2	2+C2+3+C2+2	3	2+C3+3+C3+2	4	2+C3+3+C3+2	4	2+C3+2+C3+2	4

SEE TABLE 9 FOR DESIGN PRESSURE

Max. Anchor O.C. Spacing for "Integral-Fin" Installation	Anchor Group E	Anchor Group F
	2"	3.7"

** MIN. SASH SIZE = $\frac{\text{WINDOW WIDTH - 60.72}}{2}$

NOTES:
1) USE THESE TABLES FOR ALL WINDOWS INSTALLED THROUGH THE FRAME OR INTEGRAL FIN.
2) FRAME DIMENSIONS ARE BUCK WIDTH AND BUCK HEIGHT (SEE SHEETS 3-4). SASH SIZE IS AS PER THE FIGURE.
3) FOR SIZES NOT SHOWN, ROUND UP TO THE NEXT AVAILABLE WIDTH OR HEIGHT DIMENSION SHOWN ON THE TABLE.
4) "1/4-1/2-1/4" AND "1/3-1/3-1/3" INDICATE THAT THOSE STANDARD SASH CONFIGURATIONS FALL WITHIN THE SASH WIDTH RANGE IN THE ADJACENT COLUMN. "CUSTOM" INDICATES THAT NO STANDARD SASH CONFIGURATIONS FALL WITHIN THE RANGE.

PRODUCT REVISED
as complying with the Florida Building Code
NOA-No. 23-0707.09
Expiration Date 09/24/2025
By Ishaq I. Chanda
Miami-Dade Product Control

Revision:
D) UPDATED TO 2023 BUILDING CODE.
LY - 06/15/23

PREPARED BY A. LYNN MILLER
1070 TECHNOLOGY DRIVE
N. VENICE, FL 34275
(941) 480-1600
REGISTRATION #29296

PGT Custom Windows and Doors
1070 TECHNOLOGY DRIVE
N. VENICE, FL 34275
(941) 480-1600

Series	Sheet	DWG No.	Drawn By	Date	Rev.
HR5410	12 OF 15	HR5410-NOA	JENS ROSOWSKI	05/15/15	D

Title: VINYL HORIZONTAL ROLLER WINDOW (NI)
Desc.: ANCHOR QUANTITY TABLES

ANTHONY LYNN MILLER
LICENSE
No. 58705
STATE OF FLORIDA
PROFESSIONAL ENGINEER
06/16/23
A. LYNN MILLER, P.E.
P.E.# 58705

TABLE 19:

MINIMUM ANCHOR QUANTITIES SHOWN. ALL ANCHORAGE MUST ALSO COMPLY WITH THE MAX. O.C. SPACING SHOWN ON THE ELEVATIONS.

Anchor Quantities for XOX Windows

Glass Types 2 - 4 / Reinf. Level R4	Sash Configuration	Sash Width Range (in)	24" Height Head & Sill	24" Height Jamb	30" Height Head & Sill	30" Height Jamb	36" Height Head & Sill	36" Height Jamb	48" Height Head & Sill	48" Height Jamb	54" Height Head & Sill	54" Height Jamb	63" Height Head & Sill	63" Height Jamb
			Anchor Group A											
Window Buck Width 35-1/4"	⅓-⅓-⅓	11.391 - 11.391	Not Allowed											
38"	⅓-⅓-⅓	12.308 - 12.308												
45-1/8"	¼-½-¼	11.391 - 13.397												
	⅓-⅓-⅓	13.398 - 14.683												
47-3/4"	¼-½-¼	11.391 - 12.297												
	⅓-⅓-⅓	12.298 - 15.558												
52-1/8"	Custom	11.391 - 12.016												
	¼-½-¼	12.017 - 13.397												
	⅓-⅓-⅓	13.398 - 17.016												
60"	Custom	11.391 - 13.397												
	¼-½-¼	13.398 - 15.360												
	⅓-⅓-⅓	15.361 - 19.641												
75"	Custom	11.391 - 13.397												
	¼-½-¼	13.398 - 19.110												
	⅓-⅓-⅓	19.111 - 24.641												
96"	Custom	17.641 - 19.397												
	¼-½-¼	19.398 - 24.360												
	⅓-⅓-⅓	24.361 - 31.641												
120"	¼-½-¼	29.641 - 32.515												
	⅓-⅓-⅓	32.516 - 39.641												
140"	Custom	** - 39.641												
			Anchor Group B											
Window Buck Width 35-1/4"	⅓-⅓-⅓	11.391 - 11.391	1+C2+0+C2+1	2	1+C2+0+C2+1	2	1+C2+0+C2+1	3	1+C2+0+C2+1	4	1+C2+0+C2+1	4	1+C2+0+C2+1	4
38"	⅓-⅓-⅓	12.308 - 12.308	1+C2+0+C2+1	2	1+C2+0+C2+1	2	1+C2+0+C2+1	3	1+C3+0+C3+1	4	1+C3+0+C3+1	4	1+C3+0+C3+1	4
45-1/8"	¼-½-¼	11.391 - 13.397	1+C2+0+C2+1	2	1+C2+0+C2+1	2	1+C3+0+C3+1	3	1+C4+0+C4+1	4	1+C4+0+C4+1	4	1+C4+0+C4+1	4
	⅓-⅓-⅓	13.398 - 14.683	1+C2+0+C2+1	2	1+C2+0+C2+1	2	1+C3+0+C3+1	3	1+C3+0+C3+1	4	1+C3+0+C3+1	4	1+C3+0+C3+1	4
47-3/4"	¼-½-¼	11.391 - 12.297	1+C2+0+C2+1	2	1+C3+0+C3+1	2	1+C3+0+C3+1	3	1+C4+0+C4+1	4	1+C4+0+C4+1	4	1+C4+0+C4+1	4
	⅓-⅓-⅓	12.298 - 15.558	1+C2+0+C2+1	2	1+C3+0+C3+1	2	1+C3+0+C3+1	3	1+C3+0+C3+1	4	1+C3+0+C3+1	4	1+C3+0+C3+1	4
52-1/8"	Custom	11.391 - 12.016	1+C2+0+C2+1	2	1+C3+0+C3+1	2	1+C3+0+C3+1	3	1+C4+0+C4+1	4	1+C5+0+C5+1	4	1+C5+0+C5+1	4
	¼-½-¼	12.017 - 13.397	1+C2+0+C2+1	2	1+C3+0+C3+1	2	1+C3+0+C3+1	3	1+C4+0+C4+1	4	1+C5+0+C5+1	4	1+C5+0+C5+1	4
	⅓-⅓-⅓	13.398 - 17.016	1+C2+0+C2+1	2	1+C3+0+C3+1	2	1+C3+0+C3+1	3	1+C4+0+C4+1	4	1+C4+0+C4+1	4	1+C4+0+C4+1	4
60"	Custom	11.391 - 13.397	1+C2+2+C2+1	2	1+C2+2+C2+1	2	1+C3+2+C3+1	3	1+C4+2+C4+1	4	1+C4+2+C4+1	4	1+C4+2+C4+1	4
	¼-½-¼	13.398 - 15.360	1+C2+2+C2+1	2	1+C2+2+C2+1	2	1+C3+2+C3+1	3	1+C4+2+C4+1	4	1+C4+2+C4+1	4	1+C4+2+C4+1	4
	⅓-⅓-⅓	15.361 - 19.641	1+C2+0+C2+1	2	1+C3+0+C3+1	2	1+C4+0+C4+1	3	1+C5+0+C5+1	4	1+C5+0+C5+1	4	1+C5+0+C5+1	4
75"	Custom	11.391 - 13.397	1+C2+3+C2+1	2	1+C2+3+C2+1	2	1+C3+4+C3+1	3	1+C4+4+C4+1	4	1+C4+4+C4+1	4	1+C4+3+C4+1	4
	¼-½-¼	13.398 - 19.110	1+C2+3+C2+1	2	1+C2+3+C2+1	2	1+C3+3+C3+1	3	1+C4+3+C4+1	4	1+C4+3+C4+1	4	1+C4+2+C4+1	4
	⅓-⅓-⅓	19.111 - 24.641	1+C3+0+C3+1	2	1+C4+0+C4+1	2	1+C4+0+C4+1	3	1+C5+0+C5+1	4	1+C5+0+C5+1	4	1+C5+0+C5+1	4
96"	Custom	17.641 - 19.397	1+C2+3+C2+1	2	1+C2+4+C2+1	2	1+C3+4+C3+1	3	1+C4+5+C4+1	4	1+C4+4+C4+1	4	1+C4+4+C4+1	4
	¼-½-¼	19.398 - 24.360	1+C2+3+C2+1	2	1+C2+4+C2+1	2	1+C3+4+C3+1	3	1+C4+4+C4+1	4	1+C4+4+C4+1	4	1+C4+3+C4+1	4
	⅓-⅓-⅓	24.361 - 31.641	2+C2+3+C2+2	2	2+C2+3+C2+2	2	2+C3+3+C3+2	3	2+C4+3+C4+2	4	2+C4+3+C4+2	4	1+C4+2+C4+1	4
120"	¼-½-¼	29.641 - 32.515	2+C2+3+C2+2	2	2+C2+4+C2+2	2	2+C3+4+C3+2	3	2+C4+5+C4+2	4	2+C4+4+C4+2	4	2+C4+3+C4+2	4
	⅓-⅓-⅓	32.516 - 39.641	2+C2+3+C2+2	2	2+C2+4+C2+2	2	3+C3+4+C3+2	3	2+C4+4+C4+2	4	2+C4+3+C4+2	4	2+C4+3+C4+2	4
140"	Custom	** - 39.641	2+C2+3+C2+2	2	2+C2+4+C2+2	2	3+C3+4+C3+2	3	2+C4+4+C4+2	4	2+C4+4+C4+2	4	2+C4+3+C4+2	4

Glass Types 2 - 4 / Reinf. Level R4	Sash Configuration	Sash Width Range (in)	24" Height Head & Sill	24" Height Jamb	30" Height Head & Sill	30" Height Jamb	36" Height Head & Sill	36" Height Jamb	48" Height Head & Sill	48" Height Jamb	54" Height Head & Sill	54" Height Jamb	63" Height Head & Sill	63" Height Jamb
			Anchor Group C											
Window Buck Width 35-1/4"	⅓-⅓-⅓	11.391 - 11.391	1+C2+0+C2+1	2	1+C2+0+C2+1	2	1+C2+0+C2+1	3	1+C2+0+C2+1	4	1+C2+0+C2+1	4	1+C2+0+C2+1	4
38"	⅓-⅓-⅓	12.308 - 12.308	1+C2+0+C2+1	2	1+C2+0+C2+1	2	1+C2+0+C2+1	3	1+C3+0+C3+1	4	1+C3+0+C3+1	4	1+C3+0+C3+1	4
45-1/8"	¼-½-¼	11.391 - 13.397	1+C2+0+C2+1	2	1+C2+0+C2+1	2	1+C3+0+C3+1	3	1+C4+0+C4+1	4	1+C4+0+C4+1	4	1+C4+0+C4+1	4
	⅓-⅓-⅓	13.398 - 14.683	1+C2+0+C2+1	2	1+C2+0+C2+1	2	1+C3+0+C3+1	3	1+C3+0+C3+1	4	1+C3+0+C3+1	4	1+C3+0+C3+1	4
47-3/4"	¼-½-¼	11.391 - 12.297	1+C2+0+C2+1	2	1+C3+0+C3+1	2	1+C3+0+C3+1	3	1+C4+0+C4+1	4	1+C4+0+C4+1	4	1+C4+0+C4+1	4
	⅓-⅓-⅓	12.298 - 15.558	1+C2+0+C2+1	2	1+C3+0+C3+1	2	1+C3+0+C3+1	3	1+C3+0+C3+1	4	1+C3+0+C3+1	4	1+C3+0+C3+1	4
52-1/8"	Custom	11.391 - 12.016	1+C2+0+C2+1	2	1+C3+0+C3+1	2	1+C3+0+C3+1	3	1+C4+0+C4+1	4	1+C5+0+C5+1	4	1+C5+0+C5+1	4
	¼-½-¼	12.017 - 13.397	1+C2+0+C2+1	2	1+C3+0+C3+1	2	1+C3+0+C3+1	3	1+C4+0+C4+1	4	1+C5+0+C5+1	4	1+C5+0+C5+1	4
	⅓-⅓-⅓	13.398 - 17.016	1+C2+0+C2+1	2	1+C3+0+C3+1	2	1+C3+0+C3+1	3	1+C4+0+C4+1	4	1+C4+0+C4+1	4	1+C4+0+C4+1	4
60"	Custom	11.391 - 13.397	1+C2+2+C2+1	2	1+C2+2+C2+1	2	1+C3+2+C3+1	3	1+C4+2+C4+1	4	1+C4+2+C4+1	4	1+C4+2+C4+1	4
	¼-½-¼	13.398 - 15.360	1+C2+2+C2+1	2	1+C2+2+C2+1	2	1+C3+2+C3+1	3	1+C4+2+C4+1	4	1+C4+2+C4+1	4	1+C4+1+C4+1	4
	⅓-⅓-⅓	15.361 - 19.641	1+C2+0+C2+1	2	1+C3+0+C3+1	2	1+C4+0+C4+1	3	1+C5+0+C5+1	4	1+C5+0+C5+1	4	1+C5+0+C5+1	4
75"	Custom	11.391 - 13.397	1+C2+3+C2+1	2	1+C2+3+C2+1	2	1+C3+3+C3+1	3	1+C4+4+C4+1	4	1+C4+3+C4+1	4	1+C4+3+C4+1	4
	¼-½-¼	13.398 - 19.110	1+C2+2+C2+1	2	1+C2+3+C2+1	2	1+C3+3+C3+1	3	1+C4+3+C4+1	4	1+C4+3+C4+1	4	1+C4+2+C4+1	4
	⅓-⅓-⅓	19.111 - 24.641	1+C3+0+C3+1	2	1+C4+0+C4+1	2	1+C4+0+C4+1	3	1+C5+0+C5+1	4	1+C5+0+C5+1	4	1+C5+0+C5+1	4
96"	Custom	17.641 - 19.397	1+C2+3+C2+1	2	1+C2+4+C2+1	2	1+C3+4+C3+1	3	1+C4+4+C4+1	4	1+C4+4+C4+1	4	1+C4+3+C4+1	4
	¼-½-¼	19.398 - 24.360	1+C2+3+C2+1	2	1+C2+3+C2+1	2	1+C3+4+C3+1	3	1+C4+4+C4+1	4	1+C4+3+C4+1	4	1+C4+3+C4+1	4
	⅓-⅓-⅓	24.361 - 31.641	2+C2+3+C2+2	2	2+C2+3+C2+2	2	2+C3+3+C3+2	3	2+C4+3+C4+2	4	1+C4+2+C4+1	4	1+C4+2+C4+1	4
120"	¼-½-¼	29.641 - 32.515	2+C2+3+C2+2	2	2+C2+4+C2+2	2	2+C3+4+C3+2	3	2+C4+4+C4+2	4	2+C4+3+C4+2	4	2+C4+3+C4+2	4
	⅓-⅓-⅓	32.516 - 39.641	2+C2+3+C2+2	2	2+C2+4+C2+2	2	3+C3+4+C3+2	3	2+C4+4+C4+2	4	2+C4+3+C4+2	4	2+C4+2+C4+2	4
140"	Custom	** - 39.641	2+C2+3+C2+2	2	2+C2+4+C2+2	2	3+C3+4+C3+2	3	2+C4+4+C4+2	4	2+C4+4+C4+2	4	2+C4+3+C4+2	4
			Anchor Group D											
Window Buck Width 35-1/4"	⅓-⅓-⅓	11.391 - 11.391	1+C2+0+C2+1	2	1+C2+0+C2+1	2	1+C2+0+C2+1	3	1+C2+0+C2+1	4	1+C2+0+C2+1	4	1+C2+0+C2+1	4
38"	⅓-⅓-⅓	12.308 - 12.308	1+C2+0+C2+1	2	1+C2+0+C2+1	2	1+C2+0+C2+1	3	1+C3+0+C3+1	4	1+C3+0+C3+1	4	1+C3+0+C3+1	4
45-1/8"	¼-½-¼	11.391 - 13.397	1+C2+0+C2+1	2	1+C2+0+C2+1	2	1+C3+0+C3+1	3	1+C4+0+C4+1	4	1+C4+0+C4+1	4	1+C4+0+C4+1	4
	⅓-⅓-⅓	13.398 - 14.683	1+C2+0+C2+1	2	1+C2+0+C2+1	2	1+C3+0+C3+1	3	1+C3+0+C3+1	4	1+C3+0+C3+1	4	1+C3+0+C3+1	4
47-3/4"	¼-½-¼	11.391 - 12.297	1+C2+0+C2+1	2	1+C3+0+C3+1	2	1+C3+0+C3+1	3	1+C4+0+C4+1	4	1+C4+0+C4+1	4	1+C4+0+C4+1	4
	⅓-⅓-⅓	12.298 - 15.558	1+C2+0+C2+1	2	1+C3+0+C3+1	2	1+C3+0+C3+1	3	1+C3+0+C3+1	4	1+C3+0+C3+1	4	1+C3+0+C3+1	4
52-1/8"	Custom	11.391 - 12.016	1+C2+0+C2+1	2	1+C3+0+C3+1	2	1+C3+0+C3+1	3	1+C4+0+C4+1	4	1+C5+0+C5+1	4	1+C5+0+C5+1	4
	¼-½-¼	12.017 - 13.397	1+C2+0+C2+1	2	1+C3+0+C3+1	2	1+C3+0+C3+1	3	1+C4+0+C4+1	4	1+C5+0+C5+1	4	1+C5+0+C5+1	4
	⅓-⅓-⅓	13.398 - 17.016	1+C2+0+C2+1	2	1+C3+0+C3+1	2	1+C3+0+C3+1	3	1+C4+0+C4+1	4	1+C4+0+C4+1	4	1+C4+0+C4+1	4
60"	Custom	11.391 - 13.397	1+C2+2+C2+1	2	1+C2+2+C2+1	2	1+C3+2+C3+1	3	1+C4+2+C4+1	4	1+C4+2+C4+1	4	1+C4+2+C4+1	4
	¼-½-¼	13.398 - 15.360	1+C2+2+C2+1	2	1+C2+2+C2+1	2	1+C3+2+C3+1	3	1+C4+2+C4+1	4	1+C4+2+C4+1	4	1+C4+1+C4+1	4
	⅓-⅓-⅓	15.361 - 19.641	1+C2+0+C2+1	2	1+C3+0+C3+1	2	1+C4+0+C4+1	3	1+C5+0+C5+1	4	1+C5+0+C5+1	4	1+C5+0+C5+1	4
75"	Custom	11.391 - 13.397	1+C2+2+C2+1	2	1+C2+3+C2+1	2	1+C3+3+C3+1	3	1+C4+3+C4+1	4	1+C4+3+C4+1	4	1+C4+3+C4+1	4
	¼-½-¼	13.398 - 19.110	1+C2+2+C2+1	2	1+C2+3+C2+1	2	1+C3+3+C3+1	3	1+C4+3+C4+1	4	1+C4+3+C4+1	4	1+C4+2+C4+1	4
	⅓-⅓-⅓	19.111 - 24.641	1+C3+0+C3+1	2	1+C4+0+C4+1	2	1+C4+0+C4+1	3	1+C5+0+C5+1	4	1+C5+0+C5+1	4	1+C5+0+C5+1	4
96"	Custom	17.641 - 19.397	1+C2+3+C2+1	2	1+C2+3+C2+1	2	1+C3+4+C3+1	3	1+C4+4+C4+1	4	1+C4+4+C4+1	4	1+C4+3+C4+1	4
	¼-½-¼	19.398 - 24.360	1+C2+3+C2+1	2	1+C2+3+C2+1	2	1+C3+3+C3+1	3	1+C4+4+C4+1	4	1+C4+3+C4+1	4	1+C4+3+C4+1	4
	⅓-⅓-⅓	24.361 - 31.641	2+C2+3+C2+2	2	2+C2+2+C2+2	2	2+C3+3+C3+2	3	2+C4+3+C4+2	4	1+C4+2+C4+1	4	1+C4+2+C4+1	4
120"	¼-½-¼	29.641 - 32.515	2+C2+3+C2+2	2	2+C2+3+C2+2	2	2+C3+4+C3+2	3	2+C4+4+C4+2	4	2+C4+3+C4+2	4	2+C4+3+C4+2	4
	⅓-⅓-⅓	32.516 - 39.641	2+C2+3+C2+2	2	2+C2+3+C2+2	2	2+C3+3+C3+2	3	2+C4+3+C4+2	4	2+C4+3+C4+2	4	2+C4+2+C4+2	4
140"	Custom	** - 39.641	2+C2+3+C2+2	2	2+C2+3+C2+2	2	2+C3+4+C3+2	3	2+C4+4+C4+2	4	2+C4+3+C4+2	4	2+C4+3+C4+2	4

SEE TABLE 12 FOR DESIGN PRESSURE

Max. Anchor O.C. Spacing for "Integral-Fin" Installation	Anchor Group F
	2.5"

** MIN. SASH SIZE = $\frac{\text{WINDOW WIDTH - 60.72}}{2}$

NOTES:
1) USE THESE TABLES FOR ALL WINDOWS INSTALLED THROUGH THE FRAME OR INTEGRAL FIN.
2) FRAME DIMENSIONS ARE BUCK WIDTH AND BUCK HEIGHT (SEE SHEETS 3-4). SASH SIZE IS AS PER THE FIGURE.
3) FOR SIZES NOT SHOWN, ROUND UP TO THE NEXT AVAILABLE WIDTH OR HEIGHT DIMENSION SHOWN ON THE TABLE.
4) "1/4-1/2-1/4" AND "1/3-1/3-1/3" INDICATE THAT THOSE STANDARD SASH CONFIGURATIONS FALL WITHIN THE SASH WIDTH RANGE IN THE ADJACENT COLUMN. "CUSTOM" INDICATES THAT NO STANDARD SASH CONFIGURATIONS FALL WITHIN THE RANGE.

PRODUCT REVISED
as complying with the Florida Building Code
NOA-No. 23-0707.09
Expiration Date 09/24/2025
By Ishaq I. Chanda
Miami-Dade Product Control

Revision:
D) UPDATED TO 2023 BUILDING CODE.
LY - 06/15/23

PREPARED BY A. LYNN MILLER
1070 TECHNOLOGY DRIVE
N. VENICE, FL 34275
(941) 480-1600
REGISTRATION #29296

PGT Custom Windows and Doors
1070 TECHNOLOGY DRIVE
N. VENICE, FL 34275
(941) 480-1600

Series	Desc.	Sheet	DWG No.	Drawn By	Date	Rev.
VINYL HORIZONTAL ROLLER WINDOW (NI)	ANCHOR QUANTITY TABLES	HR5410	13 OF 15	JENS ROSOWSKI	05/15/15	D

Title: HR5410-NOA

ANTHONY LYNN MILLER
LICENSE
No. 58705
STATE OF FLORIDA
PROFESSIONAL ENGINEER
06/16/23
A. LYNN MILLER, P.E.
P.E.# 58705

TABLE 20:

Bill of Material

#	Part #	Description	Material
1	620121	Frame Head, Sill and Jambs - J-Channel	PVC
2	620122	Frame Head, Sill and Jambs - Flange	PVC
3	620123	Frame Head, Sill and Jambs - Fin	PVC
4	620124	Frame Head, Sill and Jambs - Equal Leg	PVC
13	620172	Anti-Lift Insert / Trim Cover	PVC
14	620131	Fixed Meeting Rail	PVC
15	620158	Track Insert	6063 T6 Al
16	620129	Sash Rail (Sides, Top & Bottom)	PVC
19	620156	Pull Rail Interlock	6063 T6 Al
20	620144	Pull Rail Interlock Cover	PVC
21	620150	Light Sash Reinforcement	6063 T6 Al
22	620151	Standard Sash Reinforcement	6063 T6 Al
23	620152	HD Sash Reinforcement	6063 T6 Al
24	620153	Standard Meeting Rail Reinforcement	6005 T5 Al
25	620154	HD Meeting Rail Reinforcement	6005 T5 Al
26	620155	H.D. Horiz. Roller Meeting Rail Reinforcement	6005 T5 Al
28	61644	Weatherstrip, .187" x .270" Fin Pile	
29	61719	Weatherstrip, .187" x .220" Poly Pile	
30		#8 x 1" Ph. PH SDS (Interlock Mounting Screw)	410 SS
31	78X312PPA	#8 x 3-1/2" Ph. PH SMS (Fixed Meeting Rail Screw)	410 SS
32	71669SP	Meeting Rail Screw Support Plate	6063 T5 Al
33	720210	Weep Hole Cover	PVC
34	720187	Installation Screw Hole Plug	PVC
37	720197	Auto Lock	C Steel
38	720199	Sweep Lock	Cast Zinc
39	720196	Auto Lock Cover Assembly	Cast Zinc
40		#6 x 1-1/8" Ph. FH SDS (Auto and Sweep Lock Screw)	SS
41	720200	Auto and Sweep Lock Keeper	Cast Zinc
42	76X34PPA	#6 x 3/4" PH. PH SDS (Keeper Screw)	SS
43	7612FPTX	#6 x 1/2" FPH TEK	SS
44		Leadstile Top Corner Key	Nylon
45		Leadstile Bottom Corner Key	Nylon
46		Lockstile Top Corner Key	Nylon
47		Lockstile Bottom Corner Key	Nylon
48	720204	Wheel	Nylon
73	620136	I.G. Bead	PVC
74		Backbedding, GE 7700 or Dow 791 or Dow 983	Silicone
75	71684/5	Setting Block (7/8" x 2" x 1/8"), 85 +/- 5 duro.	EPDM
80	61011	Roll-formed Screen	Alum
81	61012	Extruded Screen Frame	Alum
82		Extruded Screen Spreader Bar	Alum
83	47042W	Screen Corner Key with Pull Ring	PVC
84	47041W/CKGLB	Screen Corner Key No Pull Ring	PVC
85	7CASPM	Tension Spring	SS
86	61816C48	Screen Cloth	Fiberglass
87	61635/61614	.140" Screen Spline (Machine/Hand Rolled)	Vinyl

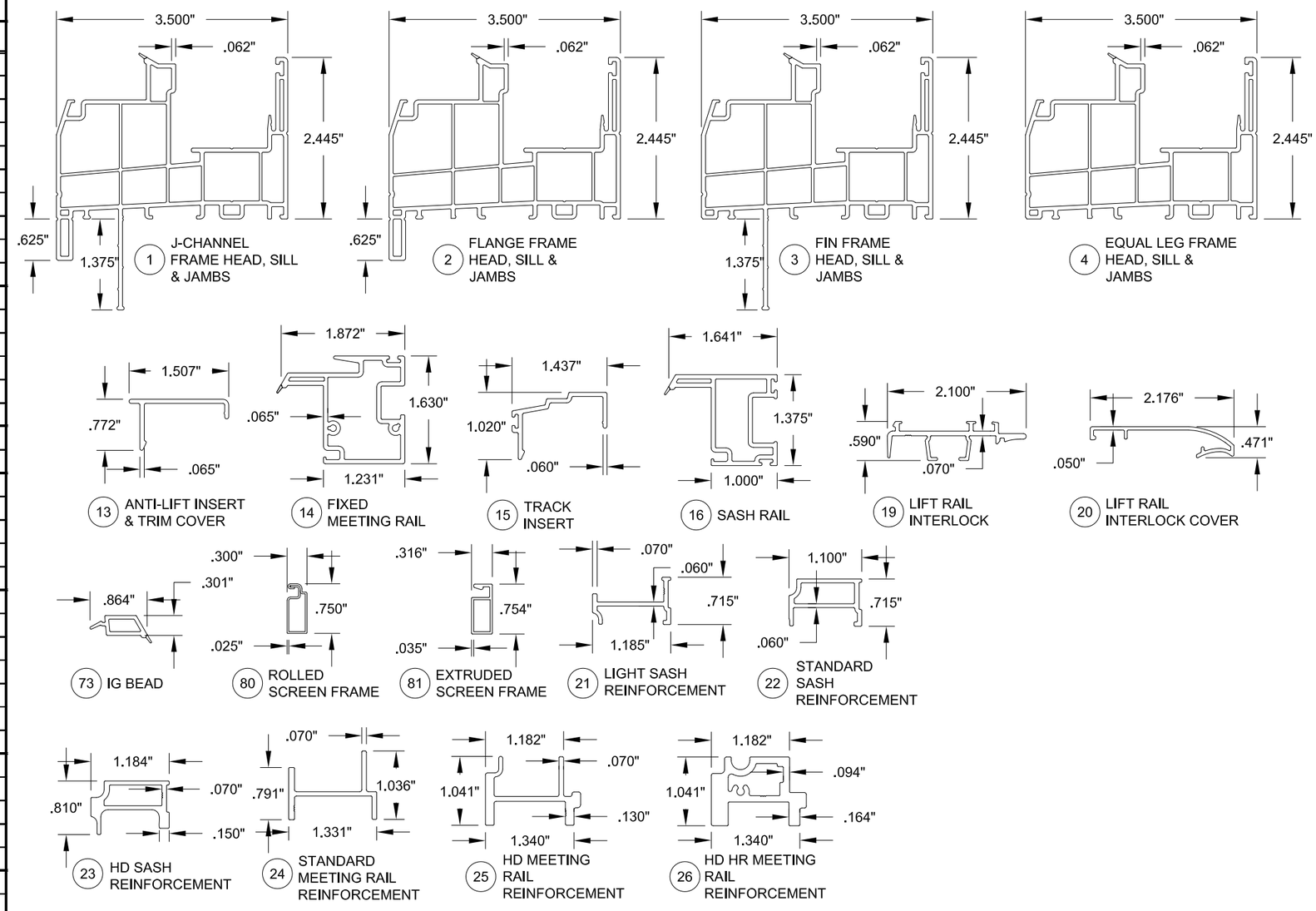

NOTES:
1) ITEMS # 5-12, 17, 18, 27, 35, 36 & 49-72 ARE NOT USED AND ARE NOT PART OF THIS APPROVAL.
2) PVC BY VISION EXTRUSION, LTD., TO BE LABELED FOR AAMA EXTRUDER CODE.

PRODUCT REVISED
as complying with the Florida Building Code
NOA–No. 23-0707.09
Expiration Date 09/24/2025
By Ishwar I. Chanda
Miami–Dade Product Control

PGT
Custom Windows and Doors
1070 TECHNOLOGY DRIVE
N. VENICE, FL 34275
(941) 480-1600

PREPARED BY A. LYNN MILLER
1070 TECHNOLOGY DRIVE
N. VENICE, FL 34275
(941) 480-1600
REGISTRATION #29296

Title	VINYL SLIDING GLASS WINDOW (NI)	Date	05/15/15
Desc.	EXTRUSIONS AND BOM	Drawn By	JENS ROSOWSKI
Rev	CHANGED TO VISION EXTRUSION, LTD.	Rev Date	06/15/23

Series	Sheet	DWG No.	Rev.
HR5410	14 OF 15	HR5410-NOA	D

ANTHONY LYNN MILLER
LICENSE
No. 58705
A. Lynn Miller 06/16/23
STATE OF FLORIDA
PROFESSIONAL ENGINEER

A. LYNN MILLER, P.E.
P.E.# 58705

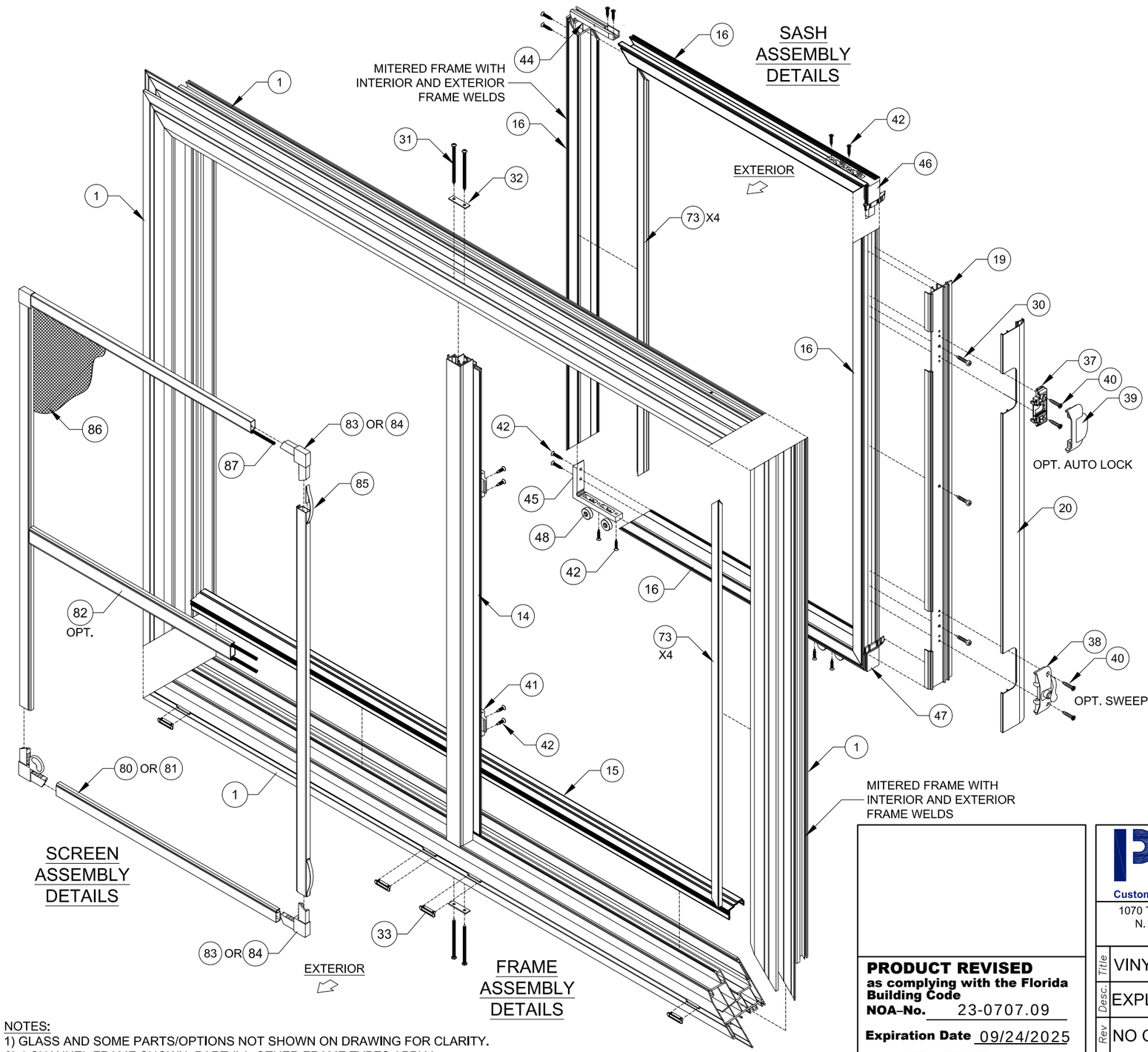

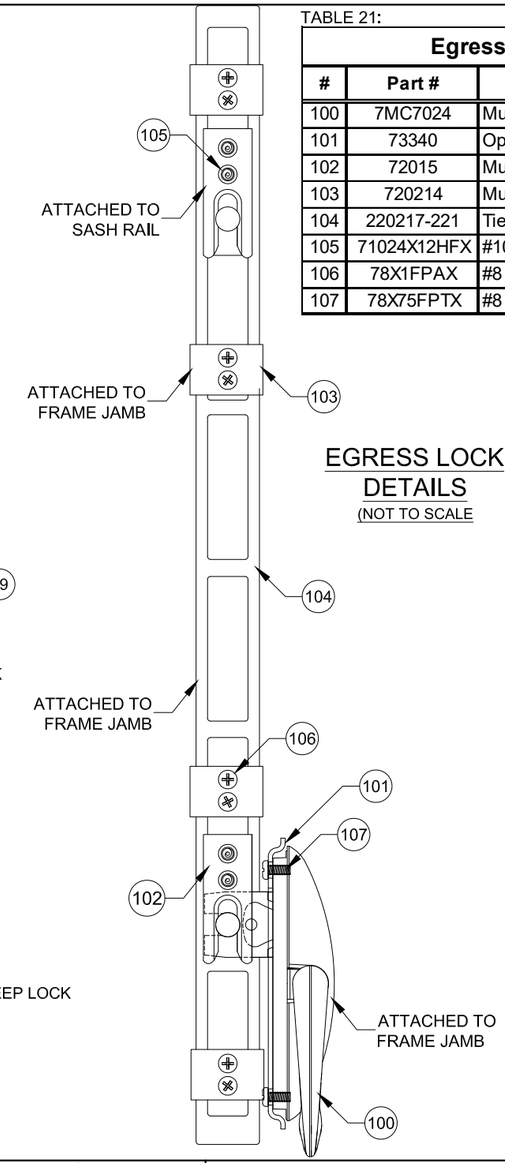

TABLE 21:

Egress Lock Bill of Material

#	Part #	Description	Material
100	7MC7024	Multi-Point Lock Operator	Cast Zinc
101	73340	Operator mounting Plate	Steel
102	72015	Multipoint Lock Keeper	Aluminum
103	720214	Multipoint Lock Guide	Nylon
104	220217-221	Tie Bar (Length Varies)	Stainless Steel
105	71024X12HFX	#10 x 1/2" HH MS	Stainless Steel
106	78X1FPAX	#8 x 1" Ph. FH SMS	Stainless Steel
107	78X75FPTX	#8 x 3/4" Ph. FH SDS	Stainless Steel

NOTES:
1) GLASS AND SOME PARTS/OPTIONS NOT SHOWN ON DRAWING FOR CLARITY.
2) J-CHANNEL FRAME SHOWN, PART # 1. OTHER FRAME TYPES APPLY.
3) FOR REINFORCEMENT TYPES, SEE DETAILS ON SHEETS 6-8.

PRODUCT REVISED
as complying with the Florida Building Code
NOA–No. 23-0707.09
Expiration Date 09/24/2025
By Ishwar I. Chandra
Miami–Dade Product Control

PGT
Custom Windows and Doors
1070 TECHNOLOGY DRIVE
N. VENICE, FL 34275
(941) 480-1600

PREPARED BY A. LYNN MILLER
1070 TECHNOLOGY DRIVE
N. VENICE, FL 34275
(941) 480-1600
REGISTRATION #29296

Title	VINYL SLIDING GLASS WINDOW (NI)	Date	05/15/15
Desc.	EXPLODED WINDOW VIEW	Drawn By	JENS ROSOWSKI
Rev	NO CHANGES THIS SHEET - LY	Rev Date	06/15/23
Series	HR5410	Sheet	15 OF 15
DWG No.	HR5410-NOA	Rev.	D

ANTHONY LYNN MILLER
LICENSE
No. 58705
A. Lynn Miller 06/16/23
STATE OF FLORIDA
PROFESSIONAL ENGINEER

A. LYNN MILLER, P.E.
P.E.# 58705