MIAMI-DADE COUNTY
DEPARTMENT OF REGULATORY AND ECONOMIC RESOURCES (RER)
BOARD AND CODE ADMINISTRATION DIVISION

MIAMI-DADE COUNTY
PRODUCT CONTROL SECTION
11805 SW 26 Street, Room 208
Miami, Florida 33175-2474
T (786) 315-2590 F (786) 315-2599
www.miamidade.gov/economy

NOTICE OF ACCEPTANCE (NOA)

Qualitas Manufacturing, Inc. (QMI)
1661 Glenlake Avenue
Itasca, ILL 60143

SCOPE:
This NOA is being issued under the applicable rules and regulations governing the use of construction materials. The documentation submitted has been reviewed and accepted by Miami-Dade County RER-Product Control Section to be used in Miami–Dade County and other areas where allowed by the Authority Having Jurisdiction (AHJ).
This NOA shall not be valid after the expiration date stated below. The Miami-Dade County Product Control Division (In Miami–Dade County) and/or the AHJ (in areas other than Miami-Dade County) reserve the right to have this product or material tested for quality assurance purposes. If this product or material fails to perform in the accepted manner, the manufacturer will incur the expense of such testing and the AHJ may immediately revoke, modify, or suspend the use of such product or material within their jurisdiction. RER reserves the right to revoke this acceptance if it is determined by Miami–Dade County Product Control Section that this product or material fails to meet the requirements of the applicable building code.
This product is approved as described herein and has been designed to comply with the High Velocity Hurricane Zone of the Florida Building Code.

DESCRIPTION: QOMPACT3-AL8 Roll-Up Hurricane Shutter (Wall and Build-Out Mounts) - L.M.I.

APPROVAL DOCUMENT: Drawing No. **23-60247**, titled "QOMPACT3-AL8 Roll-Up Hurricane Shutter (Wall and Build-Out Mounts), prepared by Engineering Express, last revised on 12/22/23, sheets 1 through 18 of 18, signed and sealed by Richard Neet, P.E., bearing Miami-Dade County Product Control Revision stamp with the Notice of Acceptance number and the expiration date by the Miami-Dade County Product Control Section.

MISSILE IMPACT RATING: Large and Small Missile Impact Resistant

LIMITATIONS:
1. Roll-down Mechanism is NOT part of this approval & must be certified by independent testing agency.
2. Minimum separation from interior storm bar to existing glass shall be as shown on sheet 1 of 18.

LABELING: Each unit shall bear a permanent label with the manufacturer's name or logo, city, state, the following statement: "Miami–Dade County Product Control Approved", and NOA number, per TAS-201, TAS-202, and TAS-203, unless otherwise noted herein.

RENEWAL of this NOA shall be considered after a renewal application has been filed and there has been no change in the applicable building code negatively affecting the performance of this product.

TERMINATION of this NOA will occur after the expiration date or if there has been a revision or change in the materials, use, and/or manufacture of the product or process. Misuse of this NOA as an endorsement of any product, for sales, advertising or any other purposes shall automatically terminate this NOA. Failure to comply with any section of this NOA shall be cause for termination and removal of NOA.

ADVERTISEMENT: The NOA number preceded by the words Miami–Dade County, Florida, and followed by the expiration date may be displayed in advertising literature. If any portion of the NOA is displayed, then it shall be done in its entirety.

INSPECTION: A copy of this entire NOA shall be provided to the user by the manufacturer or its distributors and shall be available for inspection at the job site at the request of the Building Official.
This NOA revises NOA #22-0727.08 and consists of this page 1 and evidence submitted pages E-1 and E-2 as well as approval document mentioned above.
The submitted documentation was reviewed by **Helmy A. Makar, P.E., M.S.**

MIAMI-DADE COUNTY APPROVED

Helmy A. Makar
01/18/2024

NOA No. 23-1010.06
Expiration Date: 08/25/2027
Approval Date: 01/18/2024

Qualitas Manufacturing, Inc. (QMI)

NOTICE OF ACCEPTANCE: EVIDENCE SUBMITTED

1. EVIDENCE SUBMITTED UNDER PREVIOUS APPROVAL NOA #22-0727.08

A. DRAWINGS

1. *Drawing No.* ***20-32431.1****, titled "QOMPACT3-AL8 Roll-Up Hurricane Shutter (Wall and Build-Out Mounts)**, prepared by Engineering Express, last revised on 08/05/22, sheets 1 through 18 of 18, signed and sealed by Richard Neet, P.E.*

B. TESTS

1. Test report on: 1) Uniform Static Air Pressure Test per PA 202,
   2) Large Missile Impact Test per PA 201
   3) Cyclic Wind Pressure Test per PA 203

   along with marked–up drawings and installation diagram of AL8 / QOM3 Roll Down Shutters, prepared by Intertek, Test Report # **L7254.01-450-18 R0** dated 06/23/21, signed and sealed by Vinu J. Abraham, P. E.

2. Test report on: 1) Uniform Static Air Pressure Test per PA 202,
   2) Large Missile Impact Test per PA 201
   3) Cyclic Wind Pressure Test per PA 203

   along with marked–up drawings and installation diagram of AL8 / QOM3 Roll Down Shutters, prepared by Intertek, Test Report # **L7254.04-450-18 R0** dated 06/22/21, signed and sealed by Vinu J. Abraham, P. E.

C. CALCULATIONS

1. *Comparative analysis for slats; storm bars, headers, tracks, mullions and anchors, using rational analysis, 54 pages, dated 02/08/22, prepared by Engineering Express, signed and sealed by Richard Neet, P.E., on 02/08/22.*

D. QUALITY ASSURANCE

1. *By Miami- Dade County Department of Regulatory and Economic Resources (RER).*

E. MATERIAL CERTIFICATIONS

1. *None.*

F. STATEMENTS

1. *Statement Letter of product compliance to FBC, 2020, prepared by Engineering Express, dated 02/17/2022, signed and sealed by Richard Neet, P.E.*

Helmy A. Makar, P.E., M.S.
Product Control Section Supervisor
NOA No. 23-1010.06
Expiration Date: 08/25/2027
Approval Date: 01/18/2024

NOTICE OF ACCEPTANCE: EVIDENCE SUBMITTED

2. NEW EVIDENCE SUBMITTED

A. DRAWINGS

1. *Drawing No.* ***23-60247****, titled "QOMPACT3-AL8 Roll-Up Hurricane Shutter (Wall and Build-Out Mounts)****, prepared by Engineering Express, last revised on 12/22/23, sheets 1 through 18 of 18, signed and sealed by Richard Neet, P.E.*

B. TESTS

1. *None.*

C. CALCULATIONS

1. *None.*

D. QUALITY ASSURANCE

1. *By Miami- Dade County Department of Regulatory and Economic Resources (RER).*

E. MATERIAL CERTIFICATIONS

1. *None.*

F. STATEMENTS

1. *Statement Letter of product compliance to FBC, 2023, prepared by Engineering Express, dated 01/02/2024, signed and sealed by Richard Neet, P.E.*

Helmy A. Makar, P.E., M.S.
Product Control Section Supervisor
NOA No. 23-1010.06
Expiration Date: 08/25/2027
Approval Date: 01/18/2024

QOMPACT3 - AL8 ROLL-UP HURRICANE SHUTTER: WALL MOUNT & BUILD-OUT MOUNT

FOR TRAP MOUNT AND ATTACHMENT TO MULLIONS, SEE NOA # 23-1010.07

RICHARD NEET, P.E.
PE# 86488 CA# 9885

DECEMBER 22, 2023

FL

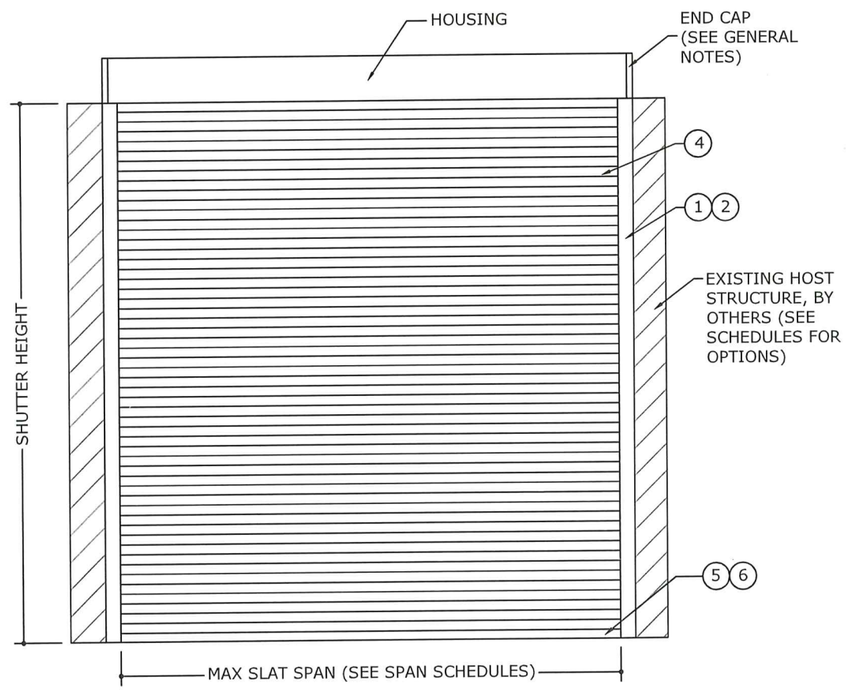

PRODUCT REVISED
as complying with the Florida Building Code
Acceptance No 23-1010.06
Expiration Date 08/25/2027
By
Miami Dade Product Control

1/1 TYPICAL ROLL-UP SHUTTER
N.T.S. EXTERIOR ELEV
SEE REMAINING SHEETS FOR COMPLETE ELEVATION OPTIONS

GENERAL NOTES

1. THE SYSTEM DESCRIBED HEREIN HAS BEEN DESIGNED AND TESTED IN ACCORDANCE WITH THE FLORIDA BUILDING CODE (FBC) EIGHTH EDITION (2023) FOR USE INSIDE AND OUTSIDE THE HIGH-VELOCITY HURRICANE ZONE, PER ASTM E330, E1886, AND E1996 AND TAS 201, 202 & 203 STANDARDS. SEE PRODUCT APPROVAL EVALUATION FOR ADDITIONAL INFORMATION.
2. NO 33-1/3% INCREASE IN ALLOWABLE STRESS HAS BEEN USED IN THE DESIGN OF THIS SYSTEM. WIND LOAD DURATION FACTOR Cd=1.6 HAS BEEN USED FOR WOOD ANCHOR DESIGN.
3. POSITIVE AND NEGATIVE DESIGN PRESSURES CALCULATED FOR USE WITH THIS SYSTEM SHALL BE DETERMINED PER SEPARATE ENGINEERING IN ACCORDANCE WITH THE GOVERNING CODE. PRESSURE REQUIREMENTS AS DETERMINED IN ACCORDANCE WITH ASCE 7 AND CHAPTER 1609 OF THE FBC SHALL BE LESS THAN OR EQUAL TO THE POSITIVE OR NEGATIVE ASD DESIGN PRESSURE CAPACITY VALUES LISTED HEREIN FOR ANY ASSEMBLY AS SHOWN.
4. DESIGN PRESSURES NOTED HEREIN ARE BASED ON MAXIMUM TESTED PRESSURES DIVIDED BY A 1.5 SAFETY FACTOR.
5. THE SYSTEM DETAILED HEREIN IS GENERIC AND DOES NOT PROVIDE INFORMATION FOR A SPECIFIC SITE. FOR SITE CONDITIONS DIFFERENT FROM THE CONDITIONS DETAILED HEREIN, A LICENSED ENGINEER OR REGISTERED ARCHITECT SHALL PREPARE SITE SPECIFIC DOCUMENTS FOR USE IN CONJUNCTION WITH THIS DOCUMENT.
6. ROLL-UP MECHANISM, END CAP, AND HOOD ASSEMBLY ARE NOT PART OF THIS APPROVAL.
7. THIS DOCUMENT CONTAINS INFORMATION RELEVANT TO THE NECESSARY STRUCTURAL REQUIREMENTS OF THE SYSTEM INSTALLATION. COMPONENTS AND FASTENERS NOT REFERENCED WHICH ARE PART OF THE INTERNAL FABRICATION OF THE SPECIFIED SYSTEMS OR ASSEMBLIES SHALL BE PER MANUFACTURER PUBLISHED SPECIFICATIONS.
8. THE STRUCTURAL ADEQUACY OF THE EXISTING STRUCTURE TO WITHSTAND SUPERIMPOSED LOADS BY THIS SYSTEM SHALL BE VERIFIED BY OTHERS.
9. ALL EXTRUSIONS SHALL BE MINIMUM 6063-T6 ALUMINUM ALLOY, UNLESS NOTED OTHERWISE.
10. "QOMPACT3" MAY BE ABBREVIATED TO "QOM3" AS USED IN THIS PRODUCT APPROVAL AND REFERS TO THE SAME SYSTEM.
11. EACH SHUTTER ASSEMBLY SHALL BEAR A PERMANENT LABEL ON THE BOTTOM OF THE HOOD FACING THE EXTERIOR, OR ANYWHERE ELSE ALLOWED PER SECTIONS 1709.9.3 OF THE FBC 2020, TYP. LABEL SHALL PROVIDE THE PRODUCT INFORMATION AS REQUIRED BY THE MIAMI-DADE NOTICE OF ACCEPTANCE (NOA), TYP.
12. ALL BOLTS & WASHERS SHALL BE ZINC COATED STEEL, GALVANIZED STEEL, OR STAINLESS STEEL WITH A MINIMUM TENSILE YIELD STRENGTH OF 60 KSI. ALL ALUMINUM 3/16"Ø OR 1/4"Ø POP RIVETS SHALL BE 7075-T6 OR STRONGER.
13. ALL STEEL IN CONTACT WITH ALUMINUM SHALL BE PAINTED OR PLATED AS PRESCRIBED IN THE ABOVE-NOTED BUILDING CODE.
14. ALTERATIONS, ADDITIONS, HIGHLIGHTING, OR OTHER MARKINGS TO THIS DOCUMENT ARE ONLY PERMITTED TO SHOW SITE-SPECIFIC CONDITIONS, HOWEVER ANY CHANGES, ALTERATIONS OR ADDITIONS MADE TO THE CONTENT OF THIS DOCUMENT WILL INVALIDATE THIS CERTIFICATION.

SPAN SCHEDULE

SLAT SPAN	ALLOWABLE DESIGN PRESSURE
48"	± 246.7 PSF
54"	± 229.5 PSF
60"	± 214.3 PSF
66"	± 212.4 PSF
72"	± 213.3 PSF
78"	± 198.3 PSF
84"	± 187.0 PSF
90"	± 178.2 PSF
96"	± 171.0 PSF
102"	± 165.1 PSF
108"	± 160.1 PSF
114"	± 155.8 PSF
120"	± 152.0 PSF
126"	± 148.5 PSF
132"	± 145.4 PSF
138"	± 142.6 PSF
144"	± 140.0 PSF
150"	± 131.9 PSF
156"	± 124.7 PSF
162"	± 118.1 PSF
168"	± 112.1 PSF
174"	± 106.7 PSF
180"	± 101.7 PSF
186"	± 97.1 PSF
192"	± 92.9 PSF
198"	± 89.0 PSF
204"	± 85.4 PSF
210"	± 82.1 PSF
216"	± 79.0 PSF
222"	± 76.1 PSF
228"	± 73.4 PSF
236"	± 70.0 PSF

GLASS SEPARATION SCHEDULE

SLAT SPAN	INSTALLATIONS ≤ 30' ABOVE	INSTALLATIONS > 30' ABOVE
48"	4.50"	4.50"
54"	6.00"	6.00"
60"	6.00"	6.00"
66"	7.00"	7.00"
72"	8.00"	8.00"
78"	8.00"	8.00"
84"	8.50"	8.50"
90"	8.50"	8.50"
96"	9.00"	9.00"
102"	9.00"	9.00"
108"	9.00"	9.00"
114"	9.50"	9.50"
120"	9.50"	9.50"
126"	9.50"	9.50"
132"	10.00"	10.00"
138"	10.00"	10.00"
144"	10.00"	10.00"
150"	14.00"	10.50"
156"	14.00"	10.50"
162"	14.00"	10.50"
168"	14.00"	11.00"
174"	14.00"	11.00"
180"	14.00"	11.50"
186"	14.00"	11.50"
192"	14.00"	12.00"
198"	14.00"	12.00"
204"	14.00"	12.00"
210"	14.00"	12.50"
216"	14.00"	12.50"
222"	14.00"	12.50"
228"	14.00"	13.00"
236"	14.00"	13.00"

SPAN SCHEDULE NOTES:

- SLAT SPAN IS DEFINED AS THE DISTANCE BETWEEN RAILS FOR SINGLE SPAN ASSEMBLIES.
- LINEAR INTERPOLATION BETWEEN SHUTTER SPANS IS PERMITTED.

GLASS SEPARATION NOTES:

- SLAT SPAN IS DEFINED AS THE DISTANCE BETWEEN RAILS FOR SINGLE SPAN ASSEMBLIES.
- SEPARATION FROM GLAZING IS REQUIRED FOR ALL INSTALLATIONS THAT ARE REQUIRED TO MAINTAIN A MINIMUM SEPARATION BETWEEN THE SHUTTER AND ANY GLAZING, AS REQUIRED BY THE BUILDING DEPARTMENT OR AUTHORITY HAVING JURISDICTION.
- LINEAR INTERPOLATION BETWEEN SHUTTER SPANS IS NOT PERMITTED. FOR SPANS BETWEEN THOSE INDICATED ABOVE, THE SEPARATION FROM GLASS FOR THE NEXT HIGHER SPAN SHALL BE USED.

ENGINEERING EXPRESS®
POSTAL ADDRESS:
2234 NORTH FEDERAL HWY #7664
BOCA RATON, FL 33431
ENGINEERINGEXPRESS.COM

QUALITAS MANUFACTURING INC. (QMI)
1661 GLENLAKE AVE
ITASCA, IL 60143
PHONE: (866) 980-1750

QOMPACT3 - AL8 ROLL-UP HURRICANE SHUTTER (WALL & BUILD-OUT MOUNTS)
FBC EIGHTH EDITION (2023) | MIAMI-DADE NOA

REMARKS	DRWN	CHKD	DATE
PREV. SUB. NOA 22-0727.08	EPR	RWN	08/05/22
2023 FBC UPDATE	EPR	RWN	09/26/23
ADDRESSING MD COMMENTS	MRT	RWN	12/22/23

23-60247

SCALE: NTS UNLESS NOTED

01 OF 18

RICHARD NEET, P.E.
PE# 86488 CA# 9885

DECEMBER 22, 2023

FL

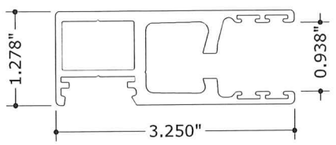

RETAIN ONLY RAIL
PQ010218
QOM3 RAIL #1

1A N.T.S 6063-T6

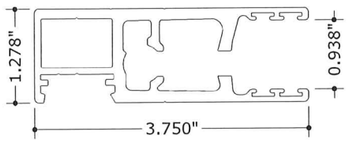

RETAIN AND STOP RAIL
PQ010219
QOM3 RAIL #2

1B N.T.S 6063-T6

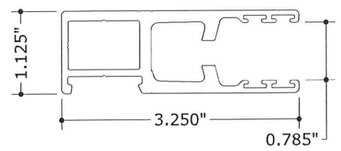

RETAIN ONLY RAIL
PQ010220
AL8 RAIL #1

2A N.T.S 6063-T6

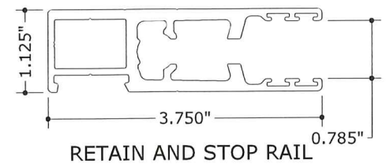

RETAIN AND STOP RAIL
PQ010221
AL8 RAIL #2

2B N.T.S 6063-T6

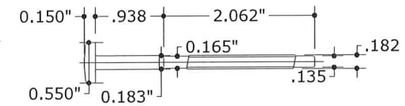

PQ010229
RETAINING
SCREW

3 N.T.S 6063-T6

PQ010230
BUSHING

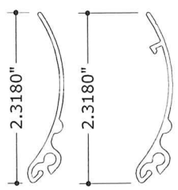

PQ010212 PQ010213
STARTER SLATS

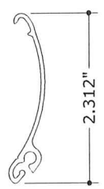

SLAT #1
QOM3 - AL8
PQ010200

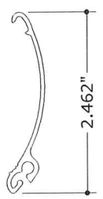

SLAT #2
QOM3 - AL8
PQ010201

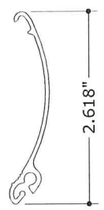

SLAT #3
QOM3 - AL8
PQ010202

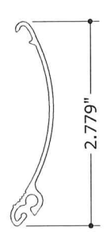

SLAT #4
QOM3 - AL8
PQ010203

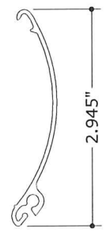

SLAT #5
QOM3
PQ010204

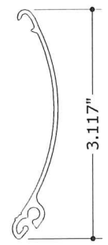

SLAT #6
QOM3
PQ010205

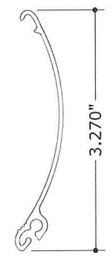

SLAT #7
QOM3
PQ010206

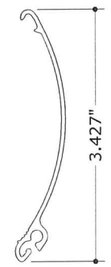

SLAT #8
QOM3
PQ010207

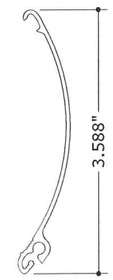

SLAT #9
QOM3
PQ010208

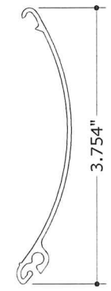

SLAT #10
QOM3
PQ010209

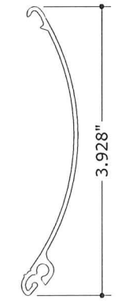

SLAT #11
QOM3
PQ010210

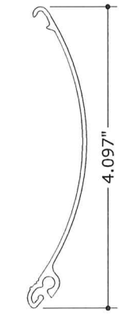

SLAT #12
QOM3
PQ010211

SINGLE WALL SLATS

4 N.T.S 0.055" THICK, TYP. 6063-T6

PQ010242
COUPLER

PRODUCT REVISED
as complying with the Florida
Building Code
Acceptance No 23-1010.06
Expiration Date 05/25/2027
By Holy A. Milton
Miami Dade Product Control

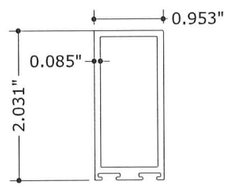

PQ010231
THUMB TURN
HOUSING

5A N.T.S 6063-T6

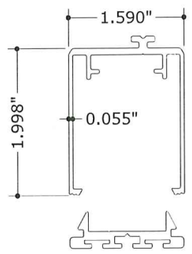

PQ010243
BODY

PQ010244
BASE

THUMB TURN
BASE SLAT ASSEMBLY

5B N.T.S 6063-T6

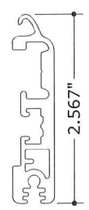

PQ010222
SLIDE LOCK
BASE SLAT

6A N.T.S 6063-T6

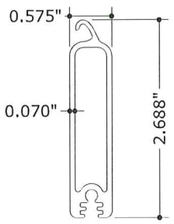

PQ010223
STANDARD
BASE SLAT

6B N.T.S 6063-T6

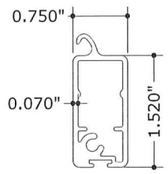

PQ010224
SMALL
LOW PROFILE
BASE SLAT

6C N.T.S 6063-T6

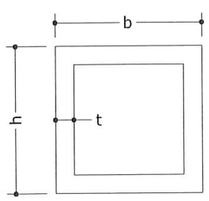

BO/TRAP TUBE	b	h	t
7A	2"	2"	$\frac{1}{4}$"
7B	4"	4"	$\frac{1}{4}$"

BUILD OUT / TRAP
MOUNTED TUBES

7 N.T.S 6063-T6

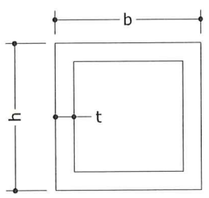

MULLIONS	b	h	t
8A	4	4"	$\frac{1}{4}$"
8B	4"	4"	$\frac{1}{4}$"
8C	4"	6"	$\frac{1}{4}$"
8D	4"	8"	$\frac{1}{4}$"

BUILD OUT / TRAP
MOUNTED TUBES

8 N.T.S 6063-T6

(SLAT 4)
PQ010214

(SLAT 6)
PQ010215

FINGER PULL SLATS

9 N.T.S 6063-T6

PQ010225
COUPLER

PQ010226
RAIL SNAP COVER

11 N.T.S 6063-T6

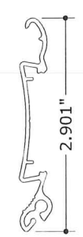

(SLAT 4)
PQ010216

(SLAT 6)
PQ010217

UTILITY SLATS

12 N.T.S 6063-T6

PQ010227
UTILITY SLAT SNAP COVER

13 N.T.S 6063-T6

PQ010228
HANDLE

14 N.T.S 6063-T6

POSTAL ADDRESS:
2234 NORTH FEDERAL HWY #7664
BOCA RATON, FL 33431
ENGINEERINGEXPRESS.COM

QUALITAS MANUFACTURING INC. (QMI)
1661 GLENLAKE AVE
ITASCA, IL 60143
PHONE: (866) 980-1750

QOMPACT3 - AL8 ROLL-UP HURRICANE SHUTTER
(WALL & BUILD-OUT MOUNTS)
FBC EIGHTH EDITION (2023) | MIAMI-DADE NOA

REMARKS	DRWN	CHKD	DATE
PREV. SUB. NOA 22-0727.08	EPR	RWN	08/05/22
2023 FBC UPDATE	EPR	RWN	09/26/23
ADDRESSING MD COMMENTS	MRT	RWN	12/22/23
-	-	-	-
-	-	-	-

23-60247

SCALE: NTS UNLESS NOTED

02 OF 18

RICHARD NEET, P.E.
PE# 86488 CA# 9885

DECEMBER 22, 2023

FL

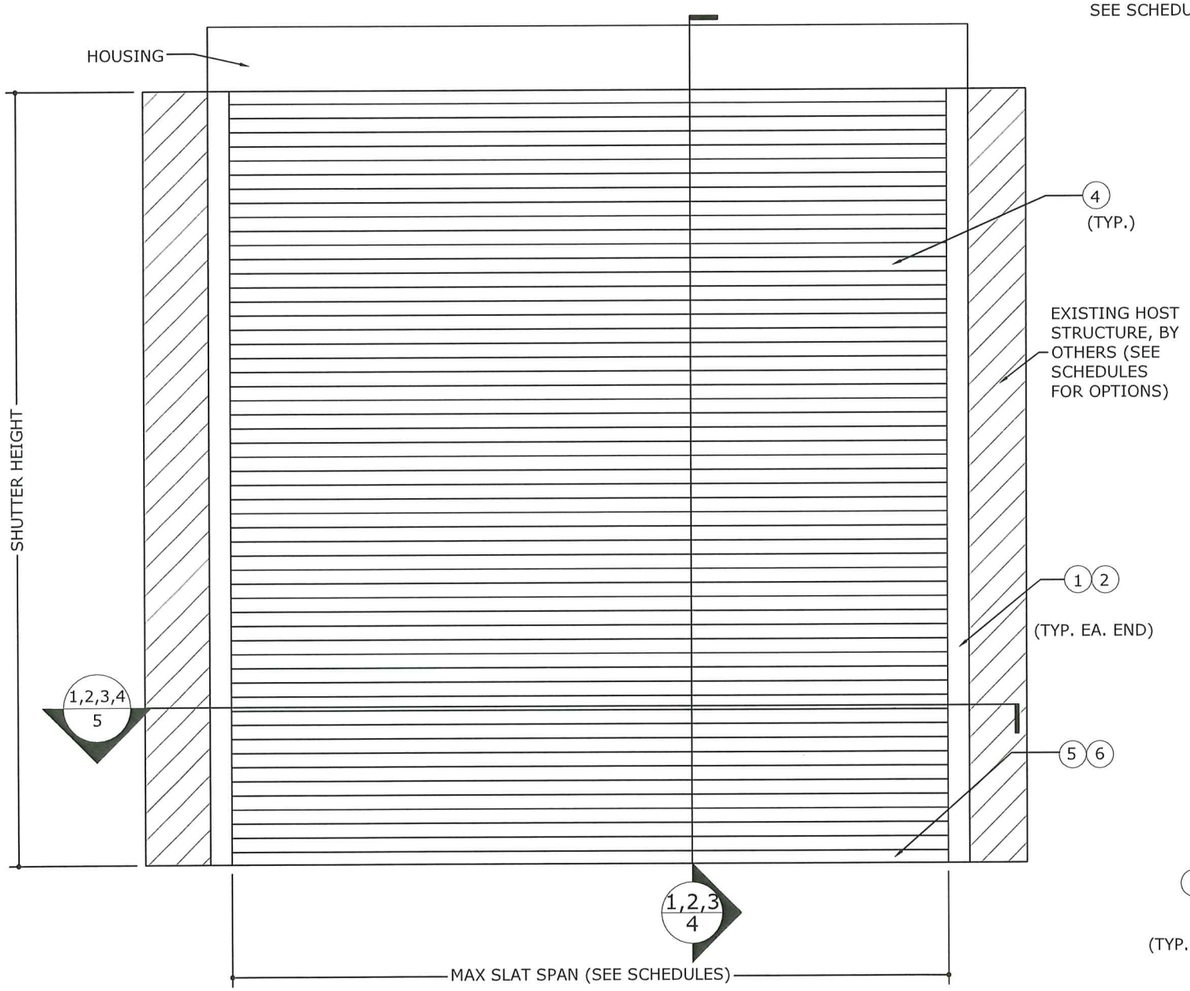

1/3 TYPICAL SINGLE UNIT ELEVATION W/O MULLIONS

N.T.S.

EXTERIOR ELEV

PRODUCT REVISED
as complying with the Florida
Building Code
Acceptance No 23-1010.06
Expiration Date 04/25/2027
By Holly A. Mahler
Miami Dade Product Control

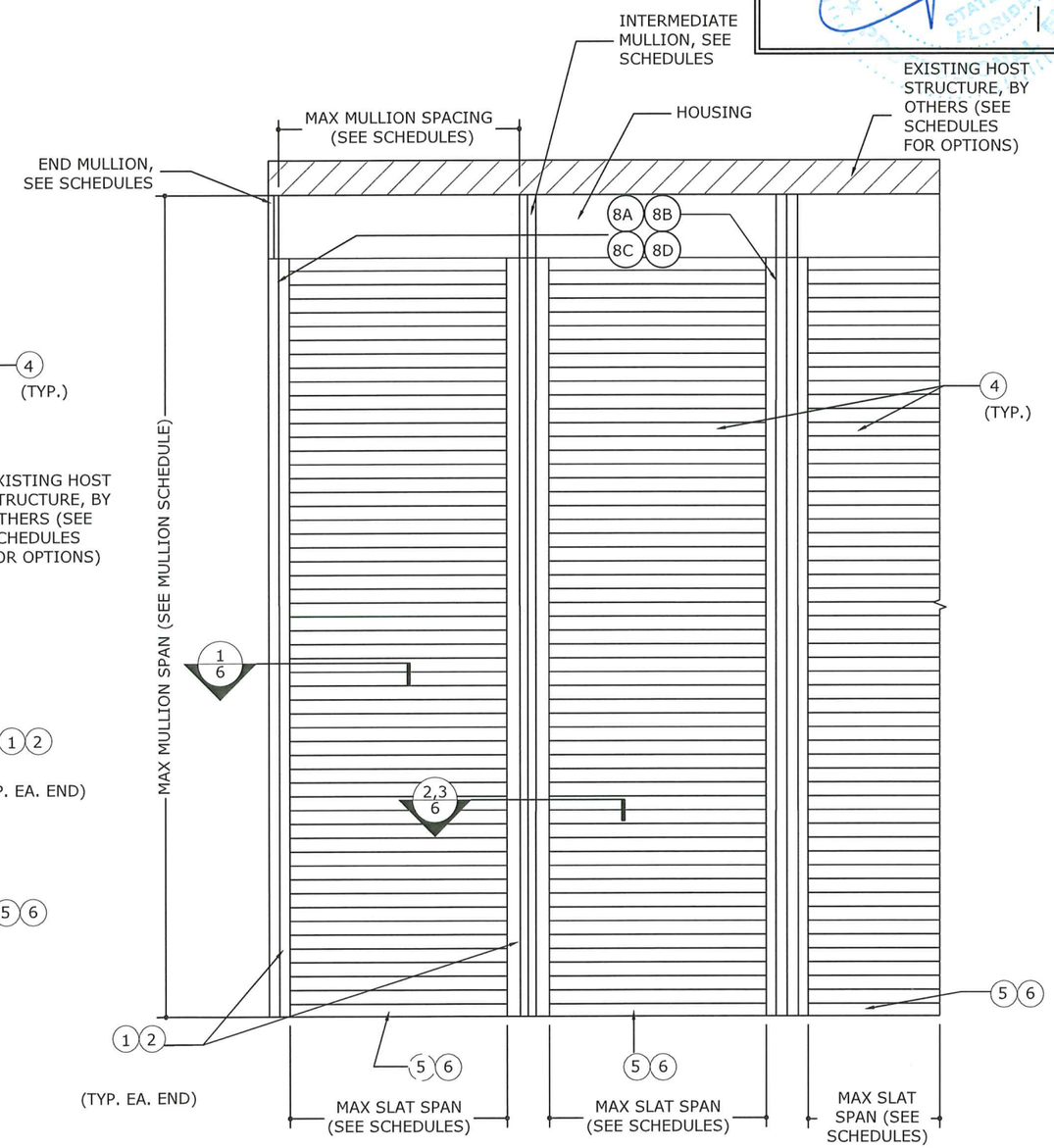

2/3 TYPICAL CONSECUTIVE SINGLE UNIT ELEVATION WITH MULLIONS

N.T.S.

EXTERIOR ELEV

ENGINEERING EXPRESS®
POSTAL ADDRESS:
2234 NORTH FEDERAL HWY #7664
BOCA RATON, FL 33431
ENGINEERINGEXPRESS.COM

QUALITAS MANUFACTURING INC. (QMI)
1661 GLENLAKE AVE
ITASCA, IL 60143
PHONE: (866) 980-1750

QOMPACT3 - AL8 ROLL-UP HURRICANE SHUTTER
(WALL & BUILD-OUT MOUNTS)
FBC EIGHTH EDITION (2023) | MIAMI-DADE NOA

REMARKS	DRWN	CHKD	DATE
PREV. SUB. NOA 22-0727.08	EPR	RWN	08/05/22
2023 FBC UPDATE	EPR	RWN	09/26/23
ADDRESSING MD COMMENTS	MRT	RWN	12/22/23
-	-	-	-
-	-	-	-

23-60247

SCALE: NTS UNLESS NOTED

03 OF 18

SHUTTER ATTACHMENT TO HOST

RICHARD NEET, P.E.
PE# 86488 CA# 9885

DECEMBER 22, 2023

FL

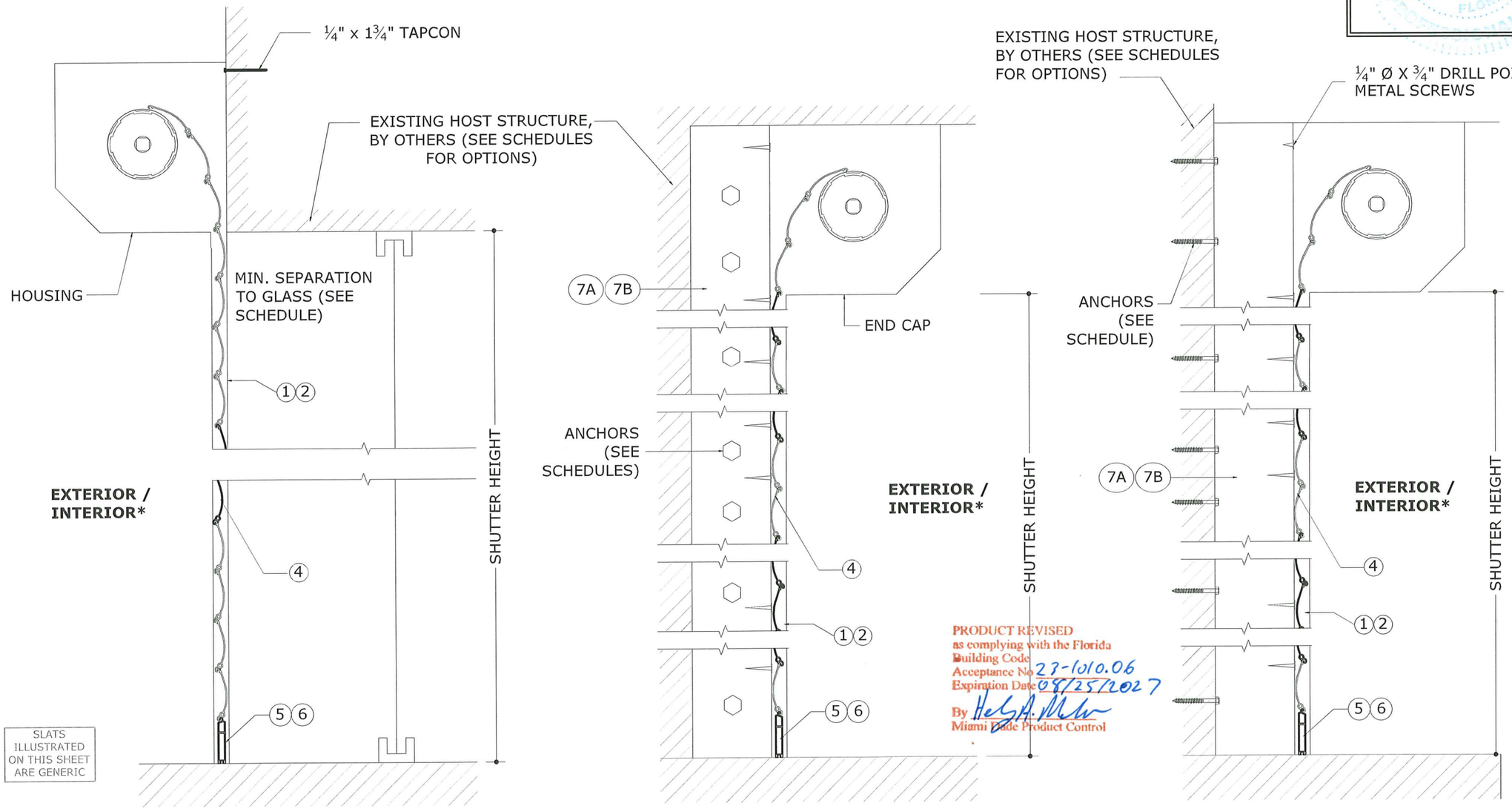

PRODUCT REVISED
as complying with the Florida
Building Code
Acceptance No 23-1010.06
Expiration Date 08/25/2027
By
Miami Dade Product Control

* WHEN REVERSE MOUNTED ADD 1" OF GLASS SEPARATION PER "GLASS SEPARATION SCHEDULE" ON SHEET 1

1/4 WALL MOUNT
N.T.S. SECTION VIEW

2/4 TRAP MOUNT
N.T.S. SECTION VIEW
SEE NOA # 23-1010.07

3/4 BUILD-OUT MOUNT
N.T.S. SECTION VIEW

HOUSING NOTES:
1. HOUSING (0.034" THICK ALUM, 3105-H14 MIN)
2. END CAP (CAST ALUM, SHALL BE CAPABLE OF SUPPORTING SLAT AND LIFT MECHANISM WEIGHT)
3. HOOD HAS BEEN TESTED FOR IMPACT / CYCLING AND MAY BE INSTALLED WITHIN OPENING
4. EXTRUSIONS SHOWN HEREIN ARE GENERIC AND DO NOT REPRESENT THE ACTUAL SYSTEM

ENGINEERING EXPRESS®
POSTAL ADDRESS:
2234 NORTH FEDERAL HWY #7664
BOCA RATON, FL 33431
ENGINEERINGEXPRESS.COM

QUALITAS MANUFACTURING INC. (QMI)
1661 GLENLAKE AVE
ITASCA, IL 60143
PHONE: (866) 980-1750

QOMPACT3 - AL8 ROLL-UP HURRICANE SHUTTER
(WALL & BUILD-OUT MOUNTS)
FBC EIGHTH EDITION (2023) | MIAMI-DADE NOA

REMARKS	DRWN	CHKD	DATE
PREV. SUB. NOA 22-0727.08	EPR	RVW	08/05/22
2023 FBC UPDATE	EPR	RVW	09/26/23
ADDRESSING MD COMMENTS	MRT	RVW	12/22/23
-	-	-	-
-	-	-	-

23-60247

SCALE: NTS UNLESS NOTED

04 OF 18

SHUTTER ATTACHMENT TO HOST

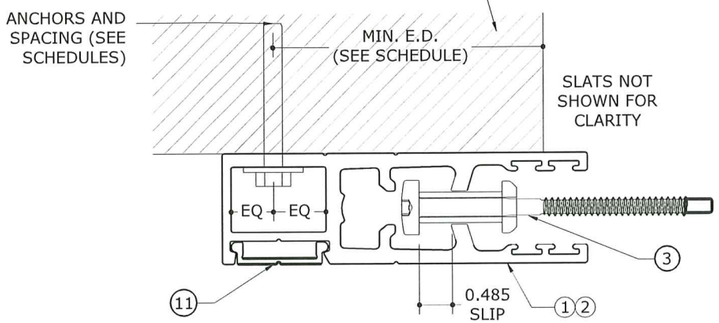

1 / 5 WALL MOUNT
N.T.S. SECTION VIEW

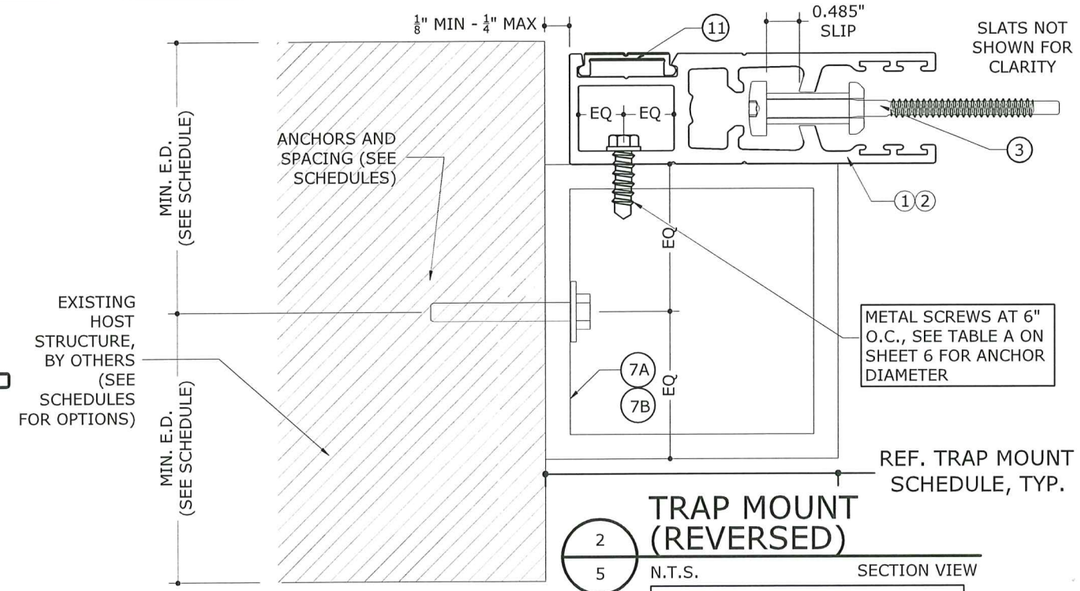

2 / 5 TRAP MOUNT (REVERSED)
N.T.S. SECTION VIEW

SEE NOA # 23-1010.07

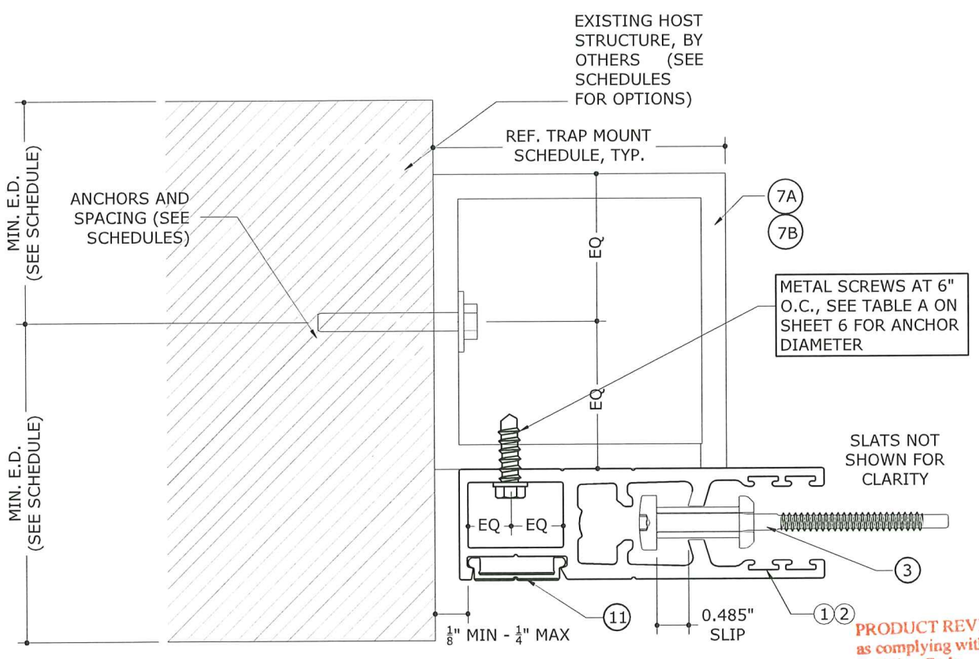

3 / 5 TRAP MOUNT
N.T.S. SECTION VIEW

SEE NOA # 23-1010.07

PRODUCT REVISED
as complying with the Florida Building Code
Acceptance No 23-1010.06
Expiration Date 08/25/2027
By Miami Dade Product Control

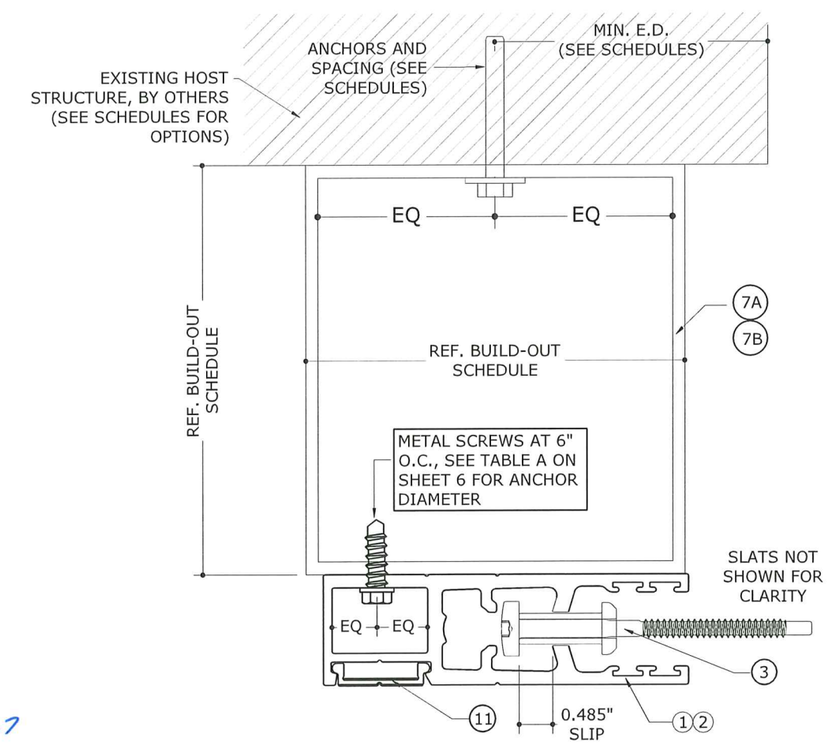

4 / 5 BUILD-OUT MOUNT
N.T.S. SECTION VIEW

RICHARD NEET, P.E.
PE# 86488 CA# 9885

DECEMBER 22, 2023

FL

ENGINEERING EXPRESS®
POSTAL ADDRESS:
2234 NORTH FEDERAL HWY #7664
BOCA RATON, FL 33431
ENGINEERINGEXPRESS.COM

QUALITAS MANUFACTURING INC. (QMI)
1661 GLENLAKE AVE
ITASCA, IL 60143
PHONE: (866) 980-1750

QOMPACT3 - AL8 ROLL-UP HURRICANE SHUTTER (WALL & BUILD-OUT MOUNTS)
FBC EIGHTH EDITION (2023) | MIAMI-DADE NOA

REMARKS	DRWN	CHKD	DATE
PREV. SUB. NOA 22-0727.08	EPR	RWN	08/05/22
2023 FBC UPDATE	EPR	RWN	09/26/23
ADDRESSING MD COMMENTS	MRT	RWN	12/22/23

23-60247

SCALE: NTS UNLESS NOTED

SHUTTER ATTACHMENT OPTION TO TUBES & MULLIONS

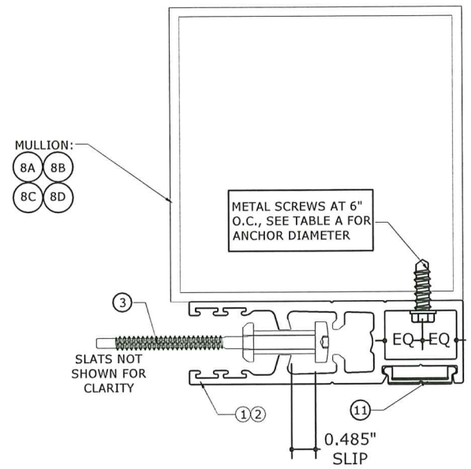

1/6 FACE MOUNT (END MULLION)

N.T.S. SECTION VIEW

ORIENTATION #2 FACE MOUNT END MULLION

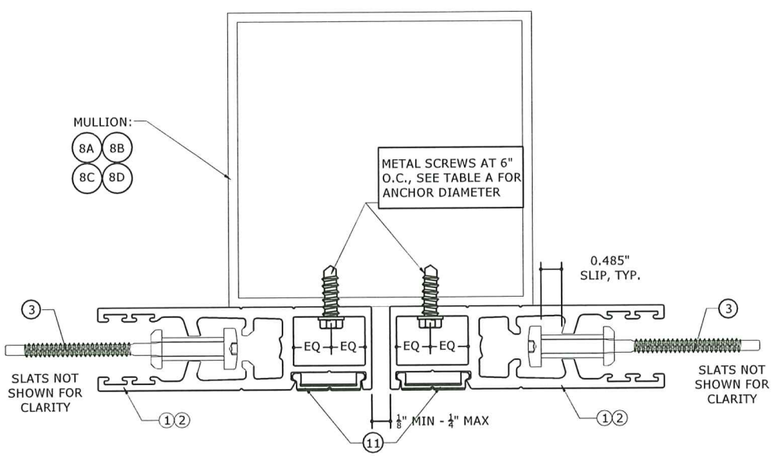

3/6 FACE MOUNT (INT. MULLION)

N.T.S. SECTION VIEW

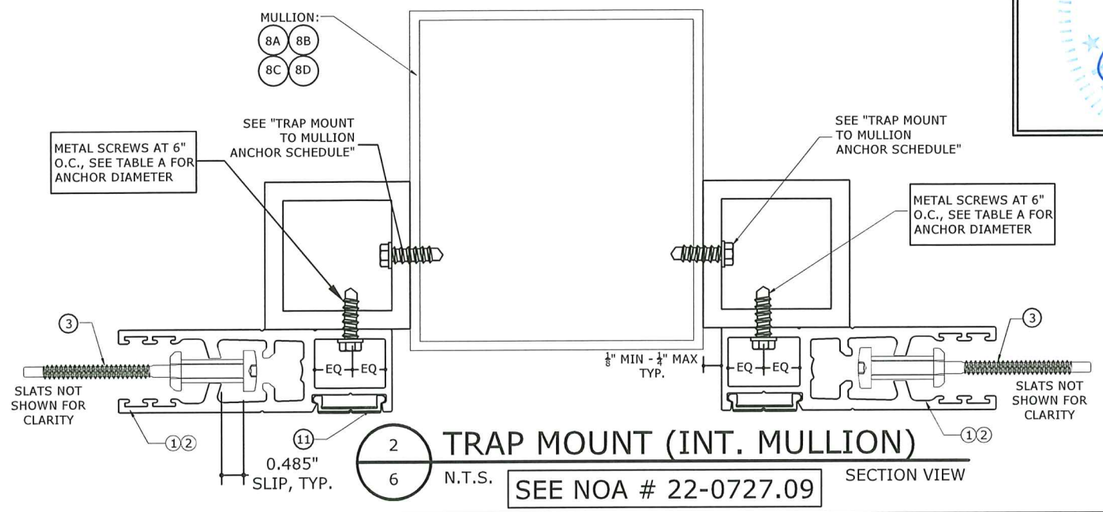

2/6 TRAP MOUNT (INT. MULLION)

N.T.S. SEE NOA # 22-0727.09 SECTION VIEW

TABLE A:

FASTENER NOTE:

1. USE 5/16"Øx1½" HEX HEAD METAL SCREWS (w/DRILL POINT) AT 6" O.C., FOR THE FOLLOWING SCENARIOS:
   - ALL SHUTTER SPANS > 144"
   - ALL SHUTTER SPANS w/ DESIGN PRESSURES EQUAL TO (OR GREATER THAN) THE LISTED PRESSURE:

SPAN	DP
48"	≥ 246.7 PSF
60"	≥ 214.3 PSF
72"	≥ 213.3 PSF
84"	≥ 187.0 PSF
96"	≥ 171.0 PSF
108"	≥ 160.1 PSF
120"	≥ 152.0 PSF
132"	≥ 145.4 PSF
144"	≥ 140.0 PSF

ALL OTHER SCENARIOS ARE PERMITTED TO USE ¼"Øx1½" HEX HEAD METAL SCREWS (w/DRILL POINT) AT 6" O.C.

PRODUCT REVISED
as complying with the Florida
Building Code
Acceptance No 23-1010.06
Expiration Date 06/25/2027
By Hely A. Muñoz
Miami Dade Product Control

TRAP MOUNT TO MULLION ANCHOR SCHEDULE

SLAT SPAN	DESIGN PRESSURE	MAXIMUM SPACING (O.C.): #14 410 SS (DRILL POINT SCREW) W/ FULL THREAD PENETRATION; TO 0.1875" MIN. 6061-T6 ALUM	5/16" 410 SS (DRILL POINT SCREW) W/ FULL THREAD PENETRATION; TO 0.1875" MIN. 6061-T6 ALUM	#14 410 SS (DRILL POINT SCREW) W/ FULL THREAD PENETRATION; TO 0.25" MIN. 6061-T6 ALUM	5/16" 410 SS (DRILL POINT SCREW) W/ FULL THREAD PENETRATION; TO 0.25" MIN. 6061-T6 ALUM	3/8" ELCO TAPFLEX W/ FULL THREAD PENETRATION; TO 0.25" MIN. 6061-T6 ALUM
48"	+/- 40 PSF	6.0"	6.0"	6.0"	6.0"	6.0"
	+/- 90 PSF	6.0"	6.0"	6.0"	6.0"	6.0"
	+/- 140 PSF	6.0"	6.0"	6.0"	6.0"	6.0"
	+/- 190 PSF	6.0"	6.0"	6.0"	6.0"	6.0"
	+/- 246.7 PSF	6.0"	6.0"	6.0"	6.0"	6.0"
60"	+/- 40 PSF	6.0"	6.0"	6.0"	6.0"	6.0"
	+/- 80 PSF	6.0"	6.0"	6.0"	6.0"	6.0"
	+/- 120 PSF	6.0"	6.0"	6.0"	6.0"	6.0"
	+/- 170 PSF	6.0"	6.0"	6.0"	6.0"	6.0"
	+/- 214.3 PSF		6.0"		6.0"	6.0"
72"	+/- 40 PSF	6.0"	6.0"	6.0"	6.0"	6.0"
	+/- 80 PSF	6.0"	6.0"	6.0"	6.0"	6.0"
	+/- 120 PSF	6.0"	6.0"	6.0"	6.0"	6.0"
	+/- 160 PSF		6.0"		6.0"	6.0"
	+/- 213.3 PSF		4.6"		5.5"	6.0"
84"	+/- 40 PSF	6.0"	6.0"	6.0"	6.0"	6.0"
	+/- 70 PSF	6.0"	6.0"	6.0"	6.0"	6.0"
	+/- 110 PSF	4.7"	6.0"	5.0"	6.0"	6.0"
	+/- 150 PSF		5.2"		6.0"	6.0"
	+/- 187.0 PSF		4.0"		4.7"	6.0"
96"	+/- 30 PSF	6.0"	6.0"	6.0"	6.0"	6.0"
	+/- 60 PSF	6.0"	6.0"	6.0"	6.0"	6.0"
	+/- 100 PSF	4.0"	6.0"	4.2"	6.0"	6.0"
	+/- 130 PSF		4.6"		5.6"	6.0"
	+/- 171.0 PSF		3.5"		4.1"	5.6"
108"	+/- 30 PSF	6.0"	6.0"	6.0"	6.0"	6.0"
	+/- 60 PSF	5.7"	6.0"	6.0"	6.0"	6.0"
	+/- 90 PSF	3.6"	5.9"	3.7"	6.0"	6.0"
	+/- 120 PSF		4.3"		4.9"	6.0"
	+/- 160.0 PSF		3.2"		3.6"	5.0"
120"	+/- 30 PSF	6.0"	6.0"	6.0"	6.0"	6.0"
	+/- 60 PSF	4.6"	6.0"	4.8"	6.0"	6.0"
	+/- 90 PSF		4.9"		5.6"	6.0"
	+/- 120 PSF		3.6"		4.1"	5.7"
	+/- 152.0 PSF				3.2"	4.5"
132"	+/- 30 PSF	6.0"	6.0"	6.0"	6.0"	6.0"
	+/- 50 PSF	4.6"	6.0"	5.0"	6.0"	6.0"
	+/- 80 PSF		4.6"		5.5"	6.0"
	+/- 110 PSF		3.4"		3.9"	5.4"
	+/- 145.4 PSF					4.1"
144"	+/- 20 PSF	6.0"	6.0"	6.0"	6.0"	6.0"
	+/- 50 PSF	4.1"	6.0"	4.2"	6.0"	6.0"
	+/- 80 PSF		4.2"		4.7"	6.0"
	+/- 110 PSF		3.0"		3.4"	4.6"
	+/- 140.0 PSF					3.7"

SLAT SPAN	DESIGN PRESSURE	MAXIMUM SPACING (O.C.): 5/16" 410 (DRILL POINT SCREW) SMS W/ FULL THREAD PENETRATION; TO 0.1875" MIN. 6061-T6 ALUM	5/16" 410 (DRILL POINT SCREW) SMS W/ FULL THREAD PENETRATION; TO 0.25" MIN. 6061-T6 ALUM	3/8" ELCO TAPFLEX W/ FULL THREAD PENETRATION; TO 0.25" MIN. 6061-T6 ALUM
156"	+/- 20 PSF	6.0"	6.0"	6.0"
	+/- 40 PSF	6.0"	6.0"	6.0"
	+/- 70 PSF	4.3"	4.8"	6.0"
	+/- 90 PSF	3.3"	3.7"	5.2"
	+/- 124.7 PSF			3.7"
168"	+/- 20 PSF	6.0"	6.0"	6.0"
	+/- 40 PSF	6.0"	6.0"	6.0"
	+/- 60 PSF	4.5"	5.0"	6.0"
	+/- 80 PSF	3.3"	3.7"	5.3"
	+/- 112.1 PSF			3.7"
180"	+/- 20 PSF	6.0"	6.0"	6.0"
	+/- 40 PSF	6.0"	6.0"	6.0"
	+/- 60 PSF	4.1"	4.5"	6.0"
	+/- 80 PSF	3.0"	3.4"	4.8"
	+/- 101.7 PSF			3.7"
192"	+/- 20 PSF	6.0"	6.0"	6.0"
	+/- 30 PSF	6.0"	6.0"	6.0"
	+/- 50 PSF	4.5"	4.9"	6.0"
	+/- 70 PSF	3.2"	3.5"	5.0"
	+/- 92.9 PSF			3.7"
204"	+/- 20 PSF	6.0"	6.0"	6.0"
	+/- 30 PSF	6.0"	6.0"	6.0"
	+/- 50 PSF	4.1"	4.5"	6.0"
	+/- 60 PSF	3.4"	3.7"	5.3"
	+/- 85.4 PSF			3.7"
216"	+/- 20 PSF	6.0"	6.0"	6.0"
	+/- 30 PSF	6.0"	6.0"	6.0"
	+/- 40 PSF	4.7"	5.2"	6.0"
	+/- 60 PSF	3.1"	3.4"	4.9"
	+/- 79.0 PSF			3.7"
228"	+/- 20 PSF	6.0"	6.0"	6.0"
	+/- 30 PSF	5.8"	6.0"	6.0"
	+/- 40 PSF	4.4"	4.8"	6.0"
	+/- 60 PSF		3.2"	4.5"
	+/- 73.4 PSF			3.7"
236"	+/- 20 PSF	6.0"	6.0"	6.0"
	+/- 30 PSF	5.6"	6.0"	6.0"
	+/- 40 PSF	4.1"	4.6"	6.0"
	+/- 50 PSF	3.3"	3.6"	5.2"
	+/- 70.0 PSF			3.7"

1. ▨ DESIGNATES ANCHOR CONDITIONS WHICH ARE NOT ACCEPTABLE FOR USE.

RICHARD NEET, P.E.
PE# 86488 CA# 9885

DECEMBER 22, 2023

FL

ENGINEERING EXPRESS®
POSTAL ADDRESS:
2234 NORTH FEDERAL HWY #7664
BOCA RATON, FL 33431
ENGINEERINGEXPRESS.COM

QUALITAS MANUFACTURING INC. (QMI)
1661 GLENLAKE AVE
ITASCA, IL 60143
PHONE: (866) 980-1750

QOMPACT3 - AL8 ROLL-UP HURRICANE SHUTTER (WALL & BUILD-OUT MOUNTS)
FBC EIGHTH EDITION (2023) | MIAMI-DADE NOA

REMARKS	DRWN	CHKD	DATE
PREV. SUB. NOA 22-0727.08	EPR	RWN	08/05/22
2023 FBC UPDATE	EPR	RWN	09/26/23
ADDRESSING MD COMMENTS	MRT	RWN	12/22/23

23-60247

SCALE: NTS UNLESS NOTED

06 OF 18

ANCHOR SCHEDULE: WALL MOUNT, SPANS 48"-144", 1/4"Ø FASTENERS

SLAT SPAN	DESIGN PRESSURE	Rx	Ry	1/4" HILTI KH-EZ	1/4" ALL-POINTS SOLID-SET	1/4" DEWALT ULTRACON+	1/4" DEWALT ULTRACON+ SS4	1/4" DEWALT POWER-BOLT	1/4" DEWALT SCREW BOLT+	1/4" DEWALT AGGRE-GATOR	1/4" DEWALT AGGRE-GATOR	1/4" DEWALT ULTRACON+	1/4" ALL-POINTS SOLID-SET	1/4" DEWALT ULTRACON+	1/4" DEWALT AGGRE-GATOR	1/4" DEWALT AGGRE-GATOR	#14 WOOD SCREW	#14 (410 SS) DRILL POINT SCREW OR 1/4-20 (410 SS) THRU-BOLT†	#14 (410 SS) DRILL POINT SCREW OR 1/4-20 (410 SS) THRU-BOLT†
				CONCRETE	CONCRETE	CONCRETE	CONCRETE	CONCRETE	GFB	GFB	GFB	GFB	HOLLOW BLOCK	HOLLOW BLOCK	HOLLOW BLOCK	HOLLOW BLOCK	WOOD	1/8" STEEL	1/8" ALUM.
				3000 PSI	3000 PSI	3000 PSI	3000	3000 PSI	ASTM C90	ASTM C90	ASTM C90	ASTM C90	ASTM C90	ASTM C90	ASTM C90	ASTM C90	G=0.55	A36	6063-T6
				EMBED: 2.50"	EMBED: 0.88"	EMBED: 1.75"	EMBED: 1.75"	EMBED: 2.50"	EMBED: 2.50"	EMBED: 2.00"	EMBED: 2.00"	EMBED: 1.25"	EMBED: 0.875"	EMBED: 1.25"	EMBED: 1.25"	EMBED: 1.25"	EMBED: 3.00"	-	-
				EDGE= 3.00"	EDGE= 3.00"	EDGE= 2.50"	EDGE= 2.50"	EDGE= 3.00"	EDGE= 3.00"	EDGE= 4.00"	EDGE= 2.00"	EDGE= 2.00"	EDGE= 3.00"	EDGE= 2.50"	EDGE= 4.00"	EDGE= 2.00"	EDGE= 1.00"	EDGE= 0.50"	EDGE= 0.50"
48"	+/- 160 PSF	0 LB/FT	320 LB/FT	6.0"	6.0"	6.0"	6.0"	6.0"	6.0"	6.0"	6.0"	6.0"	6.0"	6.0"	6.0"	6.0"	6.0"	6.0"	6.0"
	+/- 170 PSF	0 LB/FT	340 LB/FT	6.0"	6.0"	6.0"	6.0"	6.0"	6.0"	6.0"	6.0"	6.0"	6.0"	6.0"	6.0"	5.8"	6.0"	6.0"	6.0"
	+/- 180 PSF	0 LB/FT	360 LB/FT	6.0"	6.0"	6.0"	6.0"	6.0"	6.0"	6.0"	6.0"	5.8"	6.0"	5.8"	5.8"	5.5"	6.0"	6.0"	6.0"
	+/- 190 PSF	0 LB/FT	380 LB/FT	6.0"	6.0"	6.0"	6.0"	6.0"	6.0"	6.0"	6.0"	5.5"	6.0"	5.5"	5.5"	5.2"	6.0"	6.0"	6.0"
	+/- 200 PSF	0 LB/FT	400 LB/FT	6.0"	6.0"	6.0"	6.0"	6.0"	6.0"	6.0"	6.0"	5.3"	6.0"	5.3"	5.3"	5.0"	6.0"	6.0"	6.0"
	+/- 210 PSF	0 LB/FT	420 LB/FT	6.0"	6.0"	6.0"	6.0"	6.0"	6.0"	6.0"	6.0"	5.0"	6.0"	5.0"	5.0"	4.7"	6.0"	6.0"	6.0"
60"	+/- 110 PSF	9 LB/FT	275 LB/FT	6.0"	6.0"	6.0"	6.0"	6.0"	6.0"	6.0"	6.0"	6.0"	6.0"	6.0"	6.0"	6.0"	6.0"	6.0"	6.0"
	+/- 120 PSF	87 LB/FT	300 LB/FT	6.0"	6.0"	6.0"	6.0"	6.0"	6.0"	6.0"	6.0"	6.0"	6.0"	6.0"	5.6"	5.3"	6.0"	6.0"	6.0"
	+/- 130 PSF	165 LB/FT	325 LB/FT	6.0"	6.0"	6.0"	6.0"	6.0"	6.0"	6.0"	6.0"	4.9"	6.0"	4.9"	4.5"	4.3"	6.0"	6.0"	6.0"
	+/- 140 PSF	244 LB/FT	350 LB/FT	6.0"	6.0"	6.0"	6.0"	6.0"	6.0"	6.0"	6.0"	4.2"	6.0"	4.2"	3.8"	3.6"	6.0"	6.0"	6.0"
	+/- 150 PSF	322 LB/FT	375 LB/FT	6.0"	6.0"	6.0"	6.0"	6.0"	6.0"	6.0"	6.0"	3.7"	5.5"	3.7"	3.3"	3.1"	6.0"	6.0"	6.0"
	+/- 160 PSF	400 LB/FT	400 LB/FT	6.0"	6.0"	6.0"	6.0"	6.0"	6.0"	6.0"	5.8"	3.3"	4.7"	3.3"			6.0"	6.0"	6.0"
	+/- 170 PSF	479 LB/FT	425 LB/FT	6.0"	6.0"	6.0"	6.0"	6.0"	6.0"	5.8"	5.2"		4.2"				5.7"	6.0"	5.5"
72"	+/- 70 PSF	128 LB/FT	210 LB/FT	6.0"	6.0"	6.0"	6.0"	6.0"	6.0"	6.0"	6.0"	6.0"	6.0"	6.0"	6.0"	6.0"	6.0"	6.0"	6.0"
	+/- 80 PSF	232 LB/FT	240 LB/FT	6.0"	6.0"	6.0"	6.0"	6.0"	6.0"	6.0"	6.0"	5.5"	6.0"	5.5"	4.8"	4.6"	6.0"	6.0"	6.0"
	+/- 90 PSF	335 LB/FT	270 LB/FT	6.0"	6.0"	6.0"	6.0"	6.0"	6.0"	6.0"	6.0"	4.4"	6.0"	4.4"	3.8"	3.7"	6.0"	6.0"	6.0"
	+/- 100 PSF	438 LB/FT	300 LB/FT	6.0"	6.0"	6.0"	6.0"	6.0"	6.0"	6.0"	6.0"	3.7"	5.1"	3.7"	3.2"	3.0"	6.0"	6.0"	6.0"
	+/- 110 PSF	542 LB/FT	330 LB/FT	6.0"	6.0"	6.0"	6.0"	6.0"	6.0"	6.0"	5.5"	3.2"	4.4"	3.2"			5.8"	6.0"	6.0"
	+/- 120 PSF	645 LB/FT	360 LB/FT	6.0"	6.0"	5.6"	6.0"	5.7"	5.3"	5.3"	4.8"		3.8"				5.0"	6.0"	5.3"
	+/- 130 PSF	749 LB/FT	390 LB/FT	6.0"	5.9"	5.0"	5.3"	5.1"	4.7"	4.7"	4.3"		3.3"				4.4"	5.8"	4.7"
	+/- 140 PSF	852 LB/FT	420 LB/FT	6.0"	5.3"	4.4"	4.8"		4.2"	4.2"	3.9"						3.9"	5.2"	4.2"
84"	+/- 40 PSF	83 LB/FT	140 LB/FT	6.0"	6.0"	6.0"	6.0"	6.0"	6.0"	6.0"	6.0"	6.0"	6.0"	6.0"	6.0"	6.0"	6.0"	6.0"	6.0"
	+/- 50 PSF	214 LB/FT	175 LB/FT	6.0"	6.0"	6.0"	6.0"	6.0"	6.0"	6.0"	6.0"	6.0"	6.0"	6.0"	5.9"	5.7"	6.0"	6.0"	6.0"
	+/- 60 PSF	345 LB/FT	210 LB/FT	6.0"	6.0"	6.0"	6.0"	6.0"	6.0"	6.0"	6.0"	5.0"	6.0"	5.0"	4.2"	4.1"	6.0"	6.0"	6.0"
	+/- 70 PSF	475 LB/FT	245 LB/FT	6.0"	6.0"	6.0"	6.0"	6.0"	6.0"	6.0"	6.0"	3.9"	5.3"	3.9"	3.3"	3.2"	6.0"	6.0"	6.0"
	+/- 80 PSF	606 LB/FT	280 LB/FT	6.0"	6.0"	6.0"	6.0"	6.0"	5.9"	6.0"	5.6"	3.3"	4.3"	3.3"			5.6"	6.0"	6.0"
	+/- 90 PSF	737 LB/FT	315 LB/FT	6.0"	6.0"	5.3"	5.9"	5.6"	5.0"	5.1"	4.7"		3.6"				4.7"	6.0"	5.2"
	+/- 100 PSF	867 LB/FT	350 LB/FT	6.0"	5.5"	4.6"	5.1"		4.3"	4.4"	4.1"		3.1"				4.1"	5.4"	4.5"
	+/- 110 PSF	998 LB/FT	385 LB/FT	5.5"	4.8"	4.0"	4.5"		3.8"	3.9"	3.6"						3.6"	4.8"	4.0"
	+/- 120 PSF	1129 LB/FT	420 LB/FT	4.9"	4.3"	3.6"	4.0"		3.4"	3.5"	3.2"						3.2"	4.3"	3.6"
96"	+/- 30 PSF	143 LB/FT	120 LB/FT	6.0"	6.0"	6.0"	6.0"	6.0"	6.0"	6.0"	6.0"	6.0"	6.0"	6.0"	6.0"	6.0"	6.0"	6.0"	6.0"
	+/- 40 PSF	303 LB/FT	160 LB/FT	6.0"	6.0"	6.0"	6.0"	6.0"	6.0"	6.0"	6.0"	6.0"	6.0"	6.0"	5.1"	4.9"	6.0"	6.0"	6.0"
	+/- 50 PSF	463 LB/FT	200 LB/FT	6.0"	6.0"	6.0"	6.0"	6.0"	6.0"	6.0"	6.0"	4.4"	5.7"	4.4"	3.6"	3.5"	6.0"	6.0"	6.0"
	+/- 60 PSF	623 LB/FT	240 LB/FT	6.0"	6.0"	6.0"	6.0"	6.0"	6.0"	6.0"	5.8"	3.4"	4.4"	3.4"			5.7"	6.0"	6.0"
	+/- 70 PSF	783 LB/FT	280 LB/FT	6.0"	6.0"	5.2"	5.9"	5.6"	4.9"	5.1"	4.7"		3.6"				4.6"	6.0"	5.3"
	+/- 80 PSF	943 LB/FT	320 LB/FT	6.0"	5.3"	4.3"	5.0"		4.1"	4.3"	4.0"		3.0"				3.9"	5.3"	4.5"
	+/- 90 PSF	1103 LB/FT	360 LB/FT	5.2"	4.6"	3.7"	4.3"		3.5"	3.7"	3.5"						3.3"	4.5"	3.9"
	+/- 100 PSF	1263 LB/FT	400 LB/FT	4.5"	4.0"	3.3"	3.8"		3.1"	3.3"	3.1"						2.9"	4.0"	3.4"
108"	+/- 30 PSF	307 LB/FT	135 LB/FT	6.0"	6.0"	6.0"	6.0"	6.0"	6.0"	6.0"	6.0"	6.0"	6.0"	6.0"	5.4"	5.2"	6.0"	6.0"	6.0"
	+/- 40 PSF	498 LB/FT	180 LB/FT	6.0"	6.0"	6.0"	6.0"	6.0"	6.0"	6.0"	6.0"	4.4"	5.6"	4.4"	3.5"	3.4"	6.0"	6.0"	6.0"
	+/- 50 PSF	689 LB/FT	225 LB/FT	6.0"	6.0"	6.0"	6.0"	6.0"	5.7"	6.0"	5.6"	3.3"	4.2"	3.3"			5.4"	6.0"	6.0"
	+/- 60 PSF	880 LB/FT	270 LB/FT	6.0"	5.8"	4.7"	5.5"	5.2"	4.5"	4.7"	4.4"		3.3"				4.2"	5.8"	5.0"
	+/- 70.0 PSF	1072 LB/FT	315 LB/FT	5.4"	4.8"	3.9"	4.6"		3.7"	3.9"	3.7"						3.5"	4.8"	4.2"
	+/- 80.0 PSF	1263 LB/FT	360 LB/FT	4.6"	4.1"	3.4"	3.9"		3.2"	3.4"	3.2"						3.0"	4.1"	3.6"
	+/- 90.0 PSF	1454 LB/FT	405 LB/FT	4.0"	3.6"	2.9"	3.4"		2.8"	2.9"							2.6"	3.6"	3.1"
120"	+/- 30 PSF	456 LB/FT	150 LB/FT	6.0"	6.0"	6.0"	6.0"	6.0"	6.0"	6.0"	6.0"	4.9"	6.0"	4.9"	4.0"	3.8"	6.0"	6.0"	6.0"
	+/- 40 PSF	680 LB/FT	200 LB/FT	6.0"	6.0"	6.0"	6.0"	6.0"	5.8"	6.0"	5.8"	3.4"	4.3"	3.4"			5.5"	6.0"	6.0"
	+/- 50 PSF	905 LB/FT	250 LB/FT	6.0"	5.8"	4.7"	5.5"	5.2"	4.4"	4.7"	4.5"		3.3"				4.2"	5.8"	5.0"
	+/- 60 PSF	1129 LB/FT	300 LB/FT	5.2"	4.7"	3.8"	4.5"		3.6"	3.8"	3.6"						3.4"	4.7"	4.1"
	+/- 70.0 PSF	1353 LB/FT	350 LB/FT	4.4"	3.9"	3.2"	3.8"		3.0"	3.2"	3.0"						2.8"	3.9"	3.4"
	+/- 80.0 PSF	1578 LB/FT	400 LB/FT	3.5"	3.4"	2.7"	3.2"		2.6"	2.8"							2.5"	3.4"	3.0"
132"	+/- 30 PSF	598 LB/FT	165 LB/FT	6.0"	6.0"	6.0"	6.0"	6.0"	6.0"	6.0"	6.0"	4.0"	5.0"	4.0"	3.2"	3.1"	6.0"	6.0"	6.0"
	+/- 40 PSF	857 LB/FT	220 LB/FT	6.0"	6.0"	5.0"	5.9"	5.6"	4.8"	5.1"	4.8"		3.5"				4.5"	6.0"	5.4"
	+/- 50 PSF	1116 LB/FT	275 LB/FT	5.4"	4.8"	3.9"	4.6"		3.7"	4.0"	3.7"						3.5"	4.8"	4.2"
	+/- 60 PSF	1375 LB/FT	330 LB/FT	4.4"	3.9"	3.2"	3.8"		3.0"	3.2"	3.0"						2.8"	3.9"	3.5"
	+/- 70 PSF	1634 LB/FT	385 LB/FT	3.4"	3.3"	2.7"	3.2"		2.5"	2.7"							2.4"	3.3"	2.9"
144"	+/- 20 PSF	440 LB/FT	120 LB/FT	6.0"	6.0"	6.0"	6.0"	6.0"	6.0"	6.0"	6.0"	5.4"	6.0"	5.4"	4.3"	4.2"	6.0"	6.0"	6.0"
	+/- 30 PSF	735 LB/FT	180 LB/FT	6.0"	6.0"	5.9"	6.0"	6.0"	5.6"	6.0"	5.7"	3.4"	4.2"	3.4"			5.3"	6.0"	6.0"
	+/- 40 PSF	1031 LB/FT	240 LB/FT	5.8"	5.3"	4.2"	5.1"		4.0"	4.3"	4.1"						3.8"	5.3"	4.7"
	+/- 50 PSF	1326 LB/FT	300 LB/FT	4.6"	4.1"	3.3"	4.0"		3.1"	3.4"	3.2"						3.0"	4.1"	3.6"
	+/- 60 PSF	1622 LB/FT	360 LB/FT	3.5"	3.4"	2.7"	3.3"		2.6"	2.8"							2.4"	3.4"	3.0"
	+/- 70 PSF	1917 LB/FT	420 LB/FT			2.3"			2.2"	2.4"							2.1"	2.9"	2.5"

RICHARD NEET, P.E.
PE# 86488 CA# 9885

DECEMBER 22, 2023

RICHARD NEET LICENSE No. P.E. 86488 STATE OF FLORIDA PROFESSIONAL ENGINEER

FL

ANCHOR NOTES:

1. ANCHORS SHALL BE INSTALLED IN ACCORDANCE WITH MANUFACTURERS' RECOMMENDATIONS.
2. MINIMUM EMBEDMENT SHALL BE AS NOTED IN ANCHOR SCHEDULE. MINIMUM EMBEDMENT AND EDGE DISTANCE EXCLUDES STUCCO, FOAM, BRICK, AND OTHER WALL FINISHES.
3. ANCHOR SCHEDULE APPLIES TO ALL PRODUCTS CERTIFIED HEREIN, BUT ONLY PROVIDES MAXIMUM ALLOWABLE ANCHOR SPACING. MAXIMUM ALLOWABLE SPANS AND PRESSURES INDICATED IN SPAN SCHEDULE SHALL APPLY.
4. WHERE EXISTING STRUCTURE IS WOOD FRAMING, EXISTING CONDITIONS MAY VARY. FIELD VERIFY THAT FASTENERS ARE INTO ADEQUATE WOOD FRAMING MEMBERS, NOT INTO PLYWOOD.
5. WOOD BUCKS (BY OTHERS) SHALL BE ANCHORED PROPERLY TO TRANSFER LOADS TO THE EXISTING STRUCTURE.
6. MACHINE SCREWS SHALL HAVE MINIMUM OF 1/2" ENGAGEMENT OF THREADS IN BASE ANCHOR AND MAY HAVE EITHER A PAN HEAD, TRUSS HEAD, OR WAFER HEAD ("SIDEWALK BOLT") U.N.O.
7. SHEET METAL SCREWS SHALL BE INSTALLED WITH FULL ENGAGEMENT OF THREADS INTO METAL HOST STRUCTURE.
8. ▨ DESIGNATES ANCHOR CONDITIONS WHICH ARE NOT ACCEPTABLE FOR USE.
9. ANCHORS TO GROUT-FILLED BLOCK SHALL PENETRATE THROUGH FACE SHELL INTO GROUTED CELL.
10. † - #14 FASTENERS MAY BE SUBSTITUTED WITH 1/4" ELCO DRIL-FLEX FASTENERS.
11. SEE PAGE 18 FOR WALL MOUNT AND BUILD-OUT MOUNT REACTION KEY.

PRODUCT REVISED
as complying with the Florida Building Code
Acceptance No 23-1010.06
Expiration Date 08/25/2027
By Holly A. Miller
Miami Dade Product Control

ENGINEERING EXPRESS®
POSTAL ADDRESS:
2234 NORTH FEDERAL HWY #7664
BOCA RATON, FL 33431
ENGINEERINGEXPRESS.COM

QUALITAS MANUFACTURING INC. (QMI)
1661 GLENLAKE AVE
ITASCA, IL 60143
PHONE: (866) 980-1750

QOMPACT3 - AL8 ROLL-UP HURRICANE SHUTTER (WALL & BUILD-OUT MOUNTS)
FBC EIGHTH EDITION (2023) | MIAMI-DADE NOA

REMARKS	DRWN	CHKD	DATE
PREV. SUB. NOA 22-0727.08	EPR	RVWN	08/05/22
2023 FBC UPDATE	EPR	RVWN	09/26/23
ADDRESSING MD COMMENTS	MRT	RVWN	12/22/23

23-60247

SCALE: NTS UNLESS NOTED

ANCHOR SCHEDULE: WALL MOUNT, SPANS 156"-236", 1/4"Ø FASTENERS

SLAT SPAN	DESIGN PRESSURE	Rx	Ry	1/4" HILTI KH-EZ	1/4" ALL-POINTS SOLID-SET	1/4" DEWALT ULTRACON+	1/4" SS ITW TAPCON	1/4" DEWALT ULTRACON+ SS4	1/4" DEWALT POWER-BOLT	1/4" DEWALT SCREW BOLT+	1/4" DEWALT AGGRE-GATOR	1/4" DEWALT AGGRE-GATOR	1/4" DEWALT ULTRACON+	1/4" ALL-POINTS SOLID-SET	1/4" DEWALT AGGRE-GATOR	1/4" DEWALT AGGRE-GATOR	#14 WOOD SCREW	#14 (410 SS) DRILL POINT SCREW OR 1/4-20 (410 SS) THRU-BOLT	#14 (410 SS) DRILL POINT SCREW OR 1/4-20 (410 SS) THRU-BOLT
				CONCRETE	CONCRETE	CONCRETE	CONCRETE	CONCRETE	CONCRETE	GFB	GFB	GFB	GFB OR HOLLOW BLOCK	HOLLOW BLOCK	HOLLOW BLOCK	HOLLOW BLOCK	WOOD	STEEL	ALUM.
				3000 PSI	3000 PSI	3000 PSI	3192 PSI	3000	3000 PSI	ASTM C90	ASTM C90	ASTM C90	ASTM C90	ASTM C90	ASTM C90	ASTM C90	G=0.55	A36	6063-T6
				EMBED: 2.50"	EMBED: 0.88"	EMBED: 1.75"	EMBED: 1.75"	EMBED: 1.75"	EMBED: 2.50"	EMBED: 2.50"	EMBED: 2.00"	EMBED: 2.00"	EMBED: 1.25"	EMBED: 0.88"	EMBED: 1.25"	EMBED: 1.25"	EMBED: 3.00"	-	-
				EDGE= 3.00"	EDGE= 3.00"	EDGE= 2.50"	EDGE= 2.50"	EDGE= 2.50"	EDGE= 3.00"	EDGE= 3.00"	EDGE= 4.00"	EDGE= 2.00"	EDGE= 2.00"	EDGE= 3.00"	EDGE= 4.00"	EDGE= 2.00"	EDGE= 1.00"	EDGE= 0.50"	EDGE= 0.50"
156"	+/- 20 PSF	538 LB/FT	130 LB/FT	6.0"	6.0"	6.0"	6.0"	6.0"	6.0"	6.0"	6.0"	6.0"	4.6"	5.7"	3.6"	3.5"	6.0"	6.0"	6.0"
	+/- 30 PSF	871 LB/FT	195 LB/FT	6.0"	6.0"	5.0"	5.2"	6.0"	5.7"	4.8"	5.2"	4.9"		3.6"			4.5"	6.0"	5.6"
	+/- 40 PSF	1205 LB/FT	260 LB/FT	5.1"	4.6"	3.7"	3.8"	4.4"		3.5"	3.8"	3.6"					3.3"	4.6"	4.1"
	+/- 50 PSF	1538 LB/FT	325 LB/FT	3.7"	3.6"	2.9"		3.5"		2.7"	3.0"						2.6"	3.6"	3.2"
168"	+/- 20 PSF	635 LB/FT	140 LB/FT	6.0"	6.0"	6.0"	6.0"	6.0"	6.0"	6.0"	6.0"	6.0"	4.0"	4.9"	3.1"	3.0"	6.0"	6.0"	6.0"
	+/- 30 PSF	1007 LB/FT	210 LB/FT	6.0"	5.5"	4.4"	4.6"	5.3"	5.0"	4.2"	4.5"	4.3"		3.1"			4.0"	5.5"	4.9"
	+/- 40 PSF	1380 LB/FT	280 LB/FT	4.4"	4.1"	3.2"	3.4"	3.9"		3.1"	3.3"	3.2"					2.9"	4.0"	3.6"
	+/- 46 PSF	1604 LB/FT	322 LB/FT	3.6"	3.5"	2.8"		3.4"		2.6"	2.9"						2.5"	3.5"	3.1"
180"	+/- 10 PSF	317 LB/FT	75 LB/FT	6.0"	6.0"	6.0"	6.0"	6.0"	6.0"	6.0"	6.0"	6.0"	6.0"	6.0"	6.0"	6.0"	6.0"	6.0"	6.0"
	+/- 20 PSF	731 LB/FT	150 LB/FT	6.0"	6.0"	6.0"	6.0"	6.0"	6.0"	5.8"	6.0"	6.0"	3.6"	4.3"			5.5"	6.0"	6.0"
	+/- 30 PSF	1144 LB/FT	225 LB/FT	5.4"	4.9"	3.9"	4.1"	4.7"		3.7"	4.0"	3.8"					3.5"	4.9"	4.4"
	+/- 40 PSF	1558 LB/FT	300 LB/FT	3.7"	3.6"	2.9"	3.0"	3.5"		2.7"	3.0"						2.6"	3.6"	3.2"
	+/- 43 PSF	1682 LB/FT	323 LB/FT	3.4"	3.4"	2.7"		3.2"		2.5"	2.8"						2.4"	3.3"	3.0"
192"	+/- 10 PSF	371 LB/FT	80 LB/FT	6.0"	6.0"	6.0"	6.0"	6.0"	6.0"	6.0"	6.0"	6.0"	6.0"	6.0"	5.4"	5.2"	6.0"	6.0"	6.0"
	+/- 20 PSF	827 LB/FT	160 LB/FT	6.0"	6.0"	5.4"	5.7"	6.0"	6.0"	5.1"	5.6"	5.3"	3.2"	3.9"			4.9"	6.0"	6.0"
	+/- 30 PSF	1283 LB/FT	240 LB/FT	4.8"	4.4"	3.5"	3.7"	4.3"		3.3"	3.6"	3.5"					3.1"	4.4"	4.0"
	+/- 40 PSF	1739 LB/FT	320 LB/FT	3.3"	3.3"	2.6"		3.2"		2.5"	2.7"						2.3"	3.3"	2.9"
204"	+/- 10 PSF	424 LB/FT	85 LB/FT	6.0"	6.0"	6.0"	6.0"	6.0"	6.0"	6.0"	6.0"	6.0"	6.0"	6.0"	4.8"	4.6"	6.0"	6.0"	6.0"
	+/- 20 PSF	924 LB/FT	170 LB/FT	6.0"	6.0"	4.9"	5.1"	6.0"	5.6"	4.6"	5.1"	4.8"		3.5"			4.4"	6.0"	5.5"
	+/- 30 PSF	1423 LB/FT	255 LB/FT	4.4"	4.0"	3.2"	3.3"	3.9"		3.0"	3.3"	3.1"					2.9"	4.0"	3.6"
	+/- 38 PSF	1823 LB/FT	323 LB/FT	3.2"	3.1"	2.5"		3.0"		2.4"	2.6"						2.2"	3.1"	2.8"
216"	+/- 10 PSF	477 LB/FT	90 LB/FT	6.0"	6.0"	6.0"	6.0"	6.0"	6.0"	6.0"	6.0"	6.0"	5.6"	6.0"	4.3"	4.2"	6.0"	6.0"	6.0"
	+/- 20 PSF	1022 LB/FT	180 LB/FT	6.0"	5.6"	4.4"	4.6"	5.4"	5.1"	4.2"	4.6"	4.4"		3.2"			4.0"	5.6"	5.1"
	+/- 30 PSF	1566 LB/FT	270 LB/FT	3.7"	3.7"	2.9"	3.0"	3.6"		2.7"	3.0"						2.6"	3.7"	3.3"
	+/- 36 PSF	1893 LB/FT	324 LB/FT	3.1"	3.0"	2.4"				2.3"	2.5"						2.2"	3.0"	2.8"
228"	+/- 10 PSF	530 LB/FT	95 LB/FT	6.0"	6.0"	6.0"	6.0"	6.0"	6.0"	6.0"	6.0"	6.0"	5.1"	6.0"	3.9"	3.8"	6.0"	6.0"	6.0"
	+/- 20 PSF	1121 LB/FT	190 LB/FT	5.6"	5.1"	4.1"	4.3"	5.0"		3.8"	4.2"	4.0"					3.6"	5.1"	4.7"
	+/- 30 PSF	1712 LB/FT	285 LB/FT	3.4"	3.4"	2.7"		3.3"		2.5"	2.8"						2.4"	3.4"	3.1"
	+/- 34 PSF	1948 LB/FT	323 LB/FT	3.0"		2.3"				2.2"	2.4"						2.1"	3.0"	2.7"
236"	+/- 10 PSF	566 LB/FT	98 LB/FT	6.0"	6.0"	6.0"	6.0"	6.0"	6.0"	6.0"	6.0"	6.0"	4.8"	5.7"	3.7"	3.6"	6.0"	6.0"	6.0"
	+/- 20 PSF	1188 LB/FT	197 LB/FT	5.3"	4.9"	3.8"	4.0"	4.7"		3.6"	4.0"	3.8"					3.4"	4.9"	4.4"
	+/- 30 PSF	1810 LB/FT	295 LB/FT	3.2"	3.2"	2.5"		3.1"		2.4"	2.6"						2.3"	3.2"	2.9"
	+/- 33 PSF	1997 LB/FT	325 LB/FT			2.3"				2.2"	2.4"						2.1"	2.9"	2.6"

ANCHOR NOTES:

1. ANCHORS SHALL BE INSTALLED IN ACCORDANCE WITH MANUFACTURERS' RECOMMENDATIONS.
2. MINIMUM EMBEDMENT SHALL BE AS NOTED IN ANCHOR SCHEDULE. MINIMUM EMBEDMENT AND EDGE DISTANCE EXCLUDES STUCCO, FOAM, BRICK, AND OTHER WALL FINISHES.
3. ANCHOR SCHEDULE APPLIES TO ALL PRODUCTS CERTIFIED HEREIN, BUT ONLY PROVIDES MAXIMUM ALLOWABLE ANCHOR SPACING. MAXIMUM ALLOWABLE SPANS AND PRESSURES INDICATED IN SPAN SCHEDULE SHALL APPLY.
4. WHERE EXISTING STRUCTURE IS WOOD FRAMING, EXISTING CONDITIONS MAY VARY. FIELD VERIFY THAT FASTENERS ARE INTO ADEQUATE WOOD FRAMING MEMBERS, NOT INTO PLYWOOD.
5. WOOD BUCKS (BY OTHERS) SHALL BE ANCHORED PROPERLY TO TRANSFER LOADS TO THE EXISTING STRUCTURE.
6. MACHINE SCREWS SHALL HAVE MINIMUM OF 1/2" ENGAGEMENT OF THREADS IN BASE ANCHOR AND MAY HAVE EITHER A PAN HEAD, TRUSS HEAD, OR WAFER HEAD ("SIDEWALK BOLT") U.N.O.
7. SHEET METAL SCREWS SHALL BE INSTALLED WITH FULL ENGAGEMENT OF THREADS INTO METAL HOST STRUCTURE.
8. DESIGNATES ANCHOR CONDITIONS WHICH ARE NOT ACCEPTABLE FOR USE.
9. ANCHORS TO GROUT-FILLED BLOCK SHALL PENETRATE THROUGH FACE SHELL INTO GROUTED CELL.
10. † - #14 FASTENERS MAY BE SUBSTITUTED WITH 1/4" ELCO DRIL-FLEX FASTENERS.
11. SEE PAGE 18 FOR WALL MOUNT AND BUILD-OUT MOUNT REACTION KEY.

PRODUCT REVISED
as complying with the Florida
Building Code
Acceptance No. 23-1010.06
Expiration Date 08/25/2027
By Hedy A. Mahr
Miami Dade Product Control

RICHARD NEET, P.E.
PE# 86488 CA# 9885

DECEMBER 22, 2023

FL

ENGINEERING EXPRESS®
POSTAL ADDRESS:
2234 NORTH FEDERAL HWY #7664
BOCA RATON, FL 33431
ENGINEERINGEXPRESS.COM

QUALITAS MANUFACTURING INC. (QMI)
1661 GLENLAKE AVE
ITASCA, IL 60143
PHONE: (866) 980-1750

QOMPACT3 - AL8 ROLL-UP HURRICANE SHUTTER
(WALL & BUILD-OUT MOUNTS)
FBC EIGHTH EDITION (2023) | MIAMI-DADE NOA

REMARKS	DRWN	CHKD	DATE
PREV. SUB. NOA 22-0727.08	EPR	RVWN	08/05/22
2023 FBC UPDATE	EPR	RVWN	09/26/23
ADDRESSING MD COMMENTS	MRT	RVWN	12/22/23

23-60247

SCALE: NTS UNLESS NOTED

08 OF 18

ANCHOR SCHEDULE: WALL MOUNT, SPANS 48"-108", ≥5/16"Ø FASTENERS

SLAT SPAN	DESIGN PRESSURE	Rx	Rv	3/8" ELCO / DEWALT CONFLEX	3/8" DEWALT SCREW BOLT+	3/8" ELCO / DEWALT CONFLEX	3/8" DEWALT SCREW BOLT+	3/8" HILTI KH-EZ	3/8" HILTI KH-EZ	5/16" DEWALT ULTRACON	3/8" DEWALT SCREW BOLT+	5/16" ITW TAPCON XL	5/16" ITW TAPCON XL	3/8" ELCO TAPFLEX	5/16" ELCO DRIL-FLEX	5/16" (410 SS) DRILL POINT SCREW	5/16" (410 SS) DRILL POINT SCREW	#20 (0.32") WOOD SCREW
				CONCRETE	CONCRETE	CONCRETE	CONCRETE	CONCRETE	CONCRETE	CONCRETE	GFB	GFB	HOLLOW BLOCK	1/4" ALUM. OR STEEL	1/4" STEEL	1/4" STEEL	1/4" ALUM.	WOOD
				4510 PSI	3000 PSI	1819 PSI	3000 PSI	3000 PSI	3000 PSI	3500 PSI	ASTM C90	ASTM C90	ASTM C90	6061-T6 OR A36	A36	A36	6063-T6	G=0.55
				EMBED: 3.50"	EMBED: 3.25"	EMBED: 3.50"	EMBED: 3.25"	EMBED: 3.25"	EMBED: 3.25"	EMBED: 2.00"	EMBED: 3.25"	EMBED: 2.25"	EMBED: 1.75"	-	-	-	-	EMBED: 4.00"
				EDGE= 3.75"	EDGE= 5.00"	EDGE= 3.75"	EDGE= 4.00"	EDGE= 5.00"	EDGE= 4.00"	EDGE= 3.13"	EDGE= 5.00"	EDGE= 4.00"	EDGE= 4.00"	EDGE= 0.75"	EDGE= 0.75"	EDGE= 0.75"	EDGE= 0.63"	EDGE= 1.50"
48"	+/- 246.7 PSF	53 LB/FT	493 LB/FT	6.0"	6.0"	6.0"	6.0"	6.0"	6.0"	6.0"	6.0"	6.0"	6.0"	6.0"	6.0"	6.0"	6.0"	6.0"
60"	+/- 140 PSF	244 LB/FT	350 LB/FT	6.0"	6.0"	6.0"	6.0"	6.0"	6.0"	6.0"	6.0"	6.0"	6.0"	6.0"	6.0"	6.0"	6.0"	6.0"
	+/- 150 PSF	322 LB/FT	375 LB/FT	6.0"	6.0"	6.0"	6.0"	6.0"	6.0"	6.0"	6.0"	6.0"	6.0"	6.0"	6.0"	6.0"	6.0"	6.0"
	+/- 160 PSF	400 LB/FT	400 LB/FT	6.0"	6.0"	6.0"	6.0"	6.0"	6.0"	6.0"	6.0"	6.0"	5.4"	6.0"	6.0"	6.0"	6.0"	6.0"
	+/- 170 PSF	479 LB/FT	425 LB/FT	6.0"	6.0"	6.0"	6.0"	6.0"	6.0"	6.0"	6.0"	6.0"	4.9"	6.0"	6.0"	6.0"	6.0"	6.0"
	+/- 180 PSF	557 LB/FT	450 LB/FT	6.0"	6.0"	6.0"	6.0"	6.0"	6.0"	6.0"	6.0"	6.0"	4.4"	6.0"	6.0"	6.0"	6.0"	6.0"
	+/- 190 PSF	635 LB/FT	475 LB/FT	6.0"	6.0"	6.0"	6.0"	6.0"	6.0"	6.0"	6.0"	6.0"	4.1"	6.0"	6.0"	6.0"	6.0"	5.3"
	+/- 200 PSF	714 LB/FT	500 LB/FT	6.0"	6.0"	6.0"	6.0"	6.0"	6.0"	5.7"	6.0"	6.0"	3.8"	6.0"	6.0"	6.0"	6.0"	4.8"
	+/- 210.0 PSF	792 LB/FT	525 LB/FT	6.0"	6.0"	6.0"	6.0"	6.0"	6.0"	5.3"	6.0"	6.0"		6.0"	6.0"	6.0"	6.0"	4.3"
	+/- 214.3 PSF	826 LB/FT	536 LB/FT	6.0"	6.0"	6.0"	6.0"	6.0"	6.0"	5.1"	6.0"	6.0"		6.0"	6.0"	6.0"	6.0"	4.2"
72"	+/- 100 PSF	438 LB/FT	300 LB/FT	6.0"	6.0"	6.0"	6.0"	6.0"	6.0"	6.0"	6.0"	6.0"	6.0"	6.0"	6.0"	6.0"	6.0"	6.0"
	+/- 110 PSF	542 LB/FT	330 LB/FT	6.0"	6.0"	6.0"	6.0"	6.0"	6.0"	6.0"	6.0"	6.0"	5.4"	6.0"	6.0"	6.0"	6.0"	6.0"
	+/- 120 PSF	645 LB/FT	360 LB/FT	6.0"	6.0"	6.0"	6.0"	6.0"	6.0"	6.0"	6.0"	6.0"	4.8"	6.0"	6.0"	6.0"	6.0"	5.5"
	+/- 130 PSF	749 LB/FT	390 LB/FT	6.0"	6.0"	6.0"	6.0"	6.0"	6.0"	6.0"	6.0"	6.0"	4.3"	6.0"	6.0"	6.0"	6.0"	4.8"
	+/- 140 PSF	852 LB/FT	420 LB/FT	6.0"	6.0"	6.0"	6.0"	6.0"	6.0"	5.7"	6.0"	6.0"	3.9"	6.0"	6.0"	6.0"	6.0"	4.2"
	+/- 150 PSF	955 LB/FT	450 LB/FT	6.0"	6.0"	6.0"	6.0"	6.0"	6.0"	5.1"	6.0"	6.0"		6.0"	6.0"	6.0"	6.0"	3.8"
	+/- 160 PSF	1059 LB/FT	480 LB/FT	6.0"	6.0"	6.0"	6.0"	6.0"	6.0"	4.7"	6.0"	6.0"		6.0"	6.0"	6.0"	6.0"	3.4"
	+/- 170 PSF	1162 LB/FT	510 LB/FT	6.0"	6.0"	6.0"	6.0"	6.0"	6.0"	4.4"	6.0"	5.9"		6.0"	6.0"	6.0"	6.0"	3.1"
	+/- 180 PSF	1266 LB/FT	540 LB/FT	6.0"	6.0"	6.0"	6.0"	6.0"	6.0"	4.0"	5.6"	5.5"		6.0"	6.0"	6.0"	6.0"	2.9"
	+/- 190 PSF	1369 LB/FT	570 LB/FT	6.0"	6.0"	6.0"	6.0"	6.0"	6.0"	3.8"	5.2"	5.1"		6.0"	6.0"	6.0"	6.0"	2.7"
	+/- 200 PSF	1472 LB/FT	600 LB/FT	6.0"	6.0"	6.0"	5.9"	6.0"	6.0"		4.9"	4.8"		6.0"	6.0"	6.0"	6.0"	2.5"
	+/- 210.0 PSF	1576 LB/FT	630 LB/FT	6.0"	6.0"	6.0"	5.5"	6.0"	5.8"		4.6"	4.5"		6.0"	6.0"	6.0"	6.0"	2.3"
	+/- 213.3 PSF	1610 LB/FT	640 LB/FT	6.0"	6.0"	6.0"	5.4"	6.0"	5.7"		4.5"	4.4"		6.0"	6.0"	6.0"	5.9"	2.3"
84"	+/- 70 PSF	475 LB/FT	245 LB/FT	6.0"	6.0"	6.0"	6.0"	6.0"	6.0"	6.0"	6.0"	6.0"	6.0"	6.0"	6.0"	6.0"	6.0"	6.0"
	+/- 80 PSF	606 LB/FT	280 LB/FT	6.0"	6.0"	6.0"	6.0"	6.0"	6.0"	6.0"	6.0"	6.0"	5.6"	6.0"	6.0"	6.0"	6.0"	6.0"
	+/- 90 PSF	737 LB/FT	315 LB/FT	6.0"	6.0"	6.0"	6.0"	6.0"	6.0"	6.0"	6.0"	6.0"	4.8"	6.0"	6.0"	6.0"	6.0"	5.0"
	+/- 100 PSF	867 LB/FT	350 LB/FT	6.0"	6.0"	6.0"	6.0"	6.0"	6.0"	6.0"	6.0"	6.0"	4.2"	6.0"	6.0"	6.0"	6.0"	4.2"
	+/- 110 PSF	998 LB/FT	385 LB/FT	6.0"	6.0"	6.0"	6.0"	6.0"	6.0"	5.3"	6.0"	6.0"		6.0"	6.0"	6.0"	6.0"	3.7"
	+/- 120 PSF	1129 LB/FT	420 LB/FT	6.0"	6.0"	6.0"	6.0"	6.0"	6.0"	4.8"	6.0"	6.0"		6.0"	6.0"	6.0"	6.0"	3.3"
	+/- 130 PSF	1259 LB/FT	455 LB/FT	6.0"	6.0"	6.0"	6.0"	6.0"	6.0"	4.3"	5.8"	5.7"		6.0"	6.0"	6.0"	6.0"	2.9"
	+/- 140 PSF	1390 LB/FT	490 LB/FT	6.0"	6.0"	6.0"	6.0"	6.0"	6.0"	4.0"	5.3"	5.2"		6.0"	6.0"	6.0"	6.0"	2.7"
	+/- 150 PSF	1521 LB/FT	525 LB/FT	6.0"	6.0"	6.0"	5.9"	6.0"	6.0"		4.9"	4.8"		6.0"	6.0"	6.0"	6.0"	2.5"
	+/- 160 PSF	1652 LB/FT	560 LB/FT	6.0"	6.0"	6.0"	5.4"	6.0"	5.7"		4.5"	4.4"		6.0"	6.0"	6.0"	6.0"	2.3"
	+/- 170 PSF	1782 LB/FT	595 LB/FT	6.0"	6.0"	6.0"	5.1"	6.0"	5.3"		4.2"	4.1"		6.0"	6.0"	6.0"	5.6"	
	+/- 180 PSF	1913 LB/FT	630 LB/FT	6.0"	5.7"	6.0"	4.7"	6.0"	5.0"		3.9"	3.9"		6.0"	5.8"	5.8"	5.2"	
	+/- 187 PSF	2004 LB/FT	655 LB/FT	6.0"	5.4"	6.0"	4.5"	6.0"	4.8"		3.7"			6.0"	5.5"	5.5"	5.0"	
96"	+/- 50 PSF	463 LB/FT	200 LB/FT	6.0"	6.0"	6.0"	6.0"	6.0"	6.0"	6.0"	6.0"	6.0"	6.0"	6.0"	6.0"	6.0"	6.0"	6.0"
	+/- 60 PSF	623 LB/FT	240 LB/FT	6.0"	6.0"	6.0"	6.0"	6.0"	6.0"	6.0"	6.0"	6.0"	6.0"	6.0"	6.0"	6.0"	6.0"	5.9"
	+/- 70 PSF	783 LB/FT	280 LB/FT	6.0"	6.0"	6.0"	6.0"	6.0"	6.0"	6.0"	6.0"	6.0"	4.9"	6.0"	6.0"	6.0"	6.0"	4.7"
	+/- 80 PSF	943 LB/FT	320 LB/FT	6.0"	6.0"	6.0"	6.0"	6.0"	6.0"	5.9"	6.0"	6.0"	4.2"	6.0"	6.0"	6.0"	6.0"	4.0"
	+/- 90 PSF	1103 LB/FT	360 LB/FT	6.0"	6.0"	6.0"	6.0"	6.0"	6.0"	5.1"	6.0"	6.0"		6.0"	6.0"	6.0"	6.0"	3.4"
	+/- 100 PSF	1263 LB/FT	400 LB/FT	6.0"	6.0"	6.0"	6.0"	6.0"	6.0"	4.5"	6.0"	5.9"		6.0"	6.0"	6.0"	6.0"	3.0"
	+/- 110 PSF	1423 LB/FT	440 LB/FT	6.0"	6.0"	6.0"	6.0"	6.0"	6.0"	4.0"	5.3"	5.3"		6.0"	6.0"	6.0"	6.0"	2.6"
	+/- 120 PSF	1583 LB/FT	480 LB/FT	6.0"	6.0"	6.0"	5.8"	6.0"	6.0"		4.8"	4.8"		6.0"	6.0"	6.0"	6.0"	2.4"
	+/- 130 PSF	1743 LB/FT	520 LB/FT	6.0"	6.0"	6.0"	5.3"	6.0"	5.5"		4.4"	4.3"		6.0"	6.0"	6.0"	5.9"	
	+/- 140 PSF	1903 LB/FT	560 LB/FT	6.0"	5.8"	6.0"	4.8"	6.0"	5.1"		4.0"	4.0"		6.0"	6.0"	6.0"	5.4"	
	+/- 150 PSF	2063 LB/FT	600 LB/FT	6.0"	5.4"	6.0"	4.5"	6.0"	4.7"		3.7"			6.0"	5.5"	5.5"	5.0"	
	+/- 160 PSF	2223 LB/FT	640 LB/FT	6.0"	5.0"	6.0"	4.2"	5.9"	4.4"		3.5"			6.0"	5.1"	5.1"	4.7"	
	+/- 171 PSF	2399 LB/FT	684 LB/FT	6.0"	4.7"	6.0"	3.6"	5.4"	4.1"		3.2"			6.0"	4.8"	4.8"	4.3"	
108"	+/- 40 PSF	498 LB/FT	180 LB/FT	6.0"	6.0"	6.0"	6.0"	6.0"	6.0"	6.0"	6.0"	6.0"	6.0"	6.0"	6.0"	6.0"	6.0"	6.0"
	+/- 50 PSF	689 LB/FT	225 LB/FT	6.0"	6.0"	6.0"	6.0"	6.0"	6.0"	6.0"	6.0"	6.0"	5.8"	6.0"	6.0"	6.0"	6.0"	5.4"
	+/- 60 PSF	880 LB/FT	270 LB/FT	6.0"	6.0"	6.0"	6.0"	6.0"	6.0"	6.0"	6.0"	6.0"	4.7"	6.0"	6.0"	6.0"	6.0"	4.3"
	+/- 70.0 PSF	1072 LB/FT	315 LB/FT	6.0"	6.0"	6.0"	6.0"	6.0"	6.0"	5.5"	6.0"	6.0"	3.9"	6.0"	6.0"	6.0"	6.0"	3.5"
	+/- 80.0 PSF	1263 LB/FT	360 LB/FT	6.0"	6.0"	6.0"	6.0"	6.0"	6.0"	4.7"	6.0"	6.0"		6.0"	6.0"	6.0"	6.0"	3.0"
	+/- 90.0 PSF	1454 LB/FT	405 LB/FT	6.0"	6.0"	6.0"	6.0"	6.0"	6.0"	4.1"	5.3"	5.3"		6.0"	6.0"	6.0"	6.0"	2.6"
	+/- 100.0 PSF	1645 LB/FT	450 LB/FT	6.0"	6.0"	6.0"	5.7"	6.0"	6.0"		4.7"	4.7"		6.0"	6.0"	6.0"	6.0"	2.3"
	+/- 110.0 PSF	1837 LB/FT	495 LB/FT	6.0"	6.0"	6.0"	5.1"	6.0"	5.3"		4.2"	4.2"		6.0"	6.0"	6.0"	5.7"	
	+/- 120.0 PSF	2028 LB/FT	540 LB/FT	6.0"	5.6"	6.0"	4.6"	6.0"	4.8"		3.8"	3.8"		6.0"	5.7"	5.7"	5.2"	
	+/- 130.0 PSF	2219 LB/FT	585 LB/FT	6.0"	5.1"	6.0"	4.2"	6.0"	4.4"		3.5"			6.0"	5.2"	5.2"	4.8"	
	+/- 140.0 PSF	2410 LB/FT	630 LB/FT	6.0"	4.7"	6.0"	3.6"	5.5"	4.1"		3.2"			6.0"	4.8"	4.8"	4.4"	
	+/- 150.0 PSF	2602 LB/FT	675 LB/FT	6.0"	4.4"	6.0"	3.4"	5.1"	3.6"		3.0"			6.0"	4.5"	4.5"	4.1"	
	+/- 160.0 PSF	2793 LB/FT	720 LB/FT	6.0"	4.1"		3.1"	4.8"	3.3"					5.7"	4.2"	4.2"	3.8"	

RICHARD NEET, P.E.
PE# 86488 CA# 9885

DECEMBER 22, 2023

FL

ANCHOR NOTES:

1. ANCHORS SHALL BE INSTALLED IN ACCORDANCE WITH MANUFACTURERS' RECOMMENDATIONS.
2. MINIMUM EMBEDMENT SHALL BE AS NOTED IN ANCHOR SCHEDULE. MINIMUM EMBEDMENT AND EDGE DISTANCE EXCLUDES STUCCO, FOAM, BRICK, AND OTHER WALL FINISHES.
3. ANCHOR SCHEDULE APPLIES TO ALL PRODUCTS CERTIFIED HEREIN, BUT ONLY PROVIDES MAXIMUM ALLOWABLE ANCHOR SPACING. MAXIMUM ALLOWABLE SPANS AND PRESSURES INDICATED IN SPAN SCHEDULE SHALL APPLY.
4. WHERE EXISTING STRUCTURE IS WOOD FRAMING, EXISTING CONDITIONS MAY VARY. FIELD VERIFY THAT FASTENERS ARE INTO ADEQUATE WOOD FRAMING MEMBERS, NOT INTO PLYWOOD.
5. WOOD BUCKS (BY OTHERS) SHALL BE ANCHORED PROPERLY TO TRANSFER LOADS TO THE EXISTING STRUCTURE.
6. MACHINE SCREWS SHALL HAVE MINIMUM OF 1/2" ENGAGEMENT OF THREADS IN BASE ANCHOR AND MAY HAVE EITHER A PAN HEAD, TRUSS HEAD, OR WAFER HEAD ("SIDEWALK BOLT") U.N.O.
7. SHEET METAL SCREWS SHALL BE INSTALLED WITH FULL ENGAGEMENT OF THREADS INTO METAL HOST STRUCTURE.
8. ▬ DESIGNATES ANCHOR CONDITIONS WHICH ARE NOT ACCEPTABLE FOR USE.
9. ANCHORS TO GROUT-FILLED BLOCK SHALL PENETRATE THROUGH FACE SHELL INTO GROUTED CELL.
10. † - #14 FASTENERS MAY BE SUBSTITUTED WITH 1/4" ELCO DRIL-FLEX FASTENERS.
11. SEE PAGE 18 FOR WALL MOUNT AND BUILD-OUT MOUNT REACTION KEY.

PRODUCT REVISED
as complying with the Florida
Building Code
Acceptance No 23-1010.06
Expiration Date 08/25/2027
By
Miami Dade Product Control

ENGINEERING EXPRESS®
POSTAL ADDRESS:
2234 NORTH FEDERAL HWY #7664
BOCA RATON, FL 33431
ENGINEERINGEXPRESS.COM

QUALITAS MANUFACTURING INC. (QMI)
1661 GLENLAKE AVE
ITASCA, IL 60143
PHONE: (866) 980-1750

QOMPACT3 - AL8 ROLL-UP HURRICANE SHUTTER
(WALL & BUILD-OUT MOUNTS)
FBC EIGHTH EDITION (2023) | MIAMI-DADE NOA

REMARKS	DRWN	CHKD	DATE
PREV. SUB. NOA 22-0727.08	EPR	RWN	08/05/22
2023 FBC UPDATE	EPR	RWN	09/26/23
ADDRESSING MD COMMENTS	MRT	RWN	12/22/23

23-60247

SCALE: NTS UNLESS NOTED

ANCHOR SCHEDULE: WALL MOUNT, SPANS 120"-144", ≥5/16"Ø FASTENERS

SLAT SPAN	DESIGN PRESSURE	Rx	Ry	3/8" ELCO / DEWALT CONFLEX	3/8" DEWALT SCREW BOLT+	3/8" ELCO / DEWALT CONFLEX	3/8" DEWALT SCREW BOLT+	3/8" HILTI KH-EZ	3/8" HILTI KH-EZ	5/16" DEWALT ULTRACON	3/8" DEWALT SCREW BOLT+	5/16" ITW TAPCON XL	5/16" ITW TAPCON XL	3/8" ELCO TAPFLEX	5/16" ELCO DRIL-FLEX	5/16" (410 SS) DRILL POINT SCREW	5/16" (410 SS) DRILL POINT SCREW	#20 (0.32") WOOD SCREW
				CONCRETE	CONCRETE	CONCRETE	CONCRETE	CONCRETE	CONCRETE	CONCRETE	GFB	GFB	HOLLOW BLOCK	1/4" ALUM. OR STEEL	1/4" STEEL	1/4" STEEL	1/4" ALUM.	WOOD
				4510 PSI	3000 PSI	1819 PSI	3000 PSI	3000 PSI	3000 PSI	3500 PSI	ASTM C90	ASTM C90	ASTM C90	6061-T6 OR A36	A36	A36	6063-T6	G=0.55
				EMBED: 3.50"	EMBED: 3.25"	EMBED: 3.50"	EMBED: 3.25"	EMBED: 3.25"	EMBED: 3.25"	EMBED: 2.00"	EMBED: 3.25"	EMBED: 2.25"	EMBED: 1.75"	-	-	-	-	EMBED: 4.00"
				EDGE= 3.75"	EDGE= 5.00"	EDGE= 3.75"	EDGE= 4.00"	EDGE= 5.00"	EDGE= 4.00"	EDGE= 3.13"	EDGE= 5.00"	EDGE= 4.00"	EDGE= 4.00"	EDGE= 0.75"	EDGE= 0.75"	EDGE= 0.75"	EDGE= 0.63"	EDGE= 1.50"
120"	+/- 30 PSF	456 LB/FT	150 LB/FT	6.0"	6.0"	6.0"	6.0"	6.0"	6.0"	6.0"	6.0"	6.0"	6.0"	6.0"	6.0"	6.0"	6.0"	6.0"
	+/- 40 PSF	680 LB/FT	200 LB/FT	6.0"	6.0"	6.0"	6.0"	6.0"	6.0"	6.0"	6.0"	6.0"	6.0"	6.0"	6.0"	6.0"	6.0"	5.6"
	+/- 50 PSF	905 LB/FT	250 LB/FT	6.0"	6.0"	6.0"	6.0"	6.0"	6.0"	6.0"	6.0"	6.0"	4.7"	6.0"	6.0"	6.0"	6.0"	4.2"
	+/- 60 PSF	1129 LB/FT	300 LB/FT	6.0"	6.0"	6.0"	6.0"	6.0"	6.0"	5.3"	6.0"	6.0"	3.8"	6.0"	6.0"	6.0"	6.0"	3.4"
	+/- 70.0 PSF	1353 LB/FT	350 LB/FT	6.0"	6.0"	6.0"	6.0"	6.0"	6.0"	4.5"	5.8"	5.7"		6.0"	6.0"	6.0"	6.0"	2.8"
	+/- 80.0 PSF	1578 LB/FT	400 LB/FT	6.0"	6.0"	6.0"	6.0"	6.0"	6.0"	3.9"	5.0"	4.9"		6.0"	6.0"	6.0"	6.0"	2.4"
	+/- 90.0 PSF	1802 LB/FT	450 LB/FT	6.0"	6.0"	6.0"	5.2"	6.0"	5.5"		4.4"	4.3"		6.0"	6.0"	6.0"	5.9"	
	+/- 100.0 PSF	2026 LB/FT	500 LB/FT	6.0"	5.6"	6.0"	4.7"	6.0"	4.9"		3.9"	3.9"		6.0"	5.8"	5.8"	5.3"	
	+/- 110.0 PSF	2250 LB/FT	550 LB/FT	6.0"	5.1"	6.0"	4.2"	6.0"	4.4"		3.5"			6.0"	5.2"	5.3"	4.8"	
	+/- 120.0 PSF	2475 LB/FT	600 LB/FT	6.0"	4.6"	6.0"	3.6"	5.4"	4.0"		3.2"			6.0"	4.8"	4.8"	4.3"	
	+/- 130.0 PSF	2699 LB/FT	650 LB/FT	6.0"	4.2"	6.0"	3.3"	5.0"	3.5"					6.0"	4.4"	4.4"	4.0"	
	+/- 140.0 PSF	2923 LB/FT	700 LB/FT	6.0"	3.7"		3.0"	4.6"	3.2"					5.5"	4.0"	4.1"	3.7"	
	+/- 150.0 PSF	3148 LB/FT	750 LB/FT	6.0"	3.4"			4.3"						5.1"	3.8"	3.8"	3.4"	
	+/- 152.0 PSF	3192 LB/FT	760 LB/FT	6.0"	3.4"			4.2"						5.1"	3.7"	3.7"	3.4"	
132"	+/- 30 PSF	598 LB/FT	165 LB/FT	6.0"	6.0"	6.0"	6.0"	6.0"	6.0"	6.0"	6.0"	6.0"	6.0"	6.0"	6.0"	6.0"	6.0"	6.0"
	+/- 40 PSF	857 LB/FT	220 LB/FT	6.0"	6.0"	6.0"	6.0"	6.0"	6.0"	6.0"	6.0"	6.0"	5.1"	6.0"	6.0"	6.0"	6.0"	4.5"
	+/- 50 PSF	1116 LB/FT	275 LB/FT	6.0"	6.0"	6.0"	6.0"	6.0"	6.0"	5.5"	6.0"	6.0"	4.0"	6.0"	6.0"	6.0"	6.0"	3.4"
	+/- 60 PSF	1375 LB/FT	330 LB/FT	6.0"	6.0"	6.0"	6.0"	6.0"	6.0"	4.5"	5.8"	5.7"		6.0"	6.0"	6.0"	6.0"	2.8"
	+/- 70 PSF	1634 LB/FT	385 LB/FT	6.0"	6.0"	6.0"	5.8"	6.0"	6.0"	3.8"	4.9"	4.8"		6.0"	6.0"	6.0"	6.0"	2.4"
	+/- 80 PSF	1893 LB/FT	440 LB/FT	6.0"	6.0"	6.0"	5.0"	6.0"	5.3"		4.2"	4.2"		6.0"	6.0"	6.0"	5.7"	
	+/- 90 PSF	2152 LB/FT	495 LB/FT	6.0"	5.4"	6.0"	4.4"	6.0"	4.7"		3.7"			6.0"	5.5"	5.6"	5.0"	
	+/- 100 PSF	2411 LB/FT	550 LB/FT	6.0"	4.8"	6.0"	3.7"	5.6"	4.2"		3.3"			6.0"	4.9"	5.0"	4.5"	
	+/- 110 PSF	2670 LB/FT	605 LB/FT	6.0"	4.3"	6.0"	3.3"	5.1"	3.6"					6.0"	4.5"	4.5"	4.1"	
	+/- 120 PSF	2929 LB/FT	660 LB/FT	6.0"	3.7"		3.1"	4.7"	3.2"					5.6"	4.1"	4.1"	3.7"	
	+/- 130 PSF	3188 LB/FT	715 LB/FT	6.0"	3.4"			4.3"						5.1"	3.7"	3.8"	3.4"	
	+/- 140 PSF	3447 LB/FT	770 LB/FT	6.0"	3.1"			3.7"						4.8"	3.5"	3.5"	3.2"	
	+/- 145 PSF	3587 LB/FT	800 LB/FT		3.0"			3.6"						4.6"	3.3"	3.3"	3.0"	
144"	+/- 20 PSF	440 LB/FT	120 LB/FT	6.0"	6.0"	6.0"	6.0"	6.0"	6.0"	6.0"	6.0"	6.0"	6.0"	6.0"	6.0"	6.0"	6.0"	6.0"
	+/- 30 PSF	735 LB/FT	180 LB/FT	6.0"	6.0"	6.0"	6.0"	6.0"	6.0"	6.0"	6.0"	6.0"	6.0"	6.0"	6.0"	6.0"	6.0"	5.2"
	+/- 40 PSF	1031 LB/FT	240 LB/FT	6.0"	6.0"	6.0"	6.0"	6.0"	6.0"	6.0"	6.0"	6.0"	4.4"	6.0"	6.0"	6.0"	6.0"	3.7"
	+/- 50 PSF	1326 LB/FT	300 LB/FT	6.0"	6.0"	6.0"	6.0"	6.0"	6.0"	4.7"	6.0"	6.0"		6.0"	6.0"	6.0"	6.0"	2.9"
	+/- 60 PSF	1622 LB/FT	360 LB/FT	6.0"	6.0"	6.0"	5.9"	6.0"	6.0"	3.9"	4.9"	4.9"		6.0"	6.0"	6.0"	6.0"	2.4"
	+/- 70 PSF	1917 LB/FT	420 LB/FT	6.0"	6.0"	6.0"	5.0"	6.0"	5.3"		4.2"	4.2"		6.0"	6.0"	6.0"	5.7"	
	+/- 80 PSF	2213 LB/FT	480 LB/FT	6.0"	5.2"	6.0"	4.3"	6.0"	4.6"		3.6"			6.0"	5.4"	5.5"	4.9"	
	+/- 90 PSF	2508 LB/FT	540 LB/FT	6.0"	4.6"	6.0"	3.6"	5.5"	4.0"		3.2"			6.0"	4.8"	4.8"	4.4"	
	+/- 100 PSF	2803 LB/FT	600 LB/FT	6.0"	4.1"	6.0"	3.2"	4.9"	3.4"					5.9"	4.3"	4.3"	3.9"	
	+/- 110 PSF	3099 LB/FT	660 LB/FT	6.0"	3.5"			4.4"	3.1"					5.4"	3.9"	3.9"	3.5"	
	+/- 120 PSF	3394 LB/FT	720 LB/FT	6.0"	3.2"			4.1"						4.9"	3.5"	3.6"	3.2"	
	+/- 130 PSF	3690 LB/FT	780 LB/FT					3.5"						4.5"	3.3"	3.3"		
	+/- 140.0 PSF	3985 LB/FT	840 LB/FT					3.3"						4.2"	3.0"	3.0"		

ANCHOR NOTES:

1. ANCHORS SHALL BE INSTALLED IN ACCORDANCE WITH MANUFACTURERS' RECOMMENDATIONS.
2. MINIMUM EMBEDMENT SHALL BE AS NOTED IN ANCHOR SCHEDULE. MINIMUM EMBEDMENT AND EDGE DISTANCE EXCLUDES STUCCO, FOAM, BRICK, AND OTHER WALL FINISHES.
3. ANCHOR SCHEDULE APPLIES TO ALL PRODUCTS CERTIFIED HEREIN, BUT ONLY PROVIDES MAXIMUM ALLOWABLE ANCHOR SPACING. MAXIMUM ALLOWABLE SPANS AND PRESSURES INDICATED IN SPAN SCHEDULE SHALL APPLY.
4. WHERE EXISTING STRUCTURE IS WOOD FRAMING, EXISTING CONDITIONS MAY VARY. FIELD VERIFY THAT FASTENERS ARE INTO ADEQUATE WOOD FRAMING MEMBERS, NOT INTO PLYWOOD.
5. WOOD BUCKS (BY OTHERS) SHALL BE ANCHORED PROPERLY TO TRANSFER LOADS TO THE EXISTING STRUCTURE.
6. MACHINE SCREWS SHALL HAVE MINIMUM OF 1/2" ENGAGEMENT OF THREADS IN BASE ANCHOR AND MAY HAVE EITHER A PAN HEAD, TRUSS HEAD, OR WAFER HEAD ("SIDEWALK BOLT") U.N.O.
7. SHEET METAL SCREWS SHALL BE INSTALLED WITH FULL ENGAGEMENT OF THREADS INTO METAL HOST STRUCTURE.
8. ▨ DESIGNATES ANCHOR CONDITIONS WHICH ARE NOT ACCEPTABLE FOR USE.
9. ANCHORS TO GROUT-FILLED BLOCK SHALL PENETRATE THROUGH FACE SHELL INTO GROUTED CELL.
10. † - #14 FASTENERS MAY BE SUBSTITUTED WITH 1/4" ELCO DRIL-FLEX FASTENERS.
11. SEE PAGE 18 FOR WALL MOUNT AND BUILD-OUT MOUNT REACTION KEY.

PRODUCT REVISED
as complying with the Florida Building Code
Acceptance No 23-1010.06
Expiration Date 05/25/2027
By
Miami Dade Product Control

RICHARD NEET, P.E.
PE# 86488 CA# 9885
DECEMBER 22, 2023
FL
ENGINEERING EXPRESS®
POSTAL ADDRESS:
2234 NORTH FEDERAL HWY #7664
BOCA RATON, FL 33431
ENGINEERINGEXPRESS.COM

QUALITAS MANUFACTURING INC. (QMI)
1661 GLENLAKE AVE
ITASCA, IL 60143
PHONE: (866) 980-1750

QOMPACT3 - AL8 ROLL-UP HURRICANE SHUTTER
(WALL & BUILD-OUT MOUNTS)
FBC EIGHTH EDITION (2023) | MIAMI-DADE NOA

REMARKS	DRWN	CHKD	DATE
PREV. SUB. NOA 22-0727.08	EPR	RWN	08/05/22
2023 FBC UPDATE	EPR	RWN	09/26/23
ADDRESSING MD COMMENTS	MRT	RWN	12/22/23

23-60247

SCALE: NTS UNLESS NOTED

ANCHOR SCHEDULE: WALL MOUNT, SPANS 156"-180", ≥5/16"Ø FASTENERS

ANCHOR NOTES:

1. ANCHORS SHALL BE INSTALLED IN ACCORDANCE WITH MANUFACTURERS' RECOMMENDATIONS.
2. MINIMUM EMBEDMENT SHALL BE AS NOTED IN ANCHOR SCHEDULE. MINIMUM EMBEDMENT AND EDGE DISTANCE EXCLUDES STUCCO, FOAM, BRICK, AND OTHER WALL FINISHES.
3. ANCHOR SCHEDULE APPLIES TO ALL PRODUCTS CERTIFIED HEREIN, BUT ONLY PROVIDES MAXIMUM ALLOWABLE ANCHOR SPACING. MAXIMUM ALLOWABLE SPANS AND PRESSURES INDICATED IN SPAN SCHEDULE SHALL APPLY.
4. WHERE EXISTING STRUCTURE IS WOOD FRAMING, EXISTING CONDITIONS MAY VARY. FIELD VERIFY THAT FASTENERS ARE INTO ADEQUATE WOOD FRAMING MEMBERS, NOT INTO PLYWOOD.
5. WOOD BUCKS (BY OTHERS) SHALL BE ANCHORED PROPERLY TO TRANSFER LOADS TO THE EXISTING STRUCTURE.
6. MACHINE SCREWS SHALL HAVE MINIMUM OF 1/2" ENGAGEMENT OF THREADS IN BASE ANCHOR AND MAY HAVE EITHER A PAN HEAD, TRUSS HEAD, OR WAFER HEAD ("SIDEWALK BOLT") U.N.O.
7. SHEET METAL SCREWS SHALL BE INSTALLED WITH FULL ENGAGEMENT OF THREADS INTO METAL HOST STRUCTURE.
8. DESIGNATES ANCHOR CONDITIONS WHICH ARE NOT ACCEPTABLE FOR USE.
9. ANCHORS TO GROUT-FILLED BLOCK SHALL PENETRATE THROUGH FACE SHELL INTO GROUTED CELL.
10. † - #14 FASTENERS MAY BE SUBSTITUTED WITH 1/4" ELCO DRIL-FLEX FASTENERS.
11. SEE PAGE 18 FOR WALL MOUNT AND BUILD-OUT MOUNT REACTION KEY.

PRODUCT REVISED
as complying with the Florida
Building Code
Acceptance No 23-1010.06
Expiration Date 08/25/2027
By
Miami Dade Product Control

SLAT SPAN	DESIGN PRESSURE	Rx	Ry	3/8" ELCO / DEWALT CONFLEX	3/8" DEWALT SCREW BOLT+	3/8" ELCO / DEWALT CONFLEX	3/8" DEWALT SCREW BOLT+	3/8" HILTI KH-EZ	3/8" HILTI KH-EZ	5/16" DEWALT ULTRACON	3/8" DEWALT SCREW BOLT+	5/16" ITW TAPCON XL	5/16" ITW TAPCON XL	3/8" ELCO TAPFLEX	5/16" ELCO DRIL-FLEX	5/16" (410 SS) DRILL POINT SCREW	5/16" (410 SS) DRILL POINT SCREW	#20 (0.32") WOOD SCREW
				CONCRETE	CONCRETE	CONCRETE	CONCRETE	CONCRETE	CONCRETE	CONCRETE	GFB	GFB	HOLLOW BLOCK	1/4" ALUM. OR STEEL	1/4" STEEL	1/4" STEEL	1/4" ALUM.	WOOD
				4510 PSI	3000 PSI	1819 PSI	3000 PSI	3000 PSI	3000 PSI	3500 PSI	ASTM C90	ASTM C90	ASTM C90	6061-T6 OR A36	A36	A36	6063-T6	G=0.55
				EMBED: 3.50"	EMBED: 3.25"	EMBED: 3.50"	EMBED: 3.25"	EMBED: 3.25"	EMBED: 3.25"	EMBED: 2.00"	EMBED: 3.25"	EMBED: 2.25"	EMBED: 1.75"	-	-	-	-	EMBED: 4.00"
				EDGE= 3.75"	EDGE= 5.00"	EDGE= 3.75"	EDGE= 4.00"	EDGE= 5.00"	EDGE= 4.00"	EDGE= 3.13"	EDGE= 5.00"	EDGE= 4.00"	EDGE= 4.00"	EDGE= 0.75"	EDGE= 0.75"	EDGE= 0.75"	EDGE= 0.63"	EDGE= 1.50"
156"	+/- 20 PSF	538 LB/FT	130 LB/FT	6.0"	6.0"	6.0"	6.0"	6.0"	6.0"	6.0"	6.0"	6.0"	6.0"	6.0"	6.0"	6.0"	6.0"	6.0"
	+/- 30 PSF	871 LB/FT	195 LB/FT	6.0"	6.0"	6.0"	6.0"	6.0"	6.0"	6.0"	6.0"	6.0"	5.3"	6.0"	6.0"	6.0"	6.0"	4.4"
	+/- 40 PSF	1205 LB/FT	260 LB/FT	6.0"	6.0"	6.0"	6.0"	6.0"	6.0"	5.3"	6.0"	6.0"	3.9"	6.0"	6.0"	6.0"	6.0"	3.2"
	+/- 50 PSF	1538 LB/FT	325 LB/FT	6.0"	6.0"	6.0"	6.0"	6.0"	6.0"	4.2"	5.3"	5.2"		6.0"	6.0"	6.0"	6.0"	2.5"
	+/- 60 PSF	1872 LB/FT	390 LB/FT	6.0"	6.0"	6.0"	5.2"	6.0"	5.4"		4.3"	4.3"		6.0"	6.0"	6.0"	5.9"	
	+/- 70 PSF	2205 LB/FT	455 LB/FT	6.0"	5.3"	6.0"	4.4"	6.0"	4.6"		3.7"			6.0"	5.5"	5.5"	5.0"	
	+/- 75 PSF	2372 LB/FT	488 LB/FT	6.0"	4.9"	6.0"	4.1"	5.8"	4.3"		3.4"			6.0"	5.1"	5.1"	4.7"	
	+/- 80 PSF	2538 LB/FT	520 LB/FT	6.0"	4.6"	6.0"	3.6"	5.4"	4.0"		3.2"			6.0"	4.8"	4.8"	4.4"	
	+/- 90 PSF	2872 LB/FT	585 LB/FT	6.0"	4.1"	6.0"	3.2"	4.8"	3.3"					5.8"	4.2"	4.2"	3.9"	
	+/- 100 PSF	3205 LB/FT	650 LB/FT	6.0"	3.4"			4.3"						5.2"	3.8"	3.8"	3.5"	
	+/- 105 PSF	3372 LB/FT	683 LB/FT	6.0"	3.3"			4.1"						5.0"	3.6"	3.6"	3.3"	
	+/- 110 PSF	3539 LB/FT	715 LB/FT	6.0"	3.1"			3.7"						4.7"	3.4"	3.5"	3.1"	
	+/- 120 PSF	3872 LB/FT	780 LB/FT					3.4"						4.3"	3.1"	3.2"		
	+/- 124.7 PSF	4029 LB/FT	811 LB/FT					3.2"						4.2"	3.0"	3.0"		
168"	+/- 20 PSF	635 LB/FT	140 LB/FT	6.0"	6.0"	6.0"	6.0"	6.0"	6.0"	6.0"	6.0"	6.0"	6.0"	6.0"	6.0"	6.0"	6.0"	6.0"
	+/- 30 PSF	1007 LB/FT	210 LB/FT	6.0"	6.0"	6.0"	6.0"	6.0"	6.0"	6.0"	6.0"	6.0"	4.7"	6.0"	6.0"	6.0"	6.0"	3.8"
	+/- 40 PSF	1380 LB/FT	280 LB/FT	6.0"	6.0"	6.0"	6.0"	6.0"	6.0"	4.7"	5.9"	5.8"		6.0"	6.0"	6.0"	6.0"	2.8"
	+/- 50 PSF	1753 LB/FT	350 LB/FT	6.0"	6.0"	6.0"	5.5"	6.0"	5.8"		4.6"	4.6"		6.0"	6.0"	6.0"	6.0"	
	+/- 60 PSF	2126 LB/FT	420 LB/FT	6.0"	5.5"	6.0"	4.6"	6.0"	4.8"		3.8"	3.8"		6.0"	5.7"	5.8"	5.2"	
	+/- 65 PSF	2312 LB/FT	455 LB/FT	6.0"	5.1"	6.0"	4.2"	6.0"	4.4"		3.5"			6.0"	5.3"	5.3"	4.8"	
	+/- 70 PSF	2499 LB/FT	490 LB/FT	6.0"	4.7"	6.0"	3.6"	5.6"	4.1"		3.3"			6.0"	4.9"	4.9"	4.5"	
	+/- 80 PSF	2872 LB/FT	560 LB/FT	6.0"	4.1"	6.0"	3.2"	4.9"	3.4"					5.9"	4.2"	4.3"	3.9"	
	+/- 90 PSF	3244 LB/FT	630 LB/FT	6.0"	3.4"			4.3"						5.2"	3.8"	3.8"	3.4"	
	+/- 95 PSF	3431 LB/FT	665 LB/FT	6.0"	3.2"			4.1"						4.9"	3.6"	3.6"	3.3"	
	+/- 100 PSF	3617 LB/FT	700 LB/FT		3.0"			3.6"						4.7"	3.4"	3.4"	3.1"	
	+/- 110 PSF	3990 LB/FT	770 LB/FT					3.3"						4.2"	3.1"	3.1"		
	+/- 112.1 PSF	4068 LB/FT	785 LB/FT					3.2"						4.2"	3.0"	3.0"		
180"	+/- 10 PSF	317 LB/FT	75 LB/FT	6.0"	6.0"	6.0"	6.0"	6.0"	6.0"	6.0"	6.0"	6.0"	6.0"	6.0"	6.0"	6.0"	6.0"	6.0"
	+/- 20 PSF	731 LB/FT	150 LB/FT	6.0"	6.0"	6.0"	6.0"	6.0"	6.0"	6.0"	6.0"	6.0"	6.0"	6.0"	6.0"	6.0"	6.0"	5.3"
	+/- 30 PSF	1144 LB/FT	225 LB/FT	6.0"	6.0"	6.0"	6.0"	6.0"	6.0"	5.7"	6.0"	6.0"	4.2"	6.0"	6.0"	6.0"	6.0"	3.4"
	+/- 40 PSF	1558 LB/FT	300 LB/FT	6.0"	6.0"	6.0"	6.0"	6.0"	6.0"	4.2"	5.3"	5.2"		6.0"	6.0"	6.0"	6.0"	2.5"
	+/- 50 PSF	1972 LB/FT	375 LB/FT	6.0"	6.0"	6.0"	4.9"	6.0"	5.2"		4.2"	4.1"		6.0"	6.0"	6.0"	5.7"	
	+/- 54 PSF	2137 LB/FT	405 LB/FT	6.0"	5.5"	6.0"	4.6"	6.0"	4.8"		3.8"	3.8"		6.0"	5.7"	5.8"	5.2"	
	+/- 60 PSF	2386 LB/FT	450 LB/FT	6.0"	4.9"	6.0"	4.1"	5.9"	4.3"		3.4"			6.0"	5.1"	5.2"	4.7"	
	+/- 70 PSF	2799 LB/FT	525 LB/FT	6.0"	4.2"	6.0"	3.3"	5.0"	3.5"					6.0"	4.4"	4.4"	4.0"	
	+/- 80 PSF	3213 LB/FT	600 LB/FT	6.0"	3.4"			4.4"	3.0"					5.3"	3.8"	3.8"	3.5"	
	+/- 85 PSF	3420 LB/FT	638 LB/FT	6.0"	3.2"			4.1"						5.0"	3.6"	3.6"	3.3"	
	+/- 90 PSF	3627 LB/FT	675 LB/FT		3.1"			3.6"						4.7"	3.4"	3.4"	3.1"	
	+/- 100 PSF	4040 LB/FT	750 LB/FT					3.3"						4.2"	3.0"	3.1"		
	+/- 101.7 PSF	4111 LB/FT	763 LB/FT					3.2"						4.1"		3.0"		

RICHARD NEET, P.E.
PE# 86488 CA# 9885

DECEMBER 22, 2023

FL

ENGINEERING EXPRESS®
POSTAL ADDRESS:
2234 NORTH FEDERAL HWY #7664
BOCA RATON, FL 33431
ENGINEERINGEXPRESS.COM

QUALITAS MANUFACTURING INC. (QMI)
1661 GLENLAKE AVE
ITASCA, IL 60143
PHONE: (866) 980-1750

QOMPACT3 - AL8 ROLL-UP HURRICANE SHUTTER
(WALL & BUILD-OUT MOUNTS)
FBC EIGHTH EDITION (2023) | MIAMI-DADE NOA

REMARKS	DRWN	CHKD	DATE
PREV. SUB. NOA 22-0727.08	EPR	RWN	08/05/22
2023 FBC UPDATE	EPR	RWN	09/26/23
ADDRESSING MD COMMENTS	MRT	RWN	12/22/23
-	-	-	-
-	-	-	-

23-60247

SCALE: NTS UNLESS NOTED

ANCHOR SCHEDULE: WALL MOUNT, SPANS 192"-236", ≥5/16"Ø FASTENERS

SLAT SPAN	DESIGN PRESSURE	Rx	Ry	3/8" ELCO / DEWALT CONFLEX	3/8" DEWALT SCREW BOLT+	3/8" ELCO / DEWALT CONFLEX	3/8" DEWALT SCREW BOLT+	3/8" HILTI KH-EZ	3/8" HILTI KH-EZ	5/16" DEWALT ULTRACON	3/8" DEWALT SCREW BOLT+	5/16" ITW TAPCON XL	5/16" ITW TAPCON XL	3/8" ELCO TAPFLEX	5/16" ELCO DRIL-FLEX	5/16" (410 SS) DRILL POINT SCREW	5/16" (410 SS) DRILL POINT SCREW	#20 (0.32") WOOD SCREW
				CONCRETE	CONCRETE	CONCRETE	CONCRETE	CONCRETE	CONCRETE	CONCRETE	GFB	GFB	HOLLOW BLOCK	1/4" ALUM. OR STEEL	1/4" STEEL	1/4" STEEL	1/4" ALUM.	WOOD
				4510 PSI	3000 PSI	1819 PSI	3000 PSI	3000 PSI	3000 PSI	3500 PSI	ASTM C90	ASTM C90	ASTM C90	6061-T6 OR A36	A36	A36	6063-T6	G=0.55
				EMBED: 3.50"	EMBED: 3.25"	EMBED: 3.50"	EMBED: 3.25"	EMBED: 3.25"	EMBED: 3.25"	EMBED: 2.00"	EMBED: 3.25"	EMBED: 2.25"	EMBED: 1.75"	-	-	-	-	EMBED: 4.00"
				EDGE= 3.75"	EDGE= 5.00"	EDGE= 3.75"	EDGE= 4.00"	EDGE= 5.00"	EDGE= 4.00"	EDGE= 3.13"	EDGE= 5.00"	EDGE= 4.00"	EDGE= 4.00"	EDGE= 0.75"	EDGE= 0.75"	EDGE= 0.75"	EDGE= 0.63"	EDGE= 1.50"
192"	+/- 10 PSF	371 LB/FT	80 LB/FT	6.0"	6.0"	6.0"	6.0"	6.0"	6.0"	6.0"	6.0"	6.0"	6.0"	6.0"	6.0"	6.0"	6.0"	6.0"
	+/- 20 PSF	827 LB/FT	160 LB/FT	6.0"	6.0"	6.0"	6.0"	6.0"	6.0"	6.0"	6.0"	6.0"	5.8"	6.0"	6.0"	6.0"	6.0"	4.7"
	+/- 30 PSF	1283 LB/FT	240 LB/FT	6.0"	6.0"	6.0"	6.0"	6.0"	6.0"	5.1"	6.0"	6.0"	3.8"	6.0"	6.0"	6.0"	6.0"	3.0"
	+/- 40 PSF	1739 LB/FT	320 LB/FT	6.0"	6.0"	6.0"	5.6"	6.0"	5.9"	3.8"	4.7"	4.7"		6.0"	6.0"	6.0"	6.0"	2.2"
	+/- 50 PSF	2195 LB/FT	400 LB/FT	6.0"	5.4"	6.0"	4.5"	6.0"	4.7"		3.8"			6.0"	5.6"	5.7"	5.1"	
	+/- 55 PSF	2423 LB/FT	440 LB/FT	6.0"	4.9"	6.0"	4.0"	5.8"	4.2"		3.4"			6.0"	5.1"	5.1"	4.7"	
	+/- 60 PSF	2651 LB/FT	480 LB/FT	6.0"	4.5"	6.0"	3.5"	5.3"	3.7"		3.1"			6.0"	4.6"	4.7"	4.3"	
	+/- 70 PSF	3107 LB/FT	560 LB/FT	6.0"	3.6"			4.5"	3.1"					5.5"	4.0"	4.0"	3.6"	
	+/- 75 PSF	3335 LB/FT	600 LB/FT	6.0"	3.3"			4.2"						5.1"	3.7"	3.7"	3.4"	
	+/- 80 PSF	3563 LB/FT	640 LB/FT	6.0"	3.1"			3.7"						4.8"	3.5"	3.5"	3.2"	
	+/- 90 PSF	4019 LB/FT	720 LB/FT					3.3"						4.3"	3.1"	3.1"		
	+/- 92.9 PSF	4151 LB/FT	743 LB/FT					3.2"						4.1"				
204"	+/- 10 PSF	424 LB/FT	85 LB/FT	6.0"	6.0"	6.0"	6.0"	6.0"	6.0"	6.0"	6.0"	6.0"	6.0"	6.0"	6.0"	6.0"	6.0"	6.0"
	+/- 20 PSF	924 LB/FT	170 LB/FT	6.0"	6.0"	6.0"	6.0"	6.0"	6.0"	6.0"	6.0"	6.0"	5.3"	6.0"	6.0"	6.0"	6.0"	4.2"
	+/- 30 PSF	1423 LB/FT	255 LB/FT	6.0"	6.0"	6.0"	6.0"	6.0"	6.0"	4.7"	5.8"	5.8"		6.0"	6.0"	6.0"	6.0"	2.7"
	+/- 40 PSF	1923 LB/FT	340 LB/FT	6.0"	6.0"	6.0"	5.1"	6.0"	5.4"		4.3"	4.3"		6.0"	6.0"	6.0"	5.9"	
	+/- 50 PSF	2423 LB/FT	425 LB/FT	6.0"	4.9"	6.0"	4.1"	5.8"	4.3"		3.4"			6.0"	5.1"	5.2"	4.7"	
	+/- 55 PSF	2673 LB/FT	468 LB/FT	6.0"	4.5"	6.0"	3.4"	5.3"	3.7"		3.1"			6.0"	4.6"	4.7"	4.2"	
	+/- 60 PSF	2922 LB/FT	510 LB/FT	6.0"	4.1"	6.0"	3.2"	4.8"	3.3"					5.9"	4.2"	4.3"	3.9"	
	+/- 70 PSF	3422 LB/FT	595 LB/FT	6.0"	3.3"			4.1"						5.0"	3.6"	3.7"	3.3"	
	+/- 75 PSF	3672 LB/FT	638 LB/FT		3.0"			3.6"						4.7"	3.4"	3.4"	3.1"	
	+/- 80 PSF	3922 LB/FT	680 LB/FT					3.4"						4.4"	3.2"	3.2"		
	+/- 85.4 PSF	4192 LB/FT	726 LB/FT					3.2"						4.1"				
216"	+/- 10 PSF	477 LB/FT	90 LB/FT	6.0"	6.0"	6.0"	6.0"	6.0"	6.0"	6.0"	6.0"	6.0"	6.0"	6.0"	6.0"	6.0"	6.0"	6.0"
	+/- 20 PSF	1022 LB/FT	180 LB/FT	6.0"	6.0"	6.0"	6.0"	6.0"	6.0"	6.0"	6.0"	6.0"	4.8"	6.0"	6.0"	6.0"	6.0"	3.8"
	+/- 30 PSF	1566 LB/FT	270 LB/FT	6.0"	6.0"	6.0"	6.0"	6.0"	6.0"	4.3"	5.3"	5.3"		6.0"	6.0"	6.0"	6.0"	2.5"
	+/- 40 PSF	2111 LB/FT	360 LB/FT	6.0"	5.7"	6.0"	4.7"	6.0"	4.9"		3.9"	3.9"		6.0"	5.9"	5.9"	5.4"	
	+/- 41 PSF	2165 LB/FT	369 LB/FT	6.0"	5.5"	6.0"	4.6"	6.0"	4.8"		3.8"	3.8"		6.0"	5.7"	5.8"	5.3"	
	+/- 50 PSF	2656 LB/FT	450 LB/FT	6.0"	4.5"	6.0"	3.5"	5.3"	3.7"		3.1"			6.0"	4.7"	4.7"	4.3"	
	+/- 60 PSF	3200 LB/FT	540 LB/FT	6.0"	3.5"			4.4"	3.1"					5.4"	3.9"	3.9"	3.6"	
	+/- 70 PSF	3745 LB/FT	630 LB/FT					3.6"						4.6"	3.3"	3.4"	3.0"	
	+/- 75 PSF	4017 LB/FT	675 LB/FT					3.3"						4.3"	3.1"	3.1"		
	+/- 79 PSF	4235 LB/FT	711 LB/FT					3.2"						4.1"				
228"	+/- 10 PSF	530 LB/FT	95 LB/FT	6.0"	6.0"	6.0"	6.0"	6.0"	6.0"	6.0"	6.0"	6.0"	6.0"	6.0"	6.0"	6.0"	6.0"	6.0"
	+/- 20 PSF	1121 LB/FT	190 LB/FT	6.0"	6.0"	6.0"	6.0"	6.0"	6.0"	6.0"	6.0"	6.0"	4.5"	6.0"	6.0"	6.0"	6.0"	3.5"
	+/- 30 PSF	1712 LB/FT	285 LB/FT	6.0"	6.0"	6.0"	5.8"	6.0"	6.0"	4.0"	4.9"	4.8"		6.0"	6.0"	6.0"	6.0"	2.3"
	+/- 40 PSF	2303 LB/FT	380 LB/FT	6.0"	5.2"	6.0"	4.3"	6.0"	4.5"		3.6"			6.0"	5.4"	5.5"	5.0"	
	+/- 45 PSF	2598 LB/FT	428 LB/FT	6.0"	4.6"	6.0"	3.6"	5.5"	3.8"		3.2"			6.0"	4.8"	4.8"	4.4"	
	+/- 50 PSF	2894 LB/FT	475 LB/FT	6.0"	4.1"	6.0"	3.2"	4.9"	3.4"					6.0"	4.3"	4.4"	4.0"	
	+/- 60 PSF	3484 LB/FT	570 LB/FT	6.0"	3.2"			4.1"						5.0"	3.6"	3.6"	3.3"	
	+/- 65 PSF	3780 LB/FT	618 LB/FT					3.6"						4.6"	3.3"	3.3"	3.0"	
	+/- 70 PSF	4075 LB/FT	665 LB/FT					3.3"						4.3"	3.1"	3.1"		
	+/- 73 PSF	4276 LB/FT	697 LB/FT					3.2"						4.1"				
236"	+/- 10 PSF	566 LB/FT	98 LB/FT	6.0"	6.0"	6.0"	6.0"	6.0"	6.0"	6.0"	6.0"	6.0"	6.0"	6.0"	6.0"	6.0"	6.0"	6.0"
	+/- 20 PSF	1188 LB/FT	197 LB/FT	6.0"	6.0"	6.0"	6.0"	6.0"	6.0"	5.7"	6.0"	6.0"	4.2"	6.0"	6.0"	6.0"	6.0"	3.3"
	+/- 30 PSF	1810 LB/FT	295 LB/FT	6.0"	6.0"	6.0"	5.5"	6.0"	5.7"	3.8"	4.6"	4.6"		6.0"	6.0"	6.0"	6.0"	
	+/- 40 PSF	2433 LB/FT	393 LB/FT	6.0"	4.9"	6.0"	4.1"	5.9"	4.3"		3.4"			6.0"	5.1"	5.2"	4.7"	
	+/- 45 PSF	2744 LB/FT	443 LB/FT	6.0"	4.4"	6.0"	3.4"	5.2"	3.6"		3.0"			6.0"	4.6"	4.6"	4.2"	
	+/- 50 PSF	3055 LB/FT	492 LB/FT	6.0"	3.7"		3.0"	4.7"	3.2"					5.7"	4.1"	4.1"	3.8"	
	+/- 60 PSF	3677 LB/FT	590 LB/FT		3.1"			3.7"						4.7"	3.4"	3.4"	3.1"	
	+/- 65 PSF	3989 LB/FT	639 LB/FT					3.4"						4.4"	3.1"	3.2"		
	+/- 70.0 PSF	4300 LB/FT	688 LB/FT					3.1"						4.1"				

ANCHOR NOTES:

1. ANCHORS SHALL BE INSTALLED IN ACCORDANCE WITH MANUFACTURERS' RECOMMENDATIONS.
2. MINIMUM EMBEDMENT SHALL BE AS NOTED IN ANCHOR SCHEDULE. MINIMUM EMBEDMENT AND EDGE DISTANCE EXCLUDES STUCCO, FOAM, BRICK, AND OTHER WALL FINISHES.
3. ANCHOR SCHEDULE APPLIES TO ALL PRODUCTS CERTIFIED HEREIN, BUT ONLY PROVIDES MAXIMUM ALLOWABLE ANCHOR SPACING. MAXIMUM ALLOWABLE SPANS AND PRESSURES INDICATED IN SPAN SCHEDULE SHALL APPLY.
4. WHERE EXISTING STRUCTURE IS WOOD FRAMING, EXISTING CONDITIONS MAY VARY. FIELD VERIFY THAT FASTENERS ARE INTO ADEQUATE WOOD FRAMING MEMBERS, NOT INTO PLYWOOD.
5. WOOD BUCKS (BY OTHERS) SHALL BE ANCHORED PROPERLY TO TRANSFER LOADS TO THE EXISTING STRUCTURE.
6. MACHINE SCREWS SHALL HAVE MINIMUM OF 1/2" ENGAGEMENT OF THREADS IN BASE ANCHOR AND MAY HAVE EITHER A PAN HEAD, TRUSS HEAD, OR WAFER HEAD ("SIDEWALK BOLT") U.N.O.
7. SHEET METAL SCREWS SHALL BE INSTALLED WITH FULL ENGAGEMENT OF THREADS INTO METAL HOST STRUCTURE.
8. ▨ DESIGNATES ANCHOR CONDITIONS WHICH ARE NOT ACCEPTABLE FOR USE.
9. ANCHORS TO GROUT-FILLED BLOCK SHALL PENETRATE THROUGH FACE SHELL INTO GROUTED CELL.
10. † - #14 FASTENERS MAY BE SUBSTITUTED WITH 1/4" ELCO DRIL-FLEX FASTENERS.
11. SEE PAGE 18 FOR WALL MOUNT AND BUILD-OUT MOUNT REACTION KEY.

PRODUCT REVISED
as complying with the Florida Building Code
Acceptance No 23-1010.06
Expiration Date 08/25/2027
By Miami Dade Product Control

RICHARD NEET, P.E.
PE# 86488 CA# 9885

DECEMBER 22, 2023

FL

ENGINEERING EXPRESS®
POSTAL ADDRESS:
2234 NORTH FEDERAL HWY #7664
BOCA RATON, FL 33431
ENGINEERINGEXPRESS.COM

QUALITAS MANUFACTURING INC. (QMI)
1661 GLENLAKE AVE
ITASCA, IL 60143
PHONE: (866) 980-1750

QOMPACT3 - AL8 ROLL-UP HURRICANE SHUTTER (WALL & BUILD-OUT MOUNTS)
FBC EIGHTH EDITION (2023) | MIAMI-DADE NOA

REMARKS	DRWN	CHKD	DATE
PREV. SUB. NOA 22-0727.08	EPR	RWN	08/05/22
2023 FBC UPDATE	EPR	RWN	09/26/23
ADDRESSING MD COMMENTS	MRT	RWN	12/22/23

23-60247

SCALE: NTS UNLESS NOTED

ANCHOR SCHEDULE: BUILD-OUT MOUNT, SPANS 48"-144", 1/4"Ø FASTENERS

SLAT SPAN	DESIGN PRESSURE	Rx	Ry	1/4" HILTI KH-EZ	1/4" ALL-POINTS SOLID-SET	1/4" DEWALT ULTRACON+	1/4" DEWALT ULTRACON+ SS4	1/4" DEWALT POWER-BOLT	1/4" DEWALT SCREW BOLT+	1/4" DEWALT AGGRE-GATOR	1/4" DEWALT AGGRE-GATOR	1/4" DEWALT ULTRACON+	1/4" ALL-POINTS SOLID-SET	1/4" DEWALT ULTRACON+	1/4" DEWALT AGGRE-GATOR	1/4" DEWALT AGGRE-GATOR	#14 WOOD SCREW	#14 (410 SS) DRILL POINT SCREW OR 1/4-20 (410 SS) THRU-BOLT†	#14 (410 SS) DRILL POINT SCREW OR 1/4-20 (410 SS) THRU-BOLT†
				CONCRETE	CONCRETE	CONCRETE	CONCRETE	CONCRETE	GFB	GFB	GFB	GFB	HOLLOW BLOCK	HOLLOW BLOCK	HOLLOW BLOCK	HOLLOW BLOCK	WOOD	1/8" STEEL	1/8" ALUM.
				3000 PSI	3000 PSI	3000 PSI	3000	3000 PSI	ASTM C90	ASTM C90	ASTM C90	ASTM C90	ASTM C90	ASTM C90	ASTM C90	ASTM C90	G=0.55	A36	6063-T6
				EMBED: 2.50"	EMBED: 0.88"	EMBED: 1.75"	EMBED: 1.75"	EMBED: 2.50"	EMBED: 2.50"	EMBED: 2.00"	EMBED: 2.00"	EMBED: 1.25"	EMBED: 0.875"	EMBED: 1.25"	EMBED: 1.25"	EMBED: 1.25"	EMBED: 3.00"	-	-
				EDGE= 3.00"	EDGE= 3.00"	EDGE= 2.50"	EDGE= 2.50"	EDGE= 3.00"	EDGE= 3.00"	EDGE= 4.00"	EDGE= 2.00"	EDGE= 2.00"	EDGE= 3.00"	EDGE= 2.50"	EDGE= 4.00"	EDGE= 2.00"	EDGE= 1.00"	EDGE= 0.50"	EDGE= 0.50"
48"	+/- 100 PSF	0 LB/FT	200 LB/FT	6.0"	6.0"	6.0"	6.0"	6.0"	6.0"	6.0"	6.0"	6.0"	6.0"	6.0"	6.0"	6.0"	6.0"	6.0"	6.0"
	+/- 110 PSF	0 LB/FT	220 LB/FT	6.0"	6.0"	6.0"	6.0"	6.0"	6.0"	6.0"	6.0"	5.9"	6.0"	5.9"	5.9"	5.5"	6.0"	6.0"	6.0"
	+/- 120 PSF	0 LB/FT	240 LB/FT	6.0"	6.0"	6.0"	6.0"	6.0"	6.0"	6.0"	6.0"	5.4"	6.0"	5.4"	5.4"	5.1"	6.0"	6.0"	6.0"
	+/- 130 PSF	0 LB/FT	260 LB/FT	6.0"	6.0"	6.0"	6.0"	6.0"	6.0"	6.0"	6.0"	5.0"	6.0"	5.0"	5.0"	4.7"	6.0"	6.0"	6.0"
	+/- 140 PSF	0 LB/FT	280 LB/FT	6.0"	6.0"	6.0"	6.0"	6.0"	6.0"	6.0"	6.0"	4.6"	6.0"	4.6"	4.6"	4.4"	6.0"	6.0"	6.0"
	+/- 150 PSF	0 LB/FT	300 LB/FT	6.0"	6.0"	6.0"	6.0"	6.0"	6.0"	6.0"	6.0"	4.3"	6.0"	4.3"	4.3"	4.1"	6.0"	6.0"	6.0"
	+/- 160 PSF	0 LB/FT	320 LB/FT	6.0"	6.0"	6.0"	6.0"	6.0"	6.0"	6.0"	6.0"	4.0"	6.0"	4.0"	4.0"	3.8"	6.0"	6.0"	6.0"
	+/- 170 PSF	0 LB/FT	340 LB/FT	6.0"	6.0"	6.0"	6.0"	6.0"	6.0"	6.0"	6.0"	3.8"	6.0"	3.8"	3.8"	3.6"	6.0"	6.0"	6.0"
	+/- 180 PSF	0 LB/FT	360 LB/FT	6.0"	6.0"	6.0"	6.0"	6.0"	6.0"	6.0"	6.0"	3.6"	6.0"	3.6"	3.6"	3.4"	6.0"	6.0"	6.0"
	+/- 190 PSF	0 LB/FT	380 LB/FT	6.0"	6.0"	6.0"	6.0"	6.0"	6.0"	6.0"	6.0"	3.4"	6.0"	3.4"	3.4"	3.2"	6.0"	6.0"	6.0"
	+/- 200 PSF	0 LB/FT	400 LB/FT	6.0"	6.0"	6.0"	6.0"	6.0"	6.0"	6.0"	6.0"	3.2"	5.8"	3.2"	3.2"	3.0"	6.0"	6.0"	5.8"
	+/- 210 PSF	0 LB/FT	420 LB/FT	6.0"	6.0"	6.0"	6.0"	6.0"	6.0"	6.0"	5.7"	3.1"	5.6"	3.1"	3.1"		6.0"	6.0"	5.5"
60"	+/- 80 PSF	0 LB/FT	200 LB/FT	6.0"	6.0"	6.0"	6.0"	6.0"	6.0"	6.0"	6.0"	6.0"	6.0"	6.0"	6.0"	6.0"	6.0"	6.0"	6.0"
	+/- 90 PSF	0 LB/FT	225 LB/FT	6.0"	6.0"	6.0"	6.0"	6.0"	6.0"	6.0"	6.0"	5.7"	6.0"	5.7"	5.7"	5.4"	6.0"	6.0"	6.0"
	+/- 100 PSF	0 LB/FT	250 LB/FT	6.0"	6.0"	6.0"	6.0"	6.0"	6.0"	6.0"	6.0"	5.2"	6.0"	5.2"	5.2"	4.9"	6.0"	6.0"	6.0"
	+/- 110 PSF	9 LB/FT	275 LB/FT	6.0"	6.0"	6.0"	6.0"	6.0"	6.0"	6.0"	6.0"	4.6"	6.0"	4.6"	4.6"	4.4"	6.0"	6.0"	6.0"
	+/- 120 PSF	87 LB/FT	300 LB/FT	6.0"	6.0"	6.0"	6.0"	6.0"	6.0"	6.0"	6.0"	3.9"	6.0"	3.9"	3.7"	3.6"	6.0"	6.0"	6.0"
	+/- 130 PSF	165 LB/FT	325 LB/FT	6.0"	6.0"	6.0"	6.0"	6.0"	6.0"	6.0"	6.0"	3.3"	5.5"	3.3"	3.2"		6.0"	6.0"	6.0"
	+/- 140 PSF	244 LB/FT	350 LB/FT	6.0"	6.0"	6.0"	6.0"	6.0"	6.0"	6.0"	5.3"		4.7"				6.0"	6.0"	5.3"
	+/- 150 PSF	322 LB/FT	375 LB/FT	6.0"	6.0"	6.0"	5.8"	5.6"	6.0"	5.5"	4.7"		4.1"				5.8"	6.0"	4.8"
	+/- 160 PSF	400 LB/FT	400 LB/FT	6.0"	6.0"	5.9"	5.2"		5.4"	4.9"	4.2"		3.6"				5.1"	6.0"	4.3"
	+/- 170 PSF	479 LB/FT	425 LB/FT	6.0"	5.7"	5.2"	4.7"		4.8"	4.4"	3.8"		3.2"				4.6"	5.5"	3.9"
72"	+/- 60 PSF	25 LB/FT	180 LB/FT	6.0"	6.0"	6.0"	6.0"	6.0"	6.0"	6.0"	6.0"	6.0"	6.0"	6.0"	6.0"	6.0"	6.0"	6.0"	6.0"
	+/- 70 PSF	128 LB/FT	210 LB/FT	6.0"	6.0"	6.0"	6.0"	6.0"	6.0"	6.0"	6.0"	5.0"	6.0"	5.0"	4.7"	4.5"	6.0"	6.0"	6.0"
	+/- 80 PSF	232 LB/FT	240 LB/FT	6.0"	6.0"	6.0"	6.0"	6.0"	6.0"	6.0"	6.0"	4.0"	6.0"	4.0"	3.6"	3.4"	6.0"	6.0"	6.0"
	+/- 90 PSF	335 LB/FT	270 LB/FT	6.0"	6.0"	6.0"	6.0"	6.0"	6.0"	6.0"	5.8"	3.3"	4.9"	3.3"			6.0"	6.0"	6.0"
	+/- 100 PSF	438 LB/FT	300 LB/FT	6.0"	6.0"	6.0"	6.0"	5.8"	6.0"	5.6"	4.9"		4.1"				5.7"	6.0"	5.2"
	+/- 110 PSF	542 LB/FT	330 LB/FT	6.0"	6.0"	5.5"	5.3"	5.1"	5.1"	4.8"	4.3"		3.5"				4.8"	6.0"	4.5"
	+/- 120 PSF	645 LB/FT	360 LB/FT	6.0"	5.4"	4.8"	4.7"		4.5"	4.3"	3.8"		3.1"				4.2"	5.3"	4.0"
	+/- 130 PSF	749 LB/FT	390 LB/FT	5.9"	4.8"	4.2"	4.2"		4.0"	3.8"	3.4"						3.7"	4.7"	3.6"
	+/- 140 PSF	852 LB/FT	420 LB/FT	5.3"	4.3"	3.8"	3.8"		3.5"	3.4"	3.1"						3.4"	4.2"	3.3"
84"	+/- 40 PSF	83 LB/FT	140 LB/FT	6.0"	6.0"	6.0"	6.0"	6.0"	6.0"	6.0"	6.0"	6.0"	6.0"	6.0"	6.0"	6.0"	6.0"	6.0"	6.0"
	+/- 50 PSF	214 LB/FT	175 LB/FT	6.0"	6.0"	6.0"	6.0"	6.0"	6.0"	6.0"	6.0"	5.1"	6.0"	5.1"	4.5"	4.3"	6.0"	6.0"	6.0"
	+/- 60 PSF	345 LB/FT	210 LB/FT	6.0"	6.0"	6.0"	6.0"	6.0"	6.0"	6.0"	6.0"	3.8"	5.5"	3.8"	3.3"	3.2"	6.0"	6.0"	6.0"
	+/- 70 PSF	475 LB/FT	245 LB/FT	6.0"	6.0"	6.0"	6.0"	6.0"	6.0"	6.0"	5.4"	3.1"	4.4"	3.1"			5.9"	6.0"	5.7"
	+/- 80 PSF	606 LB/FT	280 LB/FT	6.0"	6.0"	5.5"	5.5"	5.3"	5.1"	5.0"	4.5"		3.6"				4.8"	6.0"	4.8"
	+/- 90 PSF	737 LB/FT	315 LB/FT	6.0"	5.3"	4.6"	4.7"		4.3"	4.2"	3.8"		3.0"				4.1"	5.2"	4.1"
	+/- 100 PSF	867 LB/FT	350 LB/FT	5.6"	4.6"	4.0"	4.1"		3.7"	3.7"	3.3"						3.5"	4.6"	3.6"
	+/- 110 PSF	998 LB/FT	385 LB/FT	4.9"	4.1"	3.5"	3.7"		3.3"	3.3"							3.1"	4.0"	3.2"
	+/- 120 PSF	1129 LB/FT	420 LB/FT	4.4"	3.7"	3.1"	3.3"		3.0"	2.9"							2.8"	3.6"	2.9"
96"	+/- 30 PSF	143 LB/FT	120 LB/FT	6.0"	6.0"	6.0"	6.0"	6.0"	6.0"	6.0"	6.0"	6.0"	6.0"	6.0"	6.0"	6.0"	6.0"	6.0"	6.0"
	+/- 40 PSF	303 LB/FT	160 LB/FT	6.0"	6.0"	6.0"	6.0"	6.0"	6.0"	6.0"	6.0"	4.7"	6.0"	4.7"	4.1"	3.9"	6.0"	6.0"	6.0"
	+/- 50 PSF	463 LB/FT	200 LB/FT	6.0"	6.0"	6.0"	6.0"	6.0"	6.0"	6.0"	6.0"	3.5"	4.8"	3.5"			6.0"	6.0"	6.0"
	+/- 60 PSF	623 LB/FT	240 LB/FT	6.0"	6.0"	5.6"	5.9"	5.6"	5.3"	5.2"	4.8"		3.8"				5.0"	6.0"	5.1"
	+/- 70 PSF	783 LB/FT	280 LB/FT	6.0"	5.4"	4.6"	4.9"		4.3"	4.3"	3.9"		3.1"				4.1"	5.3"	4.2"
	+/- 80 PSF	943 LB/FT	320 LB/FT	5.4"	4.6"	3.9"	4.1"		3.6"	3.7"	3.3"						3.4"	4.5"	3.6"
	+/- 90 PSF	1103 LB/FT	360 LB/FT	4.6"	4.0"	3.3"	3.6"		3.1"	3.2"							3.0"	3.9"	3.2"
	+/- 100 PSF	1263 LB/FT	400 LB/FT	4.1"	3.5"	2.9"	3.2"		2.8"	2.8"							2.6"	3.4"	2.8"
108"	+/- 30 PSF	307 LB/FT	135 LB/FT	6.0"	6.0"	6.0"	6.0"	6.0"	6.0"	6.0"	6.0"	5.2"	6.0"	5.2"	4.4"	4.2"	6.0"	6.0"	6.0"
	+/- 40 PSF	498 LB/FT	180 LB/FT	6.0"	6.0"	6.0"	6.0"	6.0"	6.0"	6.0"	6.0"	3.5"	4.8"	3.5"			6.0"	6.0"	6.0"
	+/- 50 PSF	689 LB/FT	225 LB/FT	6.0"	6.0"	5.4"	5.7"	5.4"	5.0"	5.1"	4.6"		3.6"				4.8"	6.0"	5.0"
	+/- 60 PSF	880 LB/FT	270 LB/FT	5.9"	5.1"	4.3"	4.6"		4.0"	4.1"	3.7"						3.8"	5.0"	4.1"
	+/- 70.0 PSF	1072 LB/FT	315 LB/FT	4.9"	4.2"	3.5"	3.9"		3.3"	3.4"	3.1"						3.2"	4.2"	3.4"
	+/- 80.0 PSF	1263 LB/FT	360 LB/FT	4.2"	3.6"	3.0"	3.3"		2.9"	2.9"							2.7"	3.6"	2.9"
	+/- 90.0 PSF	1454 LB/FT	405 LB/FT	3.4"	3.2"	2.6"			2.5"	2.5"							2.4"	3.1"	2.6"
120"	+/- 30 PSF	456 LB/FT	150 LB/FT	6.0"	6.0"	6.0"	6.0"	6.0"	6.0"	6.0"	6.0"	4.0"	5.4"	4.0"	3.4"	3.2"	6.0"	6.0"	6.0"
	+/- 40 PSF	680 LB/FT	200 LB/FT	6.0"	6.0"	5.6"	6.0"	5.8"	5.2"	5.3"	4.9"		3.8"				5.0"	6.0"	5.4"
	+/- 50 PSF	905 LB/FT	250 LB/FT	5.9"	5.1"	4.3"	4.7"		4.0"	4.1"	3.8"						3.8"	5.0"	4.2"
	+/- 60 PSF	1129 LB/FT	300 LB/FT	4.8"	4.1"	3.4"	3.8"		3.2"	3.3"	3.1"						3.1"	4.1"	3.4"
	+/- 70.0 PSF	1353 LB/FT	350 LB/FT	4.0"	3.5"	2.9"	3.2"		2.7"	2.8"							2.6"	3.4"	2.9"
	+/- 80.0 PSF	1578 LB/FT	400 LB/FT	3.2"	3.0"	2.5"			2.3"	2.4"							2.2"	3.0"	2.5"
132"	+/- 30 PSF	598 LB/FT	165 LB/FT	6.0"	6.0"	6.0"	6.0"	6.0"	6.0"	6.0"	5.7"	3.3"	4.4"	3.3"			5.7"	6.0"	6.0"
	+/- 40 PSF	857 LB/FT	220 LB/FT	6.0"	5.5"	4.6"	5.1"		4.3"	4.4"	4.1"		3.1"				4.1"	5.5"	4.5"
	+/- 50 PSF	1116 LB/FT	275 LB/FT	4.9"	4.3"	3.5"	4.0"		3.3"	3.5"	3.2"						3.2"	4.2"	3.5"
	+/- 60 PSF	1375 LB/FT	330 LB/FT	4.0"	3.5"	2.9"	3.2"		2.7"	2.8"							2.6"	3.5"	2.9"
	+/- 70 PSF	1634 LB/FT	385 LB/FT	3.1"		2.4"			2.3"	2.4"							2.2"	2.9"	2.5"
144"	+/- 20 PSF	440 LB/FT	120 LB/FT	6.0"	6.0"	6.0"	6.0"	6.0"	6.0"	6.0"	6.0"	4.6"	6.0"	4.6"	3.7"	3.6"	6.0"	6.0"	6.0"
	+/- 30 PSF	735 LB/FT	180 LB/FT	6.0"	6.0"	5.4"	6.0"	5.7"	5.1"	5.3"	4.9"		3.7"				4.8"	6.0"	5.4"
	+/- 40 PSF	1031 LB/FT	240 LB/FT	5.4"	4.7"	3.9"	4.4"		3.7"	3.8"	3.5"						3.5"	4.7"	3.9"
	+/- 50 PSF	1326 LB/FT	300 LB/FT	4.2"	3.7"	3.0"	3.4"		2.9"	3.0"							2.7"	3.7"	3.1"
	+/- 60 PSF	1622 LB/FT	360 LB/FT	3.2"	3.0"	2.5"			2.4"	2.5"							2.2"	3.0"	2.5"

RICHARD NEET, P.E.
PE# 86488 CA# 9885

DECEMBER 22, 2023

FL

ANCHOR NOTES:

1. ANCHORS SHALL BE INSTALLED IN ACCORDANCE WITH MANUFACTURERS' RECOMMENDATIONS.
2. MINIMUM EMBEDMENT SHALL BE AS NOTED IN ANCHOR SCHEDULE. MINIMUM EMBEDMENT AND EDGE DISTANCE EXCLUDES STUCCO, FOAM, BRICK, AND OTHER WALL FINISHES.
3. ANCHOR SCHEDULE APPLIES TO ALL PRODUCTS CERTIFIED HEREIN, BUT ONLY PROVIDES MAXIMUM ALLOWABLE ANCHOR SPACING. MAXIMUM ALLOWABLE SPANS AND PRESSURES INDICATED IN SPAN SCHEDULE SHALL APPLY.
4. WHERE EXISTING STRUCTURE IS WOOD FRAMING, EXISTING CONDITIONS MAY VARY. FIELD VERIFY THAT FASTENERS ARE INTO ADEQUATE WOOD FRAMING MEMBERS, NOT INTO PLYWOOD.
5. WOOD BUCKS (BY OTHERS) SHALL BE ANCHORED PROPERLY TO TRANSFER LOADS TO THE EXISTING STRUCTURE.
6. MACHINE SCREWS SHALL HAVE MINIMUM OF 1/2" ENGAGEMENT OF THREADS IN BASE ANCHOR AND MAY HAVE EITHER A PAN HEAD, TRUSS HEAD, OR WAFER HEAD ("SIDEWALK BOLT") U.N.O.
7. SHEET METAL SCREWS SHALL BE INSTALLED WITH FULL ENGAGEMENT OF THREADS INTO METAL HOST STRUCTURE.
8. DESIGNATES ANCHOR CONDITIONS WHICH ARE NOT ACCEPTABLE FOR USE.
9. ANCHORS TO GROUT-FILLED BLOCK SHALL PENETRATE THROUGH FACE SHELL INTO GROUTED CELL.
10. † - #14 FASTENERS MAY BE SUBSTITUTED WITH 1/4" ELCO DRIL-FLEX FASTENERS.
11. SEE PAGE 18 FOR WALL MOUNT AND BUILD-OUT MOUNT REACTION KEY.

PRODUCT REVISED
as complying with the Florida Building Code
Acceptance No 23-010.06
Expiration Date 08/25/2027
By
Miami Dade Product Control

ENGINEERING EXPRESS®
POSTAL ADDRESS:
2234 NORTH FEDERAL HWY #7664
BOCA RATON, FL 33431
ENGINEERINGEXPRESS.COM

QUALITAS MANUFACTURING INC. (QMI)
1661 GLENLAKE AVE
ITASCA, IL 60143
PHONE: (866) 980-1750

QOMPACT3 - AL8 ROLL-UP HURRICANE SHUTTER
(WALL & BUILD-OUT MOUNTS)
FBC EIGHTH EDITION (2023) | MIAMI-DADE NOA

REMARKS	DRWN	CHKD	DATE
PREV. SUB. NOA 22-0727.08	EPR	RWN	08/05/22
2023 FBC UPDATE	EPR	RWN	09/26/23
ADDRESSING MD COMMENTS	MRT	RWN	12/22/23

23-60247

SCALE: NTS UNLESS NOTED

ANCHOR SCHEDULE: BUILD-OUT MOUNT, SPANS 156"-236", 1/4"Ø FASTENERS

RICHARD NEET, P.E.
PE# 86488 CA# 9885

DECEMBER 22, 2023

FL

SLAT SPAN	DESIGN PRESSURE	Rx	Ry	1/4" HILTI KH-EZ	1/4" ALL-POINTS SOLID-SET	1/4" DEWALT ULTRACON+	1/4" SS ITW TAPCON	1/4" DEWALT ULTRACON+ SS4	1/4" DEWALT POWER-BOLT	1/4" DEWALT SCREW BOLT+	1/4" DEWALT AGGRE-GATOR	1/4" DEWALT AGGRE-GATOR	1/4" DEWALT ULTRACON+	1/4" ALL-POINTS SOLID-SET	1/4" DEWALT AGGRE-GATOR	1/4" DEWALT AGGRE-GATOR	#14 WOOD SCREW	#14 (410 SS) DRILL POINT SCREW OR 1/4-20 (410 SS) THRU-BOLT	#14 (410 SS) DRILL POINT SCREW OR 1/4-20 (410 SS) THRU-BOLT
				CONCRETE	CONCRETE	CONCRETE	CONCRETE	CONCRETE	CONCRETE	GFB	GFB	GFB	GFB OR HOLLOW BLOCK	HOLLOW BLOCK	HOLLOW BLOCK	HOLLOW BLOCK	WOOD	STEEL	ALUM.
				3000 PSI	3000 PSI	3000 PSI	3192 PSI	3000	3000 PSI	ASTM C90	ASTM C90	ASTM C90	ASTM C90	ASTM C90	ASTM C90	ASTM C90	G=0.55	A36	6063-T6
				EMBED: 2.50"	EMBED: 0.88"	EMBED: 1.75"	EMBED: 1.75"	EMBED: 1.75"	EMBED: 2.50"	EMBED: 2.50"	EMBED: 2.00"	EMBED: 2.00"	EMBED: 1.25"	EMBED: 0.88"	EMBED: 1.25"	EMBED: 1.25"	EMBED: 3.00"	-	-
				EDGE= 3.00"	EDGE= 3.00"	EDGE= 2.50"	EDGE= 2.50"	EDGE= 2.50"	EDGE= 3.00"	EDGE= 3.00"	EDGE= 4.00"	EDGE= 2.00"	EDGE= 2.00"	EDGE= 3.00"	EDGE= 4.00"	EDGE= 2.00"	EDGE= 1.00"	EDGE= 0.50"	EDGE= 0.50"
156"	+/- 20 PSF	538 LB/FT	130 LB/FT	6.0"	6.0"	6.0"	6.0"	6.0"	6.0"	6.0"	6.0"	6.0"	3.9"	5.1"	3.2"	3.1"	6.0"	6.0"	6.0"
	+/- 30 PSF	871 LB/FT	195 LB/FT	6.0"	5.6"	4.6"	4.7"	5.3"		4.4"	4.6"	4.2"		3.2"			4.1"	5.6"	4.7"
	+/- 40 PSF	1205 LB/FT	260 LB/FT	4.7"	4.1"	3.4"	3.4"	3.8"		3.2"	3.3"	3.1"					3.0"	4.1"	3.5"
	+/- 50 PSF	1538 LB/FT	325 LB/FT	3.4"	3.2"	2.7"		3.0"		2.5"	2.6"						2.4"	3.2"	
168"	+/- 20 PSF	635 LB/FT	140 LB/FT	6.0"	6.0"	6.0"	6.0"	6.0"	6.0"	6.0"	6.0"	5.9"	3.4"	4.4"			5.7"	6.0"	6.0"
	+/- 30 PSF	1007 LB/FT	210 LB/FT	5.6"	5.0"	4.1"	4.1"	4.7"		3.8"	4.0"	3.8"					3.6"	4.9"	4.2"
	+/- 40 PSF	1380 LB/FT	280 LB/FT	4.1"	3.7"	3.0"	3.0"	3.4"		2.8"	3.0"						2.7"	3.6"	3.1"
	+/- 46 PSF	1604 LB/FT	322 LB/FT	3.3"	3.2"	2.6"				2.4"	2.6"						2.3"	3.1"	
180"	+/- 10 PSF	317 LB/FT	75 LB/FT	6.0"	6.0"	6.0"	6.0"	6.0"	6.0"	6.0"	6.0"	6.0"	6.0"	6.0"	5.4"	5.3"	6.0"	6.0"	6.0"
	+/- 20 PSF	731 LB/FT	150 LB/FT	6.0"	6.0"	5.6"	5.7"	6.0"	6.0"	5.3"	5.6"	5.2"	3.1"	3.9"			5.0"	6.0"	5.8"
	+/- 30 PSF	1144 LB/FT	225 LB/FT	5.0"	4.4"	3.6"	3.7"	4.2"		3.4"	3.6"	3.4"					3.2"	4.4"	3.8"
	+/- 40 PSF	1558 LB/FT	300 LB/FT	3.4"	3.3"	2.7"		3.1"		2.5"	2.7"						2.4"	3.3"	
	+/- 43 PSF	1682 LB/FT	323 LB/FT	3.2"	3.0"	2.5"				2.3"	2.5"						2.2"	3.0"	
192"	+/- 10 PSF	371 LB/FT	80 LB/FT	6.0"	6.0"	6.0"	6.0"	6.0"	6.0"	6.0"	6.0"	6.0"	5.9"	6.0"	4.8"	4.6"	6.0"	6.0"	6.0"
	+/- 20 PSF	827 LB/FT	160 LB/FT	6.0"	6.0"	5.0"	5.1"	5.8"	5.5"	4.8"	5.0"	4.7"		3.5"			4.5"	6.0"	5.3"
	+/- 30 PSF	1283 LB/FT	240 LB/FT	4.5"	4.0"	3.3"	3.3"	3.8"		3.1"	3.3"	3.1"					2.9"	4.0"	3.4"
	+/- 40 PSF	1739 LB/FT	320 LB/FT	3.1"		2.4"				2.3"	2.4"						2.2"		
204"	+/- 10 PSF	424 LB/FT	85 LB/FT	6.0"	6.0"	6.0"	6.0"	6.0"	6.0"	6.0"	6.0"	6.0"	5.3"	6.0"	4.3"	4.1"	6.0"	6.0"	6.0"
	+/- 20 PSF	924 LB/FT	170 LB/FT	6.0"	5.6"	4.5"	4.6"	5.3"		4.3"	4.6"	4.3"		3.2"			4.1"	5.6"	4.8"
	+/- 30 PSF	1423 LB/FT	255 LB/FT	4.1"	3.7"	3.0"	3.0"	3.5"		2.8"	3.0"						2.7"	3.6"	3.1"
	+/- 38 PSF	1823 LB/FT	323 LB/FT			2.3"				2.2"	2.3"						2.1"		
216"	+/- 10 PSF	477 LB/FT	90 LB/FT	6.0"	6.0"	6.0"	6.0"	6.0"	6.0"	6.0"	6.0"	6.0"	4.8"	6.0"	3.9"	3.7"	6.0"	6.0"	6.0"
	+/- 20 PSF	1022 LB/FT	180 LB/FT	5.7"	5.1"	4.1"	4.2"	4.8"		3.9"	4.2"	3.9"					3.7"	5.1"	4.4"
	+/- 30 PSF	1566 LB/FT	270 LB/FT	3.5"	3.4"	2.7"		3.2"		2.6"	2.7"						2.4"	3.3"	
	+/- 36 PSF	1893 LB/FT	324 LB/FT			2.2"				2.1"	2.3"						2.0"		
228"	+/- 10 PSF	530 LB/FT	95 LB/FT	6.0"	6.0"	6.0"	6.0"	6.0"	6.0"	6.0"	6.0"	6.0"	4.4"	5.6"	3.5"	3.4"	6.0"	6.0"	6.0"
	+/- 20 PSF	1121 LB/FT	190 LB/FT	5.2"	4.7"	3.8"	3.9"	4.5"		3.6"	3.8"	3.6"					3.4"	4.7"	4.1"
	+/- 30 PSF	1712 LB/FT	285 LB/FT	3.2"	3.1"	2.5"				2.4"	2.5"						2.2"	3.1"	
	+/- 34 PSF	1948 LB/FT	323 LB/FT			2.2"				2.1"	2.2"						2.0"		
236"	+/- 10 PSF	566 LB/FT	98 LB/FT	6.0"	6.0"	6.0"	6.0"	6.0"	6.0"	6.0"	6.0"	6.0"	4.2"	5.2"	3.3"	3.2"	6.0"	6.0"	6.0"
	+/- 20 PSF	1188 LB/FT	197 LB/FT	5.0"	4.5"	3.6"	3.7"	4.2"		3.4"	3.6"	3.4"					3.2"	4.4"	3.9"
	+/- 30 PSF	1810 LB/FT	295 LB/FT	3.0"		2.4"				2.2"	2.4"						2.1"		
	+/- 33 PSF	1997 LB/FT	325 LB/FT			2.1"				2.0"	2.2"						1.9"		

ANCHOR NOTES:

1. ANCHORS SHALL BE INSTALLED IN ACCORDANCE WITH MANUFACTURERS' RECOMMENDATIONS.
2. MINIMUM EMBEDMENT SHALL BE AS NOTED IN ANCHOR SCHEDULE. MINIMUM EMBEDMENT AND EDGE DISTANCE EXCLUDES STUCCO, FOAM, BRICK, AND OTHER WALL FINISHES.
3. ANCHOR SCHEDULE APPLIES TO ALL PRODUCTS CERTIFIED HEREIN, BUT ONLY PROVIDES MAXIMUM ALLOWABLE ANCHOR SPACING. MAXIMUM ALLOWABLE SPANS AND PRESSURES INDICATED IN SPAN SCHEDULE SHALL APPLY.
4. WHERE EXISTING STRUCTURE IS WOOD FRAMING, EXISTING CONDITIONS MAY VARY. FIELD VERIFY THAT FASTENERS ARE INTO ADEQUATE WOOD FRAMING MEMBERS, NOT INTO PLYWOOD.
5. WOOD BUCKS (BY OTHERS) SHALL BE ANCHORED PROPERLY TO TRANSFER LOADS TO THE EXISTING STRUCTURE.
6. MACHINE SCREWS SHALL HAVE MINIMUM OF 1/2" ENGAGEMENT OF THREADS IN BASE ANCHOR AND MAY HAVE EITHER A PAN HEAD, TRUSS HEAD, OR WAFER HEAD ("SIDEWALK BOLT") U.N.O.
7. SHEET METAL SCREWS SHALL BE INSTALLED WITH FULL ENGAGEMENT OF THREADS INTO METAL HOST STRUCTURE.
8. ▨ DESIGNATES ANCHOR CONDITIONS WHICH ARE NOT ACCEPTABLE FOR USE.
9. ANCHORS TO GROUT-FILLED BLOCK SHALL PENETRATE THROUGH FACE SHELL INTO GROUTED CELL.
10. † - #14 FASTENERS MAY BE SUBSTITUTED WITH 1/4" ELCO DRIL-FLEX FASTENERS.
11. SEE PAGE 18 FOR WALL MOUNT AND BUILD-OUT MOUNT REACTION KEY.

PRODUCT REVISED
is complying with the Florida Building Code
Acceptance No 23-1010.06
Expiration Date 04/25/2027
By
Miami Dade Product Control

ENGINEERING EXPRESS®
POSTAL ADDRESS:
2234 NORTH FEDERAL HWY #7664
BOCA RATON, FL 33431
ENGINEERINGEXPRESS.COM

QUALITAS MANUFACTURING INC. (QMI)
1661 GLENLAKE AVE
ITASCA, IL 60143
PHONE: (866) 980-1750

QOMPACT3 - AL8 ROLL-UP HURRICANE SHUTTER (WALL & BUILD-OUT MOUNTS)
FBC EIGHTH EDITION (2023) | MIAMI-DADE NOA

REMARKS	DRWN	CHKD	DATE
PREV. SUB. NOA 22-0727.08	EPR	RWN	08/05/22
2023 FBC UPDATE	EPR	RWN	09/26/23
ADDRESSING MD COMMENTS	MRT	RWN	12/22/23

23-60247

SCALE: NTS UNLESS NOTED

ANCHOR SCHEDULE: BUILD-OUT MOUNT, SPANS 48"-96", ≥5/16"Ø FASTENERS

SLAT SPAN	DESIGN PRESSURE	Rx	Ry	3/8" ELCO / DEWALT CONFLEX	3/8" DEWALT SCREW BOLT+	3/8" ELCO / DEWALT CONFLEX	3/8" DEWALT SCREW BOLT+	3/8" HILTI KH-EZ	3/8" HILTI KH-EZ	5/16" DEWALT ULTRACON	3/8" DEWALT SCREW BOLT+	5/16" ITW TAPCON XL	5/16" ITW TAPCON XL	3/8" ELCO TAPFLEX	5/16" ELCO DRIL-FLEX	5/16" (410 SS) DRILL POINT SCREW	5/16" (410 SS) DRILL POINT SCREW	#20 (0.32") WOOD SCREW
				CONCRETE	CONCRETE	CONCRETE	CONCRETE	CONCRETE	CONCRETE	CONCRETE	GFB	GFB	HOLLOW BLOCK	1/4" ALUM. OR STEEL	1/4" STEEL	1/4" STEEL	1/4" ALUM.	WOOD
				4510 PSI	3000 PSI	1819 PSI	3000 PSI	3000 PSI	3000 PSI	3500 PSI	ASTM C90	ASTM C90	ASTM C90	6061-T6 OR A36	A36	A36	6063-T6	G=0.55
				EMBED: 3.50"	EMBED: 3.25"	EMBED: 3.50"	EMBED: 3.25"	EMBED: 3.25"	EMBED: 3.25"	EMBED: 2.00"	EMBED: 3.25"	EMBED: 2.25"	EMBED: 1.75"	-	-	-	-	EMBED: 4.00"
				EDGE= 3.75"	EDGE= 5.00"	EDGE= 3.75"	EDGE= 4.00"	EDGE= 5.00"	EDGE= 4.00"	EDGE= 3.13"	EDGE= 5.00"	EDGE= 4.00"	EDGE= 4.00"	EDGE= 0.75"	EDGE= 0.75"	EDGE= 0.75"	EDGE= 0.63"	EDGE= 1.50"
48"	+/- 160 PSF	0 LB/FT	320 LB/FT	6.0"	6.0"	6.0"	6.0"	6.0"	6.0"	6.0"	6.0"	6.0"	6.0"	6.0"	6.0"	6.0"	6.0"	6.0"
	+/- 170 PSF	0 LB/FT	340 LB/FT	6.0"	6.0"	6.0"	6.0"	6.0"	6.0"	6.0"	6.0"	6.0"	5.7"	6.0"	6.0"	6.0"	6.0"	6.0"
	+/- 180 PSF	0 LB/FT	360 LB/FT	6.0"	6.0"	6.0"	6.0"	6.0"	6.0"	6.0"	6.0"	6.0"	5.4"	6.0"	6.0"	6.0"	6.0"	6.0"
	+/- 190 PSF	0 LB/FT	380 LB/FT	6.0"	6.0"	6.0"	6.0"	6.0"	6.0"	6.0"	6.0"	6.0"	5.1"	6.0"	6.0"	6.0"	6.0"	6.0"
	+/- 200 PSF	0 LB/FT	400 LB/FT	6.0"	6.0"	6.0"	6.0"	6.0"	6.0"	6.0"	6.0"	6.0"	4.8"	6.0"	6.0"	6.0"	6.0"	6.0"
	+/- 210 PSF	0 LB/FT	420 LB/FT	6.0"	6.0"	6.0"	6.0"	6.0"	6.0"	6.0"	6.0"	6.0"	4.6"	6.0"	6.0"	6.0"	6.0"	6.0"
	+/- 220 PSF	0 LB/FT	440 LB/FT	6.0"	6.0"	6.0"	6.0"	6.0"	6.0"	6.0"	6.0"	6.0"	4.4"	6.0"	6.0"	6.0"	6.0"	6.0"
	+/- 230 PSF	0 LB/FT	460 LB/FT	6.0"	6.0"	6.0"	6.0"	6.0"	6.0"	6.0"	6.0"	6.0"	4.2"	6.0"	6.0"	6.0"	6.0"	6.0"
	+/- 240 PSF	15 LB/FT	480 LB/FT	6.0"	6.0"	6.0"	6.0"	6.0"	6.0"	6.0"	6.0"	6.0"	4.0"	6.0"	6.0"	6.0"	6.0"	6.0"
	+/- 246.7 PSF	53 LB/FT	493 LB/FT	6.0"	6.0"	6.0"	6.0"	6.0"	6.0"	6.0"	6.0"	6.0"	3.8"	6.0"	6.0"	6.0"	6.0"	6.0"
60"	+/- 110 PSF	9 LB/FT	275 LB/FT	6.0"	6.0"	6.0"	6.0"	6.0"	6.0"	6.0"	6.0"	6.0"	6.0"	6.0"	6.0"	6.0"	6.0"	6.0"
	+/- 120 PSF	87 LB/FT	300 LB/FT	6.0"	6.0"	6.0"	6.0"	6.0"	6.0"	6.0"	6.0"	6.0"	5.9"	6.0"	6.0"	6.0"	6.0"	6.0"
	+/- 130 PSF	165 LB/FT	325 LB/FT	6.0"	6.0"	6.0"	6.0"	6.0"	6.0"	6.0"	6.0"	6.0"	5.2"	6.0"	6.0"	6.0"	6.0"	6.0"
	+/- 140 PSF	244 LB/FT	350 LB/FT	6.0"	6.0"	6.0"	6.0"	6.0"	6.0"	6.0"	6.0"	6.0"	4.6"	6.0"	6.0"	6.0"	6.0"	6.0"
	+/- 150 PSF	322 LB/FT	375 LB/FT	6.0"	6.0"	6.0"	6.0"	6.0"	6.0"	6.0"	6.0"	6.0"	4.1"	6.0"	6.0"	6.0"	6.0"	6.0"
	+/- 160 PSF	400 LB/FT	400 LB/FT	6.0"	6.0"	6.0"	6.0"	6.0"	6.0"	6.0"	6.0"	6.0"	3.8"	6.0"	6.0"	6.0"	6.0"	6.0"
	+/- 170 PSF	479 LB/FT	425 LB/FT	6.0"	6.0"	6.0"	6.0"	6.0"	6.0"	5.5"	6.0"	6.0"		6.0"	6.0"	6.0"	6.0"	6.0"
	+/- 180 PSF	557 LB/FT	450 LB/FT	6.0"	6.0"	6.0"	6.0"	6.0"	6.0"	5.0"	6.0"	6.0"		6.0"	6.0"	6.0"	6.0"	5.3"
	+/- 190 PSF	635 LB/FT	475 LB/FT	6.0"	6.0"	6.0"	6.0"	6.0"	6.0"	4.6"	6.0"	6.0"		6.0"	6.0"	6.0"	6.0"	4.8"
	+/- 200 PSF	714 LB/FT	500 LB/FT	6.0"	6.0"	6.0"	6.0"	6.0"	6.0"	4.3"	6.0"	6.0"		6.0"	6.0"	6.0"	6.0"	4.3"
	+/- 210.0 PSF	792 LB/FT	525 LB/FT	6.0"	6.0"	6.0"	6.0"	6.0"	6.0"	4.0"	6.0"	6.0"		6.0"	6.0"	6.0"	6.0"	3.9"
	+/- 214.3 PSF	826 LB/FT	536 LB/FT	6.0"	6.0"	6.0"	6.0"	6.0"	6.0"	3.9"	6.0"	6.0"		6.0"	6.0"	6.0"	6.0"	3.8"
72"	+/- 80 PSF	232 LB/FT	240 LB/FT	6.0"	6.0"	6.0"	6.0"	6.0"	6.0"	6.0"	6.0"	6.0"	6.0"	6.0"	6.0"	6.0"	6.0"	6.0"
	+/- 90 PSF	335 LB/FT	270 LB/FT	6.0"	6.0"	6.0"	6.0"	6.0"	6.0"	6.0"	6.0"	6.0"	5.3"	6.0"	6.0"	6.0"	6.0"	6.0"
	+/- 100 PSF	438 LB/FT	300 LB/FT	6.0"	6.0"	6.0"	6.0"	6.0"	6.0"	6.0"	6.0"	6.0"	4.6"	6.0"	6.0"	6.0"	6.0"	6.0"
	+/- 110 PSF	542 LB/FT	330 LB/FT	6.0"	6.0"	6.0"	6.0"	6.0"	6.0"	6.0"	6.0"	6.0"	4.0"	6.0"	6.0"	6.0"	6.0"	5.9"
	+/- 120 PSF	645 LB/FT	360 LB/FT	6.0"	6.0"	6.0"	6.0"	6.0"	6.0"	5.5"	6.0"	6.0"		6.0"	6.0"	6.0"	6.0"	5.0"
	+/- 130 PSF	749 LB/FT	390 LB/FT	6.0"	6.0"	6.0"	6.0"	6.0"	6.0"	4.9"	6.0"	6.0"		6.0"	6.0"	6.0"	6.0"	4.4"
	+/- 140 PSF	852 LB/FT	420 LB/FT	6.0"	6.0"	6.0"	6.0"	6.0"	6.0"	4.4"	6.0"	6.0"		6.0"	6.0"	6.0"	6.0"	3.9"
	+/- 150 PSF	955 LB/FT	450 LB/FT	6.0"	6.0"	6.0"	6.0"	6.0"	6.0"	4.1"	6.0"	6.0"		6.0"	6.0"	6.0"	6.0"	3.5"
	+/- 160 PSF	1059 LB/FT	480 LB/FT	6.0"	6.0"	6.0"	6.0"	6.0"	6.0"		5.7"	5.5"		6.0"	6.0"	6.0"	6.0"	3.2"
	+/- 170 PSF	1162 LB/FT	510 LB/FT	6.0"	6.0"	6.0"	6.0"	6.0"	6.0"		5.2"	5.1"		6.0"	6.0"	6.0"	6.0"	2.9"
	+/- 180 PSF	1266 LB/FT	540 LB/FT	6.0"	6.0"	6.0"	6.0"	6.0"	6.0"		4.8"	4.7"		6.0"	6.0"	6.0"	6.0"	2.7"
	+/- 190 PSF	1369 LB/FT	570 LB/FT	6.0"	6.0"	6.0"	5.6"	6.0"	5.9"		4.5"	4.4"		6.0"	6.0"	6.0"	5.8"	2.5"
	+/- 200 PSF	1472 LB/FT	600 LB/FT	6.0"	6.0"	6.0"	5.2"	6.0"	5.5"		4.2"	4.1"		6.0"	6.0"	6.0"	5.4"	2.3"
	+/- 210.0 PSF	1576 LB/FT	630 LB/FT	6.0"	5.9"	6.0"	4.9"	6.0"	5.2"		4.0"	3.9"		6.0"	5.8"	5.7"	5.1"	
	+/- 213.3 PSF	1610 LB/FT	640 LB/FT	6.0"	5.7"	6.0"	4.8"	6.0"	5.1"		3.9"	3.8"		6.0"	5.7"	5.6"	5.0"	
84"	+/- 60 PSF	345 LB/FT	210 LB/FT	6.0"	6.0"	6.0"	6.0"	6.0"	6.0"	6.0"	6.0"	6.0"	6.0"	6.0"	6.0"	6.0"	6.0"	6.0"
	+/- 70 PSF	475 LB/FT	245 LB/FT	6.0"	6.0"	6.0"	6.0"	6.0"	6.0"	6.0"	6.0"	6.0"	5.1"	6.0"	6.0"	6.0"	6.0"	6.0"
	+/- 80 PSF	606 LB/FT	280 LB/FT	6.0"	6.0"	6.0"	6.0"	6.0"	6.0"	6.0"	6.0"	6.0"	4.3"	6.0"	6.0"	6.0"	6.0"	5.6"
	+/- 90 PSF	737 LB/FT	315 LB/FT	6.0"	6.0"	6.0"	6.0"	6.0"	6.0"	5.5"	6.0"	6.0"		6.0"	6.0"	6.0"	6.0"	4.6"
	+/- 100 PSF	867 LB/FT	350 LB/FT	6.0"	6.0"	6.0"	6.0"	6.0"	6.0"	4.9"	6.0"	6.0"		6.0"	6.0"	6.0"	6.0"	4.0"
	+/- 110 PSF	998 LB/FT	385 LB/FT	6.0"	6.0"	6.0"	6.0"	6.0"	6.0"	4.3"	6.0"	6.0"		6.0"	6.0"	6.0"	6.0"	3.5"
	+/- 120 PSF	1129 LB/FT	420 LB/FT	6.0"	6.0"	6.0"	6.0"	6.0"	6.0"	3.9"	5.7"	5.5"		6.0"	6.0"	6.0"	6.0"	3.1"
	+/- 130 PSF	1259 LB/FT	455 LB/FT	6.0"	6.0"	6.0"	6.0"	6.0"	6.0"		5.1"	5.0"		6.0"	6.0"	6.0"	6.0"	2.8"
	+/- 140 PSF	1390 LB/FT	490 LB/FT	6.0"	6.0"	6.0"	5.8"	6.0"	6.0"		4.7"	4.6"		6.0"	6.0"	6.0"	6.0"	2.5"
	+/- 150 PSF	1521 LB/FT	525 LB/FT	6.0"	6.0"	6.0"	5.3"	6.0"	5.6"		4.3"	4.2"		6.0"	6.0"	6.0"	5.6"	2.3"
	+/- 160 PSF	1652 LB/FT	560 LB/FT	6.0"	5.9"	6.0"	4.9"	6.0"	5.2"		4.0"	3.9"		6.0"	5.8"	5.8"	5.2"	
	+/- 170 PSF	1782 LB/FT	595 LB/FT	6.0"	5.5"	6.0"	4.6"	6.0"	4.8"		3.7"			6.0"	5.4"	5.4"	4.8"	
	+/- 180 PSF	1913 LB/FT	630 LB/FT	6.0"	5.1"	6.0"	4.3"	5.8"	4.5"		3.5"			6.0"	5.1"	5.1"	4.5"	
	+/- 187 PSF	2004 LB/FT	655 LB/FT	6.0"	4.9"	6.0"	4.1"	5.6"	4.3"		3.3"			6.0"	4.9"	4.8"	4.3"	
96"	+/- 40 PSF	303 LB/FT	160 LB/FT	6.0"	6.0"	6.0"	6.0"	6.0"	6.0"	6.0"	6.0"	6.0"	6.0"	6.0"	6.0"	6.0"	6.0"	6.0"
	+/- 50 PSF	463 LB/FT	200 LB/FT	6.0"	6.0"	6.0"	6.0"	6.0"	6.0"	6.0"	6.0"	6.0"	5.8"	6.0"	6.0"	6.0"	6.0"	6.0"
	+/- 60 PSF	623 LB/FT	240 LB/FT	6.0"	6.0"	6.0"	6.0"	6.0"	6.0"	6.0"	6.0"	6.0"	4.6"	6.0"	6.0"	6.0"	6.0"	5.6"
	+/- 70 PSF	783 LB/FT	280 LB/FT	6.0"	6.0"	6.0"	6.0"	6.0"	6.0"	5.7"	6.0"	6.0"	3.9"	6.0"	6.0"	6.0"	6.0"	4.5"
	+/- 80 PSF	943 LB/FT	320 LB/FT	6.0"	6.0"	6.0"	6.0"	6.0"	6.0"	4.9"	6.0"	6.0"		6.0"	6.0"	6.0"	6.0"	3.8"
	+/- 90 PSF	1103 LB/FT	360 LB/FT	6.0"	6.0"	6.0"	6.0"	6.0"	6.0"	4.2"	6.0"	5.9"		6.0"	6.0"	6.0"	6.0"	3.2"
	+/- 100 PSF	1263 LB/FT	400 LB/FT	6.0"	6.0"	6.0"	6.0"	6.0"	6.0"		5.3"	5.2"		6.0"	6.0"	6.0"	6.0"	2.8"
	+/- 110 PSF	1423 LB/FT	440 LB/FT	6.0"	6.0"	6.0"	5.8"	6.0"	6.0"		4.8"	4.7"		6.0"	6.0"	6.0"	6.0"	2.5"
	+/- 120 PSF	1583 LB/FT	480 LB/FT	6.0"	6.0"	6.0"	5.3"	6.0"	5.6"		4.3"	4.2"		6.0"	6.0"	6.0"	5.6"	2.3"
	+/- 130 PSF	1743 LB/FT	520 LB/FT	6.0"	5.7"	6.0"	4.8"	6.0"	5.1"		3.9"	3.8"		6.0"	5.7"	5.7"	5.1"	
	+/- 140 PSF	1903 LB/FT	560 LB/FT	6.0"	5.3"	6.0"	4.4"	6.0"	4.6"		3.6"			6.0"	5.3"	5.3"	4.7"	
	+/- 150 PSF	2063 LB/FT	600 LB/FT	6.0"	4.9"	6.0"	4.1"	5.6"	4.3"		3.3"			6.0"	4.9"	4.9"	4.4"	
	+/- 160 PSF	2223 LB/FT	640 LB/FT	6.0"	4.5"	6.0"	3.5"	5.2"	3.8"		3.1"			6.0"	4.6"	4.5"	4.1"	
	+/- 171 PSF	2399 LB/FT	684 LB/FT	6.0"	4.2"		3.3"	4.8"	3.5"					5.6"	4.2"	4.2"	3.8"	

RICHARD NEET, P.E.
PE# 86488 CA# 9885

DECEMBER 22, 2023

FL

ANCHOR NOTES:

1. ANCHORS SHALL BE INSTALLED IN ACCORDANCE WITH MANUFACTURERS' RECOMMENDATIONS.
2. MINIMUM EMBEDMENT SHALL BE AS NOTED IN ANCHOR SCHEDULE. MINIMUM EMBEDMENT AND EDGE DISTANCE EXCLUDES STUCCO, FOAM, BRICK, AND OTHER WALL FINISHES.
3. ANCHOR SCHEDULE APPLIES TO ALL PRODUCTS CERTIFIED HEREIN, BUT ONLY PROVIDES MAXIMUM ALLOWABLE ANCHOR SPACING. MAXIMUM ALLOWABLE SPANS AND PRESSURES INDICATED IN SPAN SCHEDULE SHALL APPLY.
4. WHERE EXISTING STRUCTURE IS WOOD FRAMING, EXISTING CONDITIONS MAY VARY. FIELD VERIFY THAT FASTENERS ARE INTO ADEQUATE WOOD FRAMING MEMBERS, NOT INTO PLYWOOD.
5. WOOD BUCKS (BY OTHERS) SHALL BE ANCHORED PROPERLY TO TRANSFER LOADS TO THE EXISTING STRUCTURE.
6. MACHINE SCREWS SHALL HAVE MINIMUM OF 1/2" ENGAGEMENT OF THREADS IN BASE ANCHOR AND MAY HAVE EITHER A PAN HEAD, TRUSS HEAD, OR WAFER HEAD ("SIDEWALK BOLT") U.N.O.
7. SHEET METAL SCREWS SHALL BE INSTALLED WITH FULL ENGAGEMENT OF THREADS INTO METAL HOST STRUCTURE.
8. DESIGNATES ANCHOR CONDITIONS WHICH ARE NOT ACCEPTABLE FOR USE.
9. ANCHORS TO GROUT-FILLED BLOCK SHALL PENETRATE THROUGH FACE SHELL INTO GROUTED CELL.
10. † - #14 FASTENERS MAY BE SUBSTITUTED WITH 1/4" ELCO DRIL-FLEX FASTENERS.
11. SEE PAGE 18 FOR WALL MOUNT AND BUILD-OUT MOUNT REACTION KEY.

PRODUCT REVISED
as complying with the Florida
Building Code
Acceptance No 23-1010.06
Expiration Date 04/25/2027
By
Miami Dade Product Control

ENGINEERING EXPRESS®
POSTAL ADDRESS:
2234 NORTH FEDERAL HWY #7664
BOCA RATON, FL 33431
ENGINEERINGEXPRESS.COM

QUALITAS MANUFACTURING INC. (QMI)
1661 GLENLAKE AVE
ITASCA, IL 60143
PHONE: (866) 980-1750

QOMPACT3 - AL8 ROLL-UP HURRICANE SHUTTER (WALL & BUILD-OUT MOUNTS)
FBC EIGHTH EDITION (2023) | MIAMI-DADE NOA

REMARKS	DRWN	CHKD	DATE
PREV. SUB. NOA 22-0727.08	EPR	RWN	08/05/22
2023 FBC UPDATE	EPR	RWN	09/26/23
ADDRESSING MD COMMENTS	MRT	RWN	12/22/23
-	-	-	-
-	-	-	-

23-60247

SCALE: NTS UNLESS NOTED

ANCHOR SCHEDULE: BUILD-OUT MOUNT, SPANS 108"-144", ≥5/16"Ø FASTENERS

SLAT SPAN	DESIGN PRESSURE	Rx	Ry	3/8" ELCO / DEWALT CONFLEX	3/8" DEWALT SCREW BOLT+	3/8" ELCO / DEWALT CONFLEX	3/8" DEWALT SCREW BOLT+	3/8" HILTI KH-EZ	3/8" HILTI KH-EZ	5/16" DEWALT ULTRACON	3/8" DEWALT SCREW BOLT+	5/16" ITW TAPCON XL	5/16" ITW TAPCON XL	3/8" ELCO TAPFLEX	5/16" ELCO DRIL-FLEX	5/16" (410 SS) DRILL POINT SCREW	5/16" (410 SS) DRILL POINT SCREW	#20 (0.32") WOOD SCREW
				CONCRETE	CONCRETE	CONCRETE	CONCRETE	CONCRETE	CONCRETE	CONCRETE	GFB	GFB	HOLLOW BLOCK	1/4" ALUM. OR STEEL	1/4" STEEL	1/4" STEEL	1/4" ALUM.	WOOD
				4510 PSI	3000 PSI	1819 PSI	3000 PSI	3000 PSI	3000 PSI	3500 PSI	ASTM C90	ASTM C90	ASTM C90	6061-T6 OR A36	A36	A36	6063-T6	G=0.55
				EMBED: 3.50"	EMBED: 3.25"	EMBED: 3.50"	EMBED: 3.25"	EMBED: 3.25"	EMBED: 3.25"	EMBED: 2.00"	EMBED: 3.25"	EMBED: 2.25"	EMBED: 1.75"	-	-	-	-	EMBED: 4.00"
				EDGE= 3.75"	EDGE= 5.00"	EDGE= 3.75"	EDGE= 4.00"	EDGE= 5.00"	EDGE= 4.00"	EDGE= 3.13"	EDGE= 5.00"	EDGE= 4.00"	EDGE= 4.00"	EDGE= 0.75"	EDGE= 0.75"	EDGE= 0.75"	EDGE= 0.63"	EDGE= 1.50"
108"	+/- 40 PSF	498 LB/FT	180 LB/FT	6.0"	6.0"	6.0"	6.0"	6.0"	6.0"	6.0"	6.0"	6.0"	6.0"	6.0"	6.0"	6.0"	6.0"	6.0"
	+/- 50 PSF	689 LB/FT	225 LB/FT	6.0"	6.0"	6.0"	6.0"	6.0"	6.0"	6.0"	6.0"	6.0"	4.6"	6.0"	6.0"	6.0"	6.0"	5.2"
	+/- 60 PSF	880 LB/FT	270 LB/FT	6.0"	6.0"	6.0"	6.0"	6.0"	6.0"	5.4"	6.0"	6.0"		6.0"	6.0"	6.0"	6.0"	4.1"
	+/- 70.0 PSF	1072 LB/FT	315 LB/FT	6.0"	6.0"	6.0"	6.0"	6.0"	6.0"	4.6"	6.0"	6.0"		6.0"	6.0"	6.0"	6.0"	3.4"
	+/- 80.0 PSF	1263 LB/FT	360 LB/FT	6.0"	6.0"	6.0"	6.0"	6.0"	6.0"	3.9"	5.5"	5.4"		6.0"	6.0"	6.0"	6.0"	2.9"
	+/- 90.0 PSF	1454 LB/FT	405 LB/FT	6.0"	6.0"	6.0"	5.8"	6.0"	6.0"		4.8"	4.7"		6.0"	6.0"	6.0"	6.0"	2.5"
	+/- 100.0 PSF	1645 LB/FT	450 LB/FT	6.0"	6.0"	6.0"	5.2"	6.0"	5.5"		4.3"	4.2"		6.0"	6.0"	6.0"	5.6"	
	+/- 110.0 PSF	1837 LB/FT	495 LB/FT	6.0"	5.6"	6.0"	4.7"	6.0"	4.9"		3.8"	3.8"		6.0"	5.6"	5.6"	5.0"	
	+/- 120.0 PSF	2028 LB/FT	540 LB/FT	6.0"	5.1"	6.0"	4.2"	5.8"	4.5"		3.5"			6.0"	5.1"	5.1"	4.6"	
	+/- 130.0 PSF	2219 LB/FT	585 LB/FT	6.0"	4.6"	6.0"	3.6"	5.3"	4.1"		3.2"			6.0"	4.7"	4.7"	4.2"	
	+/- 140.0 PSF	2410 LB/FT	630 LB/FT	6.0"	4.3"	6.0"	3.3"	4.9"	3.5"					5.8"	4.3"	4.3"	3.9"	
	+/- 150.0 PSF	2602 LB/FT	675 LB/FT	6.0"	3.7"		3.1"	4.6"	3.3"					5.3"	4.0"	4.0"	3.6"	
	+/- 160.0 PSF	2793 LB/FT	720 LB/FT	6.0"	3.5"			4.3"	3.1"					5.0"	3.7"	3.7"	3.4"	
120"	+/- 30 PSF	456 LB/FT	150 LB/FT	6.0"	6.0"	6.0"	6.0"	6.0"	6.0"	6.0"	6.0"	6.0"	6.0"	6.0"	6.0"	6.0"	6.0"	6.0"
	+/- 40 PSF	680 LB/FT	200 LB/FT	6.0"	6.0"	6.0"	6.0"	6.0"	6.0"	6.0"	6.0"	6.0"	4.9"	6.0"	6.0"	6.0"	6.0"	5.3"
	+/- 50 PSF	905 LB/FT	250 LB/FT	6.0"	6.0"	6.0"	6.0"	6.0"	6.0"	5.5"	6.0"	6.0"	3.8"	6.0"	6.0"	6.0"	6.0"	4.0"
	+/- 60 PSF	1129 LB/FT	300 LB/FT	6.0"	6.0"	6.0"	6.0"	6.0"	6.0"	4.5"	6.0"	6.0"		6.0"	6.0"	6.0"	6.0"	3.2"
	+/- 70.0 PSF	1353 LB/FT	350 LB/FT	6.0"	6.0"	6.0"	6.0"	6.0"	6.0"	3.8"	5.2"	5.2"		6.0"	6.0"	6.0"	6.0"	2.7"
	+/- 80.0 PSF	1578 LB/FT	400 LB/FT	6.0"	6.0"	6.0"	5.5"	6.0"	5.8"		4.5"	4.4"		6.0"	6.0"	6.0"	6.0"	2.3"
	+/- 90.0 PSF	1802 LB/FT	450 LB/FT	6.0"	5.8"	6.0"	4.8"	6.0"	5.1"		4.0"	3.9"		6.0"	5.8"	5.8"	5.3"	
	+/- 100.0 PSF	2026 LB/FT	500 LB/FT	6.0"	5.2"	6.0"	4.3"	6.0"	4.5"		3.5"			6.0"	5.2"	5.2"	4.7"	
	+/- 110.0 PSF	2250 LB/FT	550 LB/FT	6.0"	4.7"	6.0"	3.6"	5.4"	4.1"		3.2"			6.0"	4.7"	4.7"	4.2"	
	+/- 120.0 PSF	2475 LB/FT	600 LB/FT	6.0"	4.2"		3.3"	4.9"	3.5"					5.7"	4.3"	4.3"	3.9"	
	+/- 130.0 PSF	2699 LB/FT	650 LB/FT	6.0"	3.6"		3.0"	4.5"	3.2"					5.3"	3.9"	3.9"	3.5"	
	+/- 140.0 PSF	2923 LB/FT	700 LB/FT	6.0"	3.4"			4.2"						4.9"	3.6"	3.6"	3.3"	
	+/- 150.0 PSF	3148 LB/FT	750 LB/FT		3.1"			3.6"						4.5"	3.4"	3.4"	3.1"	
	+/- 152.0 PSF	3192 LB/FT	760 LB/FT		3.1"			3.6"						4.5"	3.3"	3.3"	3.0"	
132"	+/- 30 PSF	598 LB/FT	165 LB/FT	6.0"	6.0"	6.0"	6.0"	6.0"	6.0"	6.0"	6.0"	6.0"	5.8"	6.0"	6.0"	6.0"	6.0"	6.0"
	+/- 40 PSF	857 LB/FT	220 LB/FT	6.0"	6.0"	6.0"	6.0"	6.0"	6.0"	6.0"	6.0"	6.0"	4.2"	6.0"	6.0"	6.0"	6.0"	4.3"
	+/- 50 PSF	1116 LB/FT	275 LB/FT	6.0"	6.0"	6.0"	6.0"	6.0"	6.0"	4.7"	6.0"	6.0"		6.0"	6.0"	6.0"	6.0"	3.3"
	+/- 60 PSF	1375 LB/FT	330 LB/FT	6.0"	6.0"	6.0"	6.0"	6.0"	6.0"	3.9"	5.3"	5.2"		6.0"	6.0"	6.0"	6.0"	2.7"
	+/- 70 PSF	1634 LB/FT	385 LB/FT	6.0"	6.0"	6.0"	5.4"	6.0"	5.7"		4.4"	4.4"		6.0"	6.0"	6.0"	5.9"	2.3"
	+/- 80 PSF	1893 LB/FT	440 LB/FT	6.0"	5.6"	6.0"	4.7"	6.0"	4.9"		3.8"	3.8"		6.0"	5.7"	5.7"	5.1"	
	+/- 90 PSF	2152 LB/FT	495 LB/FT	6.0"	4.9"	6.0"	4.1"	5.7"	4.3"		3.4"			6.0"	5.0"	5.0"	4.5"	
	+/- 100 PSF	2411 LB/FT	550 LB/FT	6.0"	4.4"	6.0"	3.4"	5.1"	3.6"		3.0"			6.0"	4.5"	4.5"	4.0"	
	+/- 110 PSF	2670 LB/FT	605 LB/FT	6.0"	3.7"		3.1"	4.6"	3.3"					5.4"	4.0"	4.0"	3.6"	
	+/- 120 PSF	2929 LB/FT	660 LB/FT	6.0"	3.4"			4.2"	3.0"					5.0"	3.7"	3.7"	3.3"	
	+/- 130 PSF	3188 LB/FT	715 LB/FT		3.1"			3.6"						4.6"	3.4"	3.4"	3.1"	
	+/- 140 PSF	3447 LB/FT	770 LB/FT					3.4"						4.2"	3.1"	3.1"		
	+/- 145 PSF	3587 LB/FT	800 LB/FT					3.2"						4.1"	3.0"	3.0"		
144"	+/- 20 PSF	440 LB/FT	120 LB/FT	6.0"	6.0"	6.0"	6.0"	6.0"	6.0"	6.0"	6.0"	6.0"	6.0"	6.0"	6.0"	6.0"	6.0"	6.0"
	+/- 30 PSF	735 LB/FT	180 LB/FT	6.0"	6.0"	6.0"	6.0"	6.0"	6.0"	6.0"	6.0"	6.0"	5.0"	6.0"	6.0"	6.0"	6.0"	5.0"
	+/- 40 PSF	1031 LB/FT	240 LB/FT	6.0"	6.0"	6.0"	6.0"	6.0"	6.0"	5.2"	6.0"	6.0"		6.0"	6.0"	6.0"	6.0"	3.6"
	+/- 50 PSF	1326 LB/FT	300 LB/FT	6.0"	6.0"	6.0"	6.0"	6.0"	6.0"	4.1"	5.5"	5.4"		6.0"	6.0"	6.0"	6.0"	2.8"
	+/- 60 PSF	1622 LB/FT	360 LB/FT	6.0"	6.0"	6.0"	5.5"	6.0"	5.8"		4.5"	4.5"		6.0"	6.0"	6.0"	6.0"	2.3"
	+/- 70 PSF	1917 LB/FT	420 LB/FT	6.0"	5.6"	6.0"	4.6"	6.0"	4.9"		3.8"	3.8"		6.0"	5.7"	5.7"	5.1"	
	+/- 80 PSF	2213 LB/FT	480 LB/FT	6.0"	4.9"	6.0"	4.0"	5.6"	4.3"		3.3"			6.0"	4.9"	4.9"	4.5"	
	+/- 90 PSF	2508 LB/FT	540 LB/FT	6.0"	4.3"	6.0"	3.3"	5.0"	3.5"					5.9"	4.4"	4.4"	3.9"	
	+/- 100 PSF	2803 LB/FT	600 LB/FT	6.0"	3.6"			4.5"	3.2"					5.3"	3.9"	3.9"	3.5"	
	+/- 110 PSF	3099 LB/FT	660 LB/FT	6.0"	3.3"			4.0"						4.8"	3.5"	3.5"	3.2"	
	+/- 120 PSF	3394 LB/FT	720 LB/FT					3.5"						4.4"	3.2"	3.2"		
	+/- 130 PSF	3690 LB/FT	780 LB/FT					3.2"						4.0"				
	+/- 140.0 PSF	3985 LB/FT	840 LB/FT											3.7"				

RICHARD NEET, P.E.
PE# 86488 CA# 9885

DECEMBER 22, 2023

FL

ANCHOR NOTES:

1. ANCHORS SHALL BE INSTALLED IN ACCORDANCE WITH MANUFACTURERS' RECOMMENDATIONS.
2. MINIMUM EMBEDMENT SHALL BE AS NOTED IN ANCHOR SCHEDULE. MINIMUM EMBEDMENT AND EDGE DISTANCE EXCLUDES STUCCO, FOAM, BRICK, AND OTHER WALL FINISHES.
3. ANCHOR SCHEDULE APPLIES TO ALL PRODUCTS CERTIFIED HEREIN, BUT ONLY PROVIDES MAXIMUM ALLOWABLE ANCHOR SPACING. MAXIMUM ALLOWABLE SPANS AND PRESSURES INDICATED IN SPAN SCHEDULE SHALL APPLY.
4. WHERE EXISTING STRUCTURE IS WOOD FRAMING, EXISTING CONDITIONS MAY VARY. FIELD VERIFY THAT FASTENERS ARE INTO ADEQUATE WOOD FRAMING MEMBERS, NOT INTO PLYWOOD.
5. WOOD BUCKS (BY OTHERS) SHALL BE ANCHORED PROPERLY TO TRANSFER LOADS TO THE EXISTING STRUCTURE.
6. MACHINE SCREWS SHALL HAVE MINIMUM OF 1/2" ENGAGEMENT OF THREADS IN BASE ANCHOR AND MAY HAVE EITHER A PAN HEAD, TRUSS HEAD, OR WAFER HEAD ("SIDEWALK BOLT") U.N.O.
7. SHEET METAL SCREWS SHALL BE INSTALLED WITH FULL ENGAGEMENT OF THREADS INTO METAL HOST STRUCTURE.
8. ▨ DESIGNATES ANCHOR CONDITIONS WHICH ARE NOT ACCEPTABLE FOR USE.
9. ANCHORS TO GROUT-FILLED BLOCK SHALL PENETRATE THROUGH FACE SHELL INTO GROUTED CELL.
10. † - #14 FASTENERS MAY BE SUBSTITUTED WITH 1/4" ELCO DRIL-FLEX FASTENERS.
11. SEE PAGE 18 FOR WALL MOUNT AND BUILD-OUT MOUNT REACTION KEY.

PRODUCT REVISED
as complying with the Florida Building Code
Acceptance No 23-1010.06
Expiration Date 08/25/2027
By
Miami Dade Product Control

ENGINEERING EXPRESS®
POSTAL ADDRESS:
2234 NORTH FEDERAL HWY #7664
BOCA RATON, FL 33431
ENGINEERINGEXPRESS.COM

QUALITAS MANUFACTURING INC. (QMI)
1661 GLENLAKE AVE
ITASCA, IL 60143
PHONE: (866) 980-1750

QOMPACT3 - AL8 ROLL-UP HURRICANE SHUTTER
(WALL & BUILD-OUT MOUNTS)
FBC EIGHTH EDITION (2023) | MIAMI-DADE NOA

REMARKS	DRWN	CHKD	DATE
PREV. SUB. NOA 22-0727.08	EPR	RWN	08/05/22
2023 FBC UPDATE	EPR	RWN	09/26/23
ADDRESSING MD COMMENTS	MRT	RWN	12/22/23

23-60247

SCALE: NTS UNLESS NOTED

ANCHOR SCHEDULE: BUILD-OUT MOUNT, SPANS 156"-236", ≥5/16"Ø FASTENERS

SLAT SPAN	DESIGN PRESSURE	Rx	Ry	3/8" ELCO / DEWALT CONFLEX	3/8" DEWALT SCREW BOLT+	3/8" ELCO / DEWALT CONFLEX	3/8" DEWALT SCREW BOLT+	3/8" HILTI KH-EZ	3/8" HILTI KH-EZ	5/16" DEWALT ULTRACON	3/8" DEWALT SCREW BOLT+	5/16" ITW TAPCON XL	5/16" ITW TAPCON XL	3/8" ELCO TAPFLEX	5/16" ELCO DRIL-FLEX	5/16" (410 SS) DRILL POINT SCREW	5/16" (410 SS) DRILL POINT SCREW	#20 (0.32") WOOD SCREW
				CONCRETE	CONCRETE	CONCRETE	CONCRETE	CONCRETE	CONCRETE	CONCRETE	GFB	GFB	HOLLOW BLOCK	1/4" ALUM. OR STEEL	1/4" STEEL	1/4" STEEL	1/4" ALUM.	WOOD
				4510 PSI	3000 PSI	1819 PSI	3000 PSI	3000 PSI	3000 PSI	3500 PSI	ASTM C90	ASTM C90	ASTM C90	6061-T6 OR A36	A36	A36	6063-T6	G=0.55
				EMBED: 3.50"	EMBED: 3.25"	EMBED: 3.50"	EMBED: 3.25"	EMBED: 3.25"	EMBED: 3.25"	EMBED: 2.00"	EMBED: 3.25"	EMBED: 2.25"	EMBED: 1.75"	-	-	-	-	EMBED: 4.00"
				EDGE= 3.75"	EDGE= 5.00"	EDGE= 3.75"	EDGE= 4.00"	EDGE= 5.00"	EDGE= 4.00"	EDGE= 3.13"	EDGE= 5.00"	EDGE= 4.00"	EDGE= 4.00"	EDGE= 0.75"	EDGE= 0.75"	EDGE= 0.75"	EDGE= 0.63"	EDGE= 1.50"
156"	+/- 20 PSF	538 LB/FT	130 LB/FT	6.0"	6.0"	6.0"	6.0"	6.0"	6.0"	6.0"	6.0"	6.0"	6.0"	6.0"	6.0"	6.0"	6.0"	6.0"
	+/- 30 PSF	871 LB/FT	195 LB/FT	6.0"	6.0"	6.0"	6.0"	6.0"	6.0"	6.0"	6.0"	6.0"	4.4"	6.0"	6.0"	6.0"	6.0"	4.3"
	+/- 40 PSF	1205 LB/FT	260 LB/FT	6.0"	6.0"	6.0"	6.0"	6.0"	6.0"	4.6"	6.0"	6.0"		6.0"	6.0"	6.0"	6.0"	3.1"
	+/- 50 PSF	1538 LB/FT	325 LB/FT	6.0"	6.0"	6.0"	5.8"	6.0"	6.0"		4.8"	4.8"		6.0"	6.0"	6.0"	6.0"	2.4"
	+/- 60 PSF	1872 LB/FT	390 LB/FT	6.0"	5.8"	6.0"	4.8"	6.0"	5.1"		4.0"	3.9"		6.0"	5.9"	5.9"	5.3"	
	+/- 70 PSF	2205 LB/FT	455 LB/FT	6.0"	4.9"	6.0"	4.1"	5.7"	4.3"		3.4"			6.0"	5.0"	5.0"	4.5"	
	+/- 80 PSF	2538 LB/FT	520 LB/FT	6.0"	4.3"	6.0"	3.3"	5.0"	3.5"					5.9"	4.4"	4.4"	3.9"	
	+/- 90 PSF	2872 LB/FT	585 LB/FT	6.0"	3.5"			4.4"	3.1"					5.2"	3.9"	3.9"	3.5"	
	+/- 100 PSF	3205 LB/FT	650 LB/FT	6.0"	3.2"			3.7"						4.7"	3.5"	3.5"	3.1"	
	+/- 110 PSF	3539 LB/FT	715 LB/FT					3.4"						4.2"	3.1"	3.1"		
	+/- 120 PSF	3872 LB/FT	780 LB/FT					3.1"						3.9"				
	+/- 124.7 PSF	4029 LB/FT	811 LB/FT											3.7"				
168"	+/- 20 PSF	635 LB/FT	140 LB/FT	6.0"	6.0"	6.0"	6.0"	6.0"	6.0"	6.0"	6.0"	6.0"	6.0"	6.0"	6.0"	6.0"	6.0"	5.9"
	+/- 30 PSF	1007 LB/FT	210 LB/FT	6.0"	6.0"	6.0"	6.0"	6.0"	6.0"	5.5"	6.0"	6.0"	3.9"	6.0"	6.0"	6.0"	6.0"	3.7"
	+/- 40 PSF	1380 LB/FT	280 LB/FT	6.0"	6.0"	6.0"	6.0"	6.0"	6.0"	4.1"	5.4"	5.4"		6.0"	6.0"	6.0"	6.0"	2.7"
	+/- 50 PSF	1753 LB/FT	350 LB/FT	6.0"	6.0"	6.0"	5.2"	6.0"	5.4"		4.3"	4.2"		6.0"	6.0"	6.0"	5.7"	
	+/- 60 PSF	2126 LB/FT	420 LB/FT	6.0"	5.1"	6.0"	4.3"	6.0"	4.5"		3.5"			6.0"	5.2"	5.3"	4.7"	
	+/- 70 PSF	2499 LB/FT	490 LB/FT	6.0"	4.4"	6.0"	3.4"	5.1"	3.6"		3.0"			6.0"	4.5"	4.5"	4.0"	
	+/- 80 PSF	2872 LB/FT	560 LB/FT	6.0"	3.6"			4.4"	3.1"					5.3"	3.9"	3.9"	3.5"	
	+/- 90 PSF	3244 LB/FT	630 LB/FT	6.0"	3.2"			3.7"						4.7"	3.4"	3.5"	3.1"	
	+/- 100 PSF	3617 LB/FT	700 LB/FT					3.3"						4.2"	3.1"	3.1"		
	+/- 110 PSF	3990 LB/FT	770 LB/FT					3.0"						3.8"				
	+/- 112.1 PSF	4068 LB/FT	785 LB/FT											3.7"				
180"	+/- 10 PSF	317 LB/FT	75 LB/FT	6.0"	6.0"	6.0"	6.0"	6.0"	6.0"	6.0"	6.0"	6.0"	6.0"	6.0"	6.0"	6.0"	6.0"	6.0"
	+/- 20 PSF	731 LB/FT	150 LB/FT	6.0"	6.0"	6.0"	6.0"	6.0"	6.0"	6.0"	6.0"	6.0"	5.4"	6.0"	6.0"	6.0"	6.0"	5.1"
	+/- 30 PSF	1144 LB/FT	225 LB/FT	6.0"	6.0"	6.0"	6.0"	6.0"	6.0"	5.0"	6.0"	6.0"		6.0"	6.0"	6.0"	6.0"	3.3"
	+/- 40 PSF	1558 LB/FT	300 LB/FT	6.0"	6.0"	6.0"	5.8"	6.0"	6.0"		4.9"	4.8"		6.0"	6.0"	6.0"	6.0"	2.4"
	+/- 50 PSF	1972 LB/FT	375 LB/FT	6.0"	5.6"	6.0"	4.6"	6.0"	4.9"		3.8"	3.8"		6.0"	5.7"	5.7"	5.2"	
	+/- 60 PSF	2386 LB/FT	450 LB/FT	6.0"	4.6"	6.0"	3.6"	5.4"	4.0"		3.2"			6.0"	4.7"	4.7"	4.3"	
	+/- 70 PSF	2799 LB/FT	525 LB/FT	6.0"	3.7"		3.1"	4.6"	3.2"					5.5"	4.0"	4.0"	3.6"	
	+/- 80 PSF	3213 LB/FT	600 LB/FT	6.0"	3.2"			4.0"						4.8"	3.5"	3.5"	3.2"	
	+/- 90 PSF	3627 LB/FT	675 LB/FT					3.3"						4.2"	3.1"	3.1"		
	+/- 100 PSF	4040 LB/FT	750 LB/FT					3.0"						3.8"				
	+/- 101.7 PSF	4111 LB/FT	763 LB/FT											3.7"				
192"	+/- 10 PSF	371 LB/FT	80 LB/FT	6.0"	6.0"	6.0"	6.0"	6.0"	6.0"	6.0"	6.0"	6.0"	6.0"	6.0"	6.0"	6.0"	6.0"	6.0"
	+/- 20 PSF	827 LB/FT	160 LB/FT	6.0"	6.0"	6.0"	6.0"	6.0"	6.0"	6.0"	6.0"	6.0"	4.9"	6.0"	6.0"	6.0"	6.0"	4.5"
	+/- 30 PSF	1283 LB/FT	240 LB/FT	6.0"	6.0"	6.0"	6.0"	6.0"	6.0"	4.5"	5.9"	5.9"		6.0"	6.0"	6.0"	6.0"	2.9"
	+/- 40 PSF	1739 LB/FT	320 LB/FT	6.0"	6.0"	6.0"	5.3"	6.0"	5.6"		4.4"	4.3"		6.0"	6.0"	6.0"	5.9"	
	+/- 50 PSF	2195 LB/FT	400 LB/FT	6.0"	5.1"	6.0"	4.2"	5.9"	4.4"		3.5"			6.0"	5.2"	5.2"	4.7"	
	+/- 60 PSF	2651 LB/FT	480 LB/FT	6.0"	4.2"	6.0"	3.2"	4.9"	3.4"					5.6"	4.3"	4.3"	3.9"	
	+/- 70 PSF	3107 LB/FT	560 LB/FT	6.0"	3.3"			4.2"						5.0"	3.7"	3.7"	3.3"	
	+/- 80 PSF	3563 LB/FT	640 LB/FT					3.4"						4.3"	3.2"	3.2"		
	+/- 90 PSF	4019 LB/FT	720 LB/FT					3.0"						3.8"				
	+/- 92.9 PSF	4151 LB/FT	743 LB/FT											3.7"				
204"	+/- 10 PSF	424 LB/FT	85 LB/FT	6.0"	6.0"	6.0"	6.0"	6.0"	6.0"	6.0"	6.0"	6.0"	6.0"	6.0"	6.0"	6.0"	6.0"	6.0"
	+/- 20 PSF	924 LB/FT	170 LB/FT	6.0"	6.0"	6.0"	6.0"	6.0"	6.0"	6.0"	6.0"	6.0"	4.5"	6.0"	6.0"	6.0"	6.0"	4.1"
	+/- 30 PSF	1423 LB/FT	255 LB/FT	6.0"	6.0"	6.0"	6.0"	6.0"	6.0"	4.1"	5.4"	5.3"		6.0"	6.0"	6.0"	6.0"	2.7"
	+/- 40 PSF	1923 LB/FT	340 LB/FT	6.0"	5.8"	6.0"	4.8"	6.0"	5.1"		4.0"	4.0"		6.0"	5.9"	5.9"	5.4"	
	+/- 50 PSF	2423 LB/FT	425 LB/FT	6.0"	4.6"	6.0"	3.6"	5.4"	4.0"		3.2"			6.0"	4.7"	4.7"	4.3"	
	+/- 60 PSF	2922 LB/FT	510 LB/FT	6.0"	3.6"			4.5"	3.1"					5.3"	3.9"	3.9"	3.6"	
	+/- 70 PSF	3422 LB/FT	595 LB/FT		3.1"			3.6"						4.6"	3.3"	3.4"	3.0"	
	+/- 80 PSF	3922 LB/FT	680 LB/FT					3.1"						4.0"				
	+/- 85.4 PSF	4192 LB/FT	726 LB/FT											3.7"				
216"	+/- 10 PSF	477 LB/FT	90 LB/FT	6.0"	6.0"	6.0"	6.0"	6.0"	6.0"	6.0"	6.0"	6.0"	6.0"	6.0"	6.0"	6.0"	6.0"	6.0"
	+/- 20 PSF	1022 LB/FT	180 LB/FT	6.0"	6.0"	6.0"	6.0"	6.0"	6.0"	5.8"	6.0"	6.0"	4.1"	6.0"	6.0"	6.0"	6.0"	3.7"
	+/- 30 PSF	1566 LB/FT	270 LB/FT	6.0"	6.0"	6.0"	5.9"	6.0"	6.0"	3.8"	4.9"	4.9"		6.0"	6.0"	6.0"	6.0"	2.4"
	+/- 40 PSF	2111 LB/FT	360 LB/FT	6.0"	5.3"	6.0"	4.4"	6.0"	4.6"		3.7"			6.0"	5.4"	5.5"	4.9"	
	+/- 50 PSF	2656 LB/FT	450 LB/FT	6.0"	4.2"	6.0"	3.3"	4.9"	3.5"					5.9"	4.3"	4.3"	3.9"	
	+/- 60 PSF	3200 LB/FT	540 LB/FT	6.0"	3.3"			4.1"						4.9"	3.6"	3.6"	3.3"	
	+/- 70 PSF	3745 LB/FT	630 LB/FT					3.3"						4.2"	3.1"	3.1"		
	+/- 79 PSF	4235 LB/FT	711 LB/FT											3.7"				
228"	+/- 10 PSF	530 LB/FT	95 LB/FT	6.0"	6.0"	6.0"	6.0"	6.0"	6.0"	6.0"	6.0"	6.0"	6.0"	6.0"	6.0"	6.0"	6.0"	6.0"
	+/- 20 PSF	1121 LB/FT	190 LB/FT	6.0"	6.0"	6.0"	6.0"	6.0"	6.0"	5.3"	6.0"	6.0"	3.8"	6.0"	6.0"	6.0"	6.0"	3.4"
	+/- 30 PSF	1712 LB/FT	285 LB/FT	6.0"	6.0"	6.0"	5.4"	6.0"	5.7"		4.5"	4.5"		6.0"	6.0"	6.0"	6.0"	
	+/- 40 PSF	2303 LB/FT	380 LB/FT	6.0"	4.9"	6.0"	4.1"	5.7"	4.3"		3.4"			6.0"	5.0"	5.0"	4.6"	
	+/- 50 PSF	2894 LB/FT	475 LB/FT	6.0"	3.6"		3.0"	4.6"	3.2"					5.5"	4.0"	4.0"	3.6"	
	+/- 60 PSF	3484 LB/FT	570 LB/FT		3.0"			3.6"						4.5"	3.3"	3.3"	3.0"	
	+/- 70 PSF	4075 LB/FT	665 LB/FT					3.1"						3.9"				
	+/- 73 PSF	4276 LB/FT	697 LB/FT											3.7"				
236"	+/- 10 PSF	566 LB/FT	98 LB/FT	6.0"	6.0"	6.0"	6.0"	6.0"	6.0"	6.0"	6.0"	6.0"	6.0"	6.0"	6.0"	6.0"	6.0"	6.0"
	+/- 20 PSF	1188 LB/FT	197 LB/FT	6.0"	6.0"	6.0"	6.0"	6.0"	6.0"	5.1"	6.0"	6.0"		6.0"	6.0"	6.0"	6.0"	3.2"
	+/- 30 PSF	1810 LB/FT	295 LB/FT	6.0"	6.0"	6.0"	5.2"	6.0"	5.4"		4.3"	4.3"		6.0"	6.0"	6.0"	5.8"	
	+/- 40 PSF	2433 LB/FT	393 LB/FT	6.0"	4.6"	6.0"	3.6"	5.5"	4.0"		3.2"			6.0"	4.8"	4.8"	4.3"	
	+/- 50 PSF	3055 LB/FT	492 LB/FT	6.0"	3.5"			4.3"	3.0"					5.2"	3.8"	3.8"	3.5"	
	+/- 60 PSF	3677 LB/FT	590 LB/FT					3.4"						4.3"	3.2"	3.2"		
	+/- 70.0 PSF	4300 LB/FT	688 LB/FT											3.7"				

RICHARD NEET, P.E.
PE# 86488 CA# 9885

DECEMBER 22, 2023

FL

ANCHOR NOTES:

1. ANCHORS SHALL BE INSTALLED IN ACCORDANCE WITH MANUFACTURERS' RECOMMENDATIONS.
2. MINIMUM EMBEDMENT SHALL BE AS NOTED IN ANCHOR SCHEDULE. MINIMUM EMBEDMENT AND EDGE DISTANCE EXCLUDES STUCCO, FOAM, BRICK, AND OTHER WALL FINISHES.
3. ANCHOR SCHEDULE APPLIES TO ALL PRODUCTS CERTIFIED HEREIN, BUT ONLY PROVIDES MAXIMUM ALLOWABLE ANCHOR SPACING. MAXIMUM ALLOWABLE SPANS AND PRESSURES INDICATED IN SPAN SCHEDULE SHALL APPLY.
4. WHERE EXISTING STRUCTURE IS WOOD FRAMING, EXISTING CONDITIONS MAY VARY. FIELD VERIFY THAT FASTENERS ARE INTO ADEQUATE WOOD FRAMING MEMBERS, NOT INTO PLYWOOD.
5. WOOD BUCKS (BY OTHERS) SHALL BE ANCHORED PROPERLY TO TRANSFER LOADS TO THE EXISTING STRUCTURE.
6. MACHINE SCREWS SHALL HAVE MINIMUM OF 1/2" ENGAGEMENT OF THREADS IN BASE ANCHOR AND MAY HAVE EITHER A PAN HEAD, TRUSS HEAD, OR WAFER HEAD ("SIDEWALK BOLT") U.N.O.
7. SHEET METAL SCREWS SHALL BE INSTALLED WITH FULL ENGAGEMENT OF THREADS INTO METAL HOST STRUCTURE.
8. ▨ DESIGNATES ANCHOR CONDITIONS WHICH ARE NOT ACCEPTABLE FOR USE.
9. ANCHORS TO GROUT-FILLED BLOCK SHALL PENETRATE THROUGH FACE SHELL INTO GROUTED CELL.
10. † - #14 FASTENERS MAY BE SUBSTITUTED WITH 1/4" ELCO DRIL-FLEX FASTENERS.
11. SEE PAGE 18 FOR WALL MOUNT AND BUILD-OUT MOUNT REACTION KEY.

PRODUCT REVISED
as complying with the Florida
Building Code
Acceptance No 23-1010.06
Expiration Date 08/25/2027
By
Miami Dade Product Control

ENGINEERING EXPRESS®
POSTAL ADDRESS:
2234 NORTH FEDERAL HWY #7664
BOCA RATON, FL 33431
ENGINEERINGEXPRESS.COM

QUALITAS MANUFACTURING INC. (QMI)
1661 GLENLAKE AVE
ITASCA, IL 60143
PHONE: (866) 980-1750

QOMPACT3 - AL8 ROLL-UP HURRICANE SHUTTER
(WALL & BUILD-OUT MOUNTS)
FBC EIGHTH EDITION (2023) | MIAMI-DADE NOA

REMARKS	DRWN	CHKD	DATE
PREV. SUB. NOA 22-0727.08	EPR	RWN	08/05/22
2023 FBC UPDATE	EPR	RWN	09/26/23
ADDRESSING MD COMMENTS	MRT	RWN	12/22/23

23-60247

SCALE: NTS UNLESS NOTED

RICHARD NEET, P.E.
PE# 86488 CA# 9885

DECEMBER 22, 2023

FL

WALL/ BUILD-OUT/ TRAP MOUNT REACTION KEY (FOR USE WITH ANCHOR SCHEDULES)

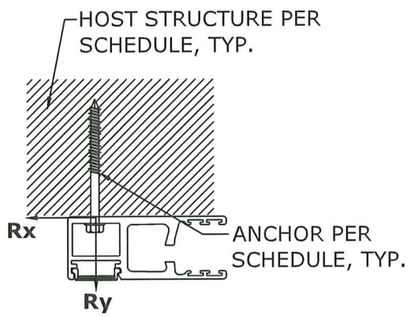

WALL MOUNT

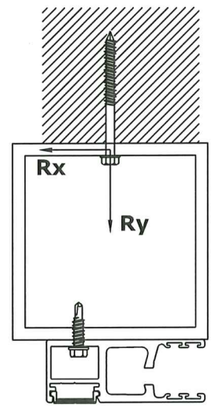

BUILD-OUT MOUNT

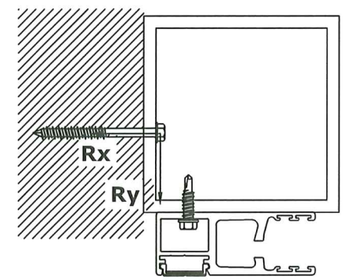

TRAP MOUNT

SEE NOA # 23-1010.07

PRODUCT REVISED
as complying with the Florida
Building Code
Acceptance No 23-1010.06
Expiration Date 08/25/2027
By
Miami Dade Product Control

ENGINEERING EXPRESS®
POSTAL ADDRESS:
2234 NORTH FEDERAL HWY #7664
BOCA RATON, FL 33431
ENGINEERINGEXPRESS.COM

QUALITAS MANUFACTURING INC. (QMI)
1661 GLENLAKE AVE
ITASCA, IL 60143
PHONE: (866) 980-1750

QOMPACT3 - AL8 ROLL-UP HURRICANE SHUTTER
(WALL & BUILD-OUT MOUNTS)
FBC EIGHTH EDITION (2023) | MIAMI-DADE NOA

REMARKS	DRWN	CHKD	DATE
PREV. SUB. NOA 22-0727.08	EPR	RVN	08/05/22
2023 FBC UPDATE	EPR	RVN	09/26/23
ADDRESSING MD COMMENTS	MRT	RVN	12/22/23
-	-	-	-
-	-	-	-

23-60247

SCALE: NTS UNLESS NOTED