MIAMI-DADE COUNTY
PRODUCT CONTROL SECTION
11805 SW 26 Street, Room 208
Miami, Florida 33175-2474
T (786) 315-2590 F (786) 315-2599
www.miamidade.gov/economy

DEPARTMENT OF REGULATORY AND ECONOMIC RESOURCES (RER)
BOARD AND CODE ADMINISTRATION DIVISION

NOTICE OF ACCEPTANCE (NOA)

Foshan Xiaoluban Door and Window Co., Ltd.
Nanhai Luocun 1 Road
Foshan, Guangdong, China 528226

SCOPE:

This NOA is being issued under the applicable rules and regulations governing the use of construction materials. The documentation submitted has been reviewed and accepted by Miami-Dade County RER - Product Control Section to be used in Miami Dade County and other areas where allowed by the Authority Having Jurisdiction (AHJ).

This NOA shall not be valid after the expiration date stated below. The Miami-Dade County Product Control Section (In Miami Dade County) and/or the AHJ (in areas other than Miami Dade County) reserve the right to have this product or material tested for quality assurance purposes. If this product or material fails to perform in the accepted manner, the manufacturer will incur the expense of such testing and the AHJ may immediately revoke, modify, or suspend the use of such product or material within their jurisdiction. RER reserves the right to revoke this acceptance if it is determined by Miami-Dade County Product Control Section that this product or material fails to meet the requirements of the applicable building code.

This product is approved as described herein and has been designed to comply with the Florida Building Code, including the High Velocity Hurricane Zone.

DESCRIPTION: Series "XLB-80 Thermal Break" Aluminum Awning Window – L.M.I.

APPROVAL DOCUMENT: Drawing No. **AD25-39**, titled "XLB-80 Thermal Break Awning Window – L.M.I.", sheets 1 through 8 of 8, dated 08/01/25, with revision R1 dated 08/01/25, prepared by MCY Engineering, Inc., signed and sealed by Yiping Wang, P.E., bearing the Miami–Dade County Product Control Approval stamp with the Notice of Acceptance number and approval date by the Miami–Dade County Product Control Section.

MISSILE IMPACT RATING: Large and Small Missile Impact Resistant

LABELING: Each unit shall bear a permanent label with the manufacturer's name or logo, city, state, model/series, and following statement: "Miami-Dade County Product Control Approved", unless otherwise noted herein.

RENEWAL of this NOA shall be considered after a renewal application has been filed and there has been no change in the applicable building code negatively affecting the performance of this product.

TERMINATION of this NOA will occur after the expiration date or if there has been a revision or change in the materials, use, and/or manufacture of the product or process. Misuse of this NOA as an endorsement of any product, for sales, advertising or any other purposes shall automatically terminate this NOA. Failure to comply with any section of this NOA shall be cause for termination and removal of NOA.

ADVERTISEMENT: The NOA number preceded by the words Miami-Dade County, Florida, and followed by the expiration date may be displayed in advertising literature. If any portion of the NOA is displayed, then it shall be done in its entirety.

INSPECTION: A copy of this entire NOA shall be provided to the user by the manufacturer or its distributors and shall be available for inspection at the job site at the request of the Building Official.

This NOA consists of this page 1 and evidence pages E-1 and E-2, as well as approval document mentioned above.

The submitted documentation was reviewed by **Manuel Perez, P.E.**

12/16/25

NOA No. 25-0911.01
Expiration Date: December 24, 2030
Approval Date: December 24, 2025

Foshan Xiaoluban Door and Window Co., Ltd.

NOTICE OF ACCEPTANCE: EVIDENCE SUBMITTED

A. DRAWINGS

1. Manufacturer's die drawings and sections.

2. Drawing No. **AD25-39**, titled "XLB-80 Thermal Break Awning Window – L.M.I.", sheets 1 through 8 of 8, dated 08/01/25, with revision R1 dated 08/01/25, prepared by MCY Engineering, Inc., signed and sealed by Yiping Wang, P.E.

B. TESTS

1. Test reports on: 1) Air Infiltration Test, per FBC, TAS 202-94
2) Uniform Static Air Pressure Test, Loading per FBC TAS 202-94
3) Water Resistance Test, per FBC, TAS 202-94
4) Large Missile Impact Test per FBC, TAS 201-94
5) Cyclic Wind Pressure Loading per FBC, TAS 203-94
6) Forced Entry Test, per ASTM F588 & FBC 2411.3.2.1, TAS202-94
along with marked-up drawings and installation diagram of Series XLB-80 thermal break aluminum awning window, prepared by Quast Consulting & Testing, Inc. Test Report No. **QCT25-7593.01-R2**, dated 07/09/25 and revised on 07/18/25 and 07/30/25, signed and sealed by Arlen Fisher, P.E.

C. CALCULATIONS

1. Anchor verification calculations and structural analysis, complying with FBC 8th Edition (2023), dated 08/21/25, prepared by MCY Engineering, Inc., signed and sealed by Yiping Wang, P.E.

2. Glazing complies with **ASTM E1300-09**

D. QUALITY ASSURANCE

1. Miami-Dade Department of Regulatory and Economic Resources (RER)

Manuel Pérez, P.E.
Product Control Examiner
NOA No. 25-0911.01
Expiration Date: December 24, 2030
Approval Date: December 24, 2025

E. MATERIAL CERTIFICATIONS

1. Notice of Acceptance No. **24-0205.08** issued to **Kuraray America, Inc.** for their "**Trosifol® Ultraclear, Clear and Color PVB Glass Interlayers**" dated 03/21/24, expiring on 07/08/29.
2. Test report No. **ATI-60520.02-106-18**, prepared by Architectural Testing, Inc. (Intertek), dated 11/09/06, with revision date 11/29/06, issued to **Ensinger, Inc.**, for their **Tecatherm® 66GF insulbar material** comprised of Polyamide with 25% glass fibers, per **ASTM G 155-00ae1**, *"Standard Practice for Operating Xenon Arc Light Apparatus for Exposure of /Non-Metallic Materials"*, per **ASTM D638-03** *"Standard Test Methods for Tensile Properties of Plastics"*, for exposed & unexposed sample per Xenon Arc after 4500 Hours, **ASTM D635-98** *"Standard Test Method for Rate of Burning and/or Extent and Time of Burning of Plastics in a Horizontal Position"* , **ASTM D1929-96** (2000)e01*"Standard Test Method for Determining Ignition Properties of Plastics"* and **ASTM D2843-99** *"Standard Test Method for Density of Smoke from the Burning or Decomposition of Plastics"*, signed and sealed by Joseph A. Reed, P.E.

F. STATEMENTS

1. Statement letter of conformance, complying with **FBC 8th Edition *(*2023)**, dated August 25, 2025, issued by MCY Engineering, Inc., signed and sealed by Yiping Wang, P.E.
2. Statement letter of no financial interest, dated August 25, 2025, issued by MCY Engineering, Inc., signed and sealed by Yiping Wang, P.E.
3. Distributor Agreement between Foshan Xiaoluban Doors and Windows Co. Ltd., Guangdong, China and Ihome Cabinets Design, Inc. 2153 Otoole Ave, San Jose, CA 95131 USA, dated 07/02/25, signed by Huang Jien and Meilan Xie, respectively.

G. OTHERS

1. None.

Manuel Pérez, P.E.
Product Control Examiner
NOA No. 25-0911.01
Expiration Date: December 24, 2030
Approval Date: December 24, 2025

FOSHAN XIAOLUBAN DOORS & WINDOWS CO., LTD
XLB-80 THERMAL BREAK AWNING WINDOW - L.M.I.

GENERAL NOTES:

- THIS PRODUCT HAS BEEN DESIGNED AND TESTED TO COMPLY WITH THE REQUIREMENTS OF THE 8TH EDITION OF FLORIDA BUILDING CODE 2023 INCLUDING HIGH VELOCITY HURRICANE ZONE (HVHZ).

- WINDOWS ARE RATED FOR LARGE MISSILE IMPACT. IMPACT SHUTTERS ARE NOT REQUIRED.

- THESE WINDOWS COMPLY WITH TAS 201 & TAS 202 & TAS 203. WINDOWS MEET WATER PENETRATION RESISTANCE. WINDOWS MEET AIR INFILTRATION RESISTANCE AND EXFILTRATION RESISTANCE (1.57 PSF).

- ANCHORS SHALL BE AS LISTED, SPACED AS SHOWN ON DETAILS. ANCHORS EMBEDMENT TO BASE MATERIAL SHALL BE BEYOND WALL DRESSING OR STUCCO.

- ANCHORING OR LOADING CONDITIONS NOT SHOWN IN THESE DETAILS ARE NOT PART OF THIS APPROVAL.

- MATERIALS INCLUDING BUT NOT LIMITED TO STEEL/ METAL SCREWS THAT COME INTO CONTACT WITH OTHER DISSIMILAR MATERIALS SHALL MEET THE REQUIREMENTS OF THE 8TH EDITION OF FLORIDA BUILDING CODE 2023 SECTION AS APPLICABLE.

- METAL STRUCTURES BY OTHERS TO BE DESIGNED TO SUPPORT THE LOADS IMPOSED BY THIS GLAZING SYSTEM AND TO TRANSFER SUCH LOADS TO THE BUILDING MAIN STRUCTURE.

- ULTIMATE LOAD OBTAINED FROM ASCE 7-22, MULTIPLY BY 0.6 SHALL BE LESS THAN OR EQUAL TO MAX. DESIGN LOAD IN THIS DOCUMENT. THE DESIGN LOADS SHOWN IN THIS DOCUMENT ARE ALLOWABLE DESIGN LOADS.

- SEALANT:
ALL FRAME CORNERS, JOINTS, MULLION SEAMS AND PERIMETER GLAZING BEAD TO FRAME INSTALLATION FASTENERS SEALED WITH SILICONE SEALANT.

- MANUFACTURER'S LABEL SHALL BE LOCATED ON A READILY VISIBLE LOCATION IN ACCORDANCE WITH SECTION 1709.9.3 OF FLORIDA BUILDING CODE LABELING TO COMPLY WITH SECTION 1709.9.2.

- HARDWARE CHECKED FOR WIND LOAD IN CLOSED POSITION ONLY; OPERATION PER MANUFACTURER'S INSTRUCTIONS. WINDOWS MUST BE FULLY CLOSED AND SECURED WHEN A HURRICANE WARNING IS ISSUED.

USE CHARTS AS FOLLOWS.

STEP 1: DETERMINE DESIGN WIND LOAD REQUIREMENTS BASED ON WIND VELOCITY, BLDG. HEIGHT, WIND ZONE USING APPLICABLE ASCE 7-22 STANDARD OR WIND TUNNEL REPORTS.

STEP 2: SEE SHEET 02 FOR APPROVED TYPICAL ELEVATION SIZE AND DESIGN LOAD.

STEP 3: ANCHOR TYPE SEE SHEET 03. ANCHOR SPACING SEE SHEET 02.

STEP 4: THE LOWEST VALUE RESULTING FROM STEPS 2 & 3 THAT EXCEED THE DESIGN WIND PRESSURES DETERMINED THRU STEP 1 SHALL APPLY TO ENTIRE SYSTEM.

ABBREVIATIONS AND SYMBOLS

G.B. - GLASS BITE
D.L.O. - DAYLITE OPENING
F.H. - FRAME HEIGHT
F.W. - FRAME WIDTH
W/ - WITH
W/O - WITHOUT
O.C. - ON CENTER

C / 7 — SECTION NUMBER / SHEET NUMBER

MIAMI DADE COUNTY

PRODUCT APPROVED
As complying with the Florida Building Code
NOA-No. 25-0911.01
Approval Date: 12/25/2025
By: Manuel Perez
Miami-Dade Product Control

YIMING WANG
STATE OF FLORIDA
LICENSE No 55983
PROFESSIONAL ENGINEER
C.A.N. 28977
September 18th, 2025

MCY ENGINEERING, INC.
GLAZING CONSULTANTS
12781 MIRAMAR PKWY.STE.301
MIRAMAR, FL 33027 P: 305.588.5224
www.MCYEngineering.com mcy@mcyengineering.com

XLB-80 THERMAL BREAK AWNING WINDOW - L.M.I.

FOSHAN XIAOLUBAN DOOR & WINDOW CO., LTD
NANHAI LUOCUN RONG 1 ROAD
FOSHAN, CHINA 528226
cherry.wen@csagroup.org

Rev. No.	Date	Drawn By	Description
R1	08.01.2025	JAMES	NEW APPLICATION

Drawn Date 08.01.2025
Scale AS SHOWN

DRAWING NO.
AD25-39

COVER

Sheet No.
1 OF 8

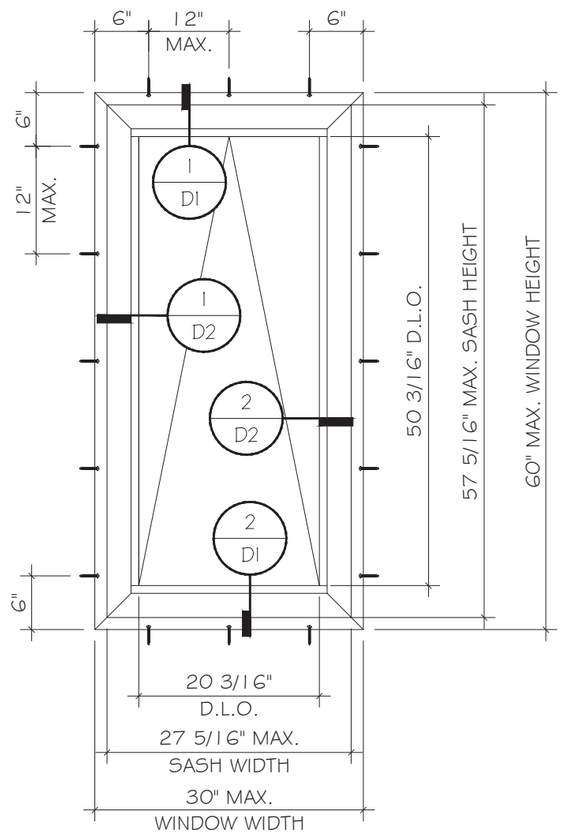

TYPICAL EXTERIOR ELEVATION

MAX. ALLOWABLE DESIGN LOAD FOR SIZE SHOWN ABOVE OR SMALLER AS PERMITTED BY FBC
+75.0 PSF -75.0 PSF

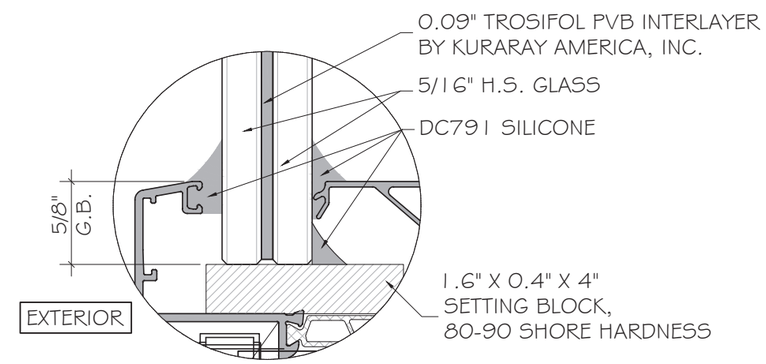

G1 LAMINATED GLASS 23/32" NOMINAL OVERALL

NOTE:
GLASS COMPLIES WITH ASTM E1300-09 (3 SEC. GUSTS).

MIAMI DADE COUNTY

PRODUCT APPROVED
As complying with the Florida Building Code
NOA No. 25-0911.01
Approval Date: 12/25/2025
By: Manuel Perez
Miami-Dade Product Control

YIPING WANG P.E.
STRUCTURAL
LICENSE
No 55883
STATE OF FLORIDA
PROFESSIONAL ENGINEER
September 18th, 2025

MCY ENGINEERING, INC.
GLAZING CONSULTANTS
12781 MIRAMAR PKWY. STE.301
MIRAMAR, FL 33027 P: 305.588.5224
www.MCYEngineering.com mcy@mcyengineering.com

XLB-80 THERMAL BREAK AWNING WINDOW - L.M.I.
FOSHAN XIAOLUBAN DOOR & WINDOW CO., LTD
NANHAI LUOCUN RONG 1 ROAD
FOSHAN, CHINA 528226
cherry.wen@csagroup.org

Rev. No.	Date	Drawn By	Description
R1	08.01.2025	JAMES	NEW APPLICATION

Drawn Date	Scale
08.01.2025	AS SHOWN

DRAWING NO.
AD25-39

E1

Sheet No.
2 OF 8

TYPICAL ANCHOR TYPES (see elevation for anchor spacing):

ANCHOR TYPE 'A' - 1/4" DIA. ULTRACON+ BY 'DEWALT' (Fu=164 KSI, Fy=148 KSI)
INTO 2BY WOOD BUCKS OR WOOD STRUCTURE WITH 1 1/2" MIN. PENETRATION.
OR DIRECTLY INTO CONCRETE W/ 1 3/4" MIN. INTO EMBEDMENT.
OR DIRECTLY INTO BLOCKS W 1 3/4" MIN. EMBEDMENT. (JAMB ONLY)

ANCHOR TYPE 'B' - 1/4" DIA. SELF-DRILLING SCREWS, GRADE 5(Fu=120KSI, Fy=92KSI)
INTO F.B.C. APPROVED MULLIONS OR METAL STRUCTURES.
(3) THREADS MIN. PENETRATION BEYOND METAL SUBSTRATE.
(STEEL IN CONTACT WITH ALUMINUM TO BE PLATED OR PAINTED)

TYPICAL EDGE DISTANCE
INTO CONCRETE OR MASONRY= 1 1/2" MIN.
INTO WOOD = 1" MIN.
INTO METAL STRUCTURE = 1/2" MIN.

SUBSTRATE
WOOD AT HEAD/JAMB:SG=0.55MIN.
CONCRETE AT JAMB/HEAD/SILL: f'c=3000 PSI MIN.
C-90 GROUT FILLED BLOCK AT JAMB: f'm=2 KSI.
ALUMINUM AT JAMB/HEAD/SILL: 1/8" THK. MIN. (6063-T5, MIN)
STEEL AT JAMB/HEAD/SILL:12GA THK. MIN. ASTM A653 GRADE 33 (Fy=33 KSI) MIN.

NOTE:
METAL STRUCTURES OR WOOD STRUCTURES BY OTHERS TO BE DESIGNED AND ANCHORED PROPERLY TO SUPPORT THE LOADS IMPOSED BY THIS GLAZING SYSTEM AND TO TRANSFER SUCH LOADS TO THE BUILDING MAIN STRUCTURE.

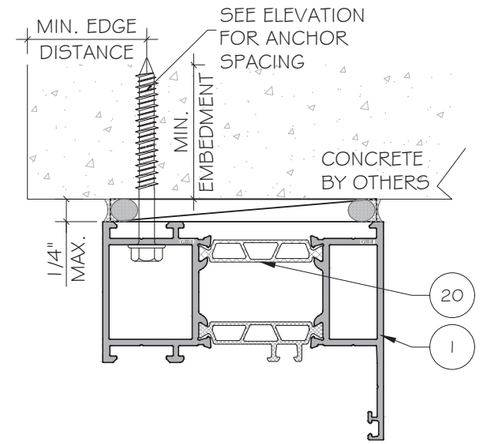

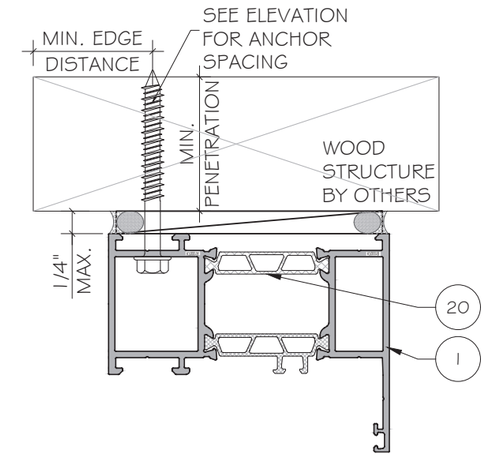

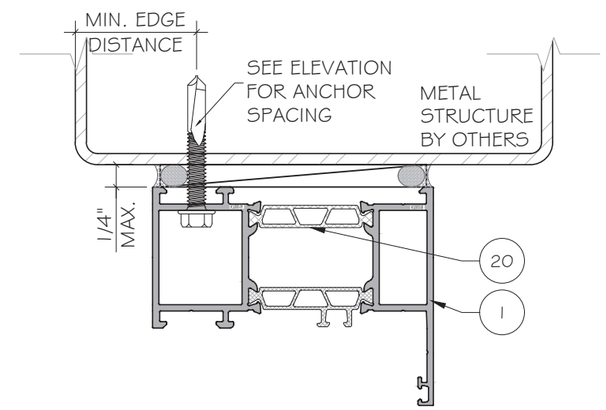

MIAMI DADE COUNTY

PRODUCT APPROVED
As complying with the Florida Building Code
NOA No. 25-0911.01
Approval Date: 12/25/2025
By: Manuel Perez
Miami-Dade Product Control

YIPING WANG, P.E.
PRODUCT APPROVAL
FBPE #55983
C.A.N. 28877
STATE OF FLORIDA PROFESSIONAL ENGINEER
No 55983
September 18th, 2025

MCY ENGINEERING, INC.
GLAZING CONSULTANTS
12781 MIRAMAR PKWY.STE.301
MIRAMAR, FL 33027 P: 305.588.5224
www.MCYEngineering.com mcy@mcyengineering.com

XLB-80 THERMAL BREAK AWNING WINDOW - L.M.I.

FOSHAN XIAOLUBAN DOOR & WINDOW CO., LTD
NANHAI LUOCUN RONG 1 ROAD
FOSHAN, CHINA 528226
cherry.wen@csagroup.org

Rev. No.	Date	Drawn By	Description
R1	08.01.2025	JAMES	NEW APPLICATION

Drawn Date 08.01.2025
Scale AS SHOWN

DRAWING NO.
AD25-39

A1

Sheet No.
3 OF 8

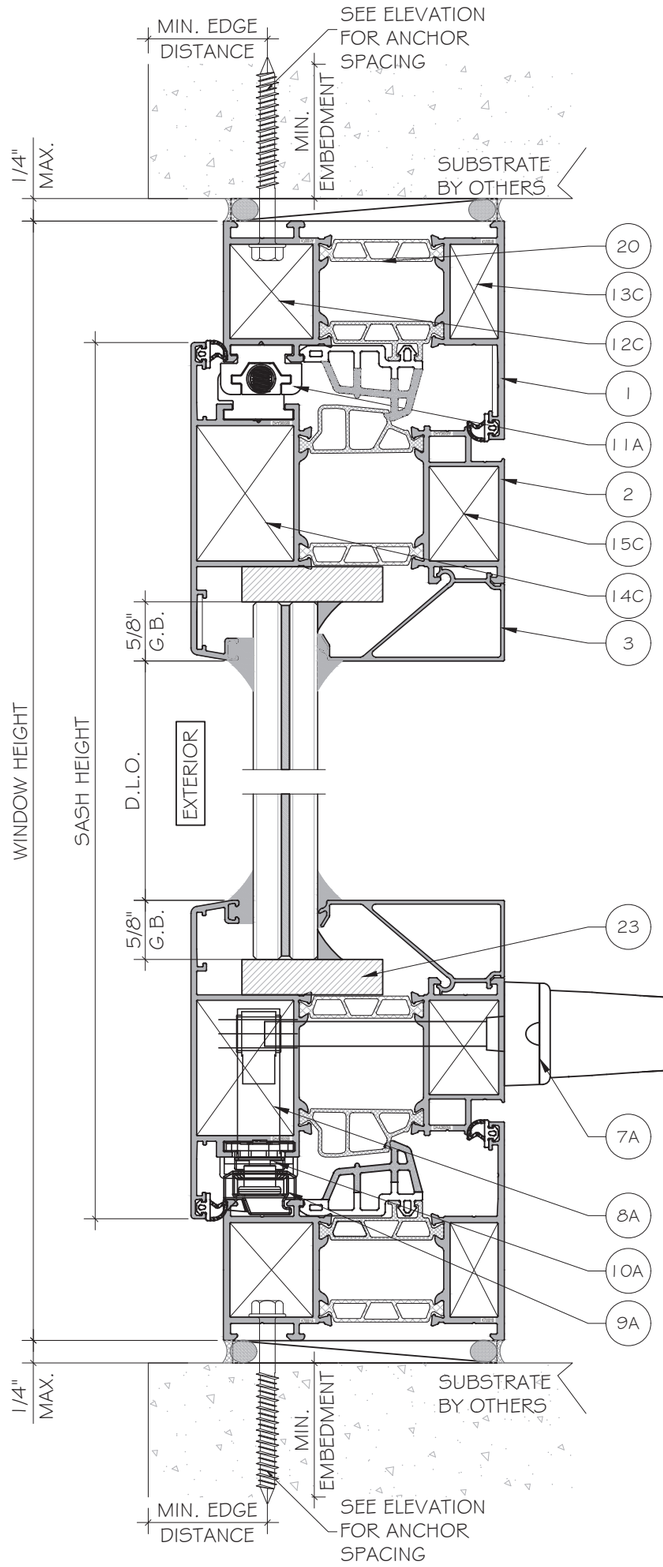

1 / D1 DETAIL

2 / D1 DETAIL

MIAMI DADE COUNTY

PRODUCT APPROVED
As complying with the Florida Building Code
NOA-No. 25-0911.01
Approval Date: 12/25/2025
By: Manuel Perez
Miami-Dade Product Control

YIPING WANG
LICENSE
No 55983
STATE OF FLORIDA
PROFESSIONAL ENGINEER

September 18th, 2025

MCY ENGINEERING, INC.
GLAZING CONSULTANTS
12781 MIRAMAR PKWY, STE.301
MIRAMAR, FL 33027 P: 305.588.5224
www.MCYEngineering.com mcy@mcyengineering.com

XLB-80 THERMAL BREAK AWNING WINDOW - L.M.I.

FOSHAN XIAOLUBAN DOOR & WINDOW CO., LTD
NANHAI LUOCUN RONG 1 ROAD
FOSHAN, CHINA 528226
cherry.wen@csagroup.org

Rev. No.	Date	Drawn By	Description
R1	08.01.2025	JAMIE S	NEW APPLICATION

Drawn Date	Scale
08.01.2025	AS SHOWN

DRAWING NO.
AD25-39

D1

Sheet No.
4 OF 8

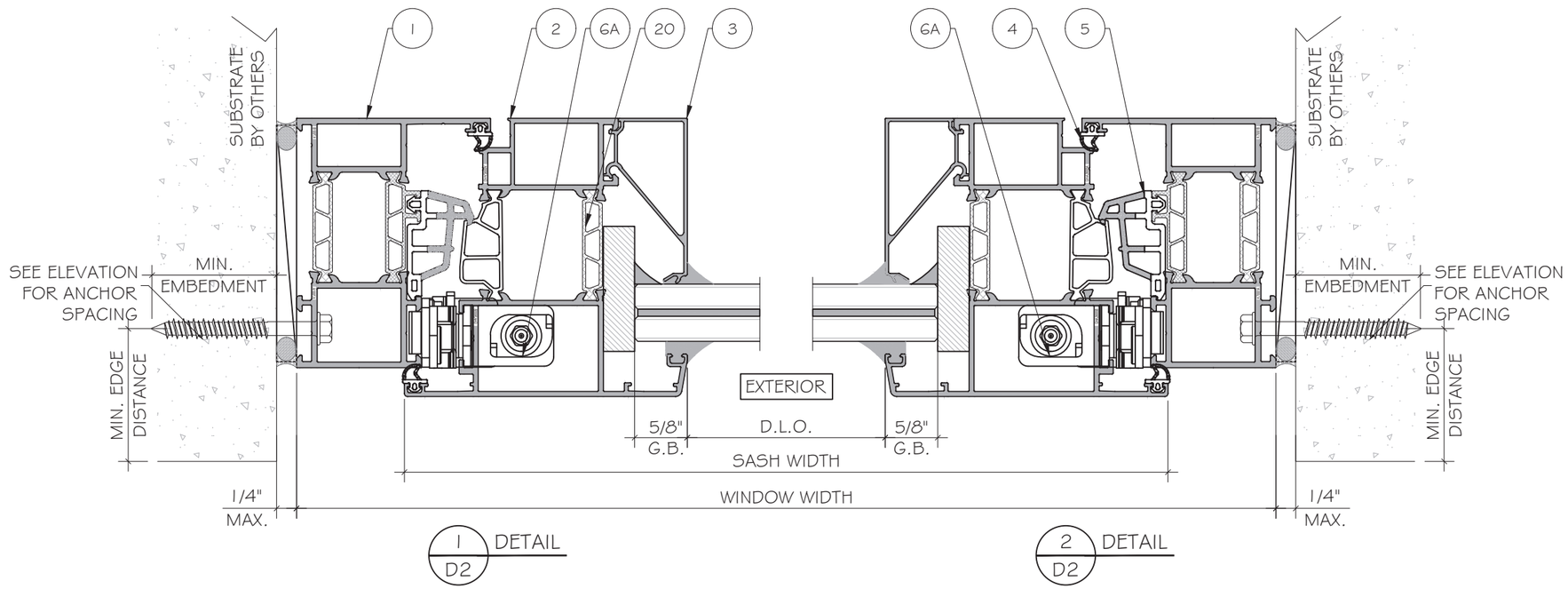

MIAMI DADE COUNTY

PRODUCT APPROVED
As complying with the Florida Building Code
NOA-No. 25-0911.01
Approval Date: 12/25/2025
By: Manuel Perez
Miami-Dade Product Control

YIPING WANG, P.E.
FLORIDA REGISTRATION
LIC. #55983
C.A.N. 28977
STATE OF FLORIDA
PROFESSIONAL ENGINEER
LICENSE
No 55983

September 18th, 2025

MCY ENGINEERING, INC.
GLAZING CONSULTANTS
12781 MIRAMAR PKWY. STE.301
MIRAMAR, FL 33027 P: 305.588.5224
www.MCYEngineering.com mcy@mcyengineering.com

XLB-80 THERMAL BREAK AWNING WINDOW - L.M.I.

FOSHAN XIAOLUBAN DOOR & WINDOW CO., LTD
NANHAI LUOCUN RONG 1 ROAD
FOSHAN, CHINA 528226
cherry.wen@csagroup.org

Rev. No.	Date	Drawn By	Description
R1	08.01.2025	JAMES	NEW APPLICATION

Drawn Date	Scale
08.01.2025	AS SHOWN

DRAWING NO.
AD25-39

D2

Sheet No.
5 OF 8

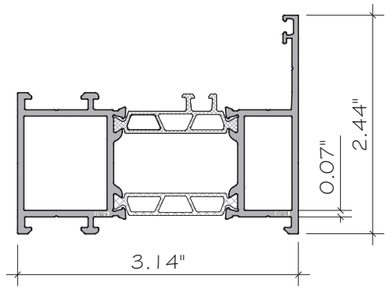

1 FRAME
ALUM. 6063-T6

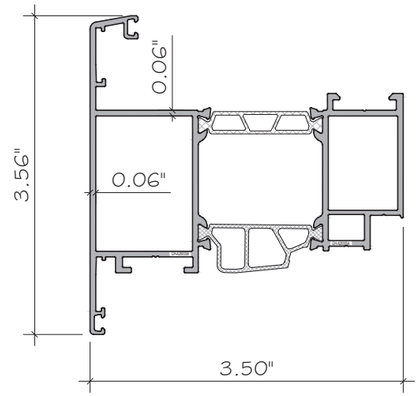

2 SASH
ALUM. 6063-T6

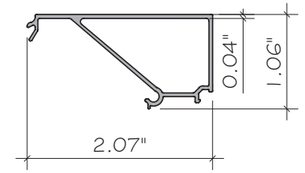

3 GLAZING BEAD
ALUM. 6063-T6

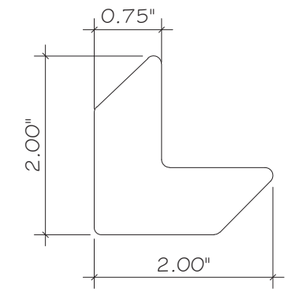

18 CORNER KEY
STAINLESS STEEL

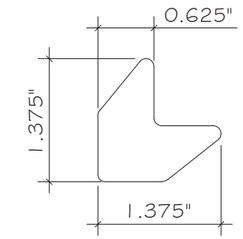

19 CORNER KEY
STAINLESS STEEL

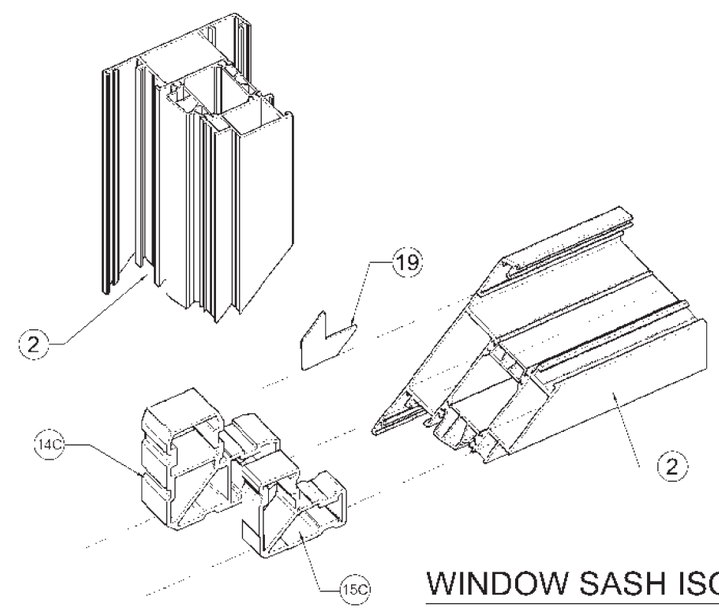

WINDOW SASH ISOMETRIC DETAIL

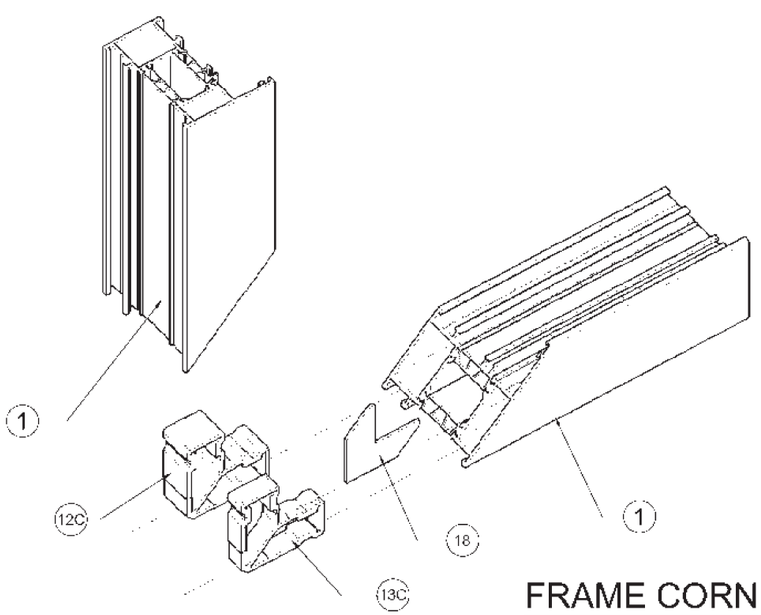

FRAME CORNER ISOMETRIC DETAIL

MIAMI DADE COUNTY

PRODUCT APPROVED
As complying with the Florida Building Code
NOA-No. 25-0911.01
Approval Date: 12/25/2025
By: Manuel Perez
Miami-Dade Product Control

YIPING WANG P.E.
LICENSE
No 55883
STATE OF FLORIDA
PROFESSIONAL ENGINEER
LICENSE #55983
C.A.N. 28877
September 18th, 2025

MCY ENGINEERING, INC.
GLAZING CONSULTANTS
12781 MIRAMAR PKWY. STE.301
MIRAMAR, FL 33027 P: 305.588.5224
www.MCYEngineering.com mcy@mcyengineering.com

XLB-80 THERMAL BREAK AWNING WINDOW - L.M.I.

FOSHAN XIAOLUBAN DOOR & WINDOW CO., LTD
NANHAI LUOCUN RONG 1 ROAD
FOSHAN, CHINA 528226
cherry.wen@csagroup.org

Rev. No.	Date	Drawn By	Description
R1	08.01.2025	JAMES	NEW APPLICATION

Drawn Date 08.01.2025
Scale AS SHOWN

DRAWING NO.
AD25-39

PART

Sheet No.
6 OF 8

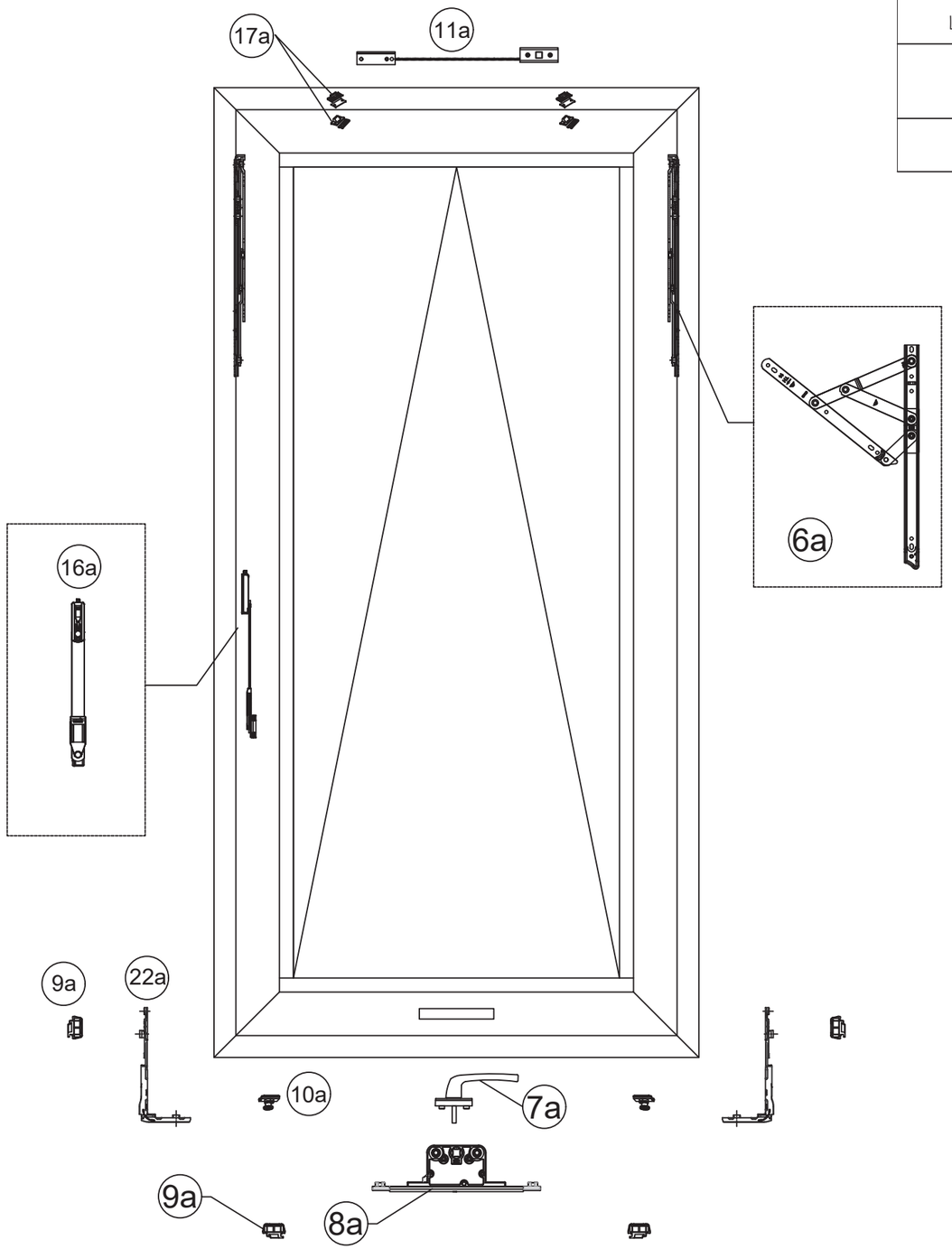

HARDWARE

ITEM	QUANTITY	LOCATION
OPERATING HANDLE	1	CENTER OF BOTTOM RAIL
KEEPER	6	SILL, 6" FROM JAMBS. 12" AND 33" FROM SILL. SECURED TO FRAME USING TWO #7-18X1" FH SCREW PER KEEPER.
LIMIT STOP	1	RIGHT JAMB (FROM INTERIOR). SECURED TO FRAME AND SASH GROOVES.
HINGE	2	SECURED TO JAMB USING THREE #7 X 1" FH SCREWS. SECURED TO SASH USING FOUR DIA. 3/16" X 13/16" FH SCREWS.
SNUBBER	2	HEAD, 6" FROM JAMBS. SECURED BY FRAME AND SASH GROOVES.

MIAMI DADE COUNTY

PRODUCT APPROVED
As complying with the Florida Building Code
NOA-No. 25-0911.01
Approval Date: 12/25/2025
By: Manuel Perez
Miami-Dade Product Control

YIPING WANG
STRUCTURAL
REGISTRATION
#55983
C.A.N. 5583
LICENSE
No 55983
STATE OF FLORIDA
PROFESSIONAL ENGINEER
September 18th, 2025

MCY ENGINEERING, INC.
GLAZING CONSULTANTS
12781 MIRAMAR PKWY.STE.301
MIRAMAR, FL 33027 P: 305.588.5224
www.MCYEngineering.com mcy@mcyengineering.com

XLB-80 THERMAL BREAK AWNING WINDOW - L.M.I.

FOSHAN XIAOLUBAN DOOR & WINDOW CO., LTD
NANHAI LUOCUN RONG 1 ROAD
FOSHAN, CHINA 528226
cherry.wen@csagroup.org

Rev. No.	Date	Drawn By	Description
R1	08.01.2025	JAMES	NEW APPLICATION

Drawn Date 08.01.2025
Scale AS SHOWN

DRAWING NO.
AD25-39

HARDWARE

Sheet No.
7 OF 8

BILL OF MATERIALS

ITEM	DESCRIPTION	MATERIAL	REMARKS
1	FRAME	ALUM. 6063-T6	XINHE
2	SASH	ALUM. 6063-T6	XINHE
3	GLAZING BEAD	ALUM. 6063-T6	XINHE
4	SASH GASKET	EPDM	HAIDA
5	FRAME GASKET	EPDM	HAIDA
6a	HINGE	STAINLESS STEEL	ROTO
7a	HANDLE	ALUMINUM ALLOY	ROTO
8a	LOCK	KIRSITE	ROTO
9a	LOCKHOLDER	KIRSITE	ROTO
10a	LOCKPOINT	KIRSITE	ROTO
11a	SAFETY ROPE	ALUMINUM ALLOY+STEEL WIRE	-
12c	FRAME ANGLE BRACKET	ALUMINUM ALLOY	GENHO
13c	FRAME ANGLE BRACKET	ALUMINUM ALLOY	GENHO
14c	SASH ANGLE BRACKET	ALUMINUM ALLOY	GENHO
15c	SASH ANGLE BRACKET	ALUMINUM ALLOY	GENHO
16a	HINGE	KIRSITE	KNG
17a	LOCKPOINT&HOLDER	KIRSITE	ROTO
18	CORNER KEY	STAINLESS STEEL	GENHO
19	CORNER KEY	STAINLESS STEEL	GENHO
20	THERMAL BREAK	PA66GF25 NYLON INSULATION STRIP	RONGKEXING
21	FIN	ALUM. 6063-T6	XINHE
22a	LOCK	KIRSITE	ROTO
23	1.6" X 0.4" X 4" SETTING BLOCK, 80-90 SHORE HARDNESS	POLYVINYL CHLORIDE	-

MIAMI DADE COUNTY

PRODUCT APPROVED
As complying with the Florida Building Code
NOA-No. 25-0911.01
Approval Date: 12/25/2025
By: Manuel Perez
Miami-Dade Product Control

YIPING WANG
STRUCTURAL CERTIFICATION
#55983
C.A.N. 008397
LICENSE
No 55983
STATE OF FLORIDA
PROFESSIONAL ENGINEER
September 18th, 2025

MCY ENGINEERING, INC.
GLAZING CONSULTANTS
12781 MIRAMAR PKWY.STE.301
MIRAMAR, FL 33027 P: 305.588.5224
www.MCYEngineering.com mcy@mcyengineering.com

XLB-80 THERMAL BREAK AWNING WINDOW - L.M.I.

FOSHAN XIAOLUBAN DOOR & WINDOW CO., LTD
NANHAI LUOCUN RONG 1 ROAD
FOSHAN, CHINA 528226
cherry.wen@csagroup.org

Rev. No.	Date	Drawn By	Description
R1	08.01.2025	JAMES	NEW APPLICATION

Drawn Date	Scale
08.01.2025	AS SHOWN

DRAWING NO.
AD25-39

BOM

Sheet No.
8 OF 8