DEPARTMENT OF REGULATORY AND ECONOMIC RESOURCES (RER)
BOARD AND CODE ADMINISTRATION DIVISION

MIAMI-DADE COUNTY
PRODUCT CONTROL SECTION
11805 SW 26 Street, Room 208
Miami, Florida 33175-2474
T (786) 315-2590 F (786) 315-2599
www.miamidade.gov/economy

NOTICE OF ACCEPTANCE (NOA)

CertainTeed LLC
20 Moores Road
Malvern, PA 19355

SCOPE:

This NOA is being issued under the applicable rules and regulations governing the use of construction materials. The documentation submitted has been reviewed and accepted by Miami-Dade County RER - Product Control Section to be used in Miami-Dade County and other areas where allowed by the Authority Having Jurisdiction (AHJ).

This NOA shall not be valid after the expiration date stated below. The Miami-Dade County Product Control Section (in Miami-Dade County) and/or the AHJ (in areas other than Miami-Dade County) reserve the right to have this product or material tested for quality assurance purposes. If this product or material fails to perform in the accepted manner, the manufacturer will incur the expense of such testing and the AHJ may immediately revoke, modify, or suspend the use of such product or material within their jurisdiction. RER reserves the right to revoke this acceptance, if it is determined by Miami-Dade County Product Control Section that this product or material fails to meet the requirements of the applicable building code.

This product is approved as described herein, and has been designed to comply with the Florida Building Code including the High Velocity Hurricane Zone of the Florida Building Code.

DESCRIPTION: Landmark Series Shingles & Patriot Asphalt Shingles

LABELING: Each unit shall bear a permanent label with the manufacturer's name or logo, city, state and following statement: "Miami-Dade County Product Control Approved", unless otherwise noted herein.

RENEWAL of this NOA shall be considered after a renewal application has been filed and there has been no change in the applicable building code negatively affecting the performance of this product.

TERMINATION of this NOA will occur after the expiration date or if there has been a revision or change in the materials, use, and/or manufacture of the product or process. Misuse of this NOA as an endorsement of any product, for sales, advertising or any other purposes shall automatically terminate this NOA. Failure to comply with any section of this NOA shall be cause for termination and removal of NOA.

ADVERTISEMENT: The NOA number preceded by the words Miami-Dade County, Florida, and followed by the expiration date may be displayed in advertising literature. If any portion of the NOA is displayed, then it shall be done in its entirety.

INSPECTION: A copy of this entire NOA shall be provided to the user by the manufacturer or its distributors and shall be available for inspection at the job site at the request of the Building Official.

This NOA revises NOA # 25-0121.04 and consists of pages 1 through 7.
The submitted documentation was reviewed by Rafael Macedo.

MIAMI-DADE COUNTY APPROVED

02/12/26

ROOFING ASSEMBLY APPROVAL

Category: Roofing
Sub-Category: Asphalt Shingles
Materials Laminate
Deck Type: Wood

SCOPE

This acceptance is for **CertainTeed Landmark, Landmark (with sand zone strip)**, **Landmark Pro, Landmark Premium, Landmark Solaris, Patriot and Landmark Pro Solaris** Shingles as manufactured by **CertainTeed LLC** described in Section 2 of this Notice of Acceptance.

PRODUCT DESCRIPTION:

Product	Dimensions	Test Specifications	Product Description
Certainteed Landmark *Manufacturing Locations* #1, 2, 3, 4, 5, 6, 7, 8, 9	13¼" x 38 ¾"	TAS 110	A heavy weight, dimensional asphalt shingle.
Certainteed Landmark (with sand zone strip) *Manufacturing Locations* #3, 4, 5, 9	13¼" x 38 ¾"	TAS 110	A heavy weight, dimensional asphalt shingle.
Certainteed Landmark Pro *Manufacturing Locations* #1, 3, 4, 5, 6, 8, 9	13¼" x 38 ¾"	TAS 110	A heavy weight, dimensional asphalt shingle.
Certainteed Landmark Premium *Manufacturing Locations* # 3, 4, 8	13¼" x 38 ¾"	TAS 110	A heavy weight, dimensional asphalt shingle.
Certainteed Landmark Solaris *Manufacturing Locations* #8	13¼" x 38 ¾"	TAS 110	A heavy weight, dimensional asphalt shingle.
CertainTeed Landmark Pro Solaris *Manufacturing Location #8*	13¼" x 38 ¾"	TAS 110	A heavy weight, dimensional asphalt shingle
Certainteed Patriot *Manufacturing Locations* #3, 9	13¼" x 38 ¾"	TAS 110	A heavy weight, dimensional asphalt shingle.
Accessory Shingles	various	proprietary	Accessory shingles for hip, ridge and starter strip applications.

MANUFACTURING LOCATIONS:

1. Peachtree City, GA
2. Ennis, TX
3. Oxford, NC
4. Shakopee, MN
5. Avery (Milan), OH
6. Norwood, MA
7. Shreveport, LA
8. Wilmington, CA
9. Jonesburg, MO

EVIDENCE SUBMITTED:

Test Agency	Test Identifier	Test Name/Report	Date
PRI Asphalt Technologies, Inc.	PCTC-01-02-01	TAS 100	01/12/01
	CTC-006-02-01	TAS 100	11/12/02
	CTC-092-02-01	TAS 100	02/23/12
	CTC-091-02-01	TAS 100	02/21/12
	CTC-090-02-01	TAS 100	09/02/11
	CTC-087-02-01	TAS 100	07/07/11
	CTC-086-02-01	TAS 100	07/07/11
	CTC-101-02-01		10/05/11
	CTC-102-02-01		10/05/11
	CTC-109-02-01		01/18/12
	CTC-106-02-01		11/02/11
	CTC-105-02-01		10/31/11
	CTC-089-02-01		07/18/11
	CTC-088-02-01	TAS 100	07/18/11
	CTC-213-02-01	TAS 100	05/20/14
	CTC-212-02-01	TAS 100	05/21/14
	CTC-207-02-01	TAS 100	05/20/14
	CTC-206-02-01	TAS 100	05/20/14
	CTC-110-02-01	TAS 100	02/13/12
	CTC-109-02-01	TAS 100	02/13/12
	CTC-288-02-01	TAS 100	09/27/16
	CTC-333-02-01		11/08/17
PRI Construction Materials Technologies, LLC	256T0192	TAS 100	04/17/23
	256T0193	TAS 100	04/17/23
	256T0227	TAS 100	01/12/24
	256T0310	TAS 100	05/07/24
Underwriters Laboratories, Inc.	94NK9632	Wind uplift resistance TAS 107	11/30/00
	R684	UL 790	04/02/01
	02NK42448	Wind uplift resistance TAS 107	11/08/02
	09CA28873	Letter	07/23/09
	11CA59020	TAS 107/ ASTM D3161	01/25/12
	11NK07864	TAS 107/ ASTM D3161	09/29/11
	07CA26696	TAS 107/ ASTM D3161	09/21/07
	11CA38844	TAS 107/ ASTM D3161	01/28/12
	11CA38844	TAS 107/ ASTM D3161	01/27/12
	06CA28237	TAS 107/ ASTM D3161	09/22/06
	10NK17366	TAS 107/ ASTM D3161	01/04/11
	4786334383	TAS 107/ ASTM D3161	05/28/14
	4786307351	TAS 107/ ASTM D3161/ASTM D 3462	05/13/14
	11CA38844	TAS 107/ ASTM D3161	01/26/12
	06CA02648	TAS 107/ ASTM D3161	02/23/06
	4787084802	TAS 107/ ASTM D3161	03/14/16

4787852839	ASTM D 3462	03/24/17
4787011023	ASTM D 3462	08/01/15
4788368979	ASTM D 3462	10/30/18
4787592174	ASTM D 3462	10/21/16
4790032490	ASTM D 3462	11/30/21
4790032490	ASTM D 3462	12/06/21
4790032490	ASTM D 3462	12/08/21
4790032490	ASTM D 3462	12/09/21
4790032490	ASTM D 3462	12/10/21
4790032490	ASTM D 3462	02/25/22
4790032490	ASTM D 3462	05/11/22
4789552696	ASTM D 3462	11/03/21
4791124602	ASTM D 3462	04/30/23
4791005165	ASTM D 3462	10/26/23

LIMITATIONS:

1. Fire classification is not part of this acceptance; refer to a current Approved Roofing Materials Directory for fire ratings of this product.
2. Shall not be installed on roof mean heights in excess of 33 ft.
3. All products listed herein shall have a quality assurance audit in accordance with the Florida Building Code and Rule 61G20-3 of the Florida Administrative Code.

INSTALLATION:

1. Shingles shall be installed in compliance with Roofing Application Standard RAS 115.
2. Flashing shall be in accordance with Roofing Application Standard RAS 115
3. The manufacturer shall provide clearly written application instructions.
4. Exposure and course layout shall be in compliance with Detail 'A', attached.
5. Nailing shall be in compliance with Detail 'B', attached.

LABELING:

1. Shingles shall be labeled with the Miami-Dade Product Control approved seal as seen below or the wording "Miami-Dade County Product Control Approved".

BUILDING PERMIT REQUIREMENTS:

1. Application for building permit shall be accompanied by copies of the following:
   - **1.1** This Notice of Acceptance.
   - **1.2** Any other documents required by the Building Official or the applicable code in order to properly evaluate the installation of this system.

SHINGLE LAYOUT
DETAIL A

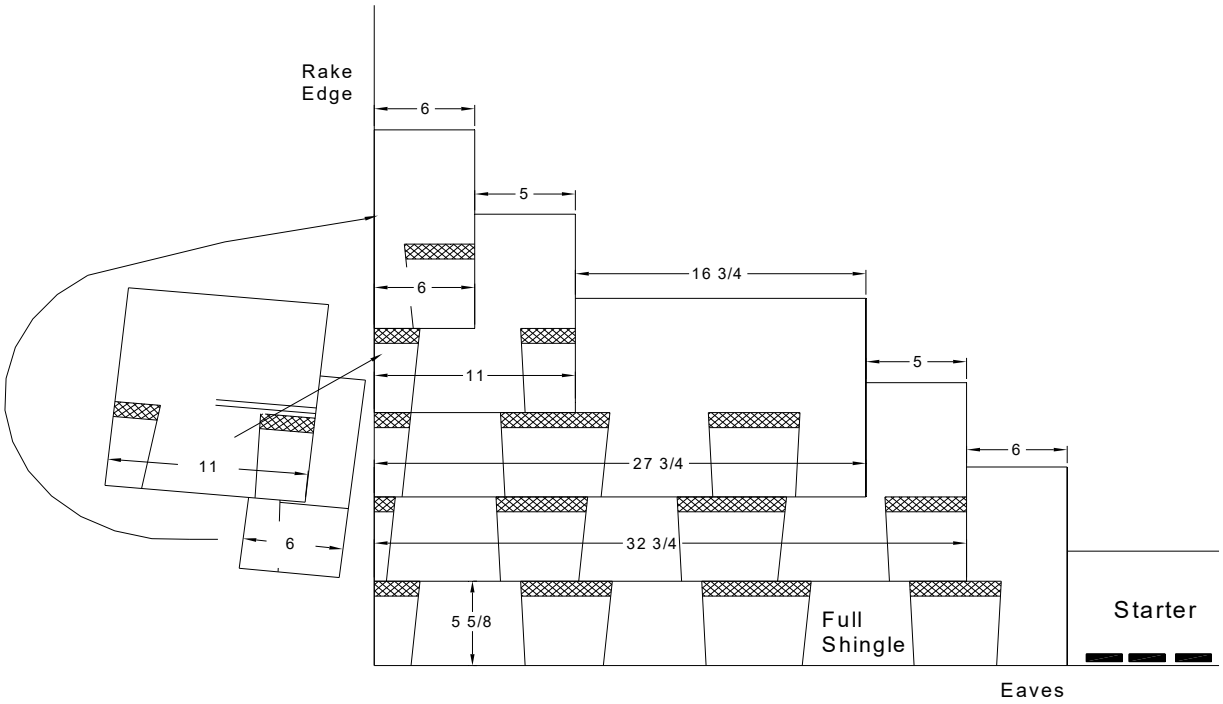

LANDMARK, LANDMARK PRO, LANDMARK PREMIUM, LANDMARK SOLARIS, AND LANDMARK PRO SOLARIS

DETAIL B

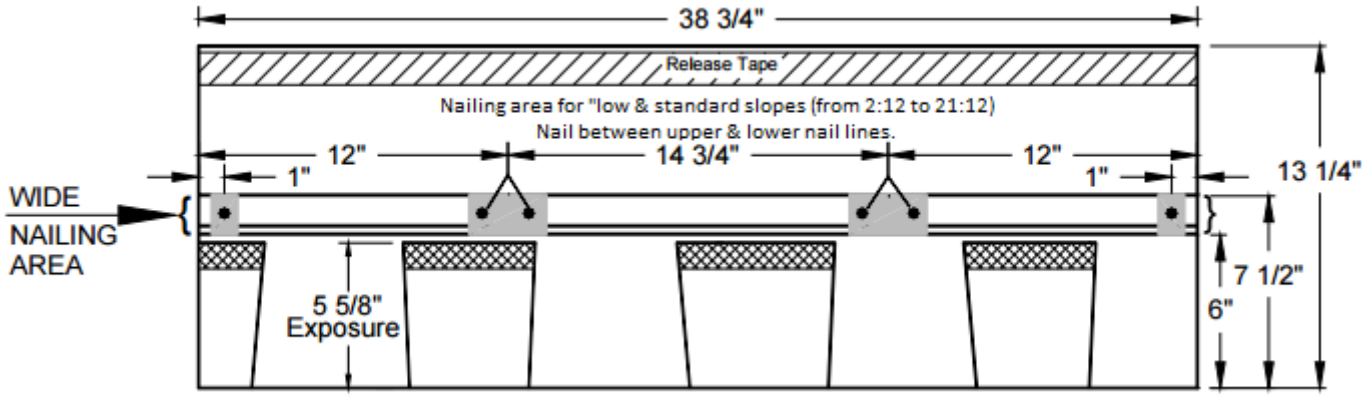

LANDMARK, LANDMARK PRO, LANDMARK PREMIUM, LANDMARK SOLARIS, AND LANDMARK PRO SOLARIS

(LOW AND STANDARD SLOPE)

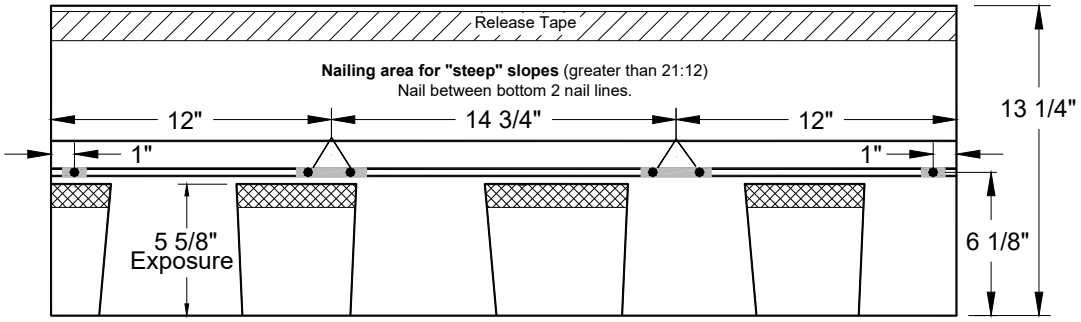

LANDMARK, LANDMARK PRO, LANDMARK PREMIUM, LANDMARK SOLARIS, AND LANDMARK PRO SOLARIS

(STEEP SLOPE)

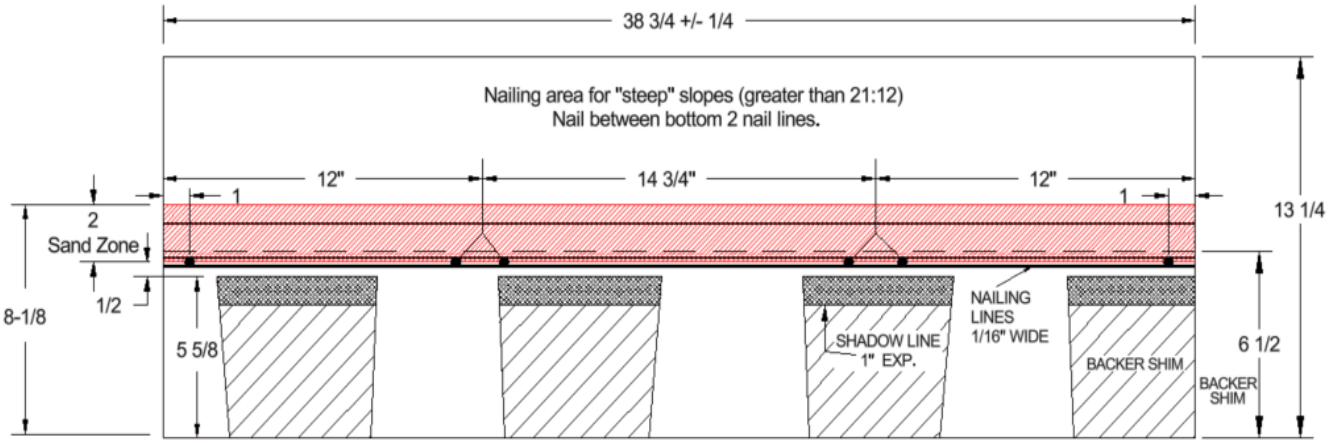

LANDMARK (WITH SANDZONE STRIP)
PATRIOT

END OF THIS ACCEPTANCE