MIAMI-DADE COUNTY
DEPARTMENT OF REGULATORY AND ECONOMIC RESOURCES (RER)
BOARD AND CODE ADMINISTRATION DIVISION

MIAMI-DADE COUNTY
PRODUCT CONTROL SECTION
11805 SW 26 Street, Room 208
Miami, Florida 33175-2474
T (786) 315-2590 F (786) 315-2599
www.miamidade.gov/economy

NOTICE OF ACCEPTANCE (NOA)

Wausau Tile, Inc.
PO Box 1520
Wausau, WI 54402-1520

SCOPE:

This NOA is being issued under the applicable rules and regulations governing the use of construction materials. The documentation submitted has been reviewed and accepted by Miami-Dade County RER -Product Control Section to be used in Miami-Dade County and other areas where allowed by the Authority Having Jurisdiction (AHJ).

This NOA shall not be valid after the expiration date stated below. The Miami-Dade County Product Control Section (in Miami-Dade County) and/or the AHJ (in areas other than Miami-Dade County) reserve the right to have this product or material tested for quality assurance purposes. If this product or material fails to perform in the accepted manner, the manufacturer will incur the expense of such testing and the AHJ may immediately revoke, modify, or suspend the use of such product or material within their jurisdiction. RER reserves the right to revoke this acceptance, if it is determined by Miami-Dade County Product Control Section that this product or material fails to meet the requirements of the applicable building code.

This product is approved as described herein, and has been designed to comply with the Florida Building Code including the High Velocity Hurricane Zone of the Florida Building Code.

DESCRIPTION: Terra Stand Screw Top Pedestal with Lok-Down

LABELING: Each unit shall bear a permanent label with the manufacturer's name or logo, city, state and following statement: "Miami-Dade County Product Control Approved", unless otherwise noted herein.

RENEWAL of this NOA shall be considered after a renewal application has been filed and there has been no change in the applicable building code negatively affecting the performance of this product.

TERMINATION of this NOA will occur after the expiration date or if there has been a revision or change in the materials, use, and/or manufacture of the product or process. Misuse of this NOA as an endorsement of any product, for sales, advertising or any other purposes shall automatically terminate this NOA. Failure to comply with any section of this NOA shall be cause for termination and removal of NOA.

ADVERTISEMENT: The NOA number preceded by the words Miami-Dade County, Florida, and followed by the expiration date may be displayed in advertising literature. If any portion of the NOA is displayed, then it shall be done in its entirety.

INSPECTION: A copy of this entire NOA shall be provided to the user by the manufacturer or its distributors and shall be available for inspection at the job site at the request of the Building Official.

This NOA renews NOA# 23-0201.04 and consists of pages 1 through 6.
The submitted documentation was reviewed by Alex Tigera.

09/03/26

ROOFING COMPONENT APPROVAL

Category: Roofing
Sub-Category: Pedestal Base for Rooftop Pavers
Materials: Polypropylene

SCOPE:

This approves **Terra Stand Screw Top Pedestal with Lok-Down**,as manufactured Wausau Tile, Inc., as described in this Notice of Acceptance. The use of this acceptance is limited to those roof assemblies where Terra Stand Screw Top Pedestal with Lok-Down, is specifically listed as an accepted component.

TRADE NAMES OF PRODUCTS MANUFACTURED OR LABELED BY APPLICANT:

Product	Dimensions	Test Specifications	Product Description
Lok-Down Terra Stand	Base : 7" x 7" Height : 2˘ " to 22"	TAS 110	Adjustable pedstal that screws up, down and tilts from side to side to provide a level surface for rooftop paver installation. Terra Stand consists of bottom plate, cylidrical core, and top plate.
Lok-Down Base Plate	7" x 7"	TAS 110	High impact copolymer polypropylene base plate for use with Lok-Down Terra Stand.
Lok-Down Top Plate	7" x 7"	TAS 110	High impact coplolymer polypropylene top plate for use with Lok Down Base Plate.
Lok-Down Paver	24" x 24" x 2"	ASTM C140	Average compressive strength shall not be less than 8,000 psi with no individual unit less than 7,000 psi.
Threaded Insert (Hockey Puck)	Diameter: 4.38” Height: .437”	TAS 110	Plate used with Lok-Down Terra Stand

TRADE NAMES OF PRODUCTS MANUFACTURED BY OTHERS:

Product	Dimensions	Test Specifications	Product Description	Manufacturer
3M Scotch-Weld Pedestal Adhesive	N/A	As Required by Miami-Dade County PCA	Adhesive for use with Terra Stand Screw Top Pedestal	3M
Stainless Steel Bolt	Length: 2-1/2”	TAS 110	Hex Head Stainless Steel Bolt.	Foyo (Changting) Marine, Co., Ltd.
Stainless Steel Washer	Diameter: 2-1/2” Thickness: 0.132”	TAS 110	Stainless Steel Washer for use with Stainless Steel Bolt.	Foyo (Changting) Marine, Co., Ltd.

MANUFACTURING LOCATION:

1. Clintonville, WI

EVIDENCE SUBMITTED:

Test Agency	Test Identifier	Test Name/Report	Date
Intertek-ATI	F0856.01-106-18	ASTM G155	05/10/16
	F0856.01-106-18	ASTM D638	05/10/16
	F0856.01-106-18	ASTM D1929	05/10/16
	F0856.01-106-18	ASTM D2843	05/10/16
	F0856.01-106-18	ASTM D635	05/10/16
PRI Construction Materials Technologies LLC.	2547T0001	Physical Properties	02/15/23

GENERAL LIMITATIONS:

1. Fire classification is not part of this acceptance.
2. The products listed herein are components of roof assemblies. Terra Stand Screw Top Pedestal may be used with any approved roof assembly listing Terra Stand Screw Top Pedestal as a component part of assembly in the Notice of Acceptance. If Terra Stand Screw Top Pedestal is not listed, a request may be made to the Authority Having Jurisdiction (AHJ) or the Miami Dade County Product Control Department for approval provided that appropiate documentation is provided to detail compatibility of the products, wind uplift resistance, and fire testing results.
3. All flashings must be in compliance with a Roof Assembly Notice of Acceptance and applicable Building Code.
4. All products listed herein shall have a quality assurance audit in accordance with the Florida Building Code and Rule 61G20-3 of the Florida Administrative Code.
5. All products listed herein shall bear the imprint or identifiable marking of the manufacturer's name or logo, city and state of manufacturing facility and the following statement: "Miami-Dade County Product Control Approved" or the Miami-Dade County Product Control Seal as shown below.

MIAMI-DADE COUNTY APPROVED

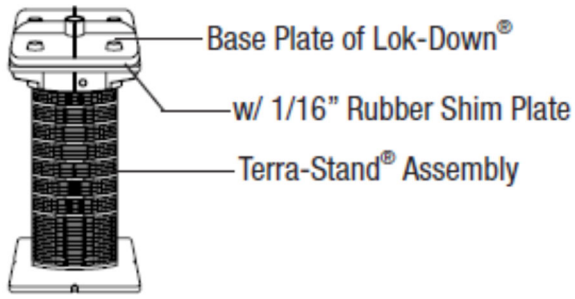

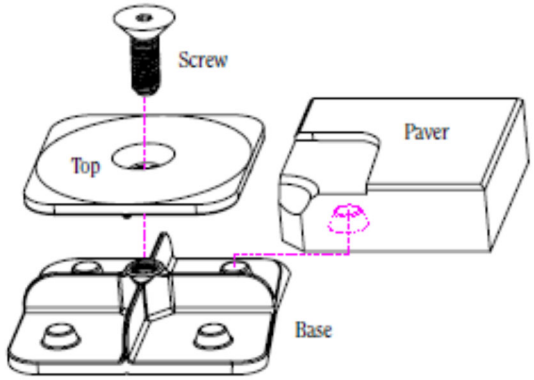

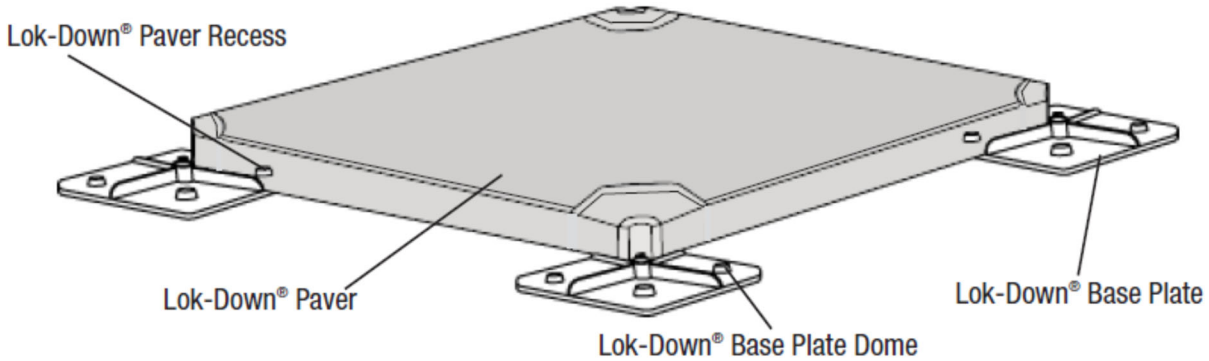

DETAILS OF TERRA-STAND PEDESTAL SYSTEM

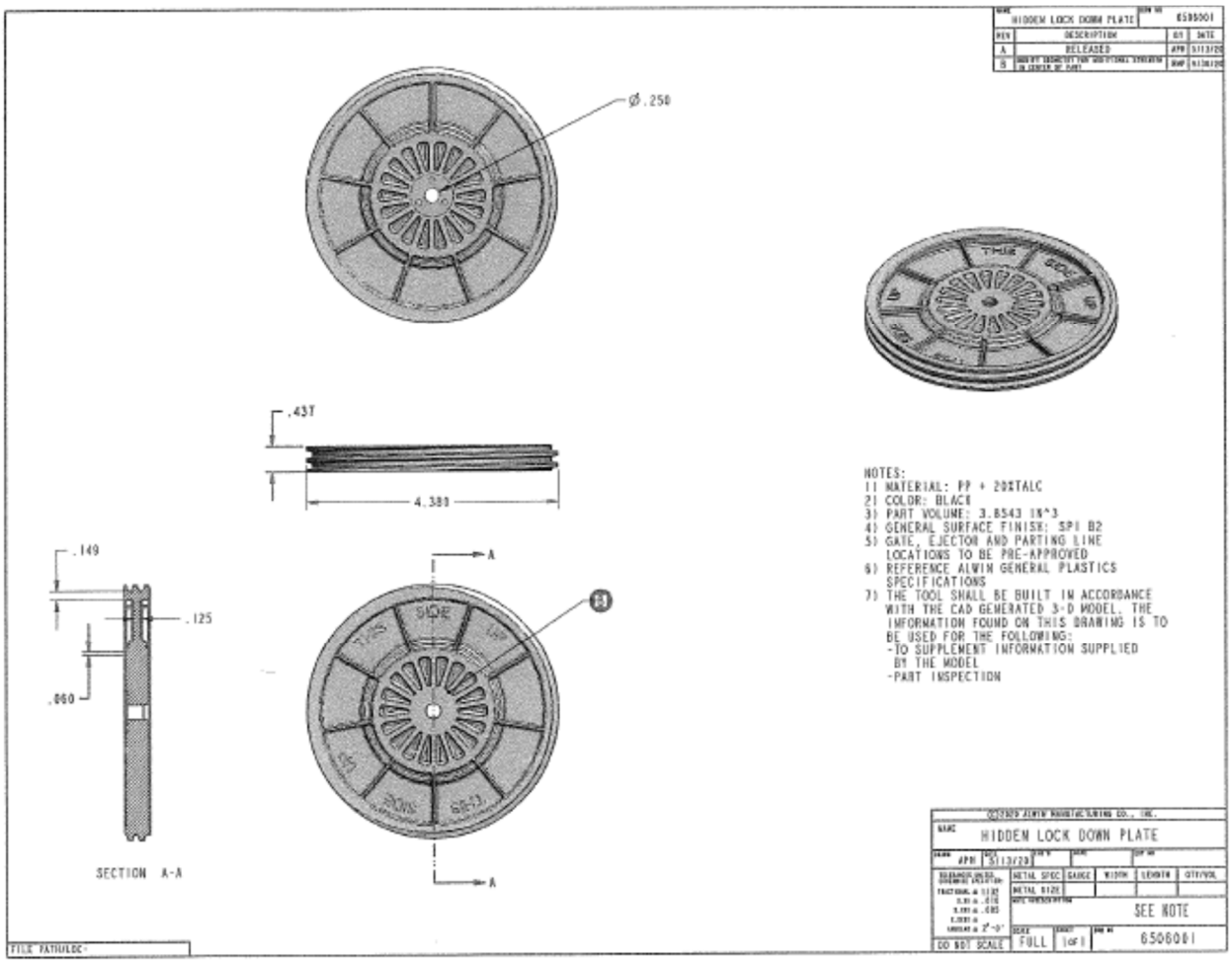

THREADED INSERT (HOCKEY PUCK)

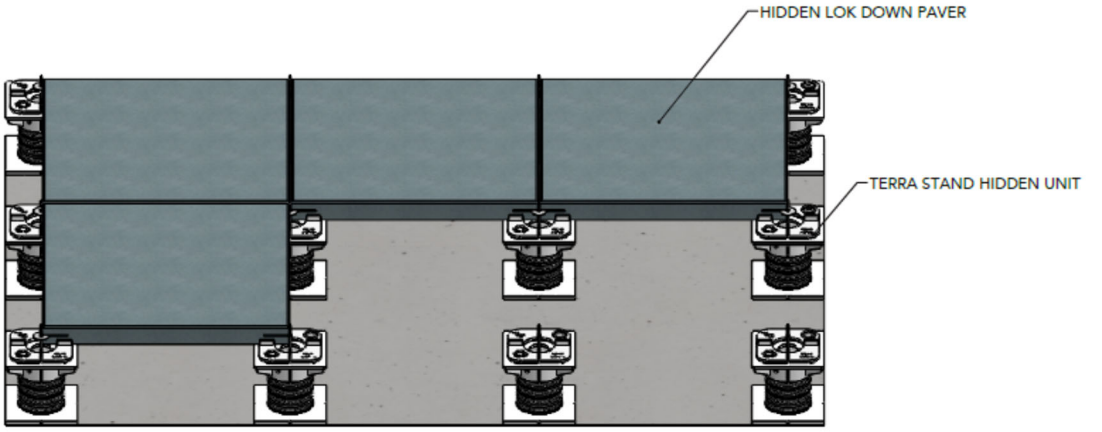

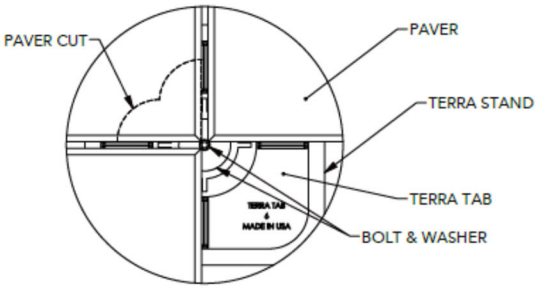

PEDESTAL NEEDS TO BE CENTERED FOR PROPER INSTALLATION

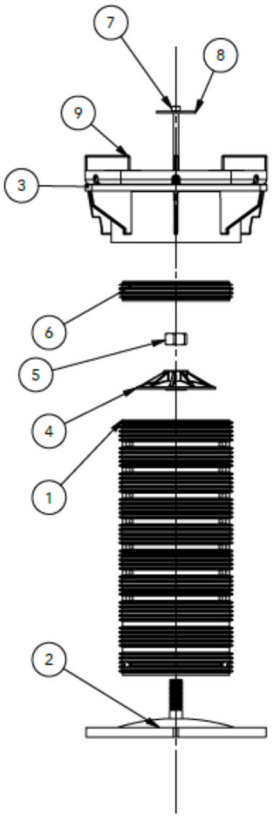

ITEM NO.	DESCRIPTION
1	TERRA CORE
2	PEDESTAL BASE
3	PEDESTAL TOP
4	LEVELING BRACKET
5	ANCHOR NUT
6	THREADED INSERT
7	SCREW
8	WASHER
9	#5 TERRA TAB 3/16" JOINT

TO ASSEMBLE PEDESTAL

1. ASSEBMLE PARTS 1,2,4 AND 5.
2. BE SURE TO LEVEL THE CORE AT THIS STEP. WILL NOT BE ABLE TO LEVEL LATER.
3. THREAD 6 INTO 3 AS FAR AS YOU CAN, WITH CORRECT SIDE UP.
4. THREAD ITEM 3 (WITH ITEM 6) ONTO ITEM 1 AT DESIRED HEIGHT.
5. START THREADING ITEM 7 AND 8 INTO ITEM 6 THROUGH ITEM 3. DO NOT TIGHTEN.
6. TIGHTEN BOLT 4 LBS USING A TORQUE WRENCH.

HIDDEN LOCKDOWN ASSEMBLY

END OF THIS ACCEPTANCE