MIAMI-DADE COUNTY
PRODUCT CONTROL SECTION
11805 SW 26 Street, Room 208
Miami, Florida 33175-2474
T (786) 315-2590 F (786) 315-2599
www.miamidade.gov/economy

DEPARTMENT OF REGULATORY AND ECONOMIC RESOURCES (RER)
BOARD AND CODE ADMINISTRATION DIVISION

NOTICE OF ACCEPTANCE (NOA)

Diebold Nixdorf, Inc.
818 Mulberry Road S.E.
Canton, OH 44707

SCOPE:

This NOA is being issued under the applicable rules and regulations governing the use of construction materials. The documentation submitted has been reviewed and accepted by Miami-Dade County RER - Product Control Section to be used in Miami Dade County and other areas where allowed by the Authority Having Jurisdiction (AHJ).

This NOA shall not be valid after the expiration date stated below. The Miami-Dade County Product Control Section (In Miami Dade County) and/or the AHJ (in areas other than Miami Dade County) reserve the right to have this product or material tested for quality assurance purposes. If this product or material fails to perform in the accepted manner, the manufacturer will incur the expense of such testing and the AHJ may immediately revoke, modify, or suspend the use of such product or material within their jurisdiction. RER reserves the right to revoke this acceptance if it is determined by Miami-Dade County Product Control Section that this product or material fails to meet the requirements of the applicable building code.

This product is approved as described herein and has been designed to comply with the Florida Building Code, including the High Velocity Hurricane Zone.

DESCRIPTION: Series "SV23185B" Aluminum Horizontal Sliding Window – L.M.I.

APPROVAL DOCUMENT: Drawing No. **1909** titled "Series SV23185B HW Aluminum Horizontal Sliding BR Window (LMI)" sheets 1 through 5 of 5, dated 12/15/15, with revision **B1** dated 07/31/18, prepared by W. W. Schaefer Engineering & Consulting, P.A., signed and sealed by Warren W. Schaefer, P.E., bearing the Miami-Dade County Product Control Revision stamp with the Notice of Acceptance number and expiration date by the Miami-Dade County Product Control Section.

MISSILE IMPACT RATING: Large and Small Missile Impact Resistant.

LABELING: Each unit shall bear a permanent label with the manufacturer's name or logo, Kall, Germany, model/series, and following statement: "Miami-Dade County Product Control Approved", unless otherwise noted herein.

RENEWAL of this NOA shall be considered after a renewal application has been filed and there has been no change in the applicable building code negatively affecting the performance of this product.

TERMINATION of this NOA will occur after the expiration date or if there has been a revision or change in the materials, use, and/or manufacture of the product or process. Misuse of this NOA as an endorsement of any product, for sales, advertising or any other purposes shall automatically terminate this NOA. Failure to comply with any section of this NOA shall be cause for termination and removal of NOA.

ADVERTISEMENT: The NOA number preceded by the words Miami-Dade County, Florida, and followed by the expiration date may be displayed in advertising literature. If any portion of the NOA is displayed, then it shall be done in its entirety.

INSPECTION: A copy of this entire NOA shall be provided to the user by the manufacturer or its distributors and shall be available for inspection at the job site at the request of the Building Official.

This NOA **revises and renews NOA No. 23-0713.17** and consists of this page 1 and evidence pages E-1, E-2 and E-3, as well as approval document mentioned above.

The submitted documentation was reviewed by **Manuel Perez, P.E.**

MIAMI-DADE COUNTY APPROVED

7/27/26

NOA No. 26-0624.05
Expiration Date: July 21, 2031
Approval Date: August 06, 2026

Diebold Nixdorf, Inc.

NOTICE OF ACCEPTANCE: EVIDENCE SUBMITTED

1. EVIDENCE SUBMITTED UNDER PREVIOUS NOA's

A. DRAWINGS

1. Manufacturer's die drawings and sections.
(Submitted under NOA No. 16-0519.09)

2. Drawing No. **1909** titled "Series SV23185B HW Aluminum Horizontal Sliding BR Window (LMI)" sheets 1 through 5 of 5, dated 12/15/15, with revision **A1** dated 07/31/18, prepared by W. W. Schaefer Engineering & Consulting, P.A., signed and sealed by Warren W. Schaefer, P.E.
(Submitted under NOA No. 18-0905.05)

B. TESTS

1. Test reports on: 1) Air Infiltration Test, per FBC, TAS 202-94
2) Uniform Static Air Pressure Test, Loading per FBC, TAS 202-94
3) Large Missile Impact Test per FBC, TAS 201-94
4) Cyclic Wind Pressure Loading per FBC, TAS 203-94
along with marked-up drawings and installation diagram of an aluminum horizontal slider w/transaction drawer opening, prepared by Intertek, Inc. Test Report No. **103536819MI-002R1D,** dated 08/15/18, signed and sealed by Gary Hartman, P.E.
(Submitted under NOA No. 18-0905.05)

2. Test reports on: 1) Air Infiltration Test, per FBC, TAS 202-94
2) Uniform Static Air Pressure Test, Loading per FBC, TAS 202-94
3) Water Resistance Test, per FBC, TAS 202-94
4) Large Missile Impact Test per FBC, TAS 201-94
5) Cyclic Wind Pressure Loading per FBC, TAS 203-94
along with marked-up drawings and installation diagram of an aluminum horizontal slider, prepared by Architectural Testing, Inc. Test Report No. **F3687-02-201-18,** dated 04/14/16, signed and sealed by Joseph A. Reed, P.E.
(Submitted under NOA No. 16-0519.09)

C. CALCULATIONS

1. Anchor verification calculations and structural analysis, complying with **FBC 6th Edition (2017)**, dated 07/31/18, prepared by W.W. Schaefer Engineering & Consulting, P.A., signed and sealed by Warren W. Schaefer, P.E.
(Submitted under NOA No. 18-0905.05)

2. Glazing complies with **ASTM E1300-04.**

D. QUALITY ASSURANCE

1. Miami-Dade Department of Regulatory and Economic Resources (RER)

Manuel Pérez, P.E.
Product Control Examiner
NOA No. 26-0624.05
Expiration Date: July 21, 2031
Approval Date: August 06, 2026

NOTICE OF ACCEPTANCE: EVIDENCE SUBMITTED

1. EVIDENCE SUBMITTED UNDER PREVIOUS NOA's (CONTINUED)

E. MATERIAL CERTIFICATIONS

1. Notice of Acceptance No. **20-0915.22** issued to **Kuraray America, Inc.** for their "**Trosifol® Ultraclear, Clear and Color PVB Glass Interlayers**" dated 11/19/20, expiring on 07/08/24.

F. STATEMENTS

1. Statement letter of conformance, complying with **FBC 8th Edition (2023)** and with **FBC 7th Edition (2020)**, dated July 1, 2023, issued by W. W. Schaefer Engineering & Consulting, P.A. and signed and sealed by Warren W. Schaefer, P.E.
(Submitted under NOA No. 23-0713.17)

2. Proposal No. **18-0697** issued by the Product Control Section, dated May 7, 2018, signed by Ishaq Chanda, P.E.
(Submitted under NOA No. 07-0403.09)

3. Distributor Agreement between Schneiders-Vetter Glass (manufacturer) and Diebold Nixdorf, Inc. (distributor), dated 10/01/18, signed by Lita Patek(president) and Jaime Howell (VP) for respective companies.
(Submitted under NOA No. 18-0905.05)

G. OTHERS

1. Notice of Acceptance No. **21-0312.17** issued to Diebold Nixdorf, Inc. for their Series "SV23185B" Aluminum Horizontal Sliding Window – L.M.I., approved on 05/06/21 and expiring on 07/21/26.

Manuel Pérez, P.E.
Product Control Examiner
NOA No. 26-0624.05
Expiration Date: July 21, 2031
Approval Date: August 06, 2026

NOTICE OF ACCEPTANCE: EVIDENCE SUBMITTED

2. NEW EVIDENCE SUBMITTED

A. DRAWINGS

1. Drawing No. **1909** titled "Series SV23185B HW Aluminum Horizontal Sliding BR Window (LMI)" sheets 1 through 5 of 5, dated 12/15/15, with revision **B1** dated 07/31/18, prepared by W. W. Schaefer Engineering & Consulting, P.A., signed and sealed by Warren W. Schaefer, P.E.

B. TESTS

1. None

C. CALCULATIONS

1. None

D. QUALITY ASSURANCE

1. Miami-Dade Department of Regulatory and Economic Resources (RER)

E. MATERIAL CERTIFICATIONS

1. Notice of Acceptance No. **24-0205.08** issued to **Kuraray America, Inc.** for their "**Trosifol® Ultraclear, Clear and Color PVB Glass Interlayers**" dated 03/21/24, expiring on 07/08/29.

F. STATEMENTS

1. Statement letter of conformance, complying with **FBC 9th Edition (2026)**, inclusive of a ***Special Limitation of Use and Compliance Requirement*** for anchors used in saltwater environment needing to comply with FBC Chapter 17, and **FBC 8th Edition (2023)**, dated July 1, 2026, issued by W. W. Schaefer Engineering & Consulting, P.A. and signed and sealed by Warren W. Schaefer, P.E.

2. Statement letter of independence and of no financial interest, issued by W. W. Schaefer Engineering & Consultant, P. A., dated June 08, 2026, signed and sealed by Warren W. Schaefer, P.E.

G. OTHERS

1. Notice of Acceptance No. **23-0713.17** issued to Diebold Nixdorf, Inc. for their Series "SV23185B" Aluminum Horizontal Sliding Window – L.M.I., approved on 08/10/23 and expiring on 07/21/26.

Manuel Pérez, P.E.
Product Control Examiner
NOA No. 26-0624.05
Expiration Date: July 21, 2031
Approval Date: August 06, 2026

The following pages in this document were submitted by the manufacturer (third party) to represent the product being approved and establish the limits of use. The pages may include technical drawings, schematics and installation details.

GENERAL NOTES:

1. THIS PRODUCT HAS BEEN TESTED, ANALYZED & APPROVED FOR DESIGN PRESSURES NOT TO EXCEED THOSE SHOWN IN THE "ALLOWABLE DESIGN PRESSURE TABLE(S)".
2. OPENINGS, BUCKING & BUCKING FASTENERS MUST BE PROPERLY DESIGNED & INSTALLED TO TRANSFER WIND LOADS TO THE STRUCTURE.
3. ALL HARDWARE & FASTENERS SHALL BE IN ACCORDANCE WITH THESE DRAWINGS & SHALL NOT VARY UNLESS SPECIFICALLY MENTIONED ON THE DRAWINGS. SPECIFIED ANCHOR EMBED TO BASE MATERIAL SHALL BE BEYOND WALL FINISH OR STUCCO.
4. THE DETAILS & SPECIFICATIONS SHOWN HEREIN REPRESENT THE PRODUCTS TESTED & PROPOSED FOR CONFORMANCE WITH THE FLORIDA BUILDING CODE PROTOCOLS TAS-201, 202 & 203 FOR LARGE MISSILE IMPACT PRODUCTS.
5. THIS PRODUCT HAS BEEN DESIGNED IN ACCORDANCE WITH AND MEETS THE REQUIREMENTS OF THE FLORIDA BUILDING CODE (FBC) INCLUDING HIGH VELOCITY HURRICANE ZONES (HVHZ).
6. IMPACT SHUTTERS ARE NOT REQUIRED WITH THIS PRODUCT.
7. ALL ANCHORS SECURING PRODUCT FRAMES TO PRESSURE TREATED BUCKS OR WOOD FRAMING SHALL BE CAPABLE OF RESISTING CORROSION CAUSED BY THE PRESSURE TREATING CHEMICALS IN THE WOOD.
8. DETERMINE THE POSITIVE & NEGATIVE DESIGN LOADS TO USE WHEN REFERENCING THESE DOCUMENTS IN ACCORDANCE WITH THE GOVERNING CODE AND GOVERNING WIND VELOCITY. FOR WIND LOAD CALCULATIONS IN ACCORDANCE WITH THE FLORIDA BUILDING CODE, A DIRECTIONALITY FACTOR OF Kd = 0.85 MAY BE APPLIED PER THE ASCE-7 STANDARD.
9. NO INCREASE IN ALLOWABLE STRESS HAS BEEN USED IN THE CERTIFICATION OF THIS PRODUCT. WIND LOAD DURATION FACTOR Cd = 1.6 WAS USED FOR WOOD SCREW ANALYSIS ONLY.
10. MATERIALS, INCLUDING BUT NOT LIMITED TO STEEL SCREWS, THAT COME INTO CONTACT WITH OTHER DISSIMILAR MATERIALS SHALL MEET THE REQUIREMENTS OF FLORIDA BUILDING CODE.

CORNER CONSTRUCTION:

FRAME AT HEAD: HEAD IS BUTTED TO THE SIDE MEMBERS, SEALED WITH SEALANT AND SECURED WITH 4 NO. 10 X 3" & 2 NO. 10 X 2" FL HD PH SMS SCREWS INTO THE HEAD MEMBER SCREW SPLINES.
FRAME AT SILL: SILL IS BUTTED TO THE SIDE MEMBERS, SEALED WITH SEALANT AND SECURED WITH 2 NO. 10 X 3" & 1 NO. 10 X 2" FL HD PH SMS SCREWS INTO THE SILL SCREW SPLINES.
SASH: VERTICAL MEMBERS ARE COPED. HORIZONTAL MEMBERS ARE BUTTED TO THE VERTICAL MEMBERS, SEALED WITH SEALANT, AND SECURED WITH 4 NO. 10 X 3" FL HD PH SMS SCREWS INTO THE HORIZONTAL MEMBER SCREW SPLINES.

NOTE: WHEN THE STANDARD SILL PAN PART NUMBER 11 IS USED, THE WINDOWS ARE NOT APPROVED FOR USE WHERE WATER INFILTRATION RESISTANCE IS REQUIRED BY THE WINDOW UNLESS THE UNITS ARE INSTALLED IN NON-HABITABLE AREAS WHERE THE UNIT & THE AREA ARE DESIGNED TO ACCEPT WATER INFILTRATION OR THE UNITS ARE INSTALLED AT LOCATIONS PROTECTED BY A CANOPY OR OVERHANG WHERE-BY THE OVERHANG(OH) RATIO IS EQUAL TO OR MORE THAN 1.0 PER FBC. WHEN THE TALL SILL PAN PART NUMBER 12 IS USED, THE WINDOW IS WATER RATED.

ALLOWABLE DESIGN PRESSURE
+65/-75 PSF

FRAME ANCHOR REQUIREMENTS TABLE

OPENING TYPE (SUBSTRATE)	FRAME/CLIP TO OPENING FASTENER TYPE	MINIMUM EMBED	MINIMUM EDGE DIST.
FRAME SCREWS			
(2) MIN. 2X_ WOOD FRAME OR BUCK (MIN. GR. 3 & G=0.55)	NO. 12 SMS OR WOOD SCREW	1 1/4"	7/8"
MIN. 18 GA. 33 KSI METAL STUD	NO. 12 GR. 5 SELF TAP/DRILL SCREW	FULL	1/2"
MIN. 1/8" THK A36 STEEL	NO. 12 GR. 5 SELF TAP/DRILL SCREW	FULL	1/2"
MIN. 1/8" THK 6063-T5 ALUM.	NO. 12 GR. 5 SELF TAP/DRILL SCREW	FULL	1/2"
MIN. C-90 CMU OR 2500 PSI CONCRETE	(1) 1/4" CONCRETE SCREW	1 1/4"	2"
INSTALLATION CLIP SCREWS			
(2) MIN. 2X_ WOOD FRAME OR BUCK (MIN. GR. 3 & G=0.55)	NO. 12 SMS OR WOOD SCREW	1 1/4"	7/8"
MIN. 18 GA. 33 KSI METAL STUD	NO. 12 GR. 5 SELF TAP/DRILL SCREW	FULL	1/2"
MIN. 1/8" THK A36 STEEL	NO. 12 GR. 5 SELF TAP/DRILL SCREW	FULL	1/2"
MIN. 1/8" THK 6063-T5 ALUM.	NO. 12 GR. 5 SELF TAP/DRILL SCREW	FULL	1/2"
MIN. C-90 CMU OR 2500 PSI CONCRETE	(1) 1/4" CONCRETE SCREW	1 1/4"	2"

(1) CONCRETE SCREWS SHALL BE ELCO ULTRACONS (C.S.), ELCO CRETE-FLEX (S.S.), ITW RAMSET/RED HEAD TAPCONS (C.S. OR S.S.) OR HILTI KWIK-CON II (C.S OR S.S.).
(2) 2X_ BUCKS SHALL BE OF A MINIMUM DEPTH REQUIRED TO MEET ANCHOR EDGE DISTANCE REQUIREMENTS AND ALLOW NEAR FULL BEARING OF WINDOW FRAME.

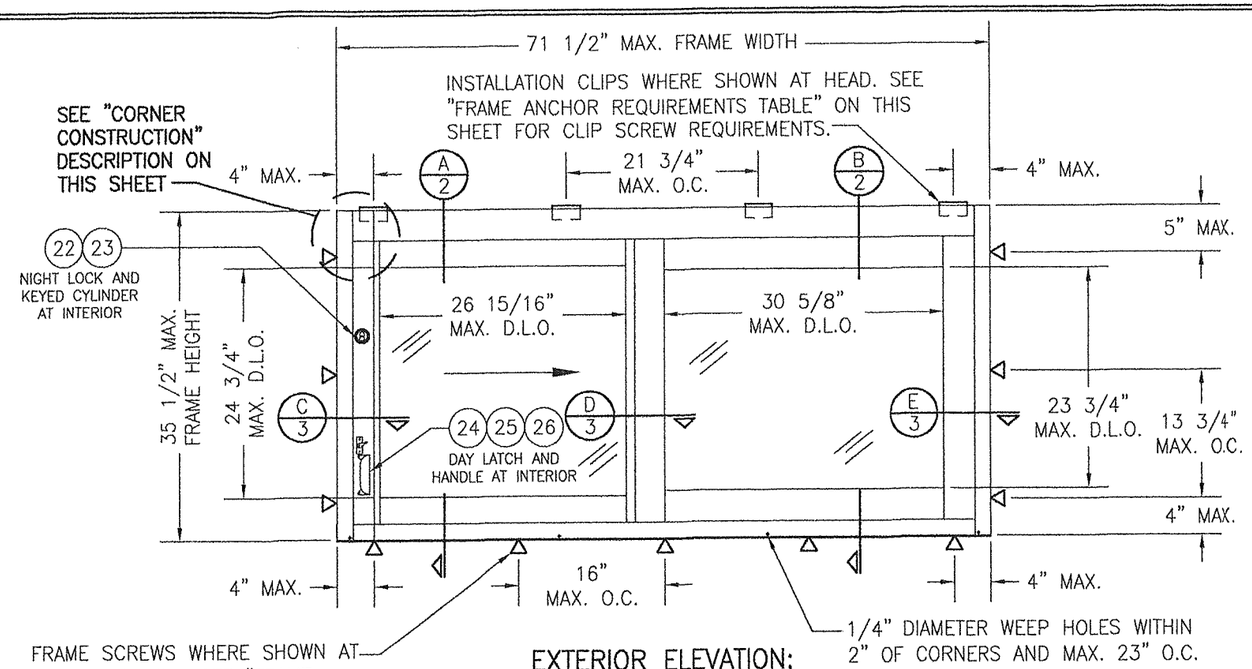

EXTERIOR ELEVATION:
SINGLE WINDOW IN STANDARD OPENING
SCALE: 3/4" = 1'-0"

PRODUCT REVISED
As complying with the Florida Building Code
NOA-No. 26-0624.05
Expiration Date: 07/21/2031
By: Manuel Perez
Miami-Dade Product Control

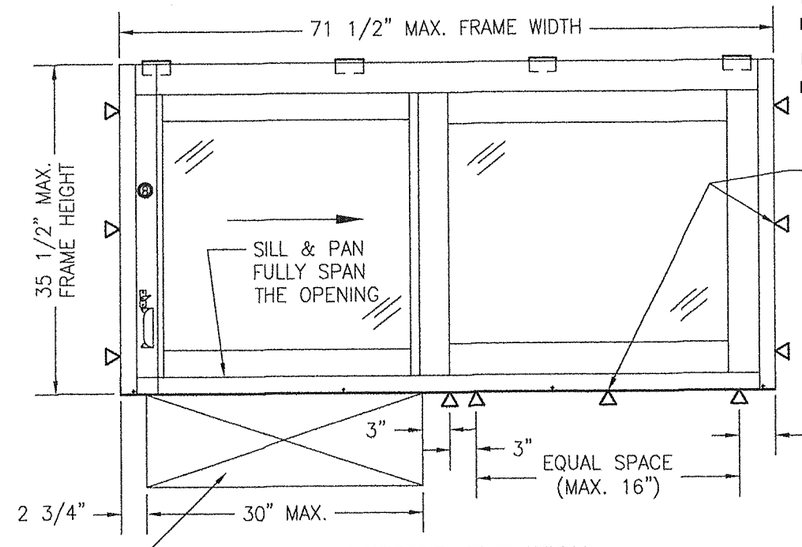

EXTERIOR ELEVATION:
SINGLE WINDOW WITH ACCESS DRAWER OPENING
SCALE: 3/4" = 1'-0"
(FOR ALL DETAIL NOT SHOWN OR SPECIFIED, SEE OTHER ELEVATION)

TYPICAL SPACE IN OPENING FOR INSTALLATION OF A TRANSACTION DRAWER (TRANSACTION DRAWER IS SUPPLIED BY OTHERS, IS NOT PART OF THIS APPROVAL, AND MUST BE INSTALLED WATER TIGHT TO THE OPENING AND WINDOW)

WARREN W. SCHAEFER LICENSE NO. 44135 STATE OF FLORIDA PROFESSIONAL ENGINEER

THESE DRAWINGS ARE APPLICABLE ONLY TO THE PRODUCT SPECIFIED. THEY MAY NOT BE USED FOR THE ASSEMBLY AND/OR INSTALLATION OF ANY OTHER PRODUCT NOR MAY THEY BE USED FOR RATIONAL AND/OR LOCAL APPROVAL OF ANY PRODUCT NOT PRODUCED BY THE MANUFACTURER STATED ON THESE DRAWINGS.

DRAWN BY: W.W.S.	CHECKED BY: W.W.S.
PLOT: 1=16	DATE: 12/15/15

NO.	REVISION DESCRIPTION	BY	DATE
A1	ADD TRANSACTION DRAWER OPTION	W.W.S.	07/31/18
B1	UPDATE BORDER INFO	W.W.S.	07/31/18

DRAWING TITLE
SERIES SV23185B HW ALUMINUM HORIZONTAL SLIDING BR WINDOW (LMI)

MANUFACTURER
DIEBOLD NIXDORF, INC.
818 MULBERRY ROAD SE
CANTON, OH 44707
330-489-4114

CONSULTANTS
W. W. SCHAEFER ENGINEERING & CONSULTING, P.A.
25601 AYSEN DRIVE
PUNTA GORDA, FL 33983

CERTIFICATION
JUN 08 2026
WARREN W. SCHAEFER, P.E.
P.E. NO. 44135

DRAWING NO. 1909 REV. B
SHEET NO. 1 OF 5

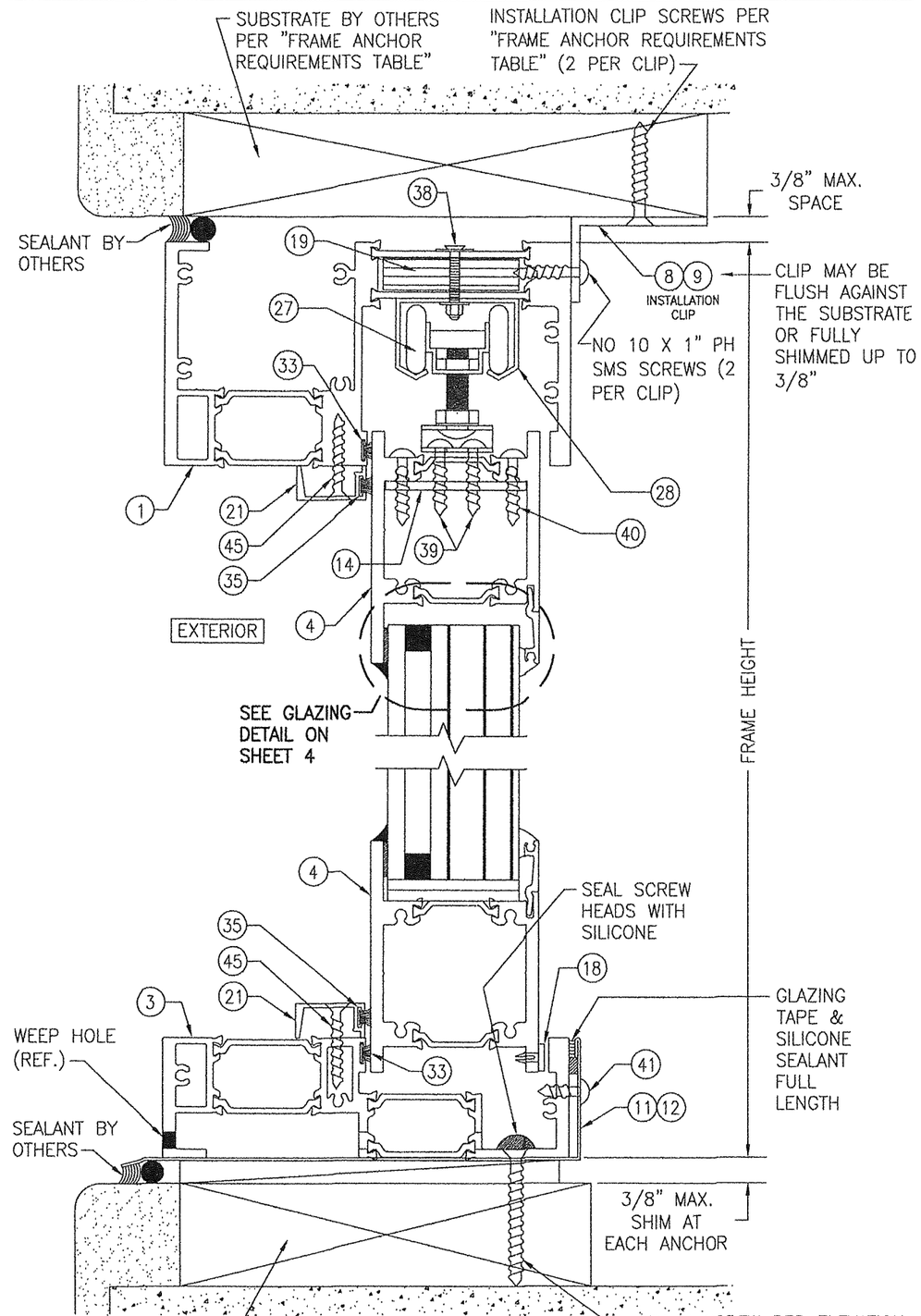

SECTION A/2
SCALE: 1/2 FULL

STANDARD OUTWARD CLIP AT HEAD IS SHOWN. FOR ALTERNATE INWARD CLIP POSITION, SEE ALTERNATE HEAD INSTALLATION DETAIL ON SHEET 3.

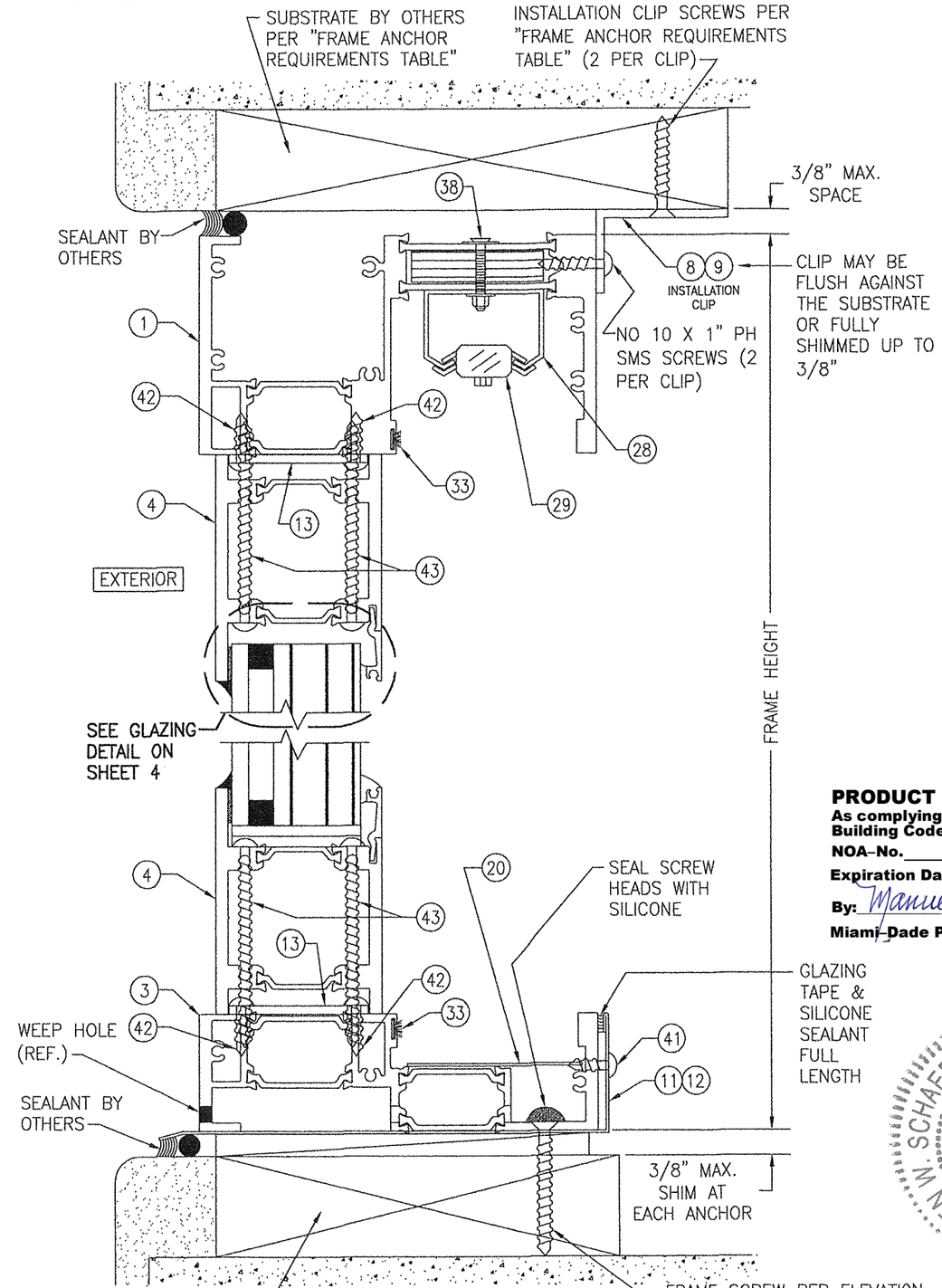

SECTION B/2
SCALE: 1/2 FULL

STANDARD OUTWARD CLIP AT HEAD IS SHOWN. FOR ALTERNATE INWARD CLIP POSITION, SEE ALTERNATE HEAD INSTALLATION DETAIL ON SHEET 3.

PRODUCT REVISED
As complying with the Florida Building Code
NOA-No. 26-0624.05
Expiration Date: 07/21/2031
By: Manuel Perez
Miami-Dade Product Control

WARREN W. SCHAEFER ★ LICENSE NO. 44135 ★ STATE OF FLORIDA ★ PROFESSIONAL ENGINEER

DRAWN BY: W.W.S.	CHECKED BY: W.W.S.
PLOT: 1=2	DATE: 12/15/15

NO.	REVISION DESCRIPTION	BY	DATE

DRAWING TITLE
SERIES SV23185B HW ALUMINUM HORIZONTAL SLIDING BR WINDOW (LMI)

MANUFACTURER
DIEBOLD NIXDORF, INC.
818 MULBERRY ROAD SE
CANTON, OH 44707
330-489-4114

CONSULTANTS
W. W. SCHAEFER ENGINEERING & CONSULTING, P.A.
25601 AYSEN DRIVE
PUNTA GORDA, FL 33983

CERTIFICATION
JUN 08 2026
WARREN W. SCHAEFER, P.E.
P.E. NO. 44135

DRAWING NO. 1909 REV. B

SHEET NO. 2 OF 5

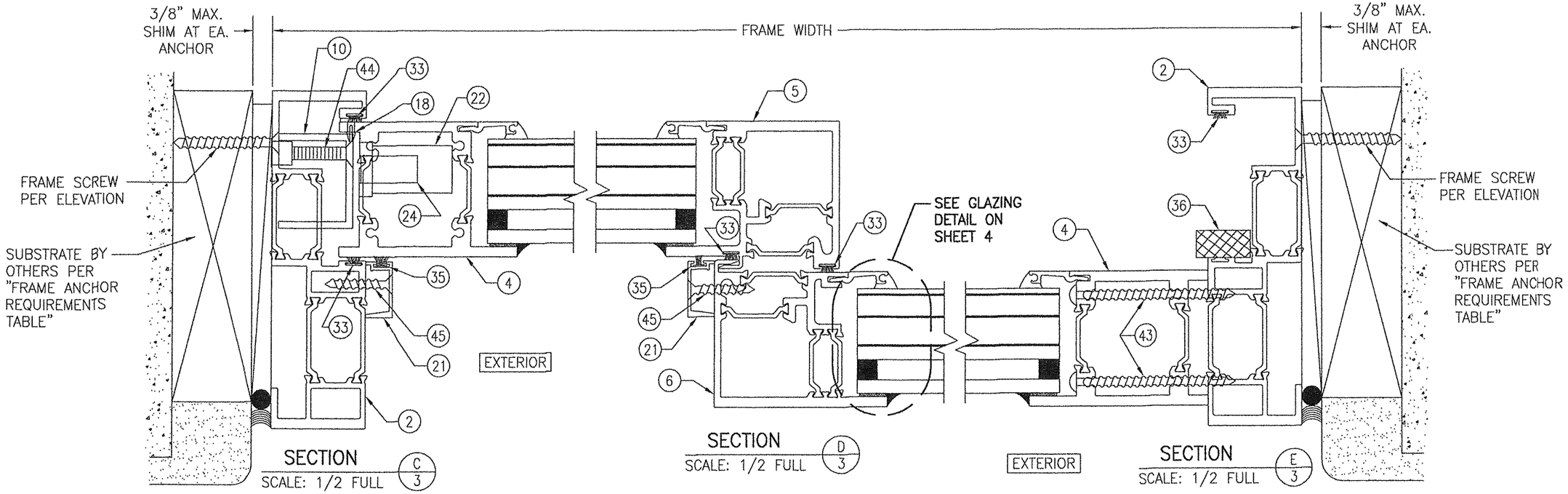

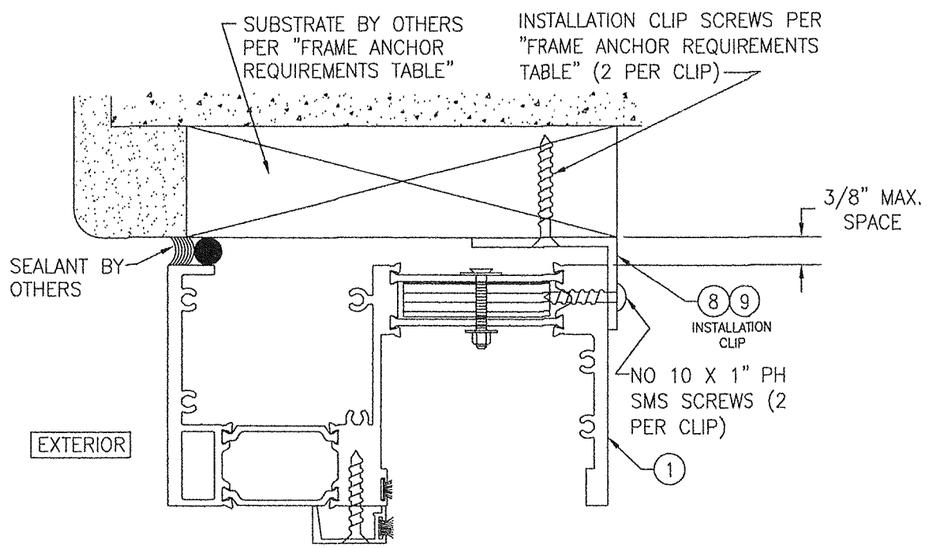

ALTERNATE HEAD INSTALLATION DETAIL

(CLIP FACING INWARD)

(FOR DETAIL NOT SHOWN, SEE SECTIONS A/2 & B/2)

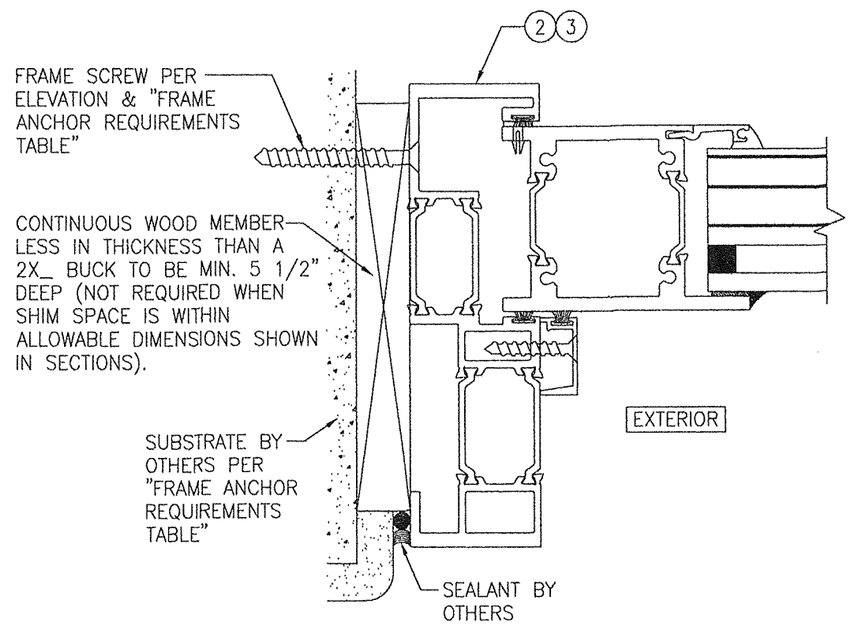

OPTIONAL DIRECT MOUNT DETAIL TO SUBSTRATE WITH SPACER

(SIDE SECTION SHOWN; SILL IS INSTALLED THE SAME)

(DIRECT MOUNT CONDITION IS NOT APPLICABLE AT HEAD)

(FOR DETAIL NOT SHOWN, SEE OTHER SECTIONS)

PRODUCT REVISED
As complying with the Florida Building Code
NOA-No. 26-0624.05
Expiration Date: 07/21/2031
By: Manuel Perez
Miami-Dade Product Control

WARREN W. SCHAEFER ★ ENGINEER ★ PROFESSIONAL ★ LICENSE NO. 44135 ★ STATE OF FLORIDA

DRAWN BY: W.W.S.	CHECKED BY: W.W.S.
PLOT: 1=2	DATE: 12/15/15

NO.	REVISION DESCRIPTION	BY	DATE

DRAWING TITLE
SERIES SV23185B HW ALUMINUM HORIZONTAL SLIDING BR WINDOW (LMI)

MANUFACTURER
DIEBOLD NIXDORF, INC.
818 MULBERRY ROAD SE
CANTON, OH 44707
330-489-4114

CONSULTANTS
W. W. SCHAEFER ENGINEERING & CONSULTING, P.A.
25601 AYSEN DRIVE
PUNTA GORDA, FL 33983

CERTIFICATION
JUN 08 2026
WARREN W. SCHAEFER, P.E.
P.E. NO. 44135

DRAWING NO. 1909 REV. B

SHEET NO. 3 OF 5

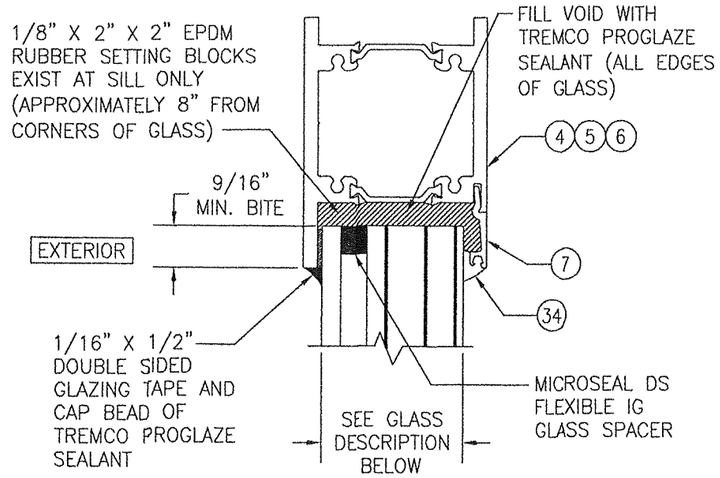

TYPICAL GLAZING DETAIL

GLASS DESCRIPTION:
1 15/16" OVERALL THICK I.G. LAMINATED GLASS (1/4" AN EXTERIOR; 3/8" SPACER; 1/4" AN/0.03 PVB/1/2" AN/0.03 PVB/3/8" AN/0.03 PVB/3/32" AN INTERIOR)
NOTE: PVB IS KURARAY BUTACITE PVB (PREVIOUSLY DUPONT)

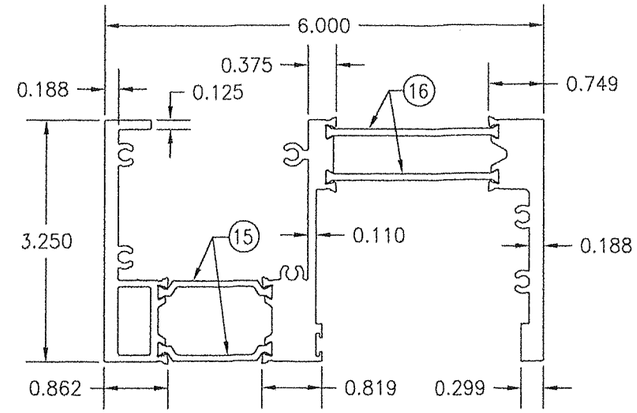

1 HEAD JAMB

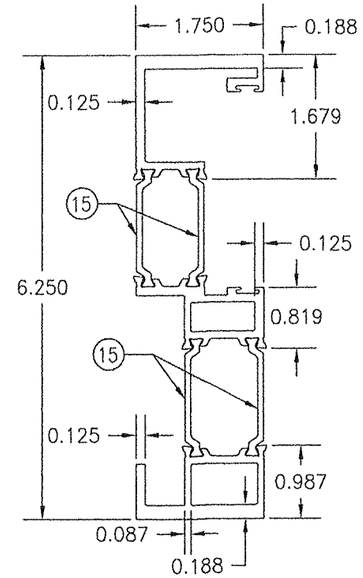

2 SIDE JAMB

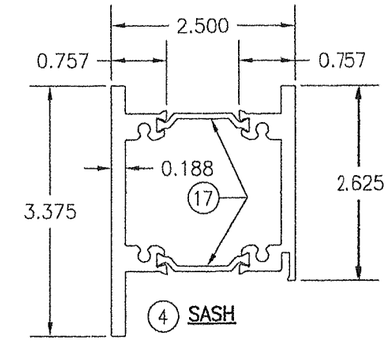

4 SASH

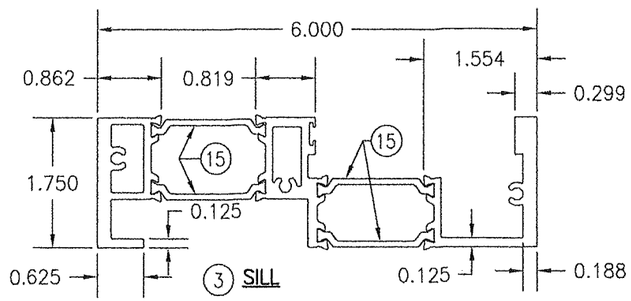

3 SILL

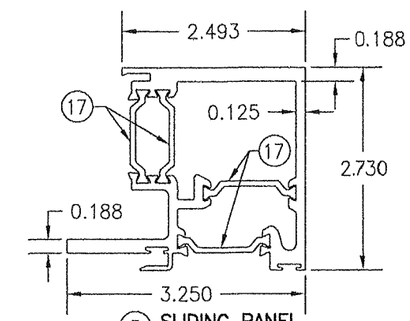

5 SLIDING PANEL INTERLOCK STILE

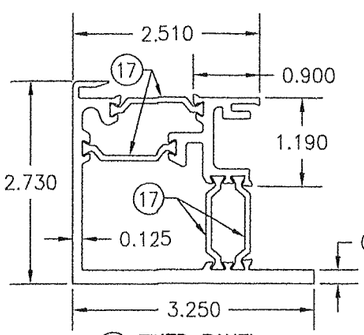

6 FIXED PANEL INTERLOCK STILE

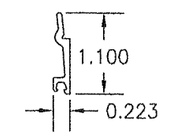

7 GLAZING BEAD

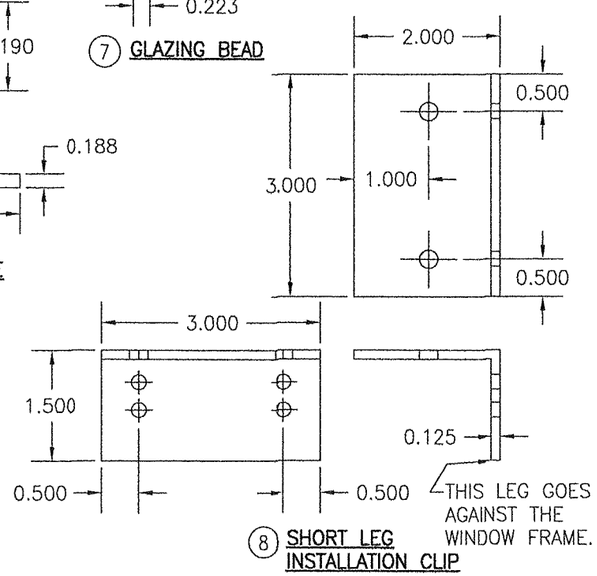

8 SHORT LEG INSTALLATION CLIP

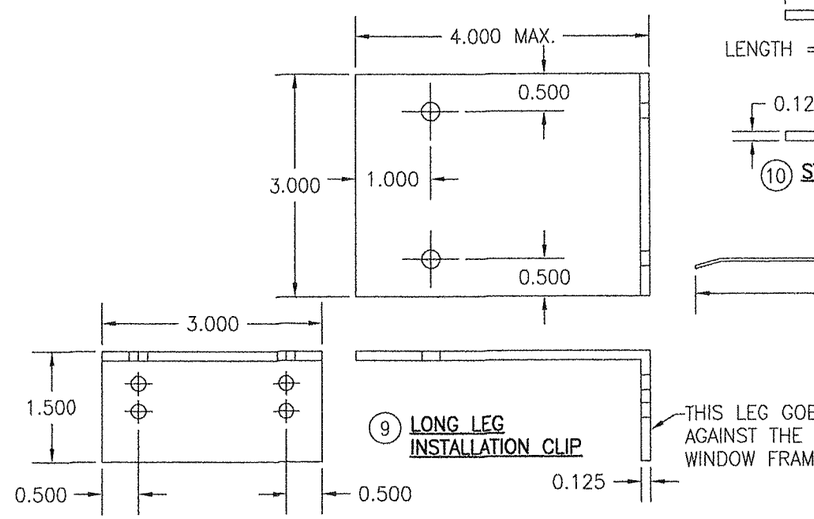

9 LONG LEG INSTALLATION CLIP

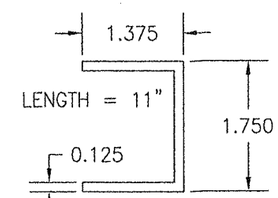

10 STRIKE CHANNEL

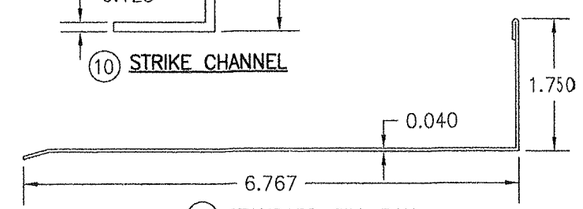

11 STANDARD SILL PAN

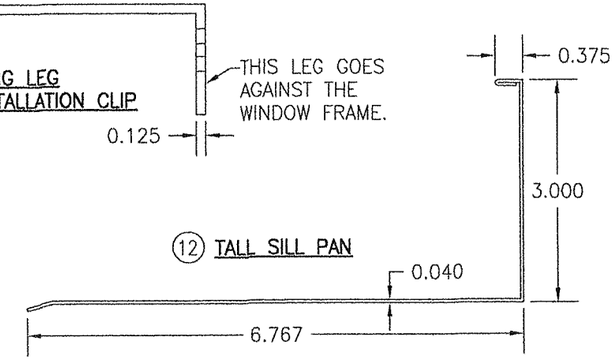

12 TALL SILL PAN

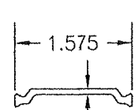

15 INSULBAR

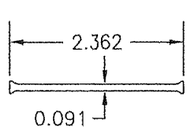

16 INSULBAR

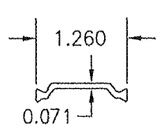

17 INSULBAR

PRODUCT REVISED
As complying with the Florida Building Code
NOA-No. 26-0624.05
Expiration Date: 07/21/2031
By: Manuel Perez
Miami-Dade Product Control

WARREN W. SCHAEFER ★ PROFESSIONAL ENGINEER ★ LICENSE NO. 44135 ★ STATE OF FLORIDA

DRAWN BY: W.W.S.	CHECKED BY: W.W.S.
PLOT: 1=2	DATE: 12/15/15

NO.	REVISION DESCRIPTION	BY	DATE

DRAWING TITLE
SERIES SV23185B HW ALUMINUM HORIZONTAL SLIDING BR WINDOW (LMI)

MANUFACTURER
DIEBOLD NIXDORF, INC.
818 MULBERRY ROAD SE
CANTON, OH 44707
330-489-4114

CONSULTANTS
W. W. SCHAEFER ENGINEERING & CONSULTING, P.A.
25601 AYSEN DRIVE
PUNTA GORDA, FL 33983

CERTIFICATION
JUN 0 8 2026
WARREN W. SCHAEFER, P.E.
P.E. NO. 44135

DRAWING NO. 1909
REV. B
SHEET NO. 4 OF 5

ITEM #	ITEM DESCRIPTION	MANUFACTURER/NOTES
	PARTS	
1	HEAD FRAME	6063-T6 ALUMINUM
2	SIDE JAMB	6063-T6 ALUMINUM
3	SILL	6063-T6 ALUMINUM
4	SASH	6063-T6 ALUMINUM
5	SLIDING PANEL INTERLOCK STILE	6063-T6 ALUMINUM
6	FIXED PANEL INTERLOCK STILE	6063-T6 ALUMINUM
7	GLAZING BEAD	6063-T6 ALUMINUM
8	SHORT LEG INSTALLATION CLIP	6063-T6 ALUMINUM
9	LONG LEG INSTALLATION CLIP	6063-T6 ALUMINUM
10	LOCK STRIKE CHANNEL	6063-T6 ALUMINUM
11	STANDARD SILL PAN	5005-H34Q ALUMINUM
12	TALL SILL PAN	5005-H34Q ALUMINUM
13	1/8" X 2" X 6" BACKER PLATE	6063-T6 ALUMINUM (CENTERED WITH EA. PAIR OF SCREWS)
14	1/8" X 2" X 6" BACKER PLATE	6063-T6 ALUMINUM (1 PER ROLLER)
15	INSULBAR	POLYAMIDE PA 66 GF25 I-STRUT BY TECHNOFORM
16	INSULBAR	POLYAMIDE PA 66 GF25 I-STRUT BY TECHNOFORM
17	INSULBAR	POLYAMIDE PA 66 GF25 I-STRUT BY TECHNOFORM
18	25/64" DIA. X 0.488" LONG DOOR GUIDES	PLASTIC
19	15/32" X 2" WIDE PLYWOOD REINFORCEMENT	FULL LENGTH OF INSULBARS
20	ALUMINUM SILL COVER	ANODIZED ALUMINUM
21	SASH STOP	6063-T6 ALUMINUM
	HARDWARE	
22	NIGHT LOCK	GLOBAL DOOR CONTROLS #TH1102
23	KEYED CYLINDER	LESS CORE BEST #B34362-C181-RP2-626
24	DAY LATCH & STRIKE	ADAMS RITE #MS1847-13-630 & MS4808 STRIKE
25	LEVER HANDLE	ADAMS RITE #1000-21-24-130
26	PULL HANDLE	AMEROCK #BP1592-G10 OR EQUAL
27	ROLLER (ONE PAIR PER SLIDING PANEL)	STANLEY #BP250N-41 (405305)
28	SLIDING DOOR TRACK	STANLEY #BP250N-01-72 (405104)
29	DOOR STOP	STANLEY BP250-77 (ZINK & RUBBER)
	SEALS & SEALANTS	
33	PILE WEATHERSTRIP	ULTRAFAB #W31175NG0000
34	DENSE EPDM RUBBER GLAZING GASKET	PITTCO #12-524 (DUROMETER = 70 +/-5)
35	PILE WEATHERSTRIP	TUBELITE #P1098A
36	1/2" X 1" X 1" FOAM WEEP HOLE BAFFLE	BY CITADEL
	FASTENERS	
38	NO. 10-24 X 1" MS WITH WASHER & LOCK NUT	WITHIN 7 1/2" OF ENDS AND MAX. 11 1/2" O.C.
39	NO. 10 X 1" PH SMS SCREWS	4 PER ROLLER
40	NO. 10 X 1" PH UNDERCUT SMS SCREWS	4 PER ROLLER BACKER PLATE
41	NO. 10 X 1/2" PH UNDERCUT SMS SCREWS	1 AT EACH END OF SILL PAN
42	NO. 10 X 3/4" PH UNDERCUT SMS SCREWS	4 PER BACKER PLATE
43	NO. 10 X 3" PH SMS SCREWS	6" FROM FIXED PANEL CORNERS (HEAD, SILL & SIDE)
44	1/4-20 X 1 1/2" FL HD MS & REV-NUT	3 PER STRIKE CHANNEL
45	NO. 8 X 1 1/4" OVAL HEAD SMS	3 PER SASH STOP (NEAR ENDS AND EQULLY SPACED)

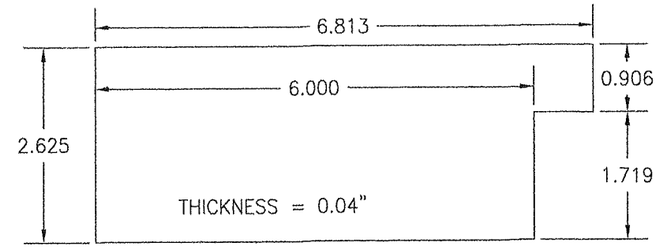

(20) ALUMINUM SILL COVER

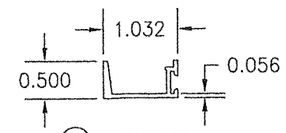

(21) SASH STOP

PRODUCT REVISED
As complying with the Florida Building Code
NOA-No. 26-0624.05
Expiration Date: 07/21/2031
By: Manuel Perez
Miami-Dade Product Control

WARREN W. SCHAEFER ★ LICENSE No. 44135 ★ STATE OF FLORIDA ★ PROFESSIONAL ENGINEER

DRAWN BY: W.W.S.	CHECKED BY: W.W.S.
PLOT: 1=2	DATE: 12/15/15

NO.	REVISION DESCRIPTION	BY	DATE

DRAWING TITLE
SERIES SV23185B HW ALUMINUM HORIZONTAL SLIDING BR WINDOW (LMI)

MANUFACTURER
DIEBOLD NIXDORF, INC.
818 MULBERRY ROAD SE
CANTON, OH 44707
330-489-4114

CONSULTANTS
W. W. SCHAEFER ENGINEERING & CONSULTING, P.A.
25601 AYSEN DRIVE
PUNTA GORDA, FL 33983

CERTIFICATION
JUN 0 8 2026
WARREN W. SCHAEFER, P.E.
P.E. NO. 44135

DRAWING NO. 1909 REV. B

SHEET NO. 5 OF 5