Miami-Dade County Department of Regulatory and Economic Resources
Staff Report to the Board of County Commissioners

PH: Z25-254 **November 19, 2026**
Item No. 8C4

Recommendation Summary	
Commission District	8
Applicant	288 ST LLC
Summary of Request	The applicant seeks to permit a rezoning from AU (Minimum 5-acre lot) to BU-1A (Limited Business District) which could allow the property to be developed with a variety of commercial uses.
Location	The southwest corner of SW 288 Street and SW 177 Avenue (Krome Avenue), Miami-Dade County, Florida.
Property Size	±10.15-gross (±8.70-net) Acres
Existing Zoning	AU, Agricultural District
Existing Land Use	Vacant land
2030-2040 CDMP Land Use Designation	Business and Office **(Subject to approval of the concurrent CDMP amendment Application No. CDMP20250020) *** (*see attached Zoning Recommendation Addendum*)
Comprehensive Plan Consistency	Consistent with interpretative text, goals, objectives and policies of the CDMP
Applicable Zoning Code Section(s)	Section 33-311 District Boundary Change (*see attached Zoning Recommendation Addendum*)
Recommendation	**Approval, subject to the Board's acceptance of the proffered covenant (Subject to approval of the concurrent CDMP amendment Application No. CDMP20250020 and it becoming effective) ***

*** This recommendation is contingent on approval of the CDMP amendment Application No. CDMP20250020 to amend the CDMP, which the Board of County Commissioners (the Board) scheduled to hear, pursuant to section 2-116.1 of the County Code, prior to and on the same day as the hearing on this concurrent zoning application**.

BOARD OF COUNTY COMMISSIONERS' JURISDICTION:

This Board has jurisdiction over this application pursuant to Section 2-116.1(5)(e), which provides that the zoning application shall, at the applicant's request, be processed concurrently with the CDMP amendment application, and the Board of County Commissioners may take action on the concurrent zoning application on the same day at which it takes final action on the CDMP amendment application.

REQUEST:

DISTRICT BOUNDARY CHANGE from AU, Agricultural District, to BU-1A, Limited Business District.

PROJECT HISTORY AND DESCRIPTION:

The applicant seeks to rezone the ± 8.70-net Acres (± 10.15-gross Acres) subject property from AU, Agricultural District, to BU-1A, Limited Business District in order to allow the site to be developed with a variety of commercial uses to service the recently approved residential developments in the area. In addition, the applicant has concurrently filed a small-scale amendment application (CDMP20250020) to the Comprehensive Development Master Plan (CDMP) Adopted 2030 and 2040 Land Use Plan (LUP) map. The CDMP application seeks to re-

designate the subject property from "Estate Density Residential" (1 to 2.5 dwelling units per gross acre) to "Business and Office". The CDMP amendment would be subject to the Board's acceptance of a proffered Declaration of Restrictions (CDMP covenant) requiring among other things that the commercial development on the property shall not exceed 122,000 square feet, and that no more than 60,000 square feet may be devoted to a supermarket. The declaration of restrictions also has provisions regarding environmental monitoring and restoration, vehicle trip cap limitations, overnight parking restrictions, allowance of agricultural use for so long as such bona fide agricultural use remains on the Property and the Property continues to meet the requirements for the agricultural exemption, road mitigation and connection to public water and sanitary sewer service. Approval of this zoning application is contingent on the outcome of the CDMP amendment. Staff notes that there were no plans submitted for the subject application. However, a zoning covenant is being voluntarily proffered by the applicant that, among other things, would restrict the subject site to the items mentioned within the CDMP covenant.

NEIGHBORHOOD CHARACTERISTICS		
	Zoning and Existing Use	**Land Use Designation**
Subject Property	AU; vacant parcel	Business and Office **(Subject to approval of the concurrent CDMP amendment) ***
North	AU; Lime grove	Agriculture
South	EU-S; Religious facility	Estate Density Residential (1 to 2.5 6 dua)
East	GU & AU, container nursery	Low Density Residential (2.5 to 6 dua)
West	AU, single-family residence	Transportation (Row, Rail, Metrorail, Etc.)
*** Land subject to CDMP Amendment Application No. CDMP20250020, filed concurrently by the applicant, which, if approved by the Board, would change the land use designation to "Business and Office".**		

NEIGHBORHOOD COMPATIBILITY:

The ± 8.70-net Acres (± 10.15-gross Acres) currently vacant subject property is located on the southwest corner of SW 288 Street and SW 177 Avenue (Krome Avenue). The area surrounding the subject parcel consists of properties zoned AU, EU-S and GU. The property to the north is zoned AU and is operating as a lime grove, the property to the west also zoned AU is developed with a single-family residence, the property to the south zoned EU-S is developed with a religious facility, and the properties to the east are zoned GU and AU and are comprised of container nurseries. Staff notes that the closest commercial property zoned BU-1A is approximately 4,673.44 ft. to the north and another property zoned BU-2 approximately 2.765.15 ft. to the south. Additionally, the development is located adjacent to the UDB line to the south and located on the corner of SW 288 Street which is a half section line and SW 177 Ave (Krome Avenue) which is a section line.

SUMMARY OF THE IMPACTS:

The approval of this application will allow the applicant to develop the site with a variety of commercial uses to service the recently approved residential developments in the area. Based on memoranda from the departments reviewing this application, the additional impacts will be minimal and will not cause their facilities and services to operate below their adopted levels of

service standards. The Platting and Traffic Review Section of the Department of Regulatory and Economic Resources (RER) state in their memorandum that the application meets traffic concurrency criteria, does not exceed the acceptable Level of Service (LOS) on the neighboring roadways and will generate approximately 414 PM daily peak hour vehicle trips. Staff notes that approval of this application may bring additional noise into the neighborhood and could have aural and visual impacts on the residential properties especially to the west and to the south of the subject site.

COMPREHENSIVE DEVELOPMENT MASTER PLAN ANALYSIS:

As previously mentioned, the subject property is the subject of a small-scale CDMP amendment application (CDMP20250020) being processed concurrently with this zoning application, pursuant to Section 2-116.1(5)(d)(e) of the Code of Miami-Dade County. The concurrent CDMP application is slated to be heard by the Board of County Commissioners, prior to the zoning hearing application. The CDMP application seeks to re-designate the subject parcel consisting of approximately ± 8.70-net Acres (± 10.15-gross Acres) from "Estate Density Residential" to "Business and Office". The **Business and Office** category *accommodates the full range of sales and service activities. Included are retail, wholesale, personal and professional services, call centers, commercial and professional offices.*

The purpose of the BU-1A, zoning district is to provide for retail and service convenience facilities which satisfy the essential and frequent needs of the adjacent residential neighborhood as well as the more specialized commercial facilities which may serve several neighborhoods. The BU-1A zoning district allows all uses permitted under the BU-1, Neighborhood Business, zoning district. Such uses under said commercial districts include, but are not limited to, office, retail stores and groceries, etc. The applicant's intent for the rezoning is to develop the site with a variety of commercial uses to service the recently approved residential developments in the area. As part of the small-scale CDMP amendment the applicant has voluntarily proffered a Declaration of Restrictions covering and running with the subject property requiring among other things that the commercial development on the property shall not exceed 122,000 sq. ft., and that no more than 60,000 sq. ft. may be devoted to a supermarket. The declaration of restrictions also has provisions regarding environmental monitoring and restoration, trip cap limitations, overnight parking restrictions, allowance of agricultural use for so long as such bona fide agricultural use remains on the Property and the Property continues to meet the requirements for the agricultural exemption, road mitigation and connection to public water and sanitary sewer service

The CDMP Land Use Element **Objective LU-4**, states that Miami-Dade County shall, by the year 2030, reduce the number of land uses, which are inconsistent with the uses designated on the LUP map and interpretive text, or with the character of the surrounding community. Staff opines that the proposed development would be consistent with CDMP policies that require the County to accommodate projected population or economic growth, and that development be prioritized on parcels that are compatible with abutting and nearby land uses. Staff opines that the proposed development under BU-1A zoning districts will not have a significant visual impact on the surrounding properties and would be **compatible** with the area based on the criteria set forth in the CDMP Land Use Element policies to appropriately increasing residential densities and intensities of development within the UDB. The rezoning of the property will act as a reasonable transition between the higher intensity projects located to the south that include, but are not limited to, residential developments.

Therefore, subject to the Board's approval of the CDMP small-scale amendment to allow the redesignation of the subject property to Business and Office, staff opines that the proposed

rezoning to BU-1A in order to develop the property as office would be **consistent** with the CDMP Land Use Element interpretative text for the Business and Office use. Staff further opines that approval of the application will not create any significant impacts which will disrupt or degrade the safety and tranquility of the neighboring properties and would be **compatible** with the surrounding area based on the Zoning Analysis below.

ZONING ANALYSIS:

The applicant seeks approval of a request for a district boundary change from AU, Agricultural District to BU-1A, Limited Business District. When the request to rezone the ± 8.70-net Acres (± 10.15-gross Acres) parcel to BU-1A is analyzed under Section 33-311, District Boundary Change staff opines that the request would be **compatible** with the surrounding area when considering the necessity and reasonableness in relation to the present and future development of the area concerned. Section 33-311 of the Code states that the purpose of the Code is to provide a comprehensive plan and design to among other things, lessen congestion on the highways and promote convenience and general welfare, with the view of giving reasonable consideration among other things to the character of the district or area and its peculiar suitability for particular uses. Staff supports the district boundary change and opines that for the reasons explained in the Comprehensive Development Master Plan Analysis section, the request for a zone change on the subject property in order to develop the site with a variety of commercial uses to service the existing and recently approved residential developments in the area, as allowed under the conditions and limitations contained within the CDMP covenant, would be **consistent** with the Business and Office designation of the parcel on the CDMP Land Use Plan map, and would be **compatible** with the existing and future residential developments in the area.

Staff find that the proposed BU-1A zoning change will facilitate a harmonious transition between existing and future residential development while allowing for a variety of commercial uses to serve the needs of existing and recently approved residential communities in the surrounding area. Staff could not find similar commercial approvals in the area. However, the applicant provides examples of residential developments that have been approved in the area that may benefit from the variety of commercial uses that BU-1A could allow. Such examples include residential development approved per resolution Z-26-24 (113 townhomes) located lying between SW 276th Street and SW 280th Street (Waldin Drive), and between SW 155th Avenue and SW 157th Avenue, which is approximately 1.78 miles from the subject site. Another example includes residential development that was approved under Resolution #Z-47-24 (500 residential dwelling units comprised of a combination of townhomes and multi-family apartments) located at 28030, 28200 and 28240 Harriet Tubman Highway and 15450 SW 280th Street, which is approximately 1.74 miles from the subject site. A third example includes residential development that was approved pursuant to Resolution #Z-32-25 (644 residential dwelling units) located Lying east of SW 177 (Krome) Avenue, between SW 272 Street & SW 278 Street, which is approximately 1.07 miles from the subject site. A final example includes residential development that was approved per resolution Z-15-25 (66 residential dwelling units) located Lying on the southeast corner of SW 154 Avenue and SW 278 Street, which is approximately 2.45 miles from the subject site.

It is important to mention that BU-1A zoning district allows a variety of commercial uses such as banks, dog and pet hospitals, grocery stores, health and exercise clubs, furniture stores, restaurants, supermarkets, variety stores, and others. In addition, BU-1A zoning district allows all the uses in the BU-1 zoning district, which include residential uses, antique stores, beauty parlors, bakeries, barber shops, drugstores, florist shops, hardware stores, museums, office buildings, optical stores, religious facilities, tobacco shops and others. Staff further note that under the proposed BU-1A zoning district the subject property could potentially be developed pursuant to

the Live Local Act at a maximum density of 250 dwelling units per acre and with additional height. However, as part of this application, the applicant has proffered a covenant that, among other things, requires that the commercial development on the property shall not exceed 122,000 square feet, and that no more than 60,000 square feet may be devoted to a supermarket. The declaration of restrictions also has provisions regarding environmental monitoring and restoration, vehicle trip cap limitations, overnight parking restrictions, allowance of agricultural use for so long as such bona fide agricultural use remains on the subject property and that the property continues to meet the requirements for the agricultural exemption, road mitigation and connection to public water and sanitary sewer service.

Staff notes that although no site plans were submitted for this application, at the time of permitting the property would have to comply with the BU-1A zoning district requirements, which require the development to be compatible with the adjacent uses through the implementation of adequate buffering, site planning, setbacks and/or design features.

Staff notes that based on the memoranda submitted by other departments reviewing the application, approval of the application will not cause their facilities and services to operate below their adopted levels of service standards. Staff notes that the Platting and Traffic Review Section of the Department of Regulatory and Economic Resources (RER), does not object to the application and indicate in their memorandum, that the application meets the traffic concurrency criteria and it will generate approximately 414 PM peak hour vehicle trips. Further, the Departments of RER and Environmental Resources Management (DERM), in their memorandum, indicate that they don't have objections to the application for an initial development order as specified in the adopted CDMP for potable water service, wastewater disposal, and flood protection. In addition, the memoranda submitted by the Miami-Dade Fire Rescue Department and the Water and Sewer Department indicate no objection to the application as well. Based on the aforementioned department memoranda, staff opines that approval of the applicant's request for a proposed rezoning of the parcel will not unduly burden the abutting roadways, will not have an unfavorable impact on the environmental resources of the County, or cause undue or excessive burden on public facilities. As such, staff opines that approval of the request to rezone the subject parcel to BU-1A, subject to the proffered covenant, would be **compatible** with the surrounding neighborhood, when considering the necessity and reasonableness of the rezoning in relation to the present and future development of the area. **Therefore, staff recommends approval of the request for a district boundary change to BU-1A, Limited Business District, under Section 33-311, District Boundary Change, subject to the Board's acceptance of the proffered covenant. (Subject to approval of the concurrent CDMP amendment Application No. CDMP20250020 and it becoming effective)**

ACCESS, CIRCULATION AND PARKING: N/A

NEIGHBORHOOD SERVICES PROVIDER REVIEW: See attached.

RECOMMENDATION:

Approval, subject to the Board's acceptance of the proffered covenant (Subject to approval of the concurrent CDMP amendment Application No. CDMP20250020 and it becoming effective).

CONDITIONS FOR APPROVAL: None.

ES:JB:SS:PM

Eric Silva

Eric Silva, AICP, Assistant Director
Development Services Division
Miami-Dade County Department of
Regulatory and Economic Resources

ZONING RECOMMENDATION ADDENDUM

288 ST LLC
PH: Z25-254

NEIGHBORHOOD SERVICES PROVIDER COMMENTS*	
Departments of RER and Environmental Resources Management (DERM)	*No objection*
Platting and Traffic Review Section (RER)	*No objection*
Miami-Dade Fire Rescue (MDFR)	*No objection*
Water and Sewer Department (WASD)	*No objection*
Building and Neighborhood Compliance (BNC)	*No objection*
**Subject to conditions in their memorandum.*	

COMPREHENSIVE DEVELOPMENT MASTER PLAN (CDMP) OBJECTIVES, POLICIES AND INTERPRETATIVE TEXT

Business and Office (Pg. I-40)	*This category accommodates the full range of sales and service activities. Included are retail, wholesale, personal and professional services, call centers, commercial and professional offices, hotels, motels, hospitals, medical buildings, nursing homes (also allowed in the institutional category), entertainment and cultural facilities, amusements and commercial recreation establishments such as private commercial marinas. Also allowed are telecommunication facilities (earth stations for satellite communication carriers, satellite terminal stations, communications telemetry facilities and satellite tracking stations). These uses may occur in self-contained centers, high-rise structures, campus parks, municipal central business districts or strips along highways. In reviewing zoning requests or site plans, the specific intensity and range of uses, and dimensions, configuration and design considered to be appropriate will depend on locational factors, particularly compatibility with both adjacent and adjoining uses, and availability of highway capacity, ease of access and availability of other public services and facilities. Uses should be limited when necessary to protect both adjacent and adjoining residential use from such impacts as noise or traffic, and in most wellfield protection areas uses are prohibited that involved the use, handling, storage, generation or disposal of hazardous material or waste, and may have limitations as to the maximum buildable area, as defined in Chapter 24 of the County Code. When the land development regulations are amended pursuant to Land Use Element Policies LU-9P and LU-9Q, live-work and work-live developments shall be permitted on land designated as Business and Office, as transitional uses between commercial and residential areas.* ***(*Subject to approval of the concurrent CDMP amendment Application No. CDMP20250020)***
Uses and Zoning Not Specifically Depicted (Pg. I-33)	*Existing lawful residential and non-residential uses and zoning are not specifically depicted on the LUP map. They are however reflected in the average Plan density depicted. All such lawful uses and zoning are deemed to be consistent with this Plan as provided in the section of this chapter titled "Concepts and Limitations of the Land Use Plan map." The limitations referenced in this paragraph pertain to existing zoning and uses. All approval of new zoning must be consistent with the provisions of the specific category in which the parcel exists, including all the provisions for density averaging and definition of gross density.*
Policy LU-4A (Page I-9)	*When evaluating compatibility among proximate land uses, the County shall consider such factors as noise, lighting, shadows, glare, vibration, odor, runoff, access, traffic, parking, height, bulk, scale of architectural elements, landscaping, hours of operation, buffering, and safety, as applicable.*
Policy LU-4D (Page. I-8)	*Uses which are supportive but potentially incompatible shall be permitted on sites within functional neighborhoods, communities or districts only where proper design solutions can and will be used to integrate the complementary elements and buffer any potentially incompatible elements.*

ZONING RECOMMENDATION ADDENDUM

288 ST LLC
PH: Z25-254

PERTINENT ZONING REQUIREMENTS/STANDARDS

Section 33-311 District Boundary Change	(A) *The Community Zoning Appeals Boards are advised that the purpose of zoning and regulations is to provide a comprehensive plan and design to lessen the congestion in the highways; to secure safety from fire, panic and other dangers, to promote health, safety, morals, convenience and the general welfare; to provide adequate light and air; to prevent the overcrowding of land and water; to avoid undue concentration of population; to facilitate the adequate provisions of transportation, water, sewerage, schools, parks and other public requirements, with the view of giving reasonable consideration among other things to the character of the district or area and its peculiar suitability for particular uses and with a view to conserving the value of buildings and property and encouraging the most appropriate use of land and water throughout the County.* *(F)* ***Section 33-311*** *provides that the Board shall take into consideration, among other factors the extent to which:* *(1) The development permitted by the application, if granted, conforms to the Comprehensive Development Master Plan for Miami-Dade County, Florida; is consistent with applicable area or neighborhood studies or plans, and would serve a public benefit warranting the granting of the application at the time it is considered;* *(2) The development permitted by the application, if granted, will have a favorable or unfavorable impact on the environmental and natural resources of Miami-Dade County, including consideration of the means and estimated cost necessary to minimize the adverse impacts; the extent to which alternatives to alleviate adverse impacts may have a substantial impact on the natural and human environment; and whether any irreversible or irretrievable commitment of natural resources will occur as a result of the proposed development;* *(3) The development permitted by the application, if granted, will have a favorable or unfavorable impact on the economy of Miami-Dade County, Florida;* *(4) The development permitted by the application, if granted, will efficiently use or unduly burden water, sewer, solid waste disposal, recreation, education or other necessary public facilities which have been constructed or planned and budgeted for construction;* *(5) The development permitted by the application, if granted, will efficiently use or unduly burden or affect public transportation facilities, including mass transit, roads, streets and highways which have been constructed or planned and budgeted for construction, and if the development is or will be accessible by public or private roads, streets or highways.*

Consumer and Neighborhood Protection

ENFORCEMENT HISTORY

288 ST LLC	N/A MIAMI-DADE COUNTY, FLORIDA
APPLICANT	**ADDRESS**
Pending	Z2025000254
DATE	**HEARING NUMBER**

FOLIO:
30-7801-000-0610

REVIEW DATE OF CURRENT ENFORCEMENT HISTORY:
October 23, 2026

NEIGHBORHOOD REGULATIONS:
There are no open cases.

BUILDING SUPPORT REGULATIONS:
There are no open cases.

OUTSTANDING LIENS AND FINES:
There are no outstanding liens or fines.

Memorandum

Date: November 5, 2026

To: Lourdes M. Gomez, AICP, Director
Department of Regulatory and Economic Resources (RER)

From: Ninfa Rincon, Chief Code Coordination - RER

Subject: Z2025000254-3rd Review
288 St LLC
Southeast corner of SW 288th Street and SW 177th Avenue (North Krome Avenue)
DBC from AU to BU-1A for commercial development.
(AU) (9.142 acres)
01-57-38

The Departments of RER and Environmental Resources Management (DERM) are currently reviewing concurrent application No. CDMP20250020. If the CDMP application is denied, then RER recommends that this concurrent zoning application be denied, as it would be inconsistent with the unamended CDMP. Accordingly, RER's analysis and recommendations consider whether this concurrent zoning application is consistent with the CDMP amendment as requested by the applicant and with the applicable zoning and other land development regulations.

Finally, if the Board adopts the CDMP application but with modifications, the recommendations and analyses provided in this report may have to be supplemented or revised to address any such modifications.

Miami-Dade County has performed an environmental review of the above referenced zoning application for compliance with the requirements of Chapter 24 of the Miami-Dade County Code (the Code) for potable water service and wastewater disposal. Based on the information provided, this zoning application is approved pursuant to section 24-43.1 of the Code related to potable water service and wastewater disposal contingent upon the CDMP application CDMP20250020 being approved and remaining in effect.

Potable Water Supply and Wastewater Disposal

Based on the information submitted, the requested district boundary change from AU to BU-1A does not include a site plan or propose any development at this time however will allow the future development of non-residential uses. Public water and public sanitary sewers are not currently abutting the subject property.

In accordance with the Code, RER will evaluate the feasibility of connecting to the public water supply system and public sanitary sewer system prior to RER approval of any future development order (zoning site plan, plat, building permit) that proposes development on the subject property. **This review shall not be interpreted as a written approval from RER regarding the use of onsite potable water supply and/or onsite sewage treatment and disposal system (OSTDS) for future development.**

Section 24-43.1(4) states no County office, agent, employee, or Board shall approve, grant, or issue any building permit, certificate of use and occupancy, platting action or zoning action for any nonresidential land use served or to be served by any source of potable water supply and an OSTDS without the prior written approval of the Director. The same Code section further requires that the Director shall only issue written approval if it is demonstrated that the only liquid waste that shall be generated, disposed of, discharged, or stored on the property shall be domestic sewage discharged into an OSTDS that complies with section 24-42.7 of the Code.

Section 24-43.1(6) of the Code states no County or municipal officer, agent, employee, or Board shall approve, grant or issue any building permit, certificate of use and occupancy, municipal occupational license, platting action (final plat, waiver of plat or equivalent municipal platting action) or zoning action (district boundary change, unusual use, use variance or equivalent municipal zoning action) for any nonresidential land use served or to be served by any liquid waste storage, disposal or treatment method other than utility sanitary sewers or any source of potable water supply other than a utility water main without obtaining the prior written approval of the Director.

This analysis is based on sanitary sewer infrastructure as it exists at the time of this application. Please be advised that sanitary sewer system infrastructure is constantly changing, and future applications related to this property will be reanalyzed based on the infrastructure that exists at the time of such future applications.

Conditions of Approval: None

Water Control Review

Any development/ redevelopment involving 2 acres or more of impervious area (of contiguous properties under the same ownership) shall require a RER Surface Water Management General Permit for the construction and operation of any required surface water management system. This permit shall be obtained prior to any future development order approval.

For compliance with Miami-Dade County stormwater disposal requirements, stormwater shall be retained on-site utilizing a properly designed seepage or infiltration drainage system. Drainage plans shall provide for full on-site retention of the stormwater runoff generated by the applicable storm event pursuant to the Code. Any grading and drainage improvements within the parcels will require review and approval by RER. Any public road drainage systems shall provide service that complies with the minimum requirements outlined in the Miami-Dade County Public Works Manual.

Site grading and development plans shall comply with the requirements of Chapter 11C of the Code, as well as with all state and federal criteria, and shall not cause flooding of adjacent properties.

Any proposed development shall comply with county and federal flood criteria requirements. The proposed development order, if approved, will not result in a reduction in the LOS standards for flood protection set forth in the CDMP subject to compliance with the conditions required for this proposed development order.

Pursuant to section 24-48.1(1)(f) of the Code, the applicant is advised that a Class VI Permit shall be required for the construction of the proposed surface water management system.

The applicant is advised to contact the RER Water Control Section at (305)372-6681 or dermwatercontrol@miamidade.gov for further information regarding permitting procedures and requirements.

Conditions of Approval: None

Pollution Remediation

A preliminary review of the information available to the Department, including potential sources such as current or former agricultural use, indicates the potential for environmental concerns at the subject property due to historical and/or current land use on the subject or adjoining properties. Therefore, the applicant is required to evaluate and identify all site activities and land uses (historical and current) associated with the proposed development that could have caused, or may have the potential to cause, environmental impacts to soil, groundwater, surface water, or vapor at, near, or in the vicinity of the site. Based on the findings, the appropriate environmental site assessment may be required in support of the site development. A report presenting the results and findings of the required site investigation(s), along with all assessments and supporting documentation, shall be submitted to the RER-Pollution Remediation Section (PRS), RER-Environmental Monitoring and Evaluation Section (EMES), and/or DERM-Environmental Monitoring and Restoration Division (EMRD) for review prior to the submittal of site development plans, including but not limited to soil improvement plans, drainage/stormwater management plans, and dewatering plans. Review and approval by PRS, EMES, and/or EMRD shall be required.

All construction plans (inclusive of drainage) and dewatering plans shall receive approval from the PRS, EMES, and/or EMRD as they relate to environmental contamination issues. Be advised that PRS, EMES, and EMRD review of this application does not constitute approval of any site plans, drainage/stormwater plans, or development plans associated with this application.

For properties classified as agricultural by the Miami-Dade County Property Appraiser, certain DERM activities may be preempted to the Florida Department of Environmental Protection. Such matters will be reviewed on a case-by-case basis to ensure compliance with applicable state law.

Any contaminated portion of the site that is proposed to be sold, transferred or dedicated (including, but not limited to, for public right-of-way) to any public entity shall be identified on the tentative and final development plans. All contaminated soil, groundwater, surface water, solid waste, and/or methane, as applicable, within the property to be conveyed must be disclosed at the earliest stage possible and the receiving public entity must be informed of, and accept, the contaminated property and any associated restrictions. If soil, groundwater, surface water, solid waste, and/or methane contamination, as applicable, will remain following the conveyance, documentation of acceptance shall be provided to the Department prior to Final Plat. Please contact Caroline Irvin at Caroline.Irvin@miamidade.gov if you have any questions.

Conditions of Approval: None

Tree Preservation Review

An aerial review of the subject property indicates the presence of tree resources. The subject application was reviewed to determine whether the proposed request is in accordance with the specimen tree

protection standards contained in section 24-49.2 of the Code; however, no information regarding these tree resources was submitted with this application.

A Miami-Dade County Tree Removal Permit is required prior to the removal or relocation of any tree that is subject to the tree preservation and protection provisions of the Code. Projects and permits shall comply with the requirements of sections 24-49.2 and 24-49.4 of the Code, including the specimen tree standards. The applicant is advised that a tree survey that includes a tree disposition table will be required during the tree removal permit application process.

The subject application, which requests a district boundary change from AU to BU-1A could result in tree removal/relocation activity to trees. Because the subject application does not include a proposed site plan, it cannot be determined at this time whether the applicant's future plans for the properties, which are yet to be submitted, would comply with specimen tree standards. **RER approval of the district boundary change shall not be interpreted as RER approval of removal or relocation of tree resources.**

The applicant may contact the Tree and Forest Resources Section at (305) 372-6574 or via email at TFRS@miamidade.gov for additional information regarding tree permitting procedures and requirements.

Pursuant to Policy CON-8I of the CDMP and the prohibited plant species eradication requirements contained in in accordance with section 24-49.9 of the code, if exotic pest plants and/or nuisance species exist on the site they shall be removed prior to development or redevelopment, and developed parcels shall be maintained to prevent the growth or accumulation of prohibited species.

Moreover, pursuant to section 18A-12 of the Code and the latest version of the Miami-Dade County Landscape Manual, controlled species shall not be planted within five hundred (500) feet of native plant communities or any remnant native habitat. Please contact Kelly Feeney at Kelly.Feeney@miamidade.gov for additional information or concerns regarding this review.

Conditions of Approval: None

Endangered Species Review

CDMP policy CON-9B states that *"nesting, roosting and feeding habitats used by federal or State designated endangered or threatened species, shall be protected and buffered from surrounding development or activities and further degradation or destruction of such habitat shall not be authorized".*

The subject property is located within the USFWS consultation area for the federally endangered Florida bonneted bat (*Eumops floridanus*), which may utilize the subject property for foraging, nesting, and roosting. The Miami-Dade County population of the Florida bonneted bat is largely urban and known to forage and socialize over dark, open spaces adjacent to natural areas such as open water, forested areas, wetlands, and areas with significant tree resources.

In addition, the Owners are advised to implement wildlife best management practices to minimize the impacts from development to listed species.

Please be advised that prior to any future development at the subject property, it is recommended that the applicant consult with the USFWS in the Vero Beach office at (352) 448-9151.

Please contact Kelly Feeney at Kelly.Feeney@miamidade.gov for additional information or concerns regarding this review.

Conditions of Approval: None

DERM Enforcement History Review

The subject property has no open and one (1) closed enforcement records for violations of Chapter 24 of the Code. Please contact the Enforcement Section if you require additional information. There are no outstanding DERM liens or fines for the subject property.

Concurrency Review Summary

A concurrency review has been conducted for this application and the County has determined that the same meets all applicable LOS standards for an initial development order as specified in the adopted CDMP for potable water supply, wastewater disposal, and flood protection. This concurrency approval is valid only for this initial development order. Pursuant to Chapter 33G of the Code, a final concurrency statement will be issued at the time of final development order.

If you have any questions concerning the comments or wish to discuss this matter further, please contact Ninfa Rincon at (305) 372-6764.

cc: Eric Silva, Department of Regulatory and Economic Resources

Memorandum

Date: October 28, 2026

To: Eric Silva, AICP, Assistant Director
Development Services Division
Department of Regulatory and Economic Resources (RER)

Through: James B. Ferguson, P.E.
Assistant Director
Water and Sewer Department (WASD)

From: Maria A. Valdes, CSM, LEED® Green Associate
Chief, Planning & Water Certification Section
Water and Sewer Department (WASD)

Subject: Zoning Application Comments - 288 ST LLC
UPDATED - Application No. Z2025000254 - (Pre-App. No. Z25P-225)

The Water and Sewer Department has reviewed the proposed development for the subject zoning application. WASD has no objection to this zoning application, based on the information provided. Additional requirements may be needed at the time of permitting. The information provided below is preliminary and it does not affect the zoning process.

At the time of development, the applicant is advised to consult with the project's engineer and WASD's Plans Review staff to finalize points of connection and capacity approval. A WASD Agreement and/or a Verification Form will be required.

Application Name: 288 ST LLC

Location: The proposed project is located at the southwest corner of the intersection of SW 177th Avenue and SW 288th Street with Folio No. 30-7801-000-0610, in unincorporated Miami-Dade County.

Due to the project's proximity to the UDB, the proposed development is subject to review and approval by a WASD proximity to the UDB project review team, as required by Policy WS-2E in the County's CDMP.

Proposed Development: The applicant is seeking approval for a District boundary change from AU (Agricultural) to BU-1A (Business Districts Limited) to facilitate the future development of a commercial center. A site plan was not submitted with this application; therefore, the total water/sewer demand cannot be calculated at this time. The subject project has a concurrent CMDP application No. CDMP20250020 and seeks to modify the subject property's land use designation on the Land Use Plan map from "Estate Density Residential" to "Business and Office".

Water: The proposed development is located within the WASD's water service area. The water supply will be provided by the South Dade Water System. Currently, there is adequate treatment and water supply capacity, consistent with Policy WS-2 A (1) of the CDMP.

As required by WASD's Rules and Regulations, since this development is a commercial development connecting to the water infrastructure for the first time, a water main extension along one entire boundary of the property will be required and must be connected to a minimum 12-inch water main.

Please note that there is a WASD Agreement No. 32470 at the northeast corner of the intersection of SW 177th Avenue and SW 288th Street that will bring a 16-inch water main along SW 177th Avenue to SW 288th Street. The infrastructure for said Agreement has been constructed and is pending to be conveyed. If Agreement No. 32470 is conveyed by the time this project is ready for construction, the developer may connect to the proposed 16-inch water main in SW 177th Avenue and SW 288th Street and extend a 16-inch water main heading westerly along SW 288th Street to the northwest corner of the proposed development to provide service to the proposed development.

Any public water main extension within the property shall be 12-inch minimum diameter. If two or more fire hydrants are to be connected to a public water main extension within the property, then the water system shall be looped with two (2) points of connection. *Final points of connections and capacity approval to connect to the water system will be provided at the time the water hydraulic modeling analysis is performed, and the WASD Agreement is offered.*

Note to the Developer:

1. The Developer of this project shall coordinate and cooperate on water and sewer interconnections, construction sequence, and schedule with other development projects that are in the vicinity either downstream or upstream with regard to obtaining approval and permits from WASD and other regulatory governmental agencies to avoid conflict with utility plans.

2. If a vicinity development has a water and/or sewer construction permit but has not started construction and another developer would like to take over the other development scope of water and/or sewer work, then the developers shall coordinate to withdraw the existing permit prior to the other developer submitting plans to WASD and other regulatory governmental agencies for review.

A Water Supply Certification (WSC) will be required for the proposed development. Said Certification will be issued at the time the applicant requests connection to the water system. The WSC letter shall remain active in accordance with terms and conditions specified in said certification. The WSC required is consistent with Policy CIE-5D and WS-2C in the County's CDMP and in accordance with the permitted withdrawal capacity in the WASD's 20-year Water Use Permit.

For more information on the Water Supply Certification Program please go to: http://www.miamidade.gov/water/water-supply-certification.asp

In addition, all future development will be required to comply with water use efficiency techniques for indoor water use and with landscape standards in accordance with Sections 8-31, 32-84, 18-A, and 18-B of the Miami-Dade County Code, consistent with Policies WS-5E and WS-5F of the CDMP.

For more information about our Water Conservation Program, please go to: http://www.miamidade.gov/conservation/home.asp

For information concerning the Water-Use Efficiency Standards Manual please go to: http://www.miamidade.gov/waterconservation/library/instructions/water-use-efficiency-standards-manual.pdf

Sewer: The proposed development is located within the WASD's sewer service area. The wastewater flows for the proposed development will be transmitted to the South District Wastewater Treatment Plant (SDWWTP) for treatment and disposal. The SDWWTP is currently operating under a permit from the

Florida Department of Environmental Protection. Currently, there is adequate sewer treatment and disposal capacity at the SDWWTP, consistent with Policy WS-2 A (2) of the CDMP.

Please note that a new Public Pump Station (P.S.) has been constructed and is pending to be conveyed with a nearby WASD Agreement No. 31806, that will bring a gravity sewer system to the area. In addition, there is a WASD Agreement No. 32470 (constructed pending to be conveyed) south of Agreement No. 31806 that will connect to the future gravity sewer of Agreement No. 31806 (pending to be conveyed) that is proposing a gravity sewer just east of the intersection of SW 177th Avenue and SW 288th Street. If Agreement No. 31806 and Agreement No. 32470 are conveyed by the time this project is ready for construction, the developer may connect to a proposed gravity sewer system just east of the intersection of SW 177th Avenue and SW 288th Street and extend a minimum 8-inch gravity sewer to the subject property to cover one entire boundary of the site, as required by WASD's Rules and Regulations.

If unity of title does not apply, thence any gravity sewer within the property shall be public and 8-inch minimum diameter. *Final points of connection and capacity approval to connect to the sewer system will be provided at the time the sewer hydraulic modeling analysis is performed, and the WASD Agreement is offered.* If WASD Agreement No. 31806 and Agreement No. 32470 are not conveyed by the time this project is ready for construction, the Developer shall contact WASD to obtain a new point of connection.

Note to the Developer:

1. The Developer of this project shall coordinate and cooperate on water and sewer interconnections, construction sequence, and schedule with other development projects that are in the vicinity either downstream or upstream with regards to obtaining approval and permits from WASD and other regulatory governmental agencies to avoid conflict with utility plans.
2. If a vicinity development has a water and/or sewer construction permit but has not started construction and another developer would like to take over the other development scope of water and/or sewer work, then the developers shall coordinate to withdraw the existing permit prior to the other developer submitting plans to WASD and other regulatory governmental agencies for review.

Connection to the sanitary sewer system is subject to the following conditions:

- Adequate transmission and plant capacity exist at the time of the owner's request consistent with policy WS-2 A (2) of the CDMP. Capacity evaluations of the plant for average flow and peak flows will be required. Connection to the COUNTY'S sewage system will be subject to the terms, covenants and conditions set forth in court orders, judgments, consent orders, consent decrees and the like entered into between the COUNTY and the United States, the State of Florida and/or any other governmental entity, including but not limited to, the Consent Order entered on April 9, 2014 in the United States of America, State of Florida and State of Florida Department of Environmental Protection v. Miami-Dade County, Case No. 1:12-cv-24400-FAM, as well as all other current, subsequent or future enforcement and regulatory actions and proceedings.

- Approval of all applicable governmental agencies having jurisdiction over these matters are obtained.

Any public water or sewer infrastructure must be within a public right-of-way, or within a utility easement.

Below please find additional links to the WASD portal, which provides information on the Construction & Development process for water and sewer infrastructure.

http://www.miamidade.gov/water/construction-development.asp

http://www.miamidade.gov/water/construction-service-agreement.asp

http://www.miamidade.gov/water/construction-existing-service.asp

http://www.miamidade.gov/water/library/forms/service-agreement.pdf

Should you have any questions, please contact Maria A. Valdes, Chief, Planning & Water Certification Section at (786) 552-8198 or mavald@miamidade.gov, Alfredo B. Sanchez at (786) 552-8237 or sanalf@miamidade.gov, or Benita Ramirez B. at (786) 552-8121 or benita.ramirez@miamidade.gov.

Memorandum

MIAMI-DADE COUNTY

Date: August 13, 2026

To: Eric Silva, AICP, Assistant Director
Department of Regulatory and Economic Resources

From: FOR: Raul A. Pino, PLS, Division Chief
Platting and Traffic Review Section
Department of Regulatory and Economic Resources

Subject: Z2025000254
Name: 288 ST LLC
Location: SW 199 Avenue and SW 241 Terrace
Section 01 Township 57 South Range 38 East

The Department of Regulatory and Economic Resources Platting and Traffic Review Section has reviewed the subject application and has **no objections.**

This land requires platting in accordance with Chapter 28 of the Miami-Dade County Code. Any right-of-way dedication per Miami-Dade Chapter 33-133 and Chapter 28 and/or improvements required will be accomplished thru the recording of the plat.

This application **does** meet the traffic concurrency criteria for an Initial Development Order.
It will generate approximately **414 PM** peak hour vehicle trips. The traffic distribution of these trips to the adjacent roadways reveals that the addition of this new trip **does not** exceed the acceptable level of service of the following roadways:

STA.#	LOCATION	LOS PRESENT	LOS W/PROJECT
9886	SW 187 Avenue south of SW 280 Street	C	C
9212	SW 177 Avenue north of SW 288 Street	C	C
9864	SW 167 Avenue north of SW 288 Street	D	D
9932	SW 288 Street west of US 1/SR 5	C	D
9936	SW 296 Street west of US 1/ SR 5	C	C
F-0043	SW 177 Avenue south of SW 296 Street	C	C

(*) Station 9932 is within 5% of reaching the roadway capacity limit.

The request herein, constitutes an Initial Development Order only, and one or more traffic concurrency determinations will subsequently be required before development will be permitted.

Notes: PM =Post Meridiem
The PM peak hour refers to the highest hour of vehicle trips generated during the afternoon peak hours of 4-6 PM

Standard Conditions:

- A letter or a plan containing the following certification signed and sealed by a State of Florida registered engineer shall be submitted as part of the paving and drainage plans: "I hereby certify that the all of the roads for the subject project comply with all of the applicable portions of the Manual of Uniform Minimum Standards for Design, Construction and Maintenance for Streets and Highways (Florida Greenbook) regarding: design speed, lane widths, horizontal alignment, vertical alignment, stopping sight distance, sight distance, horizontal clearance, vertical clearance, superelevation, shoulder widths, grades, bridge widths, etc."

- All landscaping, walls, fences, entrance features, etc. will be subject to the Safe Sight Distance Triangle as per Section 33-11 of the Miami-Dade County Code and G5.3 of the Public Works and Waste Management Department Manual.

Memorandum

Date: October 27, 2026

To: Eric Silva, Assistant Director
Regulatory and Economic Resources

From: Alejandro G Cuello, Principal Planner
Miami-Dade Fire Rescue Department

Subject: Z2025000254

The Miami-Dade Fire Rescue Department has no objection to request noted in the letter of intent uploaded to “EnerGov” on 11/17/2025. Any future site plans will need separate approval.

MDFR’s review of this application is limited to assessing fire department access and does not effectuate an approval of the building design. The future building’s design must be in compliance with the applicable requirements for the proposed use:

- Florida State Statute Chapter 633: Fire Prevention & Control
- Florida Administrative Code 69A
- Florida Fire Prevention Code (NFPA 1 and NFPA 101)
- Applicable adopted NFPA Standards
- County Code Chapter 14: Fire Prevention
- County Code Chapter 2, Article XIV(A): Water Supply for Fire Suppression

Water supply infrastructure for fire protection and fire hydrant installation(s) shall be provided in full compliance with all applicable Miami-Dade Fire Rescue requirements and standards.

For additional information, please contact acuello@miamidade.gov or call 305-775-3357.

Memorandum

Date: Thursday, August 6, 2026

Subject: Review of Z2025000254
Applicant Name: 288 ST LLC

Miami-Dade County Department of Transportation and Public Works (DTPW) has reviewed the subject application and provides the comments in Section I:

PROJECT LOCATION:

The project is located on the southwest corner of SW 288th Street and SW 177th Avenue/Krome Avenue, in unincorporated Miami-Dade County.

I. COMMENTS/RECOMMENDATION:

Traffic Engineering Division

A. Traffic Study Review Comments

For all subsequent submittals, please provide a response-to-comments document, along with a Traffic Study.

1. Based on a preliminary review of the proposed development, as described in the Letter of Intent (LOI) and the submitted CDMP Traffic Impact Study, the Applicant is requesting a Comprehensive Development Master Plan (CDMP) amendment to redesignate the Property from **Estate Density Residential** to **Business and Office**. Under the current future land use designation, the Property has a maximum development potential of 25 single-family detached dwelling units. Under the proposed **Business and Office** designation, the Property would have a maximum development potential of approximately 151,548 square feet of retail/commercial uses. Therefore, a **Level III Traffic Impact Study** is required. The study shall be prepared in accordance with the Traffic Engineering Division's standard methodology. Please contact the Traffic Engineering Division (TED) to schedule a methodology meeting to discuss the study requirements. For coordination, please contact Anamersy.Arce@miamidade.gov and Leanne.GarciaFernandez@miamidade.gov.
2. Submit the Traffic Methodology Memorandum through the DTPW System, ensuring that it incorporates all comments provided during the methodology meeting.
3. Please verify that the development details provided in the LOI are consistent with those presented in the Traffic Study. Both documents must be clearly defined and aligned with the proposed land uses and development intensities.

4. The development must include a schematic of a pedestrian trip generation based on its development and surrounding pedestrian generators (this must include transit facilities). Also, the study needs to evaluate the need to upgrade or install pedestrian infrastructure to improve safety and operations within the area of influence.
5. The study must evaluate the need and provide recommendations for dedicated left and right turn lanes at the proposed entrances. Please include a Turn Lane Analysis section in the report.
6. Please specify whether gates are proposed at the site entrances. If so, a queuing analysis must be included as part of the Traffic Study.

B. Site Plan Review Comments

For all subsequent submittals, please include a response-to-comments document, along with a detailed Site Plan and Landscape Plan.

1. SR 997/Krome Avenue/SW 177th Avenue is part of the State of Florida Highway system. All property development adjacent to a State Road must be reviewed by the Florida Department of Transportation (FDOT) for compliance with the Florida Administrative Code (FAC). Improvements within the FDOT Right-of-Way (R/W) must meet current FDOT Design Standards and may involve a property dedication to meet current FDOT Standards. No below or above-ground encroachments are allowed into the FDOT R/W. Access/driveway spacing must meet the criteria in FAC 14-96, and a pre-application meeting with the FDOT is required for driveway categories C, D, E, F, and G. Also, per FAC 14-86.003, a Drainage permit is required for all properties adjacent to a State Road, even if there is no proposed access/driveway connection. Please contact the FDOT District 6 Permits Office for FDOT permitting requirements/guidance: d6permitshelp@dot.state.fl.us , (305) 470-5367.
2. Exit driveways must comply with clear sight visibility requirements for both pedestrians and vehicular traffic. Provide clear sight visibility triangles on the site and landscape plans to demonstrate compliance with these requirements. Please ensure to clearly illustrate both (pedestrian and vehicular) sight triangles following the MDC Traffic Operations Manual and FDOT Standards. Note that according to the latest FDOT FDM manual Section 212.11.6, trees may not be placed within the hatched-out areas of the sight triangles, as shown in the figure below.

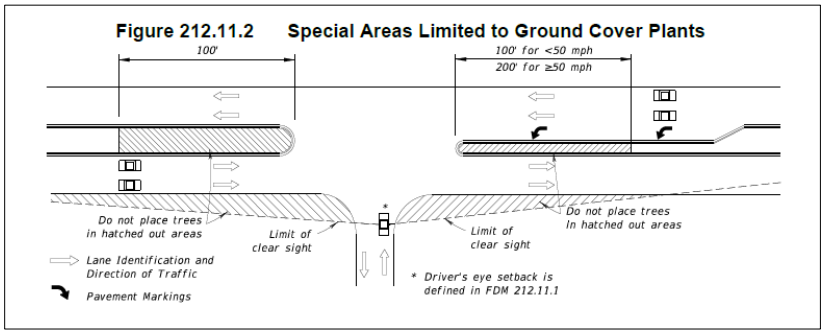

3. Driveways must comply with FDOT standards, which require a minimum width of 24 feet for two-way driveways and a maximum width of 15 feet for one-way driveways. Please show dimensions on the site plan. Additionally, all driveway connections must comply with access management standards.
4. Parking spaces must not be located within 25' of any stop sign or 25' from the right of way at entrance driveways (throat distance). Please show throat length dimensions on the site plan. Also, please ensure that conflict points are located at a minimum of 25' from the right-of-way line.
5. A minimum of 6 feet sidewalk must be kept within public right-of-way. For clear representation, please make sure to include the dimensions of the sidewalk on the plans.
6. Please provide a t-turnaround for all dead-end parking spaces.
7. If the proposed entrances (parking lot, garage, or any driveway) will be controlled by gates, the site plan must show the gate location, the distance between the gate and the property line, and the design and location of a turnaround area before the gate. All gated entrances must comply with the County's Entrance Features Requirements.
8. Show the trash collection truck maneuvering wheel path around the site. Note that no backing in/out is allowed within public right-of-way.
9. Please provide written approval from the Highway Division (Leandro Oña – Leandro.ona@miamidade.gov) for the proposed typical section/driveway connections on SW 288th Street.
10. The site plan must show all necessary roadways to complete the roadway network. The site plan must show required right-of-way dedications and show which roadways will be public/private.
11. A signed and sealed site plan must be submitted for DTPW review (hard copy not required). The site plan must clearly show pavement widths, radii, existing and proposed driveway connections, proposed circulation paths, pavements markings, lanes widths, signing, etc. A minimum of 5 feet must be provided from the property line to the driveway.

If you have any questions concerning the comments, or wish to discuss this matter further, please contact Anamersy Arce at anamersy.arce@miamidade.gov.

Memorandum

Date: October 26,2026

To: Eric Silva, Assistant Director for Development Services
Department of Regulatory and Economic Resources

From: Sarah Cody, Historic Preservation Chief
Department of Regulatory and Economic Resources

Subject: Zoning Review Z2025 – 000254 288 ST LLC

The Miami-Dade County Office of Historic Preservation has reviewed the subject application and has no comments or objections.

For any questions, please contact Sarah Cody at (305) 375-4438 or via email at sarah.cody@miamidade.gov.

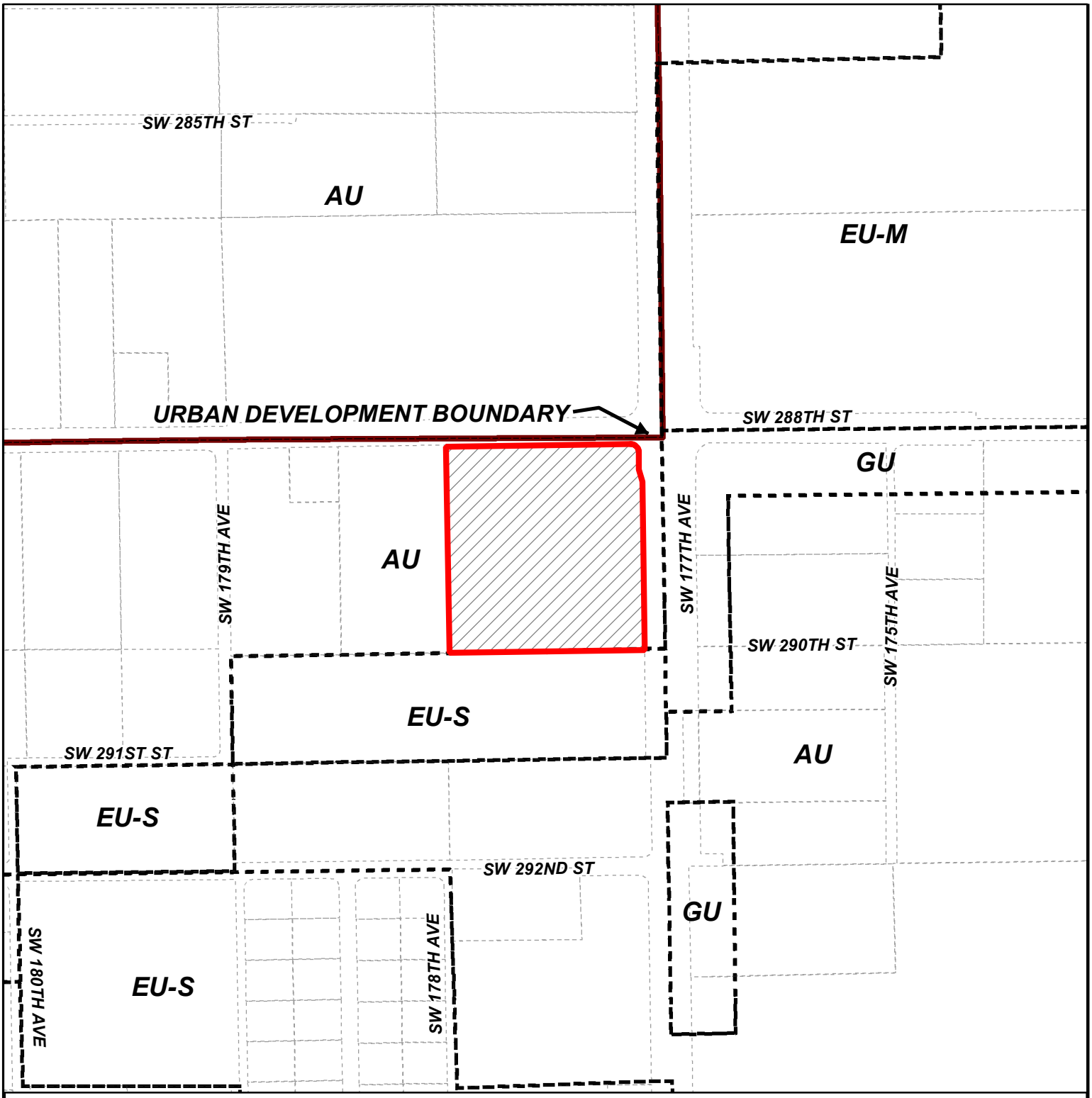

MIAMI-DADE COUNTY

HEARING MAP

Process Number

Z2025000254

Section: 01 Township: 57 Range: 38
Applicant: 288 ST LLC
Zoning Board: Board of County Commissioners
Commission District: 8
Drafter ID: E CESPEDES
Scale: NTS

Legend

N
W E
S

Subject Property Case

Zoning

MIAMI-DADE COUNTY

SKETCH CREATED ON: Monday, December 1, 2025

REVISION	DATE	BY



MIAMI-DADE COUNTY

AERIAL YEAR 2024

Process Number

Z2025000254

Legend

Subject Property

UDB

N
W E
S

Section: 01 Township: 57 Range: 38
Applicant: 288 ST LLC
Zoning Board: Board of County Commissioners
Commission District: 8
Drafter ID: E CESPEDES
Scale: NTS

MIAMI-DADE COUNTY

SKETCH CREATED ON: Monday, December 1, 2025

REVISION	DATE	BY

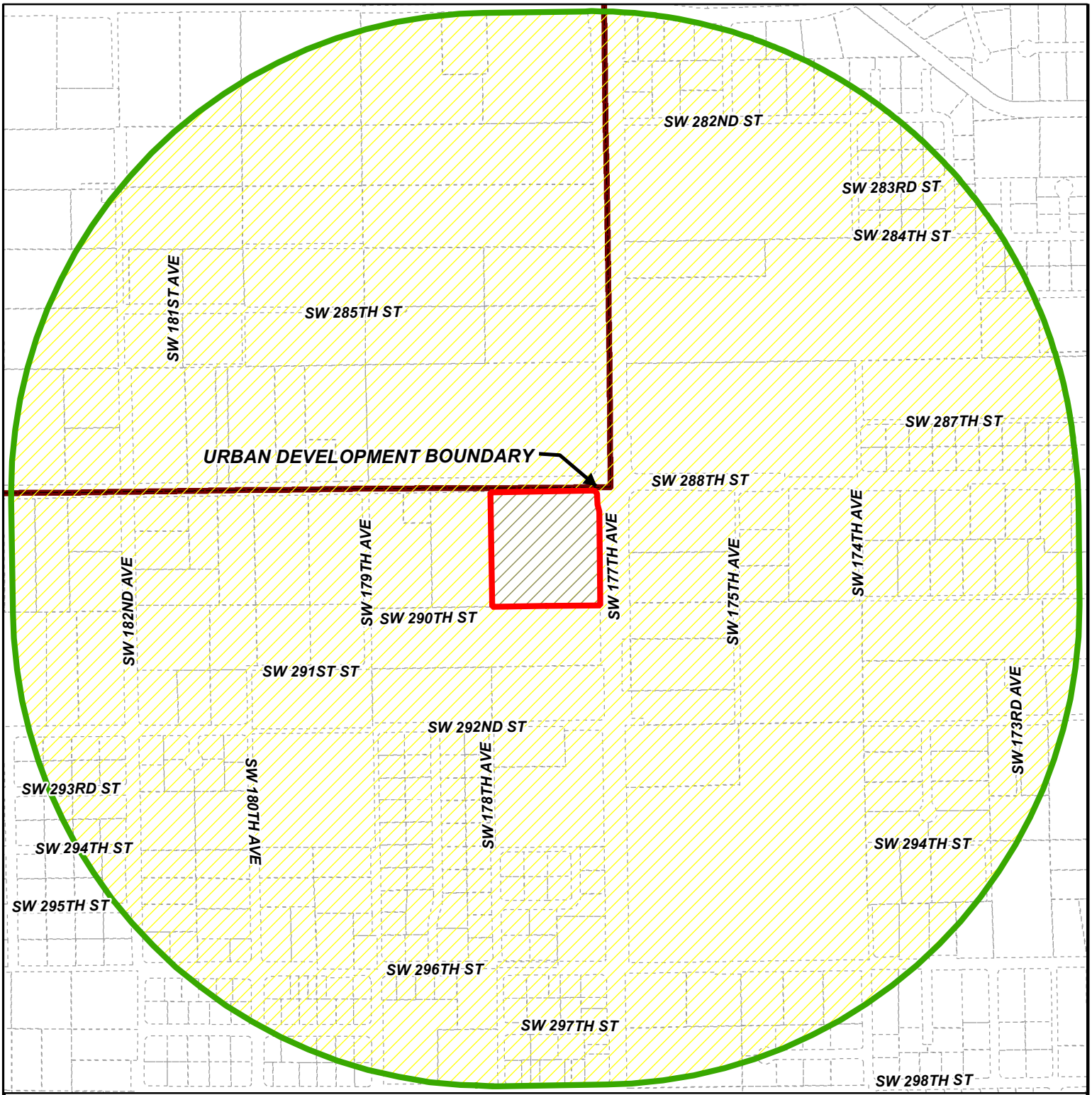

MIAMI-DADE COUNTY

RADIUS MAP

Process Number

Z2025000254

RADIUS: 2640

Section: 01 Township: 57 Range: 38
Applicant: 288 ST LLC
Zoning Board: Board of County Commissioners
Commission District: 8
Drafter ID: E CESPEDES
Scale: NTS

Legend

- Subject Property
- Buffer
- Property Boundaries
- UDB

N
W E
S

MIAMI-DADE COUNTY

SKETCH CREATED ON: Monday, December 1, 2025

REVISION	DATE	BY

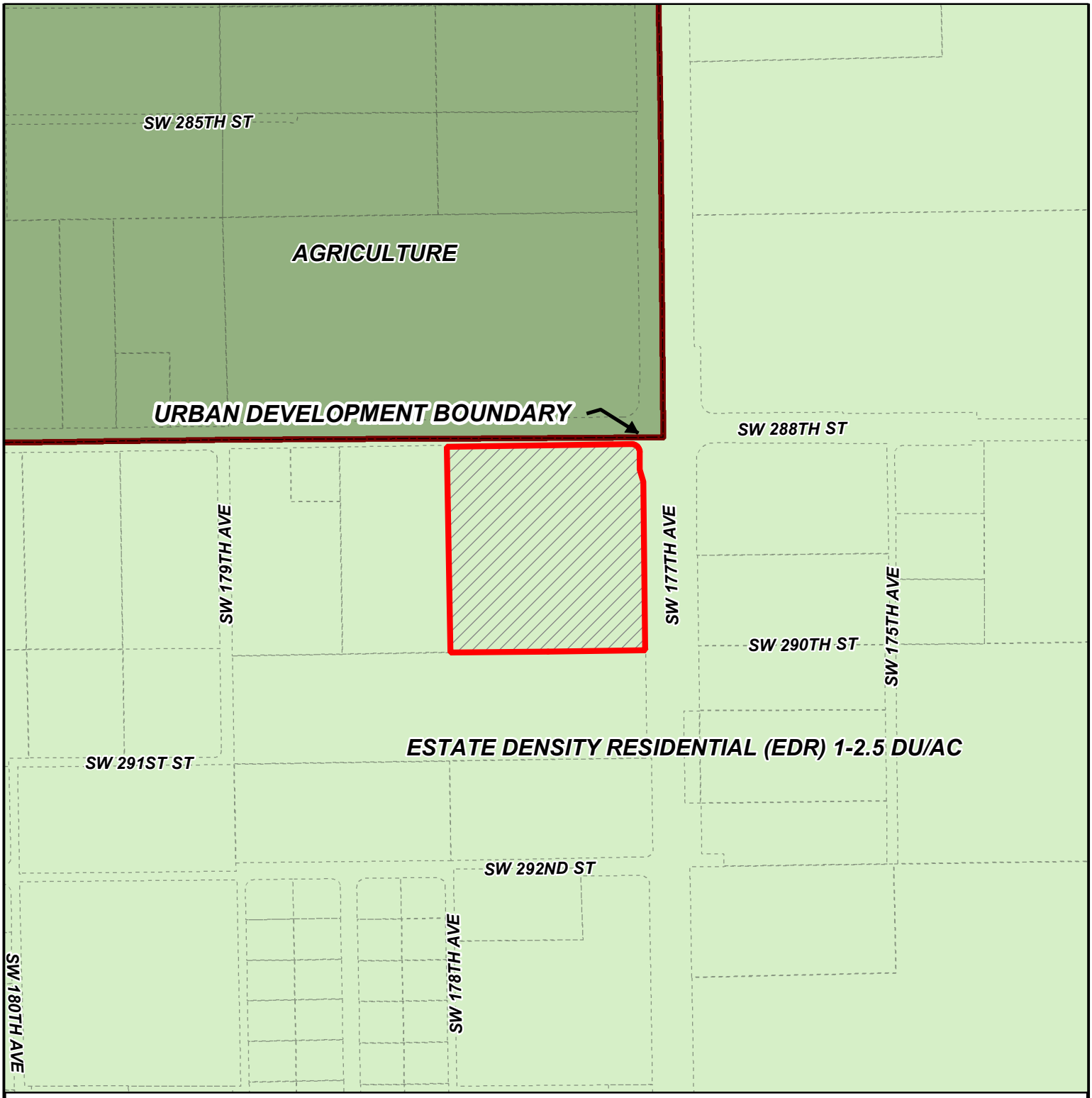

MIAMI-DADE COUNTY

CDMP MAP

Process Number

Z2025000254

Section: 01 Township: 57 Range: 38
Applicant: 288 ST LLC
Zoning Board: Board of County Commissioners
Commission District: 8
Drafter ID: E CESPEDES
Scale: NTS

Legend

Subject Property Case

N
W E
S

MIAMI-DADE COUNTY

SKETCH CREATED ON: Monday, December 1, 2025

REVISION	DATE	BY

RECEIVED MIAMI-DADE COUNTY PROCESS NO.: Z25-254 DATE: JAN 13 2026 BY: E128863

This instrument was prepared by:

Name: Hugo P. Arza, Esq. Address:
Holland & Knight LLP
701 Brickell Avenue, Suite 3300
Miami, Florida 33131

(Space Reserved for Clerk of the Court)

DECLARATION OF RESTRICTIONS

(Zoning Application)

WHEREAS, the undersigned **288 ST LLC.** (hereinafter, referred to as the "Owner"), holds the fee simple title to the land in Miami-Dade County, Florida, described in Exhibit "A", attached hereto, and hereinafter called the "Property", which is supported by the Opinion of Title; and

WHEREAS, the Owner has filed a zoning hearing application with the County's Department of Regulatory and Economic Resources pursuant to section 2-116.1 of the Code of Miami-Dade Count, which application requests a District Boundary Change from "AU" (Agricultural District) to "BU-1A" (Limited Business Use) and is identified as Public Hearing Application No. Z2025000254 (the "Zoning Application"); and

WHEREAS, the Owner has filed for a concurrent application for an amendment to the Miami-Dade County Comprehensive Development Master Plan (the "CDMP") as a Small Scale CDMP Application in the October 2025 Cycle, which amendment is identified as Application No. CDMP20250020 (the "Application"), which seeks to redesignate the Property from "Estate Density" residential to "Business and Office" to proceed with the proposed residential development (the "Development").

WHEREAS, the Application, which includes this Declaration of Restrictions that has been voluntarily proffered by the Owner, and the above-mentioned concurrent zoning hearing application were filed concurrently; and

NOW, THEREFORE, in order to assure the Miami-Dade County that the representations made by the Owner during the consideration of the Application will be abided by, the Owner freely, voluntarily, and without duress, hereby makes the following Declaration of Restrictions (the "Declaration") covering and running with the Property:

1. **Commercial Development.** The cumulative gross floor area of all commercial development on the Property shall be limited o a maximum of 151,548 square fate.

Miscellaneous

Covenant Running with the Land. This Declaration on the part of the Owner shall constitute

a covenant running with the land and may be recorded, at Owner's expense, in the public records of Miami-Dade County, Florida and shall remain in full force and effect and be binding upon the undersigned Owner, its heirs, successors and assigns until such time as the same is modified or released. These restrictions during their lifetime shall be for the benefit of, and limitation upon, all present and future owners of the real property and for the benefit of Miami-Dade County and the public welfare. The Owner, its heirs, successors and assigns, acknowledge that acceptance of this Declaration does not in any way obligate or provide a limitation on the County.

Term. This Declaration is to run with the land and shall be binding on all parties and all persons claiming under it for a period of thirty (30) years from the date this Declaration is recorded after which time it shall be extended automatically for successive periods of ten (10) years each, unless an instrument signed by the, then, owner(s) of the property has been recorded agreeing to change the covenant in whole, or in part, provided that the Declaration has first been modified or released by Miami-Dade County.

Modification, Amendment, Release. This Declaration of Restrictions may be modified, amended or released as to the Property, or any portion thereof, by a written instrument executed by the then owner(s) of the property, including joinders of all mortgagees, provided that the same is also approved by the Board of County Commissioners of Miami Dade County, Florida. Any such modification, amendment or release shall be subject to the provisions governing amendments to Comprehensive Plans, as set forth in Chapter 163, Part II, Florida Statutes or successor legislation that may, from time to time, govern amendments to Comprehensive Plans (hereinafter "Chapter 163"). Such modification, amendment or release shall also be subject to the provisions governing amendments to the CDMP as set forth in Section 2-116.1 of the Code of Miami-Dade County, or successor regulations governing modifications to the CDMP. In the event that the property is incorporated within a new municipality or annexed into an existing municipality, and the successor municipality amends, modifies, or declines to adopt the provisions of Section 2- 116.1 of the Miami-Dade County Code, then modifications, amendments or releases of this Declaration shall be subject to Chapter 163 and the provisions of such ordinances as may be adopted by such successor municipality for the adoption of amendments to its comprehensive plan; or, in the event that the successor municipality does not adopt such ordinances, subject to Chapter 163 and by the provisions for the adoption of zoning district boundary changes. It is provided, however, that in the event that the successor municipality approves a modification or deletion of this Declaration of Restrictions, such modification or deletion shall not be effective until approved by the Board of County Commissioners, in accordance with applicable procedures. Should this Declaration be so modified, amended, or released, the Director of the Department of Regulatory and Economic Resources or the executive officer of a successor department, or, in the absence of such Director or executive officer, by his or her assistant in charge of the office in his/her absence, shall execute a written instrument effectuating and acknowledging such modification, amendment, or release.

Enforcement. Enforcement shall be by action against any parties or person violating, or attempting to violate, any covenants. The prevailing party in any action or suit pertaining to or arising out of this Declaration shall be entitled to recover, in addition to costs and disbursements allowed by law, such sum as the Court may adjudge to be reasonable for the services of his attorney. This enforcement provision shall be in addition to any other remedies available at law, in equity or both.

County Inspections. As further part of this Declaration, it is hereby understood and agreed that any official inspector of Miami-Dade County, or its agents duly authorized, may have the privilege at any time during normal working hours of entering and inspecting the use of the premises to determine whether or not the requirements of the building and zoning regulations and the conditions herein agreed to are being

complied with.

Authorization for Miami-Dade County (or successor municipality) to Withhold Permits and Inspections. In the event the terms of this Declaration are not being complied with, in addition to any other remedies available, the County (or successor municipality) is hereby authorized to withhold any further permits and refuse to make any inspections or grant any approvals, until such time as this declaration is complied with.

Election of Remedies. All rights, remedies and privileges granted herein shall be deemed to be cumulative and the exercise of any one or more shall neither be deemed to constitute an election of remedies, nor shall it preclude the party exercising the same from exercising such other additional rights, remedies or privileges.

Presumption of Compliance. Where construction has occurred on the Property or any portion thereof, pursuant to a lawful permit issued by the County (or successor municipality), and inspections made and approval of occupancy given by the County (or successor municipality), then such construction, inspection and approval shall create a rebuttable presumption that the buildings or structures thus constructed comply with the intent and spirit of this Declaration.

Severability. Invalidation of any one of these covenants, by judgment of Court, shall not affect any of the other provisions which shall remain in full force and effect. However, if any material portion is invalidated, the County shall be entitled to revoke any approval predicated upon the invalidated portion.

Recordation and Effective Date. This Declaration shall be filed of record in the public records of Miami-Dade County, Florida at the cost of the Owner following the approval of the Application by the Board of County Commissioners. This Declaration shall become effective immediately upon recordation. Notwithstanding the previous sentence, if any appeal is filed, and the disposition of such appeal results in the denial of the Application, in its entirety, then this Declaration shall be null and void and of no further effect. Upon the disposition of an appeal that results in the denial of the Application, in its entirety, and upon written request, the Director of the Department of Regulatory and Economic Resources or the executive officer of the successor of said department, or in the absence of such director or executive officer by his/her assistant in charge of the office in his/her absence, shall forthwith execute a written instrument, in recordable form, acknowledging that this Declaration is null and void and of no further effect.

Acceptance of Declaration. The Owner acknowledges that acceptance of this Declaration does not obligate the County in any manner, nor does it entitle the Owner to a favorable recommendation or approval of any application, zoning or otherwise, and the Board of County Commissioners retains its full power and authority to deny each such application in whole or in part and decline to accept any conveyance.

Owner. The term Owner shall include all heirs, assigns, and successors in interest.

[Execution Pages Follow]

CONTACT YOUR APPLICATION MANAGER TO OBTAIN THE MOST CURRENT WORD TEMPLATES OF THE SIGNATURE/ACKNOWLEDGEMENT PAGES BASED ON OWNERSHIP TYPE.

RECEIVED MIAMI-DADE COUNTY PROCESS NO.: Z25-254 DATE: JAN 13 2026 BY: E128863

EXHIBIT "A"

Legal Description

288 ST, LLC - Zoning Hearing Application No. Z2025000254

OPINION OF TITLE

To: MIAMI-DADE COUNTY

With the understanding that this Opinion of Title is furnished to Miami-Dade County, as an inducement for acceptance of a Declaration of Restrictions pursuant to a Zoning Hearing Application No. Z2025000254, it is hereby certified that I have examined Chicago Title Insurance Company Property Information Report No. 12888836, covering the period from the beginning through the 30th day of December, 2025 at 11:00 p.m., (the "Title Evidence"), inclusive, for the real property described on **Exhibit "A"** attached hereto and made a part hereof by reference. I know of no reason that the Title Evidence is inaccurate or incomplete. as to the property more particularly described as follows:

I am of the opinion that on the last mentioned date, the fee simple title to the above-described real property was vested in:

288 ST, LLC, a Florida limited liability company (the "Company")

Further, I am of the opinion that Edward Perez as Manager of the Company is authorized to execute all documents on behalf of the Company. This is based solely on the State of Florida Division of Corporations' Sunbiz website. I further confirm that I have not reviewed any documentation which would contradict this opinion.

.

Subject to the following encumbrances, liens, and other exceptions:

1. **RECORDED MORTGAGES:**

    1. Commercial Real Estate Mortgage Future Advances and Future Obligations are Secured by this Real Estate Mortgage filed August 30, 2024, recorded in Official Records Bool 34386, Page 4433, in favor of Farm Credit of Florida ACA, in its sole capacity and as agent/nominee for Florida Federal Land Bank Association, FLCA.

    2. Collateral Assignment of Leases, Rents and Profits filed August 30, 2024, recorded in Official Records Book 34386, Page 4443.

2. **RECORDED CONSTRUCTION LIENS, CONTRACT LIENS AND JUDGMENTS:**

    None.

3. **GENERAL EXCEPTIONS:**

    1. All taxes for the year 2025 and subsequent years.

2. Rights of persons other than the above owners who are in possession.

3. Facts that would be disclosed upon accurate survey.

4. Any unrecorded labor, mechanics' or materialmen's liens.

5. Zoning and other restrictions imposed by governmental authority.

6. Any lien provided by County Ordinance or by Chapter 159, Florida Statutes, in favor of any city, town, village or port authority for unpaid service charges for service by any water, sewer or gas system supplying the property.

7. Any dispute as to the boundaries caused by a change in the location of any water body within or adjacent to the land and any adverse claim to all or part of the land that is or was previously under water.

4. **SPECIAL EXCEPTIONS:**

1. Plat filed November 14, 1925, recorded in Plat Book 22 Page 55. Shown for reference as to less-out portion of caption property.

2. Right of Way Monumentation Map filed February 13, 2023, recorded in Miscellaneous Book 154, Page 85.

3. Warranty Deed filed September 15, 2005, recorded in Official Records Book 23783, page 2835. Shown for reference as to less-out portion of caption property.

4. Stipulated Final Judgment as to Parcel 107 filed June 30, 2018, recorded in Official Records Book 31039, Page 1837. Shown for reference as to less-out portion of caption property.

NOTE: All references herein are to the Public Records of Miami-Dade County, Florida.

I HEREBY CERTIFY that I have reviewed all the aforementioned encumbrances and exceptions and that none of them hinder or affect the recording or enforcement of the Declaration of Restrictive Covenants ("Declaration").

Therefore, it is my opinion that the following parties must join in the Declaration in order to make the Declaration a valid and binding covenant on the lands described herein:

Name	Interest
288 ST, LLC, a Florida limited liability company	Owner
and;	
Farm Credit of Florida ACA, in its sole capacity and as agent/nominee for Florida Federal Land Bank Association, FLCA	Mortgagee

I HEREBY CERTIFY that the legal description contained in this Opinion of Title coincides with, and is the same as, the legal description in the proffered, recordable Declaration.

I, the undersigned, further certify that I am attorney-at-law duly admitted to practice in the State of Florida and a member in good standing of the Florida Bar.

Respectfully submitted this 15th day of January, 2026.

Jonathan S. Marcus
Florida Bar No. 333591
Holland & Knight LLP
P.O. Box 14070 (Zip Code 33302-4070)
515 East Las Olas Boulevard, Suite 1200
Fort Lauderdale, FL 33301
Telephone: (954) 468-7924

STATE OF FLORIDA

COUNTY OF BROWARD

The foregoing instrument was acknowledged before me by means of __X__ physical presence or _____ online notarization, this 15th day of January, 2026, by Jonathan S. Marcus, who is personally known to me.

JENNIFER KENT
MY COMMISSION # HH 244261
EXPIRES: March 23, 2026

Notary Public, State of Florida at Large

EXHIBIT "A"

The Northeast 1/4 of the Northeast 1/4 of the Southeast 1/4 of Section 1, Township 57 South, Range 38 East. Said lands situate, lying and being in Miami-Dade County, Florida.

Less and except therefrom that portion lying within parcel described in Warranty Deed recorded in Official Records Book 23783, Page 2835, more particularly described as follows:

A portion of Lots 1 through 14 inclusive, and the Public Utility Easement between Lots 1 through 5 inclusive, and Lots 6 and 23, Block 1, of CLIFTON TERRACE, according to the Plat thereof, as recorded in Plat Book 22, Page 55, of the Public Records of Miami-Dade County, Florida lying in the Southeast 1/4 of Section 1, Township 57 South, Range 38 East, Miami-Dade County, Florida, being more particularly described as follows:

COMMENCE at the Northeast Corner of the Southeast 1/4 of Section 1; THENCE South 89 degrees 06'18" West, along the North line of said Southeast 1/4 of Section 1, a distance of 89.99 feet; thence South 00 degrees 53'42" East, perpendicular to the previously described course, a distance of 30.00 feet, to a point on the North line of said Lot 1, said point also being the POINT OF BEGINNING of the parcel of land hereinafter to be described; thence South 89 degrees 06'18" West, along the South line of the North 30.00 feet of said Southeast 1/4 of Section 1, and along the North lines of said Lot 1, said Easement, and said Lots 6 through 14 inclusive, a distance of 494.04 feet, to the point of curvature of a circular curve concave to the Southeast, having a radius of 50.00 feet, and a chord bearing of South 76 degrees11'03" West; thence Westerly and Southwesterly along said circular curve to the left, through a central angle of 25 degrees 50'31" for an arc distance of 22.55 feet, to a non-tangent point of intersection with the North line of the South 35.00 feet of said Southeast 1/4 of Section 1; thence North 89 degrees 06'18" East, along the last described line, a distance of 530.83 feet, to the point of curvature of a circular curve concave to the Southwest, having a radius of 25.00 feet, and a chord bearing of South 45 degrees 53'51" East; thence Easterly, Southeasterly, and Southerly along said circular curve to the right, through a central angle of 89 degrees 59'41" for an arc distance of 39.27 feet, to a point of tangency with the West line of the East 50.00 feet of said Southeast 1/4 of Section 1; thence South 00 degrees 54'01" East, along the last described line, a distance of 6.15 feet; thence South 89 degrees 05'59" West, perpendicular to the previously described line, a distance of 2.00 feet; thence South 00 degrees 54'01" East, perpendicular to the previously described line, a distance of 6.50 feet; thence North 89 degrees 05'59" East, perpendicular to the previously described line, a distance of 2.00 feet, to the point of intersection with the West line of the East 50.00 feet of said Southeast 1/4 of Section 1; thence South 00 degrees 54'01" East, along the last described line, a distance of 210.62 feet, to a non-tangent point of intersection with a circular curve concave to the Northwest, having a radius of 50.00 feet, and a chord bearing of North 17 degrees 32'05" East; thence from a tangent bearing of North 35 degrees 58'11" East, run Northeasterly and Northerly along said circular curve to the left, through a central angle of 36 degrees 52'12" for an arc distance of 32.18 feet, to a point of tangency with the West line of the East 40.00 feet of said Southeast one-quarter (S.E. 1/4) of

Section 1, and the East lines of said Lots 5, 4, 3, 2, and 1; thence North 00 degrees 54'01" West, along the last described line, a distance of 173.27 feet, to the point of curvature of a circular curve concave to the Southwest, having a radius of 50.00 feet, and a chord bearing of North 45 degrees 53'51" West; thence Northerly, Northeasterly and Easterly along said circular curve to the left, through a central angle of 89 degrees 59'41" for an arc distance of 78.54 feet to the POINT OF BEGINNING.

And further less any portion lying within Parcel 107 described in Final Judgment recorded in Official Records Book 31039, Page 1837, more particularly described as follows:

A parcel of land lying in the Southeast 1/4 of Section 1, Township 57 South, Range 38 East, Miami-Dade County, Florida, being more particularly described as follows:

Commence at the NW corner of the Southeast 1/4 of said Section 1, being a found spike; thence North 89°07'15" East, along the North line of the Southeast 1/4 of said Section 1, for a distance of 1,992.80 feet to the POINT OF BEGINNING of the hereinafter described parcel of land:

Thence continue along said North line of the Southeast 1/4 of Section 1, North 89 degrees 07'15" East for a distance of 574.30 feet; thence departing said North line of the Southeast 1/4 of Section 1, South 00 degrees 52'45" East for a distance of 30.00 feet; thence South 89 degrees 07'15" West for a distance of 494.14 feet to a point on a tangent curve concave to the Southeast having a radius of 50.00 feet; thence Southwesterly along the arc of said curve, through a central angle of 25 degrees 50'31, for an arc distance of 22.55 feet to a non-tangent point; thence North 89 degrees 07'15" East for a distance of 530.93 feet to a point on a tangent curve concave to the Southwest having a radius of 25.00 feet; thence Southeasterly along the arc of said curve, through a central angle of 89 degrees 58'45", for an arc distance of 39.26 feet to a point of tangency and a point on the existing Westerly Right-of-Way line of State Road No. 997 (Krome Avenue / S.W. 177th Avenue) as shown on Florida Department of Transportation Right-of-Way Map for State Road No. 997 (Krome Avenue), Section 87150, Financial Project No. 2496145; thence along the existing Westerly Right-of-Way line of State Road 997 (Krome Avenue / S.W. 177th Avenue) the following (15) fifteen courses: South 00 degrees 54'00" East for a distance of 6.15 feet; thence South 89 degrees 06'00" West for a distance of 2.00 feet; thence South 00 degrees 54'00" East for a distance of 6.50 feet; thence North 89 degrees 06'00" East for a distance of 2.00 feet; thence South 00 degrees 54'00" East for a distance of 210.62 feet to a point on a non-tangent curve concave to the Northwest having a radius of 50.00 feet, a chord bearing of North 17 degrees 32'06" East and a chord distance of 31.62 feet; thence Northeasterly along the arc of said curve, through a central angle of 36 degrees 52'12", for an arc distance of 32.18 feet to a point of tangency; thence South 00 degrees 54'00" East for a distance of 67.53 feet; thence North 89 degrees11'13" East for a distance of 3.66 feet to a point on a tangent curve concave to the Northwest having a radius of 9.80 feet; thence Northeasterly along the arc of said curve, through a central angle of 65 degrees 24'39", for an arc distance of 11.18 feet to a point of tangency; thence North 23 degrees 46'34" East for a distance of 8.64 feet; thence South 01 degrees 01'31" East for a distance of 52.02 feet to a point on a non-tangent curve concave to the Southwest having a radius of 13.86 feet, a chord bearing of North 44 degrees 56'15" West and a chord distance of 19.16 feet; thence Northwesterly along the arc of said curve, through a central angle of 87 degrees 28'44", for an arc distance of 21.16 feet to a non-tangent point; thence South 86 degrees 00'40" West for a distance of 2.98 feet;

thence South 00 degrees 54'00" East for a distance of 67.61 feet to a point on a tangent curve concave to the Southwest having a radius of 50.00 feet; thence Northwesterly along the arc of said curve, through a central angle of 36 degrees 52'12", for an arc distance of 32.18 feet; thence departing said existing Westerly Right-of-Way line of State Road 997, South 89 degrees 06'00" West for a distance of 6.00 feet; thence North 00 degrees 54'00" West for a distance of 189.11 feet; thence North 15 degrees 54'00"West for a distance of 73.41 feet; thence North 00 degrees 54'00" West for a distance of 53.26 feet to a point on a tangent curve concave to the Southwest having a radius of 25.00 feet; thence Northwesterly along the arc of said curve, through a central angle of 89 degrees 58'45", for an arc distance of 39.26 feet to a point of tangency; thence South 89 degrees 07'15" West for a distance of 564.21 feet; thence North 00 degrees 59'23" West for a distance of 45.00 feet to a point on the aforementioned North line of the Southeast 1/4 of Section 1 and the POINT OF BEGINNING.

AND

Commence at the NW corner of the Southeast 1/4 of said Section 1, being a found spike; thence North 89 degrees 07'15" East, along the North line of the Southeast 1/4 of said Section 1, for a distance of 2,657.07 feet to the NE corner of the Southeast 1/4 of said Section 1; thence South 00 degrees 54'00" East, along the East line of the Southeast 1/4 of said Section 1, for a distance of 645.87 feet; thence South 89 degrees 06'00" West, at a right angle to the last described course, for a distance of 21.80 feet to a point on the existing Westerly Maintained Right-of-Way line of State Road No. 997 (Krome Avenue / S.W. 177th Avenue) as shown on Florida Department of Transportation Right-of-Way Maintenance Map for State Road No. 997 (Krome Avenue), Section 87150, recorded in Road Plat Book 153, Page 82, of the Public Records of Miami-Dade County, Florida and the POINT OF BEGINNING of the hereinafter described parcel of land:

Thence along said existing Westerly Maintained Right-of-Way line of State Road No. 997, South 01 degrees 39'23"East for a distance of 20.82 feet; thence South 89 degrees 15'15"West for a distance of 28.47 feet; thence North 00 degrees 54'00"West for a distance of 50.11 feet to a point on a non-tangent curve concave to the Northeast and having a radius of 50.00 feet, a chord bearing of North 17 degrees 32'06"East, and a chord distance of 31.62 feet; thence Northeasterly along the arc of said curve, through a central angle of 36 degrees 52'12", for an arc distance of 32.18 feet to a tangent point on the aforementioned existing Westerly Maintained Right-of-Way line of State Road No. 997; thence South 00 degrees 54'00"East, along said Westerly Maintained Right-of-Way line of State Road No. 997, for a distance of 66.74 feet; thence North 88 degrees 29'59"East for a distance of 12.00 feet; thence North 39 degrees 36'39"E for a distance of 9.54 feet to the POINT OF BEGINNING.

Folio No.: 30-7801-000-0610