OFFICIAL FILE COPY
CLERK OF THE BOARD
OF COUNTY COMMISSIONERS
MIAMI-DADE COUNTY, FLORIDA

Memorandum

MIAMI-DADE COUNTY

Date: February 19, 2014

Agenda Item No. 3(B)(1)

To: Honorable Chairwoman Rebeca Sosa
and Members, Board of County Commissioners

From: Carlos A. Gimenez
Mayor

Subject: Resolution Approving Reimbursable Agreement with the Florida Department of Transportation and Florida East Coast Railway Company, FDOT Project No. 43367415701

Resolution No. R-156-14

RECOMMENDATION

It is recommended that the Board of County Commissioners (Board) adopt the attached resolution approving a Railroad Reimbursement Agreement (RA) FM# 43367415701 with the Florida Department of Transportation (FDOT) and Florida East Coast Railway Company (FEC), for the reconstruction of crossing devices at the railroad intersection at NW 16th Street and NW 72nd Avenue.

SCOPE

Miami International Airport (MIA) is located primarily within Chairwoman Rebeca Sosa's District 6; however, the impact of this agenda item is countywide as MIA is a regional asset.

FISCAL IMPACT

The estimated construction cost of the project is $108,190.00, with work performed and funded by FEC, subject to 100% reimbursement by FDOT. After completion of the construction of the crossing signals, 50% of the $3,402.00 annual maintenance cost of the signals shall be paid by the Miami-Dade Aviation Department (MDAD) out of budgeted maintenance funds.

PROJECT MONITOR

The Railroad Reimbursement Agreement will be managed by MDAD Chief of Aviation Planning Ammad Riaz. Maintenance reimbursements will be managed by MDAD Division Director Facilities Development and Management Pedro Hernández.

BACKGROUND

The Office of Florida's Department of Transportation District VI conducts annual diagnostic field reviews of railroad crossings in Miami-Dade County to make recommendations and propose improvements under the Signal Safety Program funded with federal dollars and allocated by FDOT's Central Rail Office. During last year's field reviews, FDOT identified the NW 16th Street railroad crossing located on MIA property as needing improvements. As the crossing lies within the jurisdiction of MDAD, FDOT approached the Aviation Department to modify the crossing.

Under this tri-party Reimbursable Agreement (among FDOT, the Florida East Coast Railway, and the County), FDOT will reimburse FEC for 100% of the cost of the crossing upgrades, and the FEC and the County will each be responsible for 50% of future annual maintenance costs, estimated at $1,701.00 for each party.

Jack Osterholt, Deputy Mayor

MEMORANDUM

(Revised)

TO: Honorable Chairwoman Rebeca Sosa
and Members, Board of County Commissioners

DATE: February 19, 2014

FROM: R. A. Cuevas, Jr.
County Attorney

SUBJECT: Agenda Item No. 3(B)(1).

Please note any items checked.

_____ **"3-Day Rule" for committees applicable if raised**

_____ **6 weeks required between first reading and public hearing**

_____ **4 weeks notification to municipal officials required prior to public hearing**

_____ **Decreases revenues or increases expenditures without balancing budget**

_____ **Budget required**

_____ **Statement of fiscal impact required**

_____ **Ordinance creating a new board requires detailed County Mayor's report for public hearing**

✓ **No committee review**

_____ **Applicable legislation requires more than a majority vote (i.e., 2/3's ____, 3/5's ____, unanimous _____) to approve**

_____ **Current information regarding funding source, index code and available balance, and available capacity (if debt is contemplated) required**

Approved _____ Mayor

Veto _____

Override _____

Agenda Item No. 3(B)(1)
2-19-14

RESOLUTION NO. R-156-14

RESOLUTION RELATING TO MIAMI INTERNATIONAL AIRPORT; APPROVING THE ACCEPTANCE AND EXECUTION OF A RAILROAD REIMBURSEMENT AGREEMENT FOR FINANCIAL PROJECT NUMBER 43367415701 WITH THE FLORIDA DEPARTMENT OF TRANSPORTATION AND THE FLORIDA EAST COAST RAILWAY COMPANY UNDER WHICH THE COUNTY'S AVIATION DEPARTMENT WILL BE RESPONSIBLE FOR 50% OF THE ANNUAL MAINTENANCE COSTS INITIALLY IN THE AMOUNT OF $1,701.00 FOR THE RECONSTRUCTED RAILROAD CROSSING AT NW 16TH STREET

WHEREAS, this Board desires to accomplish the purposes outlined in the accompanying memorandum and document, copies of which are incorporated herein by reference,

NOW, THEREFORE, BE IT RESOLVED BY THE BOARD OF COUNTY COMMISSIONERS OF MIAMI-DADE COUNTY, FLORIDA, that this Board approves the acceptance and execution of a Railroad Reimbursement Agreement for Financial Project Number 43367415701 with the Florida Department of Transportation and the Florida East Coast Railway Company for reconstruction of a railroad crossing at NW 16th Street on property of the County under the control of the Aviation Department, such Agreement providing for FDOT to reimburse the FEC for 100% of the costs of reconstruction of the crossing and for both the FEC and the Aviation Department thereafter to split the future maintenance cost of the reconstructed railroad crossing in the estimated initial annual amount of $1701.00 for each party.

The foregoing resolution was offered by Commissioner **Sally A. Heyman**, who moved its adoption. The motion was seconded by Commissioner **José "Pepe" Diaz** and being put to a vote, the vote was as follows:

Rebeca Sosa, Chairwoman	**aye**		
Lynda Bell, Vice Chair	**aye**		
Bruno A. Barreiro	**aye**	Esteban L. Bovo, Jr.	**aye**
Jose "Pepe" Diaz	**aye**	Audrey M. Edmonson	**aye**
Sally A. Heyman	**aye**	Barbara J. Jordan	**aye**
Jean Monestime	**aye**	Dennis C. Moss	**aye**
Sen. Javier D. Souto	**aye**	Xavier L. Suarez	**absent**
Juan C. Zapata	**aye**		

The Chairperson thereupon declared the resolution duly passed and adopted this 19th day of February, 2014. This resolution shall become effective ten (10) days after the date of its adoption unless vetoed by the Mayor, and if vetoed, shall become effective only upon an override by this Board.

MIAMI-DADE COUNTY, FLORIDA
BY ITS BOARD OF
COUNTY COMMISSIONERS

HARVEY RUVIN, CLERK

By: **Christopher Agrippa**
Deputy Clerk

Approved by County Attorney as
to form and legal sufficiency.

Thomas P. Abbott

STATE OF FLORIDA DEPARTMENT OF TRANSPORTATION

725-090-27
RAIL
OGC - 04/12

RAILROAD REIMBURSEMENT AGREEMENT
GRADE CROSSING TRAFFIC CONTROL DEVICES - COUNTY

FINANCIAL PROJECT NO.	ROAD NAME OR NUMBER	COUNTY NAME	PARCEL & R/W NUMBER	FAP NUMBER
43367415701	NW 16th Street	MIAMI-DADE	1(SIG-B)	N/A

THIS AGREEMENT, made and entered into this _____ day of _____, _____, by and between the STATE OF FLORIDA DEPARTMENT OF TRANSPORTATION, hereinafter called the DEPARTMENT, and Florida East Coast Railway Company, a corporation organized and existing under the laws of Florida, with its principal place of business in the City of Jacksonville, County of Duval, State of Florida, hereinafter called the COMPANY; and Miami-Dade County, a political subdivision of the State of Florida, acting by and through its Board of County Commissioners, hereinafter called the COUNTY.

WITNESSETH:

WHEREAS, the DEPARTMENT is constructing, reconstructing or otherwise changing a portion of the Public Road System, designated by the Financial Project ID 43367415701, on NW 16th Street, which crosses at grade the right of way and tracks of the COMPANY'S Milepost LR 11+480', FDOT/AAR Crossing Number 272788G, at or near NW 16th Street, as shown on DEPARTMENT'S Plan Sheet No. N/A, attached hereto as a part hereof; and

NOW, THEREFORE, in consideration of the mutual undertakings as herein set forth, the parties hereto agree as follows:

1. The COMPANY shall furnish the necessary materials and install Automatic Grade Crossing Signals Type 3 Class 3 and/or other traffic control devices at said location on an actual cost basis and in accordance with (1) the attached detailed statement of the work, plans, and specifications; and (2) the DEPARTMENT'S Plans and Standard Index Number 17882 attached hereto and made a part hereof.

2. After installation of said signals is completed, fifty (50%) percent of the expense thereof in maintaining the same shall be borne by the COUNTY and fifty (50%) percent shall be borne by the COMPANY, as enumerated by the Schedule of Annual Cost of Automatic Highway Grade Crossing Devices attached hereto and by this reference made a part hereof and subject to future revision.

3. After said signals have been installed and found to be in satisfactory working order by the parties hereto, the same shall be immediately put into service, operated and maintained by the COMPANY so long as said COMPANY or its successors or assigns shall operate the said signals at said grade crossing; or until it is agreed between the parties hereto that the signals are no longer necessary or until the said crossing is abandoned; or legal requirements occur which shall cease operation of signals thereat.

The COMPANY agrees that any future relocation or adjustment of said signals shall be performed by the COMPANY, but at the expense of the party initiating such relocation. Upon relocation the maintenance responsibilities shall be in accordance with the provisions of this agreement. It is further agreed that the cost of maintaining any additional or replacement signal equipment at the same location will be shared as provided under Paragraph 2. above.

4. Unless otherwise agreed upon herein, the COUNTY agrees to ensure that at the crossing the advance warning signs and railroad crossing pavement markings will conform to the U.S. Department of Transportation Manual on Uniform Traffic Control Devices within 30 days of notification that the railroad signal improvements have been completed and that such signs and pavement markings will be continually maintained at an acceptable level.

5. The COMPANY hereby agrees to install and/or adjust the necessary parts of its facilities along said road in accordance with the provisions set forth in the:

☐ (a) DEPARTMENT Procedure No. 725-080-002 Appendix D.4, and Rule 14.57.011 "Public Railroad-Highway Grade Crossing Costs", Florida Administrative Code.

☒ (b) Federal Highway Administration Federal-Aid Policy Guide, 23 C.F.R. Subchapter G, Part 646, Subpart B, and 23 C.F.R., Subchapter B, Part 140, Subpart I,

and any supplements thereto or revisions thereof, which, by reference hereto, are made a part hereof. The COMPANY further agrees to do all of such work, with its own forces or by a contractor paid under a contract let by the COMPANY, all under the supervision and approval of the DEPARTMENT and the Federal Highway Administration, when applicable.

6. The DEPARTMENT hereby agrees to reimburse the COMPANY for all costs incurred by it in the installation and/or adjustment of said facilities, in accordance with the provisions of Procedure No. 725-080-002 Appendix D-4 "Billing Requirements," and any supplements thereto or revisions thereof. It is understood and agreed by and between the parties hereto that preliminary engineering costs not incorporated within this agreement shall not be subject to payment by the DEPARTMENT.

7. Attached hereto, and by this reference made a part hereof, are plans and specifications of the work to be performed by the COMPANY pursuant to the terms hereof, and an itemized estimate of the cost thereof in the amount of $ 108,190.00 . All work performed by the COMPANY pursuant hereto, shall be performed according to these plans and specifications as approved by the DEPARTMENT and the Federal Highway Administration if federal aid participating; and all subsequent plan changes shall likewise be approved by the DEPARTMENT and the Federal Highway Administration, when applicable.

8. All labor, services, materials, and equipment furnished by the COMPANY in carrying out the work to be performed hereunder shall be billed by the COMPANY direct to the DEPARTMENT. Separate records as to the costs of

contract bid items and force account items performed for the COMPANY shall also be furnished by the COMPANY to the DEPARTMENT.

9. The COMPANY has determined that the method to be used in developing the relocation or installation cost shall be as specified for the method checked and described hereafter:

☒ (a) Actual and related indirect costs accumulated in accordance with a work order accounting procedure prescribed by the applicable Federal or State regulatory body.

☐ (b) Actual and related indirect costs accumulated in accordance with an established accounting procedure developed by the COMPANY and approved by the DEPARTMENT.

☐ (c) An agreed lump sum $ 0.00 , as supported by a detail analysis of estimated cost attached hereto. (NOTE: This method is not applicable where the estimated cost of the proposed adjustment exceeds $100,000.)

10. The installation and/or adjustment of the COMPANY'S facility as planned ☐ will ☒ will not involve additional work over and above the minimum reimbursable requirements of the DEPARTMENT. (If upgrading and/or nonreimbursable work is involved at the option of the COMPANY, then credit against the cost of the project is required and will be governed by the method checked and described hereafter):

☐ (a) _____ % will be applied to the final billing of work actually accomplished to determine required credit for (betterment) and/or (expired service life) and/or (nonreimbursable segments).

☐ (b) All work involving nonreimbursable segments will be performed by special COMPANY work or job order number apart and separate from the reimbursable portion of the work; such work or job order number to be _____ . The COMPANY further agrees to clearly identify such additional work areas in the COMPANY'S plans and estimates for the total work covered by this Agreement.

☐ (c) $ 0.00 credited for ☐ betterment ☐ expired service life ☐ nonreimbursable segments in accord with Article 9.(c) hereinabove.

11. It is specifically agreed by and between the DEPARTMENT and the COMPANY that the DEPARTMENT shall receive fair and adequate credit for any salvage which shall accrue to the COMPANY as a result of the above installation and/or adjustment work.

12. It is further agreed that the cost of all improvements made during this adjustment work shall be borne by the COMPANY, subject only to the DEPARTMENT bearing such portion of this cost as represents the cost of adjustment of previously existing facility, less salvage credit as set forth in the immediately preceding paragraph.

13. Upon completion of the work the COMPANY shall, within one hundred eighty (180) days, furnish the DEPARTMENT with two (2) copies of its final and complete billing of all costs incurred in connection with the work performed hereunder, such statement to follow as closely as possible the order of the items contained in the estimate attached hereto. The totals for labor, overhead, travel expense, transportation, equipment, material and supplies, handling costs and other services shall be shown in such a manner as will permit ready comparison with the approved plans and estimates. Materials shall be itemized where they represent major components of cost in the relocation following the pattern set out in the approved estimate as closely as is possible. Salvage credits from recovered and replaced permanent and recovered temporary materials shall be reported in said bills in relative position with the charge for the replacement or the original charge for temporary use.

The final billing shall show the description and site of the Project; the date on which the first work was performed, or, if preliminary engineering or right-of-way items are involved, the date on which the earliest item of billed expense was incurred; the date on which the last work was performed or the last item of billed expense was incurred; and the location where the records and accounts billed can be audited. Adequate reference shall be made in the billing to the COMPANY'S records, accounts and other relevant documents. All cost records and accounts shall be subject to audit by a representative of the DEPARTMENT. Upon receipt of invoices, prepared in accordance with the provisions of the above indicated Reimbursement Policy, the DEPARTMENT agrees to reimburse the COMPANY in the amount of such actual costs as approved by the DEPARTMENT'S auditor.

14. Payment shall be made only after receipt and approval of goods and services unless advance payments are authorized by the DEPARTMENT's Comptroller under Section 334.044(29), F.S., or by the Department of Financial Services under Section 215.422(14), Florida Statutes (F.S.).

15. In accordance with Section 287.058, Florida Statutes, the following provisions are in this Agreement: If this Contract involves units of deliverables, then such units must be received and accepted in writing by the Contract Manager prior to payments. Bills for fees or other compensation for services or expenses shall be submitted in detail sufficient for a proper preaudit and postaudit thereof.

16. Bills for travel expenses specifically authorized in this agreement shall be submitted and paid in accordance with DEPARTMENT Rule 14-57.011 "Public Railroad-Highway Grade Crossing Costs" and the Federal Highway Administration Federal-Aid Policy Guide, Subchapter B, Part 140, Subpart I "Reimbursement for Railroad Work."

17. In accordance with Section 215.422, Florida Statutes, the following provisions are in this Agreement: Contractors providing goods and services to the Department should be aware of the following time frames. Upon receipt, the Department has five (5) working days to inspect and approve the goods and services, unless the Agreement specifies otherwise. The Department has 20 days to deliver a request for payment (voucher) to the Department of Financial Services. The 20 days are measured from the latter of the date the invoice is received or the goods or services are received, inspected and approved.

If a payment is not available within 40 days, a separate interest penalty at a rate as established pursuant to Section 215.422(3)(b), Florida Statutes, will be due and payable, in addition to the invoice amount, to the Contractor. Interest penalties of less than one (1) dollar will not be enforced unless the Contractor requests payment. Invoices which have to be returned to a Contractor because of Contractor preparation errors will result in a delay in the payment. The invoice payment requirements do not start until a properly completed invoice is provided to the Department.

A Vendor Ombudsman has been established within the Department of Financial Services. The duties of this individual include acting as an advocate for contractors/vendors who may be experiencing problems in obtaining timely payment(s) from a state agency. The Vendor Ombudsman may be contacted at (850) 413-5516 or by calling the Division of Consumer Services at 1-877-693-5236.

18. Records of costs incurred under terms of this Agreement shall be maintained and made available upon request to the Department at all times during the period of this Agreement and for five years after final payment is made. Copies of these documents and records shall be furnished to the Department upon request. Records of costs incurred includes the Contractor's general accounting records and the project records, together with supporting documents and records, of the Contractor and all subcontractors performing work on the project, and all other records of the Contractor and subcontractors considered necessary by the Department for a proper audit of costs.

19. In the event this contract is for services in excess of TWENTY FIVE THOUSAND DOLLARS ($25,000.00) and a term for a period of more than one year, the provisions of Section 339.135(6)(a), Florida Statutes, are hereby incorporated:

> The Department, during any fiscal year, shall not expend money, incur any liability, or enter into any contract which, by its terms, involves the expenditure of money in excess of the amounts budgeted as available for expenditure during such fiscal year. Any contract, verbal or written, made in violation of this subsection is null and void, and no money may be paid on such contract. The Department shall require a statement from the Comptroller of the Department that such funds are available prior to entering into any such contract or other binding commitment of funds. Nothing herein contained shall prevent the making of contracts for periods exceeding one year, but any contract so made shall be executory only for the value of the services to be rendered or agreed to be paid for in succeeding fiscal years; and this paragraph shall be incorporated

verbatim in all contracts of the Department which are for an amount in excess of TWENTY FIVE THOUSAND DOLLARS ($25,000.00) and which have a term for a period of more than one year.

20. In accordance with Section 287.133 (2)(a), Florida Statutes, the following provisions are included in this Agreement:

A person or affiliate who has been placed on the convicted vendor list following a conviction for a public entity crime may not submit a bid, proposal, or reply on a contract to provide any goods or services to a public entity; may not submit a bid, proposal, or reply on a contract with a public entity for the construction or repair of a public building or public work; may not submit bids, proposals, or replies on leases of real property to a public entity; may not be awarded or perform work as a contractor, supplier, subcontractor, or consultant under a contract with any public entity; and may not transact business with any public entity in excess of the threshold amount provided in s.287.017 for CATEGORY TWO for a period of 36 months following the date of being placed on the convicted vendor list.

21. In accordance with Section 287.134(2)(a), Florida Statutes, the following provisions are included in this Agreement:

An entity or affiliate who has been placed on the discriminatory vendor list may not submit a bid, proposal, or reply on a contract to provide any goods or services to a public entity; may not submit a bid, proposal, or reply on a contract with a public entity for the construction or repair of a public building or public work; may not submit bids, proposals, or replies on leases of real property to a public entity; may not be awarded or perform work as a contractor, supplier, subcontractor, or consultant under a contract with any public entity; and may not transact business with any public entity.

22. In accordance with Section 287.0582, Florida Statutes, the following provision is included in this Agreement:

The Department's obligation to pay under this contract is contingent upon an annual appropriation by the Florida Legislature.

23. ~~The COMPANY covenants and agrees that it will indemnify and hold harmless the DEPARTMENT and all of the DEPARTMENT'S officers, agents, and employees from any claim, loss, damage, cost charge, or expense arising out of any act, action, neglect, omission or delay by the COMPANY during the performance of the contract, whether direct or indirect, and whether to any person or property to which the DEPARTMENT or said parties may be subject, except that neither the COMPANY nor any of its sub-contractors will be liable under this section for damages arising out of injury or damage to persons or property directly caused or resulting from the sole negligence of the DEPARTMENT or any of its officers, agents, or employees.~~

24. COMPANY shall:

1. utilize the U.S. Department of Homeland Security's E-Verify system to verify the employment eligibility of all new employees hired by the COMPANY during the term of the contract; and

2. expressly require any subcontractors performing work or providing services pursuant to the state contract to likewise utilize the U.S. Department of Homeland Security's E-Verify system to verify the employment eligibility of all new employees hired by the subcontractor during the contract term.

25. It is understood and agreed by the parties to this Agreement that if any part, term, or provision of this Agreement is held illegal by the courts or in conflict with any law of the State of Florida, the validity of the remaining portions or provisions shall not be affected, and the rights and obligations of the parties shall be construed and enforced as if the Agreement did not contain the particular part, term, or provision held to be invalid.

26. Any questions or matters arising under this Agreement as to validity, construction, enforcement, performance, or otherwise, shall be determined in accordance with the laws of the State of Florida. Venue for any action arising out of or in any way related to this Agreement shall lie exclusively in a state court of appropriate jurisdiction in Leon County, Florida.

27. The parties agree to bear their own attorney's fees and costs with respect to this Agreement.

28. The parties agree that this Agreement is binding on the parties, their heirs-at-law, and their assigns and successors in interest as evidenced by their signatures and lawful executions below.

29. A modification or waiver of any of the provisions of this Agreement shall be effective only if made in writing and executed with the same formality as this Agreement.

30. All terms and conditions in the License Agreement dated 06/21/1994 between the Florida East Coast Railway Company and Metro-Dade County Aviation Department are hereby reaffirmed except where supplemented, changed, or amended by this RAILROAD REIMBURSEABLE AGREEMENT, especially the Annual Signal Maintenance of the devices shall be replaced by paragraph 2 of this agreement.

Paragraph 30 added prior to the execution by the parties hereto.

Paragraph 23 was stricken, prior to execution by all parties, at the request of Florida East Coast Railway, LLC.

IN WITNESS WHEREOF, the parties hereto have caused these presents to be executed by their duly authorized officers, the day and year first above written.

STATE OF FLORIDA
DEPARTMENT OF TRANSPORTATION

BY: _____
(TITLE: _____)

COMPANY: Florida East Coast Railway, LLC

BY: _____
A.G. Fowler Jr. - Chief Engineer Signals and Communications

_____ COUNTY, FLORIDA

BY: _____
(TITLE: _____)

Legal Review	Approved as to Funds Available	Approved as to FAPG Requirements
BY: _____	BY: _____	BY: _____
Attorney - DOT Date	Comptroller - DOT Date	FHWA Date

Florida East Coast RAILWAY, L.L.C.

2013 Diagnostics

DATE: 09/12/12
TYPE: 3
CLASS: 3
NO. OF DAYS: 4
AAR / DOT #: 272788G
MILE POST: LR 11 + 480'
Project Type: FDOT

OFFICE OF THE ASSISTANT CHIEF ENGINEER
OF SIGNALS AND COMMUNICATIONS

ESTIMATED COST FOR HIGHWAY CROSSING WARNING DEVICES AT NORTHWEST 16TH STREET.
This estimate should be considered void after one (1) year.

MATERIAL	UNIT COST	UNITS	TOTAL COST
12" LED LIGHT COMPLETE	$250.00	12 EA.	$3,000.00
HXP-3R CONSTANT WARNING TIME (CWT)	$19,479.00	1 EA.	$19,479.00
GENERATOR CASE W/ TRANSFER SWITCH	$5,615.00	1 EA.	$5,615.00
MISC. GROUND MATERIAL	$1,021.40	1 PKG.	$1,021.40
MONITORING EQUIPMENT	$10,725.00	1 PKG.	$10,725.00
SANITATION & DISPOSAL	$1,500.00	1 PKG.	$1,500.00
FREIGHT & HANDLING			$9,960.00
TAX @ 6.5%			$2,590.00
TOTAL MATERIALS			**$53,890.40**
EXCAVATING EQUIPMENT PER DAY	$417.10	4 DAYS	$1,668.40
EQUIPMENT RENTAL PER DAY	$200.00	4 DAYS	$800.00
FOREMAN'S TRUCK PER DAY	$224.70	4 DAYS	$898.80
GANG TRUCK PER DAY	$647.30	4 DAYS	$2,589.20
SUPERVISORS TRUCK PER DAY	$142.60	4 DAYS	$570.40
EQUIPMENT TOTAL			**$6,527.00**
DESIGN ENGINEERING	$7,500.00	1	$7,500.00
CONTRACT ENGINEERING	$12,650.00	1	$12,650.00
CONSTRUCTION ENGINEERING INSPECTION	$1,350.00	3 DAYS	$4,050.00
ENGINEERING TOTAL			**$24,200.00**
CONSTRUCTION SUPERVISION	$375.00	4 DAYS	$1,500.00
LABOR ADDITIVE			$866.00
TOTAL SUPERVISION LABOR			**$2,366.00**
LABOR PER DAY	$1,392.40		$5,570.00
NUMBER OF DAYS	4		
LABOR ADDITIVE			$3,275.00
TOTAL GANG LABOR			**$8,845.00**
GANG EXPENSES PER DAY	$803.00		
NUMBER OF DAYS	4		
TOTAL GANG EXPENSES			**$3,212.00**
ESTIMATED FLAGGING TOTAL	$1,000.00	4 DAYS	**$4,000.00**
SUB-TOTAL			**$103,040.40**
CONTINGENCIES 5%			$5,152.00
TOTAL			**$108,190.00**

ESTIMATE NOTES:

SCHEDULE OF ANNUAL COST OF AUTOMATIC HIGHWAY GRADE CROSSING TRAFFIC CONTROL DEVICES

STANDARD 2 QUADRANT SIGNAL INSTALLATIONS

Annual Maintenance Cost Exclusive of Installation

CLASS	DESCRIPTION	COST*
I	Flashing Signals – One Track	$2,256.00
II	Flashing Signals – Multiple Tracks	$2,985.00
III	Flashing Signals and Gates – One Track	$3,402.00
IV	Flashing Signals and Gates – Multiple Tracks	$4,272.00

3 OR 4 QUADRANT SIGNAL INSTALLATIONS

Annual Maintenance Cost Exclusive of Installation

CLASS	DESCRIPTION	COST*
III	Flashing Signals and Gates – One Track	$6,726.00
IV	Flashing Signals and Gates – Multiple Tracks	$8,442.00

AUTHORITY: FLORIDA ADMINISTRATIVE RULE: 14-57.011
Public Railroad- Highway Grade Crossing Costs

F. A. RULE EFFECTIVE DATE: July 22, 1982

GENERAL AUTHORITY: 334.044, F. S.

SPECIFIC LAW IMPLEMENTED: 335.141, F. S.

*This schedule was effective July 1, 2011, and will be reviewed every 5 years and revised as appropriate based on the Consumer Price Index for all Urban Consumers published by the U.S. Department of Labor.

FLORIDA DEPARTMENT OF TRANSPORTATION

Listed Below are signal installations by type and class:

FLASHING SIGNALS - ONE TRACK
Type = 1, Class = 1

FLASHING SIGNALS - MULTIPLE TRACKS
Type = 1, Class = 2

FLASHING SIGNALS AND CANTILEVER - ONE TRACK
Type = 2, Class = 1

FLASHING SIGNALS AND CANTILEVERS - MULTIPLE TRACKS
Type = 2, Class = 2

FLASHING SIGNALS AND GATE - ONE TRACK
Type = 3, Class = 3

FLASHING SIGNALS AND GATE - MULTIPLE TRACKS
Type = 3, Class = 4

FLASHING SIGNALS AND GATE WITH CANTILEVER - ONE TRACK
Type = 4, Class = 3

FLASHING SIGNALS AND GATE WITH CANTILEVER - MULTIPLE TRACKS
Type = 4, Class = 4

TYPE OF TRAFFIC CONTROL DEVICES

I Flashing signals
II Flashing signals with cantilevers
III Flashing signals with gate
IV Flashing signals with cantilevers & gate

CLASS OF TRAFFIC CONTROL DEVICES

I Flashing signals - one track
II Flashing signals - multiple track
III Flashing signals & gates - one track
IV Flashing signals & gates - multiple track

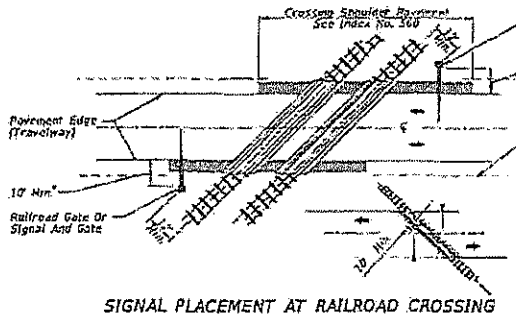

SIGNAL PLACEMENT AT RAILROAD CROSSING
(2 - LANE DESIGN)

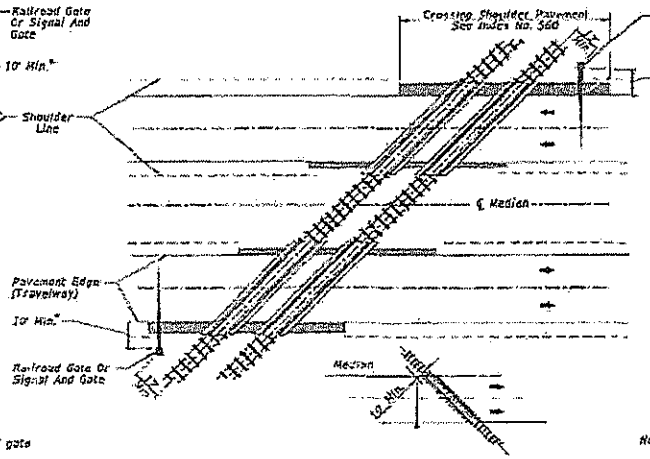

SIGNAL PLACEMENT AT RAILROAD CROSSING
(4 - LANE DESIGN)

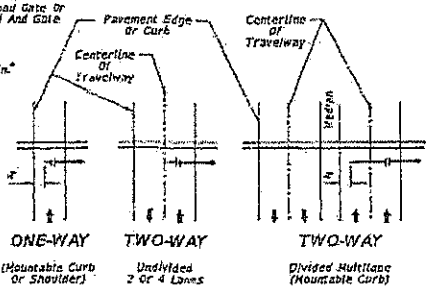

Note:
Arrows denote direction of travel not pavement markings.

FIGURE 1

Gate Length Requirements
See Note 5 Sheet 3

General Notes

1. No guardrail is proposed for signals; however, some form of impact attenuation device may be specified for certain locations.
2. Advance flasher to be installed when and if called for in plans or specifications.
3. Top of foundation shall be no higher than 4" above finished shoulder grade
4. Type of traffic control device
   I Flashing signals
   II Flashing signals with cantilever
   III Flashing signals with gate
   IV Flashing signals with crossbuck and gate
   V Gate
5. Class of traffic control devices
   I Flashing signals-one track
   II Flashing signals-multiple tracks
   III Automatic signals and gates-one track
   IV Flashing signals and gates-multiple tracks

Note:
Two separate foundations may be required (one for signals, one for gate), depending on type of equipment used.

* When 10' is deemed impractical the control device can be located as close as 2' from the edge of a paved shoulder but not less than 6' from the edge of the near traffic lane

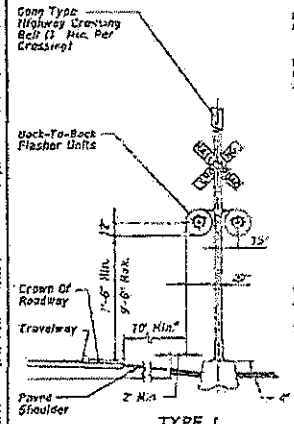

TYPE I

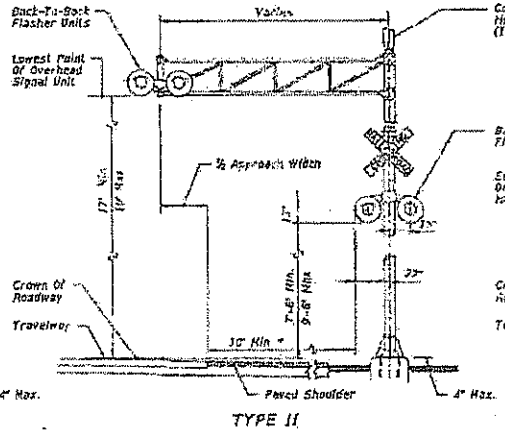

TYPE II

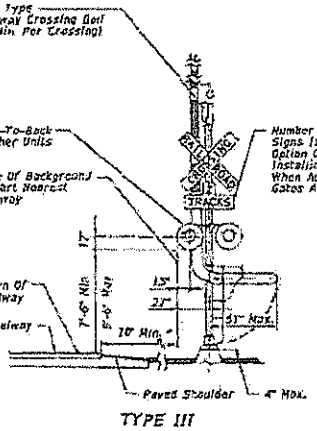

TYPE III

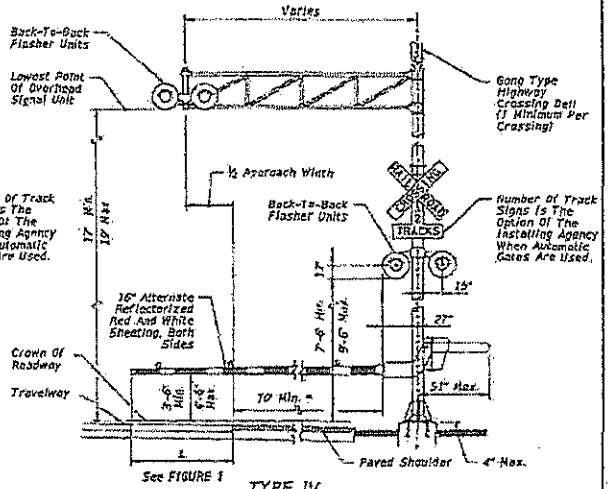

TYPE IV

LAST REVISION	DESCRIPTION:		FDOT DESIGN STANDARDS 2013	RAILROAD GRADE CROSSING TRAFFIC CONTROL DEVICES	INDEX NO.	SHEET NO.
01/01/11	REVISION				17882	1

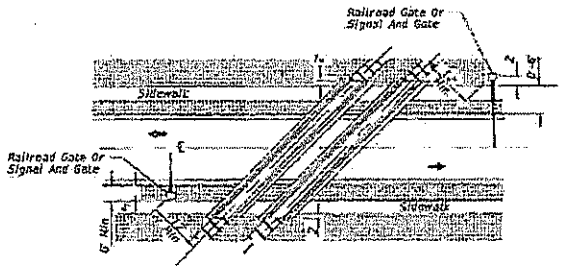

SIGNAL PLACEMENT AT RAILROAD CROSSING
(2 LANES, CURB & GUTTER)

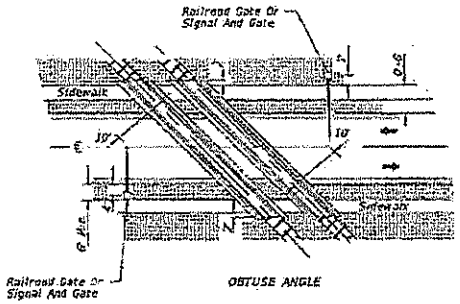

SIGNAL PLACEMENT AT RAILROAD CROSSING
(2 LANES, CURB & GUTTER)

GENERAL NOTES

1. The location of flashing signals and stop lines shall be established based on future (or present) installation of gate with appropriate track clearances.
2. Where plans call for railroad traffic control devices to be installed in curbed medians, the minimum median width shall be 12'-6".
3. Location of railroad traffic control device is based on the distance available between face of curb & sidewalk. 0' to 6' - Locate device outside sidewalk. Over 6' - Locate device between face of curb and sidewalk.
4. Stop line to be perpendicular to edge of roadway, approx. 15' from nearest rail; or 8' from and parallel to gate when present.
5. When a cantilevered-arm flashing-light signal is used, the minimum vertical clearance shall be 17' from above the Crown at Roadway to the Lowest Point of the Overhead Signal Unit.

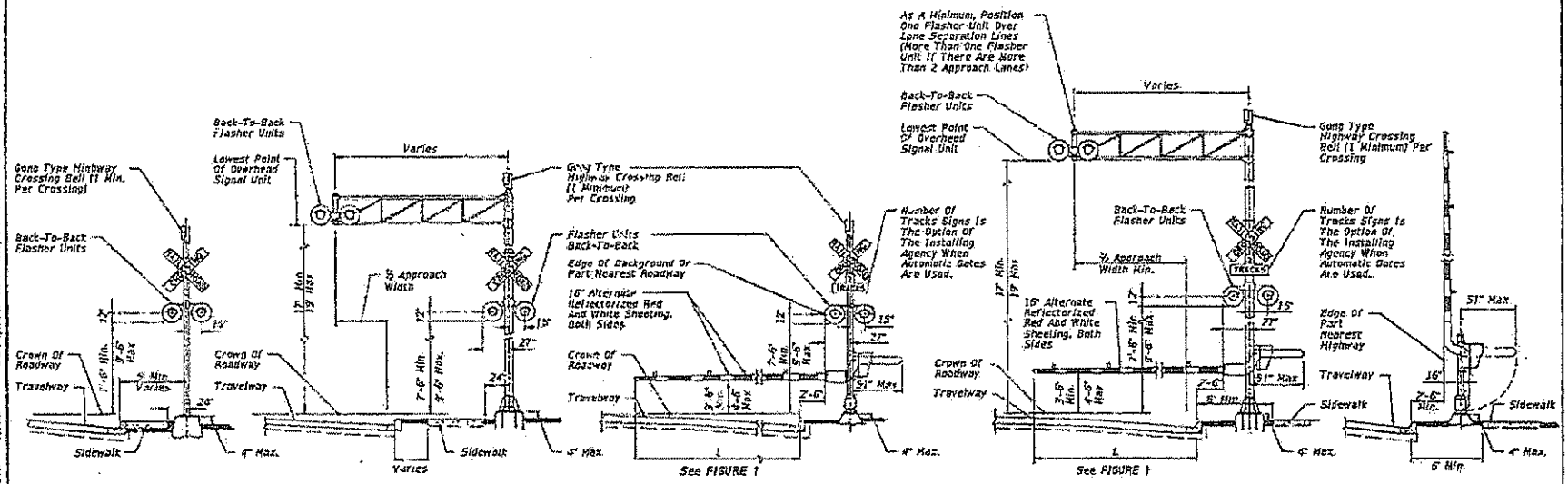

TYPE I TYPE II TYPE III TYPE IV TYPE V

LAST REVISION	DESCRIPTION:				
01/01/11		FDOT DESIGN STANDARDS 2013	RAILROAD GRADE CROSSING TRAFFIC CONTROL DEVICES	INDEX NO. 17882	SHEET NO. 2

RAILROAD CROSSING AT TWO (2)-LANE ROADWAY

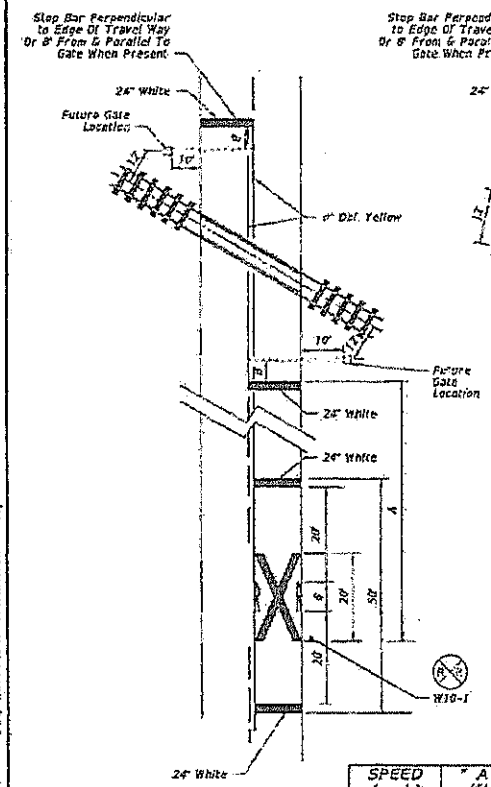

RAILROAD CROSSING AT MULTILANE ROADWAY

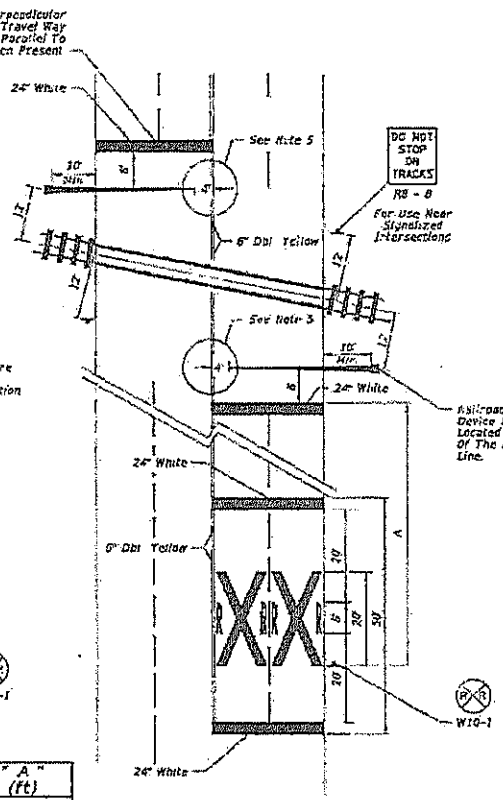

SPEED (mph)	"A" (ft)
60	400
55	335
50	250
45	175
40	125
35	100
URBAN	85 MIN.

RELATIVE LOCATION OF CROSSING TRAFFIC CONTROL DEVICES

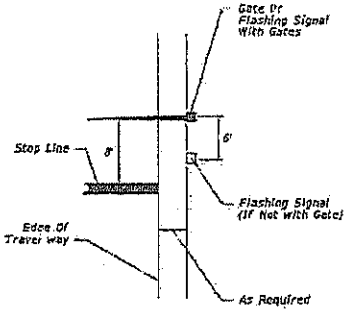

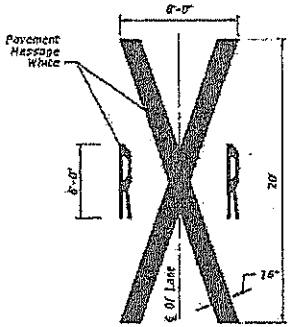

NOTES:

1. When computing pavement message, quantities do not include traverse lines.
2. Placement of sign W10-1 in a residential or business district, where low speeds are prevalent, the W10-1 sign may be placed a minimum distance of 100' from the crossing. Where street intersections occur between the RR pavement message and the tracks an additional W10-1 sign and additional pavement message should be used.
3. A portion of the pavement markings symbol should be directly opposite the W10-1 sign.
4. Recommended location for FTP-61-06 or FTP-62-06 signs, 100' urban and 300' rural. See Index 17355 for sign details.
5. Gate Length Requirements.
   For two-way undivided sections:
   The gate should extend to within 1' of the center line. On multiple approaches the maximum gate length may not reach to within 1' of the center line. For those cases, the distance from the gate to the center line shall be a maximum of 4'.

   For one-way or divided sections:
   The gate shall be of sufficient length such that the distance from the gate tip to the inside edge of pavement is a maximum of 4'.

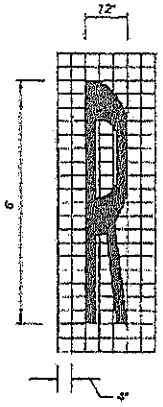

LAST REVISION	DESCRIPTION:	FDOT DESIGN STANDARDS 2013	RAILROAD GRADE CROSSING TRAFFIC CONTROL DEVICES	INDEX NO.	SHEET NO.
07/01/10				17882	3

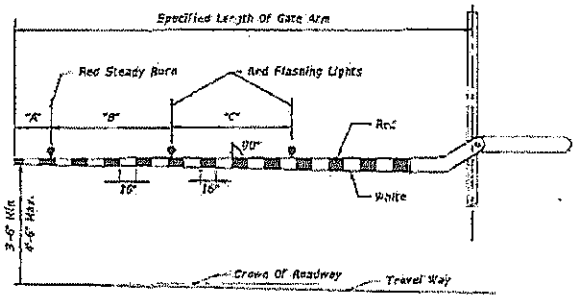

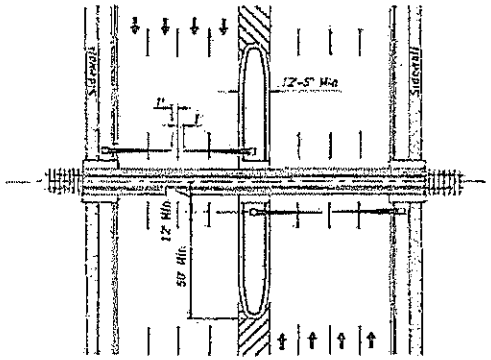

PLAN

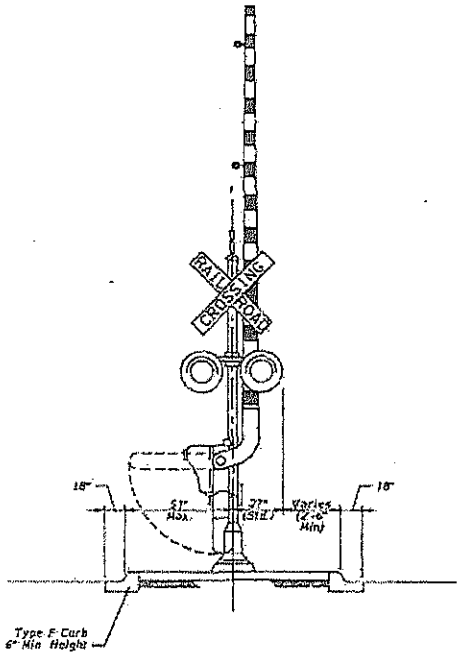

MEDIAN SECTION AT SIGNAL GATES

RAILROAD GATE ARM LIGHT SPACING

Specified Length Of Gate Arm	Dimension "A"	Dimension "B"	Dimension "C"
14 Ft.	6"	36"	5'
15 Ft.	18"	36"	5'
16-17 Ft.	24"	36"	5'
18-19 Ft.	28"	41"	5'
20-23 Ft	28"	4'	5'
24-28 Ft.	28"	5'	5'
29-31 Ft.	36"	6'	6'
32-34 Ft.	36"	7'	7'
35-37 Ft.	36"	9'	9'
38 And Over	36"	10'	10'

NOTE:
For additional information see the "Manual On Uniform Traffic Control Devices", Part 8; The "Traffic Control Handbook", Part VIII; and AASHTO "A Policy On Geometric Design Of Streets And Highways".

MEDIAN SIGNAL GATES FOR

MULTILANE UNDIVIDED URBAN SECTIONS

(THREE OR MORE DRIVING LANES IN ONE DIRECTION, 45 MPH OR LESS)

LAST REVISION	DESCRIPTION:	FDOT DESIGN STANDARDS 2013	RAILROAD GRADE CROSSING TRAFFIC CONTROL DEVICES	INDEX NO.	SHEET NO.
01/01/12				17882	4