PROJECT CONTROL POINTS

TRAVERSING THRU SECTIONS 2, 11, 14, 23, 26, AND 35 TOWNSHIP 54 SOUTH, RANGE 40 EAST

℄ STATION FROM STA. 80+00.00 TO STA. 379+12.48

N.A.V.D. 88

NOT TO SCALE

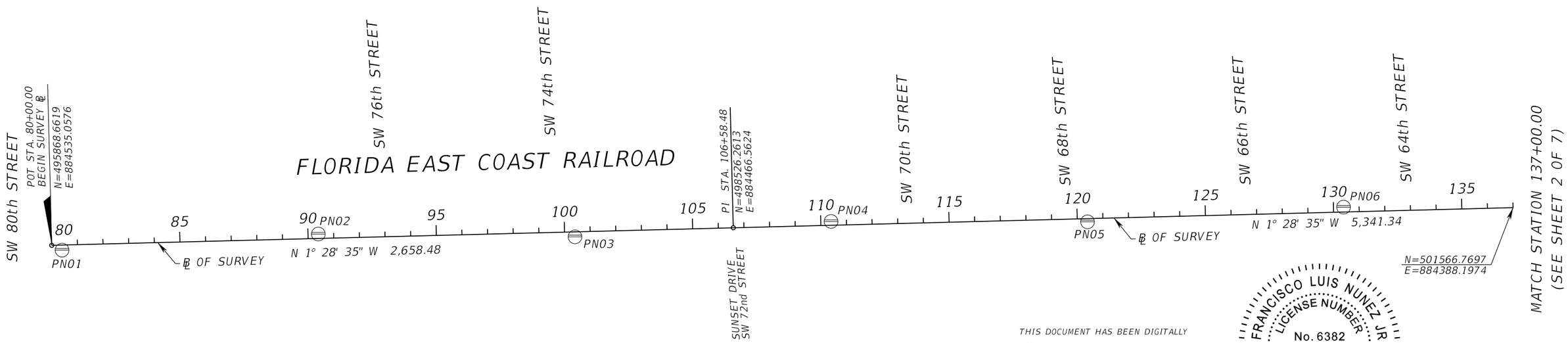

THIS DOCUMENT HAS BEEN DIGITALLY SIGNED AND SEALED BY:

FRANCISCO LUIS NUNEZ JR
LICENSE NUMBER
No. 6382
STATE OF FLORIDA
PROFESSIONAL SURVEYOR & MAPPER

LEGEND:

FDOT	= FLORIDA DEPARTMENT OF TRANSPORTATION
S.R.	= STATE ROAD
	= STAMPED DISC IN CONCRETE
	= MAG NAIL W/DISC STAMPED
LT	= LEFT
RT	= RIGHT
PC	= POINT OF CURVATURE
PI	= POINT OF INTERSECTION
POT	= POINT ON TANGENT
PT	= POINT OF TANGENCY
STA	= STATION
N.A.V.D.	= NORTH AMERICAN VERTICAL DATUM
N	= NORTHING
E	= EASTING
℄	= BASELINE
Δ	= CENTRAL ANGLE
D	= DEGREE OF CURVE
T	= TANGENT
L	= LENGTH
R	= RADIUS

BEARINGS, COORDINATES, GEOMETRY AND BASELINE STATIONING INFORMATION OBTAINED FROM A SPECIFIC PURPOSE SURVEY PREPARED FOR A RIGHT OF WAY CORRIDOR MAP FOR FLROIDA EAST COAST RAILROAD PREPARED BY LUDOVICI AND ORANGE.

BASELINE OF SURVEY WAS NOT STAKED IN THE FIELD.

BEARINGS AND COORDINATES ARE RELATIVE TO THE STATE PLANE COORDINATES, FLORIDA EAST ZONE, NORTH AMERICAN DATUM (NAD) OF 1983 ADJUSTMENT OF 1990
A BEARING OF N 03°35'45" W HAS BEEN ESTABLISHED BETWEEN MONUMENTS PN01 STAMPED "LUDLAM PN01" TO PN02 STAMPED "LUDLAM PN02"

VERTICAL DATUM N.A.V.D. 88
PROJECT UNITS U.S. SURVEY FEET
FIELD BOOK REFERENCES CHP-357, CHP-425, CHP-426, CHP-418, CHP-405 & CHP-428
ELECTRONIC DATABASE LUDLA.ZIP

PRINTED COPIES OF THIS DOCUMENT ARE NOT CONSIDERED SIGNED AND SEALED. THE SIGNATURE MUST BE VERIFIED ON THE ELECTRONIC DOCUMENTS.

C.H. PEREZ & ASSOCIATES CONSULTING ENGINEERS, INC.
9594 N.W. 41st STREET, SUITE 201 DORAL, FLORIDA 33178
CERTIFICATE OF AUTHORIZATION NO. EB-25976/LB-7360
PH: (305) 592-1078; FAX: (305) 592-1078
FRANCISCO L. NUNEZ, JR., P.S.M. NO.: 6382

LIMITS: FLORIDA EASTCOAST RAILROAD FROM SW 80th STREET TO NW 7th STREET IN MIAMI-DADE COUNTY, FLORIDA.

SURVEYOR'S CERTIFICATION
I HEREBY CERTIFY THIS SPECIFIC PURPOSE SURVEY WAS MADE FOR THE PURPOSE OF SURVEYING, REFERENCING, DESCRIBING AND MAPPING THE PROJECT CONTROL POINTS OR BASELINE FOR THE TRANSPORTATION FACILITY DEPICTED HEREON AND THAT SAID SURVEY WAS DONE UNDER MY RESPONSIBLE CHARGE AND MEETS THE STANDARDS OF PRACTICE SET FORTH BY THE FLORIDA BOARD OF PROFESSIONAL SURVEYORS AND MAPPERS IN CHAPTER 5J-17 FLORIDA ADMINISTRATIVE CODE PURSUANT TO SECTION 472.027 FLORIDA STATUTES. THIS MAP CONSISTING OF SHEET CTL-1 AND CTL-6 IS A TRUE, ACCURATE AND COMPLETE DEPICTION OF THE RESULTS OF A FIELD SURVEY PERFORMED UNDER MY DIRECTION AND COMPLETED ON SEPTEMBER 14th, 2018.

SURVEYOR FRANCISCO L. NUNEZ, JR. PSM NUMBER 6382

REVISIONS			
DATE	DESCRIPTION	DATE	DESCRIPTION

C H PEREZ & ASSOCIATES CONSULTING ENGINEERS, INC
CERTIFICATE OF AUTHORIZATION NO. EB-25976/LB-7360
9594 NW 41 STREET, SUITE 201
MIAMI, FLORIDA 33178

(305) 592-1070 FAX (305) 592-1078
FRANCISCO L. NUNEZ, JR., P.S.M.
P.S.M. LICENSE NO. 6382

STATE OF FLORIDA
DEPARTMENT OF TRANSPORTATION

ROAD NO.	COUNTY	FINANCIAL PROJECT ID
	MIAMI-DADE	

PROJECT CONTROL

SHEET NO.
CTL-1

$USER$ $DATE$ $TIME$ $FILE$

THE OFFICIAL RECORD OF THIS SHEET IS THE ELECTRONIC FILE DIGITALLY SIGNED AND SEALED UNDER RULE 5J-17.062, F.A.C.

PROJECT CONTROL POINTS

TRAVERSING THRU SECTIONS 2, 11, 14, 23, 26, AND 35 TOWNSHIP 54 SOUTH, RANGE 40 EAST

℄ STATION FROM STA. 80+00.00 TO STA. 379+12.48

N.A.V.D. 88

N NOT TO SCALE

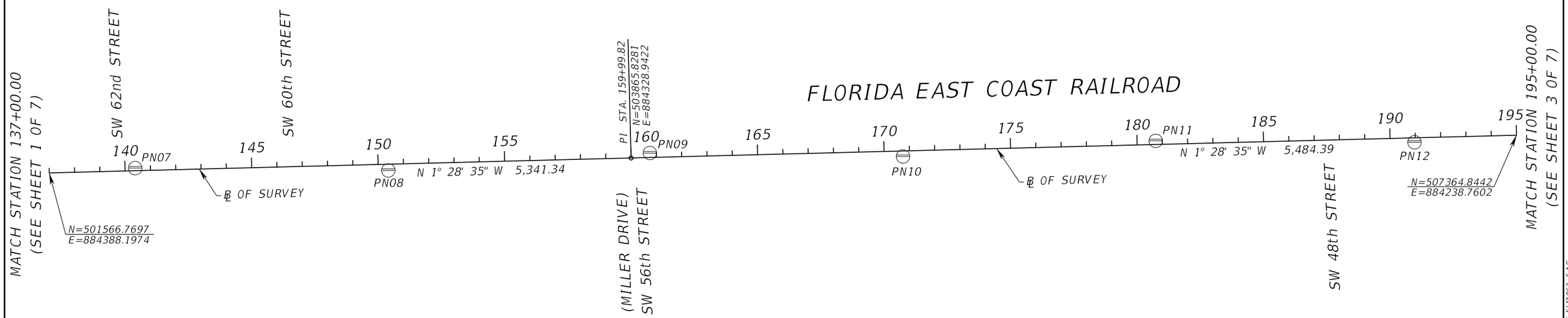

LEGEND:

FDOT	= FLORIDA DEPARTMENT OF TRANSPORTATION
S.R.	= STATE ROAD
	= STAMPED DISC IN CONCRETE
	= MAG NAIL W/DISC STAMPED
LT	= LEFT
RT	= RIGHT
PC	= POINT OF CURVATURE
PI	= POINT OF INTERSECTION
POT	= POINT ON TANGENT
PT	= POINT OF TANGENCY
STA	= STATION
N.A.V.D.	= NORTH AMERICAN VERTICAL DATUM
N	= NORTHING
E	= EASTING
℄	= BASELINE
Δ	= CENTRAL ANGLE
D	= DEGREE OF CURVE
T	= TANGENT
L	= LENGTH
R	= RADIUS

BEARINGS, COORDINATES, GEOMETRY AND BASELINE STATIONING INFORMATION OBTAINED FROM A SPECIFIC PURPOSE SURVEY PREPARED FOR A RIGHT OF WAY CORRIDOR MAP FOR FLORIDA EAST COAST RAILROAD PREPARED BY LUDOVICI AND ORANGE.

BASELINE OF SURVEY WAS NOT STAKED IN THE FIELD.

BEARINGS AND COORDINATES ARE RELATIVE TO THE STATE PLANE COORDINATES, FLORIDA EAST ZONE, NORTH AMERICAN DATUM (NAD) OF 1983 ADJUSTMENT OF 1990
A BEARING OF N 03°35'45" W HAS BEEN ESTABLISHED BETWEEN MONUMENTS PN01 STAMPED "LUDLAM PN01" TO PN02 STAMPED "LUDLAM PN02"

VERTICAL DATUM N.A.V.D. 88
PROJECT UNITS U.S. SURVEY FEET
FIELD BOOK REFERENCES CHP-357, CHP-425, CHP-426, CHP-418, CHP-405 & CHP-428
ELECTRONIC DATABASE LUDLA.ZIP

REVISIONS			
DATE	DESCRIPTION	DATE	DESCRIPTION

C H PEREZ & ASSOCIATES CONSULTING ENGINEERS, INC
CERTIFICATE OF AUTHORIZATION NO. EB-25976/LB-7360
9594 NW 41 STREET, SUITE 201
MIAMI, FLORIDA 33178

(305) 592-1070 FAX (305) 592-1078
FRANCISCO L. NUNEZ, JR., P.S.M.
P.S.M. LICENSE NO. 6382

STATE OF FLORIDA
DEPARTMENT OF TRANSPORTATION

ROAD NO.	COUNTY	FINANCIAL PROJECT ID
	MIAMI-DADE	

PROJECT CONTROL

SHEET NO.

CTL-2

$USERS $DATES $TIMES $FILES

THE OFFICIAL RECORD OF THIS SHEET IS THE ELECTRONIC FILE DIGITALLY SIGNED AND SEALED UNDER RULE 5J-17.062, F.A.C.

PROJECT CONTROL POINTS

TRAVERSING THRU SECTIONS 2, 11, 14, 23, 26, AND 35 TOWNSHIP 54 SOUTH, RANGE 40 EAST

℄ STATION FROM STA. 80+00.00 TO STA. 379+12.48

N.A.V.D. 88

N NOT TO SCALE

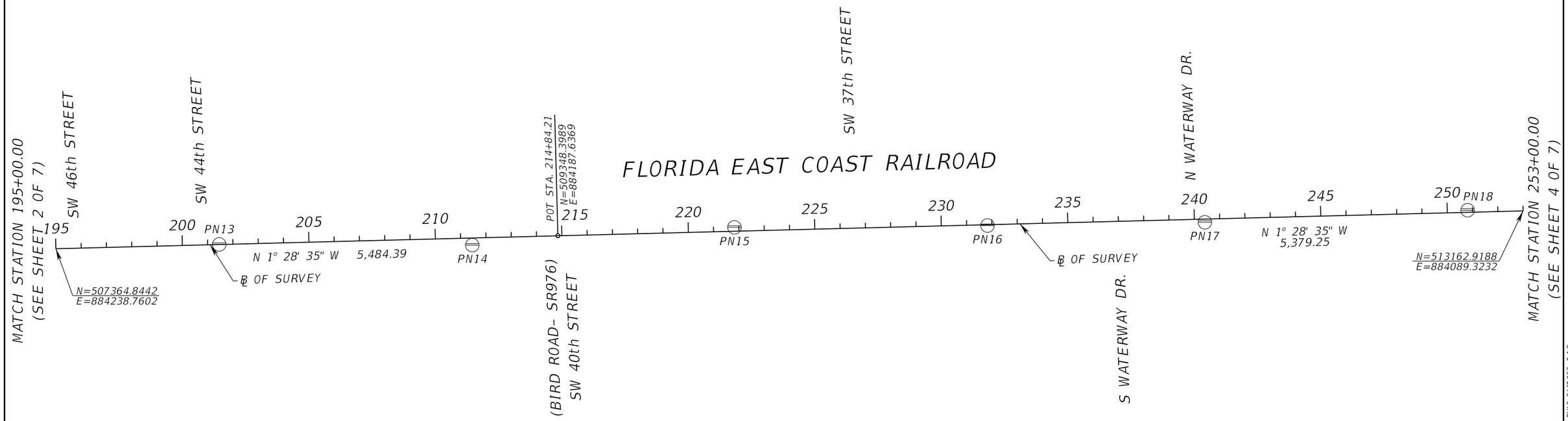

LEGEND:

FDOT	= FLORIDA DEPARTMENT OF TRANSPORTATION
S.R.	= STATE ROAD
	= STAMPED DISC IN CONCRETE
	= MAG NAIL W/DISC STAMPED
LT	= LEFT
RT	= RIGHT
PC	= POINT OF CURVATURE
PI	= POINT OF INTERSECTION
POT	= POINT ON TANGENT
PT	= POINT OF TANGENCY
STA	= STATION
N.A.V.D.	= NORTH AMERICAN VERTICAL DATUM
N	= NORTHING
E	= EASTING
℄	= BASELINE
Δ	= CENTRAL ANGLE
D	= DEGREE OF CURVE
T	= TANGENT
L	= LENGTH
R	= RADIUS

BEARINGS, COORDINATES, GEOMETRY AND BASELINE STATIONING INFORMATION OBTAINED FROM A SPECIFIC PURPOSE SURVEY PREPARED FOR A RIGHT OF WAY CORRIDOR MAP FOR FLORIDA EAST COAST RAILROAD PREPARED BY LUDOVICI AND ORANGE.

BASELINE OF SURVEY WAS NOT STAKED IN THE FIELD.

BEARINGS AND COORDINATES ARE RELATIVE TO THE STATE PLANE COORDINATES, FLORIDA EAST ZONE, NORTH AMERICAN DATUM (NAD) OF 1983 ADJUSTMENT OF 1990
A BEARING OF N 03°35'45" W HAS BEEN ESTABLISHED BETWEEN MONUMENTS PN01 STAMPED "LUDLAM PN01" TO PN02 STAMPED "LUDLAM PN02"

VERTICAL DATUM N.A.V.D. 88
PROJECT UNITS U.S. SURVEY FEET
FIELD BOOK REFERENCES CHP-357, CHP-425, CHP-426, CHP-418, CHP-405 & CHP-428
ELECTRONIC DATABASE LUDLA.ZIP

REVISIONS			
DATE	DESCRIPTION	DATE	DESCRIPTION

C H PEREZ & ASSOCIATES CONSULTING ENGINEERS, INC
CERTIFICATE OF AUTHORIZATION NO. EB-25976/LB-7360
9594 NW 41 STREET, SUITE 201
MIAMI, FLORIDA 33178

(305) 592-1070 FAX (305) 592-1078
FRANCISCO L. NUNEZ, JR., P.S.M.
P.S.M. LICENSE NO. 6382

STATE OF FLORIDA
DEPARTMENT OF TRANSPORTATION

ROAD NO.	COUNTY	FINANCIAL PROJECT ID
	MIAMI-DADE	

PROJECT CONTROL

SHEET NO.

CTL-3

$USER$ $DATE$ $TIME$ $FILE$

THE OFFICIAL RECORD OF THIS SHEET IS THE ELECTRONIC FILE DIGITALLY SIGNED AND SEALED UNDER RULE 5J-17.062, F.A.C.

PROJECT CONTROL POINTS

TRAVERSING THRU SECTIONS 2, 11, 14, 23, 26, AND 35 TOWNSHIP 54 SOUTH, RANGE 40 EAST

℄ STATION FROM STA. 80+00.00 TO STA. 379+12.48

N.A.V.D. 88

N NOT TO SCALE

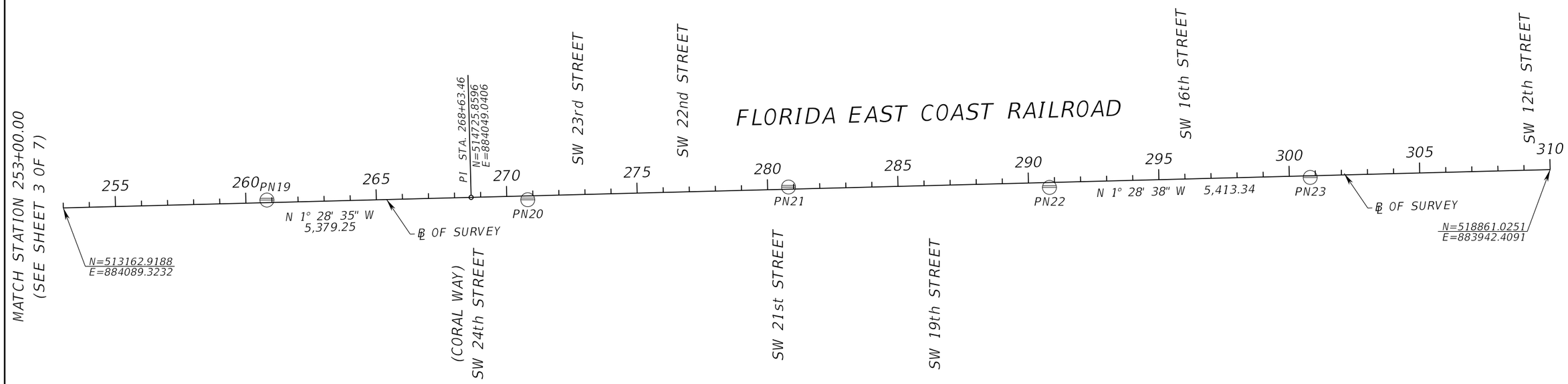

LEGEND:

FDOT	= FLORIDA DEPARTMENT OF TRANSPORTATION
S.R.	= STATE ROAD
⊖	= STAMPED DISC IN CONCRETE
△	= MAG NAIL W/DISC STAMPED
LT	= LEFT
RT	= RIGHT
PC	= POINT OF CURVATURE
PI	= POINT OF INTERSECTION
POT	= POINT ON TANGENT
PT	= POINT OF TANGENCY
STA	= STATION
N.A.V.D.	= NORTH AMERICAN VERTICAL DATUM
N	= NORTHING
E	= EASTING
℄	= BASELINE
Δ	= CENTRAL ANGLE
D	= DEGREE OF CURVE
T	= TANGENT
L	= LENGTH
R	= RADIUS

BEARINGS, COORDINATES, GEOMETRY AND BASELINE STATIONING INFORMATION OBTAINED FROM A SPECIFIC PURPOSE SURVEY PREPARED FOR A RIGHT OF WAY CORRIDOR MAP FOR FLORIDA EAST COAST RAILROAD PREPARED BY LUDOVICI AND ORANGE.

BASELINE OF SURVEY WAS NOT STAKED IN THE FIELD.

BEARINGS AND COORDINATES ARE RELATIVE TO THE STATE PLANE COORDINATES, FLORIDA EAST ZONE, NORTH AMERICAN DATUM (NAD) OF 1983 ADJUSTMENT OF 1990
A BEARING OF N 03°35'45" W HAS BEEN ESTABLISHED BETWEEN MONUMENTS PN01 STAMPED "LUDLAM PN01" TO PN02 STAMPED "LUDLAM PN02"

VERTICAL DATUM N.A.V.D. 88
PROJECT UNITS U.S. SURVEY FEET
FIELD BOOK REFERENCES CHP-357, CHP-425, CHP-426, CHP-418, CHP-405 & CHP-428
ELECTRONIC DATABASE LUDLA.ZIP

REVISIONS			
DATE	DESCRIPTION	DATE	DESCRIPTION

C H PEREZ & ASSOCIATES CONSULTING ENGINEERS, INC
CERTIFICATE OF AUTHORIZATION NO. EB-25976/LB-7360
9594 NW 41 STREET, SUITE 201
MIAMI, FLORIDA 33178

(305) 592-1070 FAX (305) 592-1078
FRANCISCO L. NUNEZ, JR., P.S.M.
P.S.M. LICENSE NO. 6382

STATE OF FLORIDA
DEPARTMENT OF TRANSPORTATION

ROAD NO.	COUNTY	FINANCIAL PROJECT ID
	MIAMI-DADE	

PROJECT CONTROL

SHEET NO.

CTL-4

$USER$ $DATE$ $TIME$ $FILE$

THE OFFICIAL RECORD OF THIS SHEET IS THE ELECTRONIC FILE DIGITALLY SIGNED AND SEALED UNDER RULE 5J-17.062, F.A.C.

PROJECT CONTROL POINTS

TRAVERSING THRU SECTIONS 2, 11, 14, 23, 26, AND 35 TOWNSHIP 54 SOUTH, RANGE 40 EAST

℄ STATION FROM STA. 80+00.00 TO STA. 379+12.48

N.A.V.D. 88

N NOT TO SCALE

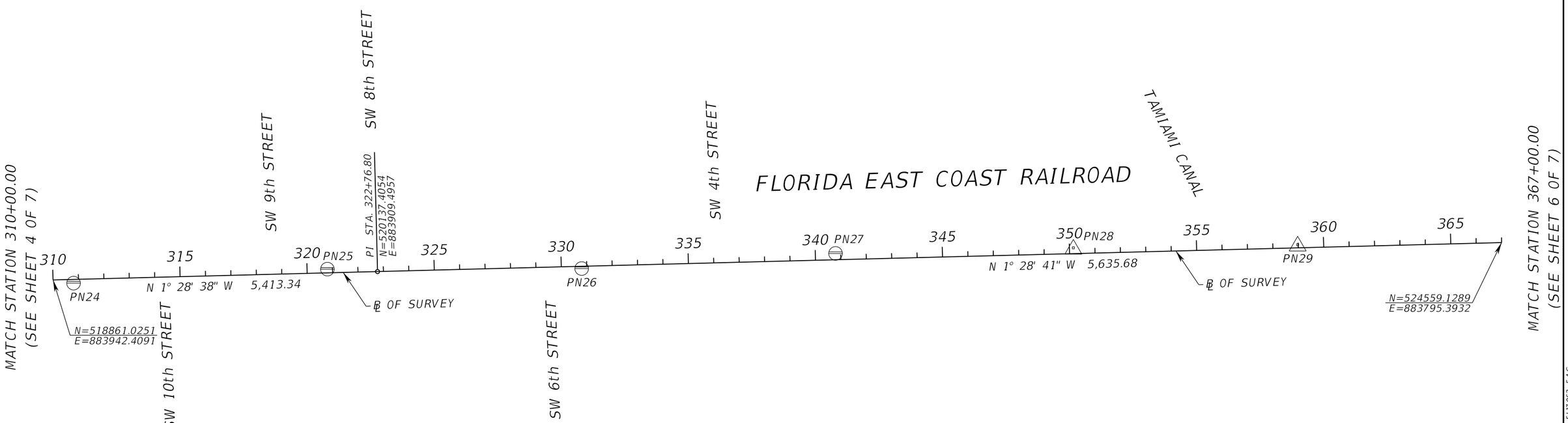

LEGEND:

FDOT	= FLORIDA DEPARTMENT OF TRANSPORTATION
S.R.	= STATE ROAD
	= STAMPED DISC IN CONCRETE
	= MAG NAIL W/DISC STAMPED
LT	= LEFT
RT	= RIGHT
PC	= POINT OF CURVATURE
PI	= POINT OF INTERSECTION
POT	= POINT ON TANGENT
PT	= POINT OF TANGENCY
STA	= STATION
N.A.V.D.	= NORTH AMERICAN VERTICAL DATUM
N	= NORTHING
E	= EASTING
℄	= BASELINE
Δ	= CENTRAL ANGLE
D	= DEGREE OF CURVE
T	= TANGENT
L	= LENGTH
R	= RADIUS

BEARINGS, COORDINATES, GEOMETRY AND BASELINE STATIONING INFORMATION OBTAINED FROM A SPECIFIC PURPOSE SURVEY PREPARED FOR A RIGHT OF WAY CORRIDOR MAP FOR FLORIDA EAST COAST RAILROAD PREPARED BY LUDOVICI AND ORANGE.

BASELINE OF SURVEY WAS NOT STAKED IN THE FIELD.

BEARINGS AND COORDINATES ARE RELATIVE TO THE STATE PLANE COORDINATES, FLORIDA EAST ZONE, NORTH AMERICAN DATUM (NAD) OF 1983 ADJUSTMENT OF 1990
A BEARING OF N 03°35'45" W HAS BEEN ESTABLISHED BETWEEN MONUMENTS PN01 STAMPED "LUDLAM PN01" TO PN02 STAMPED "LUDLAM PN02"

VERTICAL DATUM N.A.V.D. 88
PROJECT UNITS U.S. SURVEY FEET
FIELD BOOK REFERENCES CHP-357, CHP-425, CHP-426, CHP-418, CHP-405 & CHP-428
ELECTRONIC DATABASE LUDLA.ZIP

REVISIONS			
DATE	DESCRIPTION	DATE	DESCRIPTION

C H PEREZ & ASSOCIATES CONSULTING ENGINEERS, INC
CERTIFICATE OF AUTHORIZATION NO. EB-25976/LB-7360
9594 NW 41 STREET, SUITE 201
MIAMI, FLORIDA 33178

(305) 592-1070 FAX (305) 592-1078
FRANCISCO L. NUNEZ, JR., P.S.M.
P.S.M. LICENSE NO. 6382

STATE OF FLORIDA
DEPARTMENT OF TRANSPORTATION

ROAD NO.	COUNTY	FINANCIAL PROJECT ID
	MIAMI-DADE	

PROJECT CONTROL

SHEET NO.

CTL-5

$USER$ $DATE$ $TIME$ $FILE$

THE OFFICIAL RECORD OF THIS SHEET IS THE ELECTRONIC FILE DIGITALLY SIGNED AND SEALED UNDER RULE 5J-17.062, F.A.C.

PROJECT CONTROL POINTS

TRAVERSING THRU SECTIONS 2, 11, 14, 23, 26, AND 35 TOWNSHIP 54 SOUTH, RANGE 40 EAST

℄ STATION FROM STA. 80+00.00 TO STA. 379+12.48

N.A.V.D. 88

N NOT TO SCALE

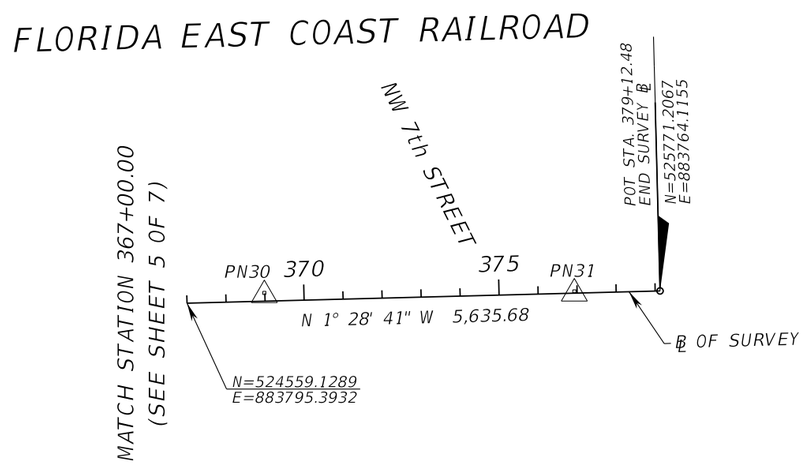

LEGEND:

FDOT	= FLORIDA DEPARTMENT OF TRANSPORTATION
S.R.	= STATE ROAD
	= STAMPED DISC IN CONCRETE
	= MAG NAIL W/DISC STAMPED
LT	= LEFT
RT	= RIGHT
PC	= POINT OF CURVATURE
PI	= POINT OF INTERSECTION
POT	= POINT ON TANGENT
PT	= POINT OF TANGENCY
STA	= STATION
N.A.V.D.	= NORTH AMERICAN VERTICAL DATUM
N	= NORTHING
E	= EASTING
℄	= BASELINE
Δ	= CENTRAL ANGLE
D	= DEGREE OF CURVE
T	= TANGENT
L	= LENGTH
R	= RADIUS

BEARINGS, COORDINATES, GEOMETRY AND BASELINE STATIONING INFORMATION OBTAINED FROM A SPECIFIC PURPOSE SURVEY PREPARED FOR A RIGHT OF WAY CORRIDOR MAP FOR FLORIDA EAST COAST RAILROAD PREPARED BY LUDOVICI AND ORANGE.

BASELINE OF SURVEY WAS NOT STAKED IN THE FIELD.

BEARINGS AND COORDINATES ARE RELATIVE TO THE STATE PLANE COORDINATES, FLORIDA EAST ZONE, NORTH AMERICAN DATUM (NAD) OF 1983 ADJUSTMENT OF 1990
A BEARING OF N 03°35'45" W HAS BEEN ESTABLISHED BETWEEN MONUMENTS PN01 STAMPED "LUDLAM PN01" TO PN02 STAMPED "LUDLAM PN02"

VERTICAL DATUM N.A.V.D. 88
PROJECT UNITS U.S. SURVEY FEET
FIELD BOOK REFERENCES CHP-357, CHP-425, CHP-426, CHP-418, CHP-405 & CHP-428
ELECTRONIC DATABASE LUDLA.ZIP

REVISIONS			
DATE	DESCRIPTION	DATE	DESCRIPTION

C H PEREZ & ASSOCIATES CONSULTING ENGINEERS, INC
CERTIFICATE OF AUTHORIZATION NO. EB-25976/LB-7360
9594 NW 41 STREET, SUITE 201
MIAMI, FLORIDA 33178

(305) 592-1070 FAX (305) 592-1078
FRANCISCO L. NUNEZ, JR., P.S.M.
P.S.M. LICENSE NO. 6382

STATE OF FLORIDA
DEPARTMENT OF TRANSPORTATION

ROAD NO.	COUNTY	FINANCIAL PROJECT ID
	MIAMI-DADE	

PROJECT CONTROL

SHEET NO.

CTL-6

$USERS $DATES $TIMES $FILES

THE OFFICIAL RECORD OF THIS SHEET IS THE ELECTRONIC FILE DIGITALLY SIGNED AND SEALED UNDER RULE 5J-17.062, F.A.C.

PROJECT CONTROL POINTS

N.A.V.D. 88

TRAVERSING THRU SECTIONS 2, 11, 14, 23, 26, and 35 TOWNSHIP 54 SOUTH, RANGE 40 EAST
℄ STATION FROM STA. 80+00.00 TO STA. 379+12.48

POINT NAME	(X) EASTING	(Y) NORTHING	SCALE FACTOR	LATITUDE	LONGITUDE	BASELINE STATION	OFFSET	(Z) ELEVATION	DESCRIPTION
STATION AND OFFSET FROM FLORIDA EAST COAST RAILROAD BASELINE									
PN01	884553.718	495908.880	1.00000099	25°41'46.66107"N	80°18'23.17228"W	80+39.72	19.69' RT	11.20'	SET FDOT ALUMINUM DISC IN CONCRETE STAMPED "LUDLAM PN01"
PN02	884490.920	496908.159	1.00000096	25°41'56.56180"N	80°18'23.80145"W	90+40.29	17.34' LT	9.62'	SET FDOT ALUMINUM DISC IN CONCRETE STAMPED "LUDLAM PN02"
PN03	884501.914	497908.947	1.00000096	25°42'6.47364"N	80°18'23.62385"W	100+40.46	19.43' RT	11.53'	SET FDOT ALUMINUM DISC IN CONCRETE STAMPED "LUDLAM PN03"
PN04	884441.994	498907.384	1.00000093	25°42'16.36587"N	80°18'24.22162"W	110+40.11	14.74' LT	10.92'	SET FDOT ALUMINUM DISC IN CONCRETE STAMPED "LUDLAM PN04"
PN05	884443.452	499907.376	1.00000093	25°42'26.2703"N	80°18'24.14829"W	120+39.73	12.48' RT	10.69'	SET FDOT ALUMINUM DISC IN CONCRETE STAMPED "LUDLAM PN05"
PN06	884386.202	500905.745	1.00000090	25°42'36.16173"N	80°18'24.71692"W	130+39.25	19.03' LT	11.75'	SET FDOT ALUMINUM DISC IN CONCRETE STAMPED "LUDLAM PN06"
PN07	884369.093	501906.354	1.00000089	25°42'46.07324"N	80°18'24.84655"W	140+39.96	10.35' LT	12.51'	SET FDOT ALUMINUM DISC IN CONCRETE STAMPED "LUDLAM PN07"
PN08	884378.138	502906.531	1.00000090	25°42'55.979119"N	80°18'24.69026"W	150+39.58	24.46' RT	14.58'	SET FDOT ALUMINUM DISC IN CONCRETE STAMPED "LUDLAM PN08"
PN09	884309.290	503940.282	1.00000086	25°43'6.22157"N	80°18'25.38369"W	160+74.76	17.73' LT	12.50'	SET FDOT ALUMINUM DISC IN CONCRETE STAMPED "LUDLAM PN09"
PN10	884323.070	504940.407	1.00000087	25°43'16.12667"N	80°18'25.17563"W	170+74.20	21.82' RT	8.30'	SET FDOT ALUMINUM DISC IN CONCRETE STAMPED "LUDLAM PN10"
PN11	884261.332	505939.136	1.00000084	25°43'26.02187"N	80°18'25.79336"W	180+74.18	14.17' LT	9.88'	SET FDOT ALUMINUM DISC IN CONCRETE STAMPED "LUDLAM PN11"
PN12	884266.756	506961.565	1.00000084	25°43'36.14831"N	80°18'25.67537"W	190+96.13	17.60' RT	8.29'	SET FDOT ALUMINUM DISC IN CONCRETE STAMPED "LUDLAM PN12"
PN13	884221.754	508010.21	1.00000082	25°43'46.53705"N	80°18'26.10726"W	201+45.59	00.37' LT	9.20'	SET FDOT ALUMINUM DISC IN CONCRETE STAMPED "LUDLAM PN13"
PN14	884224.521	509010.263	1.00000082	25°43'56.44197"N	80°18'26.01960"W	211+45.24	28.16' RT	5.37'	SET FDOT ALUMINUM DISC IN CONCRETE STAMPED "LUDLAM PN14"
PN15	884154.536	510046.170	1.00000078	25°44'6.70581"N	80°18'26.72543"W	221+82.61	15.11' LT	9.85'	SET FDOT ALUMINUM DISC IN CONCRETE STAMPED "LUDLAM PN15"
PN16	884147.328	511046.136	1.00000078	25°44'16.61041"N	80°18'26.74686"W	231+82.43	3.45' RT	13.61'	SET FDOT ALUMINUM DISC IN CONCRETE STAMPED "LUDLAM PN16"
PN17	884134.454	511905.132	1.00000077	25°44'25.11904"N	80°18'26.83834"W	240+41.47	12.71' RT	14.53'	SET FDOT ALUMINUM DISC IN CONCRETE STAMPED "LUDLAM PN17"
PN18	884086.798	512943.389	1.00000075	25°44'35.4049"N	80°18'27.29989"W	250+80.61	8.18' LT	11.39'	SET FDOT ALUMINUM DISC IN CONCRETE STAMPED "LUDLAM PN18"
PN19	884059.384	513943.248	1.00000073	25°44'45.30957"N	80°18'27.54230"W	260+80.84	9.82' LT	7.04'	SET FDOT ALUMINUM DISC IN CONCRETE STAMPED "LUDLAM PN19"
PN20	884058.083	514942.816	1.00000073	25°44'55.20990"N	80°18'27.49914"W	270+80.11	14.63' RT	6.04'	SET FDOT ALUMINUM DISC IN CONCRETE STAMPED "LUDLAM PN20"
PN21	884009.374	515942.191	1.00000071	25°45'5.11078"N	80°18'27.97449"W	280+80.41	8.30' LT	7.52'	SET FDOT ALUMINUM DISC IN CONCRETE STAMPED "LUDLAM PN21"
PN22	884010.829	516942.229	1.00000071	25°45'15.01562"N	80°18'27.90115"W	290+80.08	18.93' RT	6.05'	SET FDOT ALUMINUM DISC IN CONCRETE STAMPED "LUDLAM PN22"
PN23	883972.486	517941.553	1.00000069	25°45'24.91545"N	80°18'28.26314"W	300+80.06	6.36' RT	7.97'	SET FDOT ALUMINUM DISC IN CONCRETE STAMPED "LUDLAM PN23"
PN24	883954.949	518941.640	1.00000068	25°45'34.82175"N	80°18'28.39752"W	310+80.26	14.61' RT	8.54'	SET FDOT ALUMINUM DISC IN CONCRETE STAMPED "LUDLAM PN24"
PN25	883899.893	519940.234	1.00000065	25°45'44.71522"N	80°18'28.94237"W	320+79.95	14.68' LT	8.33'	SET FDOT ALUMINUM DISC IN CONCRETE STAMPED "LUDLAM PN25"
PN26	883897.551	520940.473	1.00000065	25°45'54.62223"N	80°18'28.91055"W	330+79.91	8.77' RT	7.94'	SET FDOT ALUMINUM DISC IN CONCRETE STAMPED "LUDLAM PN26"
PN27	883838.055	521939.061	1.00000062	25°46'4.51585"N	80°18'29.50399"W	340+79.70	24.94' LT	5.72'	SET FDOT ALUMINUM DISC IN CONCRETE STAMPED "LUDLAM PN27"
PN28	883816.020	522874.560	1.00000060	25°46'13.78267"N	80°18'29.69130"W	350+15.46	22.83' LT	9.79'	SET 5/8" REBAR STAMPED "LB 7360"
PN29	883803.720	523756.924	1.00000060	25°46'22.52269"N	80°18'29.77518"W	358+97.85	12.34' LT	9.63'	SET 5/8" REBAR STAMPED "LB 7360"
PN30	883769.151	524757.152	1.00000058	25°46'32.43124"N	80°18'30.09590"W	368+98.63	21.12' LT	5.79'	SET 5/8" REBAR STAMPED "LB 7360"
PN31	883765.038	525551.714	1.00000058	25°46'40.30121"N	80°18'30.09525"W	376+93.04	4.74' LT	6.58'	SET 5/8" REBAR STAMPED "LB 7360"

NOTE:

THE OFFICIAL RECORD OF THIS SHEET IS THE ELECTRONIC FILE DIGITALLY SIGNED AND SEALED UNDER RULE 5J-17.062, F.A.C.

REVISIONS

DATE	DESCRIPTION	DATE	DESCRIPTION

C H PEREZ & ASSOCIATES CONSULTING ENGINEERS, INC
CERTIFICATE OF AUTHORIZATION NO. EB-25976/LB-7360
9594 NW 41 STREET, SUITE 201
MIAMI, FLORIDA 33178

(305) 592-1070 FAX (305) 592-1078
FRANCISCO L. NUNEZ, JR., P.S.M.
P.S.M. LICENSE NO. 6382

STATE OF FLORIDA
DEPARTMENT OF TRANSPORTATION

ROAD NO.	COUNTY	FINANCIAL PROJECT ID
	MIAMI-DADE	

PROJECT CONTROL

SHEET NO.
CTL-7

$USER$ $DATE$ $TIME$ $FILE$

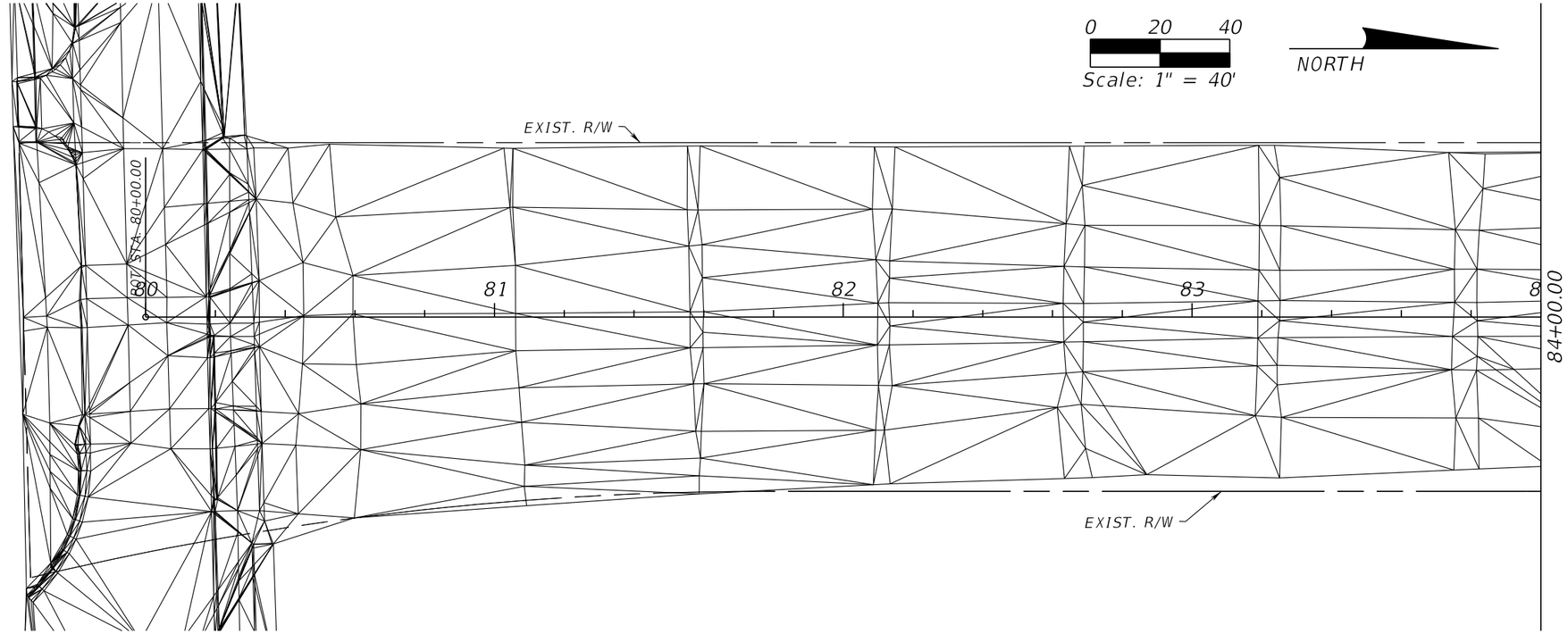

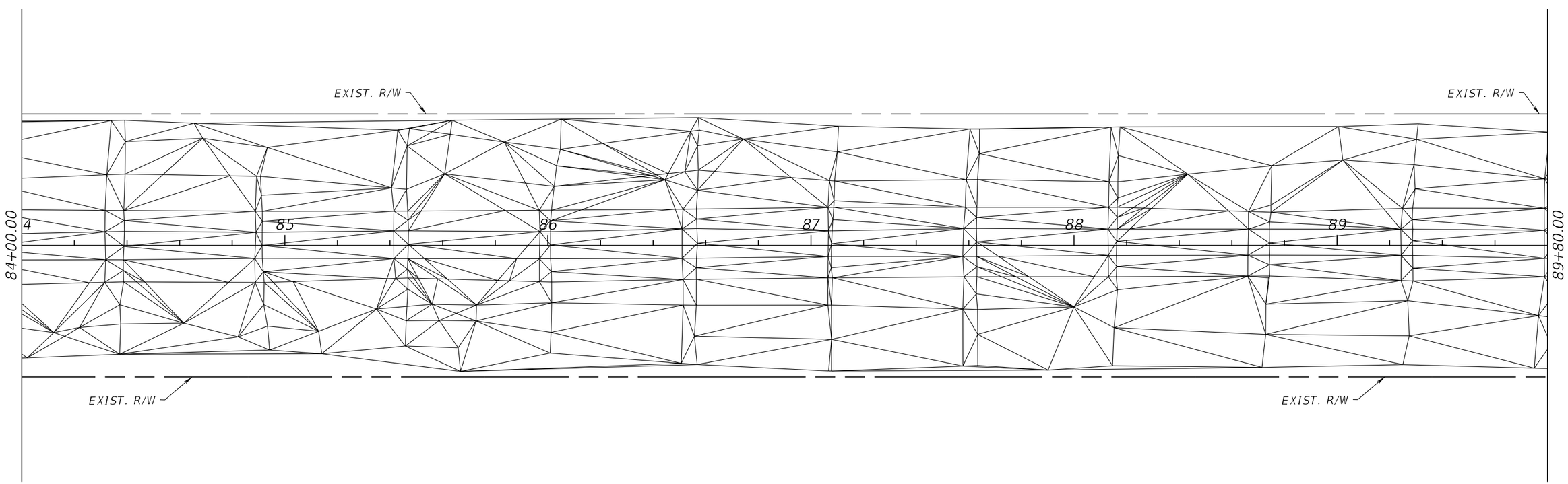

REVISIONS			
DATE	DESCRIPTION	DATE	DESCRIPTION

MAPS PREPARED BY:
CH PEREZ & ASSOCIATES CONSULTING ENGINEERS, INC
CERTIFICATE OF AUTHORIZATION NO. EB-25976 / LB-7360
9594 NW 41 STREET, SUITE 201
MIAMI, FLORIDA 33178
(305)592-1070 / FAX: (305)592-1078
FRANK L. NUNEZ, JR., PSM
P.S.M. LICENSE NO. 6382

LUDLAM TRAIL CORRIDOR PD&E STUDY

Miami-Dade County Parks, Recreation, and Open Spaces (MDPROS)	Hickman Building 275 NW 2nd Street Miami, FL 33128 305-755-7800	P&R CONTRACT NO. RFQ 786B P&R PROJECT NO. 43502-15-001-14470619

DTM

SHEET NO. 01

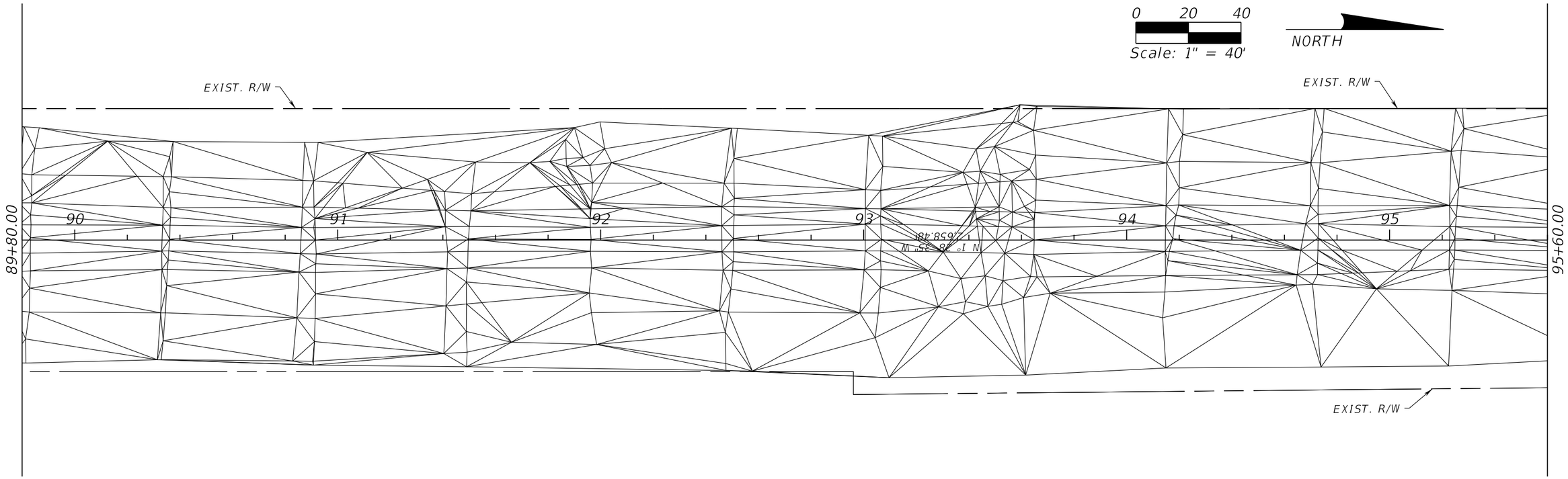

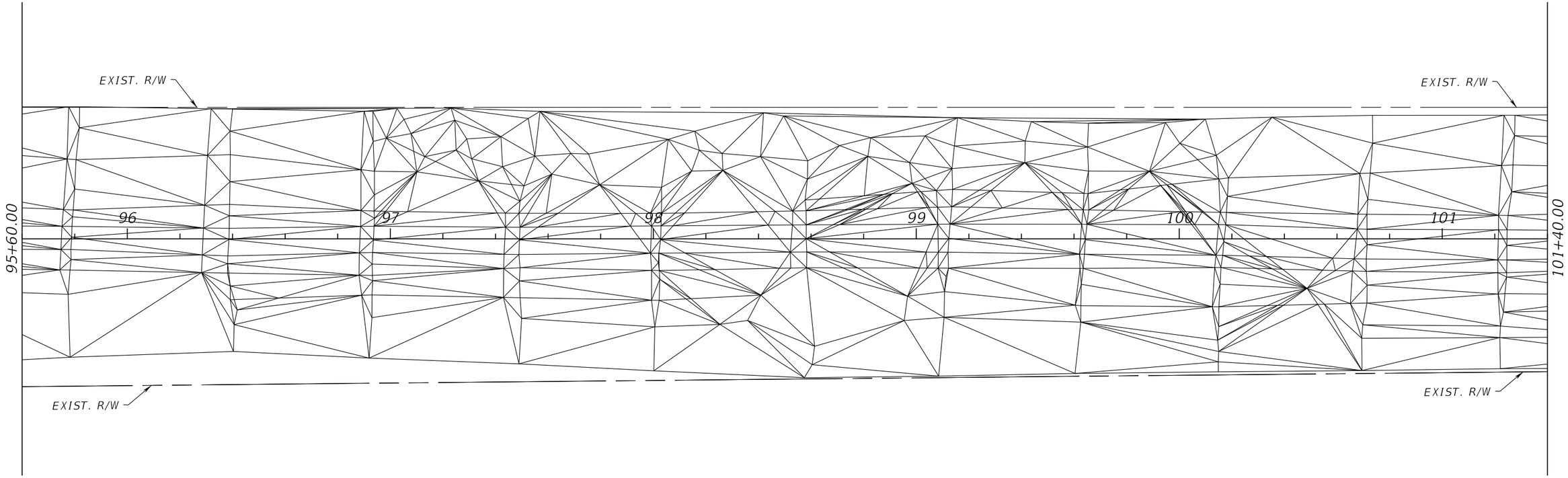

REVISIONS			
DATE	DESCRIPTION	DATE	DESCRIPTION

MAPS PREPARED BY:
CH PEREZ & ASSOCIATES CONSULTING ENGINEERS, INC
CERTIFICATE OF AUTHORIZATION NO. EB-25976 / LB-7360
9594 NW 41 STREET, SUITE 201
MIAMI, FLORIDA 33178
(305)592-1070 / FAX: (305)592-1078
FRANK L. NUNEZ, JR., PSM
P.S.M. LICENSE NO. 6382

LUDLAM TRAIL CORRIDOR PD&E STUDY

Miami-Dade County Parks, Recreation, and Open Spaces (MDPROS)	Hickman Building 275 NW 2nd Street Miami, FL 33128 305-755-7800	P&R CONTRACT NO. RFQ 786B
		P&R PROJECT NO. 43502-15-001-14470619

DTM

SHEET NO. 02

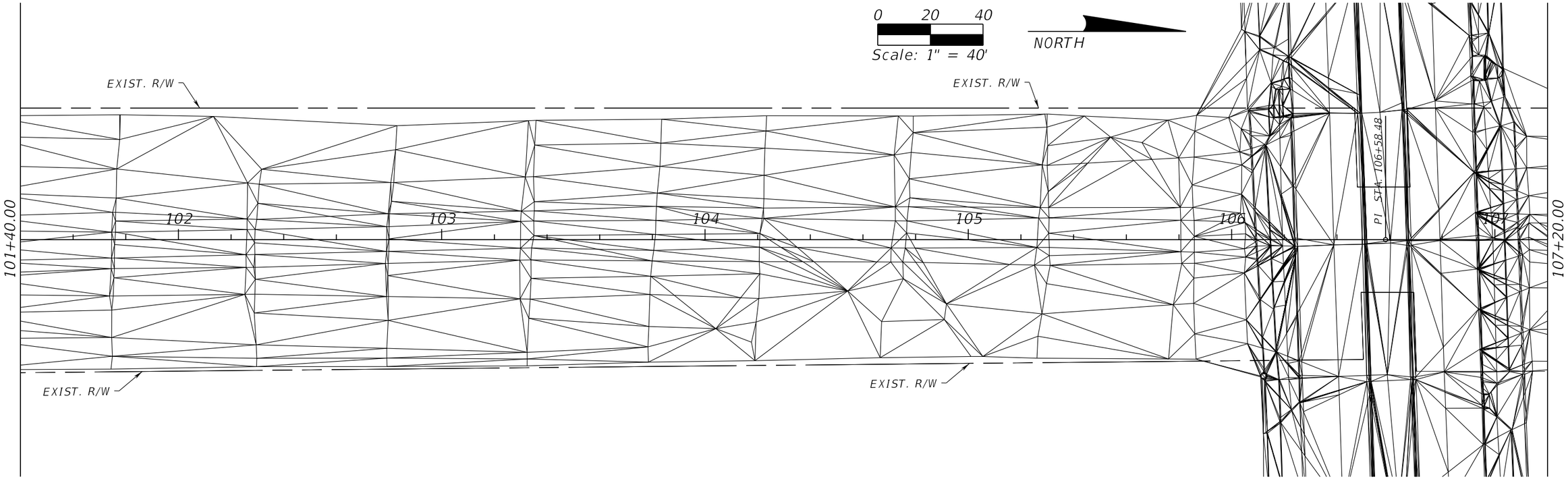

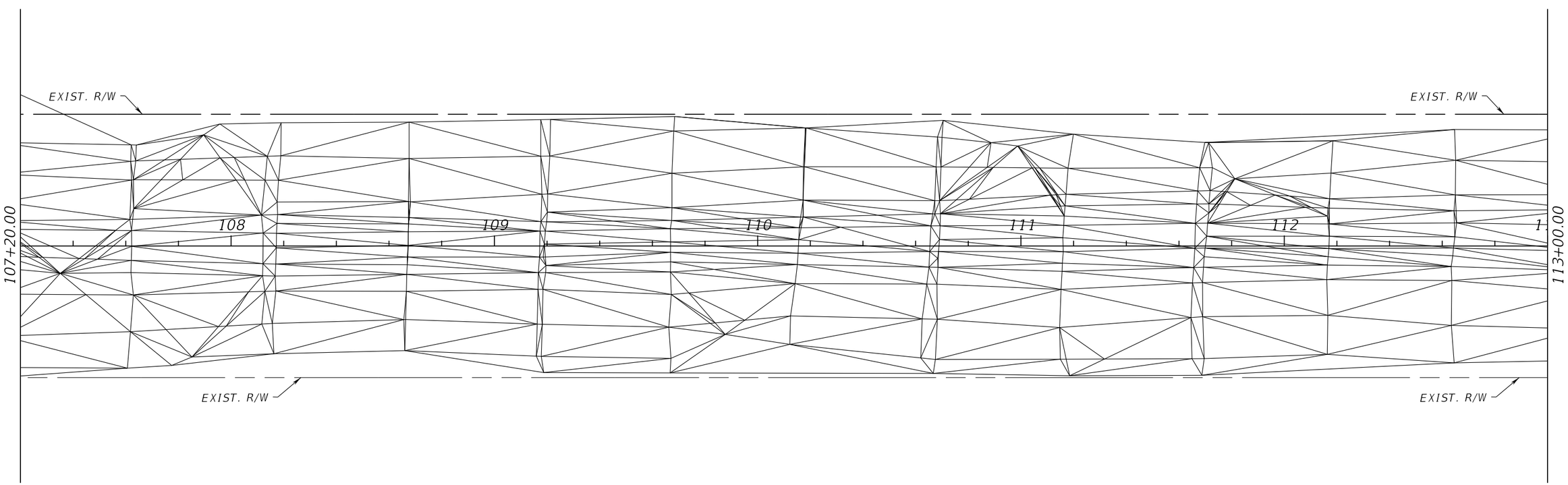

REVISIONS			
DATE	DESCRIPTION	DATE	DESCRIPTION

MAPS PREPARED BY:
CH PEREZ & ASSOCIATES CONSULTING ENGINEERS, INC
CERTIFICATE OF AUTHORIZATION NO. EB-25976 / LB-7360
9594 NW 41 STREET, SUITE 201
MIAMI, FLORIDA 33178
(305)592-1070 / FAX: (305)592-1078
FRANK L. NUNEZ, JR., PSM
P.S.M. LICENSE NO. 6382

LUDLAM TRAIL CORRIDOR PD&E STUDY

Miami-Dade County Parks, Recreation, and Open Spaces (MDPROS)	Hickman Building 275 NW 2nd Street Miami, FL 33128 305-755-7800	P&R CONTRACT NO. RFQ 786B P&R PROJECT NO. 43502-15-001-14470619

DTM

SHEET NO. 03

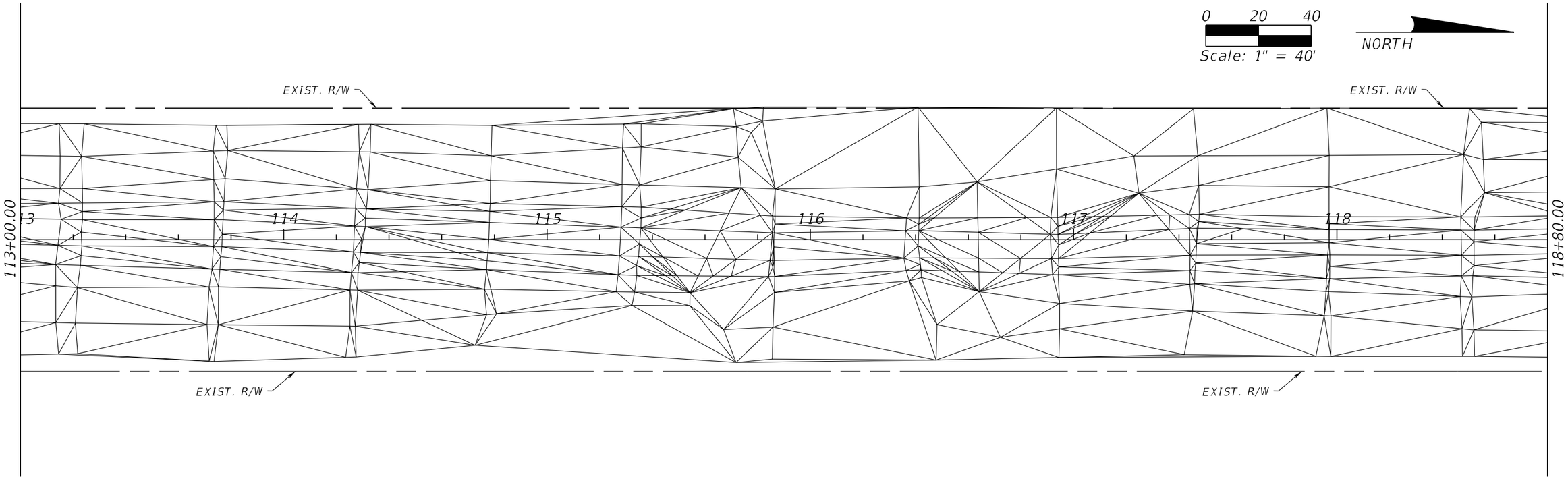

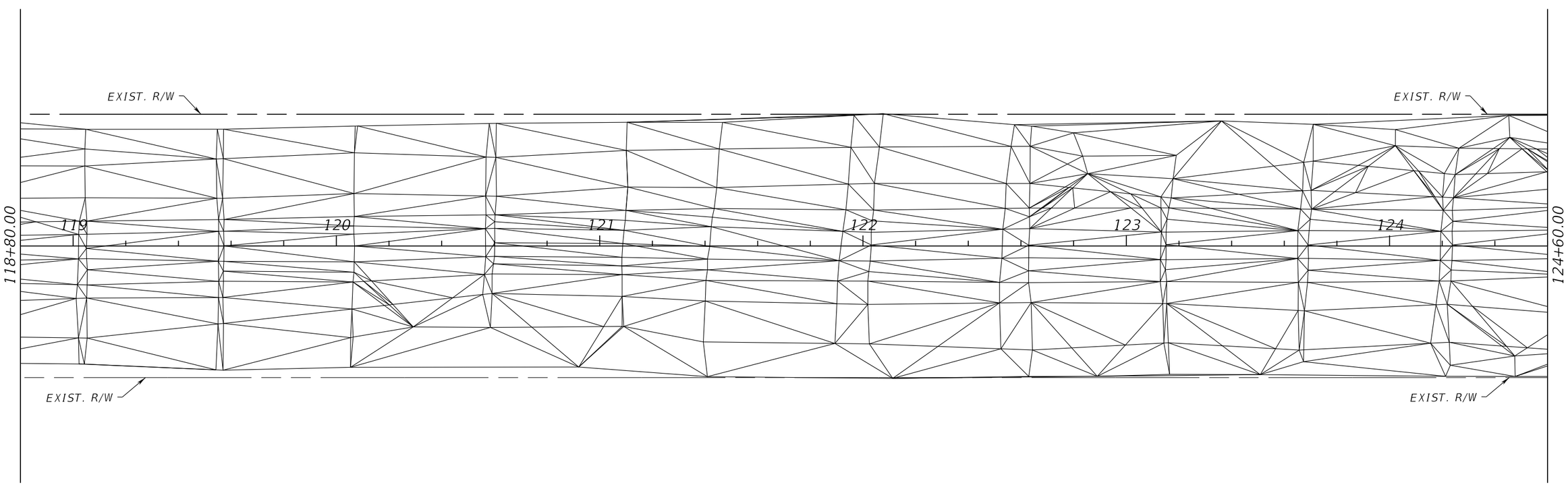

REVISIONS			
DATE	DESCRIPTION	DATE	DESCRIPTION

MAPS PREPARED BY:
CH PEREZ & ASSOCIATES CONSULTING ENGINEERS, INC
CERTIFICATE OF AUTHORIZATION NO. EB-25976 / LB-7360
9594 NW 41 STREET, SUITE 201
MIAMI, FLORIDA 33178
(305)592-1070 / FAX: (305)592-1078
FRANK L. NUNEZ, JR., PSM
P.S.M. LICENSE NO. 6382

LUDLAM TRAIL CORRIDOR PD&E STUDY

Miami-Dade County Parks, Recreation, and Open Spaces (MDPROS)	Hickman Building 275 NW 2nd Street Miami, FL 33128 305-755-7800	P&R CONTRACT NO. RFQ 786B P&R PROJECT NO. 43502-15-001-14470619

DTM

SHEET NO. 04

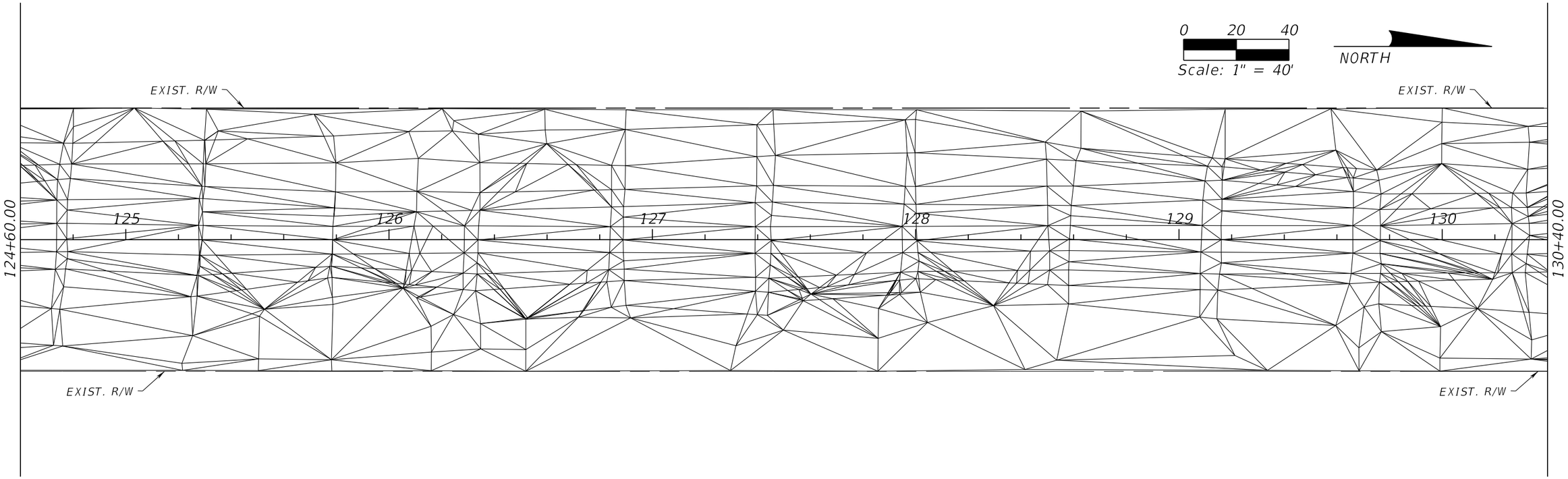

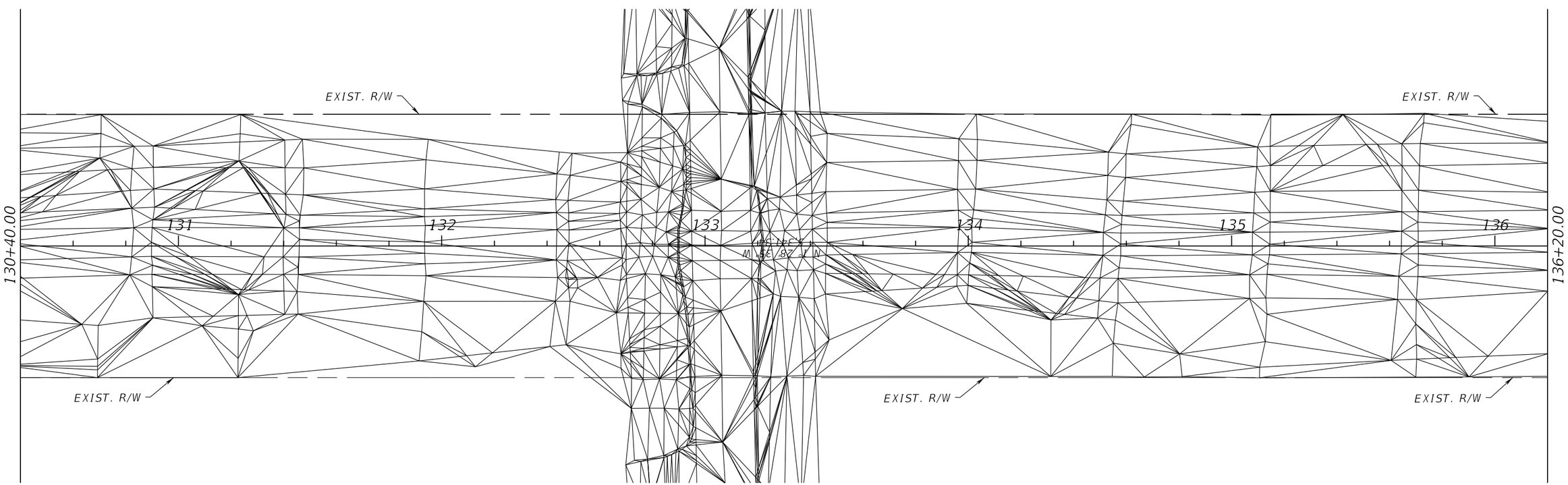

REVISIONS			
DATE	DESCRIPTION	DATE	DESCRIPTION

MAPS PREPARED BY:
CH PEREZ & ASSOCIATES CONSULTING ENGINEERS, INC
CERTIFICATE OF AUTHORIZATION NO. EB-25976 / LB-7360
9594 NW 41 STREET, SUITE 201
MIAMI, FLORIDA 33178
(305)592-1070 / FAX: (305)592-1078
FRANK L. NUNEZ, JR., PSM
P.S.M. LICENSE NO. 6382

LUDLAM TRAIL CORRIDOR PD&E STUDY

Miami-Dade County Parks, Recreation, and Open Spaces (MDPROS)	Hickman Building 275 NW 2nd Street Miami, FL 33128 305-755-7800	P&R CONTRACT NO. RFQ 786B P&R PROJECT NO. 43502-15-001-14470619

DTM

SHEET NO. 05

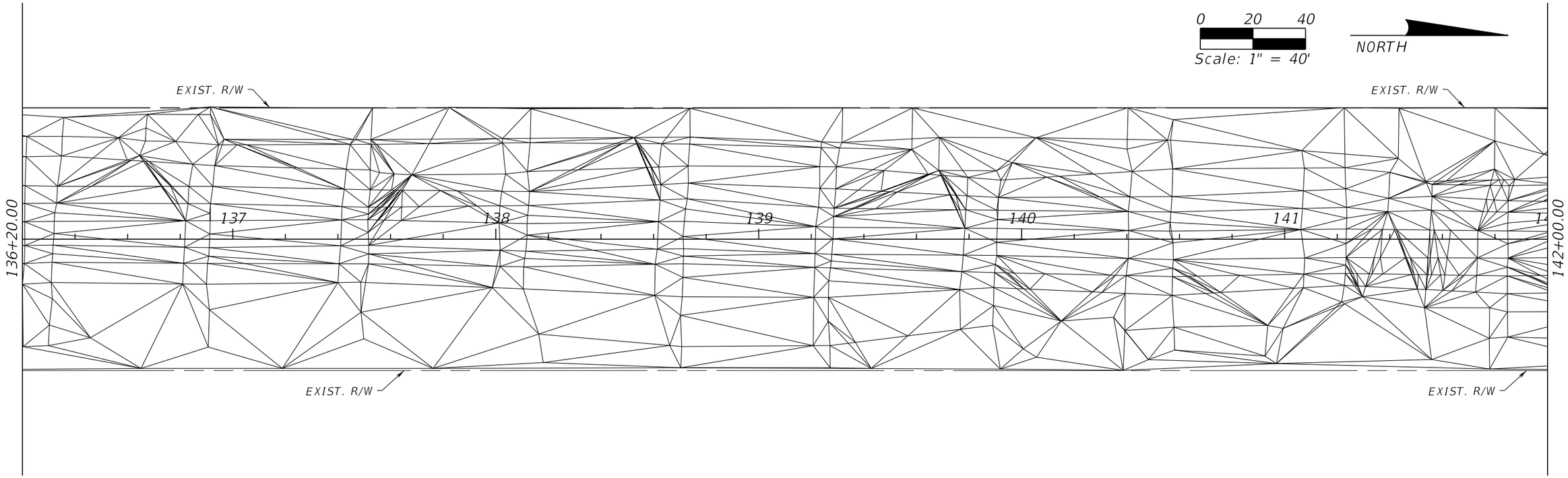

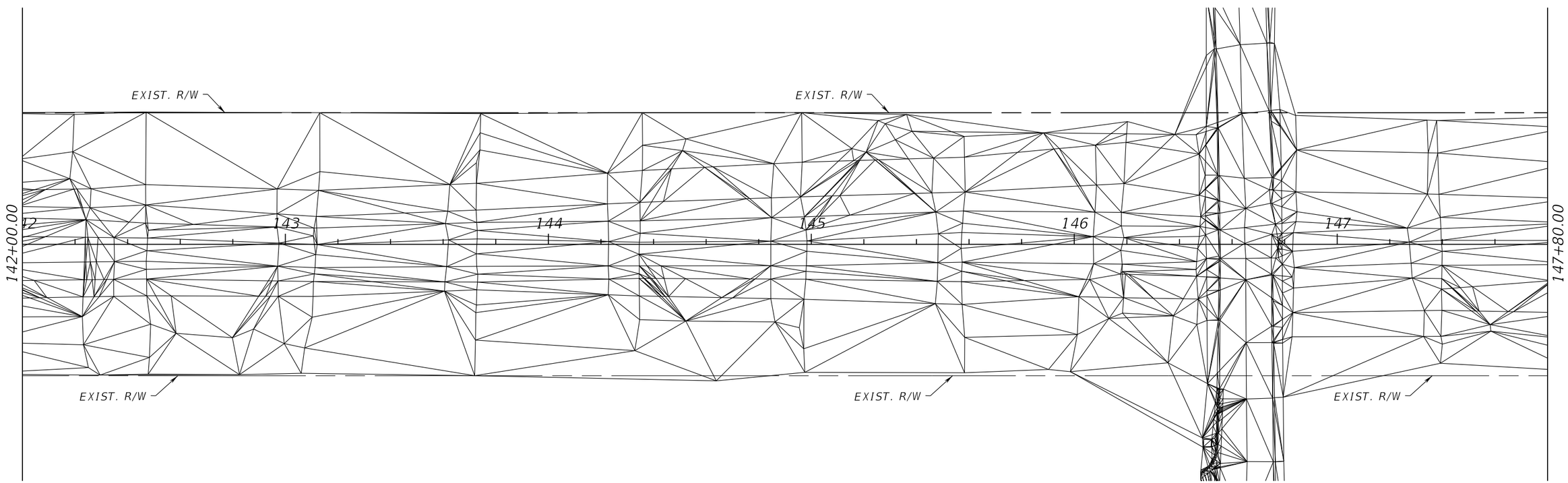

REVISIONS			
DATE	DESCRIPTION	DATE	DESCRIPTION

MAPS PREPARED BY:
CH PEREZ & ASSOCIATES CONSULTING ENGINEERS, INC
CERTIFICATE OF AUTHORIZATION NO. EB-25976 / LB-7360
9594 NW 41 STREET, SUITE 201
MIAMI, FLORIDA 33178
(305)592-1070 / FAX: (305)592-1078
FRANK L. NUNEZ, JR., PSM
P.S.M. LICENSE NO. 6382

LUDLAM TRAIL CORRIDOR PD&E STUDY

Miami-Dade County Parks, Recreation, and Open Spaces (MDPROS)	Hickman Building 275 NW 2nd Street Miami, FL 33128 305-755-7800	P&R CONTRACT NO. RFQ 786B P&R PROJECT NO. 43502-15-001-14470619

DTM

SHEET NO. 06

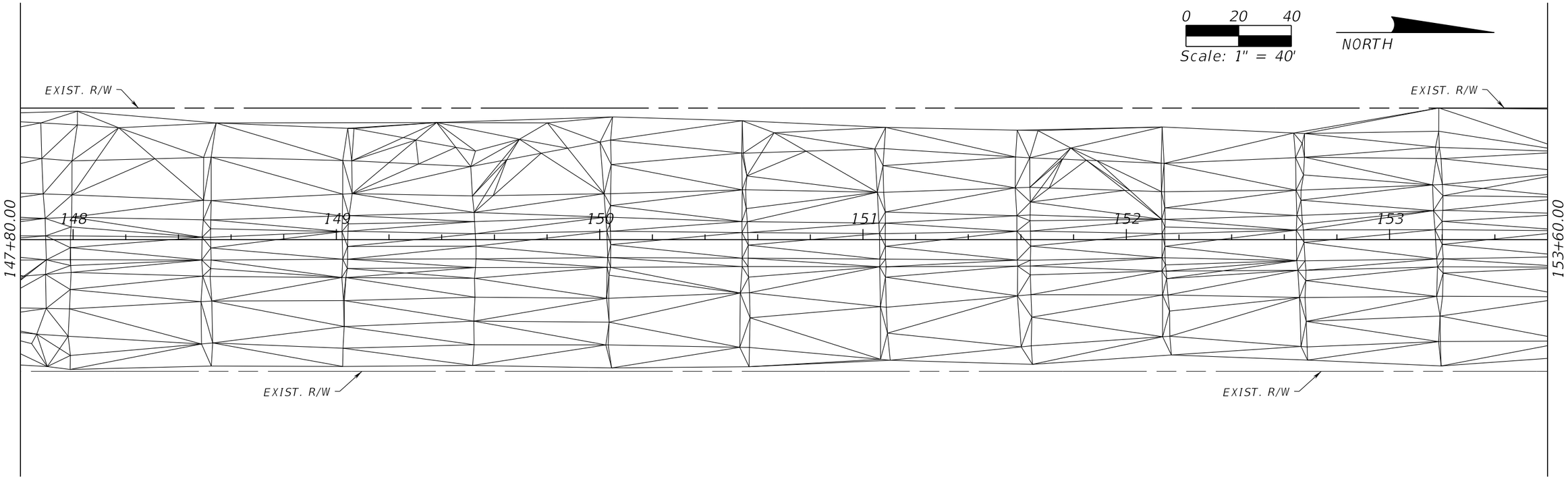

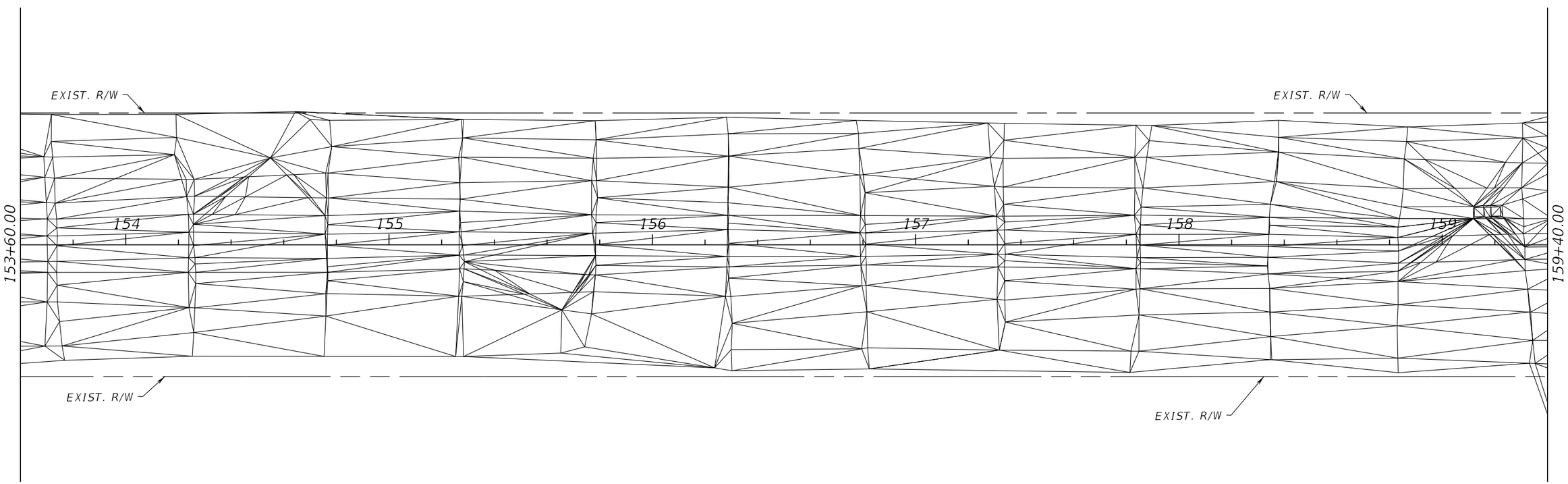

REVISIONS			
DATE	DESCRIPTION	DATE	DESCRIPTION

MAPS PREPARED BY:
CH PEREZ & ASSOCIATES CONSULTING ENGINEERS, INC
CERTIFICATE OF AUTHORIZATION NO. EB-25976 / LB-7360
9594 NW 41 STREET, SUITE 201
MIAMI, FLORIDA 33178
(305)592-1070 / FAX: (305)592-1078
FRANK L. NUNEZ, JR., PSM
P.S.M. LICENSE NO. 6382

LUDLAM TRAIL CORRIDOR PD&E STUDY

Miami-Dade County Parks, Recreation, and Open Spaces (MDPROS)	Hickman Building 275 NW 2nd Street Miami, FL 33128 305-755-7800	P&R CONTRACT NO. RFQ 786B P&R PROJECT NO. 43502-15-001-14470619

DTM

SHEET NO. 07

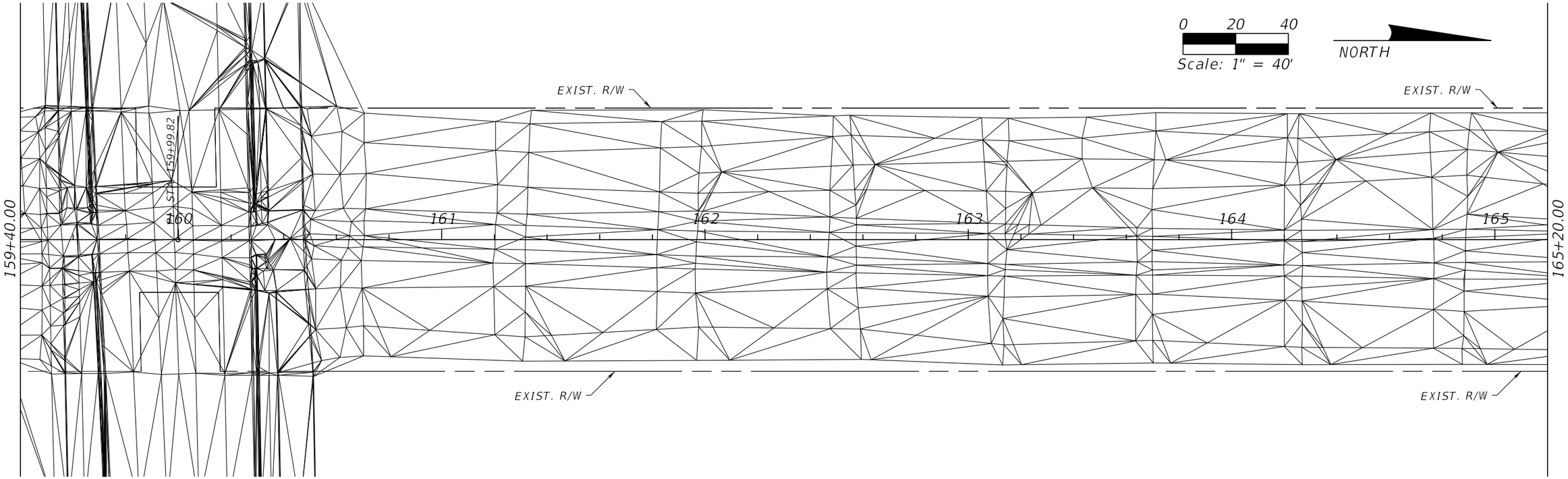

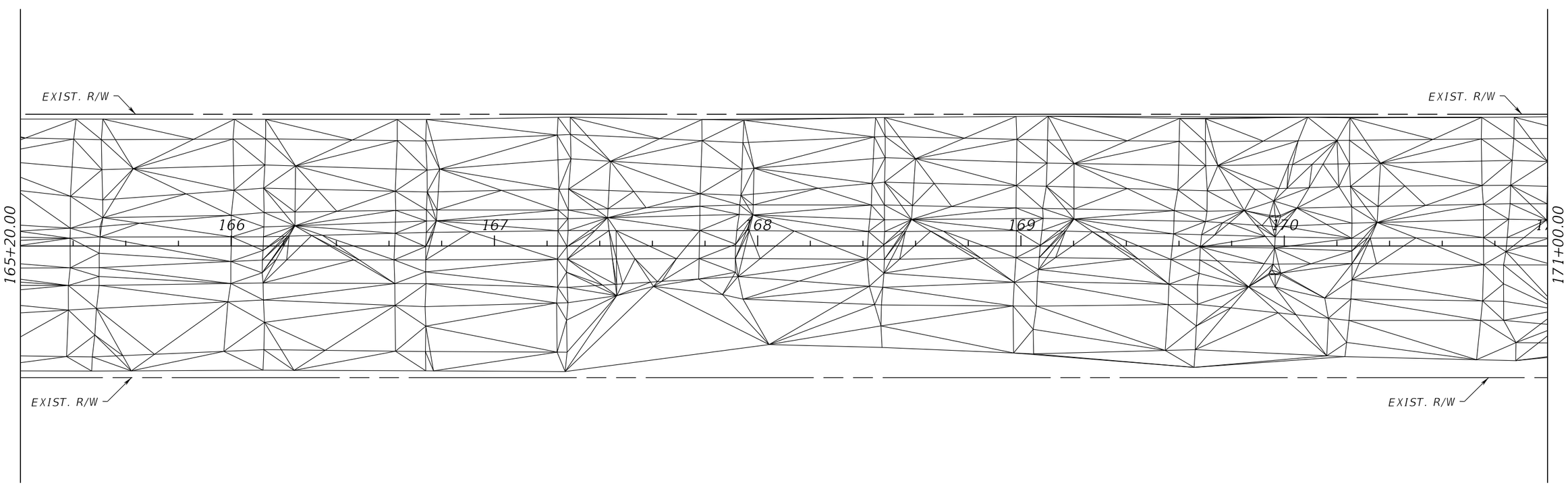

REVISIONS			
DATE	DESCRIPTION	DATE	DESCRIPTION

MAPS PREPARED BY:
CH PEREZ & ASSOCIATES CONSULTING ENGINEERS, INC
CERTIFICATE OF AUTHORIZATION NO. EB-25976 / LB-7360
9594 NW 41 STREET, SUITE 201
MIAMI, FLORIDA 33178
(305)592-1070 / FAX: (305)592-1078
FRANK L. NUNEZ, JR., PSM
P.S.M. LICENSE NO. 6382

LUDLAM TRAIL CORRIDOR PD&E STUDY

Miami-Dade County
Parks, Recreation, and
Open Spaces
(MDPROS)

Hickman Building
275 NW 2nd Street
Miami, FL 33128
305-755-7800

P&R CONTRACT NO.
RFQ 786B
P&R PROJECT NO.
43502-15-001-14470619

DTM

SHEET NO.
08

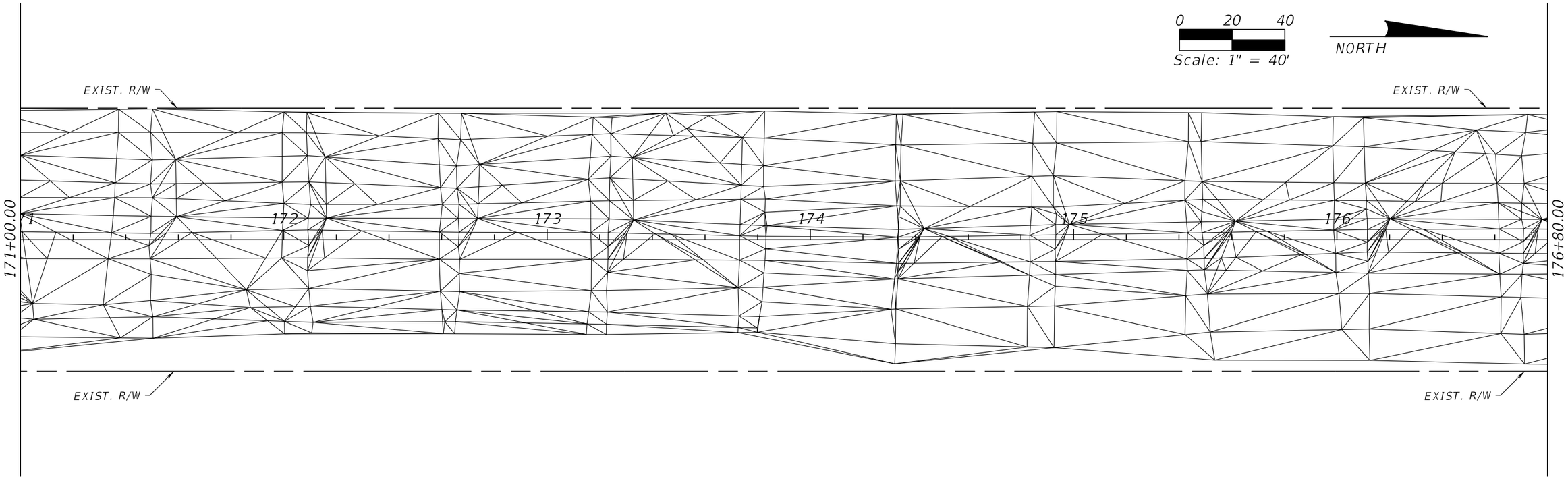

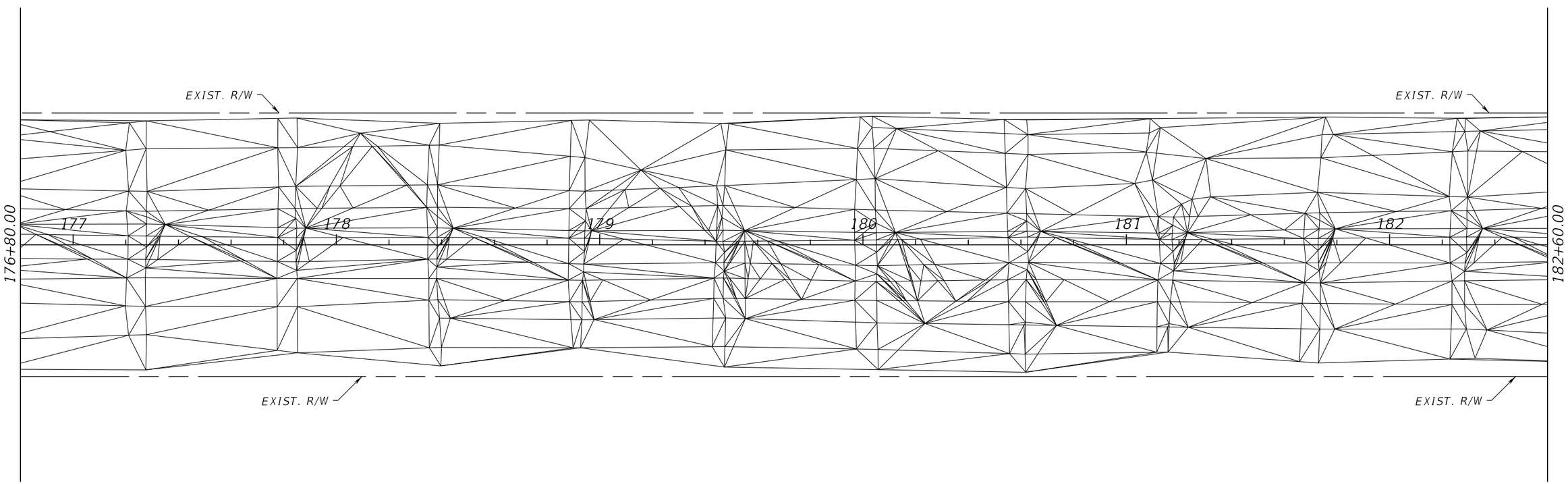

REVISIONS			
DATE	DESCRIPTION	DATE	DESCRIPTION

MAPS PREPARED BY:
CH PEREZ & ASSOCIATES CONSULTING ENGINEERS, INC
CERTIFICATE OF AUTHORIZATION NO. EB-25976 / LB-7360
9594 NW 41 STREET, SUITE 201
MIAMI, FLORIDA 33178
(305)592-1070 / FAX: (305)592-1078
FRANK L. NUNEZ, JR., PSM
P.S.M. LICENSE NO. 6382

LUDLAM TRAIL CORRIDOR PD&E STUDY

Miami-Dade County
Parks, Recreation, and
Open Spaces
(MDPROS)

Hickman Building
275 NW 2nd Street
Miami, FL 33128
305-755-7800

P&R CONTRACT NO.
RFQ 786B
P&R PROJECT NO.
43502-15-001-14470619

DTM

SHEET NO.
09

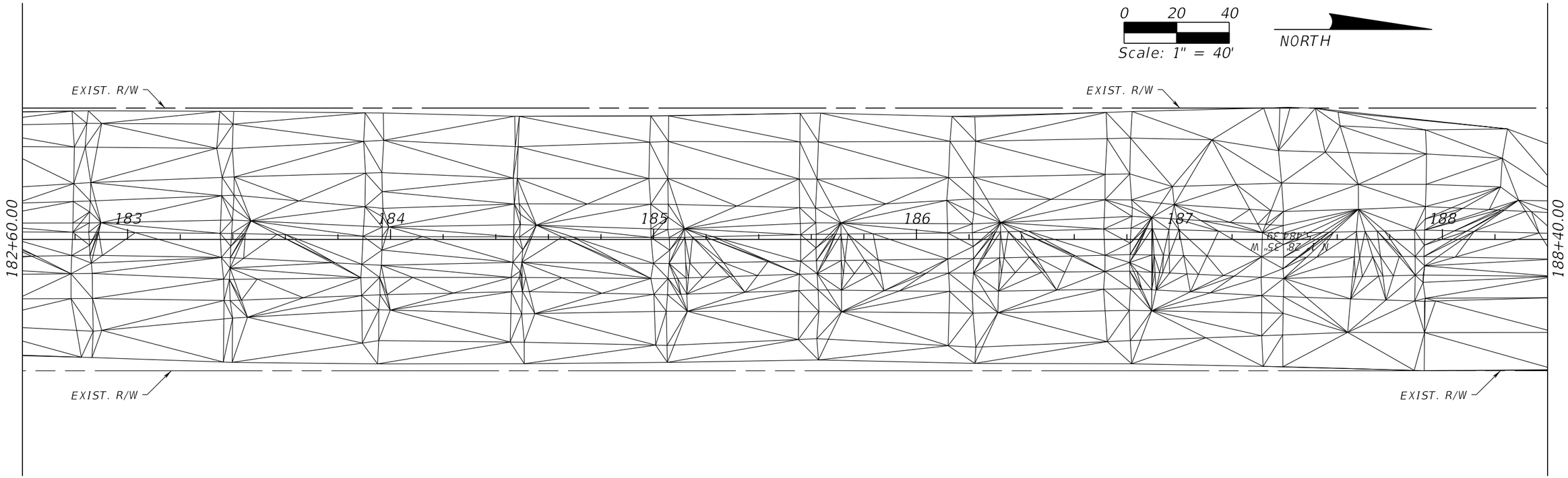

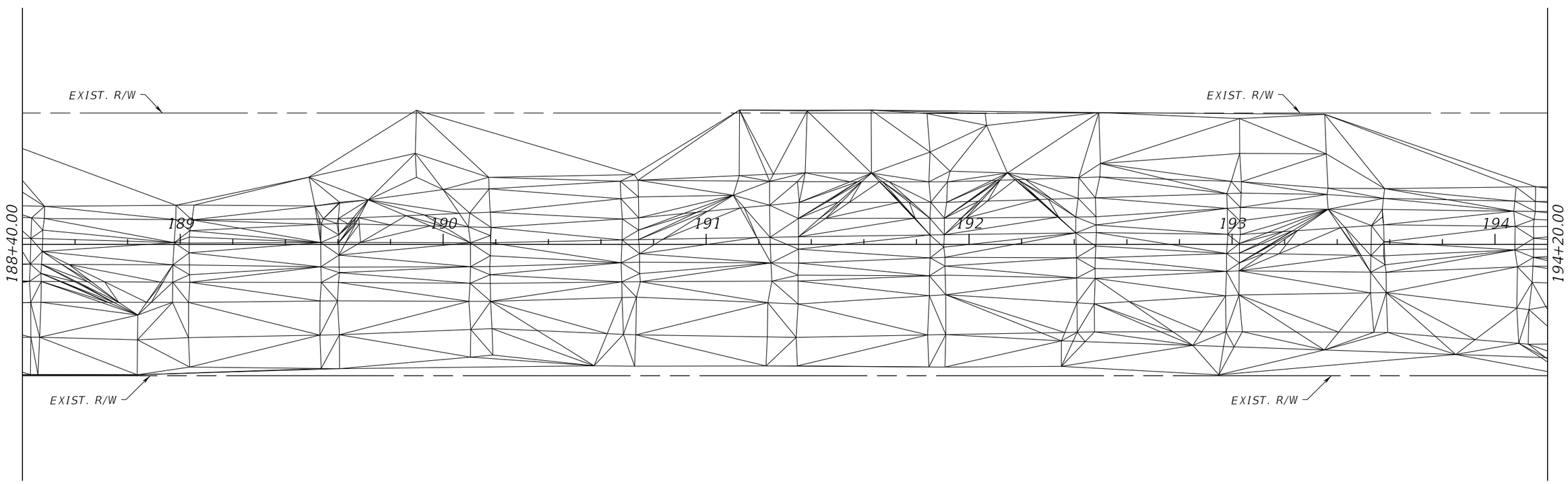

REVISIONS			
DATE	DESCRIPTION	DATE	DESCRIPTION

MAPS PREPARED BY:
CH PEREZ & ASSOCIATES CONSULTING ENGINEERS, INC
CERTIFICATE OF AUTHORIZATION NO. EB-25976 / LB-7360
9594 NW 41 STREET, SUITE 201
MIAMI, FLORIDA 33178
(305)592-1070 / FAX: (305)592-1078
FRANK L. NUNEZ, JR., PSM
P.S.M. LICENSE NO. 6382

LUDLAM TRAIL CORRIDOR PD&E STUDY

Miami-Dade County Parks, Recreation, and Open Spaces (MDPROS)	Hickman Building 275 NW 2nd Street Miami, FL 33128 305-755-7800	P&R CONTRACT NO. RFQ 786B P&R PROJECT NO. 43502-15-001-14470619

DTM

SHEET NO. 10

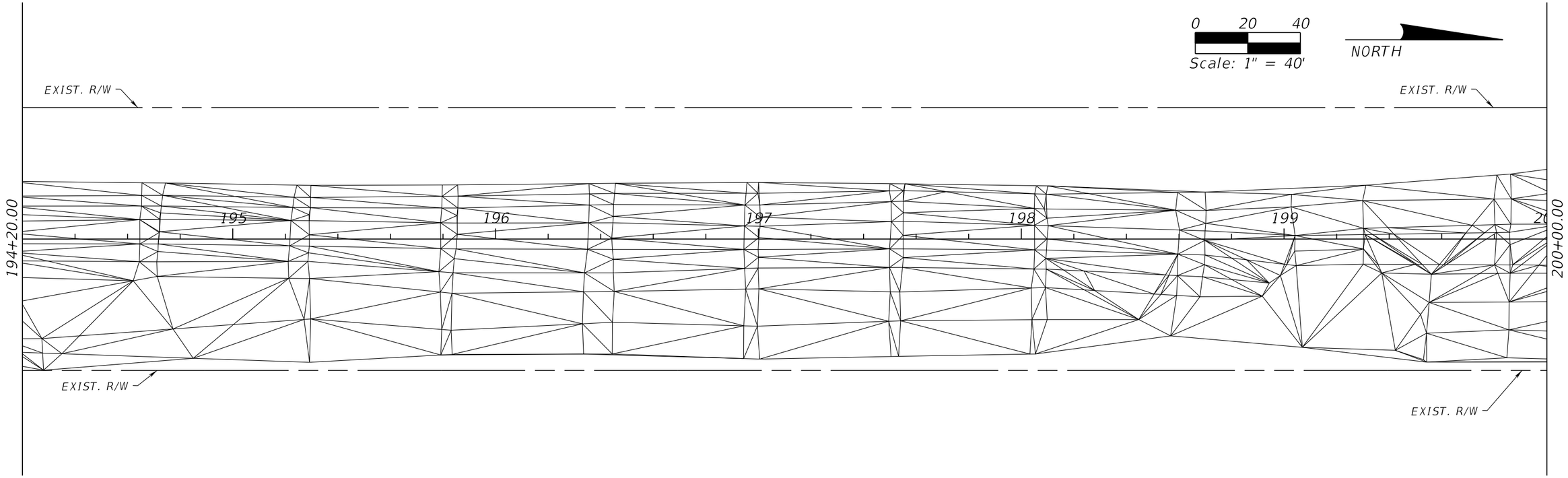

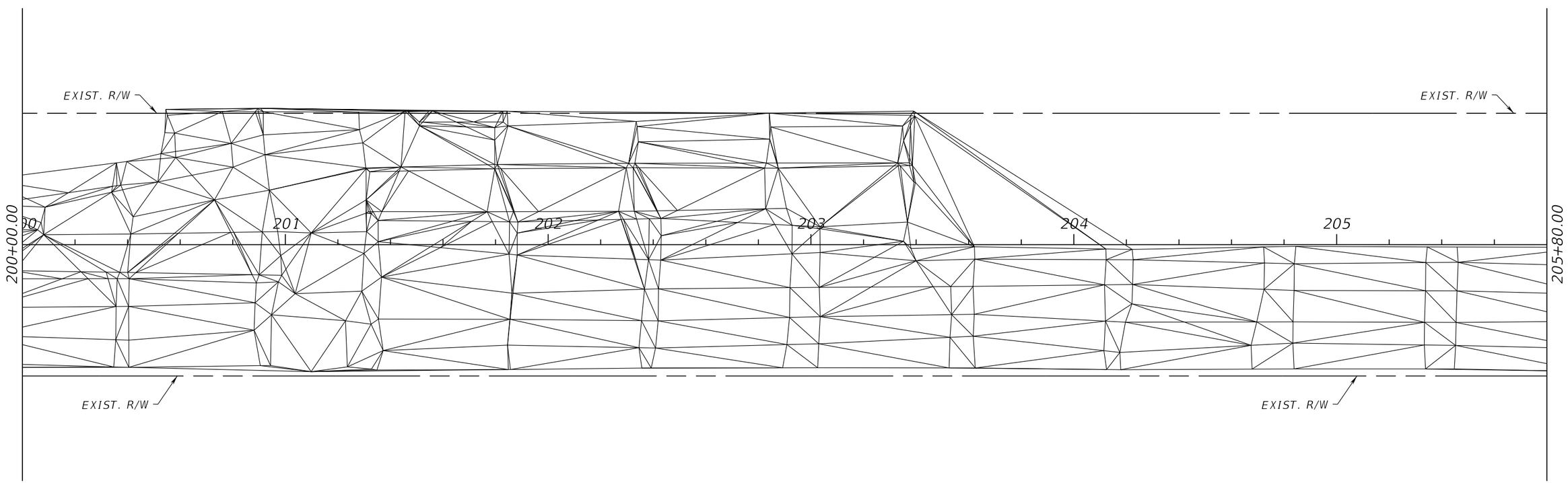

REVISIONS			
DATE	DESCRIPTION	DATE	DESCRIPTION

MAPS PREPARED BY:
CH PEREZ & ASSOCIATES CONSULTING ENGINEERS, INC
CERTIFICATE OF AUTHORIZATION NO. EB-25976 / LB-7360
9594 NW 41 STREET, SUITE 201
MIAMI, FLORIDA 33178
(305)592-1070 / FAX: (305)592-1078
FRANK L. NUNEZ, JR., PSM
P.S.M. LICENSE NO. 6382

LUDLAM TRAIL CORRIDOR PD&E STUDY

Miami-Dade County Parks, Recreation, and Open Spaces (MDPROS)	Hickman Building 275 NW 2nd Street Miami, FL 33128 305-755-7800	P&R CONTRACT NO. RFQ 786B
		P&R PROJECT NO. 43502-15-001-14470619

DTM

SHEET NO.

11

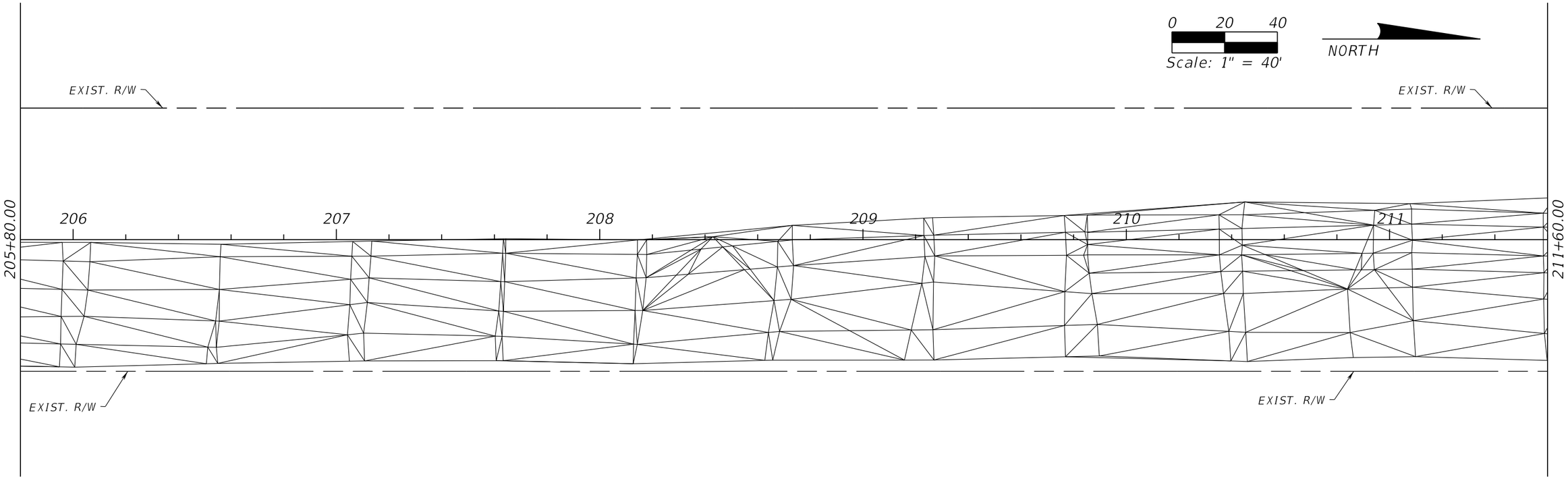

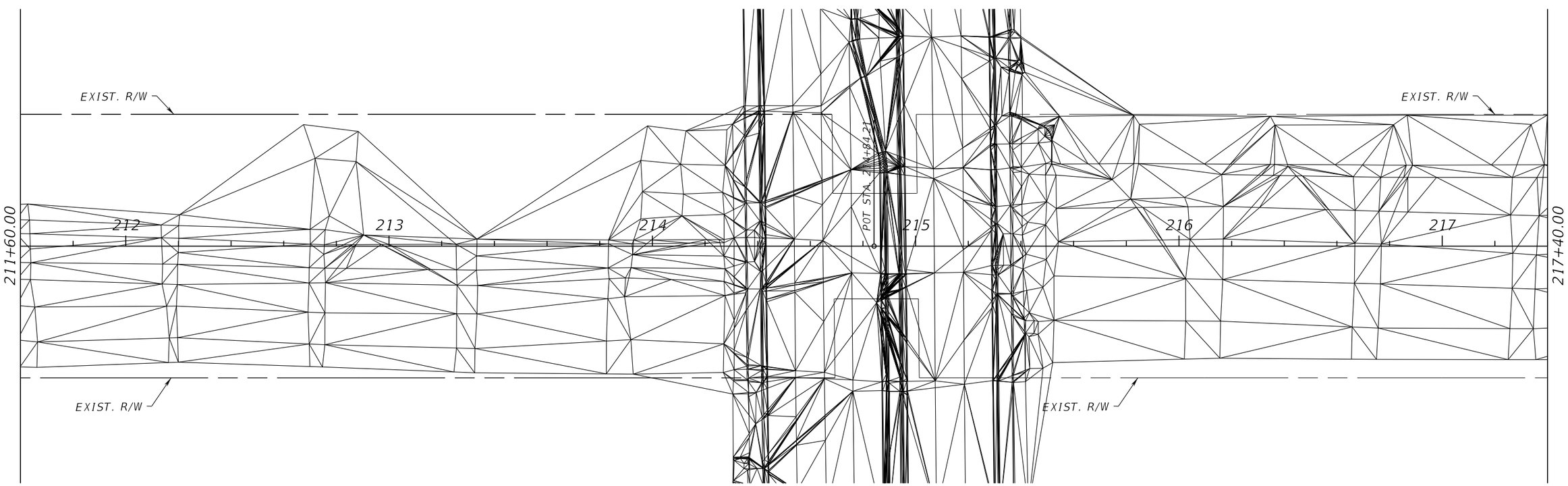

REVISIONS			
DATE	DESCRIPTION	DATE	DESCRIPTION

MAPS PREPARED BY:
CH PEREZ & ASSOCIATES CONSULTING ENGINEERS, INC
CERTIFICATE OF AUTHORIZATION NO. EB-25976 / LB-7360
9594 NW 41 STREET, SUITE 201
MIAMI, FLORIDA 33178
(305)592-1070 / FAX: (305)592-1078
FRANK L. NUNEZ, JR., PSM
P.S.M. LICENSE NO. 6382

LUDLAM TRAIL CORRIDOR PD&E STUDY

Miami-Dade County
Parks, Recreation, and
Open Spaces
(MDPROS)

Hickman Building
275 NW 2nd Street
Miami, FL 33128
305-755-7800

P&R CONTRACT NO.
RFQ 786B
P&R PROJECT NO.
43502-15-001-14470619

DTM

SHEET NO.
12

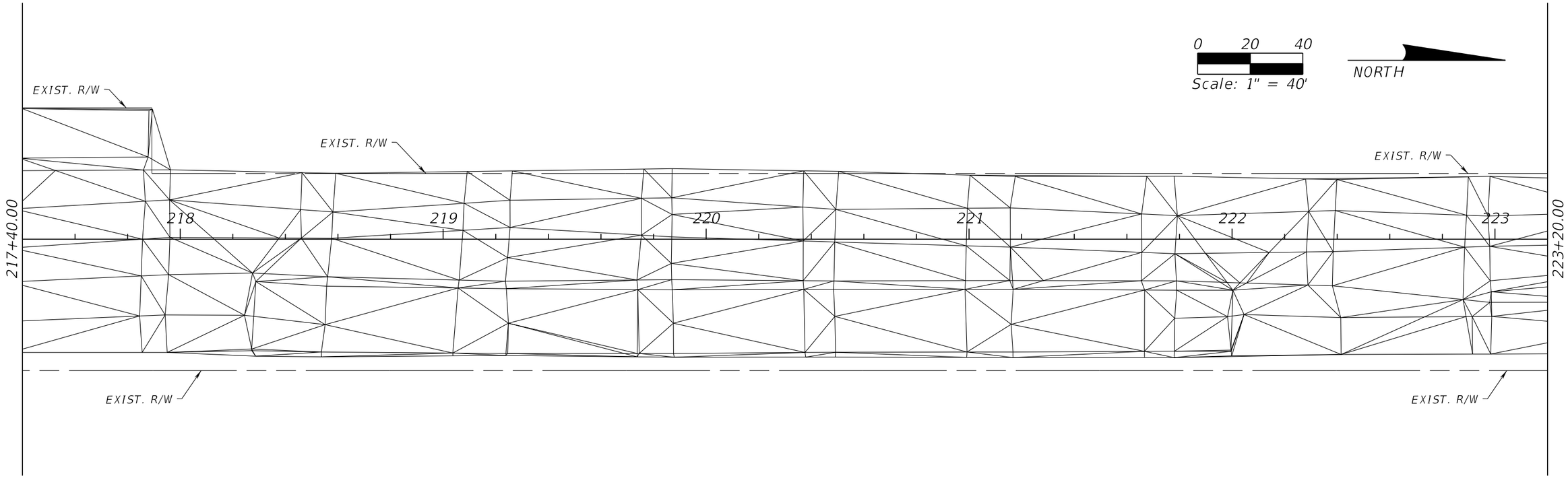

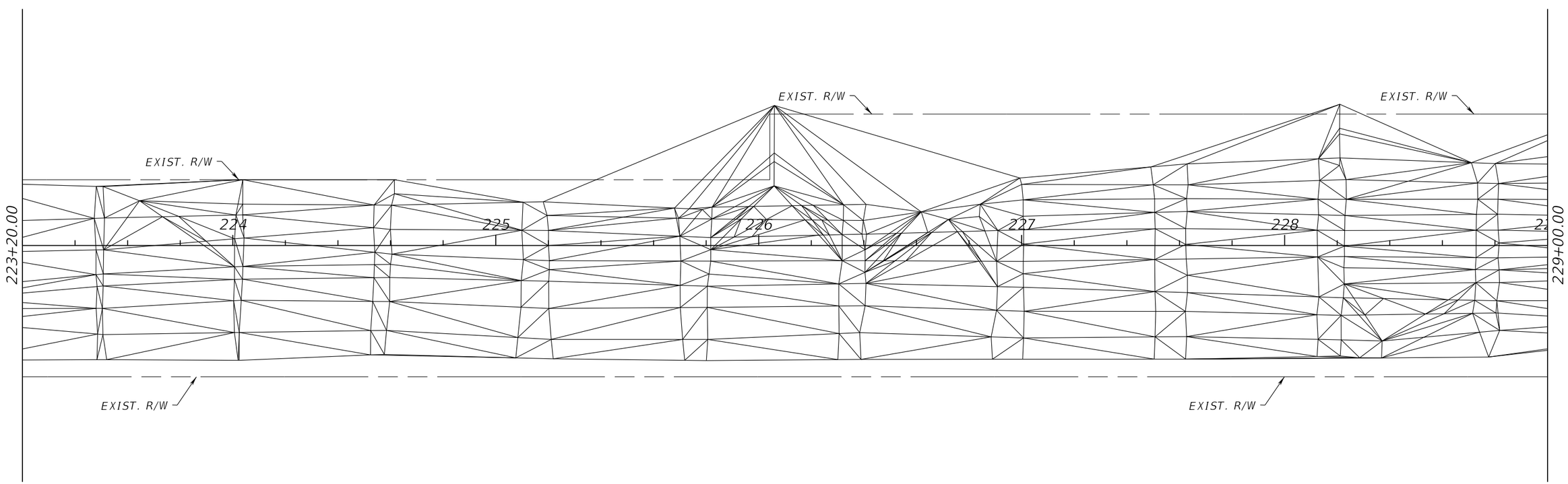

REVISIONS			
DATE	DESCRIPTION	DATE	DESCRIPTION

MAPS PREPARED BY:
CH PEREZ & ASSOCIATES CONSULTING ENGINEERS, INC
CERTIFICATE OF AUTHORIZATION NO. EB-25976 / LB-7360
9594 NW 41 STREET, SUITE 201
MIAMI, FLORIDA 33178
(305)592-1070 / FAX: (305)592-1078
FRANK L. NUNEZ, JR., PSM
P.S.M. LICENSE NO. 6382

LUDLAM TRAIL CORRIDOR PD&E STUDY

Miami-Dade County
Parks, Recreation, and
Open Spaces
(MDPROS)

Hickman Building
275 NW 2nd Street
Miami, FL 33128
305-755-7800

P&R CONTRACT NO.
RFQ 786B
P&R PROJECT NO.
43502-15-001-14470619

DTM

SHEET NO.
13

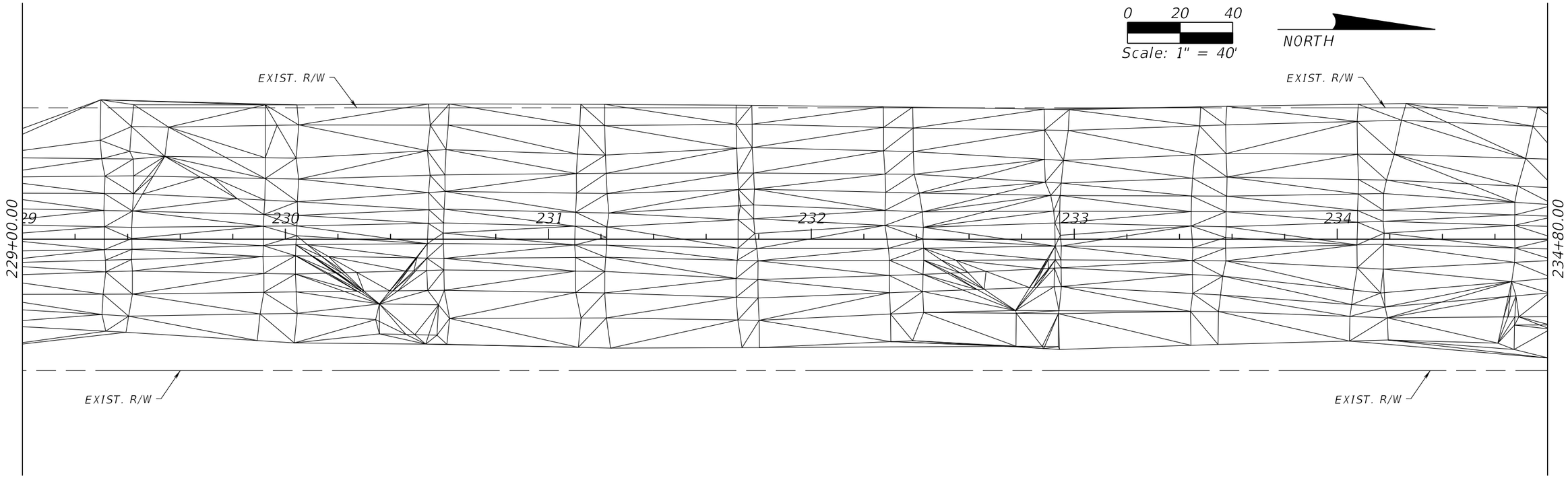

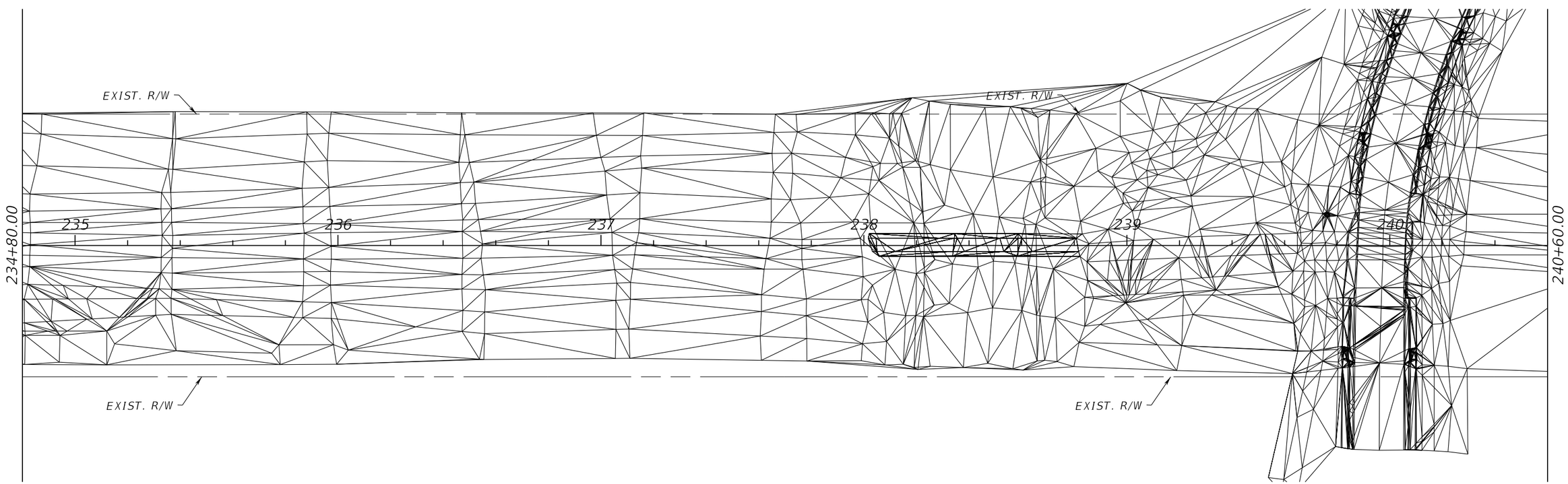

REVISIONS			
DATE	DESCRIPTION	DATE	DESCRIPTION

MAPS PREPARED BY:
CH PEREZ & ASSOCIATES CONSULTING ENGINEERS, INC
CERTIFICATE OF AUTHORIZATION NO. EB-25976 / LB-7360
9594 NW 41 STREET, SUITE 201
MIAMI, FLORIDA 33178
(305)592-1070 / FAX: (305)592-1078
FRANK L. NUNEZ, JR., PSM
P.S.M. LICENSE NO. 6382

LUDLAM TRAIL CORRIDOR PD&E STUDY

Miami-Dade County Parks, Recreation, and Open Spaces (MDPROS)	Hickman Building 275 NW 2nd Street Miami, FL 33128 305-755-7800	P&R CONTRACT NO. RFQ 786B P&R PROJECT NO. 43502-15-001-14470619

DTM

SHEET NO. 14

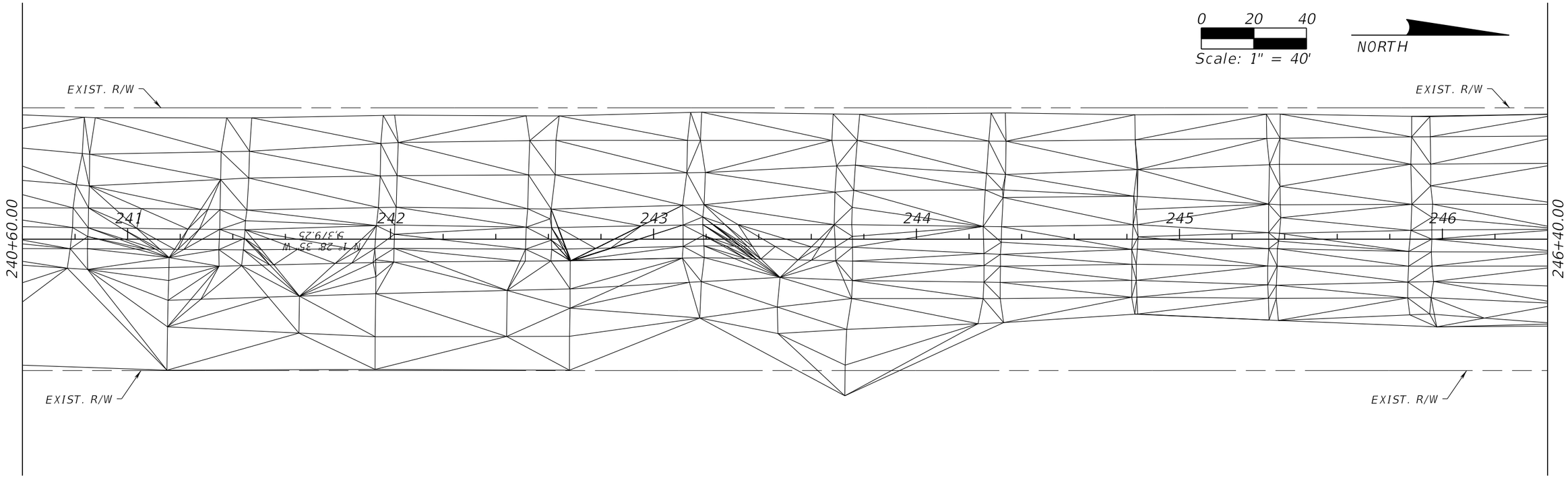

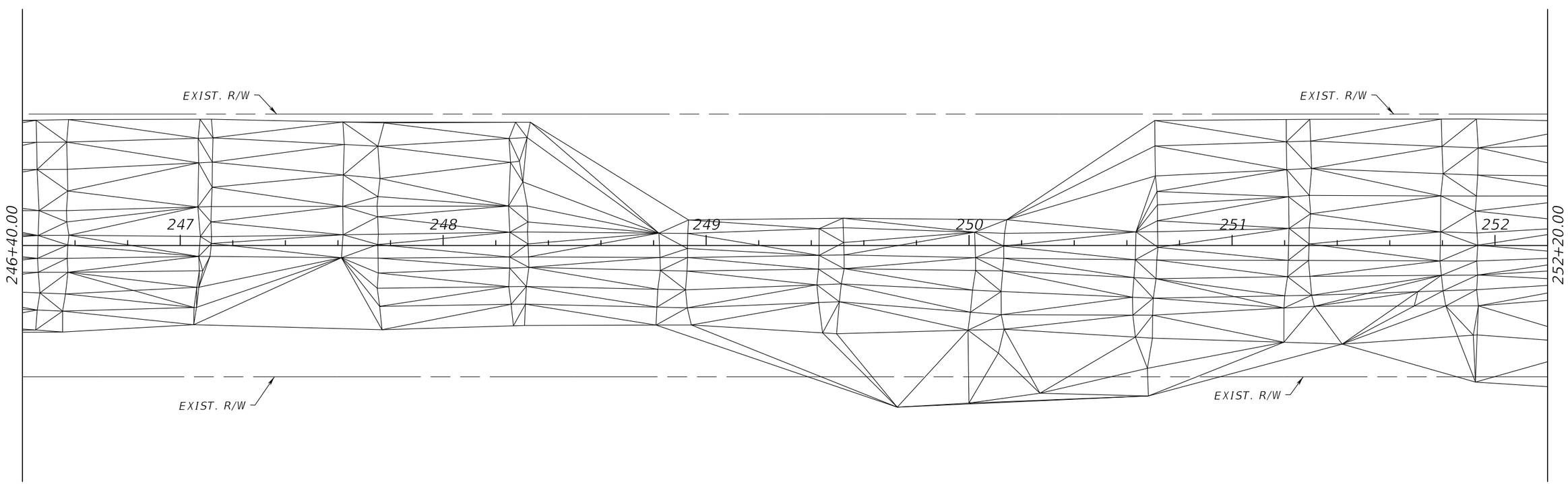

REVISIONS			
DATE	DESCRIPTION	DATE	DESCRIPTION

MAPS PREPARED BY:
CH PEREZ & ASSOCIATES CONSULTING ENGINEERS, INC
CERTIFICATE OF AUTHORIZATION NO. EB-25976 / LB-7360
9594 NW 41 STREET, SUITE 201
MIAMI, FLORIDA 33178
(305)592-1070 / FAX: (305)592-1078
FRANK L. NUNEZ, JR., PSM
P.S.M. LICENSE NO. 6382

LUDLAM TRAIL CORRIDOR PD&E STUDY

Miami-Dade County
Parks, Recreation, and
Open Spaces
(MDPROS)

Hickman Building
275 NW 2nd Street
Miami, FL 33128
305-755-7800

P&R CONTRACT NO.
RFQ 786B
P&R PROJECT NO.
43502-15-001-14470619

DTM

SHEET NO.
15

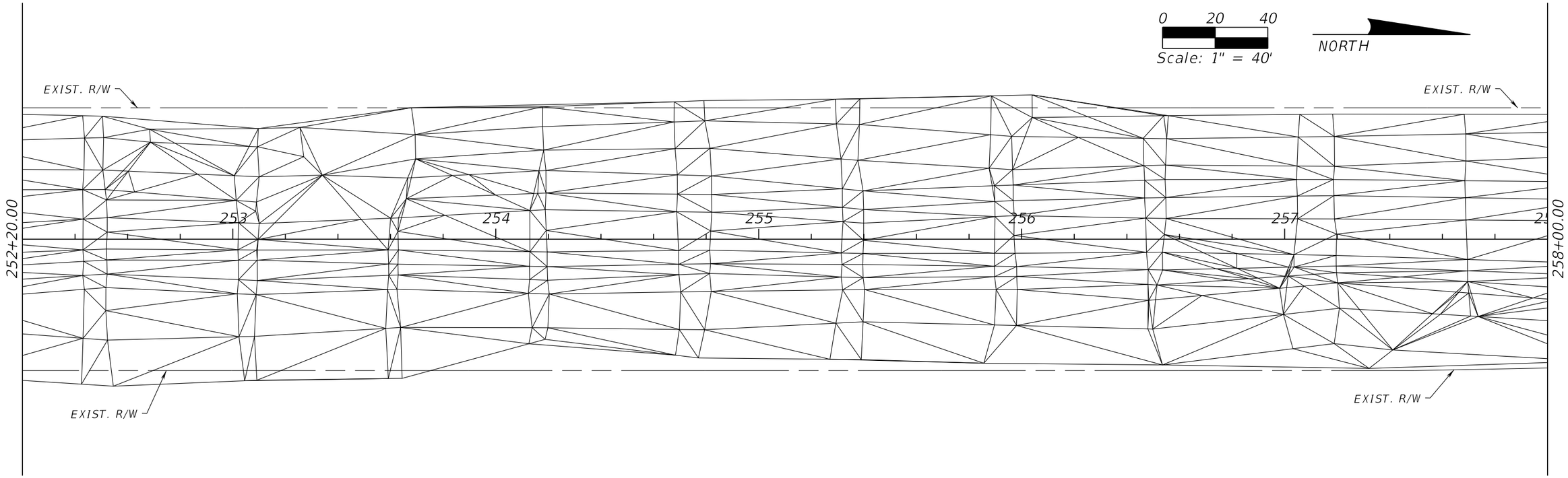

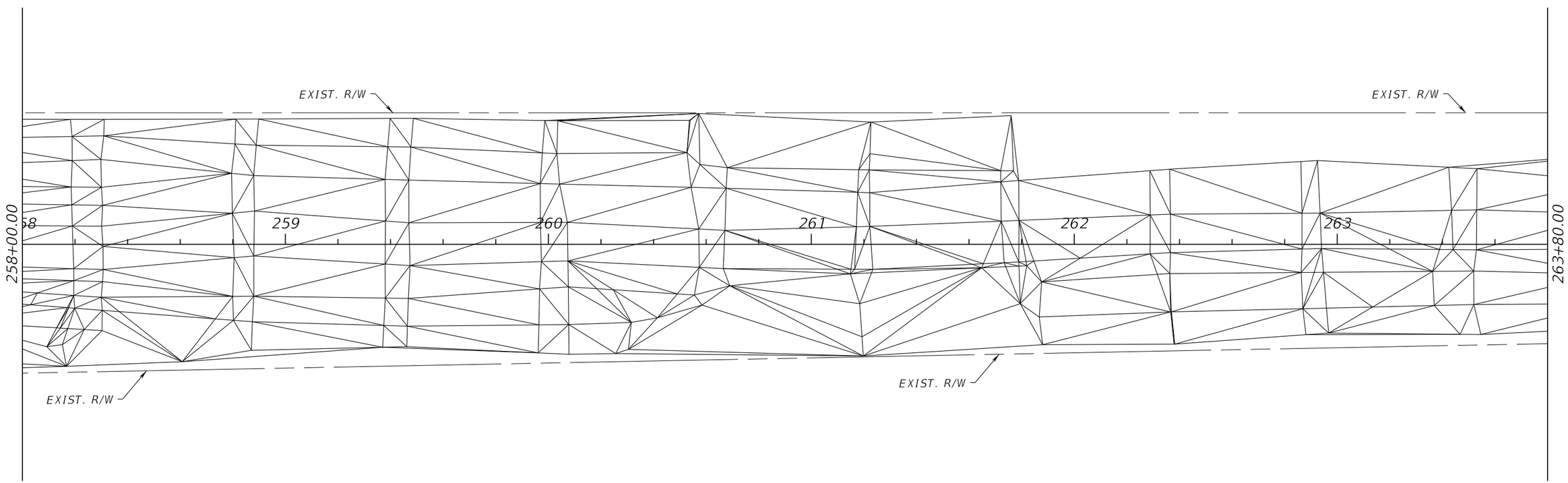

REVISIONS			
DATE	DESCRIPTION	DATE	DESCRIPTION

MAPS PREPARED BY:
CH PEREZ & ASSOCIATES CONSULTING ENGINEERS, INC
CERTIFICATE OF AUTHORIZATION NO. EB-25976 / LB-7360
9594 NW 41 STREET, SUITE 201
MIAMI, FLORIDA 33178
(305)592-1070 / FAX: (305)592-1078
FRANK L. NUNEZ, JR., PSM
P.S.M. LICENSE NO. 6382

LUDLAM TRAIL CORRIDOR PD&E STUDY

Miami-Dade County Parks, Recreation, and Open Spaces (MDPROS)	Hickman Building 275 NW 2nd Street Miami, FL 33128 305-755-7800	P&R CONTRACT NO. RFQ 786B P&R PROJECT NO. 43502-15-001-14470619

DTM

SHEET NO. 16

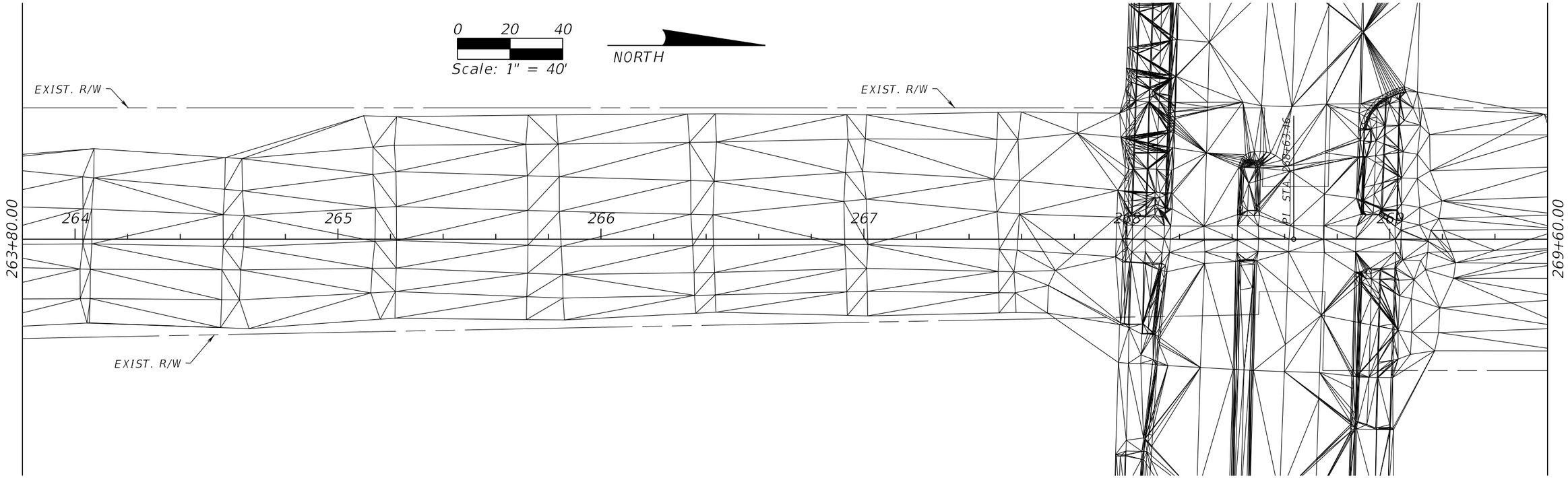

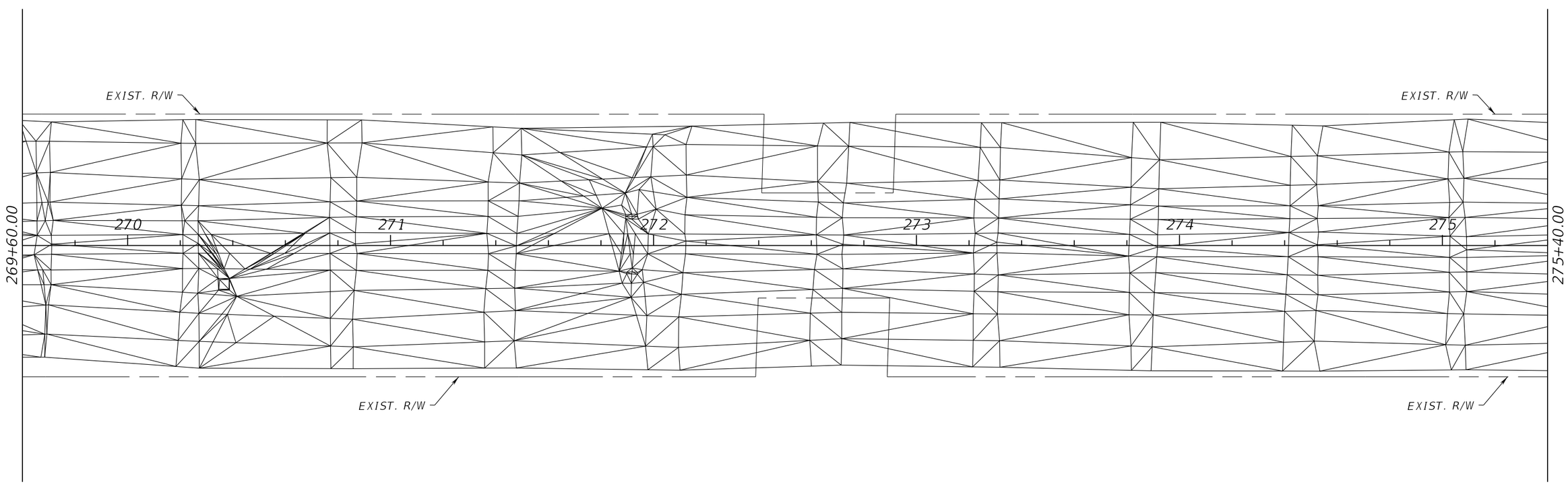

REVISIONS			
DATE	DESCRIPTION	DATE	DESCRIPTION

MAPS PREPARED BY:
CH PEREZ & ASSOCIATES CONSULTING ENGINEERS, INC
CERTIFICATE OF AUTHORIZATION NO. EB-25976 / LB-7360
9594 NW 41 STREET, SUITE 201
MIAMI, FLORIDA 33178
(305)592-1070 / FAX: (305)592-1078
FRANK L. NUNEZ, JR., PSM
P.S.M. LICENSE NO. 6382

LUDLAM TRAIL CORRIDOR PD&E STUDY

Miami-Dade County Parks, Recreation, and Open Spaces (MDPROS)	Hickman Building 275 NW 2nd Street Miami, FL 33128 305-755-7800	P&R CONTRACT NO. RFQ 786B P&R PROJECT NO. 43502-15-001-14470619

DTM

SHEET NO. 17

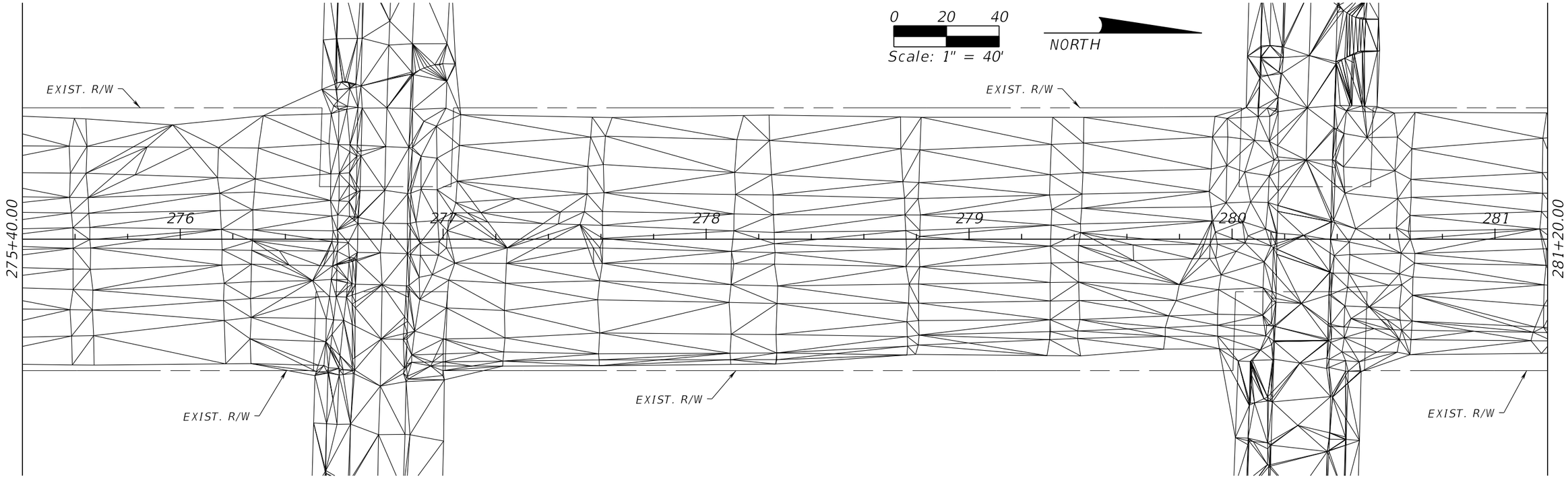

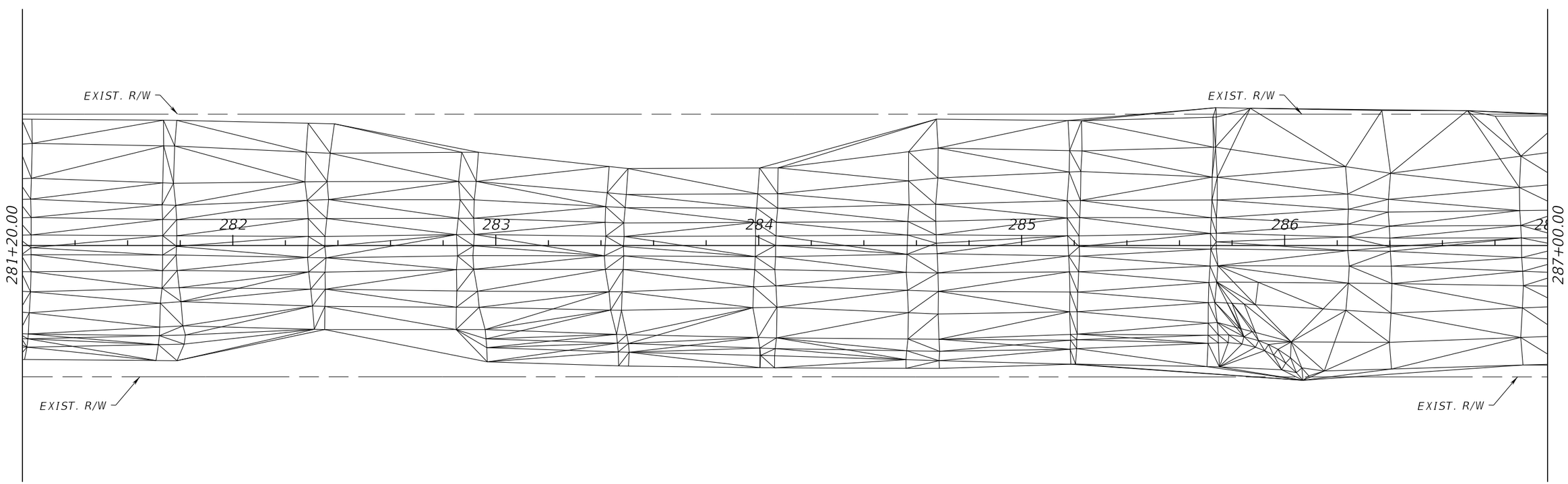

REVISIONS			
DATE	DESCRIPTION	DATE	DESCRIPTION

MAPS PREPARED BY:
CH PEREZ & ASSOCIATES CONSULTING ENGINEERS, INC
CERTIFICATE OF AUTHORIZATION NO. EB-25976 / LB-7360
9594 NW 41 STREET, SUITE 201
MIAMI, FLORIDA 33178
(305)592-1070 / FAX: (305)592-1078
FRANK L. NUNEZ, JR., PSM
P.S.M. LICENSE NO. 6382

LUDLAM TRAIL CORRIDOR PD&E STUDY

Miami-Dade County Parks, Recreation, and Open Spaces (MDPROS)	Hickman Building 275 NW 2nd Street Miami, FL 33128 305-755-7800	P&R CONTRACT NO. RFQ 786B P&R PROJECT NO. 43502-15-001-14470619

DTM

SHEET NO. 18

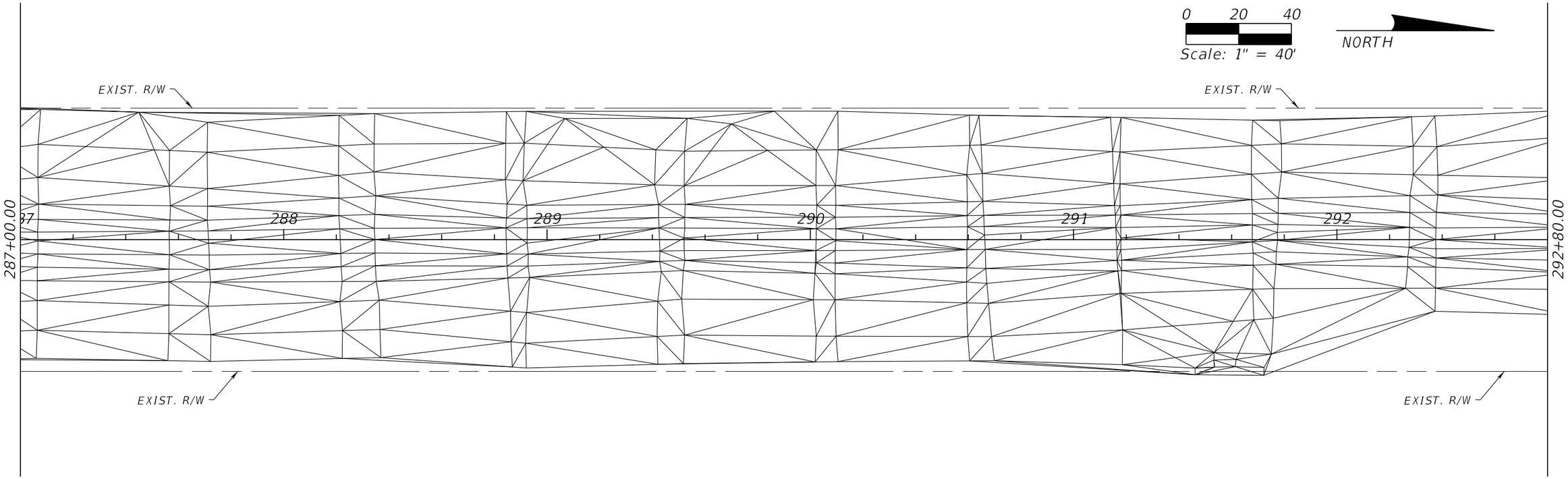

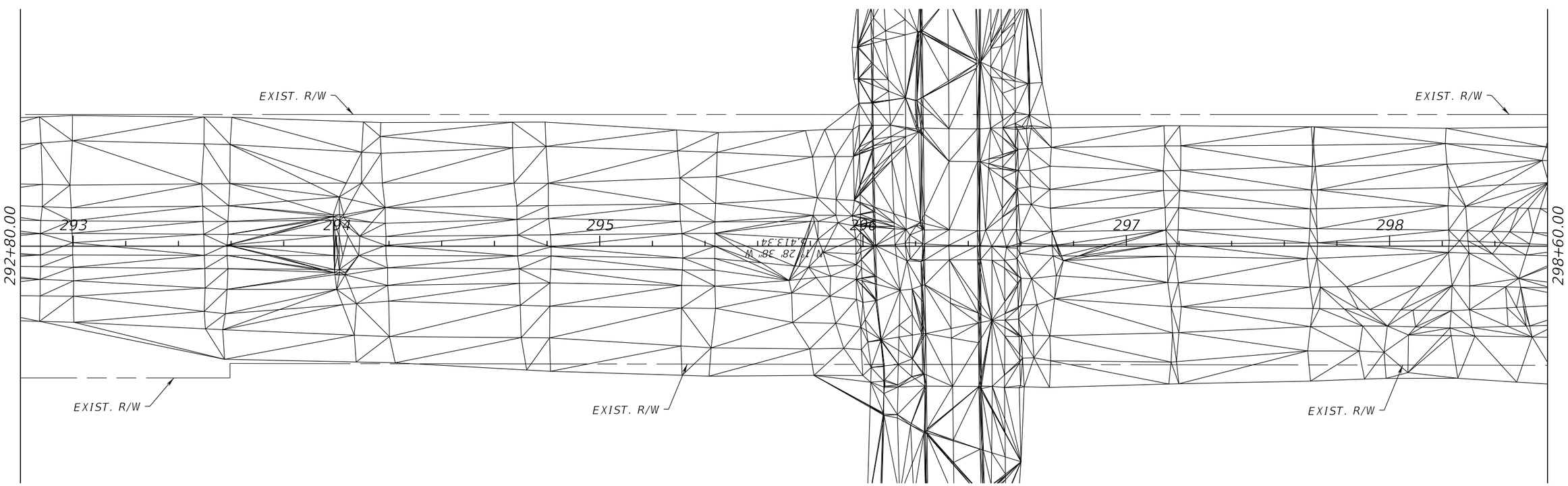

REVISIONS			
DATE	DESCRIPTION	DATE	DESCRIPTION

MAPS PREPARED BY:
CH PEREZ & ASSOCIATES CONSULTING ENGINEERS, INC
CERTIFICATE OF AUTHORIZATION NO. EB-25976 / LB-7360
9594 NW 41 STREET, SUITE 201
MIAMI, FLORIDA 33178
(305)592-1070 / FAX: (305)592-1078
FRANK L. NUNEZ, JR., PSM
P.S.M. LICENSE NO. 6382

LUDLAM TRAIL CORRIDOR PD&E STUDY

Miami-Dade County Parks, Recreation, and Open Spaces (MDPROS)	Hickman Building 275 NW 2nd Street Miami, FL 33128 305-755-7800	P&R CONTRACT NO. RFQ 786B P&R PROJECT NO. 43502-15-001-14470619

DTM

SHEET NO. 19

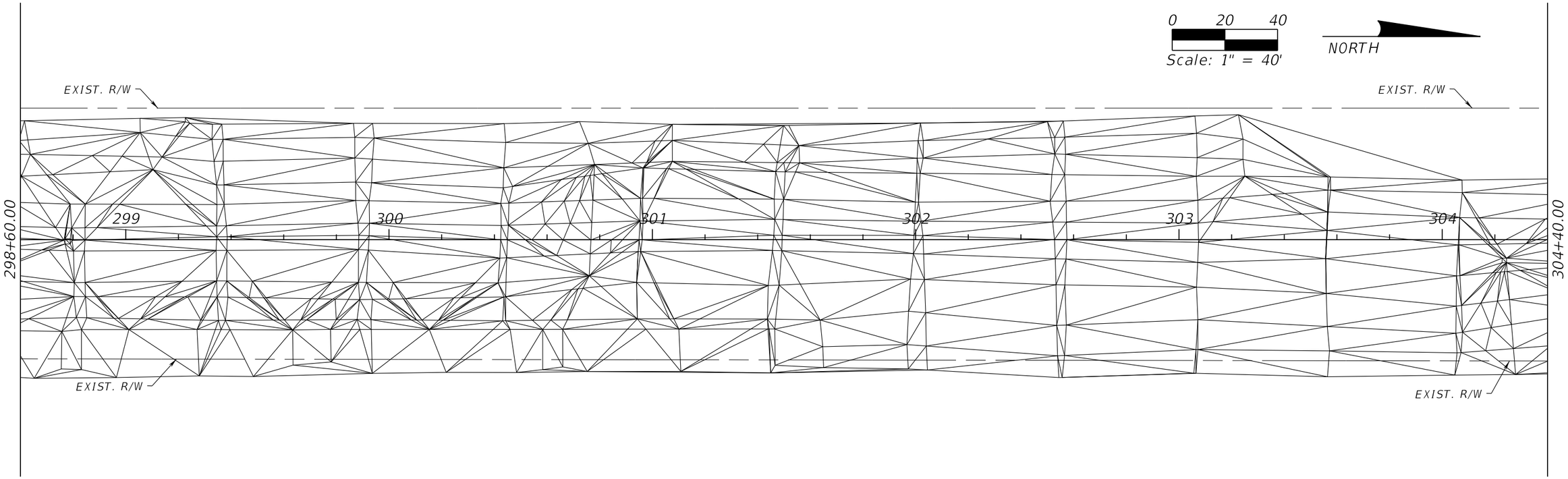

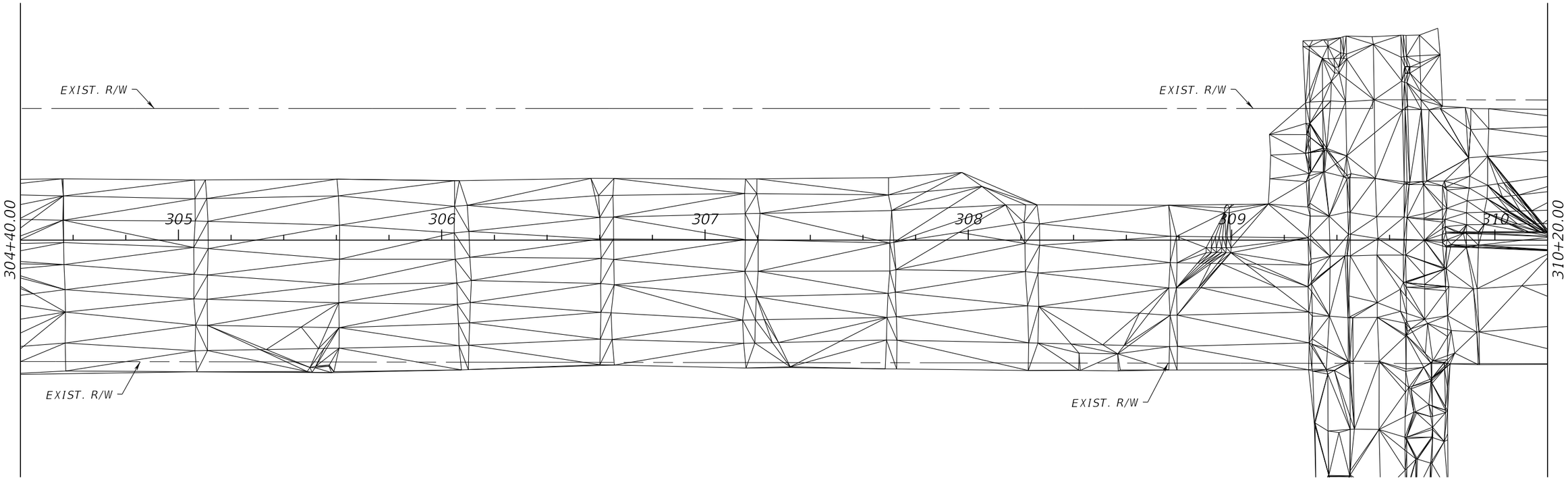

REVISIONS			
DATE	DESCRIPTION	DATE	DESCRIPTION

MAPS PREPARED BY:
CH PEREZ & ASSOCIATES CONSULTING ENGINEERS, INC
CERTIFICATE OF AUTHORIZATION NO. EB-25976 / LB-7360
9594 NW 41 STREET, SUITE 201
MIAMI, FLORIDA 33178
(305)592-1070 / FAX: (305)592-1078
FRANK L. NUNEZ, JR., PSM
P.S.M. LICENSE NO. 6382

LUDLAM TRAIL CORRIDOR PD&E STUDY

Miami-Dade County Parks, Recreation, and Open Spaces (MDPROS)	Hickman Building 275 NW 2nd Street Miami, FL 33128 305-755-7800	P&R CONTRACT NO. RFQ 786B P&R PROJECT NO. 43502-15-001-14470619

DTM

SHEET NO. 20

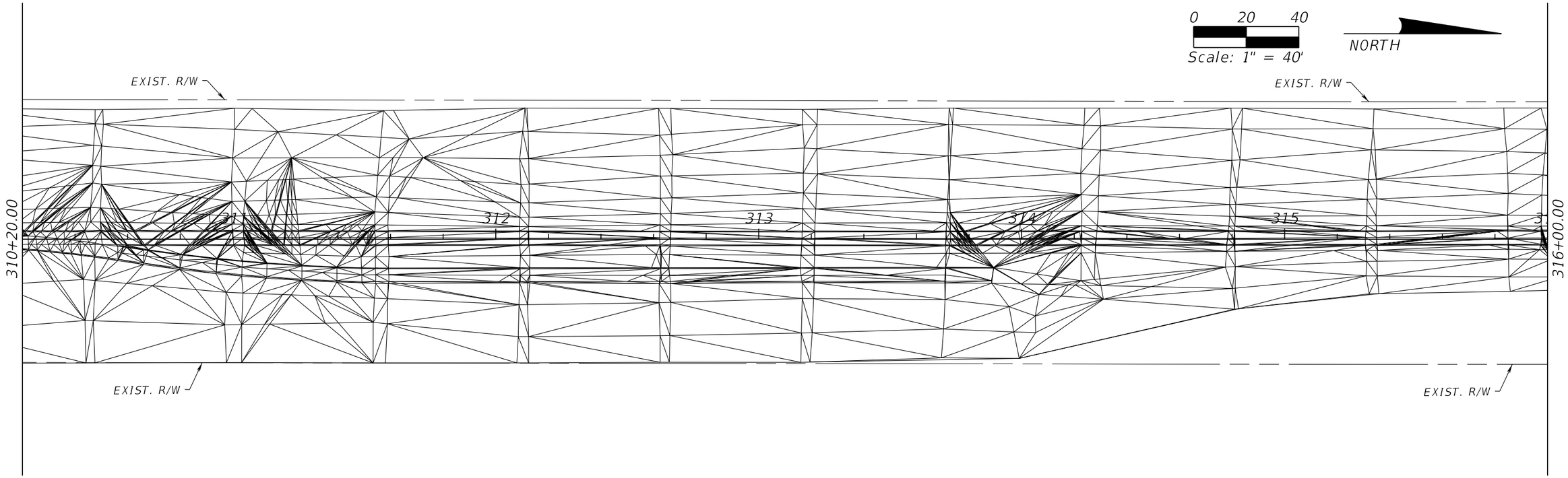

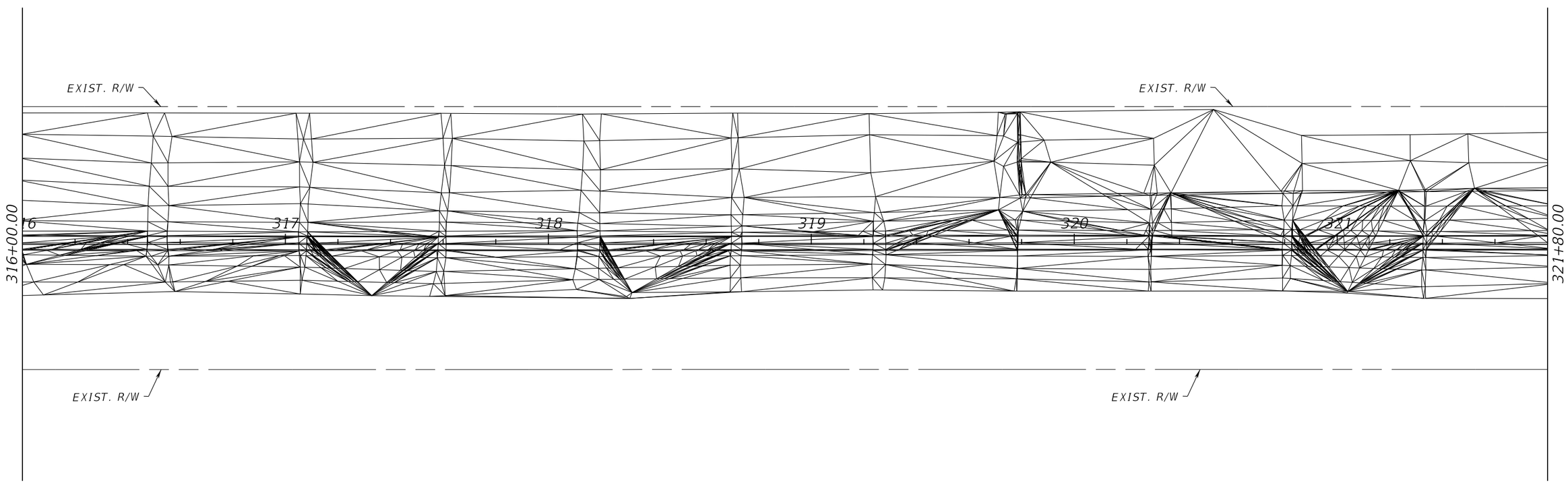

REVISIONS			
DATE	DESCRIPTION	DATE	DESCRIPTION

MAPS PREPARED BY:
CH PEREZ & ASSOCIATES CONSULTING ENGINEERS, INC
CERTIFICATE OF AUTHORIZATION NO. EB-25976 / LB-7360
9594 NW 41 STREET, SUITE 201
MIAMI, FLORIDA 33178
(305)592-1070 / FAX: (305)592-1078
FRANK L. NUNEZ, JR., PSM
P.S.M. LICENSE NO. 6382

LUDLAM TRAIL CORRIDOR PD&E STUDY

Miami-Dade County Parks, Recreation, and Open Spaces (MDPROS)	Hickman Building 275 NW 2nd Street Miami, FL 33128 305-755-7800	P&R CONTRACT NO. RFQ 786B P&R PROJECT NO. 43502-15-001-14470619

DTM

SHEET NO.
21

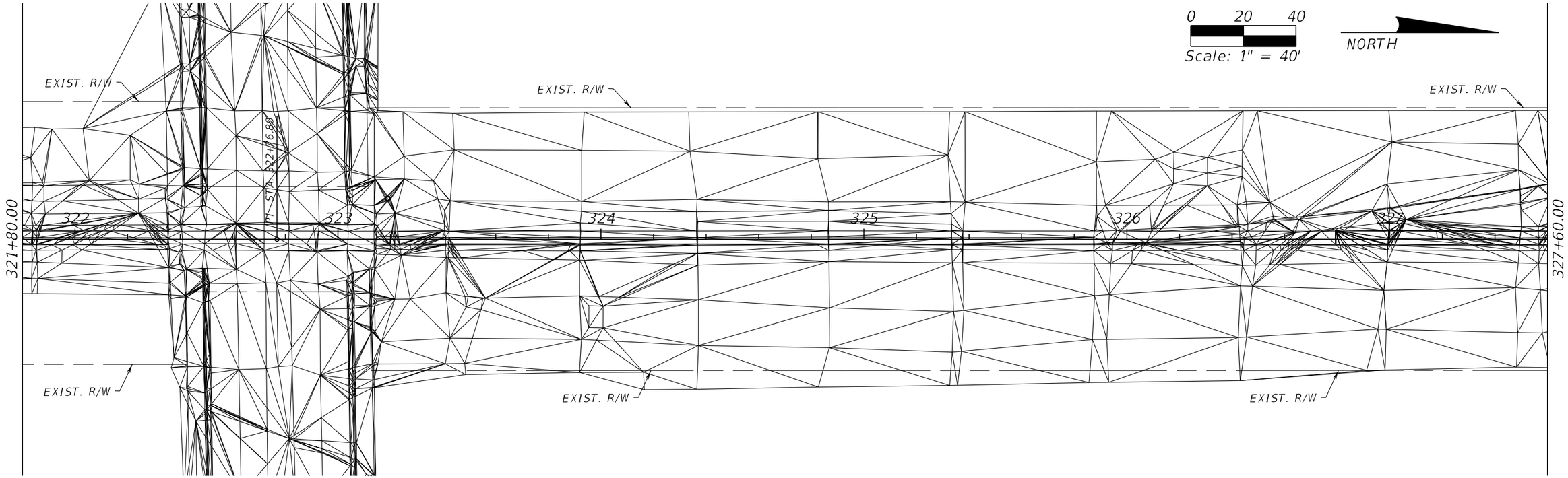

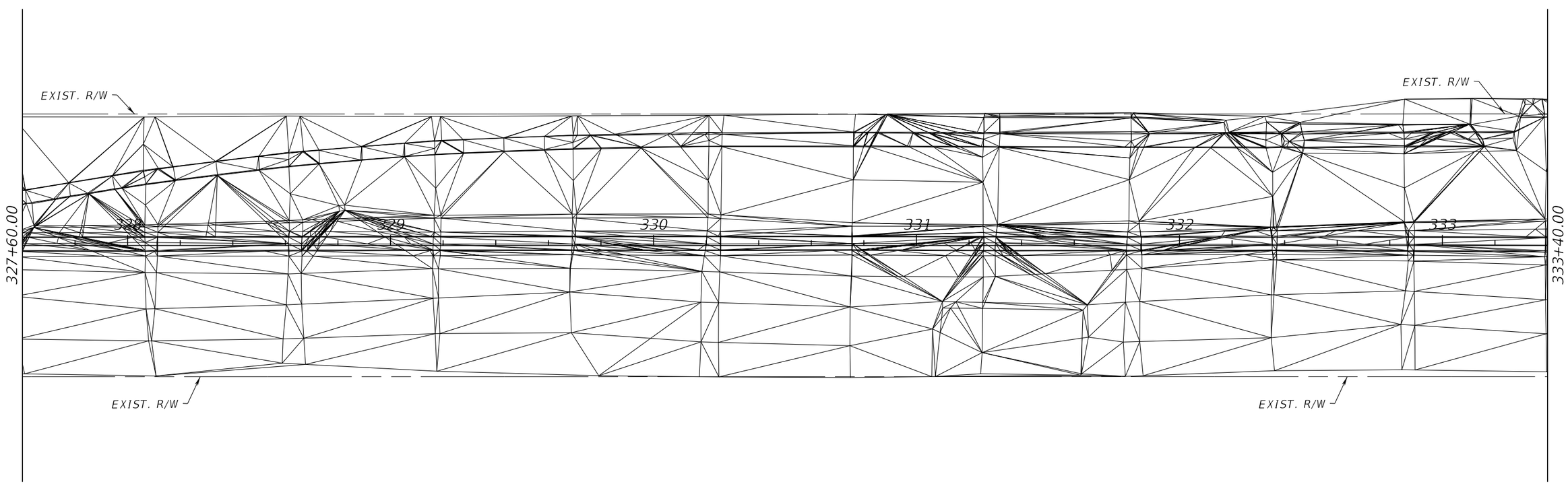

REVISIONS			
DATE	DESCRIPTION	DATE	DESCRIPTION

MAPS PREPARED BY:
CH PEREZ & ASSOCIATES CONSULTING ENGINEERS, INC
CERTIFICATE OF AUTHORIZATION NO. EB-25976 / LB-7360
9594 NW 41 STREET, SUITE 201
MIAMI, FLORIDA 33178
(305)592-1070 / FAX: (305)592-1078
FRANK L. NUNEZ, JR., PSM
P.S.M. LICENSE NO. 6382

LUDLAM TRAIL CORRIDOR PD&E STUDY

Miami-Dade County Parks, Recreation, and Open Spaces (MDPROS)	Hickman Building 275 NW 2nd Street Miami, FL 33128 305-755-7800	P&R CONTRACT NO. RFQ 786B P&R PROJECT NO. 43502-15-001-14470619

DTM

SHEET NO. 22

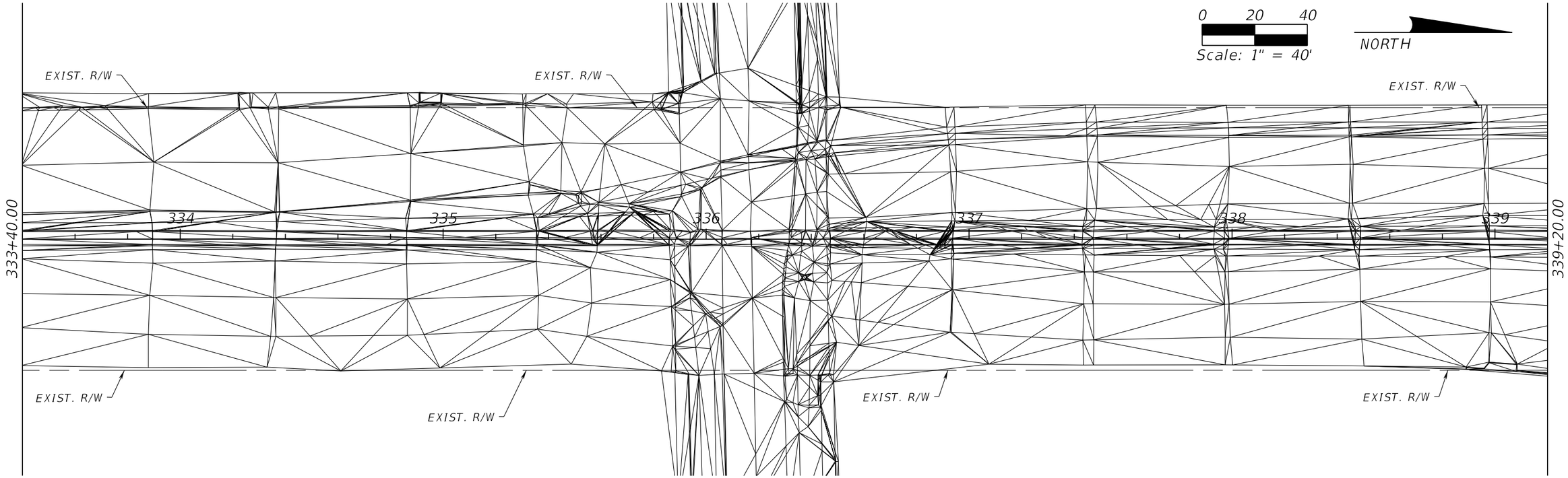

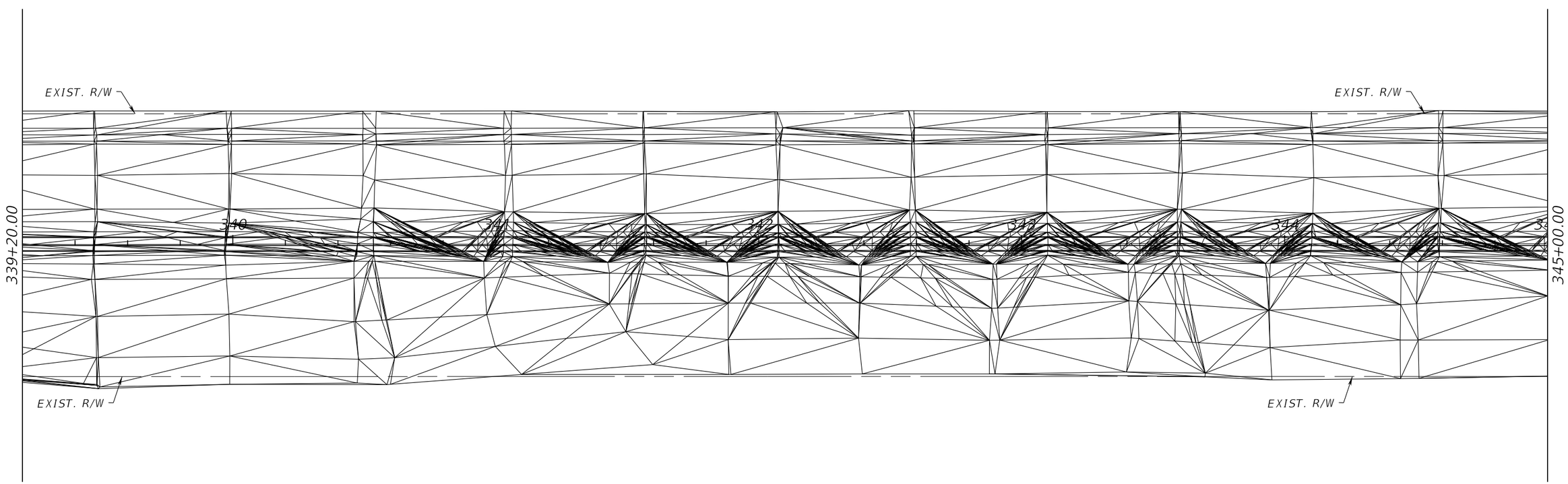

REVISIONS			
DATE	DESCRIPTION	DATE	DESCRIPTION

MAPS PREPARED BY:
CH PEREZ & ASSOCIATES CONSULTING ENGINEERS, INC
CERTIFICATE OF AUTHORIZATION NO. EB-25976 / LB-7360
9594 NW 41 STREET, SUITE 201
MIAMI, FLORIDA 33178
(305)592-1070 / FAX: (305)592-1078
FRANK L. NUNEZ, JR., PSM
P.S.M. LICENSE NO. 6382

LUDLAM TRAIL CORRIDOR PD&E STUDY

Miami-Dade County Parks, Recreation, and Open Spaces (MDPROS)	Hickman Building 275 NW 2nd Street Miami, FL 33128 305-755-7800	P&R CONTRACT NO. RFQ 786B P&R PROJECT NO. 43502-15-001-14470619

DTM

SHEET NO. 23

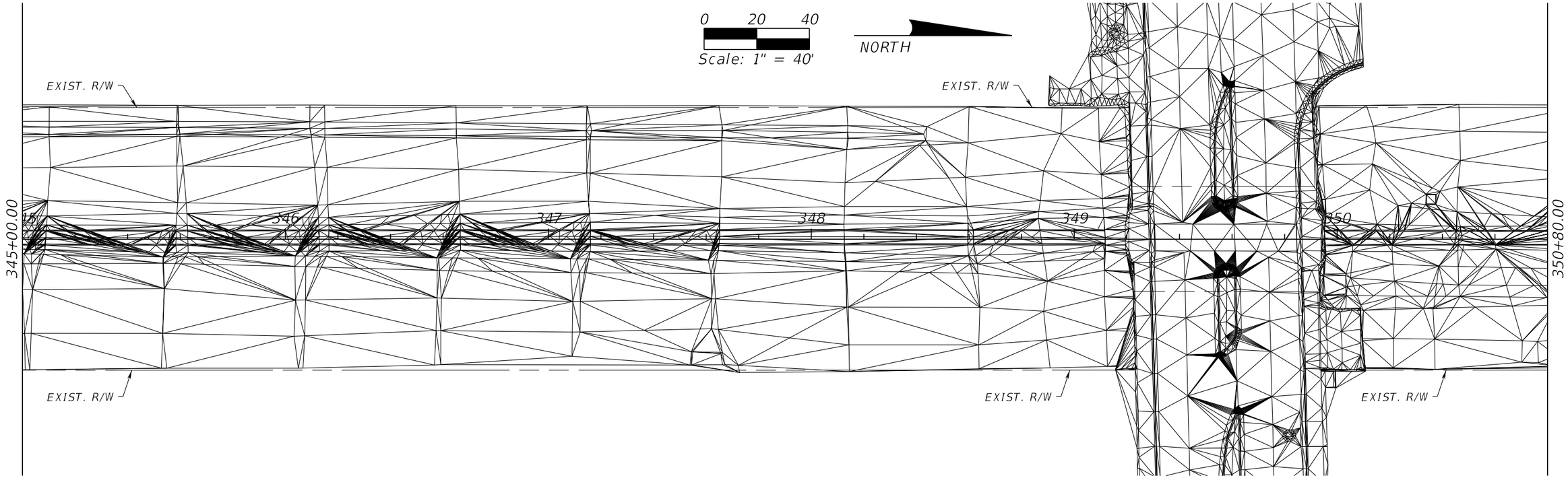

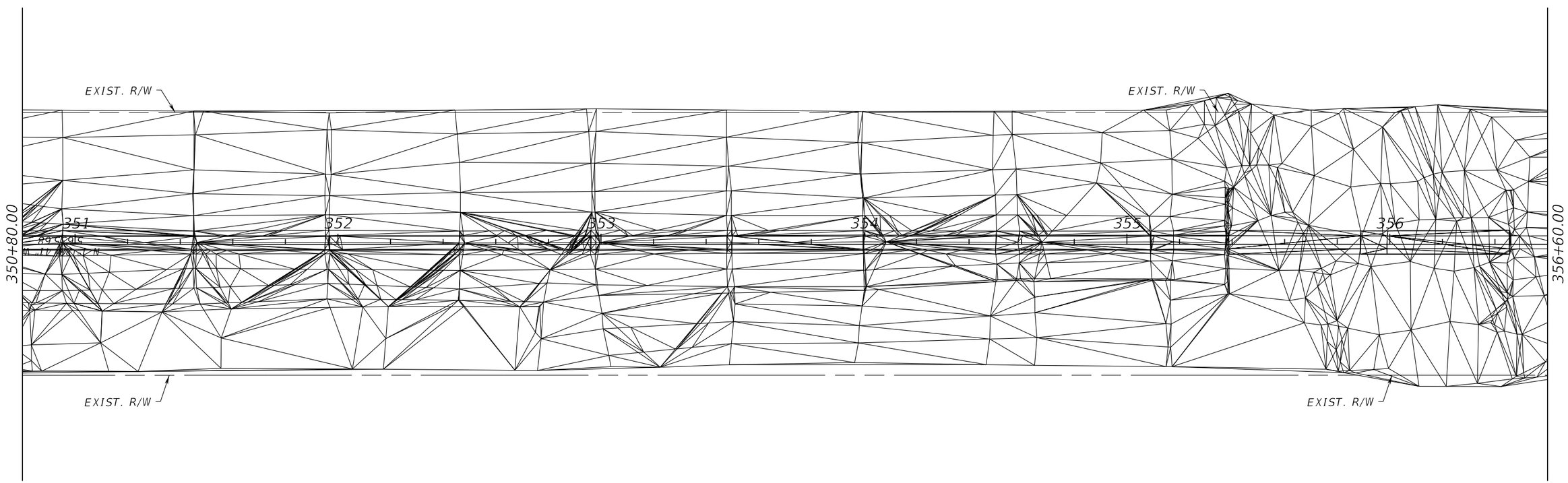

REVISIONS			
DATE	DESCRIPTION	DATE	DESCRIPTION

MAPS PREPARED BY:
CH PEREZ & ASSOCIATES CONSULTING ENGINEERS, INC
CERTIFICATE OF AUTHORIZATION NO. EB-25976 / LB-7360
9594 NW 41 STREET, SUITE 201
MIAMI, FLORIDA 33178
(305)592-1070 / FAX: (305)592-1078
FRANK L. NUNEZ, JR., PSM
P.S.M. LICENSE NO. 6382

LUDLAM TRAIL CORRIDOR PD&E STUDY

Miami-Dade County Parks, Recreation, and Open Spaces (MDPROS)	Hickman Building 275 NW 2nd Street Miami, FL 33128 305-755-7800	P&R CONTRACT NO. RFQ 786B P&R PROJECT NO. 43502-15-001-14470619

DTM

SHEET NO. 24

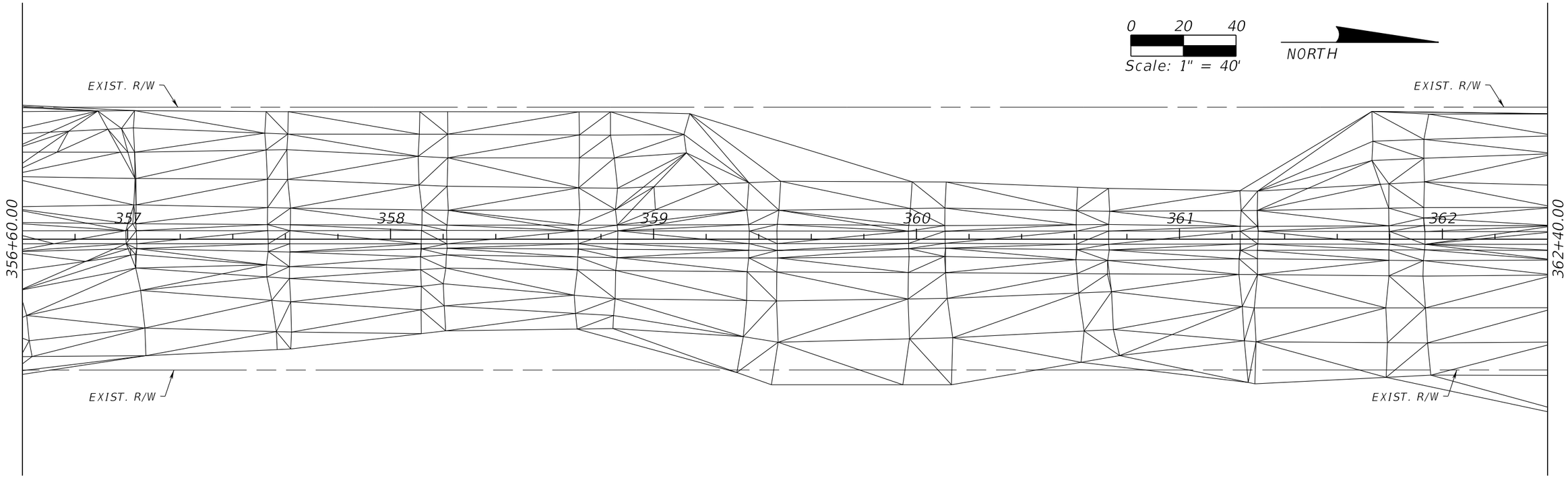

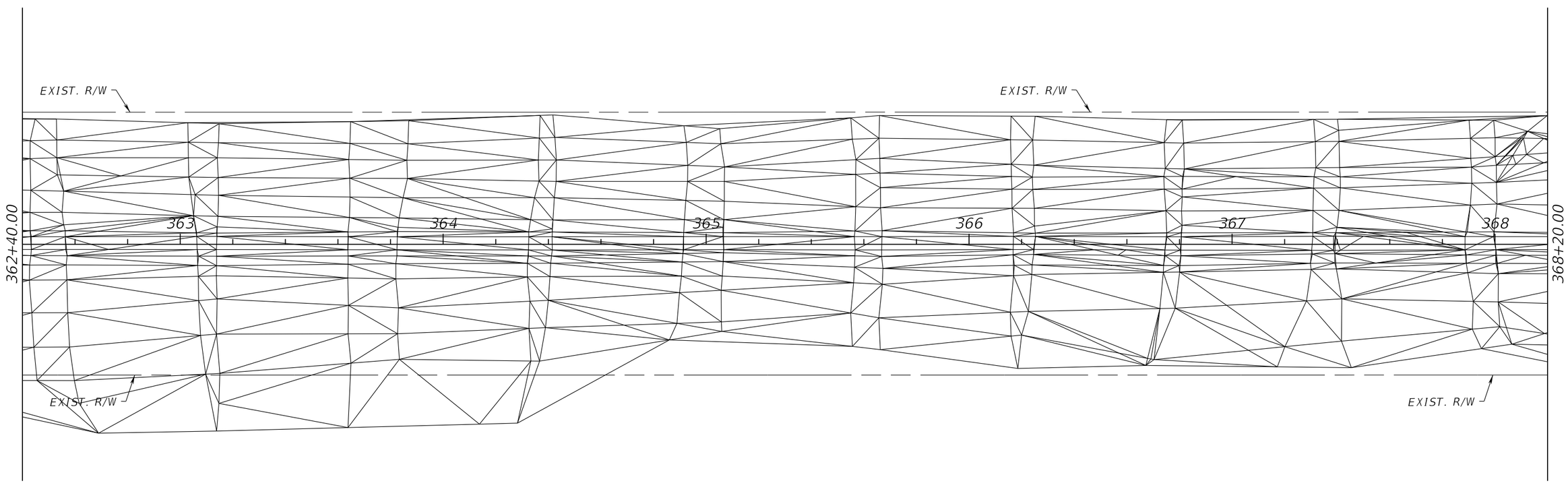

REVISIONS			
DATE	DESCRIPTION	DATE	DESCRIPTION

MAPS PREPARED BY:
CH PEREZ & ASSOCIATES CONSULTING ENGINEERS, INC
CERTIFICATE OF AUTHORIZATION NO. EB-25976 / LB-7360
9594 NW 41 STREET, SUITE 201
MIAMI, FLORIDA 33178
(305)592-1070 / FAX: (305)592-1078
FRANK L. NUNEZ, JR., PSM
P.S.M. LICENSE NO. 6382

LUDLAM TRAIL CORRIDOR PD&E STUDY

Miami-Dade County Parks, Recreation, and Open Spaces (MDPROS)	Hickman Building 275 NW 2nd Street Miami, FL 33128 305-755-7800	P&R CONTRACT NO. RFQ 786B P&R PROJECT NO. 43502-15-001-14470619

DTM

SHEET NO. 25

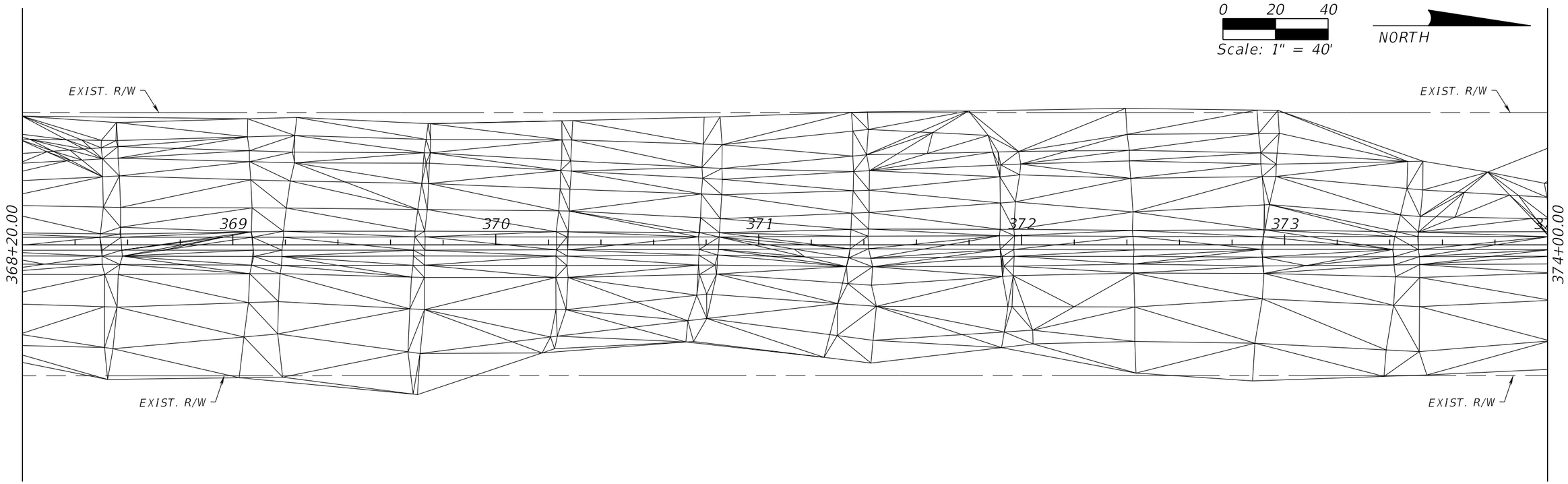

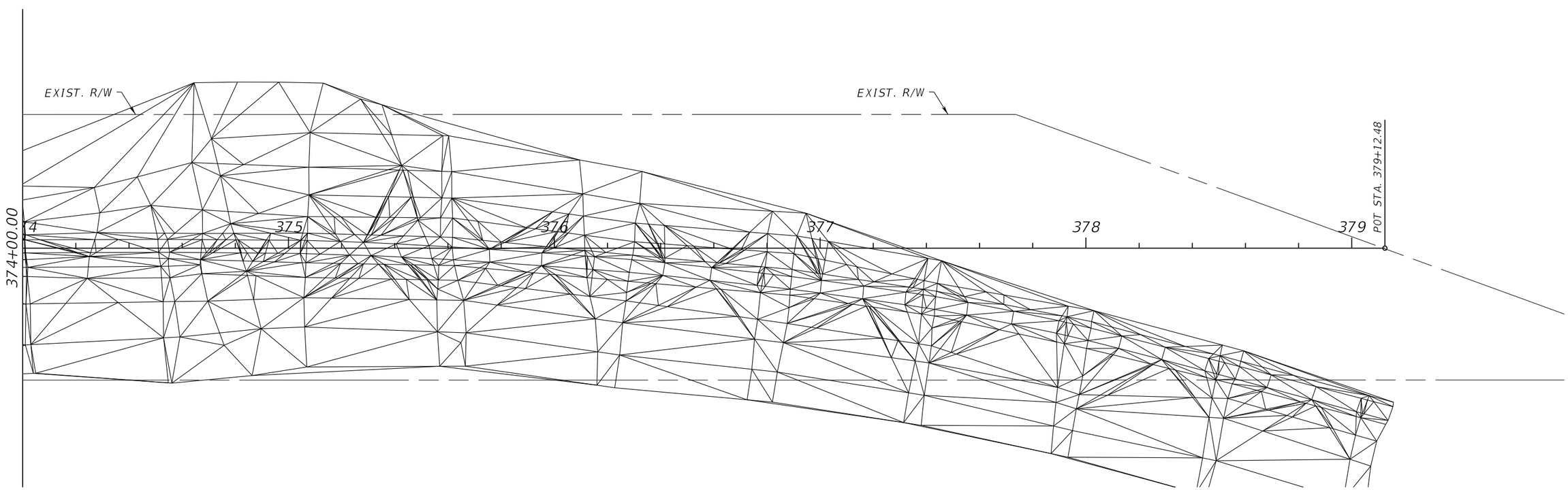

REVISIONS			
DATE	DESCRIPTION	DATE	DESCRIPTION

MAPS PREPARED BY:
CH PEREZ & ASSOCIATES CONSULTING ENGINEERS, INC
CERTIFICATE OF AUTHORIZATION NO. EB-25976 / LB-7360
9594 NW 41 STREET, SUITE 201
MIAMI, FLORIDA 33178
(305)592-1070 / FAX: (305)592-1078
FRANK L. NUNEZ, JR., PSM
P.S.M. LICENSE NO. 6382

LUDLAM TRAIL CORRIDOR PD&E STUDY

Miami-Dade County Parks, Recreation, and Open Spaces (MDPROS)	Hickman Building 275 NW 2nd Street Miami, FL 33128 305-755-7800	P&R CONTRACT NO. RFQ 786B P&R PROJECT NO. 43502-15-001-14470619

DTM

SHEET NO. 26

Volume Counts

Daily Vehicle Volume Report

Study Date: Tuesday, 09/18/2018
Unit ID: 0146
Location: SW 80TH ST / W OF SW 70TH AVE

	Eastbound Volume
00:00 - 00:14	6
00:15 - 00:29	6
00:30 - 00:44	3
00:45 - 00:59	5
01:00 - 01:14	5
01:15 - 01:29	3
01:30 - 01:44	5
01:45 - 01:59	2
02:00 - 02:14	3
02:15 - 02:29	1
02:30 - 02:44	2
02:45 - 02:59	2
03:00 - 03:14	3
03:15 - 03:29	4
03:30 - 03:44	5
03:45 - 03:59	4
04:00 - 04:14	3
04:15 - 04:29	5
04:30 - 04:44	7
04:45 - 04:59	4
05:00 - 05:14	9
05:15 - 05:29	22
05:30 - 05:44	20
05:45 - 05:59	36
06:00 - 06:14	38
06:15 - 06:29	65
06:30 - 06:44	74
06:45 - 06:59	126
07:00 - 07:14	120
07:15 - 07:29	120
07:30 - 07:44	134
07:45 - 07:59	145
08:00 - 08:14	100
08:15 - 08:29	112
08:30 - 08:44	135
08:45 - 08:59	147
09:00 - 09:14	100
09:15 - 09:29	90
09:30 - 09:44	84
09:45 - 09:59	81
10:00 - 10:14	50
10:15 - 10:29	66
10:30 - 10:44	48
10:45 - 10:59	57
11:00 - 11:14	49
11:15 - 11:29	47
11:30 - 11:44	41
11:45 - 11:59	51
12:00 - 12:14	67
12:15 - 12:29	56
12:30 - 12:44	56
12:45 - 12:59	56

Daily Vehicle Volume Report

Study Date: Tuesday, 09/18/2018
Unit ID: 0146
Location: SW 80TH ST / W OF SW 70TH AVE

	Eastbound Volume
13:00 - 13:14	48
13:15 - 13:29	52
13:30 - 13:44	53
13:45 - 13:59	57
14:00 - 14:14	57
14:15 - 14:29	50
14:30 - 14:44	64
14:45 - 14:59	66
15:00 - 15:14	80
15:15 - 15:29	60
15:30 - 15:44	72
15:45 - 15:59	61
16:00 - 16:14	61
16:15 - 16:29	66
16:30 - 16:44	76
16:45 - 16:59	65
17:00 - 17:14	70
17:15 - 17:29	59
17:30 - 17:44	57
17:45 - 17:59	89
18:00 - 18:14	66
18:15 - 18:29	73
18:30 - 18:44	55
18:45 - 18:59	45
19:00 - 19:14	43
19:15 - 19:29	47
19:30 - 19:44	33
19:45 - 19:59	45
20:00 - 20:14	47
20:15 - 20:29	36
20:30 - 20:44	39
20:45 - 20:59	26
21:00 - 21:14	35
21:15 - 21:29	20
21:30 - 21:44	30
21:45 - 21:59	22
22:00 - 22:14	15
22:15 - 22:29	18
22:30 - 22:44	12
22:45 - 22:59	14
23:00 - 23:14	15
23:15 - 23:29	9
23:30 - 23:44	8
23:45 - 23:59	6
Totals	**4502**
AM Peak Time	**07:03 - 08:02**
AM Peak Volume	**525**
PM Peak Time	**17:33 - 18:32**
PM Peak Volume	**291**

Daily Vehicle Volume Report

Study Date: Wednesday, 09/19/2018
Unit ID: 0146
Location: SW 80TH ST / W OF SW 70TH AVE

	Eastbound Volume
00:00 - 00:14	4
00:15 - 00:29	5
00:30 - 00:44	3
00:45 - 00:59	3
01:00 - 01:14	4
01:15 - 01:29	1
01:30 - 01:44	4
01:45 - 01:59	4
02:00 - 02:14	4
02:15 - 02:29	3
02:30 - 02:44	1
02:45 - 02:59	2
03:00 - 03:14	0
03:15 - 03:29	3
03:30 - 03:44	6
03:45 - 03:59	4
04:00 - 04:14	1
04:15 - 04:29	4
04:30 - 04:44	8
04:45 - 04:59	5
05:00 - 05:14	11
05:15 - 05:29	20
05:30 - 05:44	19
05:45 - 05:59	29
06:00 - 06:14	36
06:15 - 06:29	55
06:30 - 06:44	76
06:45 - 06:59	110
07:00 - 07:14	119
07:15 - 07:29	139
07:30 - 07:44	138
07:45 - 07:59	131
08:00 - 08:14	142
08:15 - 08:29	119
08:30 - 08:44	143
08:45 - 08:59	146
09:00 - 09:14	115
09:15 - 09:29	96
09:30 - 09:44	83
09:45 - 09:59	82
10:00 - 10:14	55
10:15 - 10:29	66
10:30 - 10:44	53
10:45 - 10:59	53
11:00 - 11:14	61
11:15 - 11:29	39
11:30 - 11:44	47
11:45 - 11:59	55
12:00 - 12:14	69
12:15 - 12:29	61
12:30 - 12:44	51
12:45 - 12:59	47

Daily Vehicle Volume Report

Study Date: Wednesday, 09/19/2018
Unit ID: 0146
Location: SW 80TH ST / W OF SW 70TH AVE

	Eastbound Volume
13:00 - 13:14	75
13:15 - 13:29	63
13:30 - 13:44	45
13:45 - 13:59	56
14:00 - 14:14	53
14:15 - 14:29	52
14:30 - 14:44	60
14:45 - 14:59	72
15:00 - 15:14	67
15:15 - 15:29	66
15:30 - 15:44	64
15:45 - 15:59	47
16:00 - 16:14	49
16:15 - 16:29	59
16:30 - 16:44	58
16:45 - 16:59	70
17:00 - 17:14	66
17:15 - 17:29	68
17:30 - 17:44	66
17:45 - 17:59	64
18:00 - 18:14	72
18:15 - 18:29	55
18:30 - 18:44	57
18:45 - 18:59	49
19:00 - 19:14	49
19:15 - 19:29	56
19:30 - 19:44	41
19:45 - 19:59	43
20:00 - 20:14	41
20:15 - 20:29	47
20:30 - 20:44	31
20:45 - 20:59	32
21:00 - 21:14	25
21:15 - 21:29	29
21:30 - 21:44	29
21:45 - 21:59	20
22:00 - 22:14	18
22:15 - 22:29	15
22:30 - 22:44	21
22:45 - 22:59	9
23:00 - 23:14	9
23:15 - 23:29	12
23:30 - 23:44	10
23:45 - 23:59	4
Totals	**4529**
AM Peak Time	**07:56 - 08:55**
AM Peak Volume	**564**
PM Peak Time	**14:36 - 15:35**
PM Peak Volume	**277**

Daily Vehicle Volume Report

Study Date: Thursday, 09/20/2018
Unit ID: 0146
Location: SW 80TH ST / W OF SW 70TH AVE

	Eastbound Volume
00:00 - 00:14	8
00:15 - 00:29	5
00:30 - 00:44	4
00:45 - 00:59	1
01:00 - 01:14	8
01:15 - 01:29	2
01:30 - 01:44	3
01:45 - 01:59	4
02:00 - 02:14	4
02:15 - 02:29	2
02:30 - 02:44	2
02:45 - 02:59	2
03:00 - 03:14	1
03:15 - 03:29	2
03:30 - 03:44	3
03:45 - 03:59	2
04:00 - 04:14	1
04:15 - 04:29	5
04:30 - 04:44	7
04:45 - 04:59	6
05:00 - 05:14	7
05:15 - 05:29	23
05:30 - 05:44	18
05:45 - 05:59	31
06:00 - 06:14	51
06:15 - 06:29	58
06:30 - 06:44	78
06:45 - 06:59	113
07:00 - 07:14	143
07:15 - 07:29	135
07:30 - 07:44	132
07:45 - 07:59	119
08:00 - 08:14	135
08:15 - 08:29	138
08:30 - 08:44	115
08:45 - 08:59	124
09:00 - 09:14	88
09:15 - 09:29	91
09:30 - 09:44	69
09:45 - 09:59	81
10:00 - 10:14	67
10:15 - 10:29	59
10:30 - 10:44	64
10:45 - 10:59	61
11:00 - 11:14	51
11:15 - 11:29	50
11:30 - 11:44	55
11:45 - 11:59	59
12:00 - 12:14	55
12:15 - 12:29	45
12:30 - 12:44	49
12:45 - 12:59	53

Daily Vehicle Volume Report

Study Date: Thursday, 09/20/2018
Unit ID: 0146
Location: SW 80TH ST / W OF SW 70TH AVE

	Eastbound Volume
13:00 - 13:14	59
13:15 - 13:29	59
13:30 - 13:44	60
13:45 - 13:59	57
14:00 - 14:14	46
14:15 - 14:29	63
14:30 - 14:44	64
14:45 - 14:59	81
15:00 - 15:14	59
15:15 - 15:29	66
15:30 - 15:44	73
15:45 - 15:59	76
16:00 - 16:14	61
16:15 - 16:29	66
16:30 - 16:44	72
16:45 - 16:59	56
17:00 - 17:14	80
17:15 - 17:29	62
17:30 - 17:44	62
17:45 - 17:59	73
18:00 - 18:14	82
18:15 - 18:29	65
18:30 - 18:44	66
18:45 - 18:59	45
19:00 - 19:14	43
19:15 - 19:29	43
19:30 - 19:44	40
19:45 - 19:59	46
20:00 - 20:14	31
20:15 - 20:29	50
20:30 - 20:44	40
20:45 - 20:59	25
21:00 - 21:14	22
21:15 - 21:29	34
21:30 - 21:44	18
21:45 - 21:59	22
22:00 - 22:14	12
22:15 - 22:29	14
22:30 - 22:44	12
22:45 - 22:59	4
23:00 - 23:14	9
23:15 - 23:29	5
23:30 - 23:44	6
23:45 - 23:59	9
Totals	**4527**
AM Peak Time	**07:08 - 08:07**
AM Peak Volume	**541**
PM Peak Time	**17:22 - 18:21**
PM Peak Volume	**290**

Daily Vehicle Volume Report

Study Date: Tuesday, 09/18/2018
Unit ID: 0204
Location: SW 80TH ST / W OF SW 70TH AVE

	Westbound Volume
00:00 - 00:14	5
00:15 - 00:29	9
00:30 - 00:44	12
00:45 - 00:59	4
01:00 - 01:14	6
01:15 - 01:29	3
01:30 - 01:44	3
01:45 - 01:59	4
02:00 - 02:14	6
02:15 - 02:29	4
02:30 - 02:44	2
02:45 - 02:59	1
03:00 - 03:14	3
03:15 - 03:29	2
03:30 - 03:44	2
03:45 - 03:59	3
04:00 - 04:14	0
04:15 - 04:29	2
04:30 - 04:44	5
04:45 - 04:59	2
05:00 - 05:14	3
05:15 - 05:29	4
05:30 - 05:44	7
05:45 - 05:59	8
06:00 - 06:14	19
06:15 - 06:29	32
06:30 - 06:44	47
06:45 - 06:59	51
07:00 - 07:14	60
07:15 - 07:29	43
07:30 - 07:44	49
07:45 - 07:59	62
08:00 - 08:14	60
08:15 - 08:29	94
08:30 - 08:44	59
08:45 - 08:59	59
09:00 - 09:14	60
09:15 - 09:29	47
09:30 - 09:44	62
09:45 - 09:59	44
10:00 - 10:14	55
10:15 - 10:29	64
10:30 - 10:44	55
10:45 - 10:59	61
11:00 - 11:14	63
11:15 - 11:29	67
11:30 - 11:44	53
11:45 - 11:59	53
12:00 - 12:14	76
12:15 - 12:29	69
12:30 - 12:44	86
12:45 - 12:59	86

Daily Vehicle Volume Report

Study Date: Tuesday, 09/18/2018
Unit ID: 0204
Location: SW 80TH ST / W OF SW 70TH AVE

	Westbound Volume
13:00 - 13:14	98
13:15 - 13:29	90
13:30 - 13:44	88
13:45 - 13:59	101
14:00 - 14:14	90
14:15 - 14:29	95
14:30 - 14:44	94
14:45 - 14:59	104
15:00 - 15:14	117
15:15 - 15:29	136
15:30 - 15:44	145
15:45 - 15:59	116
16:00 - 16:14	147
16:15 - 16:29	147
16:30 - 16:44	193
16:45 - 16:59	178
17:00 - 17:14	161
17:15 - 17:29	166
17:30 - 17:44	193
17:45 - 17:59	183
18:00 - 18:14	133
18:15 - 18:29	158
18:30 - 18:44	142
18:45 - 18:59	135
19:00 - 19:14	123
19:15 - 19:29	124
19:30 - 19:44	119
19:45 - 19:59	104
20:00 - 20:14	101
20:15 - 20:29	93
20:30 - 20:44	71
20:45 - 20:59	87
21:00 - 21:14	78
21:15 - 21:29	73
21:30 - 21:44	63
21:45 - 21:59	40
22:00 - 22:14	50
22:15 - 22:29	47
22:30 - 22:44	28
22:45 - 22:59	18
23:00 - 23:14	25
23:15 - 23:29	15
23:30 - 23:44	19
23:45 - 23:59	19
Totals	**6243**
AM Peak Time	**08:06 - 09:05**
AM Peak Volume	**283**
PM Peak Time	**17:04 - 18:03**
PM Peak Volume	**715**

Daily Vehicle Volume Report

Study Date: Wednesday, 09/19/2018
Unit ID: 0204
Location: SW 80TH ST / W OF SW 70TH AVE

	Westbound Volume
00:00 - 00:14	17
00:15 - 00:29	10
00:30 - 00:44	16
00:45 - 00:59	11
01:00 - 01:14	10
01:15 - 01:29	6
01:30 - 01:44	4
01:45 - 01:59	9
02:00 - 02:14	4
02:15 - 02:29	2
02:30 - 02:44	4
02:45 - 02:59	3
03:00 - 03:14	3
03:15 - 03:29	2
03:30 - 03:44	2
03:45 - 03:59	4
04:00 - 04:14	2
04:15 - 04:29	1
04:30 - 04:44	2
04:45 - 04:59	2
05:00 - 05:14	5
05:15 - 05:29	7
05:30 - 05:44	7
05:45 - 05:59	12
06:00 - 06:14	14
06:15 - 06:29	21
06:30 - 06:44	28
06:45 - 06:59	34
07:00 - 07:14	46
07:15 - 07:29	48
07:30 - 07:44	55
07:45 - 07:59	62
08:00 - 08:14	56
08:15 - 08:29	55
08:30 - 08:44	49
08:45 - 08:59	53
09:00 - 09:14	54
09:15 - 09:29	44
09:30 - 09:44	43
09:45 - 09:59	61
10:00 - 10:14	49
10:15 - 10:29	50
10:30 - 10:44	60
10:45 - 10:59	56
11:00 - 11:14	78
11:15 - 11:29	83
11:30 - 11:44	67
11:45 - 11:59	75
12:00 - 12:14	86
12:15 - 12:29	79
12:30 - 12:44	78
12:45 - 12:59	90

Daily Vehicle Volume Report

Study Date: Wednesday, 09/19/2018
Unit ID: 0204
Location: SW 80TH ST / W OF SW 70TH AVE

	Westbound Volume
13:00 - 13:14	88
13:15 - 13:29	88
13:30 - 13:44	101
13:45 - 13:59	92
14:00 - 14:14	102
14:15 - 14:29	119
14:30 - 14:44	112
14:45 - 14:59	101
15:00 - 15:14	117
15:15 - 15:29	134
15:30 - 15:44	112
15:45 - 15:59	115
16:00 - 16:14	104
16:15 - 16:29	152
16:30 - 16:44	160
16:45 - 16:59	147
17:00 - 17:14	169
17:15 - 17:29	147
17:30 - 17:44	173
17:45 - 17:59	171
18:00 - 18:14	164
18:15 - 18:29	127
18:30 - 18:44	127
18:45 - 18:59	131
19:00 - 19:14	134
19:15 - 19:29	121
19:30 - 19:44	111
19:45 - 19:59	96
20:00 - 20:14	104
20:15 - 20:29	93
20:30 - 20:44	90
20:45 - 20:59	66
21:00 - 21:14	72
21:15 - 21:29	78
21:30 - 21:44	43
21:45 - 21:59	37
22:00 - 22:14	46
22:15 - 22:29	48
22:30 - 22:44	43
22:45 - 22:59	27
23:00 - 23:14	25
23:15 - 23:29	28
23:30 - 23:44	20
23:45 - 23:59	17
Totals	**6071**
AM Peak Time	**11:00 - 11:59**
AM Peak Volume	**303**
PM Peak Time	**17:06 - 18:05**
PM Peak Volume	**670**

Daily Vehicle Volume Report

Study Date: Thursday, 09/20/2018
Unit ID: 0204
Location: SW 80TH ST / W OF SW 70TH AVE

	Westbound Volume
00:00 - 00:14	8
00:15 - 00:29	18
00:30 - 00:44	3
00:45 - 00:59	8
01:00 - 01:14	5
01:15 - 01:29	12
01:30 - 01:44	7
01:45 - 01:59	3
02:00 - 02:14	4
02:15 - 02:29	3
02:30 - 02:44	1
02:45 - 02:59	2
03:00 - 03:14	4
03:15 - 03:29	3
03:30 - 03:44	1
03:45 - 03:59	2
04:00 - 04:14	1
04:15 - 04:29	2
04:30 - 04:44	2
04:45 - 04:59	5
05:00 - 05:14	2
05:15 - 05:29	7
05:30 - 05:44	5
05:45 - 05:59	7
06:00 - 06:14	17
06:15 - 06:29	29
06:30 - 06:44	53
06:45 - 06:59	53
07:00 - 07:14	50
07:15 - 07:29	57
07:30 - 07:44	59
07:45 - 07:59	72
08:00 - 08:14	61
08:15 - 08:29	87
08:30 - 08:44	69
08:45 - 08:59	60
09:00 - 09:14	68
09:15 - 09:29	52
09:30 - 09:44	55
09:45 - 09:59	58
10:00 - 10:14	57
10:15 - 10:29	65
10:30 - 10:44	60
10:45 - 10:59	46
11:00 - 11:14	69
11:15 - 11:29	75
11:30 - 11:44	66
11:45 - 11:59	58
12:00 - 12:14	85
12:15 - 12:29	82
12:30 - 12:44	76
12:45 - 12:59	89

Daily Vehicle Volume Report

Study Date: Thursday, 09/20/2018
Unit ID: 0204
Location: SW 80TH ST / W OF SW 70TH AVE

	Westbound Volume
13:00 - 13:14	88
13:15 - 13:29	91
13:30 - 13:44	81
13:45 - 13:59	85
14:00 - 14:14	103
14:15 - 14:29	110
14:30 - 14:44	111
14:45 - 14:59	113
15:00 - 15:14	134
15:15 - 15:29	140
15:30 - 15:44	174
15:45 - 15:59	162
16:00 - 16:14	144
16:15 - 16:29	160
16:30 - 16:44	161
16:45 - 16:59	148
17:00 - 17:14	198
17:15 - 17:29	157
17:30 - 17:44	151
17:45 - 17:59	192
18:00 - 18:14	162
18:15 - 18:29	139
18:30 - 18:44	147
18:45 - 18:59	130
19:00 - 19:14	141
19:15 - 19:29	117
19:30 - 19:44	121
19:45 - 19:59	112
20:00 - 20:14	95
20:15 - 20:29	104
20:30 - 20:44	85
20:45 - 20:59	76
21:00 - 21:14	66
21:15 - 21:29	88
21:30 - 21:44	61
21:45 - 21:59	40
22:00 - 22:14	52
22:15 - 22:29	44
22:30 - 22:44	31
22:45 - 22:59	30
23:00 - 23:14	18
23:15 - 23:29	23
23:30 - 23:44	21
23:45 - 23:59	18
Totals	**6467**
AM Peak Time	**07:41 - 08:40**
AM Peak Volume	**296**
PM Peak Time	**17:00 - 17:59**
PM Peak Volume	**698**

Daily Vehicle Volume Report

Study Date: Tuesday, 09/25/2018
Unit ID: 0075
Location: SW 72ND ST / E OF SW 70TH AVE

	Eastbound Volume
00:00 - 00:14	19
00:15 - 00:29	15
00:30 - 00:44	19
00:45 - 00:59	9
01:00 - 01:14	10
01:15 - 01:29	12
01:30 - 01:44	8
01:45 - 01:59	4
02:00 - 02:14	2
02:15 - 02:29	10
02:30 - 02:44	11
02:45 - 02:59	6
03:00 - 03:14	9
03:15 - 03:29	12
03:30 - 03:44	6
03:45 - 03:59	10
04:00 - 04:14	7
04:15 - 04:29	12
04:30 - 04:44	22
04:45 - 04:59	37
05:00 - 05:14	52
05:15 - 05:29	68
05:30 - 05:44	115
05:45 - 05:59	174
06:00 - 06:14	220
06:15 - 06:29	373
06:30 - 06:44	404
06:45 - 06:59	471
07:00 - 07:14	428
07:15 - 07:29	403
07:30 - 07:44	446
07:45 - 07:59	347
08:00 - 08:14	357
08:15 - 08:29	388
08:30 - 08:44	337
08:45 - 08:59	417
09:00 - 09:14	432
09:15 - 09:29	407
09:30 - 09:44	396
09:45 - 09:59	373
10:00 - 10:14	335
10:15 - 10:29	286
10:30 - 10:44	316
10:45 - 10:59	250
11:00 - 11:14	272
11:15 - 11:29	249
11:30 - 11:44	232
11:45 - 11:59	220
12:00 - 12:14	241
12:15 - 12:29	252
12:30 - 12:44	293
12:45 - 12:59	260

Daily Vehicle Volume Report

Study Date: Tuesday, 09/25/2018
Unit ID: 0075
Location: SW 72ND ST / E OF SW 70TH AVE

	Eastbound Volume
13:00 - 13:14	254
13:15 - 13:29	262
13:30 - 13:44	271
13:45 - 13:59	264
14:00 - 14:14	229
14:15 - 14:29	259
14:30 - 14:44	283
14:45 - 14:59	255
15:00 - 15:14	261
15:15 - 15:29	222
15:30 - 15:44	228
15:45 - 15:59	251
16:00 - 16:14	266
16:15 - 16:29	197
16:30 - 16:44	208
16:45 - 16:59	188
17:00 - 17:14	181
17:15 - 17:29	204
17:30 - 17:44	192
17:45 - 17:59	246
18:00 - 18:14	218
18:15 - 18:29	209
18:30 - 18:44	230
18:45 - 18:59	194
19:00 - 19:14	210
19:15 - 19:29	170
19:30 - 19:44	120
19:45 - 19:59	131
20:00 - 20:14	135
20:15 - 20:29	116
20:30 - 20:44	126
20:45 - 20:59	113
21:00 - 21:14	104
21:15 - 21:29	112
21:30 - 21:44	107
21:45 - 21:59	69
22:00 - 22:14	70
22:15 - 22:29	85
22:30 - 22:44	52
22:45 - 22:59	70
23:00 - 23:14	39
23:15 - 23:29	33
23:30 - 23:44	33
23:45 - 23:59	34
Totals	**17555**
AM Peak Time	**06:40 - 07:39**
AM Peak Volume	**1756**
PM Peak Time	**12:27 - 13:26**
PM Peak Volume	**1085**

Daily Vehicle Volume Report

Study Date: Wednesday, 09/26/2018
Unit ID: 0075
Location: SW 72ND ST / E OF SW 70TH AVE

	Eastbound Volume
00:00 - 00:14	19
00:15 - 00:29	21
00:30 - 00:44	19
00:45 - 00:59	15
01:00 - 01:14	12
01:15 - 01:29	14
01:30 - 01:44	9
01:45 - 01:59	6
02:00 - 02:14	4
02:15 - 02:29	6
02:30 - 02:44	8
02:45 - 02:59	7
03:00 - 03:14	5
03:15 - 03:29	8
03:30 - 03:44	4
03:45 - 03:59	10
04:00 - 04:14	10
04:15 - 04:29	14
04:30 - 04:44	22
04:45 - 04:59	49
05:00 - 05:14	51
05:15 - 05:29	66
05:30 - 05:44	137
05:45 - 05:59	163
06:00 - 06:14	240
06:15 - 06:29	295
06:30 - 06:44	402
06:45 - 06:59	481
07:00 - 07:14	459
07:15 - 07:29	469
07:30 - 07:44	381
07:45 - 07:59	374
08:00 - 08:14	360
08:15 - 08:29	362
08:30 - 08:44	376
08:45 - 08:59	427
09:00 - 09:14	365
09:15 - 09:29	340
09:30 - 09:44	348
09:45 - 09:59	397
10:00 - 10:14	340
10:15 - 10:29	280
10:30 - 10:44	327
10:45 - 10:59	307
11:00 - 11:14	285
11:15 - 11:29	255
11:30 - 11:44	260
11:45 - 11:59	246
12:00 - 12:14	236
12:15 - 12:29	256
12:30 - 12:44	268
12:45 - 12:59	255

Daily Vehicle Volume Report

Study Date: Wednesday, 09/26/2018
Unit ID: 0075
Location: SW 72ND ST / E OF SW 70TH AVE

	Eastbound Volume
13:00 - 13:14	292
13:15 - 13:29	254
13:30 - 13:44	273
13:45 - 13:59	245
14:00 - 14:14	238
14:15 - 14:29	248
14:30 - 14:44	275
14:45 - 14:59	290
15:00 - 15:14	248
15:15 - 15:29	254
15:30 - 15:44	247
15:45 - 15:59	247
16:00 - 16:14	212
16:15 - 16:29	228
16:30 - 16:44	221
16:45 - 16:59	199
17:00 - 17:14	222
17:15 - 17:29	189
17:30 - 17:44	201
17:45 - 17:59	214
18:00 - 18:14	176
18:15 - 18:29	208
18:30 - 18:44	254
18:45 - 18:59	213
19:00 - 19:14	171
19:15 - 19:29	176
19:30 - 19:44	153
19:45 - 19:59	154
20:00 - 20:14	146
20:15 - 20:29	117
20:30 - 20:44	112
20:45 - 20:59	114
21:00 - 21:14	102
21:15 - 21:29	91
21:30 - 21:44	79
21:45 - 21:59	92
22:00 - 22:14	77
22:15 - 22:29	71
22:30 - 22:44	97
22:45 - 22:59	67
23:00 - 23:14	69
23:15 - 23:29	54
23:30 - 23:44	48
23:45 - 23:59	44
Totals	**17752**
AM Peak Time	**06:36 - 07:35**
AM Peak Volume	**1831**
PM Peak Time	**12:55 - 13:54**
PM Peak Volume	**1083**

Daily Vehicle Volume Report

Study Date: Thursday, 09/27/2018
Unit ID: 0084
Location: SW 72ND ST / E OF SW 70TH AVE

	Eastbound Volume
00:00 - 00:14	16
00:15 - 00:29	13
00:30 - 00:44	9
00:45 - 00:59	16
01:00 - 01:14	8
01:15 - 01:29	12
01:30 - 01:44	6
01:45 - 01:59	8
02:00 - 02:14	10
02:15 - 02:29	2
02:30 - 02:44	8
02:45 - 02:59	7
03:00 - 03:14	4
03:15 - 03:29	8
03:30 - 03:44	6
03:45 - 03:59	7
04:00 - 04:14	10
04:15 - 04:29	18
04:30 - 04:44	10
04:45 - 04:59	39
05:00 - 05:14	30
05:15 - 05:29	61
05:30 - 05:44	77
05:45 - 05:59	125
06:00 - 06:14	156
06:15 - 06:29	205
06:30 - 06:44	262
06:45 - 06:59	483
07:00 - 07:14	452
07:15 - 07:29	428
07:30 - 07:44	280
07:45 - 07:59	257
08:00 - 08:14	264
08:15 - 08:29	319
08:30 - 08:44	331
08:45 - 08:59	389
09:00 - 09:14	421
09:15 - 09:29	377
09:30 - 09:44	345
09:45 - 09:59	316
10:00 - 10:14	300
10:15 - 10:29	266
10:30 - 10:44	286
10:45 - 10:59	268
11:00 - 11:14	272
11:15 - 11:29	255
11:30 - 11:44	266
11:45 - 11:59	252
12:00 - 12:14	232
12:15 - 12:29	227
12:30 - 12:44	255
12:45 - 12:59	240

Daily Vehicle Volume Report

Study Date: Thursday, 09/27/2018
Unit ID: 0084
Location: SW 72ND ST / E OF SW 70TH AVE

	Eastbound Volume
13:00 - 13:14	261
13:15 - 13:29	241
13:30 - 13:44	271
13:45 - 13:59	270
14:00 - 14:14	270
14:15 - 14:29	260
14:30 - 14:44	275
14:45 - 14:59	261
15:00 - 15:14	193
15:15 - 15:29	228
15:30 - 15:44	246
15:45 - 15:59	238
16:00 - 16:14	210
16:15 - 16:29	166
16:30 - 16:44	210
16:45 - 16:59	195
17:00 - 17:14	194
17:15 - 17:29	195
17:30 - 17:44	220
17:45 - 17:59	193
18:00 - 18:14	206
18:15 - 18:29	193
18:30 - 18:44	227
18:45 - 18:59	209
19:00 - 19:14	165
19:15 - 19:29	167
19:30 - 19:44	141
19:45 - 19:59	161
20:00 - 20:14	120
20:15 - 20:29	109
20:30 - 20:44	118
20:45 - 20:59	126
21:00 - 21:14	88
21:15 - 21:29	96
21:30 - 21:44	62
21:45 - 21:59	87
22:00 - 22:14	61
22:15 - 22:29	65
22:30 - 22:44	65
22:45 - 22:59	38
23:00 - 23:14	37
23:15 - 23:29	34
23:30 - 23:44	24
23:45 - 23:59	22
Totals	**16132**
AM Peak Time	**06:42 - 07:41**
AM Peak Volume	**1672**
PM Peak Time	**13:41 - 14:40**
PM Peak Volume	**1093**

Daily Vehicle Volume Report

Study Date: Tuesday, 09/25/2018
Unit ID: 0167
Location: SW 72ND ST / E OF SW 70TH AVE

	Westbound Volume
00:00 - 00:14	53
00:15 - 00:29	26
00:30 - 00:44	26
00:45 - 00:59	20
01:00 - 01:14	19
01:15 - 01:29	15
01:30 - 01:44	17
01:45 - 01:59	9
02:00 - 02:14	11
02:15 - 02:29	6
02:30 - 02:44	13
02:45 - 02:59	12
03:00 - 03:14	7
03:15 - 03:29	17
03:30 - 03:44	10
03:45 - 03:59	10
04:00 - 04:14	6
04:15 - 04:29	3
04:30 - 04:44	5
04:45 - 04:59	7
05:00 - 05:14	21
05:15 - 05:29	21
05:30 - 05:44	31
05:45 - 05:59	45
06:00 - 06:14	54
06:15 - 06:29	61
06:30 - 06:44	77
06:45 - 06:59	97
07:00 - 07:14	140
07:15 - 07:29	174
07:30 - 07:44	167
07:45 - 07:59	157
08:00 - 08:14	171
08:15 - 08:29	171
08:30 - 08:44	199
08:45 - 08:59	180
09:00 - 09:14	189
09:15 - 09:29	178
09:30 - 09:44	181
09:45 - 09:59	191
10:00 - 10:14	216
10:15 - 10:29	212
10:30 - 10:44	205
10:45 - 10:59	234
11:00 - 11:14	209
11:15 - 11:29	252
11:30 - 11:44	267
11:45 - 11:59	248
12:00 - 12:14	285
12:15 - 12:29	279
12:30 - 12:44	242
12:45 - 12:59	270

Daily Vehicle Volume Report

Study Date: Tuesday, 09/25/2018
Unit ID: 0167
Location: SW 72ND ST / E OF SW 70TH AVE

	Westbound Volume
13:00 - 13:14	255
13:15 - 13:29	248
13:30 - 13:44	264
13:45 - 13:59	226
14:00 - 14:14	270
14:15 - 14:29	256
14:30 - 14:44	280
14:45 - 14:59	303
15:00 - 15:14	323
15:15 - 15:29	311
15:30 - 15:44	412
15:45 - 15:59	379
16:00 - 16:14	429
16:15 - 16:29	420
16:30 - 16:44	445
16:45 - 16:59	413
17:00 - 17:14	411
17:15 - 17:29	388
17:30 - 17:44	428
17:45 - 17:59	386
18:00 - 18:14	400
18:15 - 18:29	319
18:30 - 18:44	375
18:45 - 18:59	313
19:00 - 19:14	277
19:15 - 19:29	273
19:30 - 19:44	252
19:45 - 19:59	172
20:00 - 20:14	249
20:15 - 20:29	224
20:30 - 20:44	205
20:45 - 20:59	136
21:00 - 21:14	171
21:15 - 21:29	142
21:30 - 21:44	151
21:45 - 21:59	134
22:00 - 22:14	129
22:15 - 22:29	99
22:30 - 22:44	99
22:45 - 22:59	85
23:00 - 23:14	107
23:15 - 23:29	88
23:30 - 23:44	73
23:45 - 23:59	54
Totals	**17090**
AM Peak Time	**10:55 - 11:54**
AM Peak Volume	**987**
PM Peak Time	**16:00 - 16:59**
PM Peak Volume	**1707**

Daily Vehicle Volume Report

Study Date: Wednesday, 09/26/2018
Unit ID: 0167
Location: SW 72ND ST / E OF SW 70TH AVE

	Westbound Volume
00:00 - 00:14	42
00:15 - 00:29	48
00:30 - 00:44	36
00:45 - 00:59	26
01:00 - 01:14	32
01:15 - 01:29	16
01:30 - 01:44	22
01:45 - 01:59	12
02:00 - 02:14	8
02:15 - 02:29	15
02:30 - 02:44	17
02:45 - 02:59	11
03:00 - 03:14	8
03:15 - 03:29	6
03:30 - 03:44	11
03:45 - 03:59	16
04:00 - 04:14	8
04:15 - 04:29	8
04:30 - 04:44	16
04:45 - 04:59	13
05:00 - 05:14	9
05:15 - 05:29	24
05:30 - 05:44	38
05:45 - 05:59	32
06:00 - 06:14	60
06:15 - 06:29	41
06:30 - 06:44	67
06:45 - 06:59	94
07:00 - 07:14	133
07:15 - 07:29	140
07:30 - 07:44	151
07:45 - 07:59	153
08:00 - 08:14	125
08:15 - 08:29	139
08:30 - 08:44	150
08:45 - 08:59	172
09:00 - 09:14	145
09:15 - 09:29	169
09:30 - 09:44	168
09:45 - 09:59	215
10:00 - 10:14	210
10:15 - 10:29	229
10:30 - 10:44	223
10:45 - 10:59	207
11:00 - 11:14	258
11:15 - 11:29	249
11:30 - 11:44	237
11:45 - 11:59	244
12:00 - 12:14	252
12:15 - 12:29	266
12:30 - 12:44	234
12:45 - 12:59	272

Daily Vehicle Volume Report

Study Date: Wednesday, 09/26/2018
Unit ID: 0167
Location: SW 72ND ST / E OF SW 70TH AVE

	Westbound Volume
13:00 - 13:14	246
13:15 - 13:29	262
13:30 - 13:44	270
13:45 - 13:59	250
14:00 - 14:14	258
14:15 - 14:29	299
14:30 - 14:44	299
14:45 - 14:59	283
15:00 - 15:14	315
15:15 - 15:29	367
15:30 - 15:44	364
15:45 - 15:59	406
16:00 - 16:14	351
16:15 - 16:29	379
16:30 - 16:44	411
16:45 - 16:59	411
17:00 - 17:14	419
17:15 - 17:29	411
17:30 - 17:44	405
17:45 - 17:59	384
18:00 - 18:14	380
18:15 - 18:29	325
18:30 - 18:44	327
18:45 - 18:59	305
19:00 - 19:14	260
19:15 - 19:29	267
19:30 - 19:44	263
19:45 - 19:59	190
20:00 - 20:14	234
20:15 - 20:29	202
20:30 - 20:44	214
20:45 - 20:59	171
21:00 - 21:14	159
21:15 - 21:29	179
21:30 - 21:44	151
21:45 - 21:59	156
22:00 - 22:14	131
22:15 - 22:29	91
22:30 - 22:44	108
22:45 - 22:59	93
23:00 - 23:14	87
23:15 - 23:29	79
23:30 - 23:44	80
23:45 - 23:59	65
Totals	**16784**
AM Peak Time	**10:58 - 11:57**
AM Peak Volume	**990**
PM Peak Time	**16:38 - 17:37**
PM Peak Volume	**1680**

Daily Vehicle Volume Report

Study Date: Thursday, 09/27/2018
Unit ID: 0167
Location: SW 72ND ST / E OF SW 70TH AVE

	Westbound Volume
00:00 - 00:14	43
00:15 - 00:29	38
00:30 - 00:44	37
00:45 - 00:59	36
01:00 - 01:14	35
01:15 - 01:29	23
01:30 - 01:44	16
01:45 - 01:59	14
02:00 - 02:14	17
02:15 - 02:29	14
02:30 - 02:44	18
02:45 - 02:59	14
03:00 - 03:14	18
03:15 - 03:29	17
03:30 - 03:44	11
03:45 - 03:59	19
04:00 - 04:14	18
04:15 - 04:29	18
04:30 - 04:44	8
04:45 - 04:59	18
05:00 - 05:14	17
05:15 - 05:29	28
05:30 - 05:44	35
05:45 - 05:59	35
06:00 - 06:14	55
06:15 - 06:29	58
06:30 - 06:44	83
06:45 - 06:59	95
07:00 - 07:14	143
07:15 - 07:29	153
07:30 - 07:44	182
07:45 - 07:59	148
08:00 - 08:14	172
08:15 - 08:29	202
08:30 - 08:44	183
08:45 - 08:59	161
09:00 - 09:14	169
09:15 - 09:29	172
09:30 - 09:44	186
09:45 - 09:59	190
10:00 - 10:14	202
10:15 - 10:29	199
10:30 - 10:44	217
10:45 - 10:59	208
11:00 - 11:14	231
11:15 - 11:29	231
11:30 - 11:44	248
11:45 - 11:59	280
12:00 - 12:14	262
12:15 - 12:29	259
12:30 - 12:44	248
12:45 - 12:59	265

Daily Vehicle Volume Report

Study Date: Thursday, 09/27/2018
Unit ID: 0167
Location: SW 72ND ST / E OF SW 70TH AVE

	Westbound Volume
13:00 - 13:14	258
13:15 - 13:29	250
13:30 - 13:44	255
13:45 - 13:59	262
14:00 - 14:14	261
14:15 - 14:29	287
14:30 - 14:44	279
14:45 - 14:59	303
15:00 - 15:14	327
15:15 - 15:29	322
15:30 - 15:44	420
15:45 - 15:59	349
16:00 - 16:14	411
16:15 - 16:29	426
16:30 - 16:44	429
16:45 - 16:59	409
17:00 - 17:14	430
17:15 - 17:29	458
17:30 - 17:44	405
17:45 - 17:59	381
18:00 - 18:14	383
18:15 - 18:29	342
18:30 - 18:44	310
18:45 - 18:59	270
19:00 - 19:14	250
19:15 - 19:29	265
19:30 - 19:44	265
19:45 - 19:59	195
20:00 - 20:14	246
20:15 - 20:29	225
20:30 - 20:44	192
20:45 - 20:59	169
21:00 - 21:14	168
21:15 - 21:29	152
21:30 - 21:44	147
21:45 - 21:59	126
22:00 - 22:14	129
22:15 - 22:29	136
22:30 - 22:44	99
22:45 - 22:59	103
23:00 - 23:14	95
23:15 - 23:29	82
23:30 - 23:44	96
23:45 - 23:59	69
Totals	**17185**
AM Peak Time	**11:00 - 11:59**
AM Peak Volume	**990**
PM Peak Time	**16:40 - 17:39**
PM Peak Volume	**1731**

Daily Vehicle Volume Report

Study Date: Tuesday, 09/18/2018
Unit ID: 0166
Location: SW 64TH ST / W OF SW 69TH CT

	Eastbound Volume
00:00 - 00:14	3
00:15 - 00:29	2
00:30 - 00:44	0
00:45 - 00:59	0
01:00 - 01:14	0
01:15 - 01:29	2
01:30 - 01:44	0
01:45 - 01:59	1
02:00 - 02:14	2
02:15 - 02:29	1
02:30 - 02:44	1
02:45 - 02:59	0
03:00 - 03:14	1
03:15 - 03:29	0
03:30 - 03:44	0
03:45 - 03:59	1
04:00 - 04:14	1
04:15 - 04:29	1
04:30 - 04:44	0
04:45 - 04:59	0
05:00 - 05:14	0
05:15 - 05:29	1
05:30 - 05:44	1
05:45 - 05:59	2
06:00 - 06:14	4
06:15 - 06:29	6
06:30 - 06:44	6
06:45 - 06:59	15
07:00 - 07:14	36
07:15 - 07:29	40
07:30 - 07:44	39
07:45 - 07:59	55
08:00 - 08:14	64
08:15 - 08:29	61
08:30 - 08:44	54
08:45 - 08:59	36
09:00 - 09:14	29
09:15 - 09:29	21
09:30 - 09:44	27
09:45 - 09:59	25
10:00 - 10:14	33
10:15 - 10:29	19
10:30 - 10:44	22
10:45 - 10:59	18
11:00 - 11:14	15
11:15 - 11:29	25
11:30 - 11:44	27
11:45 - 11:59	12
12:00 - 12:14	34
12:15 - 12:29	26
12:30 - 12:44	39
12:45 - 12:59	30

Daily Vehicle Volume Report

Study Date: Tuesday, 09/18/2018
Unit ID: 0166
Location: SW 64TH ST / W OF SW 69TH CT

	Eastbound Volume
13:00 - 13:14	26
13:15 - 13:29	34
13:30 - 13:44	29
13:45 - 13:59	33
14:00 - 14:14	49
14:15 - 14:29	45
14:30 - 14:44	58
14:45 - 14:59	79
15:00 - 15:14	85
15:15 - 15:29	115
15:30 - 15:44	105
15:45 - 15:59	93
16:00 - 16:14	112
16:15 - 16:29	109
16:30 - 16:44	153
16:45 - 16:59	148
17:00 - 17:14	151
17:15 - 17:29	153
17:30 - 17:44	150
17:45 - 17:59	153
18:00 - 18:14	137
18:15 - 18:29	137
18:30 - 18:44	90
18:45 - 18:59	66
19:00 - 19:14	70
19:15 - 19:29	55
19:30 - 19:44	37
19:45 - 19:59	25
20:00 - 20:14	28
20:15 - 20:29	28
20:30 - 20:44	21
20:45 - 20:59	20
21:00 - 21:14	12
21:15 - 21:29	15
21:30 - 21:44	8
21:45 - 21:59	8
22:00 - 22:14	6
22:15 - 22:29	5
22:30 - 22:44	4
22:45 - 22:59	2
23:00 - 23:14	2
23:15 - 23:29	2
23:30 - 23:44	2
23:45 - 23:59	1
Totals	**3499**
AM Peak Time	**07:47 - 08:46**
AM Peak Volume	**237**
PM Peak Time	**16:57 - 17:56**
PM Peak Volume	**623**

Daily Vehicle Volume Report

Study Date: Wednesday, 09/19/2018
Unit ID: 0166
Location: SW 64TH ST / W OF SW 69TH CT

	Eastbound Volume
00:00 - 00:14	2
00:15 - 00:29	0
00:30 - 00:44	4
00:45 - 00:59	0
01:00 - 01:14	1
01:15 - 01:29	0
01:30 - 01:44	0
01:45 - 01:59	0
02:00 - 02:14	2
02:15 - 02:29	0
02:30 - 02:44	1
02:45 - 02:59	0
03:00 - 03:14	1
03:15 - 03:29	0
03:30 - 03:44	0
03:45 - 03:59	0
04:00 - 04:14	0
04:15 - 04:29	1
04:30 - 04:44	0
04:45 - 04:59	1
05:00 - 05:14	0
05:15 - 05:29	0
05:30 - 05:44	5
05:45 - 05:59	4
06:00 - 06:14	4
06:15 - 06:29	6
06:30 - 06:44	6
06:45 - 06:59	9
07:00 - 07:14	25
07:15 - 07:29	42
07:30 - 07:44	23
07:45 - 07:59	27
08:00 - 08:14	34
08:15 - 08:29	32
08:30 - 08:44	21
08:45 - 08:59	31
09:00 - 09:14	15
09:15 - 09:29	18
09:30 - 09:44	24
09:45 - 09:59	24
10:00 - 10:14	16
10:15 - 10:29	23
10:30 - 10:44	24
10:45 - 10:59	13
11:00 - 11:14	23
11:15 - 11:29	27
11:30 - 11:44	26
11:45 - 11:59	29
12:00 - 12:14	33
12:15 - 12:29	35
12:30 - 12:44	46
12:45 - 12:59	35

Daily Vehicle Volume Report

Study Date: Wednesday, 09/19/2018
Unit ID: 0166
Location: SW 64TH ST / W OF SW 69TH CT

	Eastbound Volume
13:00 - 13:14	27
13:15 - 13:29	39
13:30 - 13:44	33
13:45 - 13:59	45
14:00 - 14:14	50
14:15 - 14:29	60
14:30 - 14:44	43
14:45 - 14:59	44
15:00 - 15:14	58
15:15 - 15:29	65
15:30 - 15:44	71
15:45 - 15:59	95
16:00 - 16:14	96
16:15 - 16:29	101
16:30 - 16:44	113
16:45 - 16:59	119
17:00 - 17:14	133
17:15 - 17:29	143
17:30 - 17:44	116
17:45 - 17:59	121
18:00 - 18:14	97
18:15 - 18:29	87
18:30 - 18:44	93
18:45 - 18:59	101
19:00 - 19:14	55
19:15 - 19:29	48
19:30 - 19:44	40
19:45 - 19:59	28
20:00 - 20:14	31
20:15 - 20:29	16
20:30 - 20:44	26
20:45 - 20:59	13
21:00 - 21:14	18
21:15 - 21:29	13
21:30 - 21:44	7
21:45 - 21:59	10
22:00 - 22:14	5
22:15 - 22:29	4
22:30 - 22:44	8
22:45 - 22:59	4
23:00 - 23:14	3
23:15 - 23:29	5
23:30 - 23:44	3
23:45 - 23:59	1
Totals	**2981**
AM Peak Time	**07:11 - 08:10**
AM Peak Volume	**131**
PM Peak Time	**16:35 - 17:34**
PM Peak Volume	**523**

Daily Vehicle Volume Report

Study Date: Thursday, 09/20/2018
Unit ID: 0166
Location: SW 64TH ST / W OF SW 69TH CT

	Eastbound Volume
00:00 - 00:14	2
00:15 - 00:29	1
00:30 - 00:44	0
00:45 - 00:59	2
01:00 - 01:14	1
01:15 - 01:29	1
01:30 - 01:44	3
01:45 - 01:59	0
02:00 - 02:14	0
02:15 - 02:29	0
02:30 - 02:44	0
02:45 - 02:59	0
03:00 - 03:14	0
03:15 - 03:29	0
03:30 - 03:44	1
03:45 - 03:59	0
04:00 - 04:14	0
04:15 - 04:29	1
04:30 - 04:44	2
04:45 - 04:59	0
05:00 - 05:14	2
05:15 - 05:29	0
05:30 - 05:44	1
05:45 - 05:59	1
06:00 - 06:14	3
06:15 - 06:29	5
06:30 - 06:44	10
06:45 - 06:59	16
07:00 - 07:14	26
07:15 - 07:29	44
07:30 - 07:44	40
07:45 - 07:59	54
08:00 - 08:14	67
08:15 - 08:29	64
08:30 - 08:44	34
08:45 - 08:59	29
09:00 - 09:14	26
09:15 - 09:29	19
09:30 - 09:44	21
09:45 - 09:59	20
10:00 - 10:14	24
10:15 - 10:29	29
10:30 - 10:44	24
10:45 - 10:59	17
11:00 - 11:14	29
11:15 - 11:29	28
11:30 - 11:44	22
11:45 - 11:59	23
12:00 - 12:14	29
12:15 - 12:29	25
12:30 - 12:44	25
12:45 - 12:59	35

Daily Vehicle Volume Report

Study Date: Thursday, 09/20/2018
Unit ID: 0166
Location: SW 64TH ST / W OF SW 69TH CT

	Eastbound Volume
13:00 - 13:14	37
13:15 - 13:29	32
13:30 - 13:44	31
13:45 - 13:59	48
14:00 - 14:14	41
14:15 - 14:29	47
14:30 - 14:44	54
14:45 - 14:59	83
15:00 - 15:14	92
15:15 - 15:29	104
15:30 - 15:44	89
15:45 - 15:59	99
16:00 - 16:14	121
16:15 - 16:29	128
16:30 - 16:44	137
16:45 - 16:59	132
17:00 - 17:14	127
17:15 - 17:29	152
17:30 - 17:44	143
17:45 - 17:59	120
18:00 - 18:14	113
18:15 - 18:29	105
18:30 - 18:44	79
18:45 - 18:59	76
19:00 - 19:14	67
19:15 - 19:29	47
19:30 - 19:44	45
19:45 - 19:59	32
20:00 - 20:14	31
20:15 - 20:29	37
20:30 - 20:44	26
20:45 - 20:59	16
21:00 - 21:14	15
21:15 - 21:29	15
21:30 - 21:44	12
21:45 - 21:59	11
22:00 - 22:14	11
22:15 - 22:29	9
22:30 - 22:44	7
22:45 - 22:59	4
23:00 - 23:14	1
23:15 - 23:29	3
23:30 - 23:44	3
23:45 - 23:59	4
Totals	**3392**
AM Peak Time	**07:35 - 08:34**
AM Peak Volume	**229**
PM Peak Time	**16:36 - 17:35**
PM Peak Volume	**563**

Daily Vehicle Volume Report

Study Date: Tuesday, 09/18/2018
Unit ID: 0212
Location: SW 64TH ST / W OF SW 69TH CT

	Westbound Volume
00:00 - 00:14	2
00:15 - 00:29	0
00:30 - 00:44	2
00:45 - 00:59	0
01:00 - 01:14	0
01:15 - 01:29	0
01:30 - 01:44	0
01:45 - 01:59	1
02:00 - 02:14	1
02:15 - 02:29	0
02:30 - 02:44	0
02:45 - 02:59	1
03:00 - 03:14	0
03:15 - 03:29	0
03:30 - 03:44	2
03:45 - 03:59	0
04:00 - 04:14	2
04:15 - 04:29	0
04:30 - 04:44	0
04:45 - 04:59	0
05:00 - 05:14	1
05:15 - 05:29	2
05:30 - 05:44	0
05:45 - 05:59	7
06:00 - 06:14	9
06:15 - 06:29	16
06:30 - 06:44	29
06:45 - 06:59	78
07:00 - 07:14	118
07:15 - 07:29	117
07:30 - 07:44	161
07:45 - 07:59	147
08:00 - 08:14	154
08:15 - 08:29	173
08:30 - 08:44	138
08:45 - 08:59	140
09:00 - 09:14	102
09:15 - 09:29	61
09:30 - 09:44	49
09:45 - 09:59	37
10:00 - 10:14	29
10:15 - 10:29	36
10:30 - 10:44	32
10:45 - 10:59	29
11:00 - 11:14	26
11:15 - 11:29	27
11:30 - 11:44	22
11:45 - 11:59	29
12:00 - 12:14	22
12:15 - 12:29	16
12:30 - 12:44	24
12:45 - 12:59	19

Daily Vehicle Volume Report

Study Date: Tuesday, 09/18/2018
Unit ID: 0212
Location: SW 64TH ST / W OF SW 69TH CT

	Westbound Volume
13:00 - 13:14	27
13:15 - 13:29	25
13:30 - 13:44	20
13:45 - 13:59	25
14:00 - 14:14	23
14:15 - 14:29	23
14:30 - 14:44	40
14:45 - 14:59	56
15:00 - 15:14	59
15:15 - 15:29	43
15:30 - 15:44	39
15:45 - 15:59	32
16:00 - 16:14	29
16:15 - 16:29	25
16:30 - 16:44	39
16:45 - 16:59	28
17:00 - 17:14	26
17:15 - 17:29	28
17:30 - 17:44	29
17:45 - 17:59	26
18:00 - 18:14	26
18:15 - 18:29	21
18:30 - 18:44	18
18:45 - 18:59	20
19:00 - 19:14	16
19:15 - 19:29	18
19:30 - 19:44	10
19:45 - 19:59	11
20:00 - 20:14	17
20:15 - 20:29	11
20:30 - 20:44	11
20:45 - 20:59	11
21:00 - 21:14	8
21:15 - 21:29	8
21:30 - 21:44	10
21:45 - 21:59	4
22:00 - 22:14	5
22:15 - 22:29	0
22:30 - 22:44	3
22:45 - 22:59	3
23:00 - 23:14	0
23:15 - 23:29	2
23:30 - 23:44	2
23:45 - 23:59	3
Totals	**2741**
AM Peak Time	**07:31 - 08:30**
AM Peak Volume	**638**
PM Peak Time	**14:36 - 15:35**
PM Peak Volume	**207**

Daily Vehicle Volume Report

Study Date: Wednesday, 09/19/2018
Unit ID: 0212
Location: SW 64TH ST / W OF SW 69TH CT

	Westbound Volume
00:00 - 00:14	0
00:15 - 00:29	0
00:30 - 00:44	1
00:45 - 00:59	0
01:00 - 01:14	1
01:15 - 01:29	1
01:30 - 01:44	0
01:45 - 01:59	0
02:00 - 02:14	0
02:15 - 02:29	0
02:30 - 02:44	0
02:45 - 02:59	0
03:00 - 03:14	0
03:15 - 03:29	1
03:30 - 03:44	0
03:45 - 03:59	0
04:00 - 04:14	0
04:15 - 04:29	1
04:30 - 04:44	0
04:45 - 04:59	4
05:00 - 05:14	1
05:15 - 05:29	1
05:30 - 05:44	5
05:45 - 05:59	3
06:00 - 06:14	8
06:15 - 06:29	16
06:30 - 06:44	35
06:45 - 06:59	62
07:00 - 07:14	89
07:15 - 07:29	116
07:30 - 07:44	116
07:45 - 07:59	106
08:00 - 08:14	119
08:15 - 08:29	144
08:30 - 08:44	156
08:45 - 08:59	105
09:00 - 09:14	73
09:15 - 09:29	62
09:30 - 09:44	54
09:45 - 09:59	37
10:00 - 10:14	28
10:15 - 10:29	23
10:30 - 10:44	26
10:45 - 10:59	27
11:00 - 11:14	24
11:15 - 11:29	17
11:30 - 11:44	29
11:45 - 11:59	28
12:00 - 12:14	25
12:15 - 12:29	22
12:30 - 12:44	35
12:45 - 12:59	50

Daily Vehicle Volume Report

Study Date: Wednesday, 09/19/2018
Unit ID: 0212
Location: SW 64TH ST / W OF SW 69TH CT

	Westbound Volume
13:00 - 13:14	41
13:15 - 13:29	30
13:30 - 13:44	20
13:45 - 13:59	23
14:00 - 14:14	25
14:15 - 14:29	23
14:30 - 14:44	22
14:45 - 14:59	28
15:00 - 15:14	31
15:15 - 15:29	37
15:30 - 15:44	32
15:45 - 15:59	31
16:00 - 16:14	21
16:15 - 16:29	23
16:30 - 16:44	26
16:45 - 16:59	30
17:00 - 17:14	30
17:15 - 17:29	37
17:30 - 17:44	20
17:45 - 17:59	21
18:00 - 18:14	31
18:15 - 18:29	25
18:30 - 18:44	20
18:45 - 18:59	25
19:00 - 19:14	15
19:15 - 19:29	18
19:30 - 19:44	15
19:45 - 19:59	21
20:00 - 20:14	13
20:15 - 20:29	9
20:30 - 20:44	11
20:45 - 20:59	9
21:00 - 21:14	12
21:15 - 21:29	8
21:30 - 21:44	9
21:45 - 21:59	5
22:00 - 22:14	2
22:15 - 22:29	1
22:30 - 22:44	1
22:45 - 22:59	2
23:00 - 23:14	5
23:15 - 23:29	1
23:30 - 23:44	1
23:45 - 23:59	1
Totals	**2462**
AM Peak Time	**07:46 - 08:45**
AM Peak Volume	**530**
PM Peak Time	**12:32 - 13:31**
PM Peak Volume	**160**

Daily Vehicle Volume Report

Study Date: Thursday, 09/20/2018
Unit ID: 0212
Location: SW 64TH ST / W OF SW 69TH CT

	Westbound Volume
00:00 - 00:14	0
00:15 - 00:29	0
00:30 - 00:44	0
00:45 - 00:59	0
01:00 - 01:14	0
01:15 - 01:29	0
01:30 - 01:44	1
01:45 - 01:59	1
02:00 - 02:14	0
02:15 - 02:29	0
02:30 - 02:44	1
02:45 - 02:59	0
03:00 - 03:14	0
03:15 - 03:29	0
03:30 - 03:44	0
03:45 - 03:59	0
04:00 - 04:14	0
04:15 - 04:29	1
04:30 - 04:44	0
04:45 - 04:59	0
05:00 - 05:14	2
05:15 - 05:29	4
05:30 - 05:44	7
05:45 - 05:59	9
06:00 - 06:14	11
06:15 - 06:29	12
06:30 - 06:44	45
06:45 - 06:59	79
07:00 - 07:14	90
07:15 - 07:29	124
07:30 - 07:44	161
07:45 - 07:59	121
08:00 - 08:14	176
08:15 - 08:29	166
08:30 - 08:44	137
08:45 - 08:59	116
09:00 - 09:14	106
09:15 - 09:29	53
09:30 - 09:44	43
09:45 - 09:59	44
10:00 - 10:14	30
10:15 - 10:29	26
10:30 - 10:44	28
10:45 - 10:59	25
11:00 - 11:14	26
11:15 - 11:29	15
11:30 - 11:44	24
11:45 - 11:59	30
12:00 - 12:14	29
12:15 - 12:29	17
12:30 - 12:44	19
12:45 - 12:59	31

Daily Vehicle Volume Report

Study Date: Thursday, 09/20/2018
Unit ID: 0212
Location: SW 64TH ST / W OF SW 69TH CT

	Westbound Volume
13:00 - 13:14	21
13:15 - 13:29	25
13:30 - 13:44	24
13:45 - 13:59	22
14:00 - 14:14	32
14:15 - 14:29	17
14:30 - 14:44	38
14:45 - 14:59	53
15:00 - 15:14	54
15:15 - 15:29	50
15:30 - 15:44	31
15:45 - 15:59	30
16:00 - 16:14	34
16:15 - 16:29	31
16:30 - 16:44	31
16:45 - 16:59	31
17:00 - 17:14	26
17:15 - 17:29	36
17:30 - 17:44	17
17:45 - 17:59	26
18:00 - 18:14	20
18:15 - 18:29	29
18:30 - 18:44	28
18:45 - 18:59	18
19:00 - 19:14	17
19:15 - 19:29	17
19:30 - 19:44	15
19:45 - 19:59	7
20:00 - 20:14	17
20:15 - 20:29	14
20:30 - 20:44	9
20:45 - 20:59	10
21:00 - 21:14	5
21:15 - 21:29	6
21:30 - 21:44	5
21:45 - 21:59	12
22:00 - 22:14	7
22:15 - 22:29	7
22:30 - 22:44	1
22:45 - 22:59	7
23:00 - 23:14	1
23:15 - 23:29	2
23:30 - 23:44	3
23:45 - 23:59	1
Totals	**2697**
AM Peak Time	**07:29 - 08:28**
AM Peak Volume	**627**
PM Peak Time	**14:32 - 15:31**
PM Peak Volume	**197**

Daily Vehicle Volume Report

Study Date: Tuesday, 10/02/2018
Unit ID: 0192
Location: SW 60TH ST / E OF SW 69TH CT

	Eastbound Volume
00:00 - 00:14	0
00:15 - 00:29	0
00:30 - 00:44	0
00:45 - 00:59	0
01:00 - 01:14	0
01:15 - 01:29	0
01:30 - 01:44	0
01:45 - 01:59	0
02:00 - 02:14	0
02:15 - 02:29	0
02:30 - 02:44	0
02:45 - 02:59	0
03:00 - 03:14	0
03:15 - 03:29	0
03:30 - 03:44	0
03:45 - 03:59	0
04:00 - 04:14	0
04:15 - 04:29	0
04:30 - 04:44	0
04:45 - 04:59	0
05:00 - 05:14	0
05:15 - 05:29	0
05:30 - 05:44	1
05:45 - 05:59	0
06:00 - 06:14	2
06:15 - 06:29	2
06:30 - 06:44	6
06:45 - 06:59	8
07:00 - 07:14	25
07:15 - 07:29	45
07:30 - 07:44	44
07:45 - 07:59	55
08:00 - 08:14	12
08:15 - 08:29	42
08:30 - 08:44	19
08:45 - 08:59	10
09:00 - 09:14	5
09:15 - 09:29	3
09:30 - 09:44	5
09:45 - 09:59	3
10:00 - 10:14	1
10:15 - 10:29	2
10:30 - 10:44	5
10:45 - 10:59	2
11:00 - 11:14	2
11:15 - 11:29	0
11:30 - 11:44	4
11:45 - 11:59	3
12:00 - 12:14	3
12:15 - 12:29	1
12:30 - 12:44	2
12:45 - 12:59	5

Daily Vehicle Volume Report

Study Date: Tuesday, 10/02/2018
Unit ID: 0192
Location: SW 60TH ST / E OF SW 69TH CT

	Eastbound Volume
13:00 - 13:14	4
13:15 - 13:29	10
13:30 - 13:44	11
13:45 - 13:59	9
14:00 - 14:14	10
14:15 - 14:29	14
14:30 - 14:44	17
14:45 - 14:59	6
15:00 - 15:14	14
15:15 - 15:29	27
15:30 - 15:44	8
15:45 - 15:59	3
16:00 - 16:14	7
16:15 - 16:29	8
16:30 - 16:44	4
16:45 - 16:59	7
17:00 - 17:14	7
17:15 - 17:29	8
17:30 - 17:44	8
17:45 - 17:59	5
18:00 - 18:14	2
18:15 - 18:29	3
18:30 - 18:44	0
18:45 - 18:59	3
19:00 - 19:14	2
19:15 - 19:29	3
19:30 - 19:44	4
19:45 - 19:59	2
20:00 - 20:14	0
20:15 - 20:29	0
20:30 - 20:44	0
20:45 - 20:59	1
21:00 - 21:14	2
21:15 - 21:29	0
21:30 - 21:44	0
21:45 - 21:59	0
22:00 - 22:14	0
22:15 - 22:29	0
22:30 - 22:44	1
22:45 - 22:59	0
23:00 - 23:14	0
23:15 - 23:29	0
23:30 - 23:44	0
23:45 - 23:59	0
Totals	**527**
AM Peak Time	**06:59 - 07:58**
AM Peak Volume	**169**
PM Peak Time	**14:29 - 15:28**
PM Peak Volume	**65**

Daily Vehicle Volume Report

Study Date: Wednesday, 10/03/2018
Unit ID: 0192
Location: SW 60TH ST / E OF SW 69TH CT

	Eastbound Volume
00:00 - 00:14	0
00:15 - 00:29	0
00:30 - 00:44	0
00:45 - 00:59	0
01:00 - 01:14	0
01:15 - 01:29	0
01:30 - 01:44	0
01:45 - 01:59	0
02:00 - 02:14	0
02:15 - 02:29	1
02:30 - 02:44	0
02:45 - 02:59	0
03:00 - 03:14	0
03:15 - 03:29	0
03:30 - 03:44	0
03:45 - 03:59	0
04:00 - 04:14	0
04:15 - 04:29	0
04:30 - 04:44	0
04:45 - 04:59	0
05:00 - 05:14	0
05:15 - 05:29	0
05:30 - 05:44	1
05:45 - 05:59	1
06:00 - 06:14	2
06:15 - 06:29	1
06:30 - 06:44	6
06:45 - 06:59	10
07:00 - 07:14	25
07:15 - 07:29	37
07:30 - 07:44	51
07:45 - 07:59	28
08:00 - 08:14	19
08:15 - 08:29	34
08:30 - 08:44	14
08:45 - 08:59	15
09:00 - 09:14	4
09:15 - 09:29	7
09:30 - 09:44	6
09:45 - 09:59	12
10:00 - 10:14	9
10:15 - 10:29	18
10:30 - 10:44	3
10:45 - 10:59	3
11:00 - 11:14	0
11:15 - 11:29	7
11:30 - 11:44	5
11:45 - 11:59	6
12:00 - 12:14	3
12:15 - 12:29	2
12:30 - 12:44	3
12:45 - 12:59	14

Daily Vehicle Volume Report

Study Date: Wednesday, 10/03/2018
Unit ID: 0192
Location: SW 60TH ST / E OF SW 69TH CT

	Eastbound Volume
13:00 - 13:14	14
13:15 - 13:29	19
13:30 - 13:44	15
13:45 - 13:59	9
14:00 - 14:14	17
14:15 - 14:29	8
14:30 - 14:44	4
14:45 - 14:59	17
15:00 - 15:14	22
15:15 - 15:29	12
15:30 - 15:44	9
15:45 - 15:59	6
16:00 - 16:14	4
16:15 - 16:29	6
16:30 - 16:44	4
16:45 - 16:59	13
17:00 - 17:14	8
17:15 - 17:29	10
17:30 - 17:44	8
17:45 - 17:59	5
18:00 - 18:14	0
18:15 - 18:29	4
18:30 - 18:44	4
18:45 - 18:59	1
19:00 - 19:14	5
19:15 - 19:29	1
19:30 - 19:44	1
19:45 - 19:59	0
20:00 - 20:14	1
20:15 - 20:29	1
20:30 - 20:44	1
20:45 - 20:59	1
21:00 - 21:14	0
21:15 - 21:29	1
21:30 - 21:44	0
21:45 - 21:59	0
22:00 - 22:14	1
22:15 - 22:29	2
22:30 - 22:44	0
22:45 - 22:59	0
23:00 - 23:14	0
23:15 - 23:29	1
23:30 - 23:44	0
23:45 - 23:59	1
Totals	**583**
AM Peak Time	**07:09 - 08:08**
AM Peak Volume	**145**
PM Peak Time	**12:48 - 13:47**
PM Peak Volume	**65**

Daily Vehicle Volume Report

Study Date: Thursday, 10/04/2018
Unit ID: 0192
Location: SW 60TH ST / E OF SW 69TH CT

	Eastbound Volume
00:00 - 00:14	0
00:15 - 00:29	0
00:30 - 00:44	0
00:45 - 00:59	0
01:00 - 01:14	0
01:15 - 01:29	0
01:30 - 01:44	0
01:45 - 01:59	0
02:00 - 02:14	0
02:15 - 02:29	0
02:30 - 02:44	0
02:45 - 02:59	0
03:00 - 03:14	0
03:15 - 03:29	0
03:30 - 03:44	0
03:45 - 03:59	0
04:00 - 04:14	0
04:15 - 04:29	0
04:30 - 04:44	0
04:45 - 04:59	0
05:00 - 05:14	0
05:15 - 05:29	1
05:30 - 05:44	1
05:45 - 05:59	0
06:00 - 06:14	0
06:15 - 06:29	4
06:30 - 06:44	1
06:45 - 06:59	10
07:00 - 07:14	17
07:15 - 07:29	44
07:30 - 07:44	44
07:45 - 07:59	32
08:00 - 08:14	42
08:15 - 08:29	61
08:30 - 08:44	30
08:45 - 08:59	12
09:00 - 09:14	8
09:15 - 09:29	11
09:30 - 09:44	3
09:45 - 09:59	2
10:00 - 10:14	2
10:15 - 10:29	6
10:30 - 10:44	1
10:45 - 10:59	2
11:00 - 11:14	3
11:15 - 11:29	4
11:30 - 11:44	1
11:45 - 11:59	5
12:00 - 12:14	1
12:15 - 12:29	7
12:30 - 12:44	1
12:45 - 12:59	6

Daily Vehicle Volume Report

Study Date: Thursday, 10/04/2018
Unit ID: 0192
Location: SW 60TH ST / E OF SW 69TH CT

	Eastbound Volume
13:00 - 13:14	11
13:15 - 13:29	5
13:30 - 13:44	8
13:45 - 13:59	12
14:00 - 14:14	13
14:15 - 14:29	20
14:30 - 14:44	10
14:45 - 14:59	4
15:00 - 15:14	6
15:15 - 15:29	21
15:30 - 15:44	7
15:45 - 15:59	5
16:00 - 16:14	10
16:15 - 16:29	7
16:30 - 16:44	16
16:45 - 16:59	4
17:00 - 17:14	3
17:15 - 17:29	5
17:30 - 17:44	7
17:45 - 17:59	6
18:00 - 18:14	6
18:15 - 18:29	2
18:30 - 18:44	8
18:45 - 18:59	7
19:00 - 19:14	7
19:15 - 19:29	1
19:30 - 19:44	1
19:45 - 19:59	3
20:00 - 20:14	3
20:15 - 20:29	4
20:30 - 20:44	2
20:45 - 20:59	0
21:00 - 21:14	0
21:15 - 21:29	0
21:30 - 21:44	1
21:45 - 21:59	1
22:00 - 22:14	0
22:15 - 22:29	0
22:30 - 22:44	0
22:45 - 22:59	0
23:00 - 23:14	0
23:15 - 23:29	1
23:30 - 23:44	1
23:45 - 23:59	0
Totals	**590**
AM Peak Time	**07:32 - 08:31**
AM Peak Volume	**186**
PM Peak Time	**13:34 - 14:33**
PM Peak Volume	**57**

Daily Vehicle Volume Report

Study Date: Tuesday, 10/02/2018
Unit ID: 0192
Location: SW 60TH ST / E OF SW 69TH CT

	Westbound Volume
00:00 - 00:14	0
00:15 - 00:29	0
00:30 - 00:44	0
00:45 - 00:59	0
01:00 - 01:14	0
01:15 - 01:29	0
01:30 - 01:44	0
01:45 - 01:59	0
02:00 - 02:14	0
02:15 - 02:29	0
02:30 - 02:44	0
02:45 - 02:59	0
03:00 - 03:14	0
03:15 - 03:29	0
03:30 - 03:44	0
03:45 - 03:59	0
04:00 - 04:14	0
04:15 - 04:29	0
04:30 - 04:44	0
04:45 - 04:59	0
05:00 - 05:14	0
05:15 - 05:29	0
05:30 - 05:44	0
05:45 - 05:59	0
06:00 - 06:14	0
06:15 - 06:29	0
06:30 - 06:44	5
06:45 - 06:59	1
07:00 - 07:14	5
07:15 - 07:29	8
07:30 - 07:44	6
07:45 - 07:59	6
08:00 - 08:14	2
08:15 - 08:29	9
08:30 - 08:44	3
08:45 - 08:59	3
09:00 - 09:14	4
09:15 - 09:29	2
09:30 - 09:44	3
09:45 - 09:59	0
10:00 - 10:14	3
10:15 - 10:29	5
10:30 - 10:44	1
10:45 - 10:59	6
11:00 - 11:14	0
11:15 - 11:29	4
11:30 - 11:44	3
11:45 - 11:59	5
12:00 - 12:14	3
12:15 - 12:29	3
12:30 - 12:44	2
12:45 - 12:59	3

Daily Vehicle Volume Report

Study Date: Tuesday, 10/02/2018
Unit ID: 0192
Location: SW 60TH ST / E OF SW 69TH CT

	Westbound Volume
13:00 - 13:14	3
13:15 - 13:29	6
13:30 - 13:44	2
13:45 - 13:59	4
14:00 - 14:14	2
14:15 - 14:29	4
14:30 - 14:44	4
14:45 - 14:59	5
15:00 - 15:14	36
15:15 - 15:29	61
15:30 - 15:44	36
15:45 - 15:59	9
16:00 - 16:14	13
16:15 - 16:29	17
16:30 - 16:44	12
16:45 - 16:59	13
17:00 - 17:14	25
17:15 - 17:29	39
17:30 - 17:44	54
17:45 - 17:59	37
18:00 - 18:14	31
18:15 - 18:29	16
18:30 - 18:44	8
18:45 - 18:59	3
19:00 - 19:14	7
19:15 - 19:29	3
19:30 - 19:44	2
19:45 - 19:59	2
20:00 - 20:14	6
20:15 - 20:29	2
20:30 - 20:44	1
20:45 - 20:59	2
21:00 - 21:14	7
21:15 - 21:29	3
21:30 - 21:44	1
21:45 - 21:59	1
22:00 - 22:14	1
22:15 - 22:29	3
22:30 - 22:44	0
22:45 - 22:59	3
23:00 - 23:14	0
23:15 - 23:29	0
23:30 - 23:44	0
23:45 - 23:59	0
Totals	**579**
AM Peak Time	**06:59 - 07:58**
AM Peak Volume	**25**
PM Peak Time	**17:08 - 18:07**
PM Peak Volume	**163**

Daily Vehicle Volume Report

Study Date: Wednesday, 10/03/2018
Unit ID: 0192
Location: SW 60TH ST / E OF SW 69TH CT

	Westbound Volume
00:00 - 00:14	0
00:15 - 00:29	0
00:30 - 00:44	1
00:45 - 00:59	0
01:00 - 01:14	0
01:15 - 01:29	0
01:30 - 01:44	0
01:45 - 01:59	0
02:00 - 02:14	0
02:15 - 02:29	0
02:30 - 02:44	0
02:45 - 02:59	0
03:00 - 03:14	0
03:15 - 03:29	0
03:30 - 03:44	0
03:45 - 03:59	0
04:00 - 04:14	0
04:15 - 04:29	0
04:30 - 04:44	0
04:45 - 04:59	0
05:00 - 05:14	0
05:15 - 05:29	0
05:30 - 05:44	1
05:45 - 05:59	0
06:00 - 06:14	0
06:15 - 06:29	1
06:30 - 06:44	5
06:45 - 06:59	1
07:00 - 07:14	7
07:15 - 07:29	7
07:30 - 07:44	7
07:45 - 07:59	2
08:00 - 08:14	7
08:15 - 08:29	8
08:30 - 08:44	8
08:45 - 08:59	6
09:00 - 09:14	4
09:15 - 09:29	4
09:30 - 09:44	2
09:45 - 09:59	1
10:00 - 10:14	0
10:15 - 10:29	4
10:30 - 10:44	1
10:45 - 10:59	4
11:00 - 11:14	6
11:15 - 11:29	5
11:30 - 11:44	1
11:45 - 11:59	3
12:00 - 12:14	0
12:15 - 12:29	3
12:30 - 12:44	3
12:45 - 12:59	2

Daily Vehicle Volume Report

Study Date: Wednesday, 10/03/2018
Unit ID: 0192
Location: SW 60TH ST / E OF SW 69TH CT

	Westbound Volume
13:00 - 13:14	3
13:15 - 13:29	7
13:30 - 13:44	8
13:45 - 13:59	20
14:00 - 14:14	39
14:15 - 14:29	7
14:30 - 14:44	6
14:45 - 14:59	6
15:00 - 15:14	19
15:15 - 15:29	23
15:30 - 15:44	20
15:45 - 15:59	14
16:00 - 16:14	11
16:15 - 16:29	10
16:30 - 16:44	18
16:45 - 16:59	27
17:00 - 17:14	27
17:15 - 17:29	29
17:30 - 17:44	25
17:45 - 17:59	33
18:00 - 18:14	15
18:15 - 18:29	12
18:30 - 18:44	13
18:45 - 18:59	1
19:00 - 19:14	4
19:15 - 19:29	2
19:30 - 19:44	4
19:45 - 19:59	6
20:00 - 20:14	5
20:15 - 20:29	3
20:30 - 20:44	3
20:45 - 20:59	0
21:00 - 21:14	1
21:15 - 21:29	3
21:30 - 21:44	0
21:45 - 21:59	0
22:00 - 22:14	0
22:15 - 22:29	1
22:30 - 22:44	0
22:45 - 22:59	0
23:00 - 23:14	1
23:15 - 23:29	0
23:30 - 23:44	0
23:45 - 23:59	1
Totals	**531**
AM Peak Time	**08:02 - 09:01**
AM Peak Volume	**30**
PM Peak Time	**16:51 - 17:50**
PM Peak Volume	**119**

Daily Vehicle Volume Report

Study Date: Thursday, 10/04/2018
Unit ID: 0192
Location: SW 60TH ST / E OF SW 69TH CT

	Westbound Volume
00:00 - 00:14	0
00:15 - 00:29	0
00:30 - 00:44	0
00:45 - 00:59	2
01:00 - 01:14	0
01:15 - 01:29	0
01:30 - 01:44	0
01:45 - 01:59	0
02:00 - 02:14	1
02:15 - 02:29	0
02:30 - 02:44	0
02:45 - 02:59	0
03:00 - 03:14	0
03:15 - 03:29	0
03:30 - 03:44	0
03:45 - 03:59	0
04:00 - 04:14	0
04:15 - 04:29	0
04:30 - 04:44	0
04:45 - 04:59	0
05:00 - 05:14	0
05:15 - 05:29	0
05:30 - 05:44	1
05:45 - 05:59	0
06:00 - 06:14	0
06:15 - 06:29	2
06:30 - 06:44	3
06:45 - 06:59	2
07:00 - 07:14	9
07:15 - 07:29	9
07:30 - 07:44	4
07:45 - 07:59	4
08:00 - 08:14	1
08:15 - 08:29	4
08:30 - 08:44	3
08:45 - 08:59	5
09:00 - 09:14	4
09:15 - 09:29	2
09:30 - 09:44	4
09:45 - 09:59	4
10:00 - 10:14	3
10:15 - 10:29	4
10:30 - 10:44	5
10:45 - 10:59	0
11:00 - 11:14	5
11:15 - 11:29	0
11:30 - 11:44	1
11:45 - 11:59	2
12:00 - 12:14	1
12:15 - 12:29	4
12:30 - 12:44	3
12:45 - 12:59	1

Daily Vehicle Volume Report

Study Date: Thursday, 10/04/2018
Unit ID: 0192
Location: SW 60TH ST / E OF SW 69TH CT

	Westbound Volume
13:00 - 13:14	6
13:15 - 13:29	5
13:30 - 13:44	1
13:45 - 13:59	2
14:00 - 14:14	3
14:15 - 14:29	4
14:30 - 14:44	3
14:45 - 14:59	8
15:00 - 15:14	22
15:15 - 15:29	63
15:30 - 15:44	34
15:45 - 15:59	15
16:00 - 16:14	13
16:15 - 16:29	9
16:30 - 16:44	22
16:45 - 16:59	32
17:00 - 17:14	24
17:15 - 17:29	46
17:30 - 17:44	48
17:45 - 17:59	37
18:00 - 18:14	31
18:15 - 18:29	13
18:30 - 18:44	14
18:45 - 18:59	13
19:00 - 19:14	1
19:15 - 19:29	2
19:30 - 19:44	4
19:45 - 19:59	4
20:00 - 20:14	5
20:15 - 20:29	3
20:30 - 20:44	5
20:45 - 20:59	5
21:00 - 21:14	1
21:15 - 21:29	3
21:30 - 21:44	2
21:45 - 21:59	2
22:00 - 22:14	1
22:15 - 22:29	2
22:30 - 22:44	1
22:45 - 22:59	0
23:00 - 23:14	0
23:15 - 23:29	0
23:30 - 23:44	0
23:45 - 23:59	0
Totals	**602**
AM Peak Time	**06:53 - 07:52**
AM Peak Volume	**26**
PM Peak Time	**17:10 - 18:09**
PM Peak Volume	**171**

Daily Vehicle Volume Report

Study Date: Tuesday, 09/18/2018
Unit ID: 0198
Location: SW 56TH ST / E OF SW 69TH CT

	Eastbound Volume
00:00 - 00:14	15
00:15 - 00:29	15
00:30 - 00:44	15
00:45 - 00:59	7
01:00 - 01:14	6
01:15 - 01:29	7
01:30 - 01:44	3
01:45 - 01:59	3
02:00 - 02:14	4
02:15 - 02:29	8
02:30 - 02:44	7
02:45 - 02:59	4
03:00 - 03:14	6
03:15 - 03:29	4
03:30 - 03:44	5
03:45 - 03:59	10
04:00 - 04:14	4
04:15 - 04:29	14
04:30 - 04:44	17
04:45 - 04:59	25
05:00 - 05:14	32
05:15 - 05:29	41
05:30 - 05:44	90
05:45 - 05:59	134
06:00 - 06:14	143
06:15 - 06:29	260
06:30 - 06:44	379
06:45 - 06:59	420
07:00 - 07:14	441
07:15 - 07:29	364
07:30 - 07:44	409
07:45 - 07:59	356
08:00 - 08:14	404
08:15 - 08:29	409
08:30 - 08:44	319
08:45 - 08:59	356
09:00 - 09:14	424
09:15 - 09:29	358
09:30 - 09:44	325
09:45 - 09:59	326
10:00 - 10:14	252
10:15 - 10:29	296
10:30 - 10:44	282
10:45 - 10:59	283
11:00 - 11:14	189
11:15 - 11:29	222
11:30 - 11:44	229
11:45 - 11:59	219
12:00 - 12:14	231
12:15 - 12:29	225
12:30 - 12:44	176
12:45 - 12:59	212

Daily Vehicle Volume Report

Study Date: Tuesday, 09/18/2018
Unit ID: 0198
Location: SW 56TH ST / E OF SW 69TH CT

	Eastbound Volume
13:00 - 13:14	204
13:15 - 13:29	179
13:30 - 13:44	219
13:45 - 13:59	222
14:00 - 14:14	226
14:15 - 14:29	249
14:30 - 14:44	254
14:45 - 14:59	220
15:00 - 15:14	206
15:15 - 15:29	223
15:30 - 15:44	217
15:45 - 15:59	203
16:00 - 16:14	210
16:15 - 16:29	201
16:30 - 16:44	216
16:45 - 16:59	220
17:00 - 17:14	204
17:15 - 17:29	196
17:30 - 17:44	209
17:45 - 17:59	210
18:00 - 18:14	235
18:15 - 18:29	194
18:30 - 18:44	183
18:45 - 18:59	182
19:00 - 19:14	154
19:15 - 19:29	146
19:30 - 19:44	138
19:45 - 19:59	119
20:00 - 20:14	106
20:15 - 20:29	125
20:30 - 20:44	125
20:45 - 20:59	91
21:00 - 21:14	89
21:15 - 21:29	89
21:30 - 21:44	68
21:45 - 21:59	71
22:00 - 22:14	57
22:15 - 22:29	58
22:30 - 22:44	49
22:45 - 22:59	50
23:00 - 23:14	35
23:15 - 23:29	31
23:30 - 23:44	33
23:45 - 23:59	22
Totals	**15723**
AM Peak Time	**06:47 - 07:46**
AM Peak Volume	**1640**
PM Peak Time	**13:52 - 14:51**
PM Peak Volume	**985**

Daily Vehicle Volume Report

Study Date: Wednesday, 09/19/2018
Unit ID: 0198
Location: SW 56TH ST / E OF SW 69TH CT

	Eastbound Volume
00:00 - 00:14	12
00:15 - 00:29	19
00:30 - 00:44	15
00:45 - 00:59	13
01:00 - 01:14	11
01:15 - 01:29	9
01:30 - 01:44	7
01:45 - 01:59	6
02:00 - 02:14	5
02:15 - 02:29	5
02:30 - 02:44	4
02:45 - 02:59	8
03:00 - 03:14	1
03:15 - 03:29	7
03:30 - 03:44	5
03:45 - 03:59	9
04:00 - 04:14	5
04:15 - 04:29	13
04:30 - 04:44	23
04:45 - 04:59	24
05:00 - 05:14	34
05:15 - 05:29	57
05:30 - 05:44	68
05:45 - 05:59	104
06:00 - 06:14	106
06:15 - 06:29	224
06:30 - 06:44	312
06:45 - 06:59	340
07:00 - 07:14	346
07:15 - 07:29	339
07:30 - 07:44	383
07:45 - 07:59	386
08:00 - 08:14	401
08:15 - 08:29	367
08:30 - 08:44	379
08:45 - 08:59	398
09:00 - 09:14	391
09:15 - 09:29	338
09:30 - 09:44	327
09:45 - 09:59	373
10:00 - 10:14	285
10:15 - 10:29	234
10:30 - 10:44	254
10:45 - 10:59	239
11:00 - 11:14	204
11:15 - 11:29	219
11:30 - 11:44	239
11:45 - 11:59	225
12:00 - 12:14	221
12:15 - 12:29	202
12:30 - 12:44	223
12:45 - 12:59	227

Daily Vehicle Volume Report

Study Date: Wednesday, 09/19/2018
Unit ID: 0198
Location: SW 56TH ST / E OF SW 69TH CT

	Eastbound Volume
13:00 - 13:14	201
13:15 - 13:29	224
13:30 - 13:44	228
13:45 - 13:59	210
14:00 - 14:14	203
14:15 - 14:29	192
14:30 - 14:44	205
14:45 - 14:59	201
15:00 - 15:14	193
15:15 - 15:29	216
15:30 - 15:44	225
15:45 - 15:59	170
16:00 - 16:14	185
16:15 - 16:29	169
16:30 - 16:44	176
16:45 - 16:59	209
17:00 - 17:14	183
17:15 - 17:29	226
17:30 - 17:44	206
17:45 - 17:59	211
18:00 - 18:14	204
18:15 - 18:29	197
18:30 - 18:44	190
18:45 - 18:59	175
19:00 - 19:14	157
19:15 - 19:29	135
19:30 - 19:44	154
19:45 - 19:59	109
20:00 - 20:14	130
20:15 - 20:29	106
20:30 - 20:44	112
20:45 - 20:59	101
21:00 - 21:14	92
21:15 - 21:29	94
21:30 - 21:44	73
21:45 - 21:59	63
22:00 - 22:14	73
22:15 - 22:29	57
22:30 - 22:44	35
22:45 - 22:59	47
23:00 - 23:14	32
23:15 - 23:29	40
23:30 - 23:44	22
23:45 - 23:59	21
Totals	**15098**
AM Peak Time	**07:35 - 08:34**
AM Peak Volume	**1564**
PM Peak Time	**12:28 - 13:27**
PM Peak Volume	**884**

Daily Vehicle Volume Report

Study Date: Thursday, 09/20/2018
Unit ID: 0198
Location: SW 56TH ST / E OF SW 69TH CT

	Eastbound Volume
00:00 - 00:14	18
00:15 - 00:29	10
00:30 - 00:44	16
00:45 - 00:59	13
01:00 - 01:14	11
01:15 - 01:29	14
01:30 - 01:44	11
01:45 - 01:59	11
02:00 - 02:14	10
02:15 - 02:29	2
02:30 - 02:44	3
02:45 - 02:59	5
03:00 - 03:14	5
03:15 - 03:29	8
03:30 - 03:44	8
03:45 - 03:59	10
04:00 - 04:14	8
04:15 - 04:29	6
04:30 - 04:44	25
04:45 - 04:59	33
05:00 - 05:14	25
05:15 - 05:29	49
05:30 - 05:44	83
05:45 - 05:59	126
06:00 - 06:14	156
06:15 - 06:29	267
06:30 - 06:44	348
06:45 - 06:59	413
07:00 - 07:14	467
07:15 - 07:29	376
07:30 - 07:44	366
07:45 - 07:59	392
08:00 - 08:14	363
08:15 - 08:29	394
08:30 - 08:44	314
08:45 - 08:59	378
09:00 - 09:14	402
09:15 - 09:29	331
09:30 - 09:44	321
09:45 - 09:59	330
10:00 - 10:14	296
10:15 - 10:29	277
10:30 - 10:44	235
10:45 - 10:59	240
11:00 - 11:14	199
11:15 - 11:29	233
11:30 - 11:44	212
11:45 - 11:59	228
12:00 - 12:14	227
12:15 - 12:29	237
12:30 - 12:44	220
12:45 - 12:59	207

Daily Vehicle Volume Report

Study Date: Thursday, 09/20/2018
Unit ID: 0198
Location: SW 56TH ST / E OF SW 69TH CT

	Eastbound Volume
13:00 - 13:14	195
13:15 - 13:29	211
13:30 - 13:44	224
13:45 - 13:59	237
14:00 - 14:14	229
14:15 - 14:29	217
14:30 - 14:44	254
14:45 - 14:59	232
15:00 - 15:14	239
15:15 - 15:29	256
15:30 - 15:44	224
15:45 - 15:59	232
16:00 - 16:14	203
16:15 - 16:29	220
16:30 - 16:44	225
16:45 - 16:59	223
17:00 - 17:14	239
17:15 - 17:29	201
17:30 - 17:44	241
17:45 - 17:59	249
18:00 - 18:14	204
18:15 - 18:29	199
18:30 - 18:44	191
18:45 - 18:59	185
19:00 - 19:14	213
19:15 - 19:29	182
19:30 - 19:44	148
19:45 - 19:59	131
20:00 - 20:14	140
20:15 - 20:29	141
20:30 - 20:44	109
20:45 - 20:59	97
21:00 - 21:14	94
21:15 - 21:29	87
21:30 - 21:44	72
21:45 - 21:59	79
22:00 - 22:14	56
22:15 - 22:29	70
22:30 - 22:44	54
22:45 - 22:59	44
23:00 - 23:14	45
23:15 - 23:29	32
23:30 - 23:44	20
23:45 - 23:59	28
Totals	**16111**
AM Peak Time	**06:50 - 07:49**
AM Peak Volume	**1631**
PM Peak Time	**14:40 - 15:39**
PM Peak Volume	**1005**

Daily Vehicle Volume Report

Study Date: Tuesday, 09/18/2018
Unit ID: 0186
Location: SW 56TH ST / E OF SW 69TH CT

	Westbound Volume
00:00 - 00:14	28
00:15 - 00:29	24
00:30 - 00:44	15
00:45 - 00:59	10
01:00 - 01:14	10
01:15 - 01:29	8
01:30 - 01:44	6
01:45 - 01:59	9
02:00 - 02:14	5
02:15 - 02:29	9
02:30 - 02:44	6
02:45 - 02:59	5
03:00 - 03:14	4
03:15 - 03:29	4
03:30 - 03:44	3
03:45 - 03:59	4
04:00 - 04:14	4
04:15 - 04:29	3
04:30 - 04:44	16
04:45 - 04:59	10
05:00 - 05:14	17
05:15 - 05:29	16
05:30 - 05:44	26
05:45 - 05:59	35
06:00 - 06:14	63
06:15 - 06:29	72
06:30 - 06:44	113
06:45 - 06:59	142
07:00 - 07:14	186
07:15 - 07:29	194
07:30 - 07:44	180
07:45 - 07:59	199
08:00 - 08:14	192
08:15 - 08:29	243
08:30 - 08:44	223
08:45 - 08:59	210
09:00 - 09:14	174
09:15 - 09:29	188
09:30 - 09:44	162
09:45 - 09:59	172
10:00 - 10:14	172
10:15 - 10:29	156
10:30 - 10:44	207
10:45 - 10:59	174
11:00 - 11:14	196
11:15 - 11:29	222
11:30 - 11:44	195
11:45 - 11:59	208
12:00 - 12:14	224
12:15 - 12:29	182
12:30 - 12:44	274
12:45 - 12:59	241

Daily Vehicle Volume Report

Study Date: Tuesday, 09/18/2018
Unit ID: 0186
Location: SW 56TH ST / E OF SW 69TH CT

	Westbound Volume
13:00 - 13:14	219
13:15 - 13:29	227
13:30 - 13:44	240
13:45 - 13:59	229
14:00 - 14:14	269
14:15 - 14:29	314
14:30 - 14:44	391
14:45 - 14:59	275
15:00 - 15:14	328
15:15 - 15:29	343
15:30 - 15:44	386
15:45 - 15:59	390
16:00 - 16:14	381
16:15 - 16:29	387
16:30 - 16:44	393
16:45 - 16:59	384
17:00 - 17:14	378
17:15 - 17:29	339
17:30 - 17:44	375
17:45 - 17:59	345
18:00 - 18:14	319
18:15 - 18:29	320
18:30 - 18:44	329
18:45 - 18:59	346
19:00 - 19:14	267
19:15 - 19:29	285
19:30 - 19:44	270
19:45 - 19:59	240
20:00 - 20:14	202
20:15 - 20:29	161
20:30 - 20:44	132
20:45 - 20:59	155
21:00 - 21:14	146
21:15 - 21:29	121
21:30 - 21:44	113
21:45 - 21:59	85
22:00 - 22:14	79
22:15 - 22:29	103
22:30 - 22:44	65
22:45 - 22:59	57
23:00 - 23:14	49
23:15 - 23:29	51
23:30 - 23:44	48
23:45 - 23:59	27
Totals	**16004**
AM Peak Time	**07:49 - 08:48**
AM Peak Volume	**874**
PM Peak Time	**15:39 - 16:38**
PM Peak Volume	**1573**

Daily Vehicle Volume Report

Study Date: Wednesday, 09/19/2018
Unit ID: 0186
Location: SW 56TH ST / E OF SW 69TH CT

	Westbound Volume
00:00 - 00:14	40
00:15 - 00:29	23
00:30 - 00:44	24
00:45 - 00:59	15
01:00 - 01:14	10
01:15 - 01:29	9
01:30 - 01:44	13
01:45 - 01:59	5
02:00 - 02:14	4
02:15 - 02:29	8
02:30 - 02:44	6
02:45 - 02:59	5
03:00 - 03:14	8
03:15 - 03:29	7
03:30 - 03:44	0
03:45 - 03:59	5
04:00 - 04:14	3
04:15 - 04:29	5
04:30 - 04:44	11
04:45 - 04:59	9
05:00 - 05:14	10
05:15 - 05:29	24
05:30 - 05:44	21
05:45 - 05:59	41
06:00 - 06:14	44
06:15 - 06:29	46
06:30 - 06:44	56
06:45 - 06:59	78
07:00 - 07:14	98
07:15 - 07:29	116
07:30 - 07:44	169
07:45 - 07:59	140
08:00 - 08:14	144
08:15 - 08:29	156
08:30 - 08:44	187
08:45 - 08:59	158
09:00 - 09:14	169
09:15 - 09:29	184
09:30 - 09:44	174
09:45 - 09:59	182
10:00 - 10:14	191
10:15 - 10:29	181
10:30 - 10:44	176
10:45 - 10:59	178
11:00 - 11:14	175
11:15 - 11:29	221
11:30 - 11:44	191
11:45 - 11:59	188
12:00 - 12:14	208
12:15 - 12:29	267
12:30 - 12:44	262
12:45 - 12:59	259

Daily Vehicle Volume Report

Study Date: Wednesday, 09/19/2018
Unit ID: 0186
Location: SW 56TH ST / E OF SW 69TH CT

	Westbound Volume
13:00 - 13:14	222
13:15 - 13:29	226
13:30 - 13:44	251
13:45 - 13:59	281
14:00 - 14:14	257
14:15 - 14:29	237
14:30 - 14:44	279
14:45 - 14:59	253
15:00 - 15:14	328
15:15 - 15:29	280
15:30 - 15:44	343
15:45 - 15:59	358
16:00 - 16:14	334
16:15 - 16:29	352
16:30 - 16:44	345
16:45 - 16:59	339
17:00 - 17:14	339
17:15 - 17:29	353
17:30 - 17:44	358
17:45 - 17:59	316
18:00 - 18:14	325
18:15 - 18:29	361
18:30 - 18:44	345
18:45 - 18:59	271
19:00 - 19:14	241
19:15 - 19:29	239
19:30 - 19:44	236
19:45 - 19:59	232
20:00 - 20:14	181
20:15 - 20:29	188
20:30 - 20:44	138
20:45 - 20:59	134
21:00 - 21:14	125
21:15 - 21:29	134
21:30 - 21:44	112
21:45 - 21:59	84
22:00 - 22:14	76
22:15 - 22:29	65
22:30 - 22:44	56
22:45 - 22:59	46
23:00 - 23:14	48
23:15 - 23:29	51
23:30 - 23:44	39
23:45 - 23:59	37
Totals	**14719**
AM Peak Time	**10:42 - 11:41**
AM Peak Volume	**778**
PM Peak Time	**15:49 - 16:48**
PM Peak Volume	**1403**

Daily Vehicle Volume Report

Study Date: Thursday, 09/20/2018
Unit ID: 0186
Location: SW 56TH ST / E OF SW 69TH CT

	Westbound Volume
00:00 - 00:14	21
00:15 - 00:29	22
00:30 - 00:44	14
00:45 - 00:59	19
01:00 - 01:14	14
01:15 - 01:29	11
01:30 - 01:44	15
01:45 - 01:59	8
02:00 - 02:14	3
02:15 - 02:29	6
02:30 - 02:44	3
02:45 - 02:59	4
03:00 - 03:14	7
03:15 - 03:29	3
03:30 - 03:44	10
03:45 - 03:59	6
04:00 - 04:14	7
04:15 - 04:29	7
04:30 - 04:44	9
04:45 - 04:59	12
05:00 - 05:14	21
05:15 - 05:29	19
05:30 - 05:44	18
05:45 - 05:59	36
06:00 - 06:14	71
06:15 - 06:29	86
06:30 - 06:44	100
06:45 - 06:59	140
07:00 - 07:14	194
07:15 - 07:29	192
07:30 - 07:44	174
07:45 - 07:59	182
08:00 - 08:14	209
08:15 - 08:29	241
08:30 - 08:44	236
08:45 - 08:59	166
09:00 - 09:14	161
09:15 - 09:29	166
09:30 - 09:44	161
09:45 - 09:59	172
10:00 - 10:14	159
10:15 - 10:29	169
10:30 - 10:44	139
10:45 - 10:59	174
11:00 - 11:14	199
11:15 - 11:29	195
11:30 - 11:44	203
11:45 - 11:59	192
12:00 - 12:14	216
12:15 - 12:29	240
12:30 - 12:44	244
12:45 - 12:59	236

Daily Vehicle Volume Report

Study Date: Thursday, 09/20/2018
Unit ID: 0186
Location: SW 56TH ST / E OF SW 69TH CT

	Westbound Volume
13:00 - 13:14	205
13:15 - 13:29	229
13:30 - 13:44	244
13:45 - 13:59	242
14:00 - 14:14	234
14:15 - 14:29	292
14:30 - 14:44	283
14:45 - 14:59	289
15:00 - 15:14	322
15:15 - 15:29	365
15:30 - 15:44	357
15:45 - 15:59	367
16:00 - 16:14	355
16:15 - 16:29	390
16:30 - 16:44	373
16:45 - 16:59	361
17:00 - 17:14	362
17:15 - 17:29	331
17:30 - 17:44	339
17:45 - 17:59	308
18:00 - 18:14	323
18:15 - 18:29	333
18:30 - 18:44	278
18:45 - 18:59	279
19:00 - 19:14	273
19:15 - 19:29	251
19:30 - 19:44	257
19:45 - 19:59	238
20:00 - 20:14	235
20:15 - 20:29	231
20:30 - 20:44	149
20:45 - 20:59	155
21:00 - 21:14	125
21:15 - 21:29	127
21:30 - 21:44	119
21:45 - 21:59	97
22:00 - 22:14	92
22:15 - 22:29	86
22:30 - 22:44	64
22:45 - 22:59	53
23:00 - 23:14	75
23:15 - 23:29	53
23:30 - 23:44	61
23:45 - 23:59	32
Totals	**15546**
AM Peak Time	**07:53 - 08:52**
AM Peak Volume	**876**
PM Peak Time	**16:05 - 17:04**
PM Peak Volume	**1506**

Daily Vehicle Volume Report

Study Date: Tuesday, 10/16/2018
Unit ID: 0234
Location: SW 40TH ST / E OF SW 70TH AVE

	Eastbound Volume
00:00 - 00:14	57
00:15 - 00:29	37
00:30 - 00:44	47
00:45 - 00:59	36
01:00 - 01:14	36
01:15 - 01:29	29
01:30 - 01:44	19
01:45 - 01:59	25
02:00 - 02:14	15
02:15 - 02:29	17
02:30 - 02:44	22
02:45 - 02:59	15
03:00 - 03:14	17
03:15 - 03:29	23
03:30 - 03:44	23
03:45 - 03:59	21
04:00 - 04:14	28
04:15 - 04:29	26
04:30 - 04:44	64
04:45 - 04:59	68
05:00 - 05:14	80
05:15 - 05:29	143
05:30 - 05:44	209
05:45 - 05:59	255
06:00 - 06:14	335
06:15 - 06:29	502
06:30 - 06:44	594
06:45 - 06:59	685
07:00 - 07:14	676
07:15 - 07:29	757
07:30 - 07:44	701
07:45 - 07:59	722
08:00 - 08:14	709
08:15 - 08:29	726
08:30 - 08:44	677
08:45 - 08:59	685
09:00 - 09:14	677
09:15 - 09:29	596
09:30 - 09:44	533
09:45 - 09:59	575
10:00 - 10:14	498
10:15 - 10:29	515
10:30 - 10:44	507
10:45 - 10:59	570
11:00 - 11:14	473
11:15 - 11:29	518
11:30 - 11:44	501
11:45 - 11:59	478
12:00 - 12:14	486
12:15 - 12:29	529
12:30 - 12:44	525
12:45 - 12:59	506

Daily Vehicle Volume Report

Study Date: Tuesday, 10/16/2018
Unit ID: 0234
Location: SW 40TH ST / E OF SW 70TH AVE

	Eastbound Volume
13:00 - 13:14	519
13:15 - 13:29	510
13:30 - 13:44	463
13:45 - 13:59	512
14:00 - 14:14	485
14:15 - 14:29	476
14:30 - 14:44	487
14:45 - 14:59	486
15:00 - 15:14	514
15:15 - 15:29	448
15:30 - 15:44	472
15:45 - 15:59	464
16:00 - 16:14	483
16:15 - 16:29	450
16:30 - 16:44	468
16:45 - 16:59	443
17:00 - 17:14	502
17:15 - 17:29	472
17:30 - 17:44	469
17:45 - 17:59	458
18:00 - 18:14	421
18:15 - 18:29	460
18:30 - 18:44	436
18:45 - 18:59	418
19:00 - 19:14	394
19:15 - 19:29	385
19:30 - 19:44	406
19:45 - 19:59	336
20:00 - 20:14	337
20:15 - 20:29	293
20:30 - 20:44	273
20:45 - 20:59	275
21:00 - 21:14	241
21:15 - 21:29	223
21:30 - 21:44	217
21:45 - 21:59	200
22:00 - 22:14	190
22:15 - 22:29	171
22:30 - 22:44	150
22:45 - 22:59	139
23:00 - 23:14	109
23:15 - 23:29	106
23:30 - 23:44	108
23:45 - 23:59	74
Totals	**33511**
AM Peak Time	**07:21 - 08:20**
AM Peak Volume	**2903**
PM Peak Time	**12:32 - 13:31**
PM Peak Volume	**2083**

Daily Vehicle Volume Report

Study Date: Wednesday, 10/17/2018
Unit ID: 0234
Location: SW 40TH ST / E OF SW 70TH AVE

	Eastbound Volume
00:00 - 00:14	71
00:15 - 00:29	66
00:30 - 00:44	48
00:45 - 00:59	45
01:00 - 01:14	31
01:15 - 01:29	23
01:30 - 01:44	17
01:45 - 01:59	25
02:00 - 02:14	16
02:15 - 02:29	22
02:30 - 02:44	21
02:45 - 02:59	14
03:00 - 03:14	16
03:15 - 03:29	19
03:30 - 03:44	20
03:45 - 03:59	17
04:00 - 04:14	28
04:15 - 04:29	35
04:30 - 04:44	54
04:45 - 04:59	53
05:00 - 05:14	94
05:15 - 05:29	125
05:30 - 05:44	196
05:45 - 05:59	273
06:00 - 06:14	329
06:15 - 06:29	484
06:30 - 06:44	616
06:45 - 06:59	663
07:00 - 07:14	708
07:15 - 07:29	718
07:30 - 07:44	729
07:45 - 07:59	687
08:00 - 08:14	688
08:15 - 08:29	695
08:30 - 08:44	714
08:45 - 08:59	702
09:00 - 09:14	692
09:15 - 09:29	611
09:30 - 09:44	550
09:45 - 09:59	600
10:00 - 10:14	501
10:15 - 10:29	527
10:30 - 10:44	526
10:45 - 10:59	511
11:00 - 11:14	474
11:15 - 11:29	515
11:30 - 11:44	520
11:45 - 11:59	503
12:00 - 12:14	491
12:15 - 12:29	507
12:30 - 12:44	516
12:45 - 12:59	466

Daily Vehicle Volume Report

Study Date: Wednesday, 10/17/2018
Unit ID: 0234
Location: SW 40TH ST / E OF SW 70TH AVE

	Eastbound Volume
13:00 - 13:14	545
13:15 - 13:29	520
13:30 - 13:44	490
13:45 - 13:59	500
14:00 - 14:14	497
14:15 - 14:29	478
14:30 - 14:44	523
14:45 - 14:59	526
15:00 - 15:14	454
15:15 - 15:29	488
15:30 - 15:44	471
15:45 - 15:59	466
16:00 - 16:14	466
16:15 - 16:29	462
16:30 - 16:44	458
16:45 - 16:59	456
17:00 - 17:14	496
17:15 - 17:29	496
17:30 - 17:44	528
17:45 - 17:59	471
18:00 - 18:14	475
18:15 - 18:29	417
18:30 - 18:44	466
18:45 - 18:59	437
19:00 - 19:14	455
19:15 - 19:29	412
19:30 - 19:44	406
19:45 - 19:59	370
20:00 - 20:14	319
20:15 - 20:29	325
20:30 - 20:44	297
20:45 - 20:59	301
21:00 - 21:14	278
21:15 - 21:29	249
21:30 - 21:44	259
21:45 - 21:59	225
22:00 - 22:14	221
22:15 - 22:29	182
22:30 - 22:44	190
22:45 - 22:59	144
23:00 - 23:14	105
23:15 - 23:29	101
23:30 - 23:44	90
23:45 - 23:59	87
Totals	**34174**
AM Peak Time	**06:52 - 07:51**
AM Peak Volume	**2872**
PM Peak Time	**12:32 - 13:31**
PM Peak Volume	**2056**

Daily Vehicle Volume Report

Study Date: Thursday, 10/18/2018
Unit ID: 0234
Location: SW 40TH ST / E OF SW 70TH AVE

	Eastbound Volume
00:00 - 00:14	67
00:15 - 00:29	65
00:30 - 00:44	48
00:45 - 00:59	42
01:00 - 01:14	43
01:15 - 01:29	23
01:30 - 01:44	26
01:45 - 01:59	26
02:00 - 02:14	14
02:15 - 02:29	28
02:30 - 02:44	23
02:45 - 02:59	25
03:00 - 03:14	15
03:15 - 03:29	17
03:30 - 03:44	23
03:45 - 03:59	29
04:00 - 04:14	22
04:15 - 04:29	33
04:30 - 04:44	45
04:45 - 04:59	72
05:00 - 05:14	91
05:15 - 05:29	126
05:30 - 05:44	193
05:45 - 05:59	262
06:00 - 06:14	351
06:15 - 06:29	491
06:30 - 06:44	614
06:45 - 06:59	680
07:00 - 07:14	709
07:15 - 07:29	694
07:30 - 07:44	674
07:45 - 07:59	685
08:00 - 08:14	645
08:15 - 08:29	723
08:30 - 08:44	718
08:45 - 08:59	694
09:00 - 09:14	657
09:15 - 09:29	663
09:30 - 09:44	526
09:45 - 09:59	578
10:00 - 10:14	577
10:15 - 10:29	492
10:30 - 10:44	541
10:45 - 10:59	500
11:00 - 11:14	459
11:15 - 11:29	523
11:30 - 11:44	507
11:45 - 11:59	478
12:00 - 12:14	495
12:15 - 12:29	483
12:30 - 12:44	531
12:45 - 12:59	497

Daily Vehicle Volume Report

Study Date: Thursday, 10/18/2018
Unit ID: 0234
Location: SW 40TH ST / E OF SW 70TH AVE

	Eastbound Volume
13:00 - 13:14	521
13:15 - 13:29	493
13:30 - 13:44	490
13:45 - 13:59	500
14:00 - 14:14	484
14:15 - 14:29	496
14:30 - 14:44	509
14:45 - 14:59	493
15:00 - 15:14	463
15:15 - 15:29	484
15:30 - 15:44	536
15:45 - 15:59	508
16:00 - 16:14	472
16:15 - 16:29	463
16:30 - 16:44	456
16:45 - 16:59	410
17:00 - 17:14	519
17:15 - 17:29	492
17:30 - 17:44	456
17:45 - 17:59	481
18:00 - 18:14	459
18:15 - 18:29	448
18:30 - 18:44	432
18:45 - 18:59	485
19:00 - 19:14	405
19:15 - 19:29	372
19:30 - 19:44	387
19:45 - 19:59	395
20:00 - 20:14	343
20:15 - 20:29	352
20:30 - 20:44	295
20:45 - 20:59	289
21:00 - 21:14	266
21:15 - 21:29	326
21:30 - 21:44	298
21:45 - 21:59	262
22:00 - 22:14	255
22:15 - 22:29	221
22:30 - 22:44	190
22:45 - 22:59	162
23:00 - 23:14	140
23:15 - 23:29	133
23:30 - 23:44	94
23:45 - 23:59	79
Totals	**34357**
AM Peak Time	**08:05 - 09:04**
AM Peak Volume	**2815**
PM Peak Time	**12:36 - 13:35**
PM Peak Volume	**2069**

Daily Vehicle Volume Report

Study Date: Tuesday, 10/16/2018
Unit ID: 0208
Location: SW 40TH ST / E OF SW 70TH AVE

	Westbound Volume
00:00 - 00:14	83
00:15 - 00:29	72
00:30 - 00:44	69
00:45 - 00:59	46
01:00 - 01:14	38
01:15 - 01:29	35
01:30 - 01:44	28
01:45 - 01:59	28
02:00 - 02:14	30
02:15 - 02:29	22
02:30 - 02:44	28
02:45 - 02:59	27
03:00 - 03:14	26
03:15 - 03:29	18
03:30 - 03:44	13
03:45 - 03:59	19
04:00 - 04:14	22
04:15 - 04:29	35
04:30 - 04:44	26
04:45 - 04:59	47
05:00 - 05:14	44
05:15 - 05:29	77
05:30 - 05:44	106
05:45 - 05:59	140
06:00 - 06:14	129
06:15 - 06:29	177
06:30 - 06:44	252
06:45 - 06:59	296
07:00 - 07:14	354
07:15 - 07:29	419
07:30 - 07:44	474
07:45 - 07:59	506
08:00 - 08:14	452
08:15 - 08:29	488
08:30 - 08:44	457
08:45 - 08:59	469
09:00 - 09:14	455
09:15 - 09:29	437
09:30 - 09:44	427
09:45 - 09:59	389
10:00 - 10:14	413
10:15 - 10:29	410
10:30 - 10:44	396
10:45 - 10:59	474
11:00 - 11:14	420
11:15 - 11:29	433
11:30 - 11:44	438
11:45 - 11:59	468
12:00 - 12:14	487
12:15 - 12:29	517
12:30 - 12:44	475
12:45 - 12:59	492

Daily Vehicle Volume Report

Study Date: Tuesday, 10/16/2018
Unit ID: 0208
Location: SW 40TH ST / E OF SW 70TH AVE

	Westbound Volume
13:00 - 13:14	487
13:15 - 13:29	517
13:30 - 13:44	525
13:45 - 13:59	496
14:00 - 14:14	524
14:15 - 14:29	550
14:30 - 14:44	547
14:45 - 14:59	603
15:00 - 15:14	604
15:15 - 15:29	617
15:30 - 15:44	623
15:45 - 15:59	613
16:00 - 16:14	551
16:15 - 16:29	463
16:30 - 16:44	565
16:45 - 16:59	522
17:00 - 17:14	489
17:15 - 17:29	426
17:30 - 17:44	453
17:45 - 17:59	390
18:00 - 18:14	498
18:15 - 18:29	482
18:30 - 18:44	569
18:45 - 18:59	545
19:00 - 19:14	519
19:15 - 19:29	555
19:30 - 19:44	512
19:45 - 19:59	470
20:00 - 20:14	410
20:15 - 20:29	386
20:30 - 20:44	356
20:45 - 20:59	342
21:00 - 21:14	304
21:15 - 21:29	273
21:30 - 21:44	241
21:45 - 21:59	247
22:00 - 22:14	227
22:15 - 22:29	237
22:30 - 22:44	164
22:45 - 22:59	149
23:00 - 23:14	142
23:15 - 23:29	162
23:30 - 23:44	127
23:45 - 23:59	107
Totals	**31272**
AM Peak Time	**07:36 - 08:35**
AM Peak Volume	**1926**
PM Peak Time	**15:04 - 16:03**
PM Peak Volume	**2466**

Daily Vehicle Volume Report

Study Date: Wednesday, 10/17/2018
Unit ID: 0208
Location: SW 40TH ST / E OF SW 70TH AVE

	Westbound Volume
00:00 - 00:14	85
00:15 - 00:29	80
00:30 - 00:44	51
00:45 - 00:59	54
01:00 - 01:14	47
01:15 - 01:29	59
01:30 - 01:44	31
01:45 - 01:59	31
02:00 - 02:14	35
02:15 - 02:29	29
02:30 - 02:44	23
02:45 - 02:59	20
03:00 - 03:14	27
03:15 - 03:29	10
03:30 - 03:44	30
03:45 - 03:59	19
04:00 - 04:14	33
04:15 - 04:29	21
04:30 - 04:44	43
04:45 - 04:59	42
05:00 - 05:14	48
05:15 - 05:29	86
05:30 - 05:44	87
05:45 - 05:59	139
06:00 - 06:14	126
06:15 - 06:29	171
06:30 - 06:44	226
06:45 - 06:59	260
07:00 - 07:14	353
07:15 - 07:29	373
07:30 - 07:44	454
07:45 - 07:59	420
08:00 - 08:14	403
08:15 - 08:29	448
08:30 - 08:44	433
08:45 - 08:59	437
09:00 - 09:14	399
09:15 - 09:29	421
09:30 - 09:44	468
09:45 - 09:59	440
10:00 - 10:14	417
10:15 - 10:29	431
10:30 - 10:44	465
10:45 - 10:59	473
11:00 - 11:14	460
11:15 - 11:29	463
11:30 - 11:44	468
11:45 - 11:59	484
12:00 - 12:14	497
12:15 - 12:29	534
12:30 - 12:44	508
12:45 - 12:59	531

Daily Vehicle Volume Report

Study Date: Wednesday, 10/17/2018
Unit ID: 0208
Location: SW 40TH ST / E OF SW 70TH AVE

	Westbound Volume
13:00 - 13:14	543
13:15 - 13:29	537
13:30 - 13:44	547
13:45 - 13:59	549
14:00 - 14:14	486
14:15 - 14:29	566
14:30 - 14:44	562
14:45 - 14:59	560
15:00 - 15:14	588
15:15 - 15:29	605
15:30 - 15:44	615
15:45 - 15:59	590
16:00 - 16:14	555
16:15 - 16:29	524
16:30 - 16:44	606
16:45 - 16:59	534
17:00 - 17:14	519
17:15 - 17:29	479
17:30 - 17:44	463
17:45 - 17:59	546
18:00 - 18:14	540
18:15 - 18:29	456
18:30 - 18:44	541
18:45 - 18:59	557
19:00 - 19:14	545
19:15 - 19:29	518
19:30 - 19:44	448
19:45 - 19:59	499
20:00 - 20:14	399
20:15 - 20:29	411
20:30 - 20:44	372
20:45 - 20:59	311
21:00 - 21:14	319
21:15 - 21:29	302
21:30 - 21:44	323
21:45 - 21:59	264
22:00 - 22:14	240
22:15 - 22:29	230
22:30 - 22:44	201
22:45 - 22:59	177
23:00 - 23:14	148
23:15 - 23:29	148
23:30 - 23:44	151
23:45 - 23:59	111
Totals	**31878**
AM Peak Time	**10:34 - 11:33**
AM Peak Volume	**1899**
PM Peak Time	**15:03 - 16:02**
PM Peak Volume	**2407**

Daily Vehicle Volume Report

Study Date: Thursday, 10/18/2018
Unit ID: 0208
Location: SW 40TH ST / E OF SW 70TH AVE

	Westbound Volume
00:00 - 00:14	107
00:15 - 00:29	89
00:30 - 00:44	63
00:45 - 00:59	68
01:00 - 01:14	43
01:15 - 01:29	44
01:30 - 01:44	35
01:45 - 01:59	28
02:00 - 02:14	41
02:15 - 02:29	32
02:30 - 02:44	34
02:45 - 02:59	27
03:00 - 03:14	19
03:15 - 03:29	26
03:30 - 03:44	27
03:45 - 03:59	9
04:00 - 04:14	23
04:15 - 04:29	33
04:30 - 04:44	36
04:45 - 04:59	42
05:00 - 05:14	45
05:15 - 05:29	83
05:30 - 05:44	100
05:45 - 05:59	132
06:00 - 06:14	140
06:15 - 06:29	188
06:30 - 06:44	260
06:45 - 06:59	277
07:00 - 07:14	353
07:15 - 07:29	439
07:30 - 07:44	485
07:45 - 07:59	490
08:00 - 08:14	471
08:15 - 08:29	466
08:30 - 08:44	525
08:45 - 08:59	469
09:00 - 09:14	441
09:15 - 09:29	432
09:30 - 09:44	411
09:45 - 09:59	416
10:00 - 10:14	444
10:15 - 10:29	482
10:30 - 10:44	386
10:45 - 10:59	455
11:00 - 11:14	456
11:15 - 11:29	479
11:30 - 11:44	472
11:45 - 11:59	439
12:00 - 12:14	456
12:15 - 12:29	491
12:30 - 12:44	478
12:45 - 12:59	469

Daily Vehicle Volume Report

Study Date: Thursday, 10/18/2018
Unit ID: 0208
Location: SW 40TH ST / E OF SW 70TH AVE

	Westbound Volume
13:00 - 13:14	497
13:15 - 13:29	539
13:30 - 13:44	549
13:45 - 13:59	494
14:00 - 14:14	496
14:15 - 14:29	561
14:30 - 14:44	589
14:45 - 14:59	585
15:00 - 15:14	662
15:15 - 15:29	633
15:30 - 15:44	608
15:45 - 15:59	607
16:00 - 16:14	437
16:15 - 16:29	517
16:30 - 16:44	603
16:45 - 16:59	530
17:00 - 17:14	429
17:15 - 17:29	463
17:30 - 17:44	516
17:45 - 17:59	495
18:00 - 18:14	556
18:15 - 18:29	464
18:30 - 18:44	504
18:45 - 18:59	543
19:00 - 19:14	525
19:15 - 19:29	546
19:30 - 19:44	519
19:45 - 19:59	510
20:00 - 20:14	427
20:15 - 20:29	461
20:30 - 20:44	424
20:45 - 20:59	335
21:00 - 21:14	349
21:15 - 21:29	306
21:30 - 21:44	300
21:45 - 21:59	273
22:00 - 22:14	284
22:15 - 22:29	276
22:30 - 22:44	210
22:45 - 22:59	220
23:00 - 23:14	192
23:15 - 23:29	194
23:30 - 23:44	161
23:45 - 23:59	121
Totals	**32466**
AM Peak Time	**07:51 - 08:50**
AM Peak Volume	**1965**
PM Peak Time	**15:03 - 16:02**
PM Peak Volume	**2518**

Daily Vehicle Volume Report

Study Date: Tuesday, 09/18/2018
Unit ID: 0070
Location: N WATERWAY DR / W OF SW 69TH AV

	Eastbound Volume
00:00 - 00:14	2
00:15 - 00:29	2
00:30 - 00:44	3
00:45 - 00:59	2
01:00 - 01:14	2
01:15 - 01:29	3
01:30 - 01:44	2
01:45 - 01:59	1
02:00 - 02:14	2
02:15 - 02:29	0
02:30 - 02:44	0
02:45 - 02:59	0
03:00 - 03:14	1
03:15 - 03:29	0
03:30 - 03:44	1
03:45 - 03:59	0
04:00 - 04:14	0
04:15 - 04:29	1
04:30 - 04:44	1
04:45 - 04:59	1
05:00 - 05:14	3
05:15 - 05:29	2
05:30 - 05:44	5
05:45 - 05:59	6
06:00 - 06:14	11
06:15 - 06:29	11
06:30 - 06:44	32
06:45 - 06:59	45
07:00 - 07:14	71
07:15 - 07:29	99
07:30 - 07:44	126
07:45 - 07:59	149
08:00 - 08:14	167
08:15 - 08:29	171
08:30 - 08:44	144
08:45 - 08:59	116
09:00 - 09:14	87
09:15 - 09:29	60
09:30 - 09:44	39
09:45 - 09:59	47
10:00 - 10:14	40
10:15 - 10:29	48
10:30 - 10:44	36
10:45 - 10:59	30
11:00 - 11:14	36
11:15 - 11:29	42
11:30 - 11:44	33
11:45 - 11:59	33
12:00 - 12:14	33
12:15 - 12:29	49
12:30 - 12:44	42
12:45 - 12:59	50

Daily Vehicle Volume Report

Study Date: Tuesday, 09/18/2018
Unit ID: 0070
Location: N WATERWAY DR / W OF SW 69TH AV

	Eastbound Volume
13:00 - 13:14	43
13:15 - 13:29	33
13:30 - 13:44	33
13:45 - 13:59	35
14:00 - 14:14	43
14:15 - 14:29	43
14:30 - 14:44	51
14:45 - 14:59	43
15:00 - 15:14	45
15:15 - 15:29	42
15:30 - 15:44	38
15:45 - 15:59	46
16:00 - 16:14	55
16:15 - 16:29	57
16:30 - 16:44	59
16:45 - 16:59	48
17:00 - 17:14	70
17:15 - 17:29	60
17:30 - 17:44	63
17:45 - 17:59	42
18:00 - 18:14	37
18:15 - 18:29	44
18:30 - 18:44	42
18:45 - 18:59	37
19:00 - 19:14	35
19:15 - 19:29	41
19:30 - 19:44	36
19:45 - 19:59	43
20:00 - 20:14	48
20:15 - 20:29	45
20:30 - 20:44	29
20:45 - 20:59	30
21:00 - 21:14	30
21:15 - 21:29	29
21:30 - 21:44	17
21:45 - 21:59	9
22:00 - 22:14	16
22:15 - 22:29	7
22:30 - 22:44	9
22:45 - 22:59	14
23:00 - 23:14	8
23:15 - 23:29	1
23:30 - 23:44	6
23:45 - 23:59	1
Totals	**3450**
AM Peak Time	**07:47 - 08:46**
AM Peak Volume	**649**
PM Peak Time	**16:24 - 17:23**
PM Peak Volume	**247**

Daily Vehicle Volume Report

Study Date: Wednesday, 09/19/2018
Unit ID: 0070
Location: N WATERWAY DR / W OF SW 69TH AV

	Eastbound Volume
00:00 - 00:14	9
00:15 - 00:29	2
00:30 - 00:44	4
00:45 - 00:59	1
01:00 - 01:14	3
01:15 - 01:29	3
01:30 - 01:44	1
01:45 - 01:59	1
02:00 - 02:14	1
02:15 - 02:29	0
02:30 - 02:44	2
02:45 - 02:59	1
03:00 - 03:14	0
03:15 - 03:29	3
03:30 - 03:44	0
03:45 - 03:59	1
04:00 - 04:14	0
04:15 - 04:29	1
04:30 - 04:44	0
04:45 - 04:59	2
05:00 - 05:14	1
05:15 - 05:29	4
05:30 - 05:44	4
05:45 - 05:59	5
06:00 - 06:14	9
06:15 - 06:29	19
06:30 - 06:44	20
06:45 - 06:59	33
07:00 - 07:14	71
07:15 - 07:29	75
07:30 - 07:44	105
07:45 - 07:59	126
08:00 - 08:14	122
08:15 - 08:29	116
08:30 - 08:44	117
08:45 - 08:59	90
09:00 - 09:14	69
09:15 - 09:29	39
09:30 - 09:44	52
09:45 - 09:59	62
10:00 - 10:14	41
10:15 - 10:29	40
10:30 - 10:44	52
10:45 - 10:59	41
11:00 - 11:14	37
11:15 - 11:29	43
11:30 - 11:44	28
11:45 - 11:59	42
12:00 - 12:14	41
12:15 - 12:29	47
12:30 - 12:44	45
12:45 - 12:59	52

Daily Vehicle Volume Report

Study Date: Wednesday, 09/19/2018
Unit ID: 0070
Location: N WATERWAY DR / W OF SW 69TH AV

	Eastbound Volume
13:00 - 13:14	58
13:15 - 13:29	53
13:30 - 13:44	26
13:45 - 13:59	46
14:00 - 14:14	40
14:15 - 14:29	44
14:30 - 14:44	38
14:45 - 14:59	55
15:00 - 15:14	46
15:15 - 15:29	40
15:30 - 15:44	45
15:45 - 15:59	42
16:00 - 16:14	58
16:15 - 16:29	51
16:30 - 16:44	47
16:45 - 16:59	45
17:00 - 17:14	35
17:15 - 17:29	55
17:30 - 17:44	58
17:45 - 17:59	56
18:00 - 18:14	46
18:15 - 18:29	45
18:30 - 18:44	55
18:45 - 18:59	37
19:00 - 19:14	42
19:15 - 19:29	41
19:30 - 19:44	28
19:45 - 19:59	41
20:00 - 20:14	32
20:15 - 20:29	36
20:30 - 20:44	24
20:45 - 20:59	30
21:00 - 21:14	20
21:15 - 21:29	26
21:30 - 21:44	24
21:45 - 21:59	17
22:00 - 22:14	22
22:15 - 22:29	6
22:30 - 22:44	11
22:45 - 22:59	6
23:00 - 23:14	10
23:15 - 23:29	9
23:30 - 23:44	5
23:45 - 23:59	4
Totals	**3238**
AM Peak Time	**07:40 - 08:39**
AM Peak Volume	**501**
PM Peak Time	**17:14 - 18:13**
PM Peak Volume	**215**

Daily Vehicle Volume Report

Study Date: Thursday, 09/20/2018
Unit ID: 0070
Location: N WATERWAY DR / W OF SW 69TH AV

	Eastbound Volume
00:00 - 00:14	2
00:15 - 00:29	1
00:30 - 00:44	5
00:45 - 00:59	0
01:00 - 01:14	2
01:15 - 01:29	4
01:30 - 01:44	0
01:45 - 01:59	0
02:00 - 02:14	0
02:15 - 02:29	1
02:30 - 02:44	0
02:45 - 02:59	0
03:00 - 03:14	2
03:15 - 03:29	0
03:30 - 03:44	1
03:45 - 03:59	2
04:00 - 04:14	0
04:15 - 04:29	0
04:30 - 04:44	0
04:45 - 04:59	2
05:00 - 05:14	0
05:15 - 05:29	3
05:30 - 05:44	4
05:45 - 05:59	6
06:00 - 06:14	7
06:15 - 06:29	19
06:30 - 06:44	34
06:45 - 06:59	32
07:00 - 07:14	79
07:15 - 07:29	90
07:30 - 07:44	129
07:45 - 07:59	137
08:00 - 08:14	180
08:15 - 08:29	173
08:30 - 08:44	140
08:45 - 08:59	119
09:00 - 09:14	72
09:15 - 09:29	55
09:30 - 09:44	41
09:45 - 09:59	51
10:00 - 10:14	46
10:15 - 10:29	35
10:30 - 10:44	45
10:45 - 10:59	34
11:00 - 11:14	46
11:15 - 11:29	49
11:30 - 11:44	41
11:45 - 11:59	35
12:00 - 12:14	32
12:15 - 12:29	43
12:30 - 12:44	39
12:45 - 12:59	49

Daily Vehicle Volume Report

Study Date: Thursday, 09/20/2018
Unit ID: 0070
Location: N WATERWAY DR / W OF SW 69TH AV

	Eastbound Volume
13:00 - 13:14	41
13:15 - 13:29	44
13:30 - 13:44	45
13:45 - 13:59	34
14:00 - 14:14	40
14:15 - 14:29	58
14:30 - 14:44	39
14:45 - 14:59	47
15:00 - 15:14	55
15:15 - 15:29	52
15:30 - 15:44	45
15:45 - 15:59	47
16:00 - 16:14	72
16:15 - 16:29	48
16:30 - 16:44	49
16:45 - 16:59	34
17:00 - 17:14	60
17:15 - 17:29	57
17:30 - 17:44	55
17:45 - 17:59	50
18:00 - 18:14	62
18:15 - 18:29	55
18:30 - 18:44	50
18:45 - 18:59	43
19:00 - 19:14	40
19:15 - 19:29	35
19:30 - 19:44	38
19:45 - 19:59	35
20:00 - 20:14	29
20:15 - 20:29	31
20:30 - 20:44	31
20:45 - 20:59	18
21:00 - 21:14	16
21:15 - 21:29	28
21:30 - 21:44	12
21:45 - 21:59	12
22:00 - 22:14	12
22:15 - 22:29	15
22:30 - 22:44	11
22:45 - 22:59	6
23:00 - 23:14	8
23:15 - 23:29	10
23:30 - 23:44	3
23:45 - 23:59	3
Totals	**3462**
AM Peak Time	**07:40 - 08:39**
AM Peak Volume	**643**
PM Peak Time	**17:25 - 18:24**
PM Peak Volume	**228**

Daily Vehicle Volume Report

Study Date: Tuesday, 09/18/2018
Unit ID: 0232
Location: N WATERWAY DR / W OF SW 69TH AV

	Westbound Volume
00:00 - 00:14	1
00:15 - 00:29	2
00:30 - 00:44	1
00:45 - 00:59	1
01:00 - 01:14	0
01:15 - 01:29	1
01:30 - 01:44	4
01:45 - 01:59	0
02:00 - 02:14	0
02:15 - 02:29	0
02:30 - 02:44	0
02:45 - 02:59	0
03:00 - 03:14	0
03:15 - 03:29	1
03:30 - 03:44	1
03:45 - 03:59	0
04:00 - 04:14	1
04:15 - 04:29	0
04:30 - 04:44	1
04:45 - 04:59	3
05:00 - 05:14	4
05:15 - 05:29	4
05:30 - 05:44	4
05:45 - 05:59	11
06:00 - 06:14	11
06:15 - 06:29	16
06:30 - 06:44	19
06:45 - 06:59	26
07:00 - 07:14	35
07:15 - 07:29	50
07:30 - 07:44	45
07:45 - 07:59	47
08:00 - 08:14	55
08:15 - 08:29	51
08:30 - 08:44	45
08:45 - 08:59	54
09:00 - 09:14	33
09:15 - 09:29	32
09:30 - 09:44	33
09:45 - 09:59	42
10:00 - 10:14	24
10:15 - 10:29	40
10:30 - 10:44	34
10:45 - 10:59	34
11:00 - 11:14	37
11:15 - 11:29	42
11:30 - 11:44	30
11:45 - 11:59	29
12:00 - 12:14	34
12:15 - 12:29	40
12:30 - 12:44	38
12:45 - 12:59	45

Daily Vehicle Volume Report

Study Date: Tuesday, 09/18/2018
Unit ID: 0232
Location: N WATERWAY DR / W OF SW 69TH AV

	Westbound Volume
13:00 - 13:14	44
13:15 - 13:29	49
13:30 - 13:44	42
13:45 - 13:59	45
14:00 - 14:14	53
14:15 - 14:29	55
14:30 - 14:44	47
14:45 - 14:59	50
15:00 - 15:14	68
15:15 - 15:29	79
15:30 - 15:44	103
15:45 - 15:59	97
16:00 - 16:14	133
16:15 - 16:29	163
16:30 - 16:44	170
16:45 - 16:59	164
17:00 - 17:14	195
17:15 - 17:29	257
17:30 - 17:44	227
17:45 - 17:59	194
18:00 - 18:14	187
18:15 - 18:29	213
18:30 - 18:44	171
18:45 - 18:59	91
19:00 - 19:14	59
19:15 - 19:29	50
19:30 - 19:44	34
19:45 - 19:59	31
20:00 - 20:14	39
20:15 - 20:29	22
20:30 - 20:44	19
20:45 - 20:59	21
21:00 - 21:14	22
21:15 - 21:29	10
21:30 - 21:44	4
21:45 - 21:59	8
22:00 - 22:14	8
22:15 - 22:29	3
22:30 - 22:44	3
22:45 - 22:59	7
23:00 - 23:14	4
23:15 - 23:29	2
23:30 - 23:44	1
23:45 - 23:59	1
Totals	**4306**
AM Peak Time	**07:23 - 08:22**
AM Peak Volume	**215**
PM Peak Time	**17:04 - 18:03**
PM Peak Volume	**901**

Daily Vehicle Volume Report

Study Date: Wednesday, 09/19/2018
Unit ID: 0232
Location: N WATERWAY DR / W OF SW 69TH AV

	Westbound Volume
00:00 - 00:14	0
00:15 - 00:29	2
00:30 - 00:44	1
00:45 - 00:59	0
01:00 - 01:14	0
01:15 - 01:29	2
01:30 - 01:44	0
01:45 - 01:59	0
02:00 - 02:14	0
02:15 - 02:29	0
02:30 - 02:44	1
02:45 - 02:59	1
03:00 - 03:14	0
03:15 - 03:29	1
03:30 - 03:44	0
03:45 - 03:59	1
04:00 - 04:14	1
04:15 - 04:29	0
04:30 - 04:44	2
04:45 - 04:59	3
05:00 - 05:14	5
05:15 - 05:29	2
05:30 - 05:44	5
05:45 - 05:59	7
06:00 - 06:14	9
06:15 - 06:29	18
06:30 - 06:44	18
06:45 - 06:59	29
07:00 - 07:14	28
07:15 - 07:29	46
07:30 - 07:44	42
07:45 - 07:59	47
08:00 - 08:14	51
08:15 - 08:29	42
08:30 - 08:44	47
08:45 - 08:59	42
09:00 - 09:14	36
09:15 - 09:29	27
09:30 - 09:44	41
09:45 - 09:59	39
10:00 - 10:14	36
10:15 - 10:29	33
10:30 - 10:44	32
10:45 - 10:59	43
11:00 - 11:14	35
11:15 - 11:29	32
11:30 - 11:44	26
11:45 - 11:59	36
12:00 - 12:14	42
12:15 - 12:29	39
12:30 - 12:44	39
12:45 - 12:59	46

Daily Vehicle Volume Report

Study Date: Wednesday, 09/19/2018
Unit ID: 0232
Location: N WATERWAY DR / W OF SW 69TH AV

	Westbound Volume
13:00 - 13:14	35
13:15 - 13:29	53
13:30 - 13:44	57
13:45 - 13:59	38
14:00 - 14:14	58
14:15 - 14:29	52
14:30 - 14:44	58
14:45 - 14:59	66
15:00 - 15:14	52
15:15 - 15:29	71
15:30 - 15:44	83
15:45 - 15:59	91
16:00 - 16:14	98
16:15 - 16:29	117
16:30 - 16:44	133
16:45 - 16:59	136
17:00 - 17:14	167
17:15 - 17:29	214
17:30 - 17:44	178
17:45 - 17:59	182
18:00 - 18:14	156
18:15 - 18:29	159
18:30 - 18:44	99
18:45 - 18:59	84
19:00 - 19:14	52
19:15 - 19:29	50
19:30 - 19:44	50
19:45 - 19:59	30
20:00 - 20:14	23
20:15 - 20:29	19
20:30 - 20:44	14
20:45 - 20:59	17
21:00 - 21:14	8
21:15 - 21:29	10
21:30 - 21:44	6
21:45 - 21:59	9
22:00 - 22:14	4
22:15 - 22:29	5
22:30 - 22:44	7
22:45 - 22:59	2
23:00 - 23:14	4
23:15 - 23:29	4
23:30 - 23:44	0
23:45 - 23:59	3
Totals	**3789**
AM Peak Time	**07:14 - 08:13**
AM Peak Volume	**191**
PM Peak Time	**17:05 - 18:04**
PM Peak Volume	**757**

Daily Vehicle Volume Report

Study Date: Thursday, 09/20/2018
Unit ID: 0232
Location: N WATERWAY DR / W OF SW 69TH AV

	Westbound Volume
00:00 - 00:14	0
00:15 - 00:29	0
00:30 - 00:44	1
00:45 - 00:59	1
01:00 - 01:14	0
01:15 - 01:29	1
01:30 - 01:44	1
01:45 - 01:59	2
02:00 - 02:14	0
02:15 - 02:29	0
02:30 - 02:44	1
02:45 - 02:59	0
03:00 - 03:14	0
03:15 - 03:29	0
03:30 - 03:44	1
03:45 - 03:59	3
04:00 - 04:14	2
04:15 - 04:29	1
04:30 - 04:44	1
04:45 - 04:59	3
05:00 - 05:14	2
05:15 - 05:29	2
05:30 - 05:44	5
05:45 - 05:59	9
06:00 - 06:14	14
06:15 - 06:29	11
06:30 - 06:44	20
06:45 - 06:59	31
07:00 - 07:14	32
07:15 - 07:29	53
07:30 - 07:44	42
07:45 - 07:59	48
08:00 - 08:14	53
08:15 - 08:29	38
08:30 - 08:44	50
08:45 - 08:59	42
09:00 - 09:14	38
09:15 - 09:29	41
09:30 - 09:44	34
09:45 - 09:59	34
10:00 - 10:14	28
10:15 - 10:29	26
10:30 - 10:44	29
10:45 - 10:59	33
11:00 - 11:14	36
11:15 - 11:29	27
11:30 - 11:44	30
11:45 - 11:59	40
12:00 - 12:14	38
12:15 - 12:29	35
12:30 - 12:44	46
12:45 - 12:59	39

Daily Vehicle Volume Report

Study Date: Thursday, 09/20/2018
Unit ID: 0232
Location: N WATERWAY DR / W OF SW 69TH AV

	Westbound Volume
13:00 - 13:14	29
13:15 - 13:29	48
13:30 - 13:44	51
13:45 - 13:59	45
14:00 - 14:14	46
14:15 - 14:29	60
14:30 - 14:44	63
14:45 - 14:59	63
15:00 - 15:14	74
15:15 - 15:29	80
15:30 - 15:44	88
15:45 - 15:59	127
16:00 - 16:14	138
16:15 - 16:29	159
16:30 - 16:44	162
16:45 - 16:59	176
17:00 - 17:14	192
17:15 - 17:29	217
17:30 - 17:44	195
17:45 - 17:59	182
18:00 - 18:14	170
18:15 - 18:29	130
18:30 - 18:44	83
18:45 - 18:59	85
19:00 - 19:14	50
19:15 - 19:29	46
19:30 - 19:44	31
19:45 - 19:59	38
20:00 - 20:14	30
20:15 - 20:29	30
20:30 - 20:44	22
20:45 - 20:59	9
21:00 - 21:14	12
21:15 - 21:29	10
21:30 - 21:44	10
21:45 - 21:59	5
22:00 - 22:14	9
22:15 - 22:29	7
22:30 - 22:44	3
22:45 - 22:59	2
23:00 - 23:14	5
23:15 - 23:29	4
23:30 - 23:44	1
23:45 - 23:59	2
Totals	**4013**
AM Peak Time	**07:17 - 08:16**
AM Peak Volume	**199**
PM Peak Time	**17:07 - 18:06**
PM Peak Volume	**794**

Daily Vehicle Volume Report

Study Date: Tuesday, 09/18/2018
Unit ID: 0149
Location: SW 24TH ST / W OF SW 69TH AV

	Eastbound Volume
00:00 - 00:14	46
00:15 - 00:29	42
00:30 - 00:44	34
00:45 - 00:59	30
01:00 - 01:14	24
01:15 - 01:29	23
01:30 - 01:44	29
01:45 - 01:59	19
02:00 - 02:14	16
02:15 - 02:29	15
02:30 - 02:44	22
02:45 - 02:59	9
03:00 - 03:14	8
03:15 - 03:29	19
03:30 - 03:44	15
03:45 - 03:59	19
04:00 - 04:14	11
04:15 - 04:29	17
04:30 - 04:44	30
04:45 - 04:59	28
05:00 - 05:14	43
05:15 - 05:29	66
05:30 - 05:44	98
05:45 - 05:59	145
06:00 - 06:14	178
06:15 - 06:29	278
06:30 - 06:44	353
06:45 - 06:59	403
07:00 - 07:14	478
07:15 - 07:29	447
07:30 - 07:44	420
07:45 - 07:59	434
08:00 - 08:14	434
08:15 - 08:29	432
08:30 - 08:44	439
08:45 - 08:59	459
09:00 - 09:14	468
09:15 - 09:29	471
09:30 - 09:44	428
09:45 - 09:59	422
10:00 - 10:14	355
10:15 - 10:29	373
10:30 - 10:44	392
10:45 - 10:59	370
11:00 - 11:14	367
11:15 - 11:29	346
11:30 - 11:44	333
11:45 - 11:59	357
12:00 - 12:14	348
12:15 - 12:29	376
12:30 - 12:44	377
12:45 - 12:59	392

Daily Vehicle Volume Report

Study Date: Tuesday, 09/18/2018
Unit ID: 0149
Location: SW 24TH ST / W OF SW 69TH AV

	Eastbound Volume
13:00 - 13:14	434
13:15 - 13:29	350
13:30 - 13:44	346
13:45 - 13:59	359
14:00 - 14:14	339
14:15 - 14:29	374
14:30 - 14:44	367
14:45 - 14:59	392
15:00 - 15:14	344
15:15 - 15:29	326
15:30 - 15:44	343
15:45 - 15:59	366
16:00 - 16:14	358
16:15 - 16:29	339
16:30 - 16:44	397
16:45 - 16:59	322
17:00 - 17:14	332
17:15 - 17:29	335
17:30 - 17:44	349
17:45 - 17:59	313
18:00 - 18:14	291
18:15 - 18:29	304
18:30 - 18:44	307
18:45 - 18:59	342
19:00 - 19:14	333
19:15 - 19:29	325
19:30 - 19:44	224
19:45 - 19:59	225
20:00 - 20:14	254
20:15 - 20:29	261
20:30 - 20:44	240
20:45 - 20:59	204
21:00 - 21:14	262
21:15 - 21:29	220
21:30 - 21:44	207
21:45 - 21:59	195
22:00 - 22:14	164
22:15 - 22:29	156
22:30 - 22:44	120
22:45 - 22:59	114
23:00 - 23:14	85
23:15 - 23:29	71
23:30 - 23:44	64
23:45 - 23:59	53
Totals	**23844**
AM Peak Time	**08:35 - 09:34**
AM Peak Volume	**1856**
PM Peak Time	**12:19 - 13:18**
PM Peak Volume	**1602**

Daily Vehicle Volume Report

Study Date: Wednesday, 09/19/2018
Unit ID: 0149
Location: SW 24TH ST / W OF SW 69TH AV

	Eastbound Volume
00:00 - 00:14	51
00:15 - 00:29	46
00:30 - 00:44	30
00:45 - 00:59	24
01:00 - 01:14	17
01:15 - 01:29	33
01:30 - 01:44	27
01:45 - 01:59	17
02:00 - 02:14	13
02:15 - 02:29	13
02:30 - 02:44	16
02:45 - 02:59	13
03:00 - 03:14	12
03:15 - 03:29	9
03:30 - 03:44	9
03:45 - 03:59	26
04:00 - 04:14	9
04:15 - 04:29	21
04:30 - 04:44	26
04:45 - 04:59	30
05:00 - 05:14	33
05:15 - 05:29	62
05:30 - 05:44	94
05:45 - 05:59	154
06:00 - 06:14	186
06:15 - 06:29	242
06:30 - 06:44	345
06:45 - 06:59	396
07:00 - 07:14	452
07:15 - 07:29	438
07:30 - 07:44	453
07:45 - 07:59	462
08:00 - 08:14	437
08:15 - 08:29	449
08:30 - 08:44	456
08:45 - 08:59	464
09:00 - 09:14	474
09:15 - 09:29	393
09:30 - 09:44	347
09:45 - 09:59	407
10:00 - 10:14	358
10:15 - 10:29	368
10:30 - 10:44	408
10:45 - 10:59	381
11:00 - 11:14	343
11:15 - 11:29	397
11:30 - 11:44	345
11:45 - 11:59	346
12:00 - 12:14	372
12:15 - 12:29	363
12:30 - 12:44	377
12:45 - 12:59	379

Daily Vehicle Volume Report

Study Date: Wednesday, 09/19/2018
Unit ID: 0149
Location: SW 24TH ST / W OF SW 69TH AV

	Eastbound Volume
13:00 - 13:14	402
13:15 - 13:29	360
13:30 - 13:44	390
13:45 - 13:59	335
14:00 - 14:14	362
14:15 - 14:29	384
14:30 - 14:44	357
14:45 - 14:59	374
15:00 - 15:14	330
15:15 - 15:29	343
15:30 - 15:44	330
15:45 - 15:59	356
16:00 - 16:14	346
16:15 - 16:29	348
16:30 - 16:44	367
16:45 - 16:59	328
17:00 - 17:14	358
17:15 - 17:29	358
17:30 - 17:44	347
17:45 - 17:59	373
18:00 - 18:14	369
18:15 - 18:29	350
18:30 - 18:44	354
18:45 - 18:59	344
19:00 - 19:14	352
19:15 - 19:29	334
19:30 - 19:44	338
19:45 - 19:59	316
20:00 - 20:14	307
20:15 - 20:29	260
20:30 - 20:44	252
20:45 - 20:59	262
21:00 - 21:14	208
21:15 - 21:29	232
21:30 - 21:44	202
21:45 - 21:59	260
22:00 - 22:14	256
22:15 - 22:29	147
22:30 - 22:44	125
22:45 - 22:59	99
23:00 - 23:14	89
23:15 - 23:29	80
23:30 - 23:44	79
23:45 - 23:59	68
Totals	**24454**
AM Peak Time	**08:14 - 09:13**
AM Peak Volume	**1844**
PM Peak Time	**12:45 - 13:44**
PM Peak Volume	**1531**

Daily Vehicle Volume Report

Study Date: Thursday, 09/20/2018
Unit ID: 0149
Location: SW 24TH ST / W OF SW 69TH AV

	Eastbound Volume
00:00 - 00:14	61
00:15 - 00:29	46
00:30 - 00:44	39
00:45 - 00:59	30
01:00 - 01:14	28
01:15 - 01:29	29
01:30 - 01:44	19
01:45 - 01:59	20
02:00 - 02:14	17
02:15 - 02:29	18
02:30 - 02:44	10
02:45 - 02:59	18
03:00 - 03:14	6
03:15 - 03:29	12
03:30 - 03:44	11
03:45 - 03:59	23
04:00 - 04:14	21
04:15 - 04:29	21
04:30 - 04:44	35
04:45 - 04:59	36
05:00 - 05:14	57
05:15 - 05:29	73
05:30 - 05:44	98
05:45 - 05:59	154
06:00 - 06:14	188
06:15 - 06:29	271
06:30 - 06:44	362
06:45 - 06:59	427
07:00 - 07:14	485
07:15 - 07:29	420
07:30 - 07:44	421
07:45 - 07:59	449
08:00 - 08:14	429
08:15 - 08:29	434
08:30 - 08:44	448
08:45 - 08:59	463
09:00 - 09:14	479
09:15 - 09:29	463
09:30 - 09:44	455
09:45 - 09:59	387
10:00 - 10:14	402
10:15 - 10:29	364
10:30 - 10:44	379
10:45 - 10:59	401
11:00 - 11:14	360
11:15 - 11:29	378
11:30 - 11:44	402
11:45 - 11:59	334
12:00 - 12:14	366
12:15 - 12:29	417
12:30 - 12:44	368
12:45 - 12:59	387

Daily Vehicle Volume Report

Study Date: Thursday, 09/20/2018
Unit ID: 0149
Location: SW 24TH ST / W OF SW 69TH AV

	Eastbound Volume
13:00 - 13:14	375
13:15 - 13:29	323
13:30 - 13:44	347
13:45 - 13:59	345
14:00 - 14:14	360
14:15 - 14:29	369
14:30 - 14:44	427
14:45 - 14:59	324
15:00 - 15:14	336
15:15 - 15:29	370
15:30 - 15:44	342
15:45 - 15:59	366
16:00 - 16:14	386
16:15 - 16:29	304
16:30 - 16:44	350
16:45 - 16:59	325
17:00 - 17:14	318
17:15 - 17:29	326
17:30 - 17:44	335
17:45 - 17:59	363
18:00 - 18:14	330
18:15 - 18:29	335
18:30 - 18:44	311
18:45 - 18:59	312
19:00 - 19:14	331
19:15 - 19:29	314
19:30 - 19:44	332
19:45 - 19:59	276
20:00 - 20:14	278
20:15 - 20:29	260
20:30 - 20:44	244
20:45 - 20:59	234
21:00 - 21:14	230
21:15 - 21:29	203
21:30 - 21:44	190
21:45 - 21:59	181
22:00 - 22:14	159
22:15 - 22:29	150
22:30 - 22:44	131
22:45 - 22:59	126
23:00 - 23:14	106
23:15 - 23:29	82
23:30 - 23:44	77
23:45 - 23:59	69
Totals	**24273**
AM Peak Time	**08:32 - 09:31**
AM Peak Volume	**1876**
PM Peak Time	**12:12 - 13:11**
PM Peak Volume	**1567**

Daily Vehicle Volume Report

Study Date: Tuesday, 09/18/2018
Unit ID: 0172
Location: SW 24TH ST / W OF SW 69TH AV

	Westbound Volume
00:00 - 00:14	51
00:15 - 00:29	54
00:30 - 00:44	33
00:45 - 00:59	30
01:00 - 01:14	23
01:15 - 01:29	25
01:30 - 01:44	20
01:45 - 01:59	12
02:00 - 02:14	18
02:15 - 02:29	11
02:30 - 02:44	10
02:45 - 02:59	7
03:00 - 03:14	11
03:15 - 03:29	7
03:30 - 03:44	16
03:45 - 03:59	12
04:00 - 04:14	28
04:15 - 04:29	25
04:30 - 04:44	22
04:45 - 04:59	46
05:00 - 05:14	63
05:15 - 05:29	45
05:30 - 05:44	79
05:45 - 05:59	83
06:00 - 06:14	109
06:15 - 06:29	142
06:30 - 06:44	196
06:45 - 06:59	198
07:00 - 07:14	239
07:15 - 07:29	247
07:30 - 07:44	236
07:45 - 07:59	247
08:00 - 08:14	270
08:15 - 08:29	298
08:30 - 08:44	285
08:45 - 08:59	301
09:00 - 09:14	273
09:15 - 09:29	258
09:30 - 09:44	265
09:45 - 09:59	296
10:00 - 10:14	283
10:15 - 10:29	285
10:30 - 10:44	309
10:45 - 10:59	289
11:00 - 11:14	315
11:15 - 11:29	316
11:30 - 11:44	320
11:45 - 11:59	290
12:00 - 12:14	279
12:15 - 12:29	351
12:30 - 12:44	317
12:45 - 12:59	279

Daily Vehicle Volume Report

Study Date: Tuesday, 09/18/2018
Unit ID: 0172
Location: SW 24TH ST / W OF SW 69TH AV

	Westbound Volume
13:00 - 13:14	310
13:15 - 13:29	319
13:30 - 13:44	265
13:45 - 13:59	297
14:00 - 14:14	299
14:15 - 14:29	311
14:30 - 14:44	359
14:45 - 14:59	306
15:00 - 15:14	316
15:15 - 15:29	343
15:30 - 15:44	301
15:45 - 15:59	265
16:00 - 16:14	320
16:15 - 16:29	321
16:30 - 16:44	318
16:45 - 16:59	311
17:00 - 17:14	309
17:15 - 17:29	310
17:30 - 17:44	314
17:45 - 17:59	284
18:00 - 18:14	289
18:15 - 18:29	347
18:30 - 18:44	360
18:45 - 18:59	346
19:00 - 19:14	338
19:15 - 19:29	325
19:30 - 19:44	335
19:45 - 19:59	308
20:00 - 20:14	269
20:15 - 20:29	269
20:30 - 20:44	252
20:45 - 20:59	205
21:00 - 21:14	207
21:15 - 21:29	187
21:30 - 21:44	173
21:45 - 21:59	155
22:00 - 22:14	163
22:15 - 22:29	136
22:30 - 22:44	106
22:45 - 22:59	98
23:00 - 23:14	95
23:15 - 23:29	86
23:30 - 23:44	88
23:45 - 23:59	71
Totals	**19610**
AM Peak Time	**10:51 - 11:50**
AM Peak Volume	**1281**
PM Peak Time	**18:19 - 19:18**
PM Peak Volume	**1404**

Daily Vehicle Volume Report

Study Date: Wednesday, 09/19/2018
Unit ID: 0172
Location: SW 24TH ST / W OF SW 69TH AV

	Westbound Volume
00:00 - 00:14	57
00:15 - 00:29	45
00:30 - 00:44	37
00:45 - 00:59	30
01:00 - 01:14	26
01:15 - 01:29	27
01:30 - 01:44	28
01:45 - 01:59	17
02:00 - 02:14	15
02:15 - 02:29	22
02:30 - 02:44	13
02:45 - 02:59	14
03:00 - 03:14	12
03:15 - 03:29	15
03:30 - 03:44	10
03:45 - 03:59	18
04:00 - 04:14	18
04:15 - 04:29	16
04:30 - 04:44	35
04:45 - 04:59	38
05:00 - 05:14	36
05:15 - 05:29	53
05:30 - 05:44	76
05:45 - 05:59	96
06:00 - 06:14	97
06:15 - 06:29	112
06:30 - 06:44	144
06:45 - 06:59	180
07:00 - 07:14	199
07:15 - 07:29	239
07:30 - 07:44	246
07:45 - 07:59	204
08:00 - 08:14	288
08:15 - 08:29	245
08:30 - 08:44	277
08:45 - 08:59	285
09:00 - 09:14	245
09:15 - 09:29	291
09:30 - 09:44	306
09:45 - 09:59	308
10:00 - 10:14	290
10:15 - 10:29	289
10:30 - 10:44	278
10:45 - 10:59	317
11:00 - 11:14	299
11:15 - 11:29	298
11:30 - 11:44	284
11:45 - 11:59	315
12:00 - 12:14	309
12:15 - 12:29	338
12:30 - 12:44	325
12:45 - 12:59	309

Daily Vehicle Volume Report

Study Date: Wednesday, 09/19/2018
Unit ID: 0172
Location: SW 24TH ST / W OF SW 69TH AV

	Westbound Volume
13:00 - 13:14	314
13:15 - 13:29	330
13:30 - 13:44	295
13:45 - 13:59	303
14:00 - 14:14	319
14:15 - 14:29	310
14:30 - 14:44	313
14:45 - 14:59	293
15:00 - 15:14	329
15:15 - 15:29	383
15:30 - 15:44	333
15:45 - 15:59	333
16:00 - 16:14	303
16:15 - 16:29	396
16:30 - 16:44	370
16:45 - 16:59	393
17:00 - 17:14	381
17:15 - 17:29	383
17:30 - 17:44	384
17:45 - 17:59	388
18:00 - 18:14	331
18:15 - 18:29	423
18:30 - 18:44	401
18:45 - 18:59	382
19:00 - 19:14	314
19:15 - 19:29	346
19:30 - 19:44	334
19:45 - 19:59	328
20:00 - 20:14	301
20:15 - 20:29	294
20:30 - 20:44	240
20:45 - 20:59	219
21:00 - 21:14	189
21:15 - 21:29	227
21:30 - 21:44	182
21:45 - 21:59	177
22:00 - 22:14	162
22:15 - 22:29	122
22:30 - 22:44	130
22:45 - 22:59	88
23:00 - 23:14	107
23:15 - 23:29	102
23:30 - 23:44	79
23:45 - 23:59	64
Totals	**20466**
AM Peak Time	**09:26 - 10:25**
AM Peak Volume	**1208**
PM Peak Time	**16:42 - 17:41**
PM Peak Volume	**1553**

Daily Vehicle Volume Report

Study Date: Thursday, 09/20/2018
Unit ID: 0172
Location: SW 24TH ST / W OF SW 69TH AV

	Westbound Volume
00:00 - 00:14	62
00:15 - 00:29	47
00:30 - 00:44	44
00:45 - 00:59	37
01:00 - 01:14	31
01:15 - 01:29	23
01:30 - 01:44	32
01:45 - 01:59	20
02:00 - 02:14	15
02:15 - 02:29	18
02:30 - 02:44	15
02:45 - 02:59	16
03:00 - 03:14	6
03:15 - 03:29	11
03:30 - 03:44	16
03:45 - 03:59	13
04:00 - 04:14	20
04:15 - 04:29	17
04:30 - 04:44	26
04:45 - 04:59	39
05:00 - 05:14	47
05:15 - 05:29	70
05:30 - 05:44	84
05:45 - 05:59	82
06:00 - 06:14	102
06:15 - 06:29	130
06:30 - 06:44	180
06:45 - 06:59	185
07:00 - 07:14	214
07:15 - 07:29	235
07:30 - 07:44	245
07:45 - 07:59	231
08:00 - 08:14	288
08:15 - 08:29	282
08:30 - 08:44	296
08:45 - 08:59	305
09:00 - 09:14	267
09:15 - 09:29	283
09:30 - 09:44	257
09:45 - 09:59	261
10:00 - 10:14	271
10:15 - 10:29	272
10:30 - 10:44	285
10:45 - 10:59	306
11:00 - 11:14	252
11:15 - 11:29	290
11:30 - 11:44	302
11:45 - 11:59	293
12:00 - 12:14	303
12:15 - 12:29	308
12:30 - 12:44	269
12:45 - 12:59	301

Daily Vehicle Volume Report

Study Date: Thursday, 09/20/2018
Unit ID: 0172
Location: SW 24TH ST / W OF SW 69TH AV

	Westbound Volume
13:00 - 13:14	324
13:15 - 13:29	297
13:30 - 13:44	292
13:45 - 13:59	299
14:00 - 14:14	301
14:15 - 14:29	280
14:30 - 14:44	231
14:45 - 14:59	216
15:00 - 15:14	308
15:15 - 15:29	287
15:30 - 15:44	327
15:45 - 15:59	310
16:00 - 16:14	295
16:15 - 16:29	314
16:30 - 16:44	364
16:45 - 16:59	341
17:00 - 17:14	348
17:15 - 17:29	322
17:30 - 17:44	339
17:45 - 17:59	385
18:00 - 18:14	332
18:15 - 18:29	340
18:30 - 18:44	358
18:45 - 18:59	356
19:00 - 19:14	340
19:15 - 19:29	342
19:30 - 19:44	317
19:45 - 19:59	279
20:00 - 20:14	282
20:15 - 20:29	274
20:30 - 20:44	279
20:45 - 20:59	240
21:00 - 21:14	234
21:15 - 21:29	192
21:30 - 21:44	179
21:45 - 21:59	158
22:00 - 22:14	165
22:15 - 22:29	141
22:30 - 22:44	145
22:45 - 22:59	111
23:00 - 23:14	116
23:15 - 23:29	123
23:30 - 23:44	92
23:45 - 23:59	101
Totals	**19680**
AM Peak Time	**08:07 - 09:06**
AM Peak Volume	**1202**
PM Peak Time	**17:48 - 18:47**
PM Peak Volume	**1430**

Daily Vehicle Volume Report

Study Date: Tuesday, 09/18/2018
Unit ID: 0148
Location: SW 22ND ST / W OF SW 69TH AV

	Eastbound Volume
00:00 - 00:14	1
00:15 - 00:29	0
00:30 - 00:44	3
00:45 - 00:59	1
01:00 - 01:14	1
01:15 - 01:29	0
01:30 - 01:44	0
01:45 - 01:59	2
02:00 - 02:14	3
02:15 - 02:29	0
02:30 - 02:44	0
02:45 - 02:59	1
03:00 - 03:14	0
03:15 - 03:29	0
03:30 - 03:44	1
03:45 - 03:59	3
04:00 - 04:14	1
04:15 - 04:29	1
04:30 - 04:44	1
04:45 - 04:59	1
05:00 - 05:14	3
05:15 - 05:29	0
05:30 - 05:44	4
05:45 - 05:59	4
06:00 - 06:14	9
06:15 - 06:29	6
06:30 - 06:44	5
06:45 - 06:59	13
07:00 - 07:14	16
07:15 - 07:29	17
07:30 - 07:44	21
07:45 - 07:59	28
08:00 - 08:14	49
08:15 - 08:29	59
08:30 - 08:44	34
08:45 - 08:59	24
09:00 - 09:14	12
09:15 - 09:29	11
09:30 - 09:44	14
09:45 - 09:59	8
10:00 - 10:14	8
10:15 - 10:29	12
10:30 - 10:44	16
10:45 - 10:59	13
11:00 - 11:14	13
11:15 - 11:29	14
11:30 - 11:44	23
11:45 - 11:59	13
12:00 - 12:14	11
12:15 - 12:29	19
12:30 - 12:44	21
12:45 - 12:59	17

Daily Vehicle Volume Report

Study Date: Tuesday, 09/18/2018
Unit ID: 0148
Location: SW 22ND ST / W OF SW 69TH AV

	Eastbound Volume
13:00 - 13:14	29
13:15 - 13:29	17
13:30 - 13:44	33
13:45 - 13:59	37
14:00 - 14:14	30
14:15 - 14:29	24
14:30 - 14:44	31
14:45 - 14:59	37
15:00 - 15:14	49
15:15 - 15:29	44
15:30 - 15:44	61
15:45 - 15:59	45
16:00 - 16:14	34
16:15 - 16:29	57
16:30 - 16:44	48
16:45 - 16:59	71
17:00 - 17:14	66
17:15 - 17:29	69
17:30 - 17:44	64
17:45 - 17:59	60
18:00 - 18:14	53
18:15 - 18:29	42
18:30 - 18:44	46
18:45 - 18:59	31
19:00 - 19:14	32
19:15 - 19:29	31
19:30 - 19:44	25
19:45 - 19:59	25
20:00 - 20:14	24
20:15 - 20:29	14
20:30 - 20:44	12
20:45 - 20:59	6
21:00 - 21:14	12
21:15 - 21:29	10
21:30 - 21:44	10
21:45 - 21:59	9
22:00 - 22:14	13
22:15 - 22:29	6
22:30 - 22:44	6
22:45 - 22:59	8
23:00 - 23:14	6
23:15 - 23:29	6
23:30 - 23:44	2
23:45 - 23:59	1
Totals	**1873**
AM Peak Time	**07:41 - 08:40**
AM Peak Volume	**171**
PM Peak Time	**16:48 - 17:47**
PM Peak Volume	**277**

Daily Vehicle Volume Report

Study Date: Wednesday, 09/19/2018
Unit ID: 0148
Location: SW 22ND ST / W OF SW 69TH AV

	Eastbound Volume
00:00 - 00:14	2
00:15 - 00:29	4
00:30 - 00:44	1
00:45 - 00:59	1
01:00 - 01:14	0
01:15 - 01:29	2
01:30 - 01:44	1
01:45 - 01:59	1
02:00 - 02:14	0
02:15 - 02:29	1
02:30 - 02:44	0
02:45 - 02:59	0
03:00 - 03:14	1
03:15 - 03:29	1
03:30 - 03:44	0
03:45 - 03:59	3
04:00 - 04:14	2
04:15 - 04:29	0
04:30 - 04:44	1
04:45 - 04:59	1
05:00 - 05:14	0
05:15 - 05:29	2
05:30 - 05:44	3
05:45 - 05:59	5
06:00 - 06:14	4
06:15 - 06:29	5
06:30 - 06:44	5
06:45 - 06:59	9
07:00 - 07:14	11
07:15 - 07:29	19
07:30 - 07:44	16
07:45 - 07:59	10
08:00 - 08:14	16
08:15 - 08:29	19
08:30 - 08:44	19
08:45 - 08:59	16
09:00 - 09:14	8
09:15 - 09:29	17
09:30 - 09:44	14
09:45 - 09:59	18
10:00 - 10:14	17
10:15 - 10:29	19
10:30 - 10:44	12
10:45 - 10:59	5
11:00 - 11:14	20
11:15 - 11:29	25
11:30 - 11:44	18
11:45 - 11:59	20
12:00 - 12:14	18
12:15 - 12:29	17
12:30 - 12:44	17
12:45 - 12:59	15

Daily Vehicle Volume Report

Study Date: Wednesday, 09/19/2018
Unit ID: 0148
Location: SW 22ND ST / W OF SW 69TH AV

	Eastbound Volume
13:00 - 13:14	23
13:15 - 13:29	14
13:30 - 13:44	23
13:45 - 13:59	26
14:00 - 14:14	22
14:15 - 14:29	18
14:30 - 14:44	18
14:45 - 14:59	30
15:00 - 15:14	23
15:15 - 15:29	28
15:30 - 15:44	27
15:45 - 15:59	36
16:00 - 16:14	30
16:15 - 16:29	47
16:30 - 16:44	31
16:45 - 16:59	35
17:00 - 17:14	38
17:15 - 17:29	43
17:30 - 17:44	45
17:45 - 17:59	56
18:00 - 18:14	42
18:15 - 18:29	33
18:30 - 18:44	39
18:45 - 18:59	30
19:00 - 19:14	19
19:15 - 19:29	29
19:30 - 19:44	26
19:45 - 19:59	18
20:00 - 20:14	16
20:15 - 20:29	15
20:30 - 20:44	17
20:45 - 20:59	10
21:00 - 21:14	11
21:15 - 21:29	10
21:30 - 21:44	8
21:45 - 21:59	13
22:00 - 22:14	8
22:15 - 22:29	6
22:30 - 22:44	4
22:45 - 22:59	6
23:00 - 23:14	6
23:15 - 23:29	3
23:30 - 23:44	2
23:45 - 23:59	4
Totals	**1429**
AM Peak Time	**11:00 - 11:59**
AM Peak Volume	**83**
PM Peak Time	**17:12 - 18:11**
PM Peak Volume	**187**

Daily Vehicle Volume Report

Study Date: Thursday, 09/20/2018
Unit ID: 0148
Location: SW 22ND ST / W OF SW 69TH AV

	Eastbound Volume
00:00 - 00:14	2
00:15 - 00:29	1
00:30 - 00:44	1
00:45 - 00:59	1
01:00 - 01:14	2
01:15 - 01:29	0
01:30 - 01:44	1
01:45 - 01:59	3
02:00 - 02:14	1
02:15 - 02:29	0
02:30 - 02:44	1
02:45 - 02:59	2
03:00 - 03:14	0
03:15 - 03:29	2
03:30 - 03:44	1
03:45 - 03:59	0
04:00 - 04:14	0
04:15 - 04:29	2
04:30 - 04:44	1
04:45 - 04:59	1
05:00 - 05:14	2
05:15 - 05:29	1
05:30 - 05:44	4
05:45 - 05:59	5
06:00 - 06:14	9
06:15 - 06:29	3
06:30 - 06:44	4
06:45 - 06:59	12
07:00 - 07:14	21
07:15 - 07:29	22
07:30 - 07:44	21
07:45 - 07:59	28
08:00 - 08:14	33
08:15 - 08:29	55
08:30 - 08:44	25
08:45 - 08:59	29
09:00 - 09:14	14
09:15 - 09:29	9
09:30 - 09:44	10
09:45 - 09:59	9
10:00 - 10:14	13
10:15 - 10:29	17
10:30 - 10:44	9
10:45 - 10:59	16
11:00 - 11:14	11
11:15 - 11:29	19
11:30 - 11:44	9
11:45 - 11:59	17
12:00 - 12:14	21
12:15 - 12:29	18
12:30 - 12:44	10
12:45 - 12:59	19

Daily Vehicle Volume Report

Study Date: Thursday, 09/20/2018
Unit ID: 0148
Location: SW 22ND ST / W OF SW 69TH AV

	Eastbound Volume
13:00 - 13:14	21
13:15 - 13:29	20
13:30 - 13:44	12
13:45 - 13:59	36
14:00 - 14:14	25
14:15 - 14:29	27
14:30 - 14:44	22
14:45 - 14:59	42
15:00 - 15:14	68
15:15 - 15:29	71
15:30 - 15:44	50
15:45 - 15:59	49
16:00 - 16:14	46
16:15 - 16:29	62
16:30 - 16:44	56
16:45 - 16:59	52
17:00 - 17:14	56
17:15 - 17:29	64
17:30 - 17:44	50
17:45 - 17:59	48
18:00 - 18:14	50
18:15 - 18:29	42
18:30 - 18:44	43
18:45 - 18:59	28
19:00 - 19:14	19
19:15 - 19:29	20
19:30 - 19:44	25
19:45 - 19:59	17
20:00 - 20:14	14
20:15 - 20:29	12
20:30 - 20:44	23
20:45 - 20:59	13
21:00 - 21:14	11
21:15 - 21:29	14
21:30 - 21:44	11
21:45 - 21:59	6
22:00 - 22:14	9
22:15 - 22:29	4
22:30 - 22:44	3
22:45 - 22:59	3
23:00 - 23:14	3
23:15 - 23:29	9
23:30 - 23:44	2
23:45 - 23:59	2
Totals	**1777**
AM Peak Time	**07:37 - 08:36**
AM Peak Volume	**145**
PM Peak Time	**14:55 - 15:54**
PM Peak Volume	**248**

Daily Vehicle Volume Report

Study Date: Tuesday, 09/18/2018
Unit ID: 0162
Location: SW 22ND ST / W OF SW 69TH AV

	Westbound Volume
00:00 - 00:14	0
00:15 - 00:29	1
00:30 - 00:44	3
00:45 - 00:59	0
01:00 - 01:14	0
01:15 - 01:29	0
01:30 - 01:44	0
01:45 - 01:59	1
02:00 - 02:14	0
02:15 - 02:29	1
02:30 - 02:44	0
02:45 - 02:59	1
03:00 - 03:14	0
03:15 - 03:29	1
03:30 - 03:44	2
03:45 - 03:59	1
04:00 - 04:14	0
04:15 - 04:29	5
04:30 - 04:44	2
04:45 - 04:59	1
05:00 - 05:14	0
05:15 - 05:29	5
05:30 - 05:44	3
05:45 - 05:59	5
06:00 - 06:14	7
06:15 - 06:29	7
06:30 - 06:44	7
06:45 - 06:59	4
07:00 - 07:14	11
07:15 - 07:29	15
07:30 - 07:44	16
07:45 - 07:59	33
08:00 - 08:14	41
08:15 - 08:29	23
08:30 - 08:44	20
08:45 - 08:59	10
09:00 - 09:14	16
09:15 - 09:29	13
09:30 - 09:44	5
09:45 - 09:59	12
10:00 - 10:14	9
10:15 - 10:29	2
10:30 - 10:44	8
10:45 - 10:59	4
11:00 - 11:14	7
11:15 - 11:29	7
11:30 - 11:44	10
11:45 - 11:59	15
12:00 - 12:14	9
12:15 - 12:29	9
12:30 - 12:44	10
12:45 - 12:59	7

Daily Vehicle Volume Report

Study Date: Tuesday, 09/18/2018
Unit ID: 0162
Location: SW 22ND ST / W OF SW 69TH AV

	Westbound Volume
13:00 - 13:14	5
13:15 - 13:29	15
13:30 - 13:44	6
13:45 - 13:59	16
14:00 - 14:14	9
14:15 - 14:29	9
14:30 - 14:44	15
14:45 - 14:59	17
15:00 - 15:14	12
15:15 - 15:29	10
15:30 - 15:44	8
15:45 - 15:59	19
16:00 - 16:14	21
16:15 - 16:29	11
16:30 - 16:44	5
16:45 - 16:59	12
17:00 - 17:14	7
17:15 - 17:29	14
17:30 - 17:44	12
17:45 - 17:59	7
18:00 - 18:14	9
18:15 - 18:29	11
18:30 - 18:44	4
18:45 - 18:59	8
19:00 - 19:14	10
19:15 - 19:29	3
19:30 - 19:44	6
19:45 - 19:59	13
20:00 - 20:14	12
20:15 - 20:29	8
20:30 - 20:44	8
20:45 - 20:59	5
21:00 - 21:14	5
21:15 - 21:29	5
21:30 - 21:44	6
21:45 - 21:59	3
22:00 - 22:14	2
22:15 - 22:29	3
22:30 - 22:44	1
22:45 - 22:59	2
23:00 - 23:14	1
23:15 - 23:29	2
23:30 - 23:44	0
23:45 - 23:59	0
Totals	**726**
AM Peak Time	**07:45 - 08:44**
AM Peak Volume	**117**
PM Peak Time	**15:35 - 16:34**
PM Peak Volume	**60**

Daily Vehicle Volume Report

Study Date: Wednesday, 09/19/2018
Unit ID: 0162
Location: SW 22ND ST / W OF SW 69TH AV

	Westbound Volume
00:00 - 00:14	0
00:15 - 00:29	1
00:30 - 00:44	1
00:45 - 00:59	2
01:00 - 01:14	0
01:15 - 01:29	2
01:30 - 01:44	1
01:45 - 01:59	1
02:00 - 02:14	0
02:15 - 02:29	0
02:30 - 02:44	0
02:45 - 02:59	0
03:00 - 03:14	0
03:15 - 03:29	0
03:30 - 03:44	1
03:45 - 03:59	0
04:00 - 04:14	2
04:15 - 04:29	1
04:30 - 04:44	1
04:45 - 04:59	1
05:00 - 05:14	0
05:15 - 05:29	2
05:30 - 05:44	4
05:45 - 05:59	4
06:00 - 06:14	5
06:15 - 06:29	5
06:30 - 06:44	4
06:45 - 06:59	3
07:00 - 07:14	10
07:15 - 07:29	17
07:30 - 07:44	15
07:45 - 07:59	12
08:00 - 08:14	17
08:15 - 08:29	9
08:30 - 08:44	14
08:45 - 08:59	12
09:00 - 09:14	12
09:15 - 09:29	11
09:30 - 09:44	12
09:45 - 09:59	8
10:00 - 10:14	16
10:15 - 10:29	11
10:30 - 10:44	14
10:45 - 10:59	7
11:00 - 11:14	11
11:15 - 11:29	8
11:30 - 11:44	5
11:45 - 11:59	15
12:00 - 12:14	11
12:15 - 12:29	9
12:30 - 12:44	14
12:45 - 12:59	9

Daily Vehicle Volume Report

Study Date: Wednesday, 09/19/2018
Unit ID: 0162
Location: SW 22ND ST / W OF SW 69TH AV

	Westbound Volume
13:00 - 13:14	14
13:15 - 13:29	21
13:30 - 13:44	10
13:45 - 13:59	7
14:00 - 14:14	14
14:15 - 14:29	10
14:30 - 14:44	9
14:45 - 14:59	12
15:00 - 15:14	7
15:15 - 15:29	13
15:30 - 15:44	16
15:45 - 15:59	11
16:00 - 16:14	15
16:15 - 16:29	14
16:30 - 16:44	14
16:45 - 16:59	7
17:00 - 17:14	10
17:15 - 17:29	9
17:30 - 17:44	8
17:45 - 17:59	14
18:00 - 18:14	6
18:15 - 18:29	8
18:30 - 18:44	6
18:45 - 18:59	10
19:00 - 19:14	12
19:15 - 19:29	12
19:30 - 19:44	9
19:45 - 19:59	5
20:00 - 20:14	7
20:15 - 20:29	13
20:30 - 20:44	7
20:45 - 20:59	2
21:00 - 21:14	9
21:15 - 21:29	7
21:30 - 21:44	5
21:45 - 21:59	3
22:00 - 22:14	3
22:15 - 22:29	7
22:30 - 22:44	7
22:45 - 22:59	2
23:00 - 23:14	4
23:15 - 23:29	0
23:30 - 23:44	2
23:45 - 23:59	2
Totals	**703**
AM Peak Time	**07:10 - 08:09**
AM Peak Volume	**66**
PM Peak Time	**12:33 - 13:32**
PM Peak Volume	**59**

Daily Vehicle Volume Report

Study Date: Thursday, 09/20/2018
Unit ID: 0162
Location: SW 22ND ST / W OF SW 69TH AV

	Westbound Volume
00:00 - 00:14	2
00:15 - 00:29	0
00:30 - 00:44	1
00:45 - 00:59	1
01:00 - 01:14	3
01:15 - 01:29	1
01:30 - 01:44	1
01:45 - 01:59	0
02:00 - 02:14	1
02:15 - 02:29	0
02:30 - 02:44	0
02:45 - 02:59	0
03:00 - 03:14	0
03:15 - 03:29	0
03:30 - 03:44	0
03:45 - 03:59	0
04:00 - 04:14	1
04:15 - 04:29	1
04:30 - 04:44	1
04:45 - 04:59	1
05:00 - 05:14	1
05:15 - 05:29	0
05:30 - 05:44	9
05:45 - 05:59	6
06:00 - 06:14	6
06:15 - 06:29	5
06:30 - 06:44	10
06:45 - 06:59	7
07:00 - 07:14	13
07:15 - 07:29	20
07:30 - 07:44	20
07:45 - 07:59	44
08:00 - 08:14	57
08:15 - 08:29	22
08:30 - 08:44	25
08:45 - 08:59	17
09:00 - 09:14	24
09:15 - 09:29	22
09:30 - 09:44	10
09:45 - 09:59	18
10:00 - 10:14	8
10:15 - 10:29	17
10:30 - 10:44	5
10:45 - 10:59	8
11:00 - 11:14	7
11:15 - 11:29	9
11:30 - 11:44	6
11:45 - 11:59	5
12:00 - 12:14	7
12:15 - 12:29	12
12:30 - 12:44	4
12:45 - 12:59	7

Daily Vehicle Volume Report

Study Date: Thursday, 09/20/2018
Unit ID: 0162
Location: SW 22ND ST / W OF SW 69TH AV

	Westbound Volume
13:00 - 13:14	6
13:15 - 13:29	4
13:30 - 13:44	14
13:45 - 13:59	9
14:00 - 14:14	13
14:15 - 14:29	7
14:30 - 14:44	18
14:45 - 14:59	22
15:00 - 15:14	16
15:15 - 15:29	14
15:30 - 15:44	15
15:45 - 15:59	25
16:00 - 16:14	21
16:15 - 16:29	14
16:30 - 16:44	13
16:45 - 16:59	14
17:00 - 17:14	11
17:15 - 17:29	15
17:30 - 17:44	21
17:45 - 17:59	12
18:00 - 18:14	8
18:15 - 18:29	13
18:30 - 18:44	9
18:45 - 18:59	16
19:00 - 19:14	13
19:15 - 19:29	15
19:30 - 19:44	14
19:45 - 19:59	10
20:00 - 20:14	11
20:15 - 20:29	7
20:30 - 20:44	8
20:45 - 20:59	16
21:00 - 21:14	10
21:15 - 21:29	8
21:30 - 21:44	8
21:45 - 21:59	7
22:00 - 22:14	7
22:15 - 22:29	6
22:30 - 22:44	3
22:45 - 22:59	4
23:00 - 23:14	3
23:15 - 23:29	1
23:30 - 23:44	2
23:45 - 23:59	1
Totals	**929**
AM Peak Time	**07:40 - 08:39**
AM Peak Volume	**152**
PM Peak Time	**15:19 - 16:18**
PM Peak Volume	**78**

Daily Vehicle Volume Report

Study Date: Tuesday, 09/18/2018
Unit ID: 0168
Location: SW 21ST ST / E OF SW 70TH AV

	Eastbound Volume
00:00 - 00:14	1
00:15 - 00:29	1
00:30 - 00:44	1
00:45 - 00:59	3
01:00 - 01:14	1
01:15 - 01:29	1
01:30 - 01:44	1
01:45 - 01:59	0
02:00 - 02:14	0
02:15 - 02:29	0
02:30 - 02:44	0
02:45 - 02:59	1
03:00 - 03:14	0
03:15 - 03:29	1
03:30 - 03:44	1
03:45 - 03:59	1
04:00 - 04:14	2
04:15 - 04:29	1
04:30 - 04:44	1
04:45 - 04:59	1
05:00 - 05:14	2
05:15 - 05:29	4
05:30 - 05:44	7
05:45 - 05:59	3
06:00 - 06:14	5
06:15 - 06:29	7
06:30 - 06:44	11
06:45 - 06:59	19
07:00 - 07:14	25
07:15 - 07:29	24
07:30 - 07:44	35
07:45 - 07:59	39
08:00 - 08:14	38
08:15 - 08:29	42
08:30 - 08:44	44
08:45 - 08:59	59
09:00 - 09:14	32
09:15 - 09:29	30
09:30 - 09:44	15
09:45 - 09:59	15
10:00 - 10:14	7
10:15 - 10:29	20
10:30 - 10:44	12
10:45 - 10:59	17
11:00 - 11:14	12
11:15 - 11:29	17
11:30 - 11:44	20
11:45 - 11:59	8
12:00 - 12:14	15
12:15 - 12:29	16
12:30 - 12:44	15
12:45 - 12:59	18

Daily Vehicle Volume Report

Study Date: Tuesday, 09/18/2018
Unit ID: 0168
Location: SW 21ST ST / E OF SW 70TH AV

	Eastbound Volume
13:00 - 13:14	8
13:15 - 13:29	27
13:30 - 13:44	17
13:45 - 13:59	13
14:00 - 14:14	10
14:15 - 14:29	13
14:30 - 14:44	26
14:45 - 14:59	16
15:00 - 15:14	15
15:15 - 15:29	25
15:30 - 15:44	20
15:45 - 15:59	20
16:00 - 16:14	17
16:15 - 16:29	14
16:30 - 16:44	26
16:45 - 16:59	18
17:00 - 17:14	10
17:15 - 17:29	12
17:30 - 17:44	21
17:45 - 17:59	13
18:00 - 18:14	27
18:15 - 18:29	11
18:30 - 18:44	20
18:45 - 18:59	9
19:00 - 19:14	18
19:15 - 19:29	19
19:30 - 19:44	12
19:45 - 19:59	16
20:00 - 20:14	17
20:15 - 20:29	22
20:30 - 20:44	14
20:45 - 20:59	11
21:00 - 21:14	9
21:15 - 21:29	3
21:30 - 21:44	7
21:45 - 21:59	9
22:00 - 22:14	8
22:15 - 22:29	10
22:30 - 22:44	4
22:45 - 22:59	5
23:00 - 23:14	3
23:15 - 23:29	4
23:30 - 23:44	1
23:45 - 23:59	2
Totals	**1253**
AM Peak Time	**08:08 - 09:07**
AM Peak Volume	**188**
PM Peak Time	**14:30 - 15:29**
PM Peak Volume	**82**

Daily Vehicle Volume Report

Study Date: Wednesday, 09/19/2018
Unit ID: 0168
Location: SW 21ST ST / E OF SW 70TH AV

	Eastbound Volume
00:00 - 00:14	0
00:15 - 00:29	2
00:30 - 00:44	2
00:45 - 00:59	0
01:00 - 01:14	0
01:15 - 01:29	1
01:30 - 01:44	0
01:45 - 01:59	0
02:00 - 02:14	0
02:15 - 02:29	2
02:30 - 02:44	2
02:45 - 02:59	0
03:00 - 03:14	0
03:15 - 03:29	0
03:30 - 03:44	1
03:45 - 03:59	0
04:00 - 04:14	3
04:15 - 04:29	0
04:30 - 04:44	0
04:45 - 04:59	1
05:00 - 05:14	2
05:15 - 05:29	1
05:30 - 05:44	2
05:45 - 05:59	4
06:00 - 06:14	8
06:15 - 06:29	4
06:30 - 06:44	15
06:45 - 06:59	16
07:00 - 07:14	17
07:15 - 07:29	22
07:30 - 07:44	34
07:45 - 07:59	24
08:00 - 08:14	42
08:15 - 08:29	35
08:30 - 08:44	39
08:45 - 08:59	36
09:00 - 09:14	25
09:15 - 09:29	16
09:30 - 09:44	20
09:45 - 09:59	10
10:00 - 10:14	12
10:15 - 10:29	15
10:30 - 10:44	10
10:45 - 10:59	16
11:00 - 11:14	14
11:15 - 11:29	16
11:30 - 11:44	15
11:45 - 11:59	16
12:00 - 12:14	14
12:15 - 12:29	16
12:30 - 12:44	11
12:45 - 12:59	14

Daily Vehicle Volume Report

Study Date: Wednesday, 09/19/2018
Unit ID: 0168
Location: SW 21ST ST / E OF SW 70TH AV

	Eastbound Volume
13:00 - 13:14	14
13:15 - 13:29	15
13:30 - 13:44	12
13:45 - 13:59	12
14:00 - 14:14	21
14:15 - 14:29	16
14:30 - 14:44	19
14:45 - 14:59	17
15:00 - 15:14	11
15:15 - 15:29	6
15:30 - 15:44	17
15:45 - 15:59	21
16:00 - 16:14	18
16:15 - 16:29	18
16:30 - 16:44	16
16:45 - 16:59	15
17:00 - 17:14	19
17:15 - 17:29	11
17:30 - 17:44	11
17:45 - 17:59	23
18:00 - 18:14	16
18:15 - 18:29	11
18:30 - 18:44	21
18:45 - 18:59	14
19:00 - 19:14	15
19:15 - 19:29	12
19:30 - 19:44	16
19:45 - 19:59	12
20:00 - 20:14	14
20:15 - 20:29	11
20:30 - 20:44	4
20:45 - 20:59	10
21:00 - 21:14	6
21:15 - 21:29	4
21:30 - 21:44	3
21:45 - 21:59	9
22:00 - 22:14	11
22:15 - 22:29	7
22:30 - 22:44	6
22:45 - 22:59	2
23:00 - 23:14	3
23:15 - 23:29	5
23:30 - 23:44	1
23:45 - 23:59	5
Totals	**1085**
AM Peak Time	**08:00 - 08:59**
AM Peak Volume	**152**
PM Peak Time	**14:02 - 15:01**
PM Peak Volume	**75**

Daily Vehicle Volume Report

Study Date: Thursday, 09/20/2018
Unit ID: 0168
Location: SW 21ST ST / E OF SW 70TH AV

	Eastbound Volume
00:00 - 00:14	4
00:15 - 00:29	2
00:30 - 00:44	0
00:45 - 00:59	0
01:00 - 01:14	1
01:15 - 01:29	1
01:30 - 01:44	1
01:45 - 01:59	2
02:00 - 02:14	1
02:15 - 02:29	4
02:30 - 02:44	1
02:45 - 02:59	0
03:00 - 03:14	0
03:15 - 03:29	1
03:30 - 03:44	0
03:45 - 03:59	0
04:00 - 04:14	2
04:15 - 04:29	1
04:30 - 04:44	0
04:45 - 04:59	1
05:00 - 05:14	1
05:15 - 05:29	2
05:30 - 05:44	6
05:45 - 05:59	4
06:00 - 06:14	9
06:15 - 06:29	9
06:30 - 06:44	5
06:45 - 06:59	17
07:00 - 07:14	21
07:15 - 07:29	25
07:30 - 07:44	40
07:45 - 07:59	48
08:00 - 08:14	39
08:15 - 08:29	34
08:30 - 08:44	45
08:45 - 08:59	40
09:00 - 09:14	29
09:15 - 09:29	21
09:30 - 09:44	20
09:45 - 09:59	14
10:00 - 10:14	19
10:15 - 10:29	16
10:30 - 10:44	16
10:45 - 10:59	8
11:00 - 11:14	6
11:15 - 11:29	11
11:30 - 11:44	14
11:45 - 11:59	19
12:00 - 12:14	18
12:15 - 12:29	17
12:30 - 12:44	19
12:45 - 12:59	13

Daily Vehicle Volume Report

Study Date: Thursday, 09/20/2018
Unit ID: 0168
Location: SW 21ST ST / E OF SW 70TH AV

	Eastbound Volume
13:00 - 13:14	11
13:15 - 13:29	9
13:30 - 13:44	10
13:45 - 13:59	8
14:00 - 14:14	15
14:15 - 14:29	25
14:30 - 14:44	7
14:45 - 14:59	11
15:00 - 15:14	17
15:15 - 15:29	24
15:30 - 15:44	5
15:45 - 15:59	11
16:00 - 16:14	18
16:15 - 16:29	25
16:30 - 16:44	18
16:45 - 16:59	15
17:00 - 17:14	19
17:15 - 17:29	13
17:30 - 17:44	16
17:45 - 17:59	26
18:00 - 18:14	18
18:15 - 18:29	12
18:30 - 18:44	10
18:45 - 18:59	20
19:00 - 19:14	20
19:15 - 19:29	8
19:30 - 19:44	12
19:45 - 19:59	13
20:00 - 20:14	12
20:15 - 20:29	7
20:30 - 20:44	12
20:45 - 20:59	19
21:00 - 21:14	7
21:15 - 21:29	9
21:30 - 21:44	5
21:45 - 21:59	7
22:00 - 22:14	5
22:15 - 22:29	8
22:30 - 22:44	5
22:45 - 22:59	3
23:00 - 23:14	3
23:15 - 23:29	4
23:30 - 23:44	4
23:45 - 23:59	1
Totals	**1154**
AM Peak Time	**07:46 - 08:45**
AM Peak Volume	**170**
PM Peak Time	**16:11 - 17:10**
PM Peak Volume	**81**

Daily Vehicle Volume Report

Study Date: Tuesday, 09/18/2018
Unit ID: 0170
Location: SW 21ST ST / E OF SW 70TH AV

	Westbound Volume
00:00 - 00:14	1
00:15 - 00:29	4
00:30 - 00:44	2
00:45 - 00:59	1
01:00 - 01:14	0
01:15 - 01:29	1
01:30 - 01:44	0
01:45 - 01:59	0
02:00 - 02:14	0
02:15 - 02:29	2
02:30 - 02:44	0
02:45 - 02:59	0
03:00 - 03:14	0
03:15 - 03:29	1
03:30 - 03:44	0
03:45 - 03:59	1
04:00 - 04:14	1
04:15 - 04:29	1
04:30 - 04:44	1
04:45 - 04:59	0
05:00 - 05:14	2
05:15 - 05:29	3
05:30 - 05:44	2
05:45 - 05:59	4
06:00 - 06:14	7
06:15 - 06:29	8
06:30 - 06:44	15
06:45 - 06:59	13
07:00 - 07:14	8
07:15 - 07:29	12
07:30 - 07:44	11
07:45 - 07:59	15
08:00 - 08:14	19
08:15 - 08:29	23
08:30 - 08:44	19
08:45 - 08:59	19
09:00 - 09:14	12
09:15 - 09:29	11
09:30 - 09:44	15
09:45 - 09:59	14
10:00 - 10:14	15
10:15 - 10:29	10
10:30 - 10:44	6
10:45 - 10:59	10
11:00 - 11:14	10
11:15 - 11:29	7
11:30 - 11:44	10
11:45 - 11:59	11
12:00 - 12:14	13
12:15 - 12:29	7
12:30 - 12:44	9
12:45 - 12:59	20

Daily Vehicle Volume Report

Study Date: Tuesday, 09/18/2018
Unit ID: 0170
Location: SW 21ST ST / E OF SW 70TH AV

	Westbound Volume
13:00 - 13:14	15
13:15 - 13:29	19
13:30 - 13:44	12
13:45 - 13:59	15
14:00 - 14:14	24
14:15 - 14:29	14
14:30 - 14:44	19
14:45 - 14:59	29
15:00 - 15:14	19
15:15 - 15:29	25
15:30 - 15:44	35
15:45 - 15:59	32
16:00 - 16:14	28
16:15 - 16:29	35
16:30 - 16:44	45
16:45 - 16:59	50
17:00 - 17:14	76
17:15 - 17:29	67
17:30 - 17:44	49
17:45 - 17:59	73
18:00 - 18:14	58
18:15 - 18:29	66
18:30 - 18:44	48
18:45 - 18:59	35
19:00 - 19:14	17
19:15 - 19:29	6
19:30 - 19:44	20
19:45 - 19:59	10
20:00 - 20:14	6
20:15 - 20:29	12
20:30 - 20:44	8
20:45 - 20:59	13
21:00 - 21:14	12
21:15 - 21:29	8
21:30 - 21:44	6
21:45 - 21:59	13
22:00 - 22:14	4
22:15 - 22:29	6
22:30 - 22:44	1
22:45 - 22:59	2
23:00 - 23:14	1
23:15 - 23:29	7
23:30 - 23:44	4
23:45 - 23:59	3
Totals	**1423**
AM Peak Time	**07:57 - 08:56**
AM Peak Volume	**82**
PM Peak Time	**17:02 - 18:01**
PM Peak Volume	**267**

Daily Vehicle Volume Report

Study Date: Wednesday, 09/19/2018
Unit ID: 0170
Location: SW 21ST ST / E OF SW 70TH AV

	Westbound Volume
00:00 - 00:14	3
00:15 - 00:29	1
00:30 - 00:44	1
00:45 - 00:59	1
01:00 - 01:14	1
01:15 - 01:29	0
01:30 - 01:44	2
01:45 - 01:59	0
02:00 - 02:14	0
02:15 - 02:29	2
02:30 - 02:44	2
02:45 - 02:59	0
03:00 - 03:14	0
03:15 - 03:29	0
03:30 - 03:44	0
03:45 - 03:59	0
04:00 - 04:14	0
04:15 - 04:29	2
04:30 - 04:44	1
04:45 - 04:59	1
05:00 - 05:14	2
05:15 - 05:29	1
05:30 - 05:44	0
05:45 - 05:59	4
06:00 - 06:14	2
06:15 - 06:29	6
06:30 - 06:44	6
06:45 - 06:59	5
07:00 - 07:14	9
07:15 - 07:29	10
07:30 - 07:44	15
07:45 - 07:59	9
08:00 - 08:14	20
08:15 - 08:29	15
08:30 - 08:44	16
08:45 - 08:59	16
09:00 - 09:14	9
09:15 - 09:29	10
09:30 - 09:44	15
09:45 - 09:59	15
10:00 - 10:14	7
10:15 - 10:29	10
10:30 - 10:44	9
10:45 - 10:59	8
11:00 - 11:14	15
11:15 - 11:29	12
11:30 - 11:44	12
11:45 - 11:59	13
12:00 - 12:14	12
12:15 - 12:29	16
12:30 - 12:44	21
12:45 - 12:59	30

Daily Vehicle Volume Report

Study Date: Wednesday, 09/19/2018
Unit ID: 0170
Location: SW 21ST ST / E OF SW 70TH AV

	Westbound Volume
13:00 - 13:14	15
13:15 - 13:29	11
13:30 - 13:44	15
13:45 - 13:59	12
14:00 - 14:14	20
14:15 - 14:29	15
14:30 - 14:44	14
14:45 - 14:59	23
15:00 - 15:14	11
15:15 - 15:29	18
15:30 - 15:44	18
15:45 - 15:59	26
16:00 - 16:14	30
16:15 - 16:29	28
16:30 - 16:44	35
16:45 - 16:59	33
17:00 - 17:14	48
17:15 - 17:29	55
17:30 - 17:44	44
17:45 - 17:59	36
18:00 - 18:14	38
18:15 - 18:29	36
18:30 - 18:44	40
18:45 - 18:59	32
19:00 - 19:14	14
19:15 - 19:29	24
19:30 - 19:44	26
19:45 - 19:59	12
20:00 - 20:14	8
20:15 - 20:29	7
20:30 - 20:44	10
20:45 - 20:59	13
21:00 - 21:14	11
21:15 - 21:29	7
21:30 - 21:44	10
21:45 - 21:59	3
22:00 - 22:14	8
22:15 - 22:29	6
22:30 - 22:44	5
22:45 - 22:59	4
23:00 - 23:14	2
23:15 - 23:29	1
23:30 - 23:44	2
23:45 - 23:59	1
Totals	**1194**
AM Peak Time	**08:00 - 08:59**
AM Peak Volume	**67**
PM Peak Time	**16:48 - 17:47**
PM Peak Volume	**186**

Daily Vehicle Volume Report

Study Date: Thursday, 09/20/2018
Unit ID: 0170
Location: SW 21ST ST / E OF SW 70TH AV

	Westbound Volume
00:00 - 00:14	0
00:15 - 00:29	1
00:30 - 00:44	0
00:45 - 00:59	0
01:00 - 01:14	0
01:15 - 01:29	0
01:30 - 01:44	1
01:45 - 01:59	2
02:00 - 02:14	0
02:15 - 02:29	0
02:30 - 02:44	1
02:45 - 02:59	0
03:00 - 03:14	0
03:15 - 03:29	1
03:30 - 03:44	0
03:45 - 03:59	0
04:00 - 04:14	0
04:15 - 04:29	2
04:30 - 04:44	1
04:45 - 04:59	2
05:00 - 05:14	1
05:15 - 05:29	2
05:30 - 05:44	3
05:45 - 05:59	4
06:00 - 06:14	3
06:15 - 06:29	6
06:30 - 06:44	15
06:45 - 06:59	6
07:00 - 07:14	12
07:15 - 07:29	11
07:30 - 07:44	13
07:45 - 07:59	13
08:00 - 08:14	25
08:15 - 08:29	28
08:30 - 08:44	20
08:45 - 08:59	15
09:00 - 09:14	14
09:15 - 09:29	6
09:30 - 09:44	6
09:45 - 09:59	13
10:00 - 10:14	9
10:15 - 10:29	11
10:30 - 10:44	15
10:45 - 10:59	8
11:00 - 11:14	6
11:15 - 11:29	13
11:30 - 11:44	11
11:45 - 11:59	13
12:00 - 12:14	5
12:15 - 12:29	12
12:30 - 12:44	16
12:45 - 12:59	20

Daily Vehicle Volume Report

Study Date: Thursday, 09/20/2018
Unit ID: 0170
Location: SW 21ST ST / E OF SW 70TH AV

	Westbound Volume
13:00 - 13:14	9
13:15 - 13:29	18
13:30 - 13:44	17
13:45 - 13:59	19
14:00 - 14:14	20
14:15 - 14:29	25
14:30 - 14:44	14
14:45 - 14:59	25
15:00 - 15:14	23
15:15 - 15:29	31
15:30 - 15:44	32
15:45 - 15:59	20
16:00 - 16:14	25
16:15 - 16:29	38
16:30 - 16:44	41
16:45 - 16:59	44
17:00 - 17:14	41
17:15 - 17:29	62
17:30 - 17:44	40
17:45 - 17:59	51
18:00 - 18:14	41
18:15 - 18:29	40
18:30 - 18:44	32
18:45 - 18:59	21
19:00 - 19:14	18
19:15 - 19:29	19
19:30 - 19:44	17
19:45 - 19:59	15
20:00 - 20:14	10
20:15 - 20:29	6
20:30 - 20:44	11
20:45 - 20:59	9
21:00 - 21:14	2
21:15 - 21:29	11
21:30 - 21:44	10
21:45 - 21:59	6
22:00 - 22:14	11
22:15 - 22:29	5
22:30 - 22:44	7
22:45 - 22:59	6
23:00 - 23:14	4
23:15 - 23:29	2
23:30 - 23:44	3
23:45 - 23:59	1
Totals	**1268**
AM Peak Time	**08:02 - 09:01**
AM Peak Volume	**89**
PM Peak Time	**17:05 - 18:04**
PM Peak Volume	**203**

Daily Vehicle Volume Report

Study Date: Tuesday, 09/18/2018
Unit ID: 0161
Location: SW 16TH ST / E OF SW 70TH AV

	Eastbound Volume
00:00 - 00:14	2
00:15 - 00:29	3
00:30 - 00:44	2
00:45 - 00:59	5
01:00 - 01:14	4
01:15 - 01:29	3
01:30 - 01:44	0
01:45 - 01:59	1
02:00 - 02:14	1
02:15 - 02:29	1
02:30 - 02:44	0
02:45 - 02:59	0
03:00 - 03:14	1
03:15 - 03:29	2
03:30 - 03:44	0
03:45 - 03:59	1
04:00 - 04:14	1
04:15 - 04:29	3
04:30 - 04:44	3
04:45 - 04:59	2
05:00 - 05:14	1
05:15 - 05:29	13
05:30 - 05:44	16
05:45 - 05:59	9
06:00 - 06:14	19
06:15 - 06:29	36
06:30 - 06:44	43
06:45 - 06:59	51
07:00 - 07:14	75
07:15 - 07:29	86
07:30 - 07:44	76
07:45 - 07:59	114
08:00 - 08:14	93
08:15 - 08:29	121
08:30 - 08:44	112
08:45 - 08:59	133
09:00 - 09:14	80
09:15 - 09:29	76
09:30 - 09:44	78
09:45 - 09:59	67
10:00 - 10:14	61
10:15 - 10:29	43
10:30 - 10:44	44
10:45 - 10:59	37
11:00 - 11:14	46
11:15 - 11:29	38
11:30 - 11:44	43
11:45 - 11:59	54
12:00 - 12:14	41
12:15 - 12:29	36
12:30 - 12:44	45
12:45 - 12:59	52

Daily Vehicle Volume Report

Study Date: Tuesday, 09/18/2018
Unit ID: 0161
Location: SW 16TH ST / E OF SW 70TH AV

	Eastbound Volume
13:00 - 13:14	43
13:15 - 13:29	40
13:30 - 13:44	58
13:45 - 13:59	48
14:00 - 14:14	58
14:15 - 14:29	44
14:30 - 14:44	53
14:45 - 14:59	52
15:00 - 15:14	65
15:15 - 15:29	67
15:30 - 15:44	53
15:45 - 15:59	63
16:00 - 16:14	71
16:15 - 16:29	40
16:30 - 16:44	43
16:45 - 16:59	56
17:00 - 17:14	49
17:15 - 17:29	54
17:30 - 17:44	62
17:45 - 17:59	48
18:00 - 18:14	43
18:15 - 18:29	57
18:30 - 18:44	51
18:45 - 18:59	34
19:00 - 19:14	54
19:15 - 19:29	53
19:30 - 19:44	41
19:45 - 19:59	43
20:00 - 20:14	51
20:15 - 20:29	32
20:30 - 20:44	24
20:45 - 20:59	22
21:00 - 21:14	27
21:15 - 21:29	27
21:30 - 21:44	9
21:45 - 21:59	16
22:00 - 22:14	10
22:15 - 22:29	17
22:30 - 22:44	11
22:45 - 22:59	14
23:00 - 23:14	5
23:15 - 23:29	6
23:30 - 23:44	10
23:45 - 23:59	9
Totals	**3607**
AM Peak Time	**07:56 - 08:55**
AM Peak Volume	**468**
PM Peak Time	**15:05 - 16:04**
PM Peak Volume	**256**

Daily Vehicle Volume Report

Study Date: Wednesday, 09/19/2018
Unit ID: 0161
Location: SW 16TH ST / E OF SW 70TH AV

	Eastbound Volume
00:00 - 00:14	8
00:15 - 00:29	4
00:30 - 00:44	2
00:45 - 00:59	3
01:00 - 01:14	0
01:15 - 01:29	2
01:30 - 01:44	1
01:45 - 01:59	0
02:00 - 02:14	1
02:15 - 02:29	0
02:30 - 02:44	0
02:45 - 02:59	0
03:00 - 03:14	0
03:15 - 03:29	0
03:30 - 03:44	0
03:45 - 03:59	0
04:00 - 04:14	0
04:15 - 04:29	1
04:30 - 04:44	4
04:45 - 04:59	4
05:00 - 05:14	4
05:15 - 05:29	10
05:30 - 05:44	11
05:45 - 05:59	8
06:00 - 06:14	18
06:15 - 06:29	16
06:30 - 06:44	34
06:45 - 06:59	35
07:00 - 07:14	48
07:15 - 07:29	80
07:30 - 07:44	97
07:45 - 07:59	81
08:00 - 08:14	79
08:15 - 08:29	80
08:30 - 08:44	93
08:45 - 08:59	97
09:00 - 09:14	91
09:15 - 09:29	80
09:30 - 09:44	67
09:45 - 09:59	74
10:00 - 10:14	42
10:15 - 10:29	43
10:30 - 10:44	58
10:45 - 10:59	37
11:00 - 11:14	32
11:15 - 11:29	43
11:30 - 11:44	49
11:45 - 11:59	51
12:00 - 12:14	38
12:15 - 12:29	54
12:30 - 12:44	51
12:45 - 12:59	53

Daily Vehicle Volume Report

Study Date: Wednesday, 09/19/2018
Unit ID: 0161
Location: SW 16TH ST / E OF SW 70TH AV

	Eastbound Volume
13:00 - 13:14	41
13:15 - 13:29	44
13:30 - 13:44	50
13:45 - 13:59	44
14:00 - 14:14	52
14:15 - 14:29	47
14:30 - 14:44	44
14:45 - 14:59	49
15:00 - 15:14	47
15:15 - 15:29	39
15:30 - 15:44	34
15:45 - 15:59	37
16:00 - 16:14	50
16:15 - 16:29	43
16:30 - 16:44	54
16:45 - 16:59	46
17:00 - 17:14	42
17:15 - 17:29	47
17:30 - 17:44	43
17:45 - 17:59	46
18:00 - 18:14	55
18:15 - 18:29	50
18:30 - 18:44	42
18:45 - 18:59	48
19:00 - 19:14	42
19:15 - 19:29	49
19:30 - 19:44	52
19:45 - 19:59	39
20:00 - 20:14	32
20:15 - 20:29	27
20:30 - 20:44	19
20:45 - 20:59	25
21:00 - 21:14	23
21:15 - 21:29	19
21:30 - 21:44	16
21:45 - 21:59	14
22:00 - 22:14	16
22:15 - 22:29	15
22:30 - 22:44	15
22:45 - 22:59	9
23:00 - 23:14	6
23:15 - 23:29	7
23:30 - 23:44	13
23:45 - 23:59	3
Totals	**3219**
AM Peak Time	**08:31 - 09:30**
AM Peak Volume	**363**
PM Peak Time	**12:11 - 13:10**
PM Peak Volume	**201**

Daily Vehicle Volume Report

Study Date: Thursday, 09/20/2018
Unit ID: 0161
Location: SW 16TH ST / E OF SW 70TH AV

	Eastbound Volume
00:00 - 00:14	7
00:15 - 00:29	4
00:30 - 00:44	5
00:45 - 00:59	3
01:00 - 01:14	2
01:15 - 01:29	1
01:30 - 01:44	1
01:45 - 01:59	1
02:00 - 02:14	1
02:15 - 02:29	2
02:30 - 02:44	0
02:45 - 02:59	1
03:00 - 03:14	0
03:15 - 03:29	1
03:30 - 03:44	1
03:45 - 03:59	0
04:00 - 04:14	2
04:15 - 04:29	2
04:30 - 04:44	3
04:45 - 04:59	4
05:00 - 05:14	6
05:15 - 05:29	8
05:30 - 05:44	8
05:45 - 05:59	21
06:00 - 06:14	18
06:15 - 06:29	26
06:30 - 06:44	46
06:45 - 06:59	50
07:00 - 07:14	74
07:15 - 07:29	97
07:30 - 07:44	103
07:45 - 07:59	114
08:00 - 08:14	108
08:15 - 08:29	105
08:30 - 08:44	121
08:45 - 08:59	98
09:00 - 09:14	83
09:15 - 09:29	81
09:30 - 09:44	85
09:45 - 09:59	74
10:00 - 10:14	65
10:15 - 10:29	41
10:30 - 10:44	41
10:45 - 10:59	66
11:00 - 11:14	47
11:15 - 11:29	51
11:30 - 11:44	55
11:45 - 11:59	44
12:00 - 12:14	49
12:15 - 12:29	37
12:30 - 12:44	34
12:45 - 12:59	48

Daily Vehicle Volume Report

Study Date: Thursday, 09/20/2018
Unit ID: 0161
Location: SW 16TH ST / E OF SW 70TH AV

	Eastbound Volume
13:00 - 13:14	42
13:15 - 13:29	62
13:30 - 13:44	45
13:45 - 13:59	46
14:00 - 14:14	54
14:15 - 14:29	57
14:30 - 14:44	60
14:45 - 14:59	51
15:00 - 15:14	39
15:15 - 15:29	65
15:30 - 15:44	57
15:45 - 15:59	68
16:00 - 16:14	65
16:15 - 16:29	39
16:30 - 16:44	52
16:45 - 16:59	47
17:00 - 17:14	54
17:15 - 17:29	46
17:30 - 17:44	68
17:45 - 17:59	54
18:00 - 18:14	56
18:15 - 18:29	39
18:30 - 18:44	49
18:45 - 18:59	39
19:00 - 19:14	38
19:15 - 19:29	46
19:30 - 19:44	53
19:45 - 19:59	25
20:00 - 20:14	31
20:15 - 20:29	26
20:30 - 20:44	27
20:45 - 20:59	29
21:00 - 21:14	28
21:15 - 21:29	27
21:30 - 21:44	23
21:45 - 21:59	17
22:00 - 22:14	22
22:15 - 22:29	13
22:30 - 22:44	13
22:45 - 22:59	9
23:00 - 23:14	12
23:15 - 23:29	13
23:30 - 23:44	7
23:45 - 23:59	4
Totals	**3662**
AM Peak Time	**07:38 - 08:37**
AM Peak Volume	**457**
PM Peak Time	**15:11 - 16:10**
PM Peak Volume	**258**

Daily Vehicle Volume Report

Study Date: Tuesday, 09/18/2018
Unit ID: 0056
Location: SW 16TH ST / E OF SW 70TH AV

	Westbound Volume
00:00 - 00:14	6
00:15 - 00:29	6
00:30 - 00:44	7
00:45 - 00:59	1
01:00 - 01:14	6
01:15 - 01:29	0
01:30 - 01:44	1
01:45 - 01:59	2
02:00 - 02:14	1
02:15 - 02:29	1
02:30 - 02:44	0
02:45 - 02:59	1
03:00 - 03:14	0
03:15 - 03:29	1
03:30 - 03:44	2
03:45 - 03:59	1
04:00 - 04:14	0
04:15 - 04:29	2
04:30 - 04:44	4
04:45 - 04:59	4
05:00 - 05:14	1
05:15 - 05:29	5
05:30 - 05:44	17
05:45 - 05:59	14
06:00 - 06:14	16
06:15 - 06:29	7
06:30 - 06:44	39
06:45 - 06:59	46
07:00 - 07:14	43
07:15 - 07:29	54
07:30 - 07:44	67
07:45 - 07:59	62
08:00 - 08:14	65
08:15 - 08:29	73
08:30 - 08:44	79
08:45 - 08:59	55
09:00 - 09:14	48
09:15 - 09:29	46
09:30 - 09:44	44
09:45 - 09:59	53
10:00 - 10:14	36
10:15 - 10:29	45
10:30 - 10:44	39
10:45 - 10:59	36
11:00 - 11:14	45
11:15 - 11:29	38
11:30 - 11:44	54
11:45 - 11:59	62
12:00 - 12:14	53
12:15 - 12:29	45
12:30 - 12:44	43
12:45 - 12:59	52

Daily Vehicle Volume Report

Study Date: Tuesday, 09/18/2018
Unit ID: 0056
Location: SW 16TH ST / E OF SW 70TH AV

	Westbound Volume
13:00 - 13:14	56
13:15 - 13:29	55
13:30 - 13:44	56
13:45 - 13:59	67
14:00 - 14:14	66
14:15 - 14:29	66
14:30 - 14:44	79
14:45 - 14:59	78
15:00 - 15:14	60
15:15 - 15:29	97
15:30 - 15:44	98
15:45 - 15:59	102
16:00 - 16:14	94
16:15 - 16:29	104
16:30 - 16:44	115
16:45 - 16:59	107
17:00 - 17:14	119
17:15 - 17:29	128
17:30 - 17:44	134
17:45 - 17:59	131
18:00 - 18:14	130
18:15 - 18:29	133
18:30 - 18:44	110
18:45 - 18:59	75
19:00 - 19:14	77
19:15 - 19:29	77
19:30 - 19:44	55
19:45 - 19:59	45
20:00 - 20:14	52
20:15 - 20:29	42
20:30 - 20:44	34
20:45 - 20:59	29
21:00 - 21:14	33
21:15 - 21:29	38
21:30 - 21:44	33
21:45 - 21:59	30
22:00 - 22:14	27
22:15 - 22:29	20
22:30 - 22:44	14
22:45 - 22:59	14
23:00 - 23:14	9
23:15 - 23:29	6
23:30 - 23:44	9
23:45 - 23:59	7
Totals	**4339**
AM Peak Time	**07:42 - 08:41**
AM Peak Volume	**281**
PM Peak Time	**17:23 - 18:22**
PM Peak Volume	**541**

Daily Vehicle Volume Report

Study Date: Wednesday, 09/19/2018
Unit ID: 0056
Location: SW 16TH ST / E OF SW 70TH AV

	Westbound Volume
00:00 - 00:14	4
00:15 - 00:29	3
00:30 - 00:44	3
00:45 - 00:59	3
01:00 - 01:14	4
01:15 - 01:29	2
01:30 - 01:44	1
01:45 - 01:59	2
02:00 - 02:14	2
02:15 - 02:29	4
02:30 - 02:44	2
02:45 - 02:59	0
03:00 - 03:14	1
03:15 - 03:29	1
03:30 - 03:44	1
03:45 - 03:59	2
04:00 - 04:14	2
04:15 - 04:29	0
04:30 - 04:44	0
04:45 - 04:59	2
05:00 - 05:14	2
05:15 - 05:29	2
05:30 - 05:44	12
05:45 - 05:59	11
06:00 - 06:14	15
06:15 - 06:29	13
06:30 - 06:44	26
06:45 - 06:59	26
07:00 - 07:14	25
07:15 - 07:29	50
07:30 - 07:44	57
07:45 - 07:59	43
08:00 - 08:14	54
08:15 - 08:29	51
08:30 - 08:44	55
08:45 - 08:59	57
09:00 - 09:14	53
09:15 - 09:29	46
09:30 - 09:44	65
09:45 - 09:59	59
10:00 - 10:14	46
10:15 - 10:29	50
10:30 - 10:44	42
10:45 - 10:59	58
11:00 - 11:14	34
11:15 - 11:29	45
11:30 - 11:44	50
11:45 - 11:59	44
12:00 - 12:14	48
12:15 - 12:29	56
12:30 - 12:44	51
12:45 - 12:59	54

Daily Vehicle Volume Report

Study Date: Wednesday, 09/19/2018
Unit ID: 0056
Location: SW 16TH ST / E OF SW 70TH AV

	Westbound Volume
13:00 - 13:14	55
13:15 - 13:29	64
13:30 - 13:44	71
13:45 - 13:59	54
14:00 - 14:14	46
14:15 - 14:29	75
14:30 - 14:44	81
14:45 - 14:59	78
15:00 - 15:14	62
15:15 - 15:29	76
15:30 - 15:44	69
15:45 - 15:59	61
16:00 - 16:14	75
16:15 - 16:29	102
16:30 - 16:44	100
16:45 - 16:59	112
17:00 - 17:14	109
17:15 - 17:29	128
17:30 - 17:44	126
17:45 - 17:59	144
18:00 - 18:14	117
18:15 - 18:29	112
18:30 - 18:44	104
18:45 - 18:59	93
19:00 - 19:14	64
19:15 - 19:29	71
19:30 - 19:44	66
19:45 - 19:59	48
20:00 - 20:14	55
20:15 - 20:29	34
20:30 - 20:44	31
20:45 - 20:59	44
21:00 - 21:14	27
21:15 - 21:29	28
21:30 - 21:44	26
21:45 - 21:59	15
22:00 - 22:14	21
22:15 - 22:29	16
22:30 - 22:44	15
22:45 - 22:59	13
23:00 - 23:14	10
23:15 - 23:29	9
23:30 - 23:44	9
23:45 - 23:59	5
Totals	**4060**
AM Peak Time	**08:55 - 09:54**
AM Peak Volume	**227**
PM Peak Time	**17:21 - 18:20**
PM Peak Volume	**529**

Daily Vehicle Volume Report

Study Date: Thursday, 09/20/2018
Unit ID: 0056
Location: SW 16TH ST / E OF SW 70TH AV

	Westbound Volume
00:00 - 00:14	6
00:15 - 00:29	3
00:30 - 00:44	4
00:45 - 00:59	8
01:00 - 01:14	0
01:15 - 01:29	3
01:30 - 01:44	3
01:45 - 01:59	4
02:00 - 02:14	1
02:15 - 02:29	2
02:30 - 02:44	1
02:45 - 02:59	2
03:00 - 03:14	0
03:15 - 03:29	0
03:30 - 03:44	1
03:45 - 03:59	1
04:00 - 04:14	3
04:15 - 04:29	2
04:30 - 04:44	2
04:45 - 04:59	1
05:00 - 05:14	1
05:15 - 05:29	4
05:30 - 05:44	14
05:45 - 05:59	16
06:00 - 06:14	16
06:15 - 06:29	16
06:30 - 06:44	31
06:45 - 06:59	50
07:00 - 07:14	45
07:15 - 07:29	49
07:30 - 07:44	73
07:45 - 07:59	73
08:00 - 08:14	65
08:15 - 08:29	83
08:30 - 08:44	69
08:45 - 08:59	75
09:00 - 09:14	46
09:15 - 09:29	36
09:30 - 09:44	41
09:45 - 09:59	54
10:00 - 10:14	43
10:15 - 10:29	56
10:30 - 10:44	50
10:45 - 10:59	44
11:00 - 11:14	57
11:15 - 11:29	38
11:30 - 11:44	39
11:45 - 11:59	42
12:00 - 12:14	48
12:15 - 12:29	52
12:30 - 12:44	53
12:45 - 12:59	64

Daily Vehicle Volume Report

Study Date: Thursday, 09/20/2018
Unit ID: 0056
Location: SW 16TH ST / E OF SW 70TH AV

	Westbound Volume
13:00 - 13:14	62
13:15 - 13:29	58
13:30 - 13:44	55
13:45 - 13:59	84
14:00 - 14:14	64
14:15 - 14:29	71
14:30 - 14:44	59
14:45 - 14:59	85
15:00 - 15:14	100
15:15 - 15:29	100
15:30 - 15:44	98
15:45 - 15:59	94
16:00 - 16:14	102
16:15 - 16:29	103
16:30 - 16:44	131
16:45 - 16:59	120
17:00 - 17:14	126
17:15 - 17:29	141
17:30 - 17:44	138
17:45 - 17:59	133
18:00 - 18:14	131
18:15 - 18:29	121
18:30 - 18:44	100
18:45 - 18:59	95
19:00 - 19:14	70
19:15 - 19:29	68
19:30 - 19:44	53
19:45 - 19:59	54
20:00 - 20:14	37
20:15 - 20:29	42
20:30 - 20:44	36
20:45 - 20:59	30
21:00 - 21:14	24
21:15 - 21:29	27
21:30 - 21:44	32
21:45 - 21:59	30
22:00 - 22:14	13
22:15 - 22:29	11
22:30 - 22:44	13
22:45 - 22:59	14
23:00 - 23:14	15
23:15 - 23:29	8
23:30 - 23:44	12
23:45 - 23:59	8
Totals	**4458**
AM Peak Time	**07:52 - 08:51**
AM Peak Volume	**298**
PM Peak Time	**17:11 - 18:10**
PM Peak Volume	**547**

Daily Vehicle Volume Report

Study Date: Tuesday, 09/18/2018
Unit ID: 0163
Location: SW 12TH ST / E OF SW 70TH AVE

	Eastbound Volume
00:00 - 00:14	3
00:15 - 00:29	2
00:30 - 00:44	2
00:45 - 00:59	1
01:00 - 01:14	4
01:15 - 01:29	1
01:30 - 01:44	0
01:45 - 01:59	0
02:00 - 02:14	1
02:15 - 02:29	0
02:30 - 02:44	1
02:45 - 02:59	0
03:00 - 03:14	0
03:15 - 03:29	0
03:30 - 03:44	0
03:45 - 03:59	0
04:00 - 04:14	0
04:15 - 04:29	0
04:30 - 04:44	0
04:45 - 04:59	2
05:00 - 05:14	3
05:15 - 05:29	0
05:30 - 05:44	3
05:45 - 05:59	3
06:00 - 06:14	4
06:15 - 06:29	11
06:30 - 06:44	11
06:45 - 06:59	15
07:00 - 07:14	22
07:15 - 07:29	28
07:30 - 07:44	29
07:45 - 07:59	24
08:00 - 08:14	30
08:15 - 08:29	20
08:30 - 08:44	26
08:45 - 08:59	36
09:00 - 09:14	25
09:15 - 09:29	19
09:30 - 09:44	28
09:45 - 09:59	28
10:00 - 10:14	30
10:15 - 10:29	22
10:30 - 10:44	18
10:45 - 10:59	31
11:00 - 11:14	15
11:15 - 11:29	17
11:30 - 11:44	22
11:45 - 11:59	25
12:00 - 12:14	20
12:15 - 12:29	26
12:30 - 12:44	20
12:45 - 12:59	33

Daily Vehicle Volume Report

Study Date: Tuesday, 09/18/2018
Unit ID: 0163
Location: SW 12TH ST / E OF SW 70TH AVE

	Eastbound Volume
13:00 - 13:14	26
13:15 - 13:29	28
13:30 - 13:44	21
13:45 - 13:59	25
14:00 - 14:14	23
14:15 - 14:29	17
14:30 - 14:44	23
14:45 - 14:59	24
15:00 - 15:14	28
15:15 - 15:29	23
15:30 - 15:44	24
15:45 - 15:59	20
16:00 - 16:14	31
16:15 - 16:29	26
16:30 - 16:44	29
16:45 - 16:59	26
17:00 - 17:14	40
17:15 - 17:29	16
17:30 - 17:44	26
17:45 - 17:59	31
18:00 - 18:14	34
18:15 - 18:29	20
18:30 - 18:44	19
18:45 - 18:59	17
19:00 - 19:14	11
19:15 - 19:29	20
19:30 - 19:44	19
19:45 - 19:59	14
20:00 - 20:14	9
20:15 - 20:29	15
20:30 - 20:44	10
20:45 - 20:59	17
21:00 - 21:14	11
21:15 - 21:29	7
21:30 - 21:44	6
21:45 - 21:59	7
22:00 - 22:14	3
22:15 - 22:29	6
22:30 - 22:44	3
22:45 - 22:59	6
23:00 - 23:14	3
23:15 - 23:29	2
23:30 - 23:44	3
23:45 - 23:59	1
Totals	**1431**
AM Peak Time	**08:06 - 09:05**
AM Peak Volume	**116**
PM Peak Time	**16:12 - 17:11**
PM Peak Volume	**123**

Daily Vehicle Volume Report

Study Date: Wednesday, 09/19/2018
Unit ID: 0163
Location: SW 12TH ST / E OF SW 70TH AVE

	Eastbound Volume
00:00 - 00:14	1
00:15 - 00:29	2
00:30 - 00:44	1
00:45 - 00:59	0
01:00 - 01:14	0
01:15 - 01:29	1
01:30 - 01:44	0
01:45 - 01:59	0
02:00 - 02:14	0
02:15 - 02:29	0
02:30 - 02:44	0
02:45 - 02:59	0
03:00 - 03:14	0
03:15 - 03:29	0
03:30 - 03:44	1
03:45 - 03:59	0
04:00 - 04:14	0
04:15 - 04:29	0
04:30 - 04:44	0
04:45 - 04:59	0
05:00 - 05:14	2
05:15 - 05:29	1
05:30 - 05:44	4
05:45 - 05:59	4
06:00 - 06:14	5
06:15 - 06:29	8
06:30 - 06:44	10
06:45 - 06:59	19
07:00 - 07:14	18
07:15 - 07:29	25
07:30 - 07:44	27
07:45 - 07:59	27
08:00 - 08:14	20
08:15 - 08:29	19
08:30 - 08:44	29
08:45 - 08:59	22
09:00 - 09:14	26
09:15 - 09:29	20
09:30 - 09:44	29
09:45 - 09:59	15
10:00 - 10:14	26
10:15 - 10:29	23
10:30 - 10:44	21
10:45 - 10:59	22
11:00 - 11:14	31
11:15 - 11:29	19
11:30 - 11:44	20
11:45 - 11:59	20
12:00 - 12:14	29
12:15 - 12:29	24
12:30 - 12:44	27
12:45 - 12:59	25

Daily Vehicle Volume Report

Study Date: Wednesday, 09/19/2018
Unit ID: 0163
Location: SW 12TH ST / E OF SW 70TH AVE

	Eastbound Volume
13:00 - 13:14	35
13:15 - 13:29	32
13:30 - 13:44	20
13:45 - 13:59	21
14:00 - 14:14	11
14:15 - 14:29	30
14:30 - 14:44	22
14:45 - 14:59	33
15:00 - 15:14	17
15:15 - 15:29	23
15:30 - 15:44	31
15:45 - 15:59	30
16:00 - 16:14	28
16:15 - 16:29	11
16:30 - 16:44	37
16:45 - 16:59	26
17:00 - 17:14	27
17:15 - 17:29	22
17:30 - 17:44	16
17:45 - 17:59	16
18:00 - 18:14	24
18:15 - 18:29	26
18:30 - 18:44	25
18:45 - 18:59	20
19:00 - 19:14	22
19:15 - 19:29	23
19:30 - 19:44	17
19:45 - 19:59	13
20:00 - 20:14	9
20:15 - 20:29	11
20:30 - 20:44	8
20:45 - 20:59	8
21:00 - 21:14	8
21:15 - 21:29	11
21:30 - 21:44	10
21:45 - 21:59	9
22:00 - 22:14	4
22:15 - 22:29	8
22:30 - 22:44	3
22:45 - 22:59	4
23:00 - 23:14	0
23:15 - 23:29	3
23:30 - 23:44	0
23:45 - 23:59	1
Totals	**1378**
AM Peak Time	**08:34 - 09:33**
AM Peak Volume	**105**
PM Peak Time	**12:27 - 13:26**
PM Peak Volume	**119**

Daily Vehicle Volume Report

Study Date: Thursday, 09/20/2018
Unit ID: 0163
Location: SW 12TH ST / E OF SW 70TH AVE

	Eastbound Volume
00:00 - 00:14	2
00:15 - 00:29	1
00:30 - 00:44	2
00:45 - 00:59	1
01:00 - 01:14	0
01:15 - 01:29	0
01:30 - 01:44	2
01:45 - 01:59	0
02:00 - 02:14	0
02:15 - 02:29	0
02:30 - 02:44	0
02:45 - 02:59	0
03:00 - 03:14	1
03:15 - 03:29	0
03:30 - 03:44	0
03:45 - 03:59	0
04:00 - 04:14	0
04:15 - 04:29	0
04:30 - 04:44	0
04:45 - 04:59	0
05:00 - 05:14	3
05:15 - 05:29	1
05:30 - 05:44	2
05:45 - 05:59	5
06:00 - 06:14	3
06:15 - 06:29	8
06:30 - 06:44	15
06:45 - 06:59	15
07:00 - 07:14	25
07:15 - 07:29	30
07:30 - 07:44	24
07:45 - 07:59	27
08:00 - 08:14	40
08:15 - 08:29	45
08:30 - 08:44	34
08:45 - 08:59	27
09:00 - 09:14	39
09:15 - 09:29	29
09:30 - 09:44	34
09:45 - 09:59	30
10:00 - 10:14	25
10:15 - 10:29	14
10:30 - 10:44	20
10:45 - 10:59	25
11:00 - 11:14	24
11:15 - 11:29	28
11:30 - 11:44	24
11:45 - 11:59	25
12:00 - 12:14	25
12:15 - 12:29	23
12:30 - 12:44	18
12:45 - 12:59	22

Daily Vehicle Volume Report

Study Date: Thursday, 09/20/2018
Unit ID: 0163
Location: SW 12TH ST / E OF SW 70TH AVE

	Eastbound Volume
13:00 - 13:14	32
13:15 - 13:29	19
13:30 - 13:44	24
13:45 - 13:59	21
14:00 - 14:14	18
14:15 - 14:29	24
14:30 - 14:44	19
14:45 - 14:59	19
15:00 - 15:14	26
15:15 - 15:29	32
15:30 - 15:44	23
15:45 - 15:59	18
16:00 - 16:14	26
16:15 - 16:29	21
16:30 - 16:44	20
16:45 - 16:59	21
17:00 - 17:14	23
17:15 - 17:29	25
17:30 - 17:44	26
17:45 - 17:59	11
18:00 - 18:14	25
18:15 - 18:29	14
18:30 - 18:44	25
18:45 - 18:59	19
19:00 - 19:14	24
19:15 - 19:29	23
19:30 - 19:44	16
19:45 - 19:59	14
20:00 - 20:14	12
20:15 - 20:29	6
20:30 - 20:44	6
20:45 - 20:59	16
21:00 - 21:14	4
21:15 - 21:29	8
21:30 - 21:44	6
21:45 - 21:59	2
22:00 - 22:14	10
22:15 - 22:29	5
22:30 - 22:44	5
22:45 - 22:59	2
23:00 - 23:14	5
23:15 - 23:29	4
23:30 - 23:44	3
23:45 - 23:59	0
Totals	**1420**
AM Peak Time	**08:09 - 09:08**
AM Peak Volume	**150**
PM Peak Time	**14:55 - 15:54**
PM Peak Volume	**105**

Daily Vehicle Volume Report

Study Date: Tuesday, 09/18/2018
Unit ID: 0163
Location: SW 12TH ST / E OF SW 70TH AVE

	Westbound Volume
00:00 - 00:14	2
00:15 - 00:29	3
00:30 - 00:44	1
00:45 - 00:59	0
01:00 - 01:14	3
01:15 - 01:29	0
01:30 - 01:44	0
01:45 - 01:59	0
02:00 - 02:14	2
02:15 - 02:29	0
02:30 - 02:44	0
02:45 - 02:59	0
03:00 - 03:14	0
03:15 - 03:29	0
03:30 - 03:44	1
03:45 - 03:59	0
04:00 - 04:14	1
04:15 - 04:29	0
04:30 - 04:44	0
04:45 - 04:59	0
05:00 - 05:14	0
05:15 - 05:29	3
05:30 - 05:44	4
05:45 - 05:59	5
06:00 - 06:14	7
06:15 - 06:29	15
06:30 - 06:44	18
06:45 - 06:59	12
07:00 - 07:14	13
07:15 - 07:29	42
07:30 - 07:44	26
07:45 - 07:59	34
08:00 - 08:14	43
08:15 - 08:29	32
08:30 - 08:44	26
08:45 - 08:59	21
09:00 - 09:14	25
09:15 - 09:29	21
09:30 - 09:44	35
09:45 - 09:59	34
10:00 - 10:14	28
10:15 - 10:29	32
10:30 - 10:44	34
10:45 - 10:59	24
11:00 - 11:14	20
11:15 - 11:29	34
11:30 - 11:44	33
11:45 - 11:59	23
12:00 - 12:14	28
12:15 - 12:29	32
12:30 - 12:44	33
12:45 - 12:59	32

Daily Vehicle Volume Report

Study Date: Tuesday, 09/18/2018
Unit ID: 0163
Location: SW 12TH ST / E OF SW 70TH AVE

	Westbound Volume
13:00 - 13:14	42
13:15 - 13:29	30
13:30 - 13:44	30
13:45 - 13:59	33
14:00 - 14:14	41
14:15 - 14:29	44
14:30 - 14:44	38
14:45 - 14:59	27
15:00 - 15:14	35
15:15 - 15:29	37
15:30 - 15:44	55
15:45 - 15:59	48
16:00 - 16:14	47
16:15 - 16:29	54
16:30 - 16:44	62
16:45 - 16:59	61
17:00 - 17:14	92
17:15 - 17:29	82
17:30 - 17:44	89
17:45 - 17:59	85
18:00 - 18:14	81
18:15 - 18:29	71
18:30 - 18:44	52
18:45 - 18:59	52
19:00 - 19:14	41
19:15 - 19:29	32
19:30 - 19:44	35
19:45 - 19:59	28
20:00 - 20:14	29
20:15 - 20:29	19
20:30 - 20:44	19
20:45 - 20:59	14
21:00 - 21:14	10
21:15 - 21:29	11
21:30 - 21:44	16
21:45 - 21:59	19
22:00 - 22:14	6
22:15 - 22:29	6
22:30 - 22:44	8
22:45 - 22:59	5
23:00 - 23:14	12
23:15 - 23:29	6
23:30 - 23:44	4
23:45 - 23:59	2
Totals	**2392**
AM Peak Time	**07:17 - 08:16**
AM Peak Volume	**152**
PM Peak Time	**16:58 - 17:57**
PM Peak Volume	**351**

Daily Vehicle Volume Report

Study Date: Wednesday, 09/19/2018
Unit ID: 0163
Location: SW 12TH ST / E OF SW 70TH AVE

	Westbound Volume
00:00 - 00:14	3
00:15 - 00:29	4
00:30 - 00:44	1
00:45 - 00:59	1
01:00 - 01:14	1
01:15 - 01:29	1
01:30 - 01:44	1
01:45 - 01:59	0
02:00 - 02:14	2
02:15 - 02:29	1
02:30 - 02:44	0
02:45 - 02:59	1
03:00 - 03:14	0
03:15 - 03:29	0
03:30 - 03:44	0
03:45 - 03:59	1
04:00 - 04:14	0
04:15 - 04:29	0
04:30 - 04:44	0
04:45 - 04:59	1
05:00 - 05:14	1
05:15 - 05:29	1
05:30 - 05:44	1
05:45 - 05:59	5
06:00 - 06:14	4
06:15 - 06:29	11
06:30 - 06:44	16
06:45 - 06:59	15
07:00 - 07:14	23
07:15 - 07:29	23
07:30 - 07:44	29
07:45 - 07:59	34
08:00 - 08:14	29
08:15 - 08:29	27
08:30 - 08:44	30
08:45 - 08:59	26
09:00 - 09:14	22
09:15 - 09:29	27
09:30 - 09:44	36
09:45 - 09:59	44
10:00 - 10:14	32
10:15 - 10:29	31
10:30 - 10:44	22
10:45 - 10:59	25
11:00 - 11:14	29
11:15 - 11:29	38
11:30 - 11:44	30
11:45 - 11:59	37
12:00 - 12:14	34
12:15 - 12:29	35
12:30 - 12:44	47
12:45 - 12:59	39

Daily Vehicle Volume Report

Study Date: Wednesday, 09/19/2018
Unit ID: 0163
Location: SW 12TH ST / E OF SW 70TH AVE

	Westbound Volume
13:00 - 13:14	35
13:15 - 13:29	38
13:30 - 13:44	41
13:45 - 13:59	32
14:00 - 14:14	33
14:15 - 14:29	37
14:30 - 14:44	38
14:45 - 14:59	45
15:00 - 15:14	40
15:15 - 15:29	40
15:30 - 15:44	54
15:45 - 15:59	44
16:00 - 16:14	37
16:15 - 16:29	57
16:30 - 16:44	53
16:45 - 16:59	66
17:00 - 17:14	75
17:15 - 17:29	58
17:30 - 17:44	79
17:45 - 17:59	63
18:00 - 18:14	62
18:15 - 18:29	49
18:30 - 18:44	47
18:45 - 18:59	46
19:00 - 19:14	47
19:15 - 19:29	27
19:30 - 19:44	41
19:45 - 19:59	33
20:00 - 20:14	21
20:15 - 20:29	16
20:30 - 20:44	17
20:45 - 20:59	11
21:00 - 21:14	22
21:15 - 21:29	27
21:30 - 21:44	16
21:45 - 21:59	11
22:00 - 22:14	10
22:15 - 22:29	11
22:30 - 22:44	10
22:45 - 22:59	4
23:00 - 23:14	6
23:15 - 23:29	5
23:30 - 23:44	4
23:45 - 23:59	4
Totals	**2333**
AM Peak Time	**09:34 - 10:33**
AM Peak Volume	**145**
PM Peak Time	**16:49 - 17:48**
PM Peak Volume	**285**

Daily Vehicle Volume Report

Study Date: Thursday, 09/20/2018
Unit ID: 0163
Location: SW 12TH ST / E OF SW 70TH AVE

	Westbound Volume
00:00 - 00:14	0
00:15 - 00:29	0
00:30 - 00:44	5
00:45 - 00:59	1
01:00 - 01:14	0
01:15 - 01:29	1
01:30 - 01:44	0
01:45 - 01:59	1
02:00 - 02:14	0
02:15 - 02:29	0
02:30 - 02:44	0
02:45 - 02:59	0
03:00 - 03:14	1
03:15 - 03:29	1
03:30 - 03:44	0
03:45 - 03:59	1
04:00 - 04:14	0
04:15 - 04:29	1
04:30 - 04:44	0
04:45 - 04:59	0
05:00 - 05:14	0
05:15 - 05:29	1
05:30 - 05:44	4
05:45 - 05:59	2
06:00 - 06:14	6
06:15 - 06:29	13
06:30 - 06:44	18
06:45 - 06:59	15
07:00 - 07:14	16
07:15 - 07:29	38
07:30 - 07:44	34
07:45 - 07:59	41
08:00 - 08:14	46
08:15 - 08:29	32
08:30 - 08:44	27
08:45 - 08:59	35
09:00 - 09:14	26
09:15 - 09:29	29
09:30 - 09:44	30
09:45 - 09:59	35
10:00 - 10:14	26
10:15 - 10:29	30
10:30 - 10:44	31
10:45 - 10:59	31
11:00 - 11:14	27
11:15 - 11:29	29
11:30 - 11:44	32
11:45 - 11:59	24
12:00 - 12:14	25
12:15 - 12:29	36
12:30 - 12:44	30
12:45 - 12:59	39

Daily Vehicle Volume Report

Study Date: Thursday, 09/20/2018
Unit ID: 0163
Location: SW 12TH ST / E OF SW 70TH AVE

	Westbound Volume
13:00 - 13:14	32
13:15 - 13:29	26
13:30 - 13:44	36
13:45 - 13:59	30
14:00 - 14:14	38
14:15 - 14:29	36
14:30 - 14:44	43
14:45 - 14:59	38
15:00 - 15:14	41
15:15 - 15:29	60
15:30 - 15:44	28
15:45 - 15:59	49
16:00 - 16:14	54
16:15 - 16:29	40
16:30 - 16:44	51
16:45 - 16:59	51
17:00 - 17:14	75
17:15 - 17:29	78
17:30 - 17:44	69
17:45 - 17:59	84
18:00 - 18:14	68
18:15 - 18:29	46
18:30 - 18:44	39
18:45 - 18:59	40
19:00 - 19:14	32
19:15 - 19:29	28
19:30 - 19:44	28
19:45 - 19:59	25
20:00 - 20:14	29
20:15 - 20:29	14
20:30 - 20:44	15
20:45 - 20:59	13
21:00 - 21:14	10
21:15 - 21:29	15
21:30 - 21:44	20
21:45 - 21:59	15
22:00 - 22:14	8
22:15 - 22:29	5
22:30 - 22:44	7
22:45 - 22:59	6
23:00 - 23:14	5
23:15 - 23:29	2
23:30 - 23:44	4
23:45 - 23:59	3
Totals	**2256**
AM Peak Time	**07:19 - 08:18**
AM Peak Volume	**165**
PM Peak Time	**17:03 - 18:02**
PM Peak Volume	**316**

Daily Vehicle Volume Report

Study Date: Tuesday, 09/18/2018
Unit ID: 0176
Location: TAMIAMI TRAIL / W OF SW 69TH ST

	Eastbound Volume
00:00 - 00:14	58
00:15 - 00:29	65
00:30 - 00:44	52
00:45 - 00:59	61
01:00 - 01:14	36
01:15 - 01:29	41
01:30 - 01:44	24
01:45 - 01:59	39
02:00 - 02:14	36
02:15 - 02:29	28
02:30 - 02:44	27
02:45 - 02:59	31
03:00 - 03:14	23
03:15 - 03:29	22
03:30 - 03:44	47
03:45 - 03:59	48
04:00 - 04:14	37
04:15 - 04:29	42
04:30 - 04:44	54
04:45 - 04:59	66
05:00 - 05:14	77
05:15 - 05:29	117
05:30 - 05:44	172
05:45 - 05:59	220
06:00 - 06:14	259
06:15 - 06:29	347
06:30 - 06:44	352
06:45 - 06:59	425
07:00 - 07:14	458
07:15 - 07:29	439
07:30 - 07:44	394
07:45 - 07:59	382
08:00 - 08:14	412
08:15 - 08:29	394
08:30 - 08:44	382
08:45 - 08:59	431
09:00 - 09:14	435
09:15 - 09:29	420
09:30 - 09:44	452
09:45 - 09:59	409
10:00 - 10:14	468
10:15 - 10:29	402
10:30 - 10:44	345
10:45 - 10:59	384
11:00 - 11:14	381
11:15 - 11:29	383
11:30 - 11:44	384
11:45 - 11:59	337
12:00 - 12:14	347
12:15 - 12:29	337
12:30 - 12:44	378
12:45 - 12:59	334

Daily Vehicle Volume Report

Study Date: Tuesday, 09/18/2018
Unit ID: 0176
Location: TAMIAMI TRAIL / W OF SW 69TH ST

	Eastbound Volume
13:00 - 13:14	367
13:15 - 13:29	347
13:30 - 13:44	345
13:45 - 13:59	348
14:00 - 14:14	368
14:15 - 14:29	383
14:30 - 14:44	328
14:45 - 14:59	378
15:00 - 15:14	302
15:15 - 15:29	395
15:30 - 15:44	383
15:45 - 15:59	388
16:00 - 16:14	405
16:15 - 16:29	373
16:30 - 16:44	370
16:45 - 16:59	391
17:00 - 17:14	372
17:15 - 17:29	380
17:30 - 17:44	367
17:45 - 17:59	363
18:00 - 18:14	330
18:15 - 18:29	323
18:30 - 18:44	300
18:45 - 18:59	333
19:00 - 19:14	316
19:15 - 19:29	319
19:30 - 19:44	321
19:45 - 19:59	307
20:00 - 20:14	318
20:15 - 20:29	319
20:30 - 20:44	292
20:45 - 20:59	252
21:00 - 21:14	257
21:15 - 21:29	265
21:30 - 21:44	260
21:45 - 21:59	215
22:00 - 22:14	212
22:15 - 22:29	213
22:30 - 22:44	218
22:45 - 22:59	178
23:00 - 23:14	146
23:15 - 23:29	122
23:30 - 23:44	100
23:45 - 23:59	94
Totals	**25657**
AM Peak Time	**09:12 - 10:11**
AM Peak Volume	**1775**
PM Peak Time	**15:23 - 16:22**
PM Peak Volume	**1585**

Daily Vehicle Volume Report

Study Date: Wednesday, 09/19/2018
Unit ID: 0176
Location: TAMIAMI TRAIL / W OF SW 69TH ST

	Eastbound Volume
00:00 - 00:14	75
00:15 - 00:29	50
00:30 - 00:44	52
00:45 - 00:59	41
01:00 - 01:14	49
01:15 - 01:29	37
01:30 - 01:44	31
01:45 - 01:59	23
02:00 - 02:14	35
02:15 - 02:29	32
02:30 - 02:44	33
02:45 - 02:59	25
03:00 - 03:14	17
03:15 - 03:29	19
03:30 - 03:44	18
03:45 - 03:59	26
04:00 - 04:14	34
04:15 - 04:29	46
04:30 - 04:44	41
04:45 - 04:59	64
05:00 - 05:14	72
05:15 - 05:29	110
05:30 - 05:44	150
05:45 - 05:59	181
06:00 - 06:14	235
06:15 - 06:29	329
06:30 - 06:44	374
06:45 - 06:59	421
07:00 - 07:14	426
07:15 - 07:29	412
07:30 - 07:44	423
07:45 - 07:59	439
08:00 - 08:14	414
08:15 - 08:29	441
08:30 - 08:44	427
08:45 - 08:59	392
09:00 - 09:14	470
09:15 - 09:29	368
09:30 - 09:44	395
09:45 - 09:59	358
10:00 - 10:14	408
10:15 - 10:29	378
10:30 - 10:44	384
10:45 - 10:59	396
11:00 - 11:14	341
11:15 - 11:29	405
11:30 - 11:44	377
11:45 - 11:59	370
12:00 - 12:14	360
12:15 - 12:29	360
12:30 - 12:44	368
12:45 - 12:59	363

Daily Vehicle Volume Report

Study Date: Wednesday, 09/19/2018
Unit ID: 0176
Location: TAMIAMI TRAIL / W OF SW 69TH ST

	Eastbound Volume
13:00 - 13:14	378
13:15 - 13:29	365
13:30 - 13:44	391
13:45 - 13:59	334
14:00 - 14:14	356
14:15 - 14:29	402
14:30 - 14:44	350
14:45 - 14:59	381
15:00 - 15:14	354
15:15 - 15:29	370
15:30 - 15:44	360
15:45 - 15:59	399
16:00 - 16:14	368
16:15 - 16:29	398
16:30 - 16:44	369
16:45 - 16:59	348
17:00 - 17:14	365
17:15 - 17:29	426
17:30 - 17:44	395
17:45 - 17:59	376
18:00 - 18:14	377
18:15 - 18:29	367
18:30 - 18:44	368
18:45 - 18:59	380
19:00 - 19:14	377
19:15 - 19:29	351
19:30 - 19:44	293
19:45 - 19:59	311
20:00 - 20:14	279
20:15 - 20:29	315
20:30 - 20:44	281
20:45 - 20:59	244
21:00 - 21:14	261
21:15 - 21:29	221
21:30 - 21:44	213
21:45 - 21:59	204
22:00 - 22:14	211
22:15 - 22:29	221
22:30 - 22:44	167
22:45 - 22:59	154
23:00 - 23:14	142
23:15 - 23:29	146
23:30 - 23:44	137
23:45 - 23:59	87
Totals	**25687**
AM Peak Time	**07:47 - 08:46**
AM Peak Volume	**1732**
PM Peak Time	**17:04 - 18:03**
PM Peak Volume	**1593**

Daily Vehicle Volume Report

Study Date: Thursday, 09/20/2018
Unit ID: 0176
Location: TAMIAMI TRAIL / W OF SW 69TH ST

	Eastbound Volume
00:00 - 00:14	68
00:15 - 00:29	67
00:30 - 00:44	64
00:45 - 00:59	45
01:00 - 01:14	53
01:15 - 01:29	48
01:30 - 01:44	36
01:45 - 01:59	32
02:00 - 02:14	31
02:15 - 02:29	19
02:30 - 02:44	25
02:45 - 02:59	24
03:00 - 03:14	24
03:15 - 03:29	25
03:30 - 03:44	33
03:45 - 03:59	29
04:00 - 04:14	28
04:15 - 04:29	50
04:30 - 04:44	42
04:45 - 04:59	54
05:00 - 05:14	66
05:15 - 05:29	105
05:30 - 05:44	156
05:45 - 05:59	217
06:00 - 06:14	250
06:15 - 06:29	348
06:30 - 06:44	357
06:45 - 06:59	438
07:00 - 07:14	462
07:15 - 07:29	454
07:30 - 07:44	412
07:45 - 07:59	382
08:00 - 08:14	432
08:15 - 08:29	374
08:30 - 08:44	418
08:45 - 08:59	410
09:00 - 09:14	446
09:15 - 09:29	454
09:30 - 09:44	409
09:45 - 09:59	402
10:00 - 10:14	409
10:15 - 10:29	375
10:30 - 10:44	358
10:45 - 10:59	390
11:00 - 11:14	354
11:15 - 11:29	373
11:30 - 11:44	358
11:45 - 11:59	375
12:00 - 12:14	325
12:15 - 12:29	339
12:30 - 12:44	368
12:45 - 12:59	343

Daily Vehicle Volume Report

Study Date: Thursday, 09/20/2018
Unit ID: 0176
Location: TAMIAMI TRAIL / W OF SW 69TH ST

	Eastbound Volume
13:00 - 13:14	353
13:15 - 13:29	357
13:30 - 13:44	364
13:45 - 13:59	336
14:00 - 14:14	340
14:15 - 14:29	352
14:30 - 14:44	401
14:45 - 14:59	336
15:00 - 15:14	311
15:15 - 15:29	395
15:30 - 15:44	406
15:45 - 15:59	366
16:00 - 16:14	375
16:15 - 16:29	370
16:30 - 16:44	350
16:45 - 16:59	360
17:00 - 17:14	366
17:15 - 17:29	401
17:30 - 17:44	352
17:45 - 17:59	308
18:00 - 18:14	367
18:15 - 18:29	340
18:30 - 18:44	332
18:45 - 18:59	355
19:00 - 19:14	334
19:15 - 19:29	333
19:30 - 19:44	303
19:45 - 19:59	308
20:00 - 20:14	327
20:15 - 20:29	332
20:30 - 20:44	278
20:45 - 20:59	281
21:00 - 21:14	263
21:15 - 21:29	244
21:30 - 21:44	222
21:45 - 21:59	194
22:00 - 22:14	207
22:15 - 22:29	200
22:30 - 22:44	221
22:45 - 22:59	151
23:00 - 23:14	159
23:15 - 23:29	159
23:30 - 23:44	120
23:45 - 23:59	101
Totals	**25486**
AM Peak Time	**06:39 - 07:38**
AM Peak Volume	**1783**
PM Peak Time	**15:12 - 16:11**
PM Peak Volume	**1543**

Daily Vehicle Volume Report

Study Date: Tuesday, 09/18/2018
Unit ID: 0222
Location: TAMIAMI TRAIL / W OF SW 69TH ST

	Westbound Volume
00:00 - 00:14	94
00:15 - 00:29	81
00:30 - 00:44	78
00:45 - 00:59	63
01:00 - 01:14	45
01:15 - 01:29	27
01:30 - 01:44	39
01:45 - 01:59	27
02:00 - 02:14	40
02:15 - 02:29	32
02:30 - 02:44	38
02:45 - 02:59	32
03:00 - 03:14	25
03:15 - 03:29	24
03:30 - 03:44	26
03:45 - 03:59	36
04:00 - 04:14	24
04:15 - 04:29	33
04:30 - 04:44	50
04:45 - 04:59	55
05:00 - 05:14	57
05:15 - 05:29	71
05:30 - 05:44	125
05:45 - 05:59	115
06:00 - 06:14	187
06:15 - 06:29	251
06:30 - 06:44	273
06:45 - 06:59	254
07:00 - 07:14	293
07:15 - 07:29	327
07:30 - 07:44	344
07:45 - 07:59	296
08:00 - 08:14	350
08:15 - 08:29	311
08:30 - 08:44	330
08:45 - 08:59	330
09:00 - 09:14	316
09:15 - 09:29	320
09:30 - 09:44	337
09:45 - 09:59	330
10:00 - 10:14	333
10:15 - 10:29	316
10:30 - 10:44	323
10:45 - 10:59	322
11:00 - 11:14	335
11:15 - 11:29	320
11:30 - 11:44	364
11:45 - 11:59	354
12:00 - 12:14	370
12:15 - 12:29	417
12:30 - 12:44	365
12:45 - 12:59	389

Daily Vehicle Volume Report

Study Date: Tuesday, 09/18/2018
Unit ID: 0222
Location: TAMIAMI TRAIL / W OF SW 69TH ST

	Westbound Volume
13:00 - 13:14	391
13:15 - 13:29	393
13:30 - 13:44	386
13:45 - 13:59	366
14:00 - 14:14	397
14:15 - 14:29	371
14:30 - 14:44	353
14:45 - 14:59	362
15:00 - 15:14	387
15:15 - 15:29	366
15:30 - 15:44	372
15:45 - 15:59	432
16:00 - 16:14	382
16:15 - 16:29	357
16:30 - 16:44	367
16:45 - 16:59	374
17:00 - 17:14	298
17:15 - 17:29	266
17:30 - 17:44	122
17:45 - 17:59	229
18:00 - 18:14	252
18:15 - 18:29	285
18:30 - 18:44	308
18:45 - 18:59	380
19:00 - 19:14	408
19:15 - 19:29	410
19:30 - 19:44	383
19:45 - 19:59	352
20:00 - 20:14	342
20:15 - 20:29	340
20:30 - 20:44	267
20:45 - 20:59	279
21:00 - 21:14	248
21:15 - 21:29	245
21:30 - 21:44	194
21:45 - 21:59	223
22:00 - 22:14	249
22:15 - 22:29	201
22:30 - 22:44	192
22:45 - 22:59	146
23:00 - 23:14	150
23:15 - 23:29	122
23:30 - 23:44	118
23:45 - 23:59	110
Totals	**23469**
AM Peak Time	**10:59 - 11:58**
AM Peak Volume	**1390**
PM Peak Time	**18:48 - 19:47**
PM Peak Volume	**1605**

Daily Vehicle Volume Report

Study Date: Wednesday, 09/19/2018
Unit ID: 0222
Location: TAMIAMI TRAIL / W OF SW 69TH ST

	Westbound Volume
00:00 - 00:14	88
00:15 - 00:29	87
00:30 - 00:44	65
00:45 - 00:59	47
01:00 - 01:14	53
01:15 - 01:29	44
01:30 - 01:44	41
01:45 - 01:59	43
02:00 - 02:14	46
02:15 - 02:29	23
02:30 - 02:44	36
02:45 - 02:59	26
03:00 - 03:14	22
03:15 - 03:29	24
03:30 - 03:44	38
03:45 - 03:59	32
04:00 - 04:14	26
04:15 - 04:29	33
04:30 - 04:44	43
04:45 - 04:59	41
05:00 - 05:14	65
05:15 - 05:29	81
05:30 - 05:44	111
05:45 - 05:59	115
06:00 - 06:14	164
06:15 - 06:29	229
06:30 - 06:44	227
06:45 - 06:59	215
07:00 - 07:14	276
07:15 - 07:29	344
07:30 - 07:44	329
07:45 - 07:59	356
08:00 - 08:14	328
08:15 - 08:29	331
08:30 - 08:44	346
08:45 - 08:59	344
09:00 - 09:14	279
09:15 - 09:29	289
09:30 - 09:44	268
09:45 - 09:59	305
10:00 - 10:14	328
10:15 - 10:29	333
10:30 - 10:44	344
10:45 - 10:59	327
11:00 - 11:14	300
11:15 - 11:29	347
11:30 - 11:44	341
11:45 - 11:59	350
12:00 - 12:14	348
12:15 - 12:29	416
12:30 - 12:44	383
12:45 - 12:59	362

Daily Vehicle Volume Report

Study Date: Wednesday, 09/19/2018
Unit ID: 0222
Location: TAMIAMI TRAIL / W OF SW 69TH ST

	Westbound Volume
13:00 - 13:14	390
13:15 - 13:29	373
13:30 - 13:44	400
13:45 - 13:59	327
14:00 - 14:14	374
14:15 - 14:29	365
14:30 - 14:44	402
14:45 - 14:59	385
15:00 - 15:14	401
15:15 - 15:29	379
15:30 - 15:44	404
15:45 - 15:59	403
16:00 - 16:14	413
16:15 - 16:29	398
16:30 - 16:44	394
16:45 - 16:59	337
17:00 - 17:14	320
17:15 - 17:29	286
17:30 - 17:44	231
17:45 - 17:59	252
18:00 - 18:14	279
18:15 - 18:29	308
18:30 - 18:44	341
18:45 - 18:59	330
19:00 - 19:14	419
19:15 - 19:29	272
19:30 - 19:44	216
19:45 - 19:59	250
20:00 - 20:14	314
20:15 - 20:29	295
20:30 - 20:44	269
20:45 - 20:59	274
21:00 - 21:14	263
21:15 - 21:29	252
21:30 - 21:44	241
21:45 - 21:59	244
22:00 - 22:14	209
22:15 - 22:29	214
22:30 - 22:44	195
22:45 - 22:59	172
23:00 - 23:14	145
23:15 - 23:29	118
23:30 - 23:44	127
23:45 - 23:59	114
Totals	**23134**
AM Peak Time	**07:48 - 08:47**
AM Peak Volume	**1384**
PM Peak Time	**15:39 - 16:38**
PM Peak Volume	**1640**

Daily Vehicle Volume Report

Study Date: Thursday, 09/20/2018
Unit ID: 0222
Location: TAMIAMI TRAIL / W OF SW 69TH ST

	Westbound Volume
00:00 - 00:14	98
00:15 - 00:29	82
00:30 - 00:44	56
00:45 - 00:59	59
01:00 - 01:14	58
01:15 - 01:29	40
01:30 - 01:44	35
01:45 - 01:59	40
02:00 - 02:14	36
02:15 - 02:29	32
02:30 - 02:44	31
02:45 - 02:59	29
03:00 - 03:14	26
03:15 - 03:29	28
03:30 - 03:44	36
03:45 - 03:59	31
04:00 - 04:14	33
04:15 - 04:29	23
04:30 - 04:44	46
04:45 - 04:59	49
05:00 - 05:14	59
05:15 - 05:29	75
05:30 - 05:44	107
05:45 - 05:59	118
06:00 - 06:14	184
06:15 - 06:29	245
06:30 - 06:44	264
06:45 - 06:59	266
07:00 - 07:14	268
07:15 - 07:29	340
07:30 - 07:44	322
07:45 - 07:59	371
08:00 - 08:14	313
08:15 - 08:29	329
08:30 - 08:44	335
08:45 - 08:59	340
09:00 - 09:14	308
09:15 - 09:29	319
09:30 - 09:44	255
09:45 - 09:59	317
10:00 - 10:14	312
10:15 - 10:29	308
10:30 - 10:44	366
10:45 - 10:59	320
11:00 - 11:14	304
11:15 - 11:29	317
11:30 - 11:44	366
11:45 - 11:59	342
12:00 - 12:14	329
12:15 - 12:29	363
12:30 - 12:44	375
12:45 - 12:59	354

Daily Vehicle Volume Report

Study Date: Thursday, 09/20/2018
Unit ID: 0222
Location: TAMIAMI TRAIL / W OF SW 69TH ST

	Westbound Volume
13:00 - 13:14	395
13:15 - 13:29	361
13:30 - 13:44	413
13:45 - 13:59	311
14:00 - 14:14	332
14:15 - 14:29	368
14:30 - 14:44	372
14:45 - 14:59	330
15:00 - 15:14	347
15:15 - 15:29	346
15:30 - 15:44	392
15:45 - 15:59	360
16:00 - 16:14	421
16:15 - 16:29	341
16:30 - 16:44	349
16:45 - 16:59	301
17:00 - 17:14	298
17:15 - 17:29	256
17:30 - 17:44	239
17:45 - 17:59	231
18:00 - 18:14	256
18:15 - 18:29	321
18:30 - 18:44	343
18:45 - 18:59	300
19:00 - 19:14	380
19:15 - 19:29	391
19:30 - 19:44	355
19:45 - 19:59	357
20:00 - 20:14	306
20:15 - 20:29	321
20:30 - 20:44	294
20:45 - 20:59	307
21:00 - 21:14	281
21:15 - 21:29	310
21:30 - 21:44	268
21:45 - 21:59	233
22:00 - 22:14	267
22:15 - 22:29	215
22:30 - 22:44	189
22:45 - 22:59	224
23:00 - 23:14	193
23:15 - 23:29	168
23:30 - 23:44	155
23:45 - 23:59	130
Totals	**23386**
AM Peak Time	**07:23 - 08:22**
AM Peak Volume	**1350**
PM Peak Time	**15:16 - 16:15**
PM Peak Volume	**1531**

Daily Vehicle Volume Report

Study Date: Tuesday, 09/18/2018
Unit ID: 0109
Location: SW 4TH ST W OF SW 69TH AV

	Eastbound Volume
00:00 - 00:14	1
00:15 - 00:29	1
00:30 - 00:44	3
00:45 - 00:59	1
01:00 - 01:14	0
01:15 - 01:29	2
01:30 - 01:44	2
01:45 - 01:59	0
02:00 - 02:14	1
02:15 - 02:29	1
02:30 - 02:44	0
02:45 - 02:59	0
03:00 - 03:14	2
03:15 - 03:29	1
03:30 - 03:44	0
03:45 - 03:59	2
04:00 - 04:14	1
04:15 - 04:29	1
04:30 - 04:44	1
04:45 - 04:59	4
05:00 - 05:14	2
05:15 - 05:29	6
05:30 - 05:44	7
05:45 - 05:59	6
06:00 - 06:14	19
06:15 - 06:29	25
06:30 - 06:44	30
06:45 - 06:59	33
07:00 - 07:14	55
07:15 - 07:29	67
07:30 - 07:44	73
07:45 - 07:59	73
08:00 - 08:14	102
08:15 - 08:29	94
08:30 - 08:44	105
08:45 - 08:59	108
09:00 - 09:14	114
09:15 - 09:29	107
09:30 - 09:44	74
09:45 - 09:59	72
10:00 - 10:14	53
10:15 - 10:29	67
10:30 - 10:44	53
10:45 - 10:59	57
11:00 - 11:14	45
11:15 - 11:29	52
11:30 - 11:44	62
11:45 - 11:59	63
12:00 - 12:14	57
12:15 - 12:29	60
12:30 - 12:44	73
12:45 - 12:59	64

Daily Vehicle Volume Report

Study Date: Tuesday, 09/18/2018
Unit ID: 0109
Location: SW 4TH ST W OF SW 69TH AV

	Eastbound Volume
13:00 - 13:14	68
13:15 - 13:29	65
13:30 - 13:44	51
13:45 - 13:59	54
14:00 - 14:14	69
14:15 - 14:29	44
14:30 - 14:44	59
14:45 - 14:59	57
15:00 - 15:14	49
15:15 - 15:29	61
15:30 - 15:44	66
15:45 - 15:59	69
16:00 - 16:14	80
16:15 - 16:29	75
16:30 - 16:44	64
16:45 - 16:59	76
17:00 - 17:14	76
17:15 - 17:29	69
17:30 - 17:44	66
17:45 - 17:59	66
18:00 - 18:14	66
18:15 - 18:29	45
18:30 - 18:44	50
18:45 - 18:59	51
19:00 - 19:14	44
19:15 - 19:29	48
19:30 - 19:44	31
19:45 - 19:59	33
20:00 - 20:14	40
20:15 - 20:29	23
20:30 - 20:44	37
20:45 - 20:59	24
21:00 - 21:14	20
21:15 - 21:29	30
21:30 - 21:44	18
21:45 - 21:59	20
22:00 - 22:14	12
22:15 - 22:29	11
22:30 - 22:44	13
22:45 - 22:59	8
23:00 - 23:14	10
23:15 - 23:29	8
23:30 - 23:44	3
23:45 - 23:59	6
Totals	**3837**
AM Peak Time	**08:39 - 09:38**
AM Peak Volume	**438**
PM Peak Time	**15:58 - 16:57**
PM Peak Volume	**303**

Daily Vehicle Volume Report

Study Date: Wednesday, 09/19/2018
Unit ID: 0109
Location: SW 4TH ST W OF SW 69TH AV

	Eastbound Volume
00:00 - 00:14	1
00:15 - 00:29	3
00:30 - 00:44	2
00:45 - 00:59	4
01:00 - 01:14	3
01:15 - 01:29	2
01:30 - 01:44	3
01:45 - 01:59	3
02:00 - 02:14	3
02:15 - 02:29	0
02:30 - 02:44	0
02:45 - 02:59	0
03:00 - 03:14	0
03:15 - 03:29	0
03:30 - 03:44	2
03:45 - 03:59	3
04:00 - 04:14	0
04:15 - 04:29	1
04:30 - 04:44	1
04:45 - 04:59	4
05:00 - 05:14	3
05:15 - 05:29	2
05:30 - 05:44	5
05:45 - 05:59	5
06:00 - 06:14	10
06:15 - 06:29	24
06:30 - 06:44	24
06:45 - 06:59	25
07:00 - 07:14	50
07:15 - 07:29	73
07:30 - 07:44	82
07:45 - 07:59	69
08:00 - 08:14	102
08:15 - 08:29	96
08:30 - 08:44	105
08:45 - 08:59	85
09:00 - 09:14	69
09:15 - 09:29	61
09:30 - 09:44	51
09:45 - 09:59	40
10:00 - 10:14	52
10:15 - 10:29	50
10:30 - 10:44	47
10:45 - 10:59	57
11:00 - 11:14	44
11:15 - 11:29	51
11:30 - 11:44	63
11:45 - 11:59	50
12:00 - 12:14	64
12:15 - 12:29	69
12:30 - 12:44	62
12:45 - 12:59	47

Daily Vehicle Volume Report

Study Date: Wednesday, 09/19/2018
Unit ID: 0109
Location: SW 4TH ST W OF SW 69TH AV

	Eastbound Volume
13:00 - 13:14	55
13:15 - 13:29	53
13:30 - 13:44	60
13:45 - 13:59	51
14:00 - 14:14	67
14:15 - 14:29	50
14:30 - 14:44	48
14:45 - 14:59	66
15:00 - 15:14	59
15:15 - 15:29	63
15:30 - 15:44	60
15:45 - 15:59	63
16:00 - 16:14	65
16:15 - 16:29	58
16:30 - 16:44	59
16:45 - 16:59	77
17:00 - 17:14	70
17:15 - 17:29	58
17:30 - 17:44	70
17:45 - 17:59	60
18:00 - 18:14	51
18:15 - 18:29	49
18:30 - 18:44	43
18:45 - 18:59	53
19:00 - 19:14	63
19:15 - 19:29	43
19:30 - 19:44	45
19:45 - 19:59	36
20:00 - 20:14	38
20:15 - 20:29	31
20:30 - 20:44	28
20:45 - 20:59	26
21:00 - 21:14	22
21:15 - 21:29	19
21:30 - 21:44	17
21:45 - 21:59	19
22:00 - 22:14	16
22:15 - 22:29	10
22:30 - 22:44	6
22:45 - 22:59	9
23:00 - 23:14	7
23:15 - 23:29	3
23:30 - 23:44	12
23:45 - 23:59	8
Totals	**3538**
AM Peak Time	**07:53 - 08:52**
AM Peak Volume	**391**
PM Peak Time	**16:46 - 17:45**
PM Peak Volume	**279**

Daily Vehicle Volume Report

Study Date: Thursday, 09/20/2018
Unit ID: 0109
Location: SW 4TH ST W OF SW 69TH AV

	Eastbound Volume
00:00 - 00:14	6
00:15 - 00:29	7
00:30 - 00:44	5
00:45 - 00:59	0
01:00 - 01:14	1
01:15 - 01:29	2
01:30 - 01:44	0
01:45 - 01:59	3
02:00 - 02:14	0
02:15 - 02:29	0
02:30 - 02:44	1
02:45 - 02:59	1
03:00 - 03:14	4
03:15 - 03:29	0
03:30 - 03:44	1
03:45 - 03:59	2
04:00 - 04:14	1
04:15 - 04:29	1
04:30 - 04:44	0
04:45 - 04:59	1
05:00 - 05:14	5
05:15 - 05:29	9
05:30 - 05:44	8
05:45 - 05:59	5
06:00 - 06:14	20
06:15 - 06:29	18
06:30 - 06:44	36
06:45 - 06:59	51
07:00 - 07:14	61
07:15 - 07:29	65
07:30 - 07:44	84
07:45 - 07:59	89
08:00 - 08:14	123
08:15 - 08:29	86
08:30 - 08:44	101
08:45 - 08:59	126
09:00 - 09:14	81
09:15 - 09:29	90
09:30 - 09:44	70
09:45 - 09:59	53
10:00 - 10:14	66
10:15 - 10:29	51
10:30 - 10:44	56
10:45 - 10:59	58
11:00 - 11:14	53
11:15 - 11:29	58
11:30 - 11:44	73
11:45 - 11:59	67
12:00 - 12:14	63
12:15 - 12:29	55
12:30 - 12:44	56
12:45 - 12:59	59

Daily Vehicle Volume Report

Study Date: Thursday, 09/20/2018
Unit ID: 0109
Location: SW 4TH ST W OF SW 69TH AV

	Eastbound Volume
13:00 - 13:14	68
13:15 - 13:29	75
13:30 - 13:44	60
13:45 - 13:59	57
14:00 - 14:14	52
14:15 - 14:29	48
14:30 - 14:44	62
14:45 - 14:59	69
15:00 - 15:14	58
15:15 - 15:29	61
15:30 - 15:44	68
15:45 - 15:59	67
16:00 - 16:14	67
16:15 - 16:29	64
16:30 - 16:44	70
16:45 - 16:59	77
17:00 - 17:14	64
17:15 - 17:29	62
17:30 - 17:44	62
17:45 - 17:59	64
18:00 - 18:14	55
18:15 - 18:29	70
18:30 - 18:44	64
18:45 - 18:59	54
19:00 - 19:14	53
19:15 - 19:29	34
19:30 - 19:44	33
19:45 - 19:59	41
20:00 - 20:14	30
20:15 - 20:29	48
20:30 - 20:44	36
20:45 - 20:59	21
21:00 - 21:14	14
21:15 - 21:29	19
21:30 - 21:44	15
21:45 - 21:59	19
22:00 - 22:14	13
22:15 - 22:29	17
22:30 - 22:44	14
22:45 - 22:59	11
23:00 - 23:14	10
23:15 - 23:29	9
23:30 - 23:44	5
23:45 - 23:59	7
Totals	**3899**
AM Peak Time	**08:00 - 08:59**
AM Peak Volume	**436**
PM Peak Time	**16:01 - 17:00**
PM Peak Volume	**285**

Daily Vehicle Volume Report

Study Date: Tuesday, 09/18/2018
Unit ID: 0173
Location: SW 4TH ST W OF SW 69TH AV

	Westbound Volume
00:00 - 00:14	2
00:15 - 00:29	3
00:30 - 00:44	3
00:45 - 00:59	0
01:00 - 01:14	0
01:15 - 01:29	0
01:30 - 01:44	1
01:45 - 01:59	0
02:00 - 02:14	0
02:15 - 02:29	0
02:30 - 02:44	1
02:45 - 02:59	1
03:00 - 03:14	1
03:15 - 03:29	2
03:30 - 03:44	1
03:45 - 03:59	1
04:00 - 04:14	1
04:15 - 04:29	2
04:30 - 04:44	3
04:45 - 04:59	2
05:00 - 05:14	10
05:15 - 05:29	6
05:30 - 05:44	10
05:45 - 05:59	11
06:00 - 06:14	22
06:15 - 06:29	28
06:30 - 06:44	30
06:45 - 06:59	43
07:00 - 07:14	39
07:15 - 07:29	49
07:30 - 07:44	56
07:45 - 07:59	53
08:00 - 08:14	63
08:15 - 08:29	64
08:30 - 08:44	53
08:45 - 08:59	52
09:00 - 09:14	45
09:15 - 09:29	38
09:30 - 09:44	25
09:45 - 09:59	43
10:00 - 10:14	41
10:15 - 10:29	27
10:30 - 10:44	39
10:45 - 10:59	39
11:00 - 11:14	35
11:15 - 11:29	36
11:30 - 11:44	29
11:45 - 11:59	39
12:00 - 12:14	42
12:15 - 12:29	29
12:30 - 12:44	41
12:45 - 12:59	46

Daily Vehicle Volume Report

Study Date: Tuesday, 09/18/2018
Unit ID: 0173
Location: SW 4TH ST W OF SW 69TH AV

	Westbound Volume
13:00 - 13:14	45
13:15 - 13:29	36
13:30 - 13:44	44
13:45 - 13:59	38
14:00 - 14:14	61
14:15 - 14:29	39
14:30 - 14:44	60
14:45 - 14:59	44
15:00 - 15:14	48
15:15 - 15:29	57
15:30 - 15:44	74
15:45 - 15:59	67
16:00 - 16:14	63
16:15 - 16:29	86
16:30 - 16:44	88
16:45 - 16:59	104
17:00 - 17:14	125
17:15 - 17:29	156
17:30 - 17:44	174
17:45 - 17:59	163
18:00 - 18:14	150
18:15 - 18:29	151
18:30 - 18:44	100
18:45 - 18:59	83
19:00 - 19:14	57
19:15 - 19:29	34
19:30 - 19:44	36
19:45 - 19:59	26
20:00 - 20:14	29
20:15 - 20:29	27
20:30 - 20:44	16
20:45 - 20:59	19
21:00 - 21:14	13
21:15 - 21:29	5
21:30 - 21:44	12
21:45 - 21:59	10
22:00 - 22:14	10
22:15 - 22:29	8
22:30 - 22:44	4
22:45 - 22:59	3
23:00 - 23:14	5
23:15 - 23:29	5
23:30 - 23:44	3
23:45 - 23:59	1
Totals	**3586**
AM Peak Time	**07:36 - 08:35**
AM Peak Volume	**241**
PM Peak Time	**17:23 - 18:22**
PM Peak Volume	**647**

Daily Vehicle Volume Report

Study Date: Wednesday, 09/19/2018
Unit ID: 0173
Location: SW 4TH ST W OF SW 69TH AV

	Westbound Volume
00:00 - 00:14	1
00:15 - 00:29	4
00:30 - 00:44	4
00:45 - 00:59	1
01:00 - 01:14	1
01:15 - 01:29	1
01:30 - 01:44	1
01:45 - 01:59	1
02:00 - 02:14	0
02:15 - 02:29	1
02:30 - 02:44	1
02:45 - 02:59	2
03:00 - 03:14	0
03:15 - 03:29	0
03:30 - 03:44	1
03:45 - 03:59	1
04:00 - 04:14	1
04:15 - 04:29	1
04:30 - 04:44	4
04:45 - 04:59	1
05:00 - 05:14	1
05:15 - 05:29	2
05:30 - 05:44	7
05:45 - 05:59	10
06:00 - 06:14	17
06:15 - 06:29	23
06:30 - 06:44	21
06:45 - 06:59	30
07:00 - 07:14	35
07:15 - 07:29	51
07:30 - 07:44	48
07:45 - 07:59	46
08:00 - 08:14	51
08:15 - 08:29	46
08:30 - 08:44	47
08:45 - 08:59	43
09:00 - 09:14	40
09:15 - 09:29	32
09:30 - 09:44	48
09:45 - 09:59	47
10:00 - 10:14	35
10:15 - 10:29	44
10:30 - 10:44	34
10:45 - 10:59	35
11:00 - 11:14	41
11:15 - 11:29	40
11:30 - 11:44	48
11:45 - 11:59	49
12:00 - 12:14	37
12:15 - 12:29	42
12:30 - 12:44	38
12:45 - 12:59	47

Daily Vehicle Volume Report

Study Date: Wednesday, 09/19/2018
Unit ID: 0173
Location: SW 4TH ST W OF SW 69TH AV

	Westbound Volume
13:00 - 13:14	37
13:15 - 13:29	38
13:30 - 13:44	43
13:45 - 13:59	35
14:00 - 14:14	46
14:15 - 14:29	48
14:30 - 14:44	48
14:45 - 14:59	49
15:00 - 15:14	41
15:15 - 15:29	45
15:30 - 15:44	57
15:45 - 15:59	64
16:00 - 16:14	90
16:15 - 16:29	77
16:30 - 16:44	76
16:45 - 16:59	98
17:00 - 17:14	113
17:15 - 17:29	152
17:30 - 17:44	164
17:45 - 17:59	149
18:00 - 18:14	131
18:15 - 18:29	161
18:30 - 18:44	131
18:45 - 18:59	98
19:00 - 19:14	44
19:15 - 19:29	61
19:30 - 19:44	41
19:45 - 19:59	41
20:00 - 20:14	25
20:15 - 20:29	26
20:30 - 20:44	22
20:45 - 20:59	18
21:00 - 21:14	11
21:15 - 21:29	11
21:30 - 21:44	13
21:45 - 21:59	12
22:00 - 22:14	9
22:15 - 22:29	13
22:30 - 22:44	5
22:45 - 22:59	6
23:00 - 23:14	6
23:15 - 23:29	6
23:30 - 23:44	3
23:45 - 23:59	3
Totals	**3529**
AM Peak Time	**07:17 - 08:16**
AM Peak Volume	**202**
PM Peak Time	**17:27 - 18:26**
PM Peak Volume	**621**

Daily Vehicle Volume Report

Study Date: Thursday, 09/20/2018
Unit ID: 0173
Location: SW 4TH ST W OF SW 69TH AV

	Westbound Volume
00:00 - 00:14	5
00:15 - 00:29	3
00:30 - 00:44	4
00:45 - 00:59	2
01:00 - 01:14	1
01:15 - 01:29	1
01:30 - 01:44	1
01:45 - 01:59	2
02:00 - 02:14	1
02:15 - 02:29	1
02:30 - 02:44	0
02:45 - 02:59	3
03:00 - 03:14	1
03:15 - 03:29	0
03:30 - 03:44	0
03:45 - 03:59	1
04:00 - 04:14	2
04:15 - 04:29	2
04:30 - 04:44	4
04:45 - 04:59	5
05:00 - 05:14	10
05:15 - 05:29	6
05:30 - 05:44	10
05:45 - 05:59	8
06:00 - 06:14	16
06:15 - 06:29	34
06:30 - 06:44	32
06:45 - 06:59	35
07:00 - 07:14	42
07:15 - 07:29	53
07:30 - 07:44	68
07:45 - 07:59	72
08:00 - 08:14	61
08:15 - 08:29	54
08:30 - 08:44	59
08:45 - 08:59	48
09:00 - 09:14	38
09:15 - 09:29	42
09:30 - 09:44	40
09:45 - 09:59	35
10:00 - 10:14	34
10:15 - 10:29	35
10:30 - 10:44	34
10:45 - 10:59	35
11:00 - 11:14	40
11:15 - 11:29	37
11:30 - 11:44	55
11:45 - 11:59	44
12:00 - 12:14	32
12:15 - 12:29	32
12:30 - 12:44	44
12:45 - 12:59	43

Daily Vehicle Volume Report

Study Date: Thursday, 09/20/2018
Unit ID: 0173
Location: SW 4TH ST W OF SW 69TH AV

	Westbound Volume
13:00 - 13:14	41
13:15 - 13:29	35
13:30 - 13:44	53
13:45 - 13:59	41
14:00 - 14:14	56
14:15 - 14:29	59
14:30 - 14:44	51
14:45 - 14:59	52
15:00 - 15:14	69
15:15 - 15:29	68
15:30 - 15:44	62
15:45 - 15:59	68
16:00 - 16:14	99
16:15 - 16:29	80
16:30 - 16:44	106
16:45 - 16:59	109
17:00 - 17:14	116
17:15 - 17:29	140
17:30 - 17:44	164
17:45 - 17:59	169
18:00 - 18:14	156
18:15 - 18:29	106
18:30 - 18:44	83
18:45 - 18:59	69
19:00 - 19:14	41
19:15 - 19:29	53
19:30 - 19:44	32
19:45 - 19:59	30
20:00 - 20:14	31
20:15 - 20:29	31
20:30 - 20:44	12
20:45 - 20:59	20
21:00 - 21:14	16
21:15 - 21:29	18
21:30 - 21:44	16
21:45 - 21:59	8
22:00 - 22:14	11
22:15 - 22:29	7
22:30 - 22:44	13
22:45 - 22:59	3
23:00 - 23:14	10
23:15 - 23:29	5
23:30 - 23:44	7
23:45 - 23:59	7
Totals	**3690**
AM Peak Time	**07:13 - 08:12**
AM Peak Volume	**260**
PM Peak Time	**17:14 - 18:13**
PM Peak Volume	**630**

Daily Vehicle Volume Report

Study Date: Tuesday, 09/18/2018
Unit ID: 0190
Location: W FLAGLER ST / W OF NW 69TH AVE

	Eastbound Volume
00:00 - 00:14	65
00:15 - 00:29	61
00:30 - 00:44	64
00:45 - 00:59	39
01:00 - 01:14	31
01:15 - 01:29	31
01:30 - 01:44	39
01:45 - 01:59	35
02:00 - 02:14	19
02:15 - 02:29	20
02:30 - 02:44	16
02:45 - 02:59	19
03:00 - 03:14	22
03:15 - 03:29	24
03:30 - 03:44	42
03:45 - 03:59	13
04:00 - 04:14	27
04:15 - 04:29	24
04:30 - 04:44	42
04:45 - 04:59	55
05:00 - 05:14	64
05:15 - 05:29	87
05:30 - 05:44	133
05:45 - 05:59	158
06:00 - 06:14	170
06:15 - 06:29	271
06:30 - 06:44	295
06:45 - 06:59	334
07:00 - 07:14	352
07:15 - 07:29	429
07:30 - 07:44	394
07:45 - 07:59	363
08:00 - 08:14	445
08:15 - 08:29	418
08:30 - 08:44	418
08:45 - 08:59	424
09:00 - 09:14	381
09:15 - 09:29	402
09:30 - 09:44	415
09:45 - 09:59	347
10:00 - 10:14	373
10:15 - 10:29	360
10:30 - 10:44	310
10:45 - 10:59	385
11:00 - 11:14	312
11:15 - 11:29	303
11:30 - 11:44	342
11:45 - 11:59	345
12:00 - 12:14	344
12:15 - 12:29	317
12:30 - 12:44	324
12:45 - 12:59	340

Daily Vehicle Volume Report

Study Date: Tuesday, 09/18/2018
Unit ID: 0190
Location: W FLAGLER ST / W OF NW 69TH AVE

	Eastbound Volume
13:00 - 13:14	363
13:15 - 13:29	320
13:30 - 13:44	363
13:45 - 13:59	315
14:00 - 14:14	285
14:15 - 14:29	322
14:30 - 14:44	304
14:45 - 14:59	329
15:00 - 15:14	334
15:15 - 15:29	328
15:30 - 15:44	364
15:45 - 15:59	387
16:00 - 16:14	344
16:15 - 16:29	405
16:30 - 16:44	381
16:45 - 16:59	377
17:00 - 17:14	427
17:15 - 17:29	405
17:30 - 17:44	409
17:45 - 17:59	409
18:00 - 18:14	372
18:15 - 18:29	331
18:30 - 18:44	319
18:45 - 18:59	367
19:00 - 19:14	275
19:15 - 19:29	295
19:30 - 19:44	307
19:45 - 19:59	296
20:00 - 20:14	283
20:15 - 20:29	291
20:30 - 20:44	272
20:45 - 20:59	221
21:00 - 21:14	231
21:15 - 21:29	234
21:30 - 21:44	216
21:45 - 21:59	204
22:00 - 22:14	178
22:15 - 22:29	199
22:30 - 22:44	168
22:45 - 22:59	116
23:00 - 23:14	95
23:15 - 23:29	93
23:30 - 23:44	84
23:45 - 23:59	75
Totals	**23736**
AM Peak Time	**08:00 - 08:59**
AM Peak Volume	**1705**
PM Peak Time	**16:58 - 17:57**
PM Peak Volume	**1655**

Daily Vehicle Volume Report

Study Date: Wednesday, 09/19/2018
Unit ID: 0190
Location: W FLAGLER ST / W OF NW 69TH AVE

	Eastbound Volume
00:00 - 00:14	76
00:15 - 00:29	54
00:30 - 00:44	38
00:45 - 00:59	47
01:00 - 01:14	34
01:15 - 01:29	27
01:30 - 01:44	33
01:45 - 01:59	29
02:00 - 02:14	21
02:15 - 02:29	28
02:30 - 02:44	15
02:45 - 02:59	21
03:00 - 03:14	24
03:15 - 03:29	31
03:30 - 03:44	27
03:45 - 03:59	23
04:00 - 04:14	29
04:15 - 04:29	37
04:30 - 04:44	52
04:45 - 04:59	46
05:00 - 05:14	53
05:15 - 05:29	75
05:30 - 05:44	115
05:45 - 05:59	143
06:00 - 06:14	184
06:15 - 06:29	266
06:30 - 06:44	273
06:45 - 06:59	294
07:00 - 07:14	342
07:15 - 07:29	346
07:30 - 07:44	385
07:45 - 07:59	417
08:00 - 08:14	389
08:15 - 08:29	416
08:30 - 08:44	411
08:45 - 08:59	411
09:00 - 09:14	365
09:15 - 09:29	349
09:30 - 09:44	329
09:45 - 09:59	368
10:00 - 10:14	339
10:15 - 10:29	349
10:30 - 10:44	329
10:45 - 10:59	363
11:00 - 11:14	319
11:15 - 11:29	327
11:30 - 11:44	342
11:45 - 11:59	313
12:00 - 12:14	324
12:15 - 12:29	338
12:30 - 12:44	327
12:45 - 12:59	366

Daily Vehicle Volume Report

Study Date: Wednesday, 09/19/2018
Unit ID: 0190
Location: W FLAGLER ST / W OF NW 69TH AVE

	Eastbound Volume
13:00 - 13:14	294
13:15 - 13:29	357
13:30 - 13:44	328
13:45 - 13:59	348
14:00 - 14:14	358
14:15 - 14:29	373
14:30 - 14:44	350
14:45 - 14:59	366
15:00 - 15:14	354
15:15 - 15:29	346
15:30 - 15:44	346
15:45 - 15:59	367
16:00 - 16:14	368
16:15 - 16:29	411
16:30 - 16:44	366
16:45 - 16:59	402
17:00 - 17:14	416
17:15 - 17:29	463
17:30 - 17:44	418
17:45 - 17:59	396
18:00 - 18:14	438
18:15 - 18:29	379
18:30 - 18:44	371
18:45 - 18:59	358
19:00 - 19:14	352
19:15 - 19:29	311
19:30 - 19:44	288
19:45 - 19:59	300
20:00 - 20:14	286
20:15 - 20:29	252
20:30 - 20:44	249
20:45 - 20:59	255
21:00 - 21:14	226
21:15 - 21:29	209
21:30 - 21:44	226
21:45 - 21:59	213
22:00 - 22:14	173
22:15 - 22:29	189
22:30 - 22:44	154
22:45 - 22:59	138
23:00 - 23:14	133
23:15 - 23:29	113
23:30 - 23:44	82
23:45 - 23:59	79
Totals	**23860**
AM Peak Time	**07:49 - 08:48**
AM Peak Volume	**1640**
PM Peak Time	**17:15 - 18:14**
PM Peak Volume	**1715**

Daily Vehicle Volume Report

Study Date: Thursday, 09/20/2018
Unit ID: 0190
Location: W FLAGLER ST / W OF NW 69TH AVE

	Eastbound Volume
00:00 - 00:14	65
00:15 - 00:29	40
00:30 - 00:44	59
00:45 - 00:59	44
01:00 - 01:14	30
01:15 - 01:29	29
01:30 - 01:44	35
01:45 - 01:59	34
02:00 - 02:14	19
02:15 - 02:29	19
02:30 - 02:44	20
02:45 - 02:59	12
03:00 - 03:14	26
03:15 - 03:29	26
03:30 - 03:44	21
03:45 - 03:59	20
04:00 - 04:14	31
04:15 - 04:29	37
04:30 - 04:44	47
04:45 - 04:59	69
05:00 - 05:14	62
05:15 - 05:29	102
05:30 - 05:44	129
05:45 - 05:59	148
06:00 - 06:14	161
06:15 - 06:29	276
06:30 - 06:44	300
06:45 - 06:59	316
07:00 - 07:14	336
07:15 - 07:29	379
07:30 - 07:44	357
07:45 - 07:59	408
08:00 - 08:14	410
08:15 - 08:29	408
08:30 - 08:44	415
08:45 - 08:59	408
09:00 - 09:14	437
09:15 - 09:29	398
09:30 - 09:44	346
09:45 - 09:59	341
10:00 - 10:14	352
10:15 - 10:29	343
10:30 - 10:44	337
10:45 - 10:59	342
11:00 - 11:14	308
11:15 - 11:29	358
11:30 - 11:44	316
11:45 - 11:59	326
12:00 - 12:14	298
12:15 - 12:29	352
12:30 - 12:44	310
12:45 - 12:59	326

Daily Vehicle Volume Report

Study Date: Thursday, 09/20/2018
Unit ID: 0190
Location: W FLAGLER ST / W OF NW 69TH AVE

	Eastbound Volume
13:00 - 13:14	300
13:15 - 13:29	358
13:30 - 13:44	346
13:45 - 13:59	325
14:00 - 14:14	325
14:15 - 14:29	325
14:30 - 14:44	319
14:45 - 14:59	334
15:00 - 15:14	327
15:15 - 15:29	354
15:30 - 15:44	361
15:45 - 15:59	360
16:00 - 16:14	376
16:15 - 16:29	371
16:30 - 16:44	364
16:45 - 16:59	389
17:00 - 17:14	390
17:15 - 17:29	421
17:30 - 17:44	405
17:45 - 17:59	371
18:00 - 18:14	395
18:15 - 18:29	381
18:30 - 18:44	377
18:45 - 18:59	349
19:00 - 19:14	337
19:15 - 19:29	319
19:30 - 19:44	318
19:45 - 19:59	272
20:00 - 20:14	261
20:15 - 20:29	260
20:30 - 20:44	245
20:45 - 20:59	235
21:00 - 21:14	259
21:15 - 21:29	241
21:30 - 21:44	232
21:45 - 21:59	200
22:00 - 22:14	209
22:15 - 22:29	225
22:30 - 22:44	177
22:45 - 22:59	153
23:00 - 23:14	114
23:15 - 23:29	144
23:30 - 23:44	107
23:45 - 23:59	102
Totals	**23821**
AM Peak Time	**08:20 - 09:19**
AM Peak Volume	**1689**
PM Peak Time	**17:07 - 18:06**
PM Peak Volume	**1617**

Daily Vehicle Volume Report

Study Date: Tuesday, 09/18/2018
Unit ID: 0082
Location: W FLAGLER ST / W OF NW 69TH AVE

	Westbound Volume
00:00 - 00:14	73
00:15 - 00:29	59
00:30 - 00:44	49
00:45 - 00:59	43
01:00 - 01:14	25
01:15 - 01:29	38
01:30 - 01:44	35
01:45 - 01:59	27
02:00 - 02:14	19
02:15 - 02:29	17
02:30 - 02:44	19
02:45 - 02:59	22
03:00 - 03:14	14
03:15 - 03:29	23
03:30 - 03:44	33
03:45 - 03:59	27
04:00 - 04:14	31
04:15 - 04:29	33
04:30 - 04:44	76
04:45 - 04:59	59
05:00 - 05:14	69
05:15 - 05:29	112
05:30 - 05:44	138
05:45 - 05:59	184
06:00 - 06:14	189
06:15 - 06:29	238
06:30 - 06:44	335
06:45 - 06:59	308
07:00 - 07:14	319
07:15 - 07:29	337
07:30 - 07:44	389
07:45 - 07:59	391
08:00 - 08:14	351
08:15 - 08:29	395
08:30 - 08:44	346
08:45 - 08:59	358
09:00 - 09:14	304
09:15 - 09:29	310
09:30 - 09:44	311
09:45 - 09:59	318
10:00 - 10:14	299
10:15 - 10:29	298
10:30 - 10:44	357
10:45 - 10:59	340
11:00 - 11:14	355
11:15 - 11:29	301
11:30 - 11:44	372
11:45 - 11:59	300
12:00 - 12:14	324
12:15 - 12:29	348
12:30 - 12:44	326
12:45 - 12:59	348

Daily Vehicle Volume Report

Study Date: Tuesday, 09/18/2018
Unit ID: 0082
Location: W FLAGLER ST / W OF NW 69TH AVE

	Westbound Volume
13:00 - 13:14	347
13:15 - 13:29	347
13:30 - 13:44	360
13:45 - 13:59	325
14:00 - 14:14	374
14:15 - 14:29	393
14:30 - 14:44	366
14:45 - 14:59	349
15:00 - 15:14	313
15:15 - 15:29	365
15:30 - 15:44	415
15:45 - 15:59	407
16:00 - 16:14	454
16:15 - 16:29	452
16:30 - 16:44	463
16:45 - 16:59	442
17:00 - 17:14	420
17:15 - 17:29	399
17:30 - 17:44	416
17:45 - 17:59	415
18:00 - 18:14	440
18:15 - 18:29	424
18:30 - 18:44	398
18:45 - 18:59	369
19:00 - 19:14	346
19:15 - 19:29	373
19:30 - 19:44	319
19:45 - 19:59	300
20:00 - 20:14	303
20:15 - 20:29	256
20:30 - 20:44	274
20:45 - 20:59	227
21:00 - 21:14	210
21:15 - 21:29	218
21:30 - 21:44	203
21:45 - 21:59	156
22:00 - 22:14	201
22:15 - 22:29	158
22:30 - 22:44	152
22:45 - 22:59	128
23:00 - 23:14	108
23:15 - 23:29	99
23:30 - 23:44	105
23:45 - 23:59	70
Totals	**24051**
AM Peak Time	**07:26 - 08:25**
AM Peak Volume	**1546**
PM Peak Time	**16:05 - 17:04**
PM Peak Volume	**1825**

Daily Vehicle Volume Report

Study Date: Wednesday, 09/19/2018
Unit ID: 0082
Location: W FLAGLER ST / W OF NW 69TH AVE

	Westbound Volume
00:00 - 00:14	54
00:15 - 00:29	76
00:30 - 00:44	55
00:45 - 00:59	38
01:00 - 01:14	35
01:15 - 01:29	27
01:30 - 01:44	32
01:45 - 01:59	23
02:00 - 02:14	28
02:15 - 02:29	20
02:30 - 02:44	29
02:45 - 02:59	22
03:00 - 03:14	17
03:15 - 03:29	25
03:30 - 03:44	38
03:45 - 03:59	38
04:00 - 04:14	36
04:15 - 04:29	47
04:30 - 04:44	59
04:45 - 04:59	74
05:00 - 05:14	69
05:15 - 05:29	97
05:30 - 05:44	152
05:45 - 05:59	173
06:00 - 06:14	188
06:15 - 06:29	234
06:30 - 06:44	333
06:45 - 06:59	314
07:00 - 07:14	321
07:15 - 07:29	315
07:30 - 07:44	401
07:45 - 07:59	374
08:00 - 08:14	387
08:15 - 08:29	366
08:30 - 08:44	369
08:45 - 08:59	349
09:00 - 09:14	335
09:15 - 09:29	287
09:30 - 09:44	289
09:45 - 09:59	303
10:00 - 10:14	295
10:15 - 10:29	297
10:30 - 10:44	322
10:45 - 10:59	342
11:00 - 11:14	321
11:15 - 11:29	268
11:30 - 11:44	311
11:45 - 11:59	296
12:00 - 12:14	335
12:15 - 12:29	349
12:30 - 12:44	323
12:45 - 12:59	355

Daily Vehicle Volume Report

Study Date: Wednesday, 09/19/2018
Unit ID: 0082
Location: W FLAGLER ST / W OF NW 69TH AVE

	Westbound Volume
13:00 - 13:14	331
13:15 - 13:29	354
13:30 - 13:44	355
13:45 - 13:59	334
14:00 - 14:14	344
14:15 - 14:29	368
14:30 - 14:44	348
14:45 - 14:59	364
15:00 - 15:14	353
15:15 - 15:29	399
15:30 - 15:44	411
15:45 - 15:59	423
16:00 - 16:14	421
16:15 - 16:29	433
16:30 - 16:44	469
16:45 - 16:59	437
17:00 - 17:14	446
17:15 - 17:29	426
17:30 - 17:44	400
17:45 - 17:59	418
18:00 - 18:14	438
18:15 - 18:29	445
18:30 - 18:44	389
18:45 - 18:59	389
19:00 - 19:14	371
19:15 - 19:29	389
19:30 - 19:44	363
19:45 - 19:59	307
20:00 - 20:14	295
20:15 - 20:29	274
20:30 - 20:44	257
20:45 - 20:59	222
21:00 - 21:14	230
21:15 - 21:29	214
21:30 - 21:44	225
21:45 - 21:59	163
22:00 - 22:14	194
22:15 - 22:29	155
22:30 - 22:44	116
22:45 - 22:59	123
23:00 - 23:14	119
23:15 - 23:29	92
23:30 - 23:44	80
23:45 - 23:59	78
Totals	**24005**
AM Peak Time	**07:30 - 08:29**
AM Peak Volume	**1528**
PM Peak Time	**16:23 - 17:22**
PM Peak Volume	**1794**

Daily Vehicle Volume Report

Study Date: Thursday, 09/20/2018
Unit ID: 0082
Location: W FLAGLER ST / W OF NW 69TH AVE

	Westbound Volume
00:00 - 00:14	73
00:15 - 00:29	66
00:30 - 00:44	38
00:45 - 00:59	38
01:00 - 01:14	38
01:15 - 01:29	31
01:30 - 01:44	32
01:45 - 01:59	42
02:00 - 02:14	27
02:15 - 02:29	30
02:30 - 02:44	13
02:45 - 02:59	31
03:00 - 03:14	22
03:15 - 03:29	21
03:30 - 03:44	35
03:45 - 03:59	33
04:00 - 04:14	35
04:15 - 04:29	42
04:30 - 04:44	61
04:45 - 04:59	55
05:00 - 05:14	81
05:15 - 05:29	114
05:30 - 05:44	136
05:45 - 05:59	180
06:00 - 06:14	196
06:15 - 06:29	252
06:30 - 06:44	308
06:45 - 06:59	287
07:00 - 07:14	296
07:15 - 07:29	312
07:30 - 07:44	414
07:45 - 07:59	369
08:00 - 08:14	340
08:15 - 08:29	352
08:30 - 08:44	372
08:45 - 08:59	344
09:00 - 09:14	303
09:15 - 09:29	283
09:30 - 09:44	307
09:45 - 09:59	297
10:00 - 10:14	299
10:15 - 10:29	286
10:30 - 10:44	328
10:45 - 10:59	320
11:00 - 11:14	340
11:15 - 11:29	319
11:30 - 11:44	313
11:45 - 11:59	310
12:00 - 12:14	314
12:15 - 12:29	355
12:30 - 12:44	327
12:45 - 12:59	316

Daily Vehicle Volume Report

Study Date: Thursday, 09/20/2018
Unit ID: 0082
Location: W FLAGLER ST / W OF NW 69TH AVE

	Westbound Volume
13:00 - 13:14	388
13:15 - 13:29	361
13:30 - 13:44	387
13:45 - 13:59	327
14:00 - 14:14	339
14:15 - 14:29	386
14:30 - 14:44	405
14:45 - 14:59	367
15:00 - 15:14	344
15:15 - 15:29	373
15:30 - 15:44	395
15:45 - 15:59	420
16:00 - 16:14	440
16:15 - 16:29	469
16:30 - 16:44	497
16:45 - 16:59	402
17:00 - 17:14	467
17:15 - 17:29	449
17:30 - 17:44	427
17:45 - 17:59	413
18:00 - 18:14	435
18:15 - 18:29	395
18:30 - 18:44	389
18:45 - 18:59	384
19:00 - 19:14	412
19:15 - 19:29	357
19:30 - 19:44	323
19:45 - 19:59	323
20:00 - 20:14	318
20:15 - 20:29	260
20:30 - 20:44	263
20:45 - 20:59	231
21:00 - 21:14	217
21:15 - 21:29	216
21:30 - 21:44	187
21:45 - 21:59	167
22:00 - 22:14	171
22:15 - 22:29	161
22:30 - 22:44	144
22:45 - 22:59	127
23:00 - 23:14	115
23:15 - 23:29	126
23:30 - 23:44	141
23:45 - 23:59	127
Totals	**24178**
AM Peak Time	**07:23 - 08:22**
AM Peak Volume	**1477**
PM Peak Time	**15:55 - 16:54**
PM Peak Volume	**1855**

FTO Station Data

FLORIDA DEPARTMENT OF TRANSPORTATION
TRANSPORTATION STATISTICS OFFICE
2017 HISTORICAL AADT REPORT

COUNTY: 87 - MIAMI-DADE

SITE: 1139 - SR 968/FLAGLER ST, 200' E SW/NW 72 AV

YEAR	AADT	DIRECTION 1	DIRECTION 2	*K FACTOR	D FACTOR	T FACTOR
2017	43000 C	E 22500	W 20500	9.00	55.70	5.70
2016	47000 C	E 24500	W 22500	9.00	56.10	3.50
2015	45000 C	E 21500	W 23500	9.00	57.40	5.50
2014	44500 C	E 21500	W 23000	9.00	59.30	5.90
2013	47000 C	E 23000	W 24000	9.00	58.90	3.60
2012	43000 C	E 20000	W 23000	9.00	59.70	4.30
2011	43500 C	E 22500	W 21000	9.00	58.20	4.00
2010	45000 C	E 22000	W 23000	7.87	58.27	4.00
2009	45000 C	E 22500	W 22500	7.98	59.96	6.00
2008	47500 C	E 24000	W 23500	8.07	66.31	7.80
2007	50500 C	E 25500	W 25000	7.90	63.12	8.50
2006	52500 C	E 26500	W 26000	7.39	58.66	12.20
2005	52000 C	E 26500	W 25500	7.70	65.70	3.80
2004	52000 C	E 26500	W 25500	8.20	67.10	3.80
2003	46000 C	E 23500	W 22500	8.10	72.30	7.60
2002	47500 C	E 23000	W 24500	9.20	68.00	2.60

AADT FLAGS: C = COMPUTED; E = MANUAL ESTIMATE; F = FIRST YEAR ESTIMATE
S = SECOND YEAR ESTIMATE; T = THIRD YEAR ESTIMATE; R = FOURTH YEAR ESTIMATE
V = FIFTH YEAR ESTIMATE; 6 = SIXTH YEAR ESTIMATE; X = UNKNOWN
*K FACTOR: STARTING WITH YEAR 2011 IS STANDARDK, PRIOR YEARS ARE K30 VALUES

FLORIDA DEPARTMENT OF TRANSPORTATION
TRANSPORTATION STATISTICS OFFICE
2017 HISTORICAL AADT REPORT

COUNTY: 87 - MIAMI-DADE

SITE: 8138 - SW 72ND AVE, 200' SOUTH OF SW 40TH STREET

YEAR	AADT	DIRECTION 1	DIRECTION 2	*K FACTOR	D FACTOR	T FACTOR
2017	12700 C	N 6900	S 5800	9.00	59.30	12.60
2016	13700 F	N 6400	S 7300	9.00	56.10	13.50
2015	13900 C	N 6500	S 7400	9.00	57.40	13.70
2014	11500 S	N 5600	S 5900	9.00	59.30	17.40
2013	11500 F	N 5600	S 5900	9.00	58.90	16.20
2012	11500 C	N 5600	S 5900	9.00	59.70	16.00

AADT FLAGS: C = COMPUTED; E = MANUAL ESTIMATE; F = FIRST YEAR ESTIMATE
S = SECOND YEAR ESTIMATE; T = THIRD YEAR ESTIMATE; R = FOURTH YEAR ESTIMATE
V = FIFTH YEAR ESTIMATE; 6 = SIXTH YEAR ESTIMATE; X = UNKNOWN
*K FACTOR: STARTING WITH YEAR 2011 IS STANDARDK, PRIOR YEARS ARE K30 VALUES

FLORIDA DEPARTMENT OF TRANSPORTATION
TRANSPORTATION STATISTICS OFFICE
2017 HISTORICAL AADT REPORT

COUNTY: 87 - MIAMI-DADE

SITE: 8186 - SW 72ND AVE, 200' SOUTH OF SW 72ND STREET

YEAR	AADT	DIRECTION 1	DIRECTION 2	*K FACTOR	D FACTOR	T FACTOR
2017	11000 S	N 5400	S 5600	9.00	59.30	12.60
2016	11200 F	N 5500	S 5700	9.00	56.10	13.50
2015	11400 C	N 5600	S 5800	9.00	57.40	13.70
2014	11400 S	N 5600	S 5800	9.00	59.30	17.40
2013	11400 F	N 5600	S 5800	9.00	58.90	16.20
2012	11400 C	N 5600	S 5800	9.00	59.70	16.00

AADT FLAGS: C = COMPUTED; E = MANUAL ESTIMATE; F = FIRST YEAR ESTIMATE
S = SECOND YEAR ESTIMATE; T = THIRD YEAR ESTIMATE; R = FOURTH YEAR ESTIMATE
V = FIFTH YEAR ESTIMATE; 6 = SIXTH YEAR ESTIMATE; X = UNKNOWN
*K FACTOR: STARTING WITH YEAR 2011 IS STANDARDK, PRIOR YEARS ARE K30 VALUES

FLORIDA DEPARTMENT OF TRANSPORTATION
TRANSPORTATION STATISTICS OFFICE
2017 HISTORICAL AADT REPORT

COUNTY: 87 - MIAMI-DADE

SITE: 8187 - SW 72ND AVE, 200' SOUTH OF SW 56TH STREET

YEAR	AADT	DIRECTION 1	DIRECTION 2	*K FACTOR	D FACTOR	T FACTOR
2017	9000 S	N 4500	S 4500	9.00	59.30	12.60
2016	9200 F	N 4600	S 4600	9.00	56.10	13.50
2015	9400 C	N 4700	S 4700	9.00	57.40	13.70
2014	10700 S	N 5700	S 5000	9.00	59.30	17.40
2013	10700 F	N 5700	S 5000	9.00	58.90	16.20
2012	10700 C	N 5700	S 5000	9.00	59.70	16.00

AADT FLAGS: C = COMPUTED; E = MANUAL ESTIMATE; F = FIRST YEAR ESTIMATE
S = SECOND YEAR ESTIMATE; T = THIRD YEAR ESTIMATE; R = FOURTH YEAR ESTIMATE
V = FIFTH YEAR ESTIMATE; 6 = SIXTH YEAR ESTIMATE; X = UNKNOWN
*K FACTOR: STARTING WITH YEAR 2011 IS STANDARDK, PRIOR YEARS ARE K30 VALUES

FLORIDA DEPARTMENT OF TRANSPORTATION
TRANSPORTATION STATISTICS OFFICE
2017 HISTORICAL AADT REPORT

COUNTY: 87 - MIAMI-DADE

SITE: 8279 - SW 56TH ST, 200' WEST OF SW 69TH AVENUE

YEAR	AADT	DIRECTION 1	DIRECTION 2	*K FACTOR	D FACTOR	T FACTOR
2017	22500 F	E 11000	W 11500	9.00	55.70	12.60
2016	22500 C	E 11000	W 11500	9.00	56.10	13.50
2015	18000 T	E 8900	W 9100	9.00	57.40	13.70
2014	18200 S	E 9000	W 9200	9.00	59.30	17.40
2013	18400 F	E 9100	W 9300	9.00	58.90	16.20
2012	18400 C	E 9100	W 9300	9.00	59.70	16.00

AADT FLAGS: C = COMPUTED; E = MANUAL ESTIMATE; F = FIRST YEAR ESTIMATE
S = SECOND YEAR ESTIMATE; T = THIRD YEAR ESTIMATE; R = FOURTH YEAR ESTIMATE
V = FIFTH YEAR ESTIMATE; 6 = SIXTH YEAR ESTIMATE; X = UNKNOWN
*K FACTOR: STARTING WITH YEAR 2011 IS STANDARDK, PRIOR YEARS ARE K30 VALUES

FLORIDA DEPARTMENT OF TRANSPORTATION
TRANSPORTATION STATISTICS OFFICE
2017 HISTORICAL AADT REPORT

COUNTY: 87 - MIAMI-DADE

SITE: 8304 - SW 67TH AVE, 200' SOUTH OF SW 40TH STREET

YEAR	AADT	DIRECTION 1	DIRECTION 2	*K FACTOR	D FACTOR	T FACTOR
2017	15700 F	N 7400	S 8300	9.00	55.70	12.60
2016	15900 C	N 7500	S 8400	9.00	56.10	13.50
2015	14300 T	N 6700	S 7600	9.00	57.40	13.70
2014	14500 S	N 6800	S 7700	9.00	59.30	17.40
2013	14600 F	N 6800	S 7800	9.00	58.90	16.20
2012	14600 C	N 6800	S 7800	9.00	59.70	16.00

AADT FLAGS: C = COMPUTED; E = MANUAL ESTIMATE; F = FIRST YEAR ESTIMATE
S = SECOND YEAR ESTIMATE; T = THIRD YEAR ESTIMATE; R = FOURTH YEAR ESTIMATE
V = FIFTH YEAR ESTIMATE; 6 = SIXTH YEAR ESTIMATE; X = UNKNOWN
*K FACTOR: STARTING WITH YEAR 2011 IS STANDARDK, PRIOR YEARS ARE K30 VALUES

FLORIDA DEPARTMENT OF TRANSPORTATION
TRANSPORTATION STATISTICS OFFICE
2017 HISTORICAL AADT REPORT

COUNTY: 87 - MIAMI-DADE

SITE: 8305 - SW 67TH AVE, 200' SOUTH OF NW 24TH STREET

YEAR	AADT	DIRECTION 1	DIRECTION 2	*K FACTOR	D FACTOR	T FACTOR
2017	17500 F	N 8700	S 8800	9.00	55.70	12.60
2016	17700 C	N 8800	S 8900	9.00	56.10	13.50
2015	17600 T	N 9300	S 8300	9.00	57.40	13.70
2014	17800 S	N 9400	S 8400	9.00	59.30	17.40
2013	18000 F	N 9500	S 8500	9.00	58.90	16.20
2012	18000 C	N 9500	S 8500	9.00	59.70	16.00

AADT FLAGS: C = COMPUTED; E = MANUAL ESTIMATE; F = FIRST YEAR ESTIMATE
S = SECOND YEAR ESTIMATE; T = THIRD YEAR ESTIMATE; R = FOURTH YEAR ESTIMATE
V = FIFTH YEAR ESTIMATE; 6 = SIXTH YEAR ESTIMATE; X = UNKNOWN
*K FACTOR: STARTING WITH YEAR 2011 IS STANDARDK, PRIOR YEARS ARE K30 VALUES

FLORIDA DEPARTMENT OF TRANSPORTATION
TRANSPORTATION STATISTICS OFFICE
2017 HISTORICAL AADT REPORT

COUNTY: 87 - MIAMI-DADE

SITE: 8306 - SW 67TH AVE, 200' SOUTH OF NW 8TH STREET

YEAR	AADT	DIRECTION 1	DIRECTION 2	*K FACTOR	D FACTOR	T FACTOR
2017	11100 F	N 5300	S 5800	9.00	55.70	12.60
2016	11300 C	N 5400	S 5900	9.00	56.10	13.50
2015	11000 T	N 5500	S 5500	9.00	57.40	13.70
2014	11200 S	N 5600	S 5600	9.00	59.30	17.40
2013	11200 F	N 5600	S 5600	9.00	58.90	16.20
2012	11200 C	N 5600	S 5600	9.00	59.70	16.00

AADT FLAGS: C = COMPUTED; E = MANUAL ESTIMATE; F = FIRST YEAR ESTIMATE
S = SECOND YEAR ESTIMATE; T = THIRD YEAR ESTIMATE; R = FOURTH YEAR ESTIMATE
V = FIFTH YEAR ESTIMATE; 6 = SIXTH YEAR ESTIMATE; X = UNKNOWN
*K FACTOR: STARTING WITH YEAR 2011 IS STANDARDK, PRIOR YEARS ARE K30 VALUES

FLORIDA DEPARTMENT OF TRANSPORTATION
TRANSPORTATION STATISTICS OFFICE
2017 HISTORICAL AADT REPORT

COUNTY: 87 - MIAMI-DADE

SITE: 8307 - SW 67TH AVE, 200' SOUTH OF FLAGLER STREET

YEAR	AADT	DIRECTION 1	DIRECTION 2	*K FACTOR	D FACTOR	T FACTOR
2017	11200 F	N 5500	S 5700	9.00	55.70	12.60
2016	11400 C	N 5600	S 5800	9.00	56.10	13.50
2015	10300 T	N 4600	S 5700	9.00	57.40	13.70
2014	10500 S	N 4700	S 5800	9.00	59.30	17.40
2013	10500 F	N 4700	S 5800	9.00	58.90	16.20
2012	10500 C	N 4700	S 5800	9.00	59.70	16.00

AADT FLAGS: C = COMPUTED; E = MANUAL ESTIMATE; F = FIRST YEAR ESTIMATE
S = SECOND YEAR ESTIMATE; T = THIRD YEAR ESTIMATE; R = FOURTH YEAR ESTIMATE
V = FIFTH YEAR ESTIMATE; 6 = SIXTH YEAR ESTIMATE; X = UNKNOWN
*K FACTOR: STARTING WITH YEAR 2011 IS STANDARDK, PRIOR YEARS ARE K30 VALUES

FLORIDA DEPARTMENT OF TRANSPORTATION
TRANSPORTATION STATISTICS OFFICE
2017 HISTORICAL AADT REPORT

COUNTY: 87 - MIAMI-DADE

SITE: 8308 - SW 67TH AVE, 200' SOUTH OF NW 72ND STREET

YEAR	AADT	DIRECTION 1	DIRECTION 2	*K FACTOR	D FACTOR	T FACTOR
2017	10500 C	N 5500	S 5000	9.00	55.70	2.70
2016	9900 T	N 4800	S 5100	9.00	56.10	3.30
2015	10100 S	N 4900	S 5200	9.00	57.40	5.30
2014	10300 F	N 5000	S 5300	9.00	59.30	7.50
2013	10300 C	N 5000	S 5300	9.00	58.90	16.20
2012	11800 F	N 5900	S 5900	9.00	59.70	16.00
2011	11800 C	N 5900	S 5900	9.00	58.20	14.70

AADT FLAGS: C = COMPUTED; E = MANUAL ESTIMATE; F = FIRST YEAR ESTIMATE
S = SECOND YEAR ESTIMATE; T = THIRD YEAR ESTIMATE; R = FOURTH YEAR ESTIMATE
V = FIFTH YEAR ESTIMATE; 6 = SIXTH YEAR ESTIMATE; X = UNKNOWN
*K FACTOR: STARTING WITH YEAR 2011 IS STANDARDK, PRIOR YEARS ARE K30 VALUES

Turning Movement Counts

W Flagler Street & W 69th Avenue

File Name : TMC-1 W Flagler Street & W 69th Avenue
Site Code : 00000000
Start Date : 9/20/2018
Page No : 1

Groups Printed- Vehicle - Trucks

	W 69th Avenue Southbound					W 69th Avenue Northbound					W Flagler Street Westbound					W Flagler Street Eastbound					
Start Time	U-Turns	Left	Thru	Right	App. Total	U-Turns	Left	Thru	Right	App. Total	U-Turns	Left	Thru	Right	App. Total	U-Turns	Left	Thru	Right	App. Total	Int. Total
06:00 AM	0	1	8	10	19	0	3	9	2	14	0	1	184	0	185	0	1	178	3	182	400
06:15 AM	0	0	7	25	32	0	11	4	5	20	0	8	216	0	224	0	10	262	1	273	549
06:30 AM	0	1	6	22	29	0	11	10	3	24	0	5	250	1	256	0	2	304	4	310	619
06:45 AM	0	0	9	29	38	0	21	9	2	32	0	3	254	0	257	0	2	314	2	318	645
Total	0	2	30	86	118	0	46	32	12	90	0	17	904	1	922	0	15	1058	10	1083	2213
07:00 AM	0	1	2	30	33	0	17	18	3	38	0	7	253	2	262	0	2	340	10	352	685
07:15 AM	0	2	8	29	39	0	11	18	6	35	0	3	289	0	292	0	1	397	7	405	771
07:30 AM	0	0	11	43	54	0	21	20	3	44	0	3	341	0	344	0	1	397	15	413	855
07:45 AM	0	0	6	33	39	0	34	22	2	58	0	3	301	1	305	0	4	384	18	406	808
Total	0	3	27	135	165	0	83	78	14	175	0	16	1184	3	1203	0	8	1518	50	1576	3119
08:00 AM	0	3	7	35	45	0	28	22	4	54	0	9	295	2	306	0	5	391	22	418	823
08:15 AM	0	0	4	33	37	0	22	17	3	42	0	15	301	0	316	0	2	351	21	374	769
08:30 AM	0	0	7	40	47	0	23	25	7	55	0	2	305	1	308	0	1	342	20	363	773
08:45 AM	0	0	7	33	40	0	21	23	4	48	0	5	294	1	300	0	3	351	26	380	768
Total	0	3	25	141	169	0	94	87	18	199	0	31	1195	4	1230	0	11	1435	89	1535	3133
*** BREAK ***																					
11:30 AM	0	1	7	29	37	0	11	14	4	29	0	8	248	2	258	0	1	298	24	323	647
11:45 AM	0	0	11	24	35	0	9	13	3	25	1	8	277	1	287	0	2	300	15	317	664
Total	0	1	18	53	72	0	20	27	7	54	1	16	525	3	545	0	3	598	39	640	1311
12:00 PM	0	1	8	28	37	0	14	5	3	22	0	10	278	4	292	0	1	309	15	325	676
12:15 PM	0	2	6	33	41	0	20	7	5	32	0	5	278	2	285	0	13	290	10	313	671
12:30 PM	0	2	10	39	51	0	6	7	1	14	0	7	303	3	313	0	1	278	18	297	675
12:45 PM	0	2	6	27	35	0	10	10	5	25	0	9	280	1	290	0	3	323	22	348	698
Total	0	7	30	127	164	0	50	29	14	93	0	31	1139	10	1180	0	18	1200	65	1283	2720
01:00 PM	0	1	15	48	64	0	12	6	3	21	0	9	349	1	359	0	0	306	11	317	761
01:15 PM	0	1	14	50	65	0	11	6	5	22	0	14	324	0	338	0	0	343	11	354	779
*** BREAK ***																					
Total	0	2	29	98	129	0	23	12	8	43	0	23	673	1	697	0	0	649	22	671	1540

*** BREAK ***

W Flagler Street & W 69th Avenue

File Name : TMC-1 W Flagler Street & W 69th Avenue
Site Code : 00000000
Start Date : 9/20/2018
Page No : 2

Groups Printed- Vehicle - Trucks

	W 69th Avenue Southbound					W 69th Avenue Northbound					W Flagler Street Westbound					W Flagler Street Eastbound					
Start Time	U-Turns	Left	Thru	Right	App. Total	U-Turns	Left	Thru	Right	App. Total	U-Turns	Left	Thru	Right	App. Total	U-Turns	Left	Thru	Right	App. Total	Int. Total
04:00 PM	0	5	14	48	67	0	15	13	3	31	0	8	383	3	394	0	0	349	18	367	859
04:15 PM	0	1	9	57	67	0	20	17	5	42	0	8	412	2	422	0	1	375	19	395	926
04:30 PM	0	1	18	73	92	0	30	20	2	52	0	5	417	1	423	0	2	389	21	412	979
04:45 PM	0	3	26	59	88	0	23	8	7	38	0	11	346	2	359	0	0	293	17	310	795
Total	0	10	67	237	314	0	88	58	17	163	0	32	1558	8	1598	0	3	1406	75	1484	3559
05:00 PM	0	2	13	56	71	0	33	19	3	55	0	14	376	0	390	0	0	389	32	421	937
05:15 PM	0	0	26	78	104	0	26	14	4	44	0	8	386	1	395	0	0	363	25	388	931
05:30 PM	0	2	28	65	95	0	24	16	2	42	0	7	336	0	343	0	0	379	19	398	878
05:45 PM	0	2	19	73	94	0	26	9	2	37	0	9	321	3	333	0	1	369	17	387	851
Total	0	6	86	272	364	0	109	58	11	178	0	38	1419	4	1461	0	1	1500	93	1594	3597
06:00 PM	0	3	19	55	77	0	18	10	6	34	0	11	383	0	394	0	0	362	16	378	883
06:15 PM	0	3	19	50	72	0	23	12	0	35	0	5	315	0	320	0	3	357	18	378	805
06:30 PM	0	0	14	46	60	0	17	11	3	31	0	10	356	0	366	0	0	365	23	388	845
06:45 PM	0	2	10	58	70	0	16	15	2	33	0	6	382	1	389	0	0	342	21	363	855
Total	0	8	62	209	279	0	74	48	11	133	0	32	1436	1	1469	0	3	1426	78	1507	3388
Grand Total	0	42	374	1358	1774	0	587	429	112	1128	1	236	10033	35	10305	0	62	10790	521	11373	24580
Apprch %	0	2.4	21.1	76.6		0	52	38	9.9		0	2.3	97.4	0.3		0	0.5	94.9	4.6		
Total %	0	0.2	1.5	5.5	7.2	0	2.4	1.7	0.5	4.6	0	1	40.8	0.1	41.9	0	0.3	43.9	2.1	46.3	
Vehicle	0	41	358	1343	1742	0	561	408	100	1069	1	229	9783	34	10047	0	60	10573	494	11127	23985
% Vehicle	0	97.6	95.7	98.9	98.2	0	95.6	95.1	89.3	94.8	100	97	97.5	97.1	97.5	0	96.8	98	94.8	97.8	97.6
Trucks	0	1	16	15	32	0	26	21	12	59	0	7	250	1	258	0	2	217	27	246	595
% Trucks	0	2.4	4.3	1.1	1.8	0	4.4	4.9	10.7	5.2	0	3	2.5	2.9	2.5	0	3.2	2	5.2	2.2	2.4

W Flagler Street & W 69th Avenue

File Name : TMC-1 W Flagler Street & W 69th Avenue
Site Code : 00000000
Start Date : 9/20/2018
Page No : 3

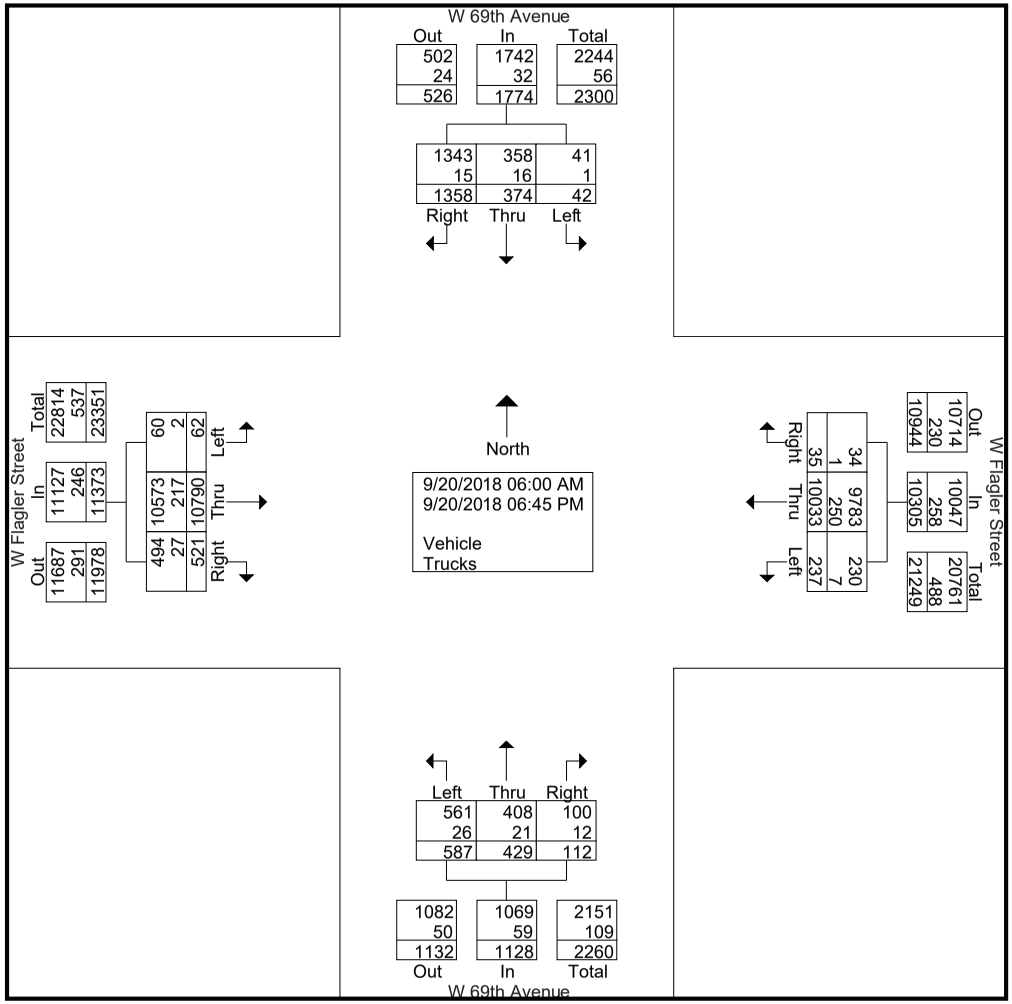

W Flagler Street & W 69th Avenue

File Name : TMC-1 W Flagler Street & W 69th Avenue
Site Code : 00000000
Start Date : 9/20/2018
Page No : 4

	W 69th Avenue Southbound					W 69th Avenue Northbound					W Flagler Street Westbound					W Flagler Street Eastbound					
Start Time	U-Turns	Left	Thru	Right	App. Total	U-Turns	Left	Thru	Right	App. Total	U-Turns	Left	Thru	Right	App. Total	U-Turns	Left	Thru	Right	App. Total	Int. Total
Peak Hour Analysis From 06:00 AM to 08:45 AM - Peak 1 of 1																					
Peak Hour for Entire Intersection Begins at 07:15 AM																					
07:15 AM	0	2	8	29	39	0	11	18	**6**	35	0	3	289	0	292	0	1	**397**	7	405	771
07:30 AM	0	0	**11**	**43**	**54**	0	21	20	3	44	0	3	**341**	0	**344**	0	1	397	15	413	**855**
07:45 AM	0	0	6	33	39	0	**34**	**22**	2	**58**	0	3	301	1	305	0	4	384	18	406	808
08:00 AM	0	**3**	7	35	45	0	28	22	4	54	0	**9**	295	**2**	306	0	**5**	391	**22**	**418**	823
Total Volume	0	5	32	140	177	0	94	82	15	191	0	18	1226	3	1247	0	11	1569	62	1642	3257
% App. Total	0	2.8	18.1	79.1		0	49.2	42.9	7.9		0	1.4	98.3	0.2		0	0.7	95.6	3.8		
PHF	.000	.417	.727	.814	.819	.000	.691	.932	.625	.823	.000	.500	.899	.375	.906	.000	.550	.988	.705	.982	.952

W Flagler Street & W 69th Avenue

File Name : TMC-1 W Flagler Street & W 69th Avenue
Site Code : 00000000
Start Date : 9/20/2018
Page No : 5

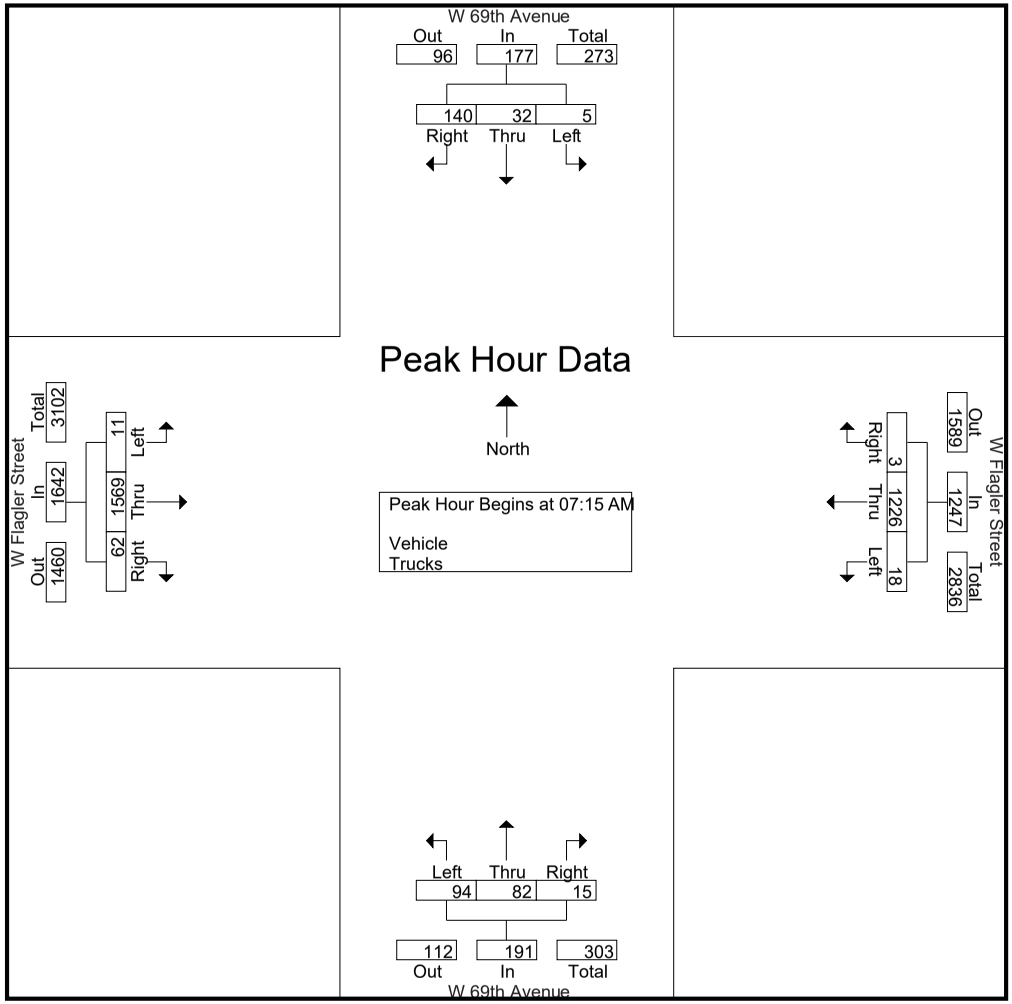

W Flagler Street & W 69th Avenue

File Name : TMC-1 W Flagler Street & W 69th Avenue
Site Code : 00000000
Start Date : 9/20/2018
Page No : 6

	W 69th Avenue Southbound					W 69th Avenue Northbound					W Flagler Street Westbound					W Flagler Street Eastbound					
Start Time	U-Turns	Left	Thru	Right	App. Total	U-Turns	Left	Thru	Right	App. Total	U-Turns	Left	Thru	Right	App. Total	U-Turns	Left	Thru	Right	App. Total	Int. Total
Peak Hour Analysis From 11:30 AM to 01:15 PM - Peak 1 of 1																					
Peak Hour for Entire Intersection Begins at 12:30 PM																					
12:30 PM	0	**2**	10	39	51	0	6	7	1	14	0	7	303	**3**	313	0	1	278	18	297	675
12:45 PM	0	2	6	27	35	0	10	**10**	**5**	**25**	0	9	280	1	290	0	**3**	323	**22**	348	698
01:00 PM	0	1	**15**	48	64	0	**12**	6	3	21	0	9	**349**	1	**359**	0	0	306	11	317	761
01:15 PM	0	1	14	**50**	**65**	0	11	6	5	22	0	**14**	324	0	338	0	0	**343**	11	**354**	**779**
Total Volume	0	6	45	164	215	0	39	29	14	82	0	39	1256	5	1300	0	4	1250	62	1316	2913
% App. Total	0	2.8	20.9	76.3		0	47.6	35.4	17.1		0	3	96.6	0.4		0	0.3	95	4.7		
PHF	.000	.750	.750	.820	.827	.000	.813	.725	.700	.820	.000	.696	.900	.417	.905	.000	.333	.911	.705	.929	.935

W Flagler Street & W 69th Avenue

File Name : TMC-1 W Flagler Street & W 69th Avenue
Site Code : 00000000
Start Date : 9/20/2018
Page No : 7

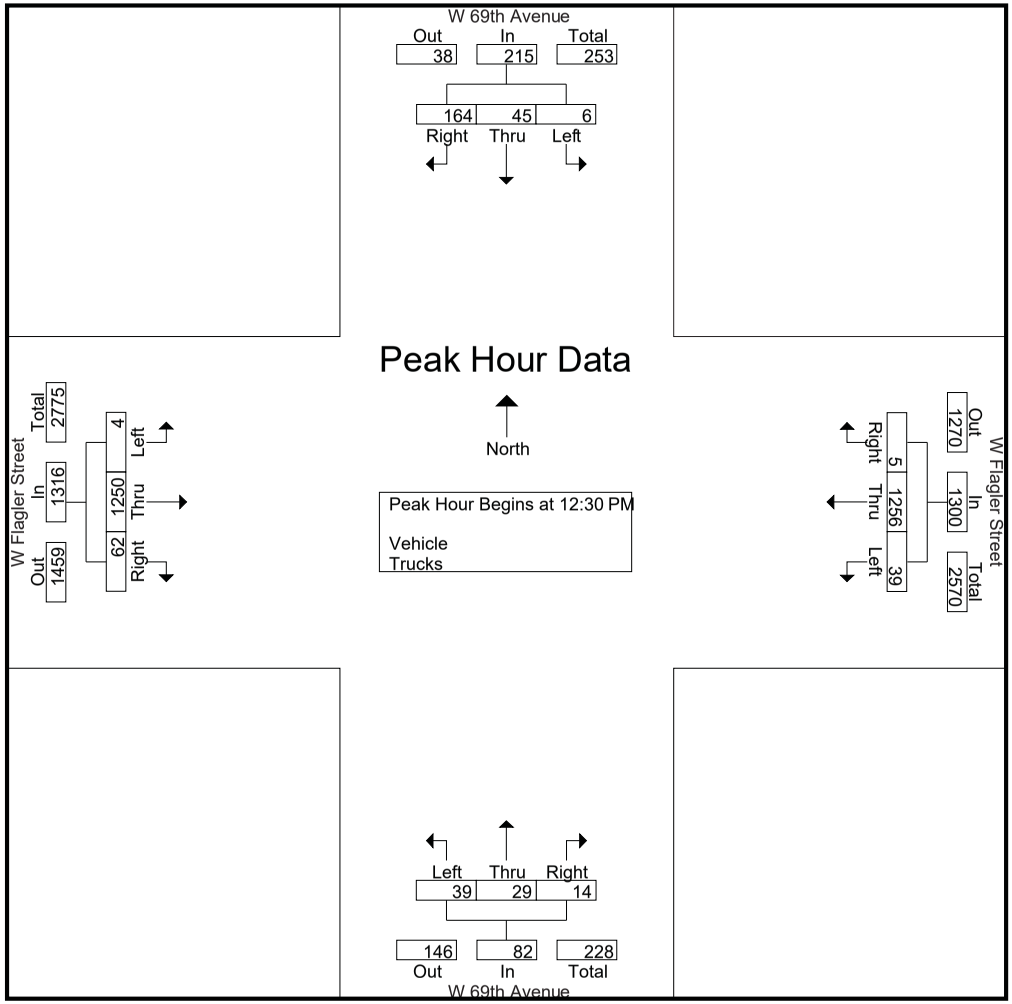

W Flagler Street & W 69th Avenue

File Name : TMC-1 W Flagler Street & W 69th Avenue
Site Code : 00000000
Start Date : 9/20/2018
Page No : 8

	W 69th Avenue Southbound					W 69th Avenue Northbound					W Flagler Street Westbound					W Flagler Street Eastbound					
Start Time	U-Turns	Left	Thru	Right	App. Total	U-Turns	Left	Thru	Right	App. Total	U-Turns	Left	Thru	Right	App. Total	U-Turns	Left	Thru	Right	App. Total	Int. Total
Peak Hour Analysis From 04:00 PM to 06:45 PM - Peak 1 of 1																					
Peak Hour for Entire Intersection Begins at 04:30 PM																					
04:30 PM	0	1	18	73	92	0	30	**20**	2	52	0	5	**417**	1	**423**	0	**2**	**389**	21	412	**979**
04:45 PM	0	**3**	**26**	59	88	0	23	8	**7**	38	0	11	346	**2**	359	0	0	293	17	310	795
05:00 PM	0	2	13	56	71	0	**33**	19	3	**55**	0	**14**	376	0	390	0	0	389	**32**	**421**	937
05:15 PM	0	0	26	**78**	**104**	0	26	14	4	44	0	8	386	1	395	0	0	363	25	388	931
Total Volume	0	6	83	266	355	0	112	61	16	189	0	38	1525	4	1567	0	2	1434	95	1531	3642
% App. Total	0	1.7	23.4	74.9		0	59.3	32.3	8.5		0	2.4	97.3	0.3		0	0.1	93.7	6.2		
PHF	.000	.500	.798	.853	.853	.000	.848	.763	.571	.859	.000	.679	.914	.500	.926	.000	.250	.922	.742	.909	.930

W Flagler Street & W 69th Avenue

File Name : TMC-1 W Flagler Street & W 69th Avenue
Site Code : 00000000
Start Date : 9/20/2018
Page No : 9

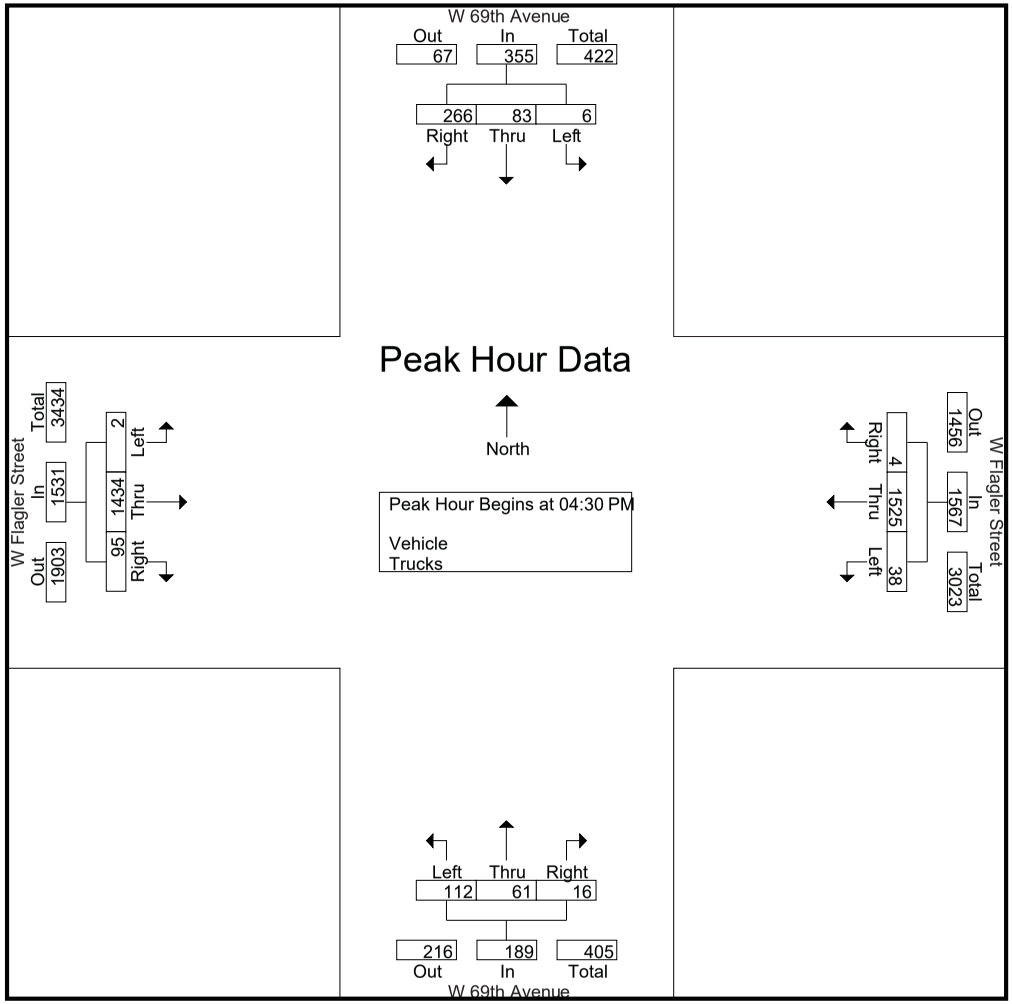

W Flagler Street & Robert King Park

File Name : TMC-2 W Flagler Street & Robert King High Park
Site Code : 00000000
Start Date : 9/20/2018
Page No : 1

Groups Printed- Vehicle - Trucks

	Robert King High Park Southbound					Northbound					W Flagler Street Westbound					W Flagler Street Eastbound					
Start Time	U-Turns	Left	Thru	Right	App. Total	U-Turns	Left	Thru	Right	App. Total	U-Turns	Left	Thru	Right	App. Total	U-Turns	Left	Thru	Right	App. Total	Int. Total
06:00 AM	0	0	0	0	0	0	0	0	0	0	0	0	197	0	197	0	0	174	0	174	371
06:15 AM	0	0	0	1	1	0	0	0	0	0	0	0	230	0	230	2	0	271	0	273	504
06:30 AM	0	0	0	0	0	0	0	0	0	0	0	0	358	0	358	0	0	285	0	285	643
06:45 AM	0	0	0	0	0	0	0	0	0	0	0	0	332	0	332	1	0	322	0	323	655
Total	0	0	0	1	1	0	0	0	0	0	0	0	1117	0	1117	3	0	1052	0	1055	2173
07:00 AM	0	0	0	1	1	0	0	0	0	0	0	0	297	1	298	0	2	351	0	353	652
07:15 AM	0	0	0	2	2	0	0	0	0	0	0	0	335	0	335	3	1	379	0	383	720
07:30 AM	0	0	0	2	2	0	0	0	0	0	0	0	397	2	399	5	0	351	0	356	757
07:45 AM	0	0	0	2	2	0	0	0	0	0	0	0	383	2	385	4	3	402	0	409	796
Total	0	0	0	7	7	0	0	0	0	0	0	0	1412	5	1417	12	6	1483	0	1501	2925
08:00 AM	0	0	0	1	1	0	0	0	0	0	0	0	343	2	345	0	2	416	0	418	764
08:15 AM	0	0	0	0	0	0	0	0	0	0	0	0	346	1	347	1	0	405	0	406	753
08:30 AM	0	0	0	1	1	0	0	0	0	0	0	0	367	0	367	0	1	423	0	424	792
08:45 AM	0	1	0	0	1	0	0	0	0	0	0	0	369	4	373	2	3	426	0	431	805
Total	0	1	0	2	3	0	0	0	0	0	0	0	1425	7	1432	3	6	1670	0	1679	3114
*** BREAK ***																					
11:30 AM	0	0	0	2	2	0	0	0	0	0	0	0	338	0	338	1	4	322	0	327	667
11:45 AM	0	1	0	2	3	0	0	0	0	0	0	0	314	3	317	1	0	321	0	322	642
Total	0	1	0	4	5	0	0	0	0	0	0	0	652	3	655	2	4	643	0	649	1309
12:00 PM	0	2	0	0	2	0	0	0	0	0	0	0	383	1	384	2	0	312	0	314	700
12:15 PM	0	0	0	1	1	0	0	0	0	0	0	0	359	1	360	2	0	331	0	333	694
12:30 PM	0	0	0	0	0	0	0	0	0	0	0	0	308	0	308	0	0	323	0	323	631
12:45 PM	0	0	0	4	4	0	0	0	0	0	0	0	339	2	341	0	4	337	0	341	686
Total	0	2	0	5	7	0	0	0	0	0	0	0	1389	4	1393	4	4	1303	0	1311	2711
01:00 PM	0	1	0	0	1	0	0	0	0	0	0	0	338	0	338	1	2	286	0	289	628
01:15 PM	0	1	0	4	5	0	0	0	0	0	0	0	400	1	401	0	2	385	0	387	793
*** BREAK ***																					
Total	0	2	0	4	6	0	0	0	0	0	0	0	738	1	739	1	4	671	0	676	1421

*** BREAK ***

W Flagler Street & Robert King Park

File Name : TMC-2 W Flagler Street & Robert King High Park
Site Code : 00000000
Start Date : 9/20/2018
Page No : 2

Groups Printed- Vehicle - Trucks

	Robert King High Park Southbound					Northbound					W Flagler Street Westbound					W Flagler Street Eastbound					
Start Time	U-Turns	Left	Thru	Right	App. Total	U-Turns	Left	Thru	Right	App. Total	U-Turns	Left	Thru	Right	App. Total	U-Turns	Left	Thru	Right	App. Total	Int. Total
04:00 PM	0	1	0	2	3	0	0	0	0	0	0	0	452	2	454	0	1	371	0	372	829
04:15 PM	0	0	0	4	4	0	0	0	0	0	0	0	493	3	496	1	5	381	0	387	887
04:30 PM	0	1	0	9	10	0	0	0	0	0	0	0	474	4	478	0	2	366	0	368	856
04:45 PM	0	0	0	2	2	0	0	0	0	0	0	0	486	7	493	1	3	398	0	402	897
Total	0	2	0	17	19	0	0	0	0	0	0	0	1905	16	1921	2	11	1516	0	1529	3469
05:00 PM	0	2	0	6	8	0	0	0	0	0	0	0	433	2	435	0	4	391	0	395	838
05:15 PM	0	2	0	6	8	0	0	0	0	0	0	0	482	1	483	0	6	422	0	428	919
05:30 PM	0	0	0	2	2	0	0	0	0	0	0	0	488	2	490	0	3	407	0	410	902
05:45 PM	0	1	0	4	5	0	0	0	0	0	0	0	386	6	392	1	5	374	0	380	777
Total	0	5	0	18	23	0	0	0	0	0	0	0	1789	11	1800	1	18	1594	0	1613	3436
06:00 PM	0	4	0	3	7	0	0	0	0	0	0	0	455	6	461	0	2	395	0	397	865
06:15 PM	0	1	0	3	4	0	0	0	0	0	0	0	390	3	393	1	7	385	0	393	790
06:30 PM	0	0	0	5	5	0	0	0	0	0	0	0	376	4	380	0	6	395	0	401	786
06:45 PM	0	3	0	3	6	0	0	0	0	0	0	0	362	3	365	0	3	363	0	366	737
Total	0	8	0	14	22	0	0	0	0	0	0	0	1583	16	1599	1	18	1538	0	1557	3178
Grand Total	0	21	0	72	93	0	0	0	0	0	0	0	12010	63	12073	29	71	11470	0	11570	23736
Apprch %	0	22.6	0	77.4		0	0	0	0		0	0	99.5	0.5		0.3	0.6	99.1	0		
Total %	0	0.1	0	0.3	0.4	0	0	0	0	0	0	0	50.6	0.3	50.9	0.1	0.3	48.3	0	48.7	
Vehicle	0	21	0	71	92	0	0	0	0	0	0	0	11871	62	11933	29	71	11323	0	11423	23448
% Vehicle	0	100	0	98.6	98.9	0	0	0	0	0	0	0	98.8	98.4	98.8	100	100	98.7	0	98.7	98.8
Trucks	0	0	0	1	1	0	0	0	0	0	0	0	139	1	140	0	0	147	0	147	288
% Trucks	0	0	0	1.4	1.1	0	0	0	0	0	0	0	1.2	1.6	1.2	0	0	1.3	0	1.3	1.2

W Flagler Street & Robert King Park

File Name : TMC-2 W Flagler Street & Robert King High Park
Site Code : 00000000
Start Date : 9/20/2018
Page No : 3

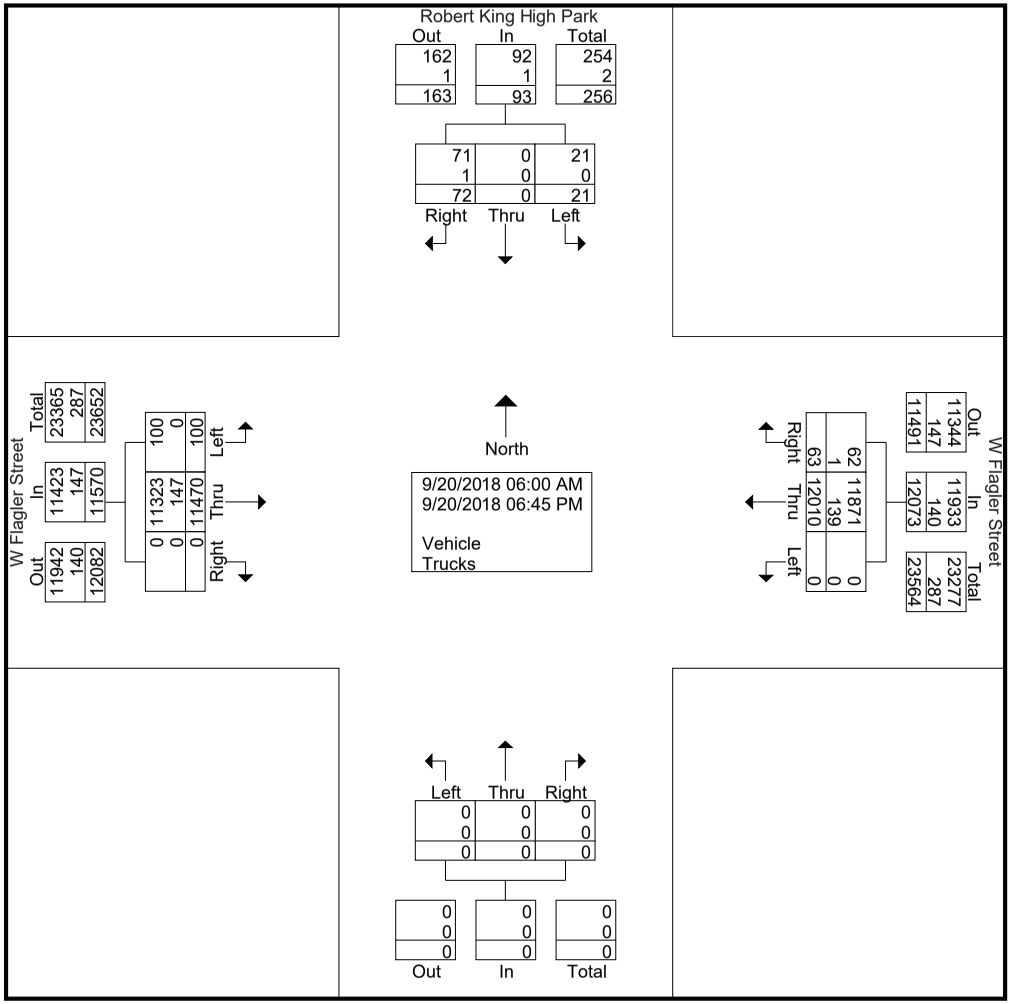

W Flagler Street & Robert King Park

File Name : TMC-2 W Flagler Street & Robert King High Park
Site Code : 00000000
Start Date : 9/20/2018
Page No : 4

	Robert King High Park Southbound					Northbound					W Flagler Street Westbound					W Flagler Street Eastbound					
Start Time	U-Turns	Left	Thru	Right	App. Total	U-Turns	Left	Thru	Right	App. Total	U-Turns	Left	Thru	Right	App. Total	U-Turns	Left	Thru	Right	App. Total	Int. Total
Peak Hour Analysis From 06:00 AM to 08:45 AM - Peak 1 of 1																					
Peak Hour for Entire Intersection Begins at 08:00 AM																					
08:00 AM	0	0	0	**1**	**1**	0	0	0	0	0	0	0	343	2	345	0	2	416	0	418	764
08:15 AM	0	0	0	0	0	0	0	0	0	0	0	0	346	1	347	1	0	405	0	406	753
08:30 AM	0	0	0	1	1	0	0	0	0	0	0	0	367	0	367	0	1	423	0	424	792
08:45 AM	0	**1**	0	0	1	0	0	0	0	0	0	0	**369**	**4**	**373**	**2**	**3**	**426**	0	**431**	**805**
Total Volume	0	1	0	2	3	0	0	0	0	0	0	0	1425	7	1432	3	6	1670	0	1679	3114
% App. Total	0	33.3	0	66.7		0	0	0	0		0	0	99.5	0.5		0.2	0.4	99.5	0		
PHF	.000	.250	.000	.500	.750	.000	.000	.000	.000	.000	.000	.000	.965	.438	.960	.375	.500	.980	.000	.974	.967

W Flagler Street & Robert King Park

File Name : TMC-2 W Flagler Street & Robert King High Park
Site Code : 00000000
Start Date : 9/20/2018
Page No : 5

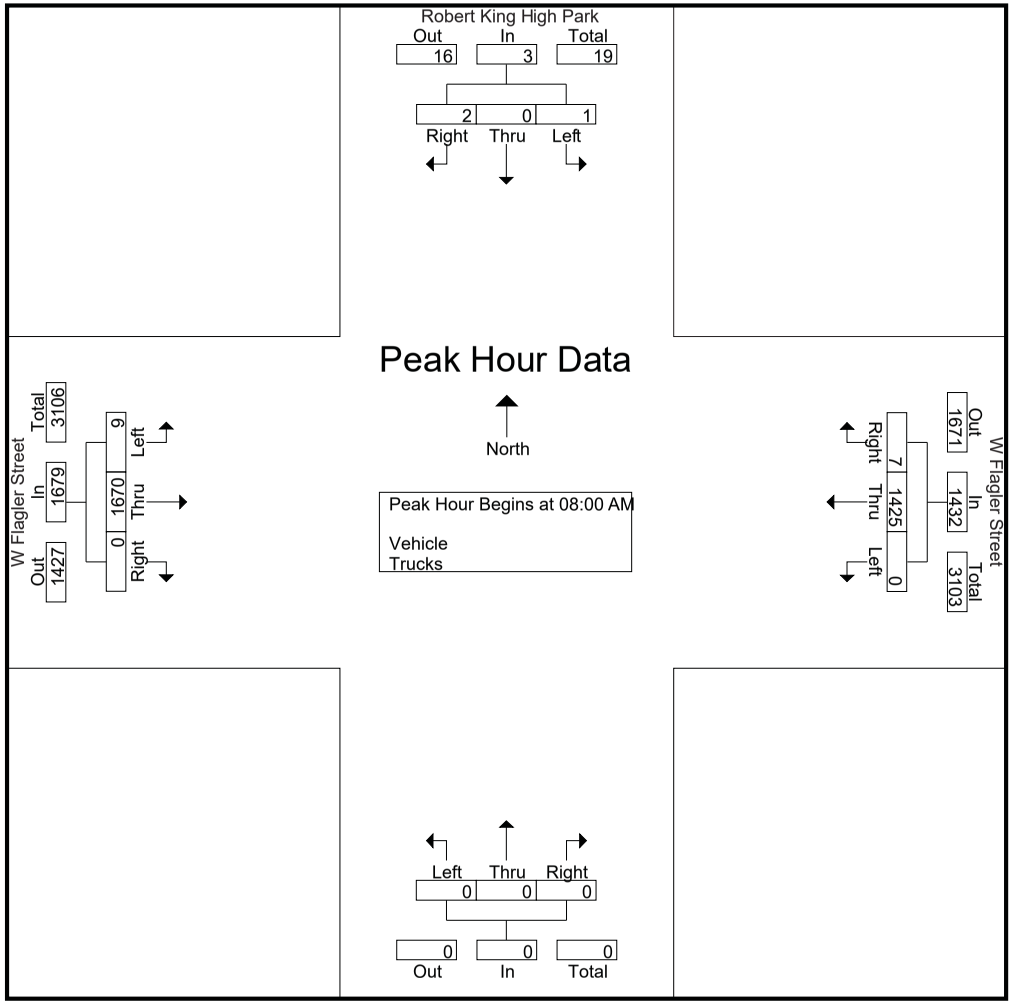

W Flagler Street & Robert King Park

File Name : TMC-2 W Flagler Street & Robert King High Park
Site Code : 00000000
Start Date : 9/20/2018
Page No : 6

	Robert King High Park Southbound					Northbound					W Flagler Street Westbound					W Flagler Street Eastbound					
Start Time	U-Turns	Left	Thru	Right	App. Total	U-Turns	Left	Thru	Right	App. Total	U-Turns	Left	Thru	Right	App. Total	U-Turns	Left	Thru	Right	App. Total	Int. Total
Peak Hour Analysis From 11:30 AM to 01:15 PM - Peak 1 of 1																					
Peak Hour for Entire Intersection Begins at 12:30 PM																					
12:30 PM	0	0	0	0	0	0	0	0	0	0	0	0	308	0	308	0	0	323	0	323	631
12:45 PM	0	0	0	**4**	4	0	0	0	0	0	0	0	339	**2**	341	0	**4**	337	0	341	686
01:00 PM	0	**1**	0	0	1	0	0	0	0	0	0	0	338	0	338	**1**	2	286	0	289	628
01:15 PM	0	1	0	4	**5**	0	0	0	0	0	0	0	**400**	1	**401**	0	2	**385**	0	**387**	**793**
Total Volume	0	2	0	8	10	0	0	0	0	0	0	0	1385	3	1388	1	8	1331	0	1340	2738
% App. Total	0	20	0	80		0	0	0	0		0	0	99.8	0.2		0.1	0.6	99.3	0		
PHF	.000	.500	.000	.500	.500	.000	.000	.000	.000	.000	.000	.000	.866	.375	.865	.250	.500	.864	.000	.866	.863

W Flagler Street & Robert King Park

File Name : TMC-2 W Flagler Street & Robert King High Park
Site Code : 00000000
Start Date : 9/20/2018
Page No : 7

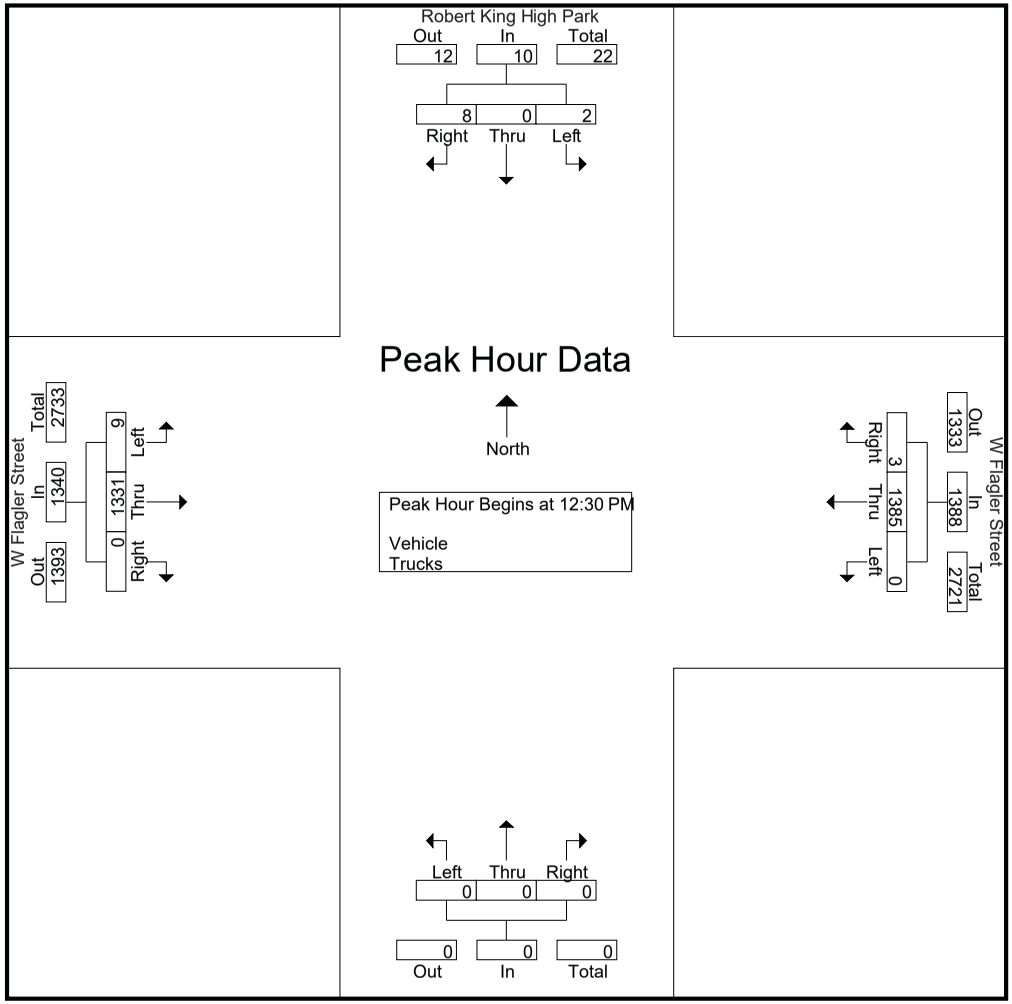

W Flagler Street & Robert King Park

File Name : TMC-2 W Flagler Street & Robert King High Park
Site Code : 00000000
Start Date : 9/20/2018
Page No : 8

	Robert King High Park Southbound					Northbound					W Flagler Street Westbound					W Flagler Street Eastbound					
Start Time	U-Turns	Left	Thru	Right	App. Total	U-Turns	Left	Thru	Right	App. Total	U-Turns	Left	Thru	Right	App. Total	U-Turns	Left	Thru	Right	App. Total	Int. Total
Peak Hour Analysis From 04:00 PM to 06:45 PM - Peak 1 of 1																					
Peak Hour for Entire Intersection Begins at 04:45 PM																					
04:45 PM	0	0	0	2	2	0	0	0	0	0	0	0	486	**7**	**493**	**1**	3	398	0	402	897
05:00 PM	0	**2**	0	**6**	**8**	0	0	0	0	0	0	0	433	2	435	0	4	391	0	395	838
05:15 PM	0	2	0	6	8	0	0	0	0	0	0	0	482	1	483	0	**6**	**422**	0	**428**	**919**
05:30 PM	0	0	0	2	2	0	0	0	0	0	0	0	**488**	2	490	0	3	407	0	410	902
Total Volume	0	4	0	16	20	0	0	0	0	0	0	0	1889	12	1901	1	16	1618	0	1635	3556
% App. Total	0	20	0	80		0	0	0	0		0	0	99.4	0.6		0.1	1	99	0		
PHF	.000	.500	.000	.667	.625	.000	.000	.000	.000	.000	.000	.000	.968	.429	.964	.250	.667	.959	.000	.955	.967

W Flagler Street & Robert King Park

File Name : TMC-2 W Flagler Street & Robert King High Park
Site Code : 00000000
Start Date : 9/20/2018
Page No : 9

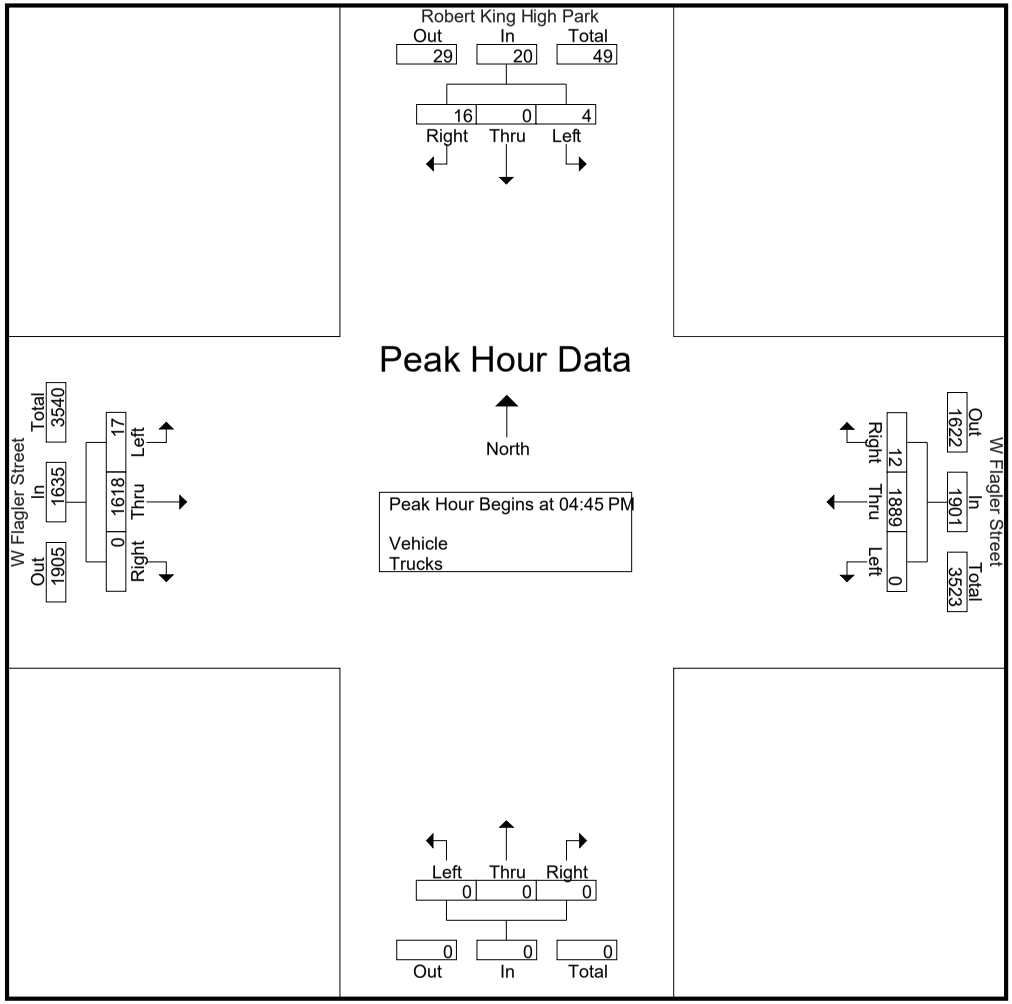

SW 4th Street & SW 69th Avenue

File Name : TMC-3 SW 4th Street & SW 69th Avenue
Site Code : 00000000
Start Date : 9/20/2018
Page No : 1

Groups Printed- Vehicle - Trucks

	SW 69th Avenue Southbound					SW 69th Avenue Northbound					SW 4th Street Westbound					SW 4th Street Eastbound					
Start Time	U-Turns	Left	Thru	Right	App. Total	U-Turns	Left	Thru	Right	App. Total	U-Turns	Left	Thru	Right	App. Total	U-Turns	Left	Thru	Right	App. Total	Int. Total
06:00 AM	0	1	8	5	14	0	3	8	1	12	0	0	8	0	8	0	6	13	4	23	57
06:15 AM	0	2	9	8	19	0	6	8	0	14	0	2	18	0	20	0	5	7	2	14	67
06:30 AM	0	0	7	10	17	0	4	10	0	14	0	0	20	0	20	0	6	28	2	36	87
06:45 AM	0	2	9	5	16	0	10	16	2	28	0	1	23	2	26	0	12	34	6	52	122
Total	0	5	33	28	66	0	23	42	3	68	0	3	69	2	74	0	29	82	14	125	333
07:00 AM	0	2	10	6	18	0	7	11	3	21	0	1	32	1	34	0	15	42	6	63	136
07:15 AM	0	1	11	6	18	0	4	22	4	30	0	2	45	1	48	0	18	38	12	68	164
07:30 AM	0	4	13	13	30	0	10	29	2	41	0	2	44	2	48	0	12	64	12	88	207
07:45 AM	0	6	13	13	32	0	8	17	1	26	0	4	55	5	64	1	18	63	14	96	218
Total	0	13	47	38	98	0	29	79	10	118	0	9	176	9	194	1	63	207	44	315	725
08:00 AM	0	3	15	7	25	0	13	22	2	37	0	0	51	1	52	0	8	99	14	121	235
08:15 AM	0	4	10	7	21	0	4	27	5	36	0	2	45	2	49	0	8	76	11	95	201
08:30 AM	0	5	14	9	28	0	10	23	2	35	0	1	49	3	53	0	12	85	10	107	223
08:45 AM	0	4	13	9	26	0	8	22	1	31	0	2	39	3	44	0	11	109	21	141	242
Total	0	16	52	32	100	0	35	94	10	139	0	5	184	9	198	0	39	369	56	464	901
*** BREAK ***																					
11:30 AM	0	3	12	6	21	0	12	8	2	22	0	1	33	0	34	0	9	56	16	81	158
11:45 AM	0	1	10	12	23	0	10	15	2	27	0	0	30	3	33	0	12	39	16	67	150
Total	0	4	22	18	44	0	22	23	4	49	0	1	63	3	67	0	21	95	32	148	308
12:00 PM	0	5	19	8	32	0	7	18	2	27	0	3	20	2	25	0	11	43	10	64	148
12:15 PM	0	1	17	5	23	0	3	14	1	18	0	1	24	4	29	0	8	31	12	51	121
12:30 PM	0	5	22	7	34	0	11	11	2	24	0	2	26	1	29	0	10	40	12	62	149
12:45 PM	0	11	18	11	40	0	5	9	0	14	0	2	30	1	33	0	10	41	12	63	150
Total	0	22	76	31	129	0	26	52	5	83	0	8	100	8	116	0	39	155	46	240	568
01:00 PM	0	1	17	9	27	0	10	7	0	17	0	2	22	2	26	0	9	37	19	65	135
01:15 PM	0	9	17	4	30	0	3	12	0	15	0	3	27	3	33	0	13	49	16	78	156
*** BREAK ***																					
Total	0	10	34	13	57	0	13	19	0	32	0	5	49	5	59	0	22	86	35	143	291
*** BREAK ***																					
04:00 PM	0	1	20	9	30	0	20	15	2	37	0	3	72	3	78	0	6	54	11	71	216
04:15 PM	0	2	12	13	27	0	15	16	2	33	0	1	60	4	65	0	14	50	10	74	199
04:30 PM	0	7	21	19	47	0	23	13	1	37	0	2	65	4	71	0	13	49	17	79	234
04:45 PM	0	3	20	20	43	0	12	13	2	27	0	2	90	3	95	0	13	44	19	76	241
Total	0	13	73	61	147	0	70	57	7	134	0	8	287	14	309	0	46	197	57	300	890

SW 4th Street & SW 69th Avenue

File Name : TMC-3 SW 4th Street & SW 69th Avenue
Site Code : 00000000
Start Date : 9/20/2018
Page No : 2

Groups Printed- Vehicle - Trucks

	SW 69th Avenue Southbound					SW 69th Avenue Northbound					SW 4th Street Westbound					SW 4th Street Eastbound					
Start Time	U-Turns	Left	Thru	Right	App. Total	U-Turns	Left	Thru	Right	App. Total	U-Turns	Left	Thru	Right	App. Total	U-Turns	Left	Thru	Right	App. Total	Int. Total
05:00 PM	0	1	16	21	38	0	22	13	1	36	0	3	83	2	88	0	17	50	9	76	238
05:15 PM	0	4	22	29	55	0	25	11	0	36	0	3	106	2	111	0	5	46	17	68	270
05:30 PM	0	2	23	27	52	0	46	15	3	64	0	3	100	4	107	0	8	52	12	72	295
05:45 PM	0	1	20	37	58	0	24	10	2	36	0	5	116	4	125	0	4	51	18	73	292
Total	0	8	81	114	203	0	117	49	6	172	0	14	405	12	431	0	34	199	56	289	1095
06:00 PM	0	4	16	27	47	0	23	13	0	36	0	1	121	4	126	0	3	52	8	63	272
06:15 PM	0	3	22	14	39	0	13	15	0	28	0	2	87	3	92	0	5	51	18	74	233
06:30 PM	0	4	14	12	30	0	15	14	0	29	0	4	62	0	66	0	9	50	12	71	196
06:45 PM	0	2	24	11	37	0	9	14	1	24	0	2	53	6	61	0	10	39	11	60	182
Total	0	13	76	64	153	0	60	56	1	117	0	9	323	13	345	0	27	192	49	268	883
Grand Total	0	104	494	399	997	0	395	471	46	912	0	62	1656	75	1793	1	320	1582	389	2292	5994
Apprch %	0	10.4	49.5	40		0	43.3	51.6	5		0	3.5	92.4	4.2		0	14	69	17		
Total %	0	1.7	8.2	6.7	16.6	0	6.6	7.9	0.8	15.2	0	1	27.6	1.3	29.9	0	5.3	26.4	6.5	38.2	
Vehicle	0	101	462	373	936	0	378	461	46	885	0	60	1634	58	1752	1	290	1539	382	2212	5785
% Vehicle	0	97.1	93.5	93.5	93.9	0	95.7	97.9	100	97	0	96.8	98.7	77.3	97.7	100	90.6	97.3	98.2	96.5	96.5
Trucks	0	3	32	26	61	0	17	10	0	27	0	2	22	17	41	0	30	43	7	80	209
% Trucks	0	2.9	6.5	6.5	6.1	0	4.3	2.1	0	3	0	3.2	1.3	22.7	2.3	0	9.4	2.7	1.8	3.5	3.5

SW 4th Street & SW 69th Avenue

File Name : TMC-3 SW 4th Street & SW 69th Avenue
Site Code : 00000000
Start Date : 9/20/2018
Page No : 3

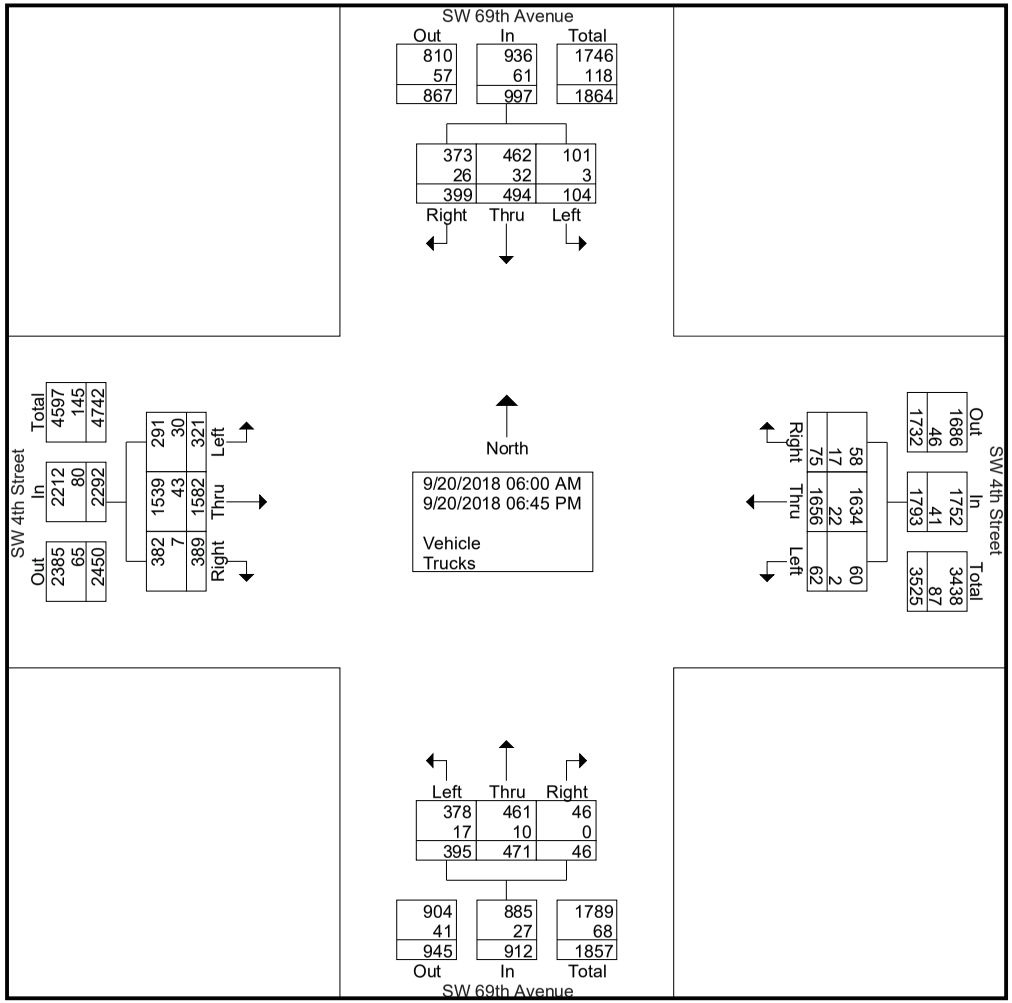

SW 4th Street & SW 69th Avenue

File Name : TMC-3 SW 4th Street & SW 69th Avenue
Site Code : 00000000
Start Date : 9/20/2018
Page No : 4

	SW 69th Avenue Southbound					SW 69th Avenue Northbound					SW 4th Street Westbound					SW 4th Street Eastbound					
Start Time	U-Turns	Left	Thru	Right	App. Total	U-Turns	Left	Thru	Right	App. Total	U-Turns	Left	Thru	Right	App. Total	U-Turns	Left	Thru	Right	App. Total	Int. Total
Peak Hour Analysis From 06:00 AM to 08:45 AM - Peak 1 of 1																					
Peak Hour for Entire Intersection Begins at 08:00 AM																					
08:00 AM	0	3	**15**	7	25	0	**13**	22	2	**37**	0	0	**51**	1	52	0	8	99	14	121	235
08:15 AM	0	4	10	7	21	0	4	**27**	**5**	36	0	**2**	45	2	49	0	8	76	11	95	201
08:30 AM	0	**5**	14	**9**	**28**	0	10	23	2	35	0	1	49	**3**	**53**	0	**12**	85	10	107	223
08:45 AM	0	4	13	9	26	0	8	22	1	31	0	2	39	3	44	0	11	**109**	**21**	**141**	**242**
Total Volume	0	16	52	32	100	0	35	94	10	139	0	5	184	9	198	0	39	369	56	464	901
% App. Total	0	16	52	32		0	25.2	67.6	7.2		0	2.5	92.9	4.5		0	8.4	79.5	12.1		
PHF	.000	.800	.867	.889	.893	.000	.673	.870	.500	.939	.000	.625	.902	.750	.934	.000	.813	.846	.667	.823	.931

SW 4th Street & SW 69th Avenue

File Name : TMC-3 SW 4th Street & SW 69th Avenue
Site Code : 00000000
Start Date : 9/20/2018
Page No : 5

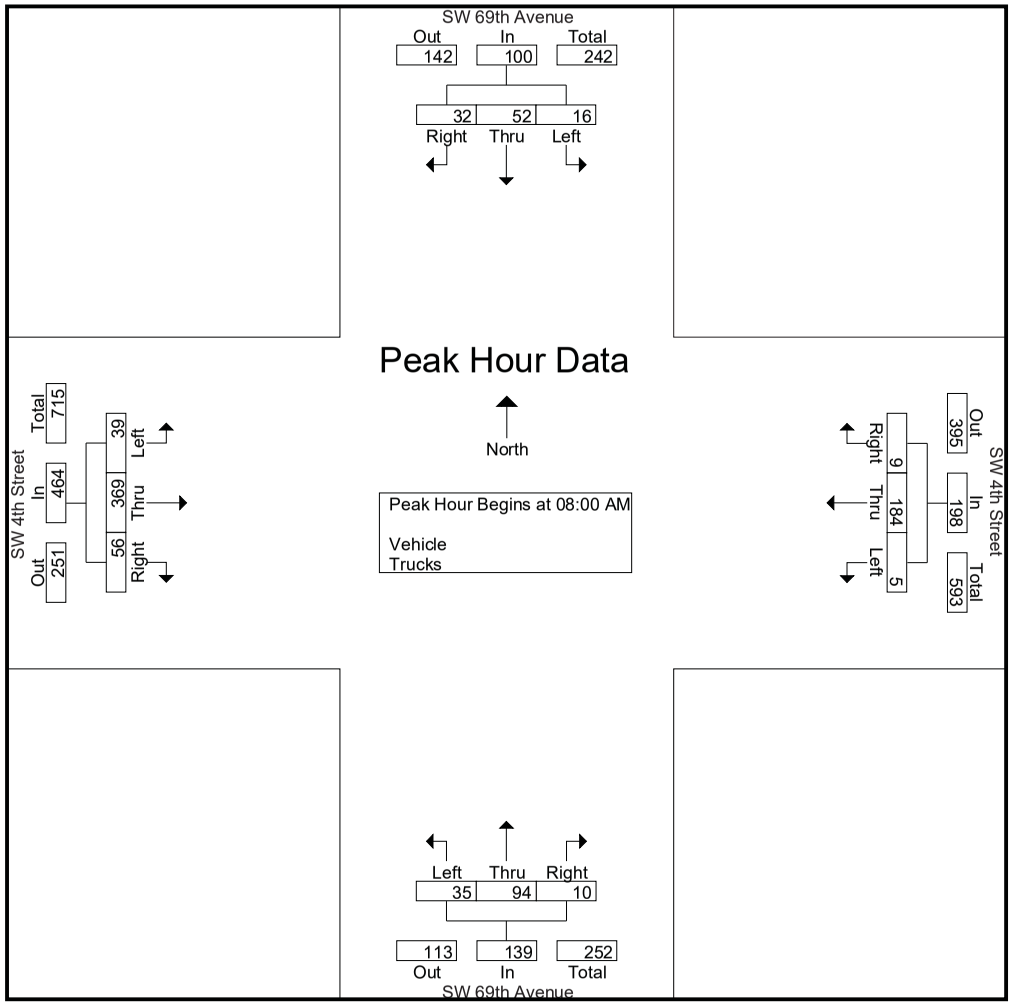

SW 4th Street & SW 69th Avenue

File Name : TMC-3 SW 4th Street & SW 69th Avenue
Site Code : 00000000
Start Date : 9/20/2018
Page No : 6

	SW 69th Avenue Southbound					SW 69th Avenue Northbound					SW 4th Street Westbound					SW 4th Street Eastbound					
Start Time	U-Turns	Left	Thru	Right	App. Total	U-Turns	Left	Thru	Right	App. Total	U-Turns	Left	Thru	Right	App. Total	U-Turns	Left	Thru	Right	App. Total	Int. Total
Peak Hour Analysis From 11:30 AM to 01:15 PM - Peak 1 of 1																					
Peak Hour for Entire Intersection Begins at 12:30 PM																					
12:30 PM	0	5	**22**	7	34	0	**11**	11	**2**	**24**	0	2	26	1	29	0	10	40	12	62	149
12:45 PM	0	**11**	18	**11**	**40**	0	5	9	0	14	0	2	**30**	1	**33**	0	10	41	12	63	150
01:00 PM	0	1	17	9	27	0	10	7	0	17	0	2	22	2	26	0	9	37	**19**	65	135
01:15 PM	0	9	17	4	30	0	3	**12**	0	15	0	**3**	27	**3**	33	0	**13**	**49**	16	**78**	**156**
Total Volume	0	26	74	31	131	0	29	39	2	70	0	9	105	7	121	0	42	167	59	268	590
% App. Total	0	19.8	56.5	23.7		0	41.4	55.7	2.9		0	7.4	86.8	5.8		0	15.7	62.3	22		
PHF	.000	.591	.841	.705	.819	.000	.659	.813	.250	.729	.000	.750	.875	.583	.917	.000	.808	.852	.776	.859	.946

SW 4th Street & SW 69th Avenue

File Name : TMC-3 SW 4th Street & SW 69th Avenue
Site Code : 00000000
Start Date : 9/20/2018
Page No : 7

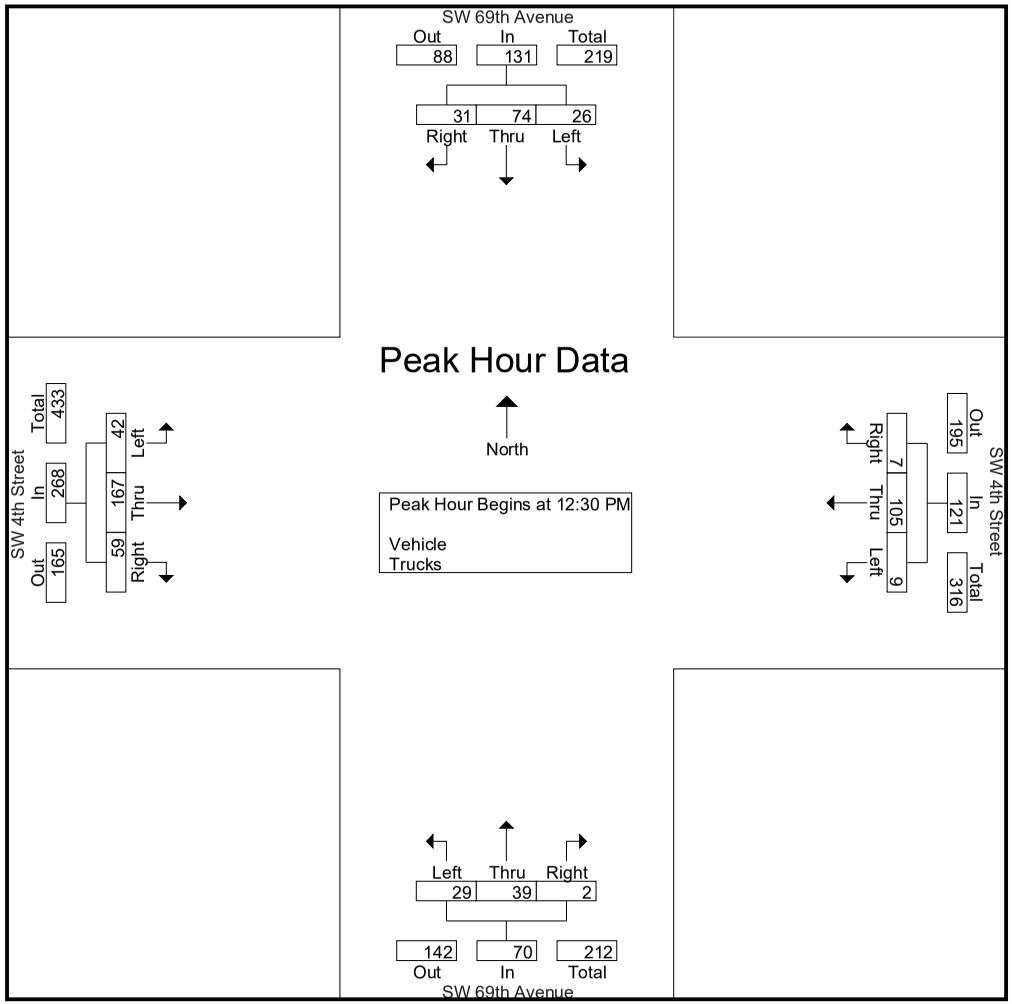

SW 4th Street & SW 69th Avenue

File Name : TMC-3 SW 4th Street & SW 69th Avenue
Site Code : 00000000
Start Date : 9/20/2018
Page No : 8

	SW 69th Avenue Southbound					SW 69th Avenue Northbound					SW 4th Street Westbound					SW 4th Street Eastbound					
Start Time	U-Turns	Left	Thru	Right	App. Total	U-Turns	Left	Thru	Right	App. Total	U-Turns	Left	Thru	Right	App. Total	U-Turns	Left	Thru	Right	App. Total	Int. Total
Peak Hour Analysis From 04:00 PM to 06:45 PM - Peak 1 of 1																					
Peak Hour for Entire Intersection Begins at 05:15 PM																					
05:15 PM	0	**4**	22	29	55	0	25	11	0	36	0	3	106	2	111	0	5	46	17	68	270
05:30 PM	0	2	**23**	27	52	0	**46**	**15**	**3**	**64**	0	3	100	**4**	107	0	**8**	**52**	12	72	**295**
05:45 PM	0	1	20	**37**	**58**	0	24	10	2	36	0	**5**	116	4	125	0	4	51	**18**	**73**	292
06:00 PM	0	4	16	27	47	0	23	13	0	36	0	1	**121**	4	**126**	0	3	52	8	63	272
Total Volume	0	11	81	120	212	0	118	49	5	172	0	12	443	14	469	0	20	201	55	276	1129
% App. Total	0	5.2	38.2	56.6		0	68.6	28.5	2.9		0	2.6	94.5	3		0	7.2	72.8	19.9		
PHF	.000	.688	.880	.811	.914	.000	.641	.817	.417	.672	.000	.600	.915	.875	.931	.000	.625	.966	.764	.945	.957

SW 4th Street & SW 69th Avenue

File Name : TMC-3 SW 4th Street & SW 69th Avenue
Site Code : 00000000
Start Date : 9/20/2018
Page No : 9

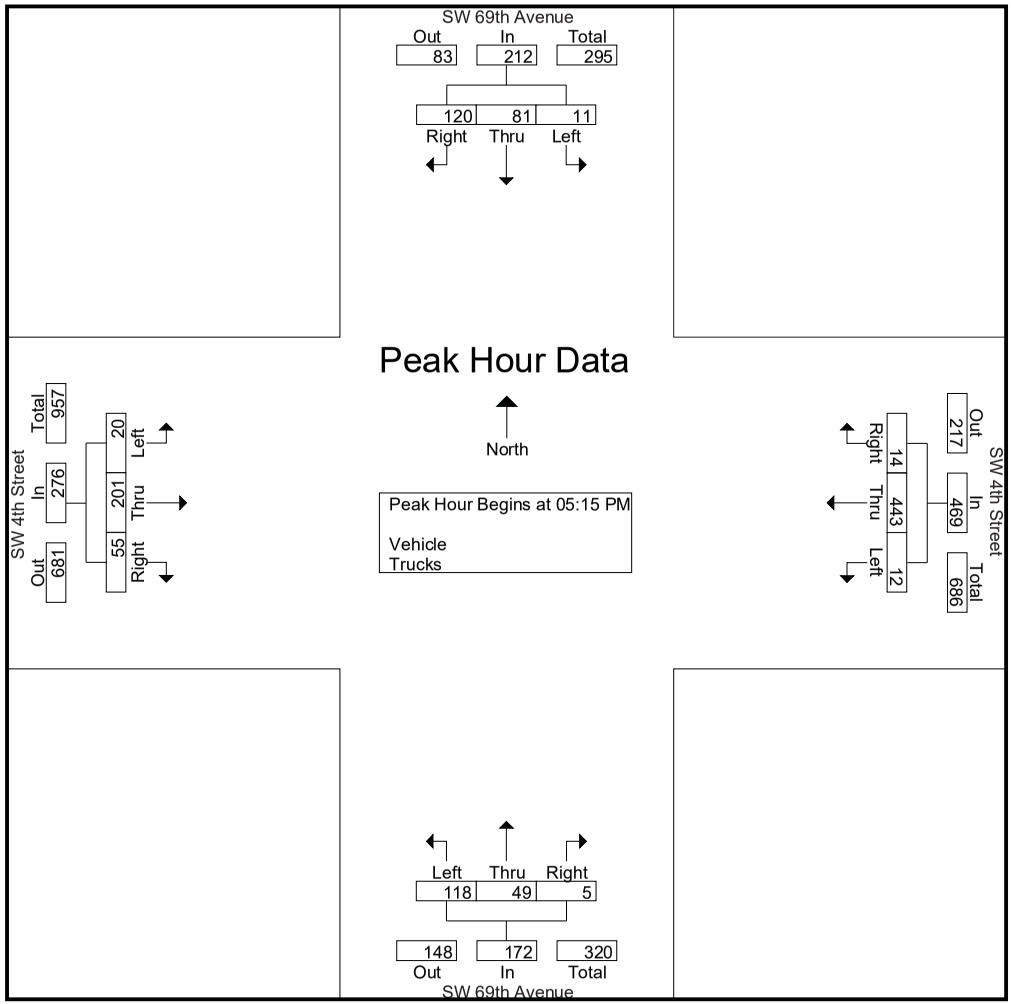

Tamiami Trail/SW 8th Street & SW 70th Avenue

File Name : TMC-4 Tamiami Trail-SW 8th St & SW 70th Avenue
Site Code : 00000000
Start Date : 9/20/2018
Page No : 1

Groups Printed- Vehicle - Trucks

	SW 70th Avenue Southbound					SW 70th Avenue Northbound					Tamiami Trail/SW 8th Street Westbound					Tamiami Trail/SW 8th Street Eastbound					
Start Time	U-Turns	Left	Thru	Right	App. Total	U-Turns	Left	Thru	Right	App. Total	U-Turns	Left	Thru	Right	App. Total	U-Turns	Left	Thru	Right	App. Total	Int. Total
06:00 AM	0	4	1	2	7	0	2	2	6	10	0	0	185	3	188	0	10	249	3	262	467
06:15 AM	0	8	1	5	14	0	5	1	4	10	0	0	230	15	245	0	8	340	2	350	619
06:30 AM	0	9	1	9	19	0	4	0	5	9	0	0	264	7	271	0	9	340	11	360	659
06:45 AM	0	6	0	4	10	0	12	1	4	17	0	2	245	9	256	0	14	442	7	463	746
Total	0	27	3	20	50	0	23	4	19	46	0	2	924	34	960	0	41	1371	23	1435	2491
07:00 AM	0	16	0	5	21	0	5	3	8	16	0	8	284	8	300	0	14	455	5	474	811
07:15 AM	0	16	3	4	23	0	17	2	16	35	0	8	331	7	346	0	8	431	6	445	849
07:30 AM	0	11	1	8	20	0	20	0	15	35	0	3	337	15	355	0	7	417	9	433	843
07:45 AM	0	8	1	3	12	0	22	1	12	35	0	10	351	11	372	0	2	401	5	408	827
Total	0	51	5	20	76	0	64	6	51	121	0	29	1303	41	1373	0	31	1704	25	1760	3330
08:00 AM	0	6	0	8	14	0	10	7	10	27	0	6	292	19	317	0	3	427	6	436	794
08:15 AM	0	5	4	14	23	0	15	4	13	32	0	3	304	17	324	0	4	349	3	356	735
08:30 AM	0	8	0	11	19	0	15	6	7	28	0	7	326	19	352	0	6	411	3	420	819
08:45 AM	0	13	3	6	22	0	12	4	12	28	0	7	340	18	365	0	8	404	8	420	835
Total	0	32	7	39	78	0	52	21	42	115	0	23	1262	73	1358	0	21	1591	20	1632	3183
*** BREAK ***																					
11:30 AM	0	17	8	14	39	0	9	3	13	25	0	11	343	30	384	0	12	335	13	360	808
11:45 AM	0	14	5	11	30	0	11	8	6	25	0	6	322	24	352	0	15	358	6	379	786
Total	0	31	13	25	69	0	20	11	19	50	0	17	665	54	736	0	27	693	19	739	1594
12:00 PM	0	21	7	17	45	0	20	4	9	33	0	6	283	38	327	0	8	287	9	304	709
12:15 PM	0	23	8	13	44	0	12	9	15	36	0	4	340	29	373	0	13	315	12	340	793
12:30 PM	0	25	2	25	52	0	16	6	8	30	0	12	343	23	378	0	15	314	4	333	793
12:45 PM	0	19	11	16	46	0	9	5	12	26	0	8	337	31	376	1	16	330	6	353	801
Total	0	88	28	71	187	0	57	24	44	125	0	30	1303	121	1454	1	52	1246	31	1330	3096
01:00 PM	0	18	3	14	35	0	13	5	12	30	0	9	376	32	417	0	9	333	10	352	834
01:15 PM	0	29	4	19	52	0	10	8	17	35	0	5	336	34	375	0	11	319	13	343	805
*** BREAK ***																					
Total	0	47	7	33	87	0	23	13	29	65	0	14	712	66	792	0	20	652	23	695	1639

*** BREAK ***

Tamiami Trail/SW 8th Street & SW 70th Avenue

File Name : TMC-4 Tamiami Trail-SW 8th St & SW 70th Avenue
Site Code : 00000000
Start Date : 9/20/2018
Page No : 2

Groups Printed- Vehicle - Trucks

	SW 70th Avenue Southbound					SW 70th Avenue Northbound					Tamiami Trail/SW 8th Street Westbound					Tamiami Trail/SW 8th Street Eastbound					
Start Time	U-Turns	Left	Thru	Right	App. Total	U-Turns	Left	Thru	Right	App. Total	U-Turns	Left	Thru	Right	App. Total	U-Turns	Left	Thru	Right	App. Total	Int. Total
04:00 PM	0	20	11	19	50	0	15	6	12	33	0	13	397	24	434	0	11	335	8	354	871
04:15 PM	0	12	3	12	27	0	12	2	7	21	0	5	355	17	377	0	17	330	5	352	777
04:30 PM	0	21	7	13	41	0	15	6	12	33	0	14	326	33	373	0	13	311	10	334	781
04:45 PM	0	19	5	21	45	0	10	7	11	28	0	7	309	28	344	0	20	318	11	349	766
Total	0	72	26	65	163	0	52	21	42	115	0	39	1387	102	1528	0	61	1294	34	1389	3195
05:00 PM	0	14	9	18	41	0	14	4	15	33	0	2	291	18	311	0	16	347	9	372	757
05:15 PM	0	23	6	9	38	0	15	5	10	30	0	5	234	30	269	0	16	356	10	382	719
05:30 PM	0	17	14	17	48	0	10	11	11	32	0	3	218	30	251	0	18	332	7	357	688
05:45 PM	0	20	7	16	43	0	5	11	6	22	0	2	238	42	282	0	12	272	5	289	636
Total	0	74	36	60	170	0	44	31	42	117	0	12	981	120	1113	0	62	1307	31	1400	2800
06:00 PM	0	25	10	12	47	0	6	3	7	16	0	2	260	31	293	0	15	329	3	347	703
06:15 PM	0	21	5	16	42	0	7	8	3	18	0	10	302	40	352	0	18	298	3	319	731
06:30 PM	0	34	10	20	64	0	3	6	5	14	0	6	299	36	341	0	19	285	6	310	729
06:45 PM	0	27	7	21	55	0	7	6	8	21	0	6	279	28	313	0	15	289	4	308	697
Total	0	107	32	69	208	0	23	23	23	69	0	24	1140	135	1299	0	67	1201	16	1284	2860
Grand Total	0	529	157	402	1088	0	358	154	311	823	0	190	9677	746	10613	1	382	11059	222	11664	24188
Apprch %	0	48.6	14.4	36.9		0	43.5	18.7	37.8		0	1.8	91.2	7		0	3.3	94.8	1.9		
Total %	0	2.2	0.6	1.7	4.5	0	1.5	0.6	1.3	3.4	0	0.8	40	3.1	43.9	0	1.6	45.7	0.9	48.2	
Vehicle	0	508	156	393	1057	0	344	153	303	800	0	186	9500	733	10419	1	377	10967	216	11561	23837
% Vehicle	0	96	99.4	97.8	97.2	0	96.1	99.4	97.4	97.2	0	97.9	98.2	98.3	98.2	100	98.7	99.2	97.3	99.1	98.5
Trucks	0	21	1	9	31	0	14	1	8	23	0	4	177	13	194	0	5	92	6	103	351
% Trucks	0	4	0.6	2.2	2.8	0	3.9	0.6	2.6	2.8	0	2.1	1.8	1.7	1.8	0	1.3	0.8	2.7	0.9	1.5

Tamiami Trail/SW 8th Street & SW 70th Avenue

File Name : TMC-4 Tamiami Trail-SW 8th St & SW 70th Avenue
Site Code : 00000000
Start Date : 9/20/2018
Page No : 3

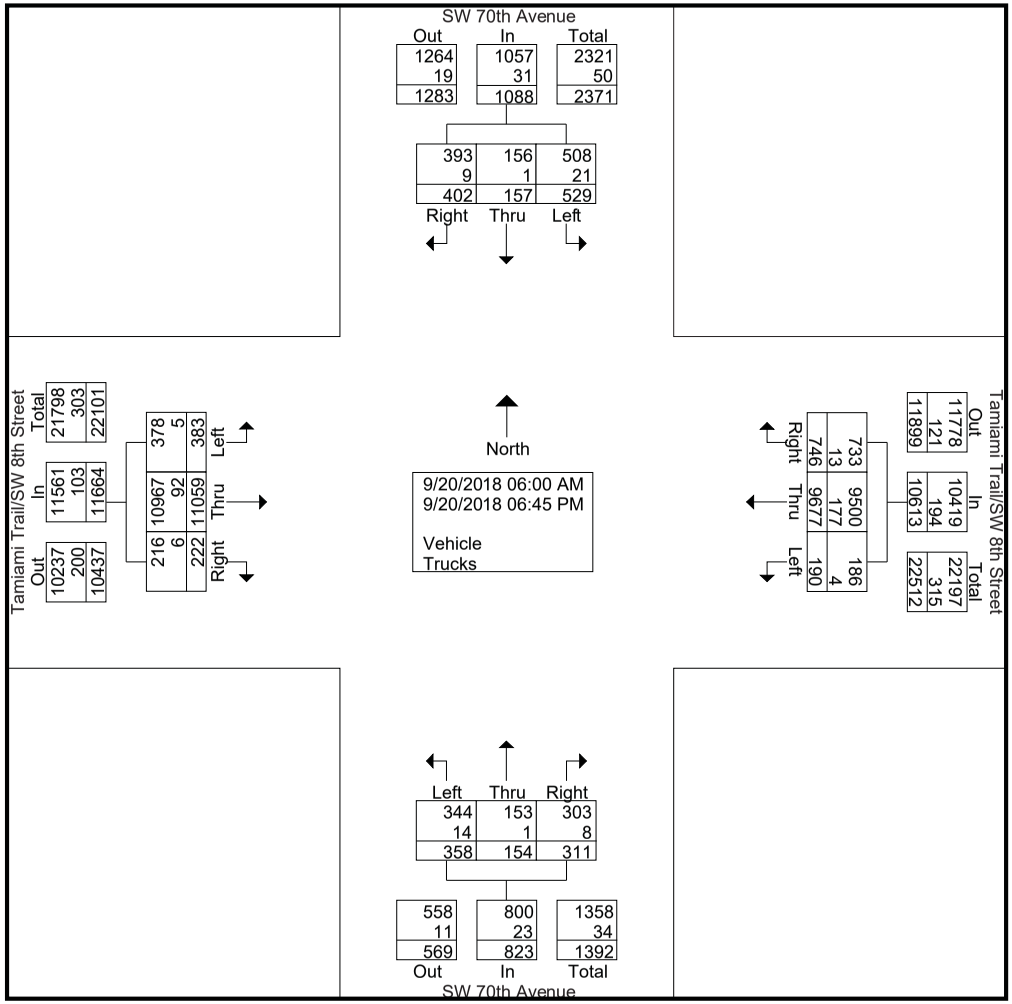

Tamiami Trail/SW 8th Street & SW 70th Avenue

File Name : TMC-4 Tamiami Trail-SW 8th St & SW 70th Avenue
Site Code : 00000000
Start Date : 9/20/2018
Page No : 4

	SW 70th Avenue Southbound					SW 70th Avenue Northbound					Tamiami Trail/SW 8th Street Westbound					Tamiami Trail/SW 8th Street Eastbound					
Start Time	U-Turns	Left	Thru	Right	App. Total	U-Turns	Left	Thru	Right	App. Total	U-Turns	Left	Thru	Right	App. Total	U-Turns	Left	Thru	Right	App. Total	Int. Total
Peak Hour Analysis From 06:00 AM to 08:45 AM - Peak 1 of 1																					
Peak Hour for Entire Intersection Begins at 07:00 AM																					
07:00 AM	0	**16**	0	5	21	0	5	**3**	8	16	0	8	284	8	300	0	**14**	**455**	5	**474**	811
07:15 AM	0	16	**3**	4	**23**	0	17	2	**16**	**35**	0	8	331	7	346	0	8	431	6	445	**849**
07:30 AM	0	11	1	**8**	20	0	20	0	15	35	0	3	337	**15**	355	0	7	417	**9**	433	843
07:45 AM	0	8	1	3	12	0	**22**	1	12	35	0	**10**	**351**	11	**372**	0	2	401	5	408	827
Total Volume	0	51	5	20	76	0	64	6	51	121	0	29	1303	41	1373	0	31	1704	25	1760	3330
% App. Total	0	67.1	6.6	26.3		0	52.9	5	42.1		0	2.1	94.9	3		0	1.8	96.8	1.4		
PHF	.000	.797	.417	.625	.826	.000	.727	.500	.797	.864	.000	.725	.928	.683	.923	.000	.554	.936	.694	.928	.981

Tamiami Trail/SW 8th Street & SW 70th Avenue

File Name : TMC-4 Tamiami Trail-SW 8th St & SW 70th Avenue
Site Code : 00000000
Start Date : 9/20/2018
Page No : 5

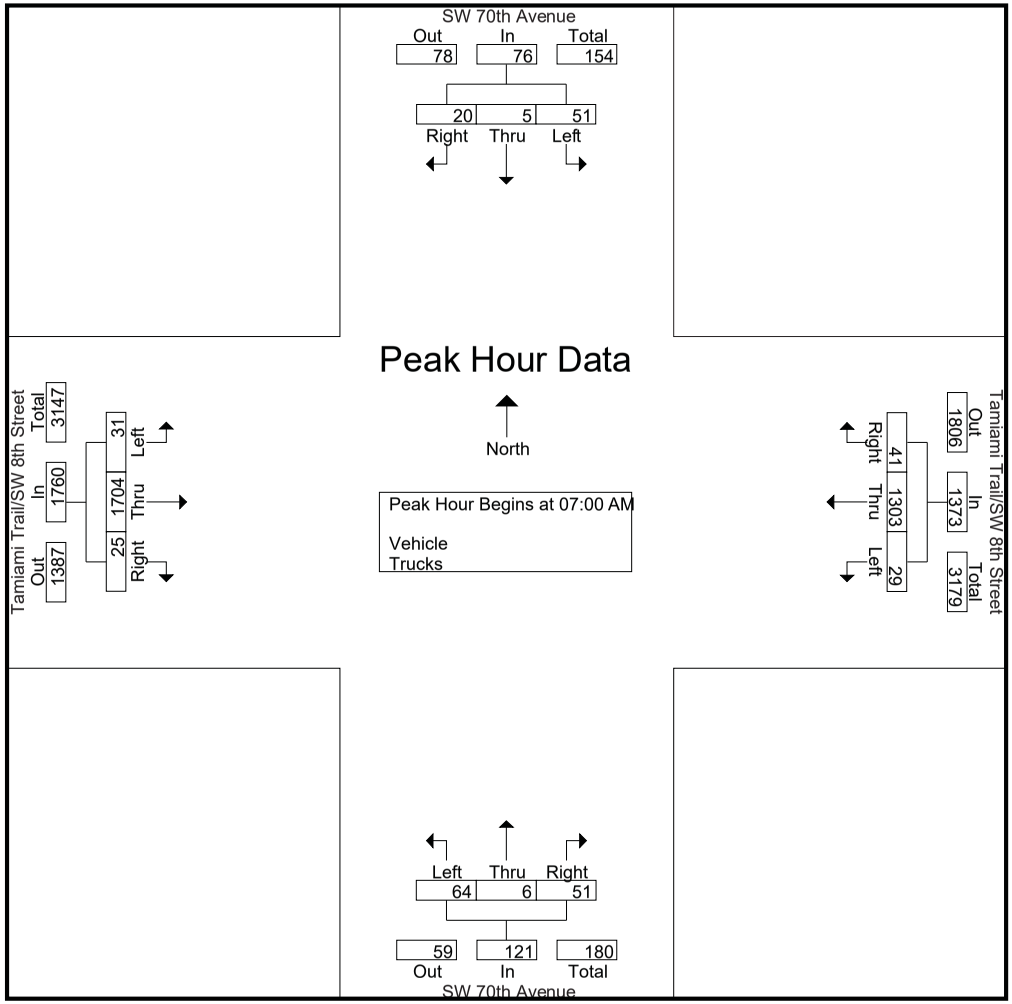

Tamiami Trail/SW 8th Street & SW 70th Avenue

File Name : TMC-4 Tamiami Trail-SW 8th St & SW 70th Avenue
Site Code : 00000000
Start Date : 9/20/2018
Page No : 6

	SW 70th Avenue Southbound					SW 70th Avenue Northbound					Tamiami Trail/SW 8th Street Westbound					Tamiami Trail/SW 8th Street Eastbound					
Start Time	U-Turns	Left	Thru	Right	App. Total	U-Turns	Left	Thru	Right	App. Total	U-Turns	Left	Thru	Right	App. Total	U-Turns	Left	Thru	Right	App. Total	Int. Total
Peak Hour Analysis From 11:30 AM to 01:15 PM - Peak 1 of 1																					
Peak Hour for Entire Intersection Begins at 12:30 PM																					
12:30 PM	0	25	2	**25**	**52**	0	**16**	6	8	30	0	**12**	343	23	378	0	15	314	4	333	793
12:45 PM	0	19	**11**	16	46	0	9	5	12	26	0	8	337	31	376	**1**	**16**	330	6	**353**	801
01:00 PM	0	18	3	14	35	0	13	5	12	30	0	9	**376**	32	**417**	0	9	**333**	10	352	**834**
01:15 PM	0	**29**	4	19	52	0	10	**8**	**17**	**35**	0	5	336	**34**	375	0	11	319	**13**	343	805
Total Volume	0	91	20	74	185	0	48	24	49	121	0	34	1392	120	1546	1	51	1296	33	1381	3233
% App. Total	0	49.2	10.8	40		0	39.7	19.8	40.5		0	2.2	90	7.8		0.1	3.7	93.8	2.4		
PHF	.000	.784	.455	.740	.889	.000	.750	.750	.721	.864	.000	.708	.926	.882	.927	.250	.797	.973	.635	.978	.969

Tamiami Trail/SW 8th Street & SW 70th Avenue

File Name : TMC-4 Tamiami Trail-SW 8th St & SW 70th Avenue
Site Code : 00000000
Start Date : 9/20/2018
Page No : 7

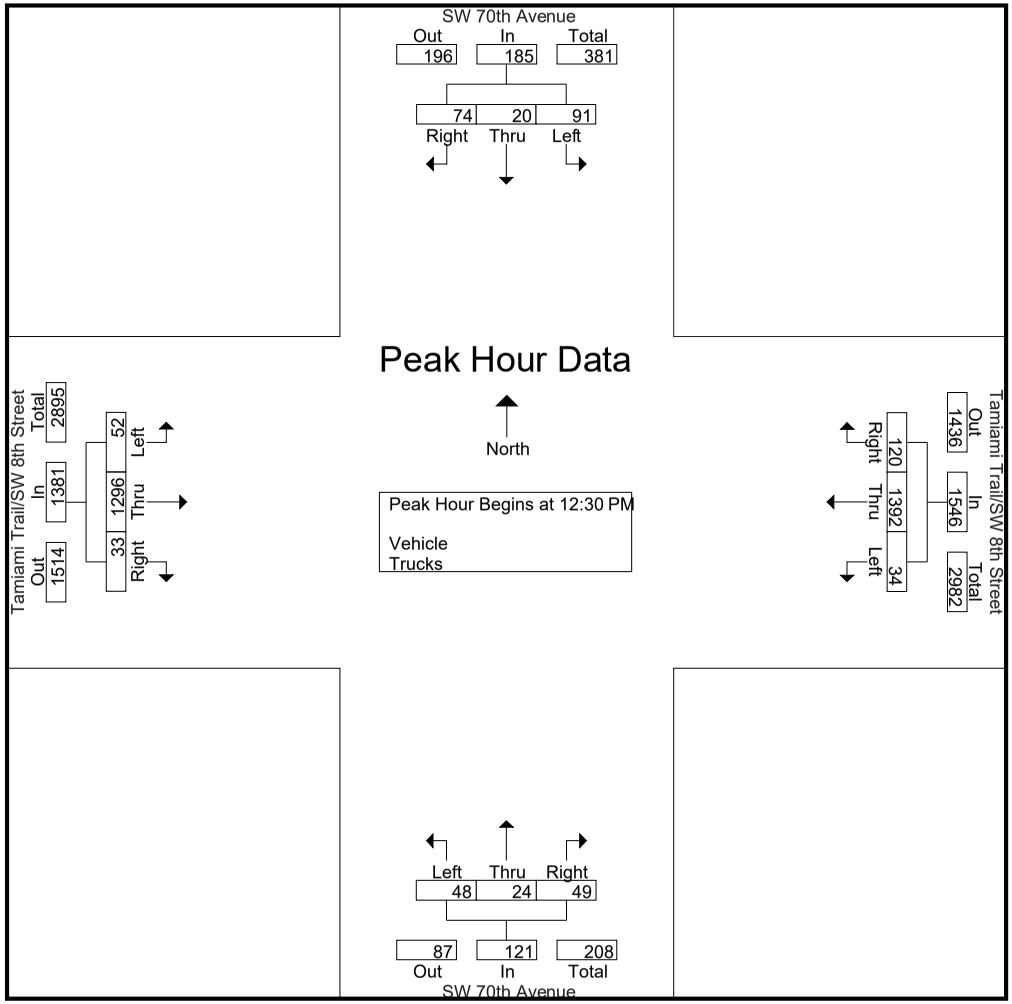

Tamiami Trail/SW 8th Street & SW 70th Avenue

File Name : TMC-4 Tamiami Trail-SW 8th St & SW 70th Avenue
Site Code : 00000000
Start Date : 9/20/2018
Page No : 8

	SW 70th Avenue Southbound					SW 70th Avenue Northbound					Tamiami Trail/SW 8th Street Westbound					Tamiami Trail/SW 8th Street Eastbound					
Start Time	U-Turns	Left	Thru	Right	App. Total	U-Turns	Left	Thru	Right	App. Total	U-Turns	Left	Thru	Right	App. Total	U-Turns	Left	Thru	Right	App. Total	Int. Total
Peak Hour Analysis From 04:00 PM to 06:45 PM - Peak 1 of 1																					
Peak Hour for Entire Intersection Begins at 04:00 PM																					
04:00 PM	0	20	**11**	19	**50**	0	**15**	6	**12**	**33**	0	13	**397**	24	**434**	0	11	**335**	8	**354**	**871**
04:15 PM	0	12	3	12	27	0	12	2	7	21	0	5	355	17	377	0	17	330	5	352	777
04:30 PM	0	**21**	7	13	41	0	15	6	12	33	0	**14**	326	**33**	373	0	13	311	10	334	781
04:45 PM	0	19	5	**21**	45	0	10	**7**	11	28	0	7	309	28	344	0	**20**	318	**11**	349	766
Total Volume	0	72	26	65	163	0	52	21	42	115	0	39	1387	102	1528	0	61	1294	34	1389	3195
% App. Total	0	44.2	16	39.9		0	45.2	18.3	36.5		0	2.6	90.8	6.7		0	4.4	93.2	2.4		
PHF	.000	.857	.591	.774	.815	.000	.867	.750	.875	.871	.000	.696	.873	.773	.880	.000	.763	.966	.773	.981	.917

Tamiami Trail/SW 8th Street & SW 70th Avenue

File Name : TMC-4 Tamiami Trail-SW 8th St & SW 70th Avenue
Site Code : 00000000
Start Date : 9/20/2018
Page No : 9

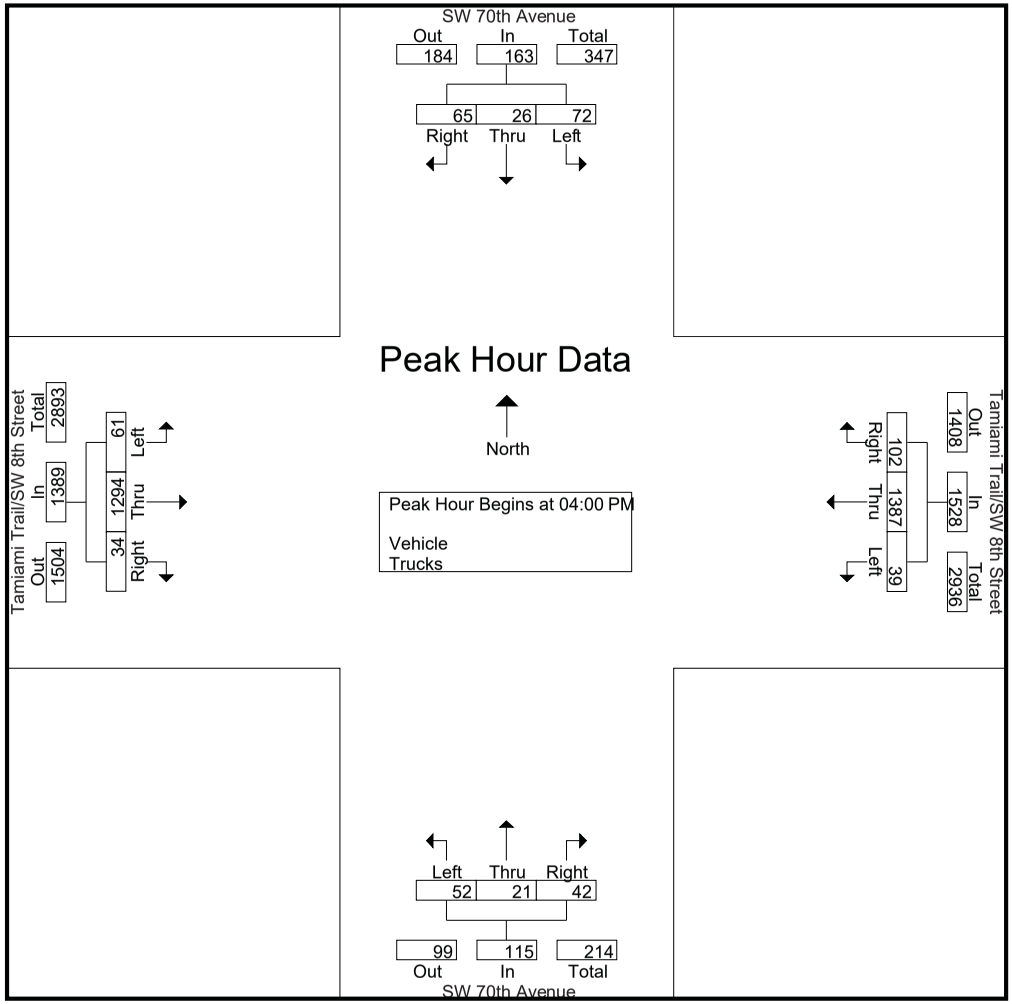

File Name: TMC-5 Tamiami Trail-SW 8th & SW 69th Avenue
Start Date: 9/20/2018
Start Time: 6:00:00 AM

	SW 69th Avenue Southbound				SW 69th Avenue Northbound			
Start Time	U-Turn	Left	Thru	Right	U-Turn	Left	Thru	Right
06:00 AM	0	2	1	8	0	1	1	3
06:15 AM	0	1	0	13	0	1	1	2
06:30 AM	0	1	0	8	0	4	0	1
06:45 AM	0	1	1	13	0	5	0	2
07:00 AM	0	1	0	18	0	1	0	4
07:15 AM	0	1	0	19	0	2	0	4
07:30 AM	0	1	0	16	0	1	1	3
07:45 AM	0	5	0	25	0	3	0	3
08:00 AM	0	5	0	12	0	4	4	2
08:15 AM	0	8	1	15	0	4	0	1
08:30 AM	0	4	0	15	0	4	0	3
08:45 AM	0	5	2	26	0	1	1	3
09:00 AM	0	0	0	0	0	0	0	0
09:15 AM	0	0	0	0	0	0	0	0
09:30 AM	0	0	0	0	0	0	0	0
09:45 AM	0	0	0	0	0	0	0	0
10:00 AM	0	0	0	0	0	0	0	0
10:15 AM	0	0	0	0	0	0	0	0
10:30 AM	0	0	0	0	0	0	0	0
10:45 AM	0	0	0	0	0	0	0	0
11:00 AM	0	0	0	0	0	0	0	0
11:15 AM	0	0	0	0	0	0	0	0
11:30 AM	0	2	2	16	0	1	2	2
11:45 AM	0	5	2	23	0	3	0	4
12:00 PM	0	1	1	23	0	1	1	7
12:15 PM	0	3	1	19	0	2	0	8
12:30 PM	0	3	1	32	0	7	0	4
12:45 PM	0	4	1	20	0	3	0	8
01:00 PM	0	2	0	24	0	6	0	4
01:15 PM	0	2	1	29	0	0	0	4
01:30 PM	0	0	0	0	0	0	0	0
01:45 PM	0	0	0	0	0	0	0	0
02:00 PM	0	0	0	0	0	0	0	0
02:15 PM	0	0	0	0	0	0	0	0
02:30 PM	0	0	0	0	0	0	0	0
02:45 PM	0	0	0	0	0	0	0	0
03:00 PM	0	0	0	0	0	0	0	0
03:15 PM	0	0	0	0	0	0	0	0
03:30 PM	0	0	0	0	0	0	0	0
03:45 PM	0	0	0	0	0	0	0	0
04:00 PM	0	1	0	23	0	0	3	4
04:15 PM	0	1	0	20	0	3	1	7
04:30 PM	0	1	4	21	0	4	0	6
04:45 PM	0	2	4	26	0	2	2	8
05:00 PM	0	0	1	25	0	8	1	5
05:15 PM	0	7	1	19	0	2	1	3
05:30 PM	0	0	1	13	0	2	3	6
05:45 PM	0	5	2	31	0	1	1	4
06:00 PM	0	1	1	19	0	2	0	5

06:15 PM	0	4	3	25	0	1	3	4
06:30 PM	0	3	4	26	0	1	0	4
06:45 PM	0	2	0	31	0	1	0	1

Tamiami Trail/SW 8th Street Westbound				Tamiami Trail/SW 8th Street Eastbound			
U-Turn	Left	Thru	Right	U-turn	Left	Thru	Right
0	2	179	4	1	4	244	8
0	2	230	7	0	8	321	6
0	1	261	6	0	8	325	10
0	0	252	7	1	16	407	8
0	3	247	5	0	11	447	4
0	1	329	5	0	20	393	1
0	1	319	5	0	21	378	1
0	3	348	2	0	17	366	5
0	3	297	8	0	15	394	4
0	1	303	10	0	16	332	3
0	4	327	6	0	18	377	3
0	1	315	5	0	19	396	5
0	0	0	0	0	0	0	0
0	0	0	0	0	0	0	0
0	0	0	0	0	0	0	0
0	0	0	0	0	0	0	0
0	0	0	0	0	0	0	0
0	0	0	0	0	0	0	0
0	0	0	0	0	0	0	0
0	0	0	0	0	0	0	0
0	0	0	0	0	0	0	0
0	0	0	0	0	0	0	0
0	0	347	7	1	12	313	4
0	1	307	8	0	16	335	7
0	3	291	9	0	9	268	8
0	1	335	7	0	13	319	3
0	3	317	4	0	7	310	5
0	3	343	4	0	5	329	6
0	0	347	10	0	8	338	3
1	0	336	4	0	5	330	9
0	0	0	0	0	0	0	0
0	0	0	0	0	0	0	0
0	0	0	0	0	0	0	0
0	0	0	0	0	0	0	0
0	0	0	0	0	0	0	0
0	0	0	0	0	0	0	0
0	0	0	0	0	0	0	0
0	0	0	0	0	0	0	0
0	0	0	0	0	0	0	0
0	0	0	0	0	0	0	0
0	1	389	8	0	11	369	2
0	2	337	8	0	9	332	4
0	3	303	3	0	13	310	5
0	1	286	1	0	10	344	1
0	1	292	7	0	14	348	7
0	0	207	2	0	8	359	5
0	0	247	0	0	19	328	3
0	2	228	2	0	12	279	7
0	3	244	7	0	9	356	5

0	1	298	1	0	13	302	2
0	3	308	6	0	19	305	5
0	4	275	4	0	20	316	9

File Name: TMC-5 Tamiami Trail-SW 8th & SW 69th Avenue
Start Date: 9/20/2018
Start Time: 6:00:00 AM

	SW 69th Avenue Southbound				SW 69th Avenue Northbound			
Start Time	U-Turns	Left	Thru	Right	U-Turns	Left	Thru	Right
06:00 AM	0	0	0	0	0	0	0	0
06:15 AM	0	0	0	0	0	1	0	0
06:30 AM	0	0	0	1	0	0	0	0
06:45 AM	0	0	0	1	0	1	0	0
07:00 AM	0	0	0	0	0	0	0	0
07:15 AM	0	0	0	2	0	0	0	3
07:30 AM	0	0	0	3	0	0	0	1
07:45 AM	0	0	0	2	0	0	0	0
08:00 AM	0	0	0	1	0	0	0	0
08:15 AM	0	0	0	0	0	0	0	0
08:30 AM	0	0	0	1	0	1	0	0
08:45 AM	0	0	0	2	0	0	0	0
09:00 AM	0	0	0	0	0	0	0	0
09:15 AM	0	0	0	0	0	0	0	0
09:30 AM	0	0	0	0	0	0	0	0
09:45 AM	0	0	0	0	0	0	0	0
10:00 AM	0	0	0	0	0	0	0	0
10:15 AM	0	0	0	0	0	0	0	0
10:30 AM	0	0	0	0	0	0	0	0
10:45 AM	0	0	0	0	0	0	0	0
11:00 AM	0	0	0	0	0	0	0	0
11:15 AM	0	0	0	0	0	0	0	0
11:30 AM	0	0	0	3	0	0	0	0
11:45 AM	0	0	0	0	0	0	0	0
12:00 PM	0	0	0	1	0	1	0	0
12:15 PM	0	0	0	1	0	0	0	0
12:30 PM	0	0	0	1	0	0	0	0
12:45 PM	0	0	0	1	0	0	0	1
01:00 PM	0	0	0	1	0	0	0	0
01:15 PM	0	0	0	1	0	0	0	0
01:30 PM	0	0	0	0	0	0	0	0
01:45 PM	0	0	0	0	0	0	0	0
02:00 PM	0	0	0	0	0	0	0	0
02:15 PM	0	0	0	0	0	0	0	0
02:30 PM	0	0	0	0	0	0	0	0
02:45 PM	0	0	0	0	0	0	0	0
03:00 PM	0	0	0	0	0	0	0	0
03:15 PM	0	0	0	0	0	0	0	0
03:30 PM	0	0	0	0	0	0	0	0
03:45 PM	0	0	0	0	0	0	0	0
04:00 PM	0	0	0	0	0	0	0	0
04:15 PM	0	0	0	1	0	0	0	0
04:30 PM	0	0	0	1	0	0	0	0
04:45 PM	0	0	0	1	0	0	0	0
05:00 PM	0	0	0	1	0	0	0	0
05:15 PM	0	0	0	0	0	0	0	0
05:30 PM	0	0	0	0	0	0	0	0
05:45 PM	0	0	0	1	0	0	0	0
06:00 PM	0	0	0	1	0	0	0	0

06:15 PM	0	0	0	1	0	0	0	0
06:30 PM	0	0	0	0	0	0	0	0
06:45 PM	0	0	0	1	0	0	0	0

Tamiami Trail/SW 8th Street Westbound				Tamiami Trail/SW 8th Street Eastbound			
U-Turns	Left	Thru	Right	U-Turns	Left	Thru	Right
0	0	0	0	0	0	4	1
0	0	0	0	0	0	12	0
0	0	5	0	0	1	7	0
0	0	3	1	0	0	7	0
0	0	5	0	0	0	7	0
0	0	3	0	0	1	10	1
0	0	5	0	0	1	8	0
0	0	5	0	0	0	9	0
0	1	7	0	0	0	8	0
0	0	8	1	0	0	6	0
0	0	5	1	0	0	4	2
0	0	5	0	0	0	3	0
0	0	0	0	0	0	0	0
0	0	0	0	0	0	0	0
0	0	0	0	0	0	0	0
0	0	0	0	0	0	0	0
0	0	0	0	0	0	0	0
0	0	0	0	0	0	0	0
0	0	0	0	0	0	0	0
0	0	0	0	0	0	0	0	
0	0	0	0	0	0	0	0
0	0	0	0	0	0	0	0
0	0	3	0	0	0	7	0
0	0	9	1	0	0	9	2
0	0	10	1	0	1	5	0
0	0	6	0	0	0	3	1
0	0	5	0	0	0	5	1
0	0	5	0	0	0	8	0
0	0	10	0	0	0	5	0
0	0	8	0	0	0	7	0
0	0	0	0	0	0	0	0
0	0	0	0	0	0	0	0
0	0	0	0	0	0	0	0
0	0	0	0	0	0	0	0
0	0	0	0	0	0	0	0
0	0	0	0	0	0	0	0
0	0	0	0	0	0	0	0
0	0	0	0	0	0	0	0
0	0	0	0	0	0	0	0
0	0	0	0	0	0	0	0
0	0	6	1	0	0	4	1
0	0	5	1	0	0	4	0
0	0	7	0	0	0	3	2
0	0	4	0	0	0	1	0
0	0	5	0	0	0	2	0
0	0	4	0	0	0	2	0
0	0	0	0	0	0	3	0
0	0	2	0	0	0	5	0
0	0	1	0	0	0	6	0

0	0	4	0	0	0	3	2
0	0	4	0	0	0	3	0
0	0	0	1	0	0	3	0

File Name: TMC-5 Tamiami Trail-SW 8th & SW 69th Avenue
Start Date: 9/20/2018
Start Time: 6:00:00 AM

	SW 69th Avenue Southbound		SW 69th Avenue Northbound		Tamiami Trail/SW 8th Street		Tamiami Trail/SW 8th Street	
Start Time	Peds	Bikes	Peds	Bikes	Peds	Bikes	Peds	Bikes
06:00 AM	0	0	0	0	0	0	0	0
06:15 AM	0	0	1	0	0	0	0	0
06:30 AM	0	0	0	0	0	0	0	0
06:45 AM	0	0	0	0	0	0	0	0
07:00 AM	0	0	0	0	0	0	0	0
07:15 AM	0	0	0	0	0	0	0	0
07:30 AM	0	0	0	0	0	0	0	0
07:45 AM	0	0	1	0	0	0	0	0
08:00 AM	0	0	1	0	1	0	2	0
08:15 AM	1	1	0	0	0	0	0	0
08:30 AM	0	0	0	0	0	0	0	0
08:45 AM	0	0	0	0	0	0	1	0
09:00 AM	0	0	0	0	0	0	0	0
09:15 AM	0	0	0	0	0	0	0	0
09:30 AM	0	0	0	0	0	0	0	0
09:45 AM	0	0	0	0	0	0	0	0
10:00 AM	0	0	0	0	0	0	0	0
10:15 AM	0	0	0	0	0	0	0	0
10:30 AM	0	0	0	0	0	0	0	0
10:45 AM	0	0	0	0	0	0	0	0
11:00 AM	0	0	0	0	0	0	0	0
11:15 AM	0	0	0	0	0	0	0	0
11:30 AM	0	0	0	0	0	0	0	0
11:45 AM	0	0	0	0	0	0	0	0
12:00 PM	0	0	0	0	0	0	0	0
12:15 PM	2	0	0	0	0	0	0	0
12:30 PM	0	0	0	0	0	0	0	0
12:45 PM	0	0	0	0	0	0	0	0
01:00 PM	0	0	0	0	0	0	0	0
01:15 PM	0	1	0	0	0	0	1	0
01:30 PM	0	0	0	0	0	0	0	0
01:45 PM	0	0	0	0	0	0	0	0
02:00 PM	0	0	0	0	0	0	0	0
02:15 PM	0	0	0	0	0	0	0	0
02:30 PM	0	0	0	0	0	0	0	0
02:45 PM	0	0	0	0	0	0	0	0
03:00 PM	0	0	0	0	0	0	0	0
03:15 PM	0	0	0	0	0	0	0	0
03:30 PM	0	0	0	0	0	0	0	0
03:45 PM	0	0	0	0	0	0	0	0
04:00 PM	0	0	0	0	1	0	1	0
04:15 PM	0	0	0	0	0	0	0	0
04:30 PM	1	0	0	1	0	0	0	0
04:45 PM	0	0	0	1	0	0	0	0
05:00 PM	0	1	0	1	1	0	1	0
05:15 PM	0	1	2	0	1	0	2	0
05:30 PM	0	1	0	0	0	0	1	0
05:45 PM	0	0	0	0	0	0	0	0
06:00 PM	1	0	0	0	0	0	0	0

06:15 PM	0	1	0	0	0	0	0	0
06:30 PM	0	0	0	0	0	0	0	0
06:45 PM	0	0	0	0	0	0	0	0

SW 12nd Street & SW 69th Avenue

File Name : TMC-6 SW 12nd Street & SW 69th Avenue
Site Code : 00000000
Start Date : 9/20/2018
Page No : 1

Groups Printed- Vehicle - Trucks

	SW 69th Avenue Southbound					SW 69th Avenue Northbound					SW 12nd Street Westbound					SW 12nd Street Eastbound					
Start Time	U-Turns	Left	Thru	Right	App. Total	U-Turns	Left	Thru	Right	App. Total	U-Turns	Left	Thru	Right	App. Total	U-Turns	Left	Thru	Right	App. Total	Int. Total
06:00 AM	0	0	0	1	1	0	1	1	2	4	0	0	4	1	5	0	0	4	0	4	14
06:15 AM	0	0	2	2	4	0	2	4	2	8	0	0	9	0	9	0	1	4	3	8	29
06:30 AM	0	0	0	6	6	0	6	4	0	10	0	0	8	2	10	0	3	10	3	16	42
06:45 AM	0	1	3	2	6	0	5	3	2	10	0	2	8	1	11	0	3	13	0	16	43
Total	0	1	5	11	17	0	14	12	6	32	0	2	29	4	35	0	7	31	6	44	128
07:00 AM	0	1	1	2	4	0	0	2	1	3	0	1	11	6	18	0	11	17	0	28	53
07:15 AM	0	1	2	12	15	0	5	4	3	12	0	0	25	0	25	0	5	22	2	29	81
07:30 AM	0	2	4	2	8	0	5	5	0	10	0	1	27	3	31	0	4	18	1	23	72
07:45 AM	0	1	1	1	3	0	7	6	1	14	0	1	33	0	34	0	4	24	0	28	79
Total	0	5	8	17	30	0	17	17	5	39	0	3	96	9	108	0	24	81	3	108	285
08:00 AM	0	3	1	5	9	0	10	6	2	18	0	1	32	4	37	0	4	30	8	42	106
08:15 AM	0	1	4	5	10	0	5	2	1	8	0	2	23	2	27	0	5	37	4	46	91
08:30 AM	0	1	2	6	9	0	2	4	5	11	0	1	20	2	23	0	5	27	3	35	78
08:45 AM	0	1	5	8	14	0	2	4	0	6	0	2	24	1	27	0	0	26	2	28	75
Total	0	6	12	24	42	0	19	16	8	43	0	6	99	9	114	0	14	120	17	151	350
*** BREAK ***																					
11:30 AM	0	3	5	9	17	0	4	2	1	7	0	1	20	3	24	0	5	18	1	24	72
11:45 AM	0	2	5	8	15	0	2	3	2	7	0	2	17	2	21	0	5	18	4	27	70
Total	0	5	10	17	32	0	6	5	3	14	0	3	37	5	45	0	10	36	5	51	142
12:00 PM	0	1	3	6	10	0	1	4	1	6	0	2	18	1	21	0	2	22	1	25	62
12:15 PM	0	0	2	6	8	0	1	1	0	2	0	1	33	3	37	0	1	20	2	23	70
12:30 PM	0	0	6	3	9	0	1	2	1	4	0	0	26	2	28	0	2	17	0	19	60
12:45 PM	0	0	2	7	9	0	1	4	1	6	0	2	34	2	38	0	2	17	4	23	76
Total	0	1	13	22	36	0	4	11	3	18	0	5	111	8	124	0	7	76	7	90	268
01:00 PM	0	1	5	3	9	0	2	2	1	5	0	1	29	5	35	0	3	26	5	34	83
01:15 PM	0	0	4	4	8	0	2	4	1	7	0	4	22	2	28	0	1	19	0	20	63
*** BREAK ***																					
Total	0	1	9	7	17	0	4	6	2	12	0	5	51	7	63	0	4	45	5	54	146

*** BREAK ***

SW 12nd Street & SW 69th Avenue

File Name : TMC-6 SW 12nd Street & SW 69th Avenue
Site Code : 00000000
Start Date : 9/20/2018
Page No : 2

Groups Printed- Vehicle - Trucks

	SW 69th Avenue Southbound					SW 69th Avenue Northbound					SW 12nd Street Westbound					SW 12nd Street Eastbound					
Start Time	U-Turns	Left	Thru	Right	App. Total	U-Turns	Left	Thru	Right	App. Total	U-Turns	Left	Thru	Right	App. Total	U-Turns	Left	Thru	Right	App. Total	Int. Total
04:00 PM	0	1	4	10	15	0	3	2	4	9	0	1	43	1	45	0	2	23	1	26	95
04:15 PM	0	1	2	4	7	0	2	0	3	5	0	2	35	4	41	0	3	18	1	22	75
04:30 PM	0	1	5	10	16	0	1	1	0	2	0	3	41	3	47	0	1	18	2	21	86
04:45 PM	0	0	7	14	21	0	0	2	1	3	0	1	37	2	40	0	3	18	3	24	88
Total	0	3	18	38	59	0	6	5	8	19	0	7	156	10	173	0	9	77	7	93	344
05:00 PM	0	0	18	18	36	0	6	4	2	12	0	1	55	3	59	0	1	22	2	25	132
05:15 PM	0	0	5	7	12	0	3	2	0	5	0	1	74	2	77	0	2	23	4	29	123
05:30 PM	0	2	4	8	14	0	2	3	1	6	0	2	61	2	65	0	4	22	3	29	114
05:45 PM	0	1	8	6	15	0	2	5	0	7	0	3	75	2	80	0	2	11	0	13	115
Total	0	3	35	39	77	0	13	14	3	30	0	7	265	9	281	0	9	78	9	96	484
06:00 PM	0	0	9	12	21	0	4	5	2	11	0	0	55	1	56	0	2	21	5	28	116
06:15 PM	0	1	6	6	13	0	3	5	0	8	0	0	40	2	42	0	1	13	3	17	80
06:30 PM	0	0	8	7	15	0	2	2	2	6	0	0	34	3	37	0	1	26	2	29	87
06:45 PM	0	0	7	5	12	0	4	0	0	4	0	1	31	1	33	0	2	17	3	22	71
Total	0	1	30	30	61	0	13	12	4	29	0	1	160	7	168	0	6	77	13	96	354
Grand Total	0	26	140	205	371	0	96	98	42	236	0	39	1004	68	1111	0	90	621	72	783	2501
Apprch %	0	7	37.7	55.3		0	40.7	41.5	17.8		0	3.5	90.4	6.1		0	11.5	79.3	9.2		
Total %	0	1	5.6	8.2	14.8	0	3.8	3.9	1.7	9.4	0	1.6	40.1	2.7	44.4	0	3.6	24.8	2.9	31.3	
Vehicle	0	21	136	188	345	0	96	95	40	231	0	37	983	64	1084	0	82	607	70	759	2419
% Vehicle	0	80.8	97.1	91.7	93	0	100	96.9	95.2	97.9	0	94.9	97.9	94.1	97.6	0	91.1	97.7	97.2	96.9	96.7
Trucks	0	5	4	17	26	0	0	3	2	5	0	2	21	4	27	0	8	14	2	24	82
% Trucks	0	19.2	2.9	8.3	7	0	0	3.1	4.8	2.1	0	5.1	2.1	5.9	2.4	0	8.9	2.3	2.8	3.1	3.3

SW 12nd Street & SW 69th Avenue

File Name : TMC-6 SW 12nd Street & SW 69th Avenue
Site Code : 00000000
Start Date : 9/20/2018
Page No : 3

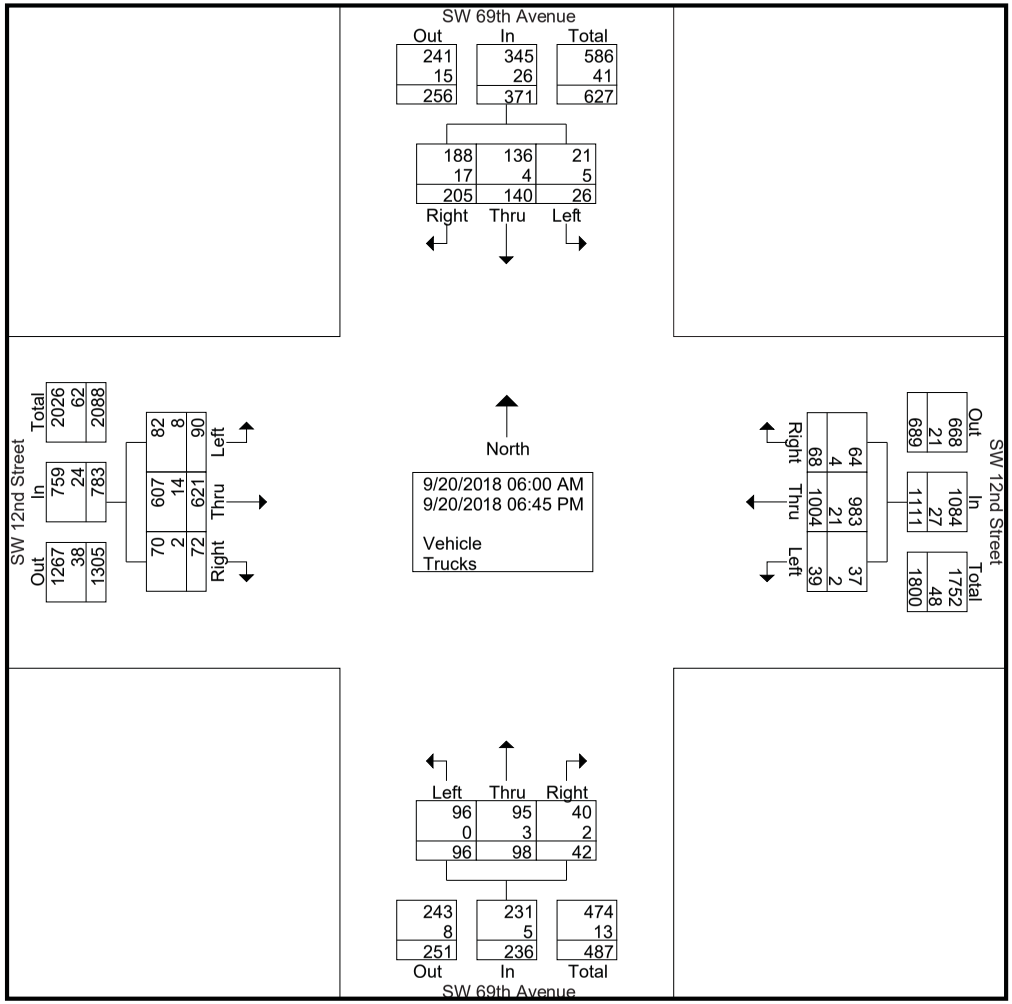

SW 12nd Street & SW 69th Avenue

File Name : TMC-6 SW 12nd Street & SW 69th Avenue
Site Code : 00000000
Start Date : 9/20/2018
Page No : 4

	SW 69th Avenue Southbound					SW 69th Avenue Northbound					SW 12nd Street Westbound					SW 12nd Street Eastbound					
Start Time	U-Turns	Left	Thru	Right	App. Total	U-Turns	Left	Thru	Right	App. Total	U-Turns	Left	Thru	Right	App. Total	U-Turns	Left	Thru	Right	App. Total	Int. Total
Peak Hour Analysis From 06:00 AM to 08:45 AM - Peak 1 of 1																					
Peak Hour for Entire Intersection Begins at 07:45 AM																					
07:45 AM	0	1	1	1	3	0	7	**6**	1	14	0	1	**33**	0	34	0	4	24	0	28	79
08:00 AM	0	**3**	1	5	9	0	**10**	6	2	**18**	0	1	32	**4**	**37**	0	4	30	**8**	42	**106**
08:15 AM	0	1	**4**	5	**10**	0	5	2	1	8	0	**2**	23	2	27	0	**5**	**37**	4	**46**	91
08:30 AM	0	1	2	**6**	9	0	2	4	**5**	11	0	1	20	2	23	0	5	27	3	35	78
Total Volume	0	6	8	17	31	0	24	18	9	51	0	5	108	8	121	0	18	118	15	151	354
% App. Total	0	19.4	25.8	54.8		0	47.1	35.3	17.6		0	4.1	89.3	6.6		0	11.9	78.1	9.9		
PHF	.000	.500	.500	.708	.775	.000	.600	.750	.450	.708	.000	.625	.818	.500	.818	.000	.900	.797	.469	.821	.835

SW 12nd Street & SW 69th Avenue

File Name : TMC-6 SW 12nd Street & SW 69th Avenue
Site Code : 00000000
Start Date : 9/20/2018
Page No : 5

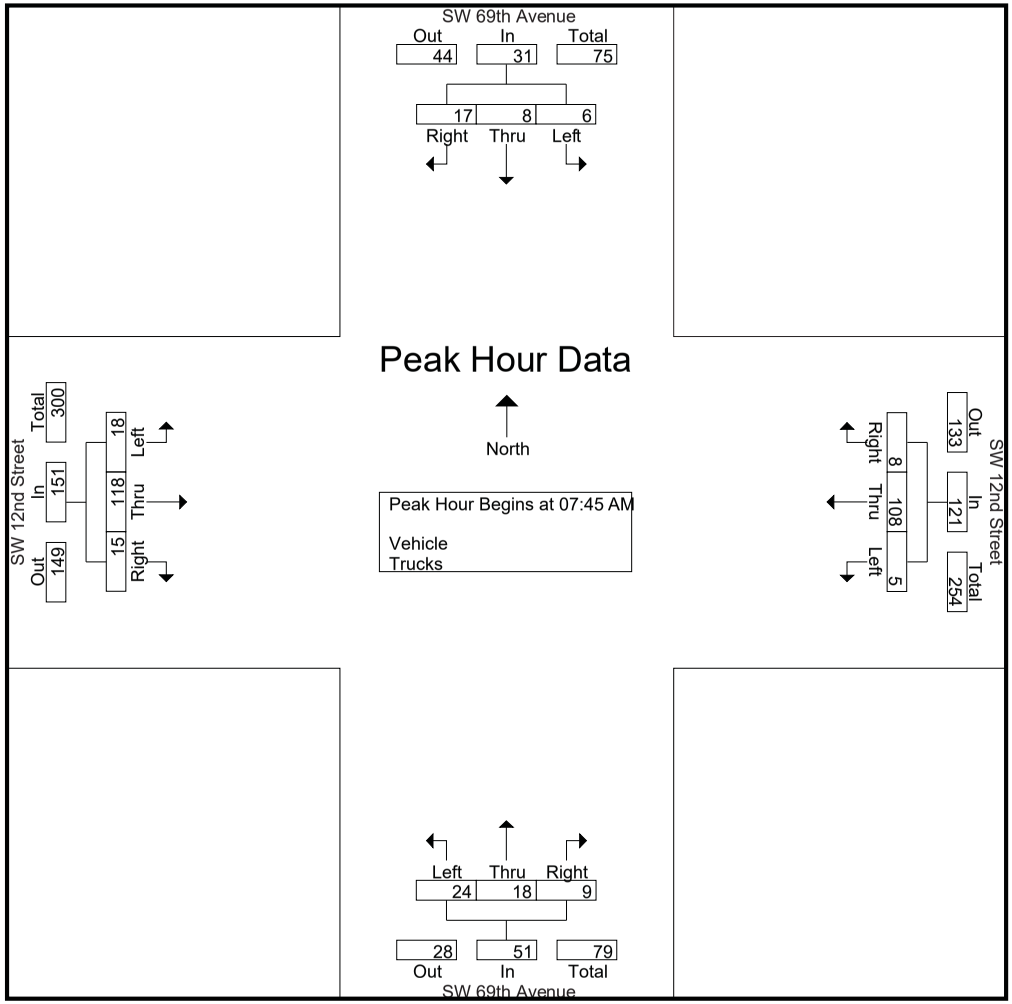

SW 12nd Street & SW 69th Avenue

File Name : TMC-6 SW 12nd Street & SW 69th Avenue
Site Code : 00000000
Start Date : 9/20/2018
Page No : 6

	SW 69th Avenue Southbound					SW 69th Avenue Northbound					SW 12nd Street Westbound					SW 12nd Street Eastbound					
Start Time	U-Turns	Left	Thru	Right	App. Total	U-Turns	Left	Thru	Right	App. Total	U-Turns	Left	Thru	Right	App. Total	U-Turns	Left	Thru	Right	App. Total	Int. Total
Peak Hour Analysis From 11:30 AM to 01:15 PM - Peak 1 of 1																					
Peak Hour for Entire Intersection Begins at 12:15 PM																					
12:15 PM	0	0	2	6	8	0	1	1	0	2	0	1	33	3	37	0	1	20	2	23	70
12:30 PM	0	0	**6**	3	**9**	0	1	2	**1**	4	0	0	26	2	28	0	2	17	0	19	60
12:45 PM	0	0	2	**7**	9	0	1	**4**	1	**6**	0	**2**	**34**	2	**38**	0	2	17	4	23	76
01:00 PM	0	**1**	5	3	9	0	**2**	2	1	5	0	1	29	**5**	35	0	**3**	**26**	**5**	**34**	**83**
Total Volume	0	1	15	19	35	0	5	9	3	17	0	4	122	12	138	0	8	80	11	99	289
% App. Total	0	2.9	42.9	54.3		0	29.4	52.9	17.6		0	2.9	88.4	8.7		0	8.1	80.8	11.1		
PHF	.000	.250	.625	.679	.972	.000	.625	.563	.750	.708	.000	.500	.897	.600	.908	.000	.667	.769	.550	.728	.870

SW 12nd Street & SW 69th Avenue

File Name : TMC-6 SW 12nd Street & SW 69th Avenue
Site Code : 00000000
Start Date : 9/20/2018
Page No : 7

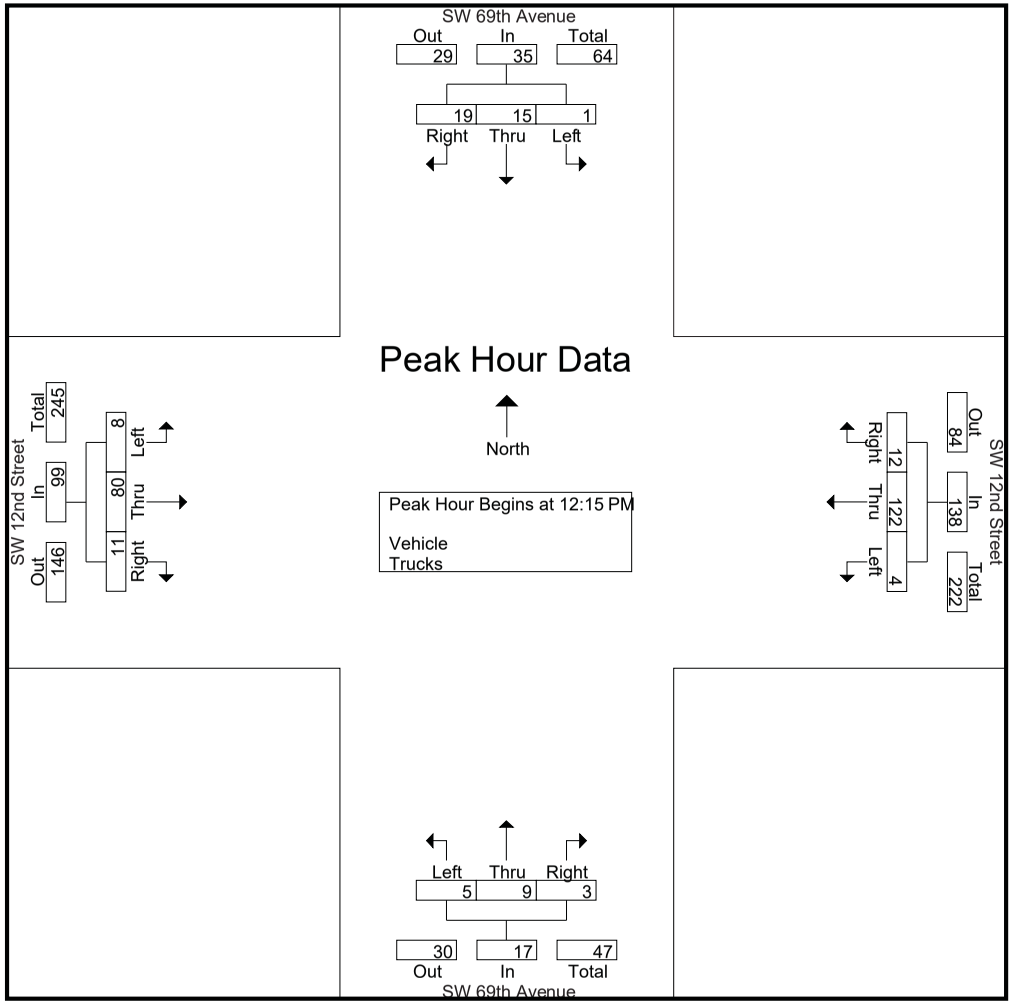

SW 12nd Street & SW 69th Avenue

File Name : TMC-6 SW 12nd Street & SW 69th Avenue
Site Code : 00000000
Start Date : 9/20/2018
Page No : 8

	SW 69th Avenue Southbound					SW 69th Avenue Northbound					SW 12nd Street Westbound					SW 12nd Street Eastbound					
Start Time	U-Turns	Left	Thru	Right	App. Total	U-Turns	Left	Thru	Right	App. Total	U-Turns	Left	Thru	Right	App. Total	U-Turns	Left	Thru	Right	App. Total	Int. Total
Peak Hour Analysis From 04:00 PM to 06:45 PM - Peak 1 of 1																					
Peak Hour for Entire Intersection Begins at 05:00 PM																					
05:00 PM	0	0	**18**	**18**	**36**	0	**6**	4	**2**	**12**	0	1	55	**3**	59	0	1	22	2	25	**132**
05:15 PM	0	0	5	7	12	0	3	2	0	5	0	1	74	2	77	0	2	**23**	**4**	**29**	123
05:30 PM	0	**2**	4	8	14	0	2	3	1	6	0	2	61	2	65	0	**4**	22	3	29	114
05:45 PM	0	1	8	6	15	0	2	**5**	0	7	0	**3**	**75**	2	**80**	0	2	11	0	13	115
Total Volume	0	3	35	39	77	0	13	14	3	30	0	7	265	9	281	0	9	78	9	96	484
% App. Total	0	3.9	45.5	50.6		0	43.3	46.7	10		0	2.5	94.3	3.2		0	9.4	81.2	9.4		
PHF	.000	.375	.486	.542	.535	.000	.542	.700	.375	.625	.000	.583	.883	.750	.878	.000	.563	.848	.563	.828	.917

SW 12nd Street & SW 69th Avenue

File Name : TMC-6 SW 12nd Street & SW 69th Avenue
Site Code : 00000000
Start Date : 9/20/2018
Page No : 9

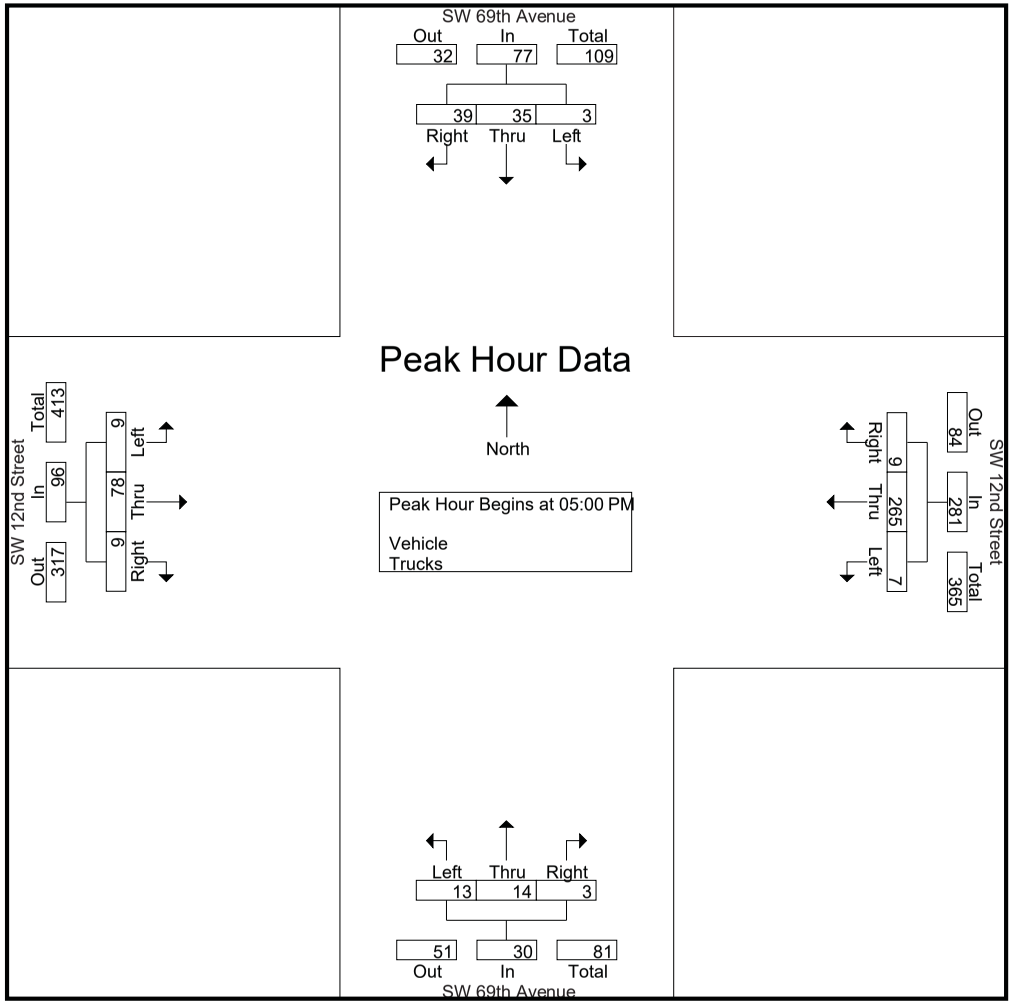

SW 12nd Street & SW 70th Avenue

File Name : TMC-7 SW 12nd Street & SW 70th Avenue
Site Code : 00000000
Start Date : 9/20/2018
Page No : 1

Groups Printed- Vehicle - Trucks

	SW 70th Avenue Southbound					SW 70th Avenue Northbound					SW 12nd Street Westbound					SW 12nd Street Eastbound					
Start Time	U-Turns	Left	Thru	Right	App. Total	U-Turns	Left	Thru	Right	App. Total	U-Turns	Left	Thru	Right	App. Total	U-Turns	Left	Thru	Right	App. Total	Int. Total
06:00 AM	0	0	4	0	4	0	4	8	2	14	0	0	4	2	6	0	1	1	0	2	26
06:15 AM	0	1	6	0	7	0	0	5	1	6	0	4	5	5	14	0	0	7	1	8	35
06:30 AM	0	1	7	2	10	0	2	6	3	11	0	2	15	2	19	0	0	13	1	14	54
06:45 AM	0	0	4	0	4	0	4	11	4	19	0	2	8	4	14	0	2	11	2	15	52
Total	0	2	21	2	25	0	10	30	10	50	0	8	32	13	53	0	3	32	4	39	167
07:00 AM	0	2	2	0	4	0	2	15	10	27	0	0	11	4	15	0	0	14	4	18	64
07:15 AM	0	3	5	1	9	0	3	14	9	26	0	2	34	6	42	0	3	17	4	24	101
07:30 AM	0	0	7	1	8	0	4	19	4	27	0	5	24	6	35	0	3	20	3	26	96
07:45 AM	0	1	4	1	6	0	1	19	2	22	0	5	30	6	41	0	0	25	6	31	100
Total	0	6	18	3	27	0	10	67	25	102	0	12	99	22	133	0	6	76	17	99	361
08:00 AM	0	1	8	3	12	0	7	17	7	31	0	5	30	11	46	0	3	34	3	40	129
08:15 AM	0	5	8	2	15	0	3	18	5	26	0	4	23	5	32	0	0	39	4	43	116
08:30 AM	0	2	4	1	7	0	2	21	5	28	0	4	19	4	27	0	0	27	6	33	95
08:45 AM	0	2	9	4	15	0	0	16	5	21	0	4	24	6	34	0	4	21	3	28	98
Total	0	10	29	10	49	0	12	72	22	106	0	17	96	26	139	0	7	121	16	144	438
*** BREAK ***																					
11:30 AM	0	3	11	2	16	0	3	12	2	17	0	5	16	10	31	0	2	20	2	24	88
11:45 AM	0	4	14	2	20	0	3	7	4	14	0	5	11	12	28	0	1	15	6	22	84
Total	0	7	25	4	36	0	6	19	6	31	0	10	27	22	59	0	3	35	8	46	172
12:00 PM	0	3	12	3	18	0	0	14	4	18	0	3	19	4	26	0	2	15	3	20	82
12:15 PM	0	3	11	4	18	0	2	15	3	20	0	5	25	7	37	0	4	17	2	23	98
12:30 PM	0	1	9	0	10	0	1	14	5	20	0	4	22	7	33	0	3	11	5	19	82
12:45 PM	0	3	9	3	15	0	5	18	6	29	0	7	20	8	35	0	2	12	7	21	100
Total	0	10	41	10	61	0	8	61	18	87	0	19	86	26	131	0	11	55	17	83	362
01:00 PM	0	4	5	3	12	0	3	10	11	24	0	7	22	7	36	0	1	20	3	24	96
01:15 PM	0	1	13	1	15	0	4	16	4	24	0	2	19	8	29	0	3	15	4	22	90
*** BREAK ***																					
Total	0	5	18	4	27	0	7	26	15	48	0	9	41	15	65	0	4	35	7	46	186

*** BREAK ***

SW 12nd Street & SW 70th Avenue

File Name : TMC-7 SW 12nd Street & SW 70th Avenue
Site Code : 00000000
Start Date : 9/20/2018
Page No : 2

Groups Printed- Vehicle - Trucks

	SW 70th Avenue Southbound					SW 70th Avenue Northbound					SW 12nd Street Westbound					SW 12nd Street Eastbound					
Start Time	U-Turns	Left	Thru	Right	App. Total	U-Turns	Left	Thru	Right	App. Total	U-Turns	Left	Thru	Right	App. Total	U-Turns	Left	Thru	Right	App. Total	Int. Total
04:00 PM	0	4	19	5	28	0	4	13	2	19	0	3	47	7	57	0	1	21	2	24	128
04:15 PM	0	3	10	3	16	0	3	14	3	20	0	5	27	9	41	0	3	16	2	21	98
04:30 PM	0	3	13	2	18	0	2	15	1	18	0	7	38	8	53	0	1	17	2	20	109
04:45 PM	0	4	14	0	18	0	6	17	2	25	0	3	42	8	53	0	0	18	3	21	117
Total	0	14	56	10	80	0	15	59	8	82	0	18	154	32	204	0	5	72	9	86	452
05:00 PM	0	4	14	2	20	0	5	16	6	27	0	11	55	10	76	0	0	16	5	21	144
05:15 PM	0	5	17	4	26	0	2	13	2	17	0	5	67	9	81	0	2	21	5	28	152
05:30 PM	0	5	15	3	23	0	3	12	5	20	0	9	59	9	77	0	3	19	1	23	143
05:45 PM	0	0	11	7	18	0	4	10	1	15	0	6	69	9	84	0	2	12	1	15	132
Total	0	14	57	16	87	0	14	51	14	79	0	31	250	37	318	0	7	68	12	87	571
06:00 PM	0	3	10	5	18	0	6	11	10	27	0	9	58	6	73	0	0	14	5	19	137
06:15 PM	0	2	11	4	17	0	4	11	4	19	0	6	38	4	48	0	1	10	3	14	98
06:30 PM	0	6	13	3	22	0	6	6	4	16	0	5	31	5	41	0	0	20	5	25	104
06:45 PM	0	1	8	2	11	0	1	2	1	4	0	2	36	3	41	0	0	15	1	16	72
Total	0	12	42	14	68	0	17	30	19	66	0	22	163	18	203	0	1	59	14	74	411
Grand Total	0	80	307	73	460	0	99	415	137	651	0	146	948	211	1305	0	47	553	104	704	3120
Apprch %	0	17.4	66.7	15.9		0	15.2	63.7	21		0	11.2	72.6	16.2		0	6.7	78.6	14.8		
Total %	0	2.6	9.8	2.3	14.7	0	3.2	13.3	4.4	20.9	0	4.7	30.4	6.8	41.8	0	1.5	17.7	3.3	22.6	
Vehicle	0	78	303	70	451	0	97	403	134	634	0	142	930	206	1278	0	46	547	102	695	3058
% Vehicle	0	97.5	98.7	95.9	98	0	98	97.1	97.8	97.4	0	97.3	98.1	97.6	97.9	0	97.9	98.9	98.1	98.7	98
Trucks	0	2	4	3	9	0	2	12	3	17	0	4	18	5	27	0	1	6	2	9	62
% Trucks	0	2.5	1.3	4.1	2	0	2	2.9	2.2	2.6	0	2.7	1.9	2.4	2.1	0	2.1	1.1	1.9	1.3	2

SW 12nd Street & SW 70th Avenue

File Name : TMC-7 SW 12nd Street & SW 70th Avenue
Site Code : 00000000
Start Date : 9/20/2018
Page No : 3

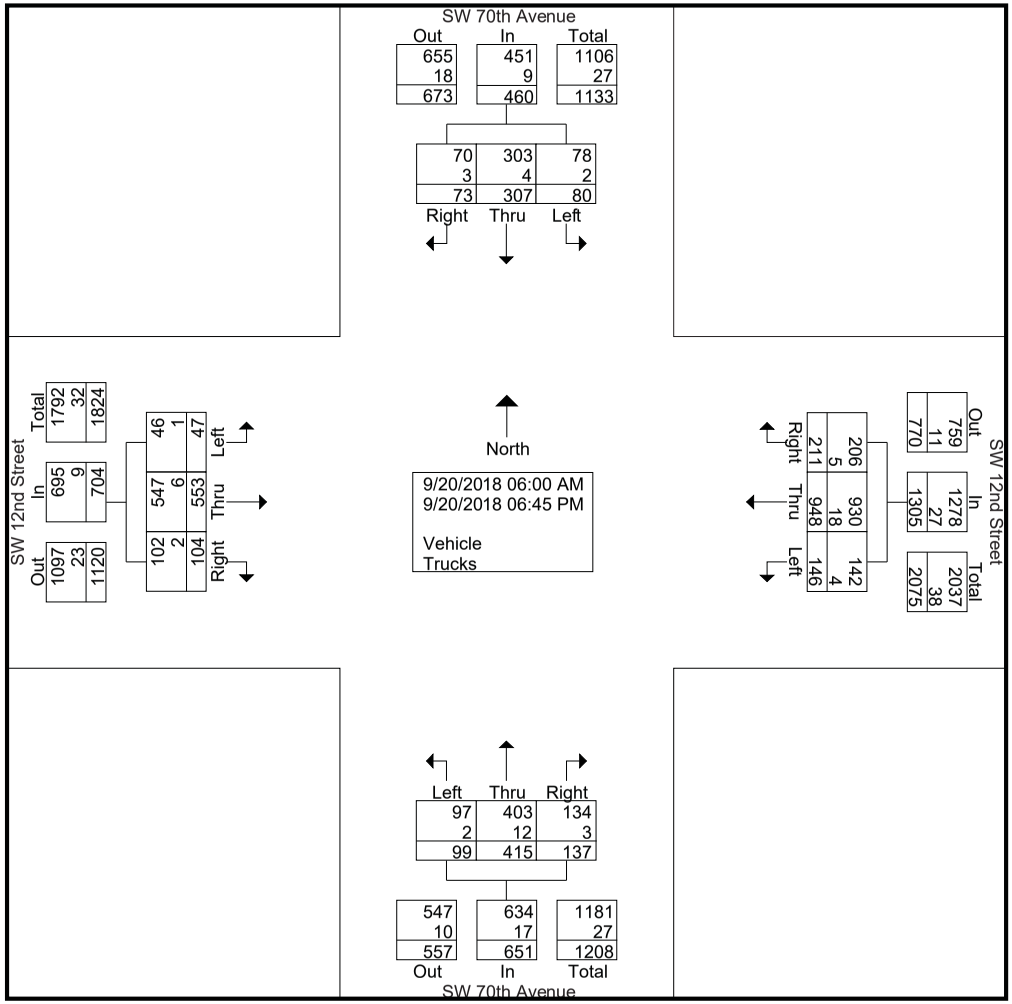

SW 12nd Street & SW 70th Avenue

File Name : TMC-7 SW 12nd Street & SW 70th Avenue
Site Code : 00000000
Start Date : 9/20/2018
Page No : 4

	SW 70th Avenue Southbound					SW 70th Avenue Northbound					SW 12nd Street Westbound					SW 12nd Street Eastbound					
Start Time	U-Turns	Left	Thru	Right	App. Total	U-Turns	Left	Thru	Right	App. Total	U-Turns	Left	Thru	Right	App. Total	U-Turns	Left	Thru	Right	App. Total	Int. Total
Peak Hour Analysis From 06:00 AM to 08:45 AM - Peak 1 of 1																					
Peak Hour for Entire Intersection Begins at 07:30 AM																					
07:30 AM	0	0	7	1	8	0	4	**19**	4	27	0	**5**	24	6	35	0	**3**	20	3	26	96
07:45 AM	0	1	4	1	6	0	1	19	2	22	0	5	**30**	6	41	0	0	25	**6**	31	100
08:00 AM	0	1	**8**	**3**	12	0	**7**	17	**7**	**31**	0	5	30	**11**	**46**	0	3	34	3	40	**129**
08:15 AM	0	**5**	8	2	**15**	0	3	18	5	26	0	4	23	5	32	0	0	**39**	4	**43**	116
Total Volume	0	7	27	7	41	0	15	73	18	106	0	19	107	28	154	0	6	118	16	140	441
% App. Total	0	17.1	65.9	17.1		0	14.2	68.9	17		0	12.3	69.5	18.2		0	4.3	84.3	11.4		
PHF	.000	.350	.844	.583	.683	.000	.536	.961	.643	.855	.000	.950	.892	.636	.837	.000	.500	.756	.667	.814	.855

SW 12nd Street & SW 70th Avenue

File Name : TMC-7 SW 12nd Street & SW 70th Avenue
Site Code : 00000000
Start Date : 9/20/2018
Page No : 5

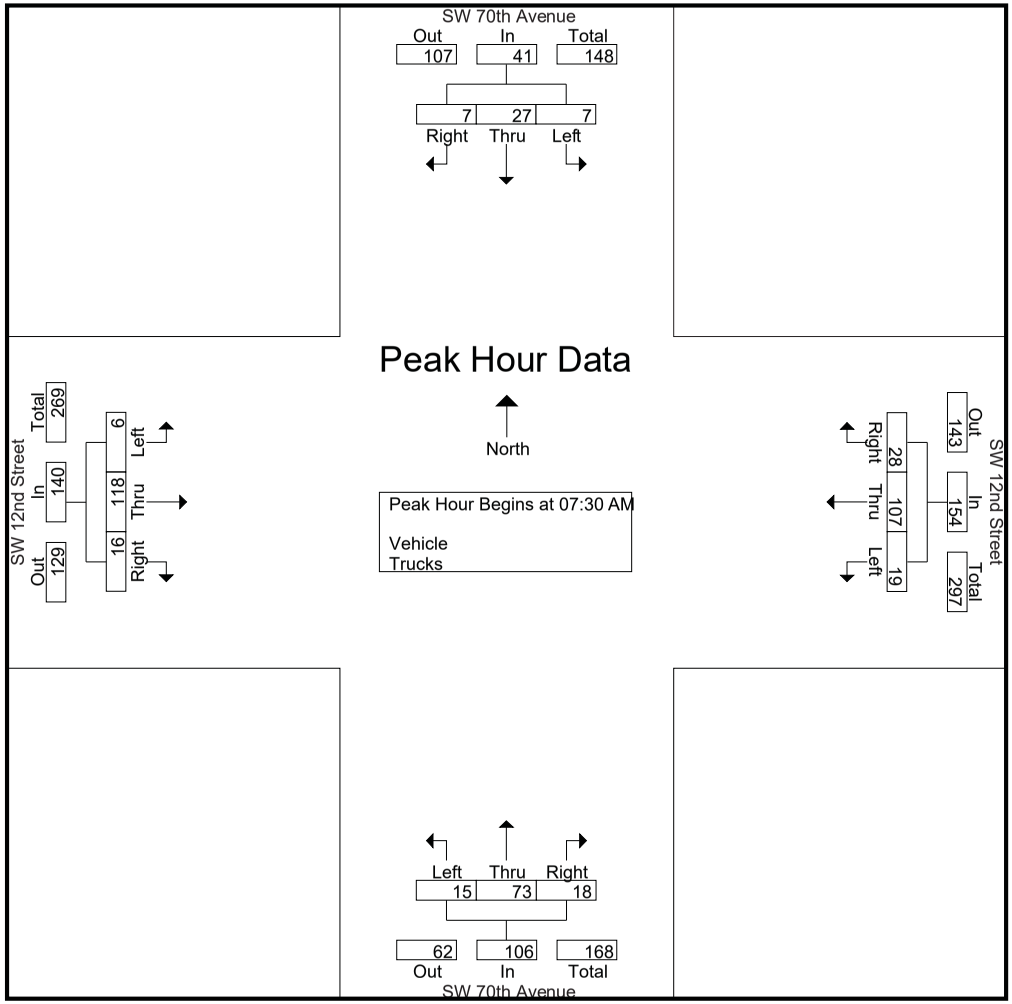

SW 12nd Street & SW 70th Avenue

File Name : TMC-7 SW 12nd Street & SW 70th Avenue
Site Code : 00000000
Start Date : 9/20/2018
Page No : 6

	SW 70th Avenue Southbound					SW 70th Avenue Northbound					SW 12nd Street Westbound					SW 12nd Street Eastbound					
Start Time	U-Turns	Left	Thru	Right	App. Total	U-Turns	Left	Thru	Right	App. Total	U-Turns	Left	Thru	Right	App. Total	U-Turns	Left	Thru	Right	App. Total	Int. Total
Peak Hour Analysis From 11:30 AM to 01:15 PM - Peak 1 of 1																					
Peak Hour for Entire Intersection Begins at 12:15 PM																					
12:15 PM	0	3	**11**	**4**	**18**	0	2	15	3	20	0	5	**25**	7	**37**	0	**4**	17	2	23	98
12:30 PM	0	1	9	0	10	0	1	14	5	20	0	4	22	7	33	0	3	11	5	19	82
12:45 PM	0	3	9	3	15	0	**5**	**18**	6	**29**	0	**7**	20	**8**	35	0	2	12	**7**	21	**100**
01:00 PM	0	**4**	5	3	12	0	3	10	**11**	24	0	7	22	7	36	0	1	**20**	3	**24**	96
Total Volume	0	11	34	10	55	0	11	57	25	93	0	23	89	29	141	0	10	60	17	87	376
% App. Total	0	20	61.8	18.2		0	11.8	61.3	26.9		0	16.3	63.1	20.6		0	11.5	69	19.5		
PHF	.000	.688	.773	.625	.764	.000	.550	.792	.568	.802	.000	.821	.890	.906	.953	.000	.625	.750	.607	.906	.940

SW 12nd Street & SW 70th Avenue

File Name : TMC-7 SW 12nd Street & SW 70th Avenue
Site Code : 00000000
Start Date : 9/20/2018
Page No : 7

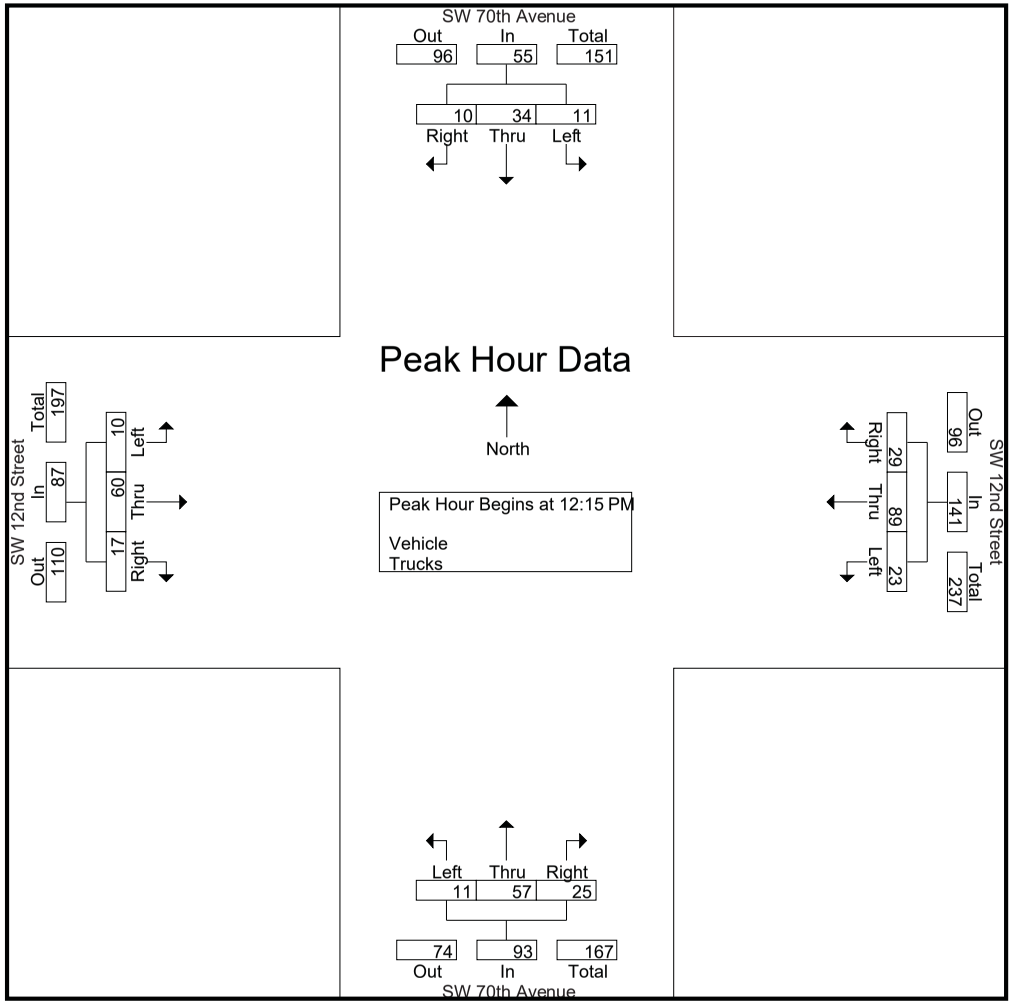

SW 12nd Street & SW 70th Avenue

File Name : TMC-7 SW 12nd Street & SW 70th Avenue
Site Code : 00000000
Start Date : 9/20/2018
Page No : 8

	SW 70th Avenue Southbound					SW 70th Avenue Northbound					SW 12nd Street Westbound					SW 12nd Street Eastbound					
Start Time	U-Turns	Left	Thru	Right	App. Total	U-Turns	Left	Thru	Right	App. Total	U-Turns	Left	Thru	Right	App. Total	U-Turns	Left	Thru	Right	App. Total	Int. Total
Peak Hour Analysis From 04:00 PM to 06:45 PM - Peak 1 of 1																					
Peak Hour for Entire Intersection Begins at 05:00 PM																					
05:00 PM	0	4	14	2	20	0	**5**	**16**	**6**	**27**	0	**11**	55	**10**	76	0	0	16	**5**	21	144
05:15 PM	0	**5**	**17**	4	**26**	0	2	13	2	17	0	5	67	9	81	0	2	**21**	5	**28**	**152**
05:30 PM	0	5	15	3	23	0	3	12	5	20	0	9	59	9	77	0	**3**	19	1	23	143
05:45 PM	0	0	11	**7**	18	0	4	10	1	15	0	6	**69**	9	**84**	0	2	12	1	15	132
Total Volume	0	14	57	16	87	0	14	51	14	79	0	31	250	37	318	0	7	68	12	87	571
% App. Total	0	16.1	65.5	18.4		0	17.7	64.6	17.7		0	9.7	78.6	11.6		0	8	78.2	13.8		
PHF	.000	.700	.838	.571	.837	.000	.700	.797	.583	.731	.000	.705	.906	.925	.946	.000	.583	.810	.600	.777	.939

SW 12nd Street & SW 70th Avenue

File Name : TMC-7 SW 12nd Street & SW 70th Avenue
Site Code : 00000000
Start Date : 9/20/2018
Page No : 9

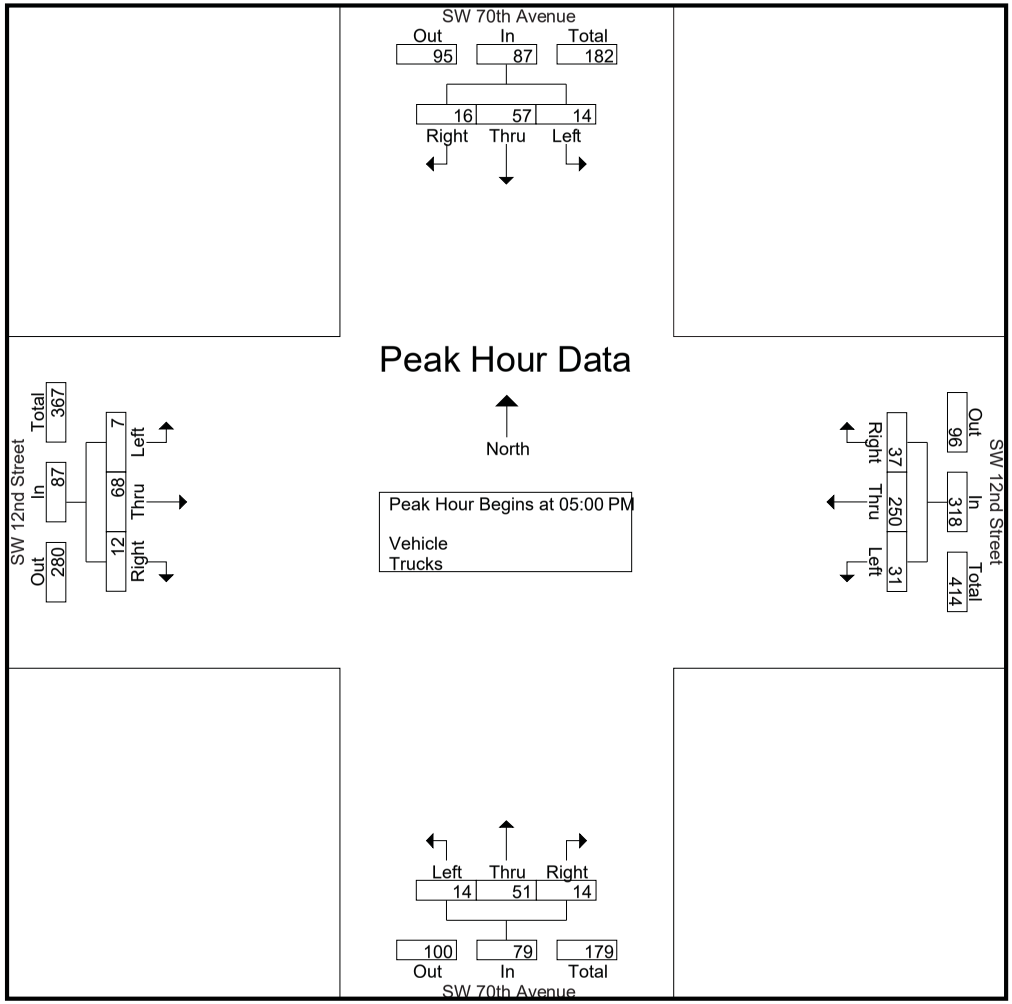

SW 16th Street & SW 70th Avenue

File Name : TMC-8 SW 16th Street & SW 70th Avenue
Site Code : 00000000
Start Date : 9/20/2018
Page No : 1

Groups Printed- Vehicle - Trucks

	SW 70th Avenue Southbound					SW 70th Avenue Northbound					SW 16th Street Westbound					SW 16th Street Eastbound					
Start Time	U-Turns	Left	Thru	Right	App. Total	U-Turns	Left	Thru	Right	App. Total	U-Turns	Left	Thru	Right	App. Total	U-Turns	Left	Thru	Right	App. Total	Int. Total
06:00 AM	0	0	1	2	3	0	0	4	6	10	0	2	14	0	16	0	3	14	0	17	46
06:15 AM	0	1	3	1	5	0	1	3	8	12	0	2	11	1	14	0	0	15	1	16	47
06:30 AM	0	0	2	1	3	0	2	4	8	14	0	2	28	2	32	0	2	30	0	32	81
06:45 AM	0	7	2	0	9	0	1	10	8	19	0	9	41	3	53	0	3	29	2	34	115
Total	0	8	8	4	20	0	4	21	30	55	0	15	94	6	115	0	8	88	3	99	289
07:00 AM	0	3	4	0	7	0	2	11	24	37	0	9	30	4	43	0	2	49	0	51	138
07:15 AM	0	4	4	0	8	0	3	13	22	38	0	8	39	3	50	0	2	70	2	74	170
07:30 AM	0	5	6	1	12	0	0	12	32	44	0	8	61	8	77	0	5	66	0	71	204
07:45 AM	0	4	3	0	7	0	3	15	32	50	0	15	57	5	77	0	4	89	2	95	229
Total	0	16	17	1	34	0	8	51	110	169	0	40	187	20	247	0	13	274	4	291	741
08:00 AM	0	5	8	2	15	0	0	17	29	46	0	14	46	7	67	0	2	81	2	85	213
08:15 AM	0	4	8	3	15	0	3	14	38	55	0	14	58	5	77	0	3	68	2	73	220
08:30 AM	0	7	10	1	18	0	5	11	33	49	0	11	60	5	76	0	2	86	2	90	233
08:45 AM	0	3	4	1	8	0	1	13	26	40	0	8	62	6	76	0	3	75	1	79	203
Total	0	19	30	7	56	0	9	55	126	190	0	47	226	23	296	0	10	310	7	327	869
*** BREAK ***																					
11:30 AM	0	3	4	2	9	0	0	11	23	34	0	8	27	3	38	0	1	27	0	28	109
11:45 AM	0	12	7	1	20	0	2	9	6	17	0	9	29	3	41	0	2	29	2	33	111
Total	0	15	11	3	29	0	2	20	29	51	0	17	56	6	79	0	3	56	2	61	220
12:00 PM	0	10	9	2	21	0	2	8	16	26	0	5	39	6	50	0	0	23	2	25	122
12:15 PM	0	3	3	1	7	0	1	12	16	29	0	8	39	7	54	0	1	20	1	22	112
12:30 PM	0	2	5	4	11	0	3	12	9	24	0	9	43	1	53	0	1	23	3	27	115
12:45 PM	0	6	6	2	14	0	0	15	11	26	0	12	40	8	60	0	1	29	1	31	131
Total	0	21	23	9	53	0	6	47	52	105	0	34	161	22	217	0	3	95	7	105	480
01:00 PM	0	6	8	2	16	0	1	11	12	24	0	12	36	8	56	0	0	20	2	22	118
01:15 PM	0	7	7	1	15	0	2	11	19	32	0	8	48	9	65	0	3	35	1	39	151
*** BREAK ***																					
Total	0	13	15	3	31	0	3	22	31	56	0	20	84	17	121	0	3	55	3	61	269

*** BREAK ***

SW 16th Street & SW 70th Avenue

File Name : TMC-8 SW 16th Street & SW 70th Avenue
Site Code : 00000000
Start Date : 9/20/2018
Page No : 2

Groups Printed- Vehicle - Trucks

	SW 70th Avenue Southbound					SW 70th Avenue Northbound					SW 16th Street Westbound					SW 16th Street Eastbound					
Start Time	U-Turns	Left	Thru	Right	App. Total	U-Turns	Left	Thru	Right	App. Total	U-Turns	Left	Thru	Right	App. Total	U-Turns	Left	Thru	Right	App. Total	Int. Total
04:00 PM	0	2	16	5	23	0	3	14	15	32	0	14	85	5	104	0	2	51	5	58	217
04:15 PM	0	4	8	1	13	0	2	12	15	29	0	18	92	6	116	0	2	22	5	29	187
04:30 PM	0	11	9	1	21	0	1	8	19	28	0	14	116	7	137	0	1	31	3	35	221
04:45 PM	0	4	7	3	14	0	2	9	16	27	0	21	106	8	135	0	2	32	2	36	212
Total	0	21	40	10	71	0	8	43	65	116	0	67	399	26	492	0	7	136	15	158	837
05:00 PM	0	5	20	3	28	0	1	11	13	25	0	32	98	5	135	0	2	34	2	38	226
05:15 PM	0	3	12	2	17	0	4	7	18	29	0	25	114	6	145	0	0	29	0	29	220
05:30 PM	0	7	9	3	19	0	6	10	16	32	0	27	115	6	148	0	0	36	4	40	239
05:45 PM	0	5	8	2	15	0	3	9	20	32	0	29	108	5	142	0	0	24	3	27	216
Total	0	20	49	10	79	0	14	37	67	118	0	113	435	22	570	0	2	123	9	134	901
06:00 PM	0	3	17	6	26	0	1	9	10	20	0	21	114	9	144	0	1	45	5	51	241
06:15 PM	0	4	14	4	22	0	1	9	17	27	0	17	103	7	127	0	1	22	5	28	204
06:30 PM	0	9	8	6	23	0	2	10	15	27	0	12	93	6	111	0	0	23	4	27	188
06:45 PM	0	5	9	2	16	0	3	8	11	22	0	13	80	3	96	0	0	21	5	26	160
Total	0	21	48	18	87	0	7	36	53	96	0	63	390	25	478	0	2	111	19	132	793
Grand Total	0	154	241	65	460	0	61	332	563	956	0	416	2032	167	2615	0	51	1248	69	1368	5399
Apprch %	0	33.5	52.4	14.1		0	6.4	34.7	58.9		0	15.9	77.7	6.4		0	3.7	91.2	5		
Total %	0	2.9	4.5	1.2	8.5	0	1.1	6.1	10.4	17.7	0	7.7	37.6	3.1	48.4	0	0.9	23.1	1.3	25.3	
Vehicle	0	150	239	62	451	0	61	319	554	934	0	411	2007	160	2578	0	50	1243	69	1362	5325
% Vehicle	0	97.4	99.2	95.4	98	0	100	96.1	98.4	97.7	0	98.8	98.8	95.8	98.6	0	98	99.6	100	99.6	98.6
Trucks	0	4	2	3	9	0	0	13	9	22	0	5	25	7	37	0	1	5	0	6	74
% Trucks	0	2.6	0.8	4.6	2	0	0	3.9	1.6	2.3	0	1.2	1.2	4.2	1.4	0	2	0.4	0	0.4	1.4

SW 16th Street & SW 70th Avenue

File Name : TMC-8 SW 16th Street & SW 70th Avenue
Site Code : 00000000
Start Date : 9/20/2018
Page No : 3

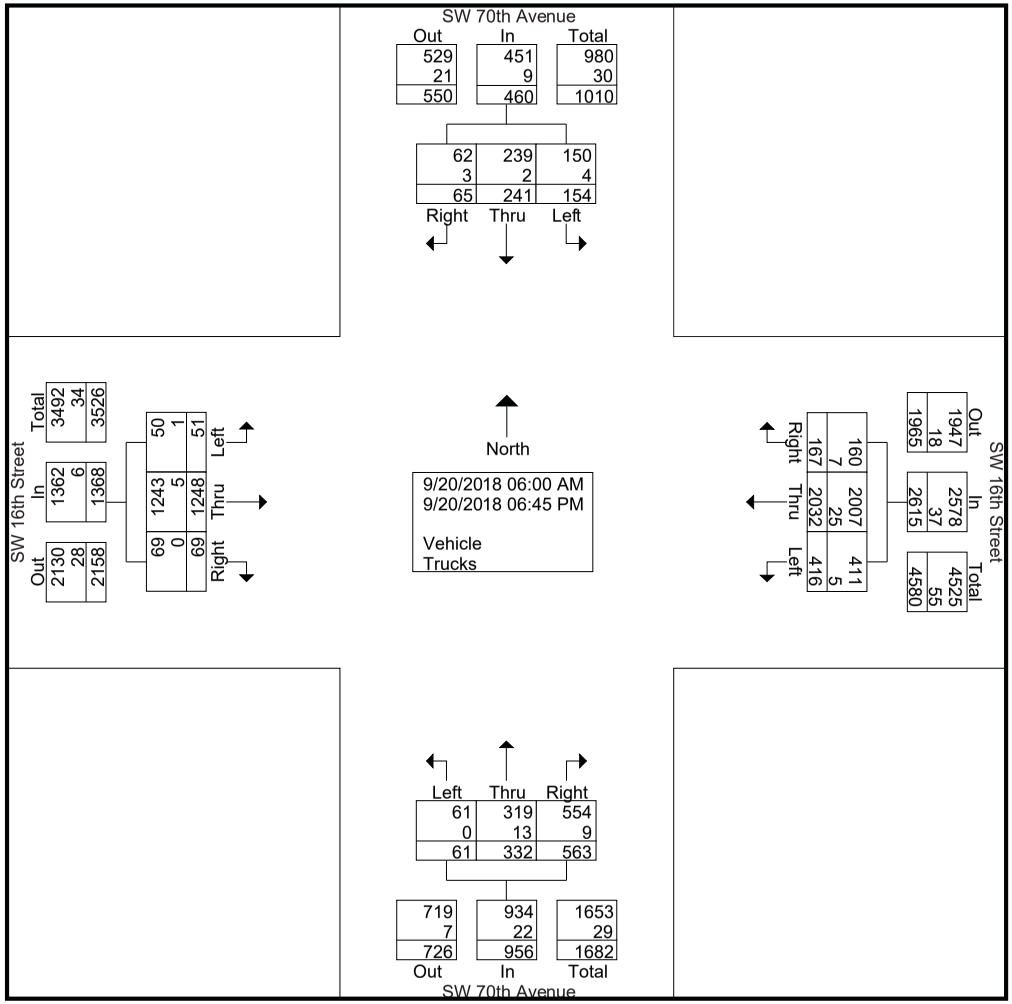

SW 16th Street & SW 70th Avenue

File Name : TMC-8 SW 16th Street & SW 70th Avenue
Site Code : 00000000
Start Date : 9/20/2018
Page No : 4

	SW 70th Avenue Southbound					SW 70th Avenue Northbound					SW 16th Street Westbound					SW 16th Street Eastbound					
Start Time	U-Turns	Left	Thru	Right	App. Total	U-Turns	Left	Thru	Right	App. Total	U-Turns	Left	Thru	Right	App. Total	U-Turns	Left	Thru	Right	App. Total	Int. Total
Peak Hour Analysis From 06:00 AM to 08:45 AM - Peak 1 of 1																					
Peak Hour for Entire Intersection Begins at 07:45 AM																					
07:45 AM	0	4	3	0	7	0	3	15	32	50	0	**15**	57	5	**77**	0	**4**	**89**	**2**	**95**	229
08:00 AM	0	5	8	2	15	0	0	**17**	29	46	0	14	46	**7**	67	0	2	81	2	85	213
08:15 AM	0	4	8	**3**	15	0	3	14	**38**	**55**	0	14	58	5	77	0	3	68	2	73	220
08:30 AM	0	**7**	**10**	1	**18**	0	**5**	11	33	49	0	11	**60**	5	76	0	2	86	2	90	**233**
Total Volume	0	20	29	6	55	0	11	57	132	200	0	54	221	22	297	0	11	324	8	343	895
% App. Total	0	36.4	52.7	10.9		0	5.5	28.5	66		0	18.2	74.4	7.4		0	3.2	94.5	2.3		
PHF	.000	.714	.725	.500	.764	.000	.550	.838	.868	.909	.000	.900	.921	.786	.964	.000	.688	.910	1.00	.903	.960

SW 16th Street & SW 70th Avenue

File Name : TMC-8 SW 16th Street & SW 70th Avenue
Site Code : 00000000
Start Date : 9/20/2018
Page No : 5

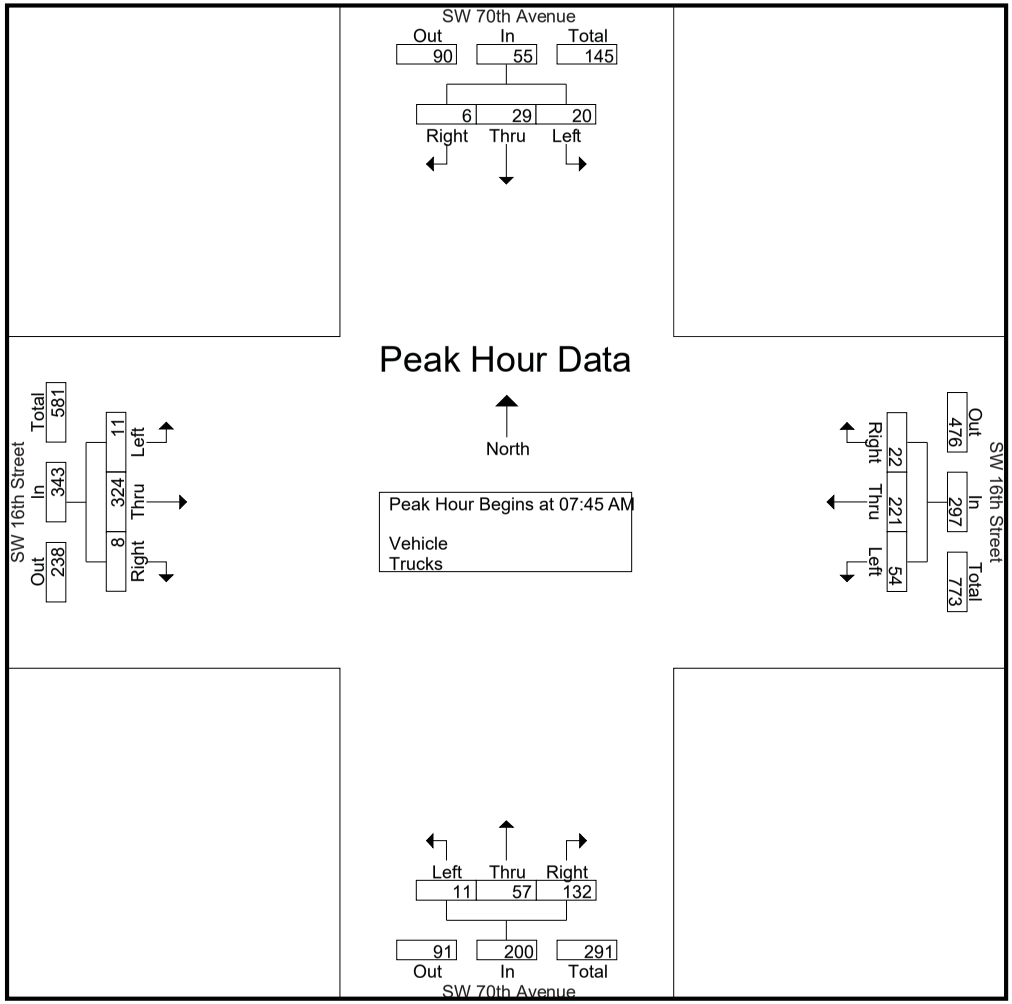

SW 16th Street & SW 70th Avenue

File Name : TMC-8 SW 16th Street & SW 70th Avenue
Site Code : 00000000
Start Date : 9/20/2018
Page No : 6

	SW 70th Avenue Southbound					SW 70th Avenue Northbound					SW 16th Street Westbound					SW 16th Street Eastbound					
Start Time	U-Turns	Left	Thru	Right	App. Total	U-Turns	Left	Thru	Right	App. Total	U-Turns	Left	Thru	Right	App. Total	U-Turns	Left	Thru	Right	App. Total	Int. Total
Peak Hour Analysis From 11:30 AM to 01:15 PM - Peak 1 of 1																					
Peak Hour for Entire Intersection Begins at 12:30 PM																					
12:30 PM	0	2	5	**4**	11	0	**3**	12	9	24	0	9	43	1	53	0	1	23	**3**	27	115
12:45 PM	0	6	6	2	14	0	0	**15**	11	26	0	**12**	40	8	60	0	1	29	1	31	131
01:00 PM	0	6	**8**	2	**16**	0	1	11	12	24	0	12	36	8	56	0	0	20	2	22	118
01:15 PM	0	**7**	7	1	15	0	2	11	**19**	**32**	0	8	**48**	**9**	**65**	0	**3**	**35**	1	**39**	**151**
Total Volume	0	21	26	9	56	0	6	49	51	106	0	41	167	26	234	0	5	107	7	119	515
% App. Total	0	37.5	46.4	16.1		0	5.7	46.2	48.1		0	17.5	71.4	11.1		0	4.2	89.9	5.9		
PHF	.000	.750	.813	.563	.875	.000	.500	.817	.671	.828	.000	.854	.870	.722	.900	.000	.417	.764	.583	.763	.853

SW 16th Street & SW 70th Avenue

File Name : TMC-8 SW 16th Street & SW 70th Avenue
Site Code : 00000000
Start Date : 9/20/2018
Page No : 7

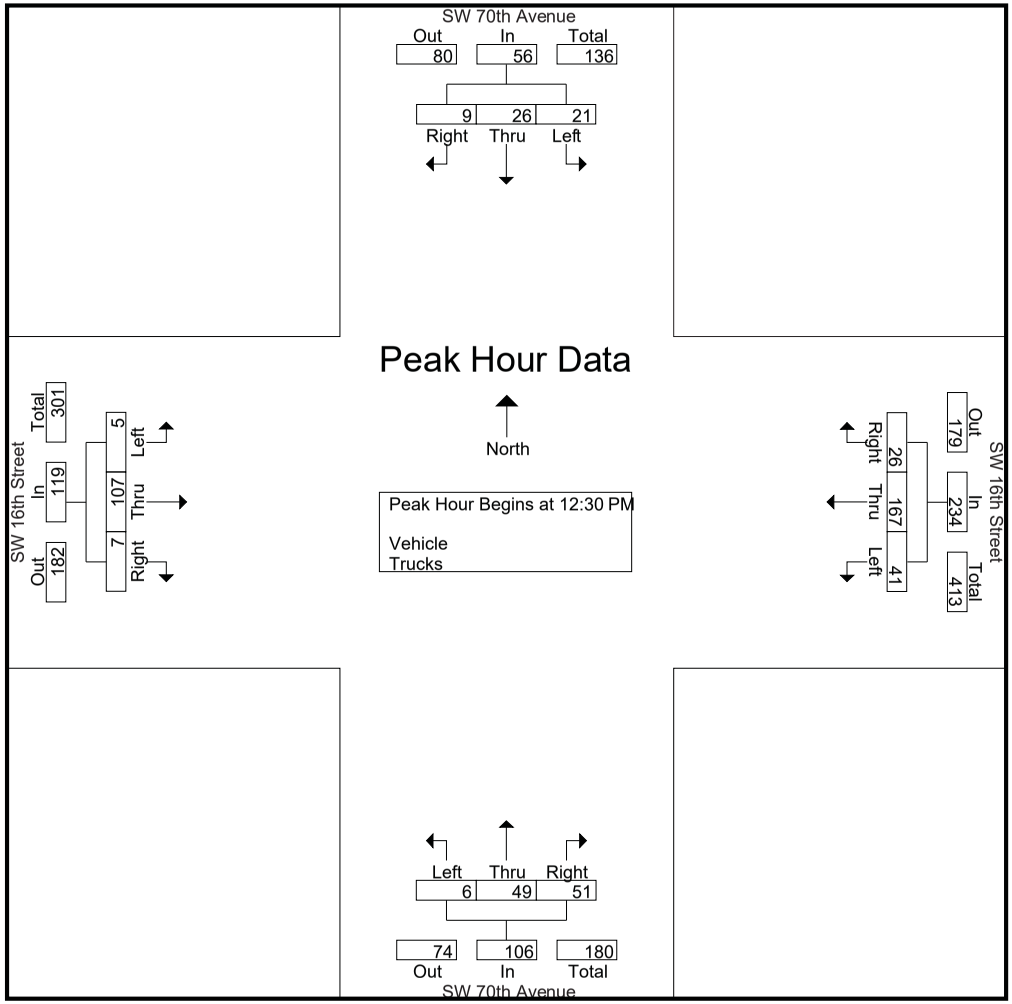

SW 16th Street & SW 70th Avenue

File Name : TMC-8 SW 16th Street & SW 70th Avenue
Site Code : 00000000
Start Date : 9/20/2018
Page No : 8

	SW 70th Avenue Southbound					SW 70th Avenue Northbound					SW 16th Street Westbound					SW 16th Street Eastbound					
Start Time	U-Turns	Left	Thru	Right	App. Total	U-Turns	Left	Thru	Right	App. Total	U-Turns	Left	Thru	Right	App. Total	U-Turns	Left	Thru	Right	App. Total	Int. Total
Peak Hour Analysis From 04:00 PM to 06:45 PM - Peak 1 of 1																					
Peak Hour for Entire Intersection Begins at 05:15 PM																					
05:15 PM	0	3	12	2	17	0	4	7	18	29	0	25	114	6	145	0	0	29	0	29	220
05:30 PM	0	**7**	9	3	19	0	**6**	**10**	16	**32**	0	27	**115**	6	**148**	0	0	36	4	40	239
05:45 PM	0	5	8	2	15	0	3	9	**20**	32	0	**29**	108	5	142	0	0	24	3	27	216
06:00 PM	0	3	**17**	**6**	**26**	0	1	9	10	20	0	21	114	**9**	144	0	**1**	**45**	**5**	**51**	**241**
Total Volume	0	18	46	13	77	0	14	35	64	113	0	102	451	26	579	0	1	134	12	147	916
% App. Total	0	23.4	59.7	16.9		0	12.4	31	56.6		0	17.6	77.9	4.5		0	0.7	91.2	8.2		
PHF	.000	.643	.676	.542	.740	.000	.583	.875	.800	.883	.000	.879	.980	.722	.978	.000	.250	.744	.600	.721	.950

SW 16th Street & SW 70th Avenue

File Name : TMC-8 SW 16th Street & SW 70th Avenue
Site Code : 00000000
Start Date : 9/20/2018
Page No : 9

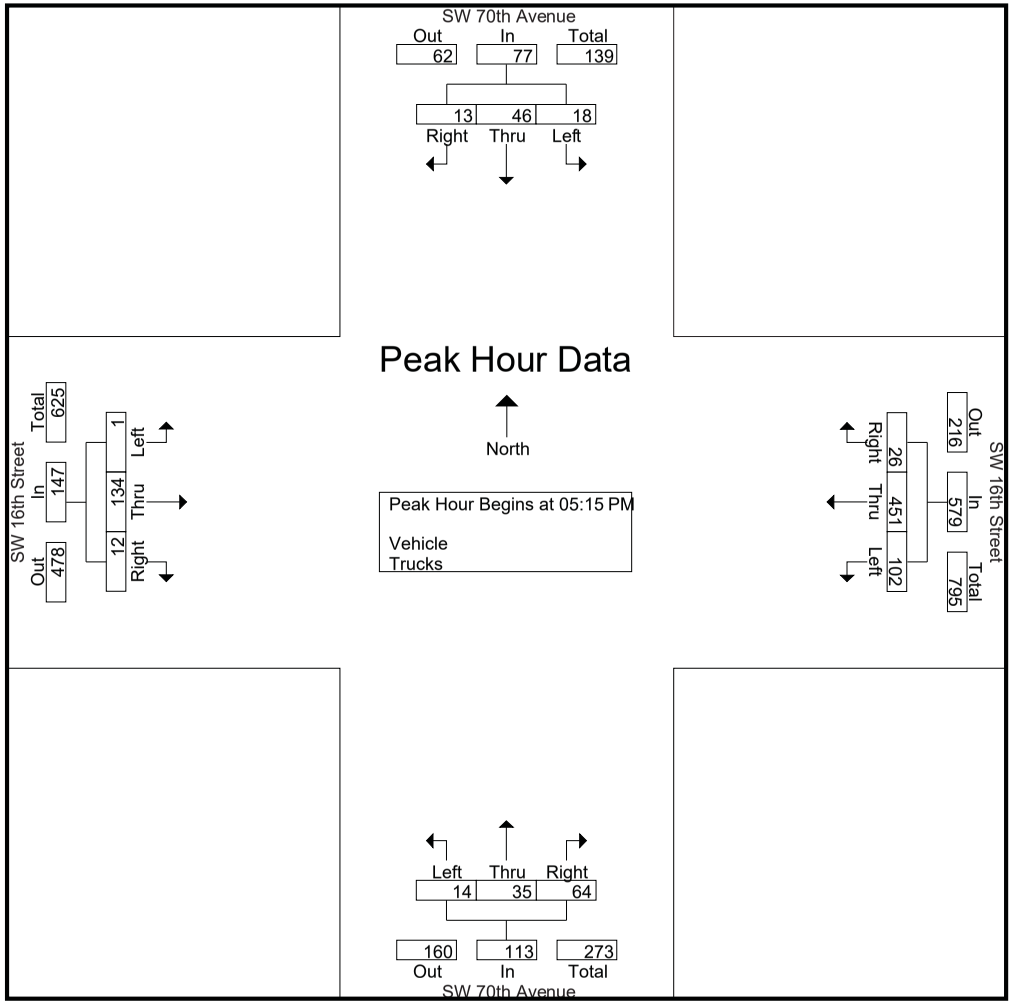

SW 24th Street & SW 70th Avenue

File Name : TMC-9 SW 24th Street & SW 70th Court
Site Code : 00000000
Start Date : 9/18/2018
Page No : 1

Groups Printed- Vehicle - Trucks

	SW 70th Court Southbound					SW 70th Court Northbound					SW 24th Street Westbound					SW 24th Street Eastbound					
Start Time	U-Turns	Left	Thru	Right	App. Total	U-Turns	Left	Thru	Right	App. Total	U-Turns	Left	Thru	Right	App. Total	U-Turns	Left	Thru	Right	App. Total	Int. Total
06:00 AM	0	1	0	7	8	0	0	0	0	0	0	0	105	5	110	0	1	172	0	173	291
06:15 AM	0	0	0	8	8	0	0	0	0	0	0	0	137	5	142	0	1	258	0	259	409
06:30 AM	0	4	0	1	5	0	0	0	0	0	0	0	194	3	197	0	0	340	0	340	542
06:45 AM	0	2	0	7	9	0	0	0	1	1	1	0	204	4	209	0	1	384	0	385	604
Total	0	7	0	23	30	0	0	0	1	1	1	0	640	17	658	0	3	1154	0	1157	1846
07:00 AM	0	0	0	4	4	0	0	0	0	0	1	0	244	4	249	0	1	457	0	458	711
07:15 AM	0	0	0	4	4	0	0	0	0	0	1	0	236	2	239	0	2	381	0	383	626
07:30 AM	0	2	1	2	5	0	0	0	0	0	0	1	247	1	249	0	3	370	0	373	627
07:45 AM	0	2	0	4	6	0	0	0	0	0	0	2	237	2	241	0	1	395	0	396	643
Total	0	4	1	14	19	0	0	0	0	0	2	3	964	9	978	0	7	1603	0	1610	2607
08:00 AM	0	4	0	6	10	0	1	0	0	1	0	0	257	9	266	0	2	368	0	370	647
08:15 AM	0	0	0	4	4	0	0	0	0	0	0	1	282	5	288	0	0	373	1	374	666
08:30 AM	0	1	0	5	6	0	2	0	0	2	0	7	281	9	297	0	1	395	1	397	702
08:45 AM	0	3	0	3	6	0	1	0	0	1	0	5	297	2	304	0	1	401	0	402	713
Total	0	8	0	18	26	0	4	0	0	4	0	13	1117	25	1155	0	4	1537	2	1543	2728
*** BREAK ***																					
11:30 AM	0	4	0	6	10	0	5	1	0	6	0	5	303	16	324	0	4	331	1	336	676
11:45 AM	0	4	0	5	9	0	2	0	0	2	2	4	295	4	305	0	5	329	1	335	651
Total	0	8	0	11	19	0	7	1	0	8	2	9	598	20	629	0	9	660	2	671	1327
12:00 PM	0	5	0	7	12	0	4	0	0	4	0	7	257	9	273	0	10	335	3	348	637
12:15 PM	0	3	0	4	7	0	4	0	1	5	0	3	330	19	352	0	3	372	3	378	742
12:30 PM	0	5	0	3	8	0	4	0	1	5	0	4	295	10	309	2	3	363	3	371	693
12:45 PM	0	3	0	3	6	0	6	0	1	7	2	3	271	11	287	1	4	347	4	356	656
Total	0	16	0	17	33	0	18	0	3	21	2	17	1153	49	1221	3	20	1417	13	1453	2728
01:00 PM	0	5	0	5	10	0	1	0	3	4	0	5	305	12	322	0	7	383	5	395	731
01:15 PM	0	6	0	5	11	0	2	0	0	2	0	5	310	10	325	0	4	359	5	368	706
*** BREAK ***																					
01:45 PM	0	3	0	3	6	0	4	0	1	5	0	4	289	9	302	0	4	301	5	310	623
Total	0	14	0	13	27	0	7	0	4	11	0	14	904	31	949	0	15	1043	15	1073	2060
02:00 PM	0	1	0	5	6	0	9	1	1	11	0	2	286	8	296	0	1	309	2	312	625
02:15 PM	0	1	0	2	3	0	4	0	1	5	0	5	294	5	304	0	0	312	3	315	627
02:30 PM	0	1	0	3	4	0	1	0	0	1	0	1	324	8	333	0	4	319	1	324	662
02:45 PM	0	6	0	3	9	0	1	0	0	1	0	6	297	10	313	1	8	343	3	355	678
Total	0	9	0	13	22	0	15	1	2	18	0	14	1201	31	1246	1	13	1283	9	1306	2592

SW 24th Street & SW 70th Avenue

File Name : TMC-9 SW 24th Street & SW 70th Court
Site Code : 00000000
Start Date : 9/18/2018
Page No : 2

Groups Printed- Vehicle - Trucks

	SW 70th Court Southbound					SW 70th Court Northbound					SW 24th Street Westbound					SW 24th Street Eastbound					
Start Time	U-Turns	Left	Thru	Right	App. Total	U-Turns	Left	Thru	Right	App. Total	U-Turns	Left	Thru	Right	App. Total	U-Turns	Left	Thru	Right	App. Total	Int. Total
03:00 PM	0	3	0	4	7	0	3	0	2	5	0	1	294	10	305	0	4	300	2	306	623
03:15 PM	0	2	0	3	5	0	1	0	1	2	0	5	301	6	312	1	6	313	1	321	640
*** BREAK ***																					
Total	0	5	0	7	12	0	4	0	3	7	0	6	595	16	617	1	10	613	3	627	1263
04:00 PM	0	9	0	2	11	0	3	0	0	3	1	2	299	14	316	0	9	314	1	324	654
04:15 PM	0	5	0	3	8	0	4	2	2	8	1	3	323	9	336	0	6	346	3	355	707
04:30 PM	0	4	0	4	8	0	2	1	2	5	0	4	325	5	334	0	4	372	3	379	726
04:45 PM	0	2	0	0	2	0	6	0	1	7	0	3	308	4	315	0	4	297	3	304	628
Total	0	20	0	9	29	0	15	3	5	23	2	12	1255	32	1301	0	23	1329	10	1362	2715
05:00 PM	0	2	0	2	4	0	1	0	1	2	0	1	306	5	312	0	2	341	3	346	664
05:15 PM	0	3	0	6	9	0	0	0	1	1	0	2	305	17	324	0	5	339	5	349	683
05:30 PM	0	1	0	3	4	0	6	0	0	6	0	3	319	8	330	0	11	291	3	305	645
05:45 PM	0	4	1	2	7	0	2	0	2	4	0	1	289	8	298	0	5	303	2	310	619
Total	0	10	1	13	24	0	9	0	4	13	0	7	1219	38	1264	0	23	1274	13	1310	2611
06:00 PM	0	1	1	2	4	0	2	0	1	3	0	0	294	13	307	0	6	298	4	308	622
06:15 PM	0	2	0	2	4	0	7	0	2	9	0	1	351	5	357	0	4	290	2	296	666
06:30 PM	0	1	0	3	4	0	3	1	0	4	0	6	357	4	367	0	7	307	3	317	692
06:45 PM	0	2	0	1	3	0	8	0	0	8	0	9	366	7	382	0	2	327	2	331	724
Total	0	6	1	8	15	0	20	1	3	24	0	16	1368	29	1413	0	19	1222	11	1252	2704
Grand Total	0	107	3	146	256	0	99	6	25	130	9	111	11014	297	11431	5	146	13135	78	13364	25181
Apprch %	0	41.8	1.2	57		0	76.2	4.6	19.2		0.1	1	96.4	2.6		0	1.1	98.3	0.6		
Total %	0	0.4	0	0.6	1	0	0.4	0	0.1	0.5	0	0.4	43.7	1.2	45.4	0	0.6	52.2	0.3	53.1	
Vehicle	0	103	3	145	251	0	98	6	21	125	9	106	10783	293	11191	5	138	12948	77	13168	24735
% Vehicle	0	96.3	100	99.3	98	0	99	100	84	96.2	100	95.5	97.9	98.7	97.9	100	94.5	98.6	98.7	98.5	98.2
Trucks	0	4	0	1	5	0	1	0	4	5	0	5	231	4	240	0	8	187	1	196	446
% Trucks	0	3.7	0	0.7	2	0	1	0	16	3.8	0	4.5	2.1	1.3	2.1	0	5.5	1.4	1.3	1.5	1.8

SW 24th Street & SW 70th Avenue

File Name : TMC-9 SW 24th Street & SW 70th Court
Site Code : 00000000
Start Date : 9/18/2018
Page No : 3

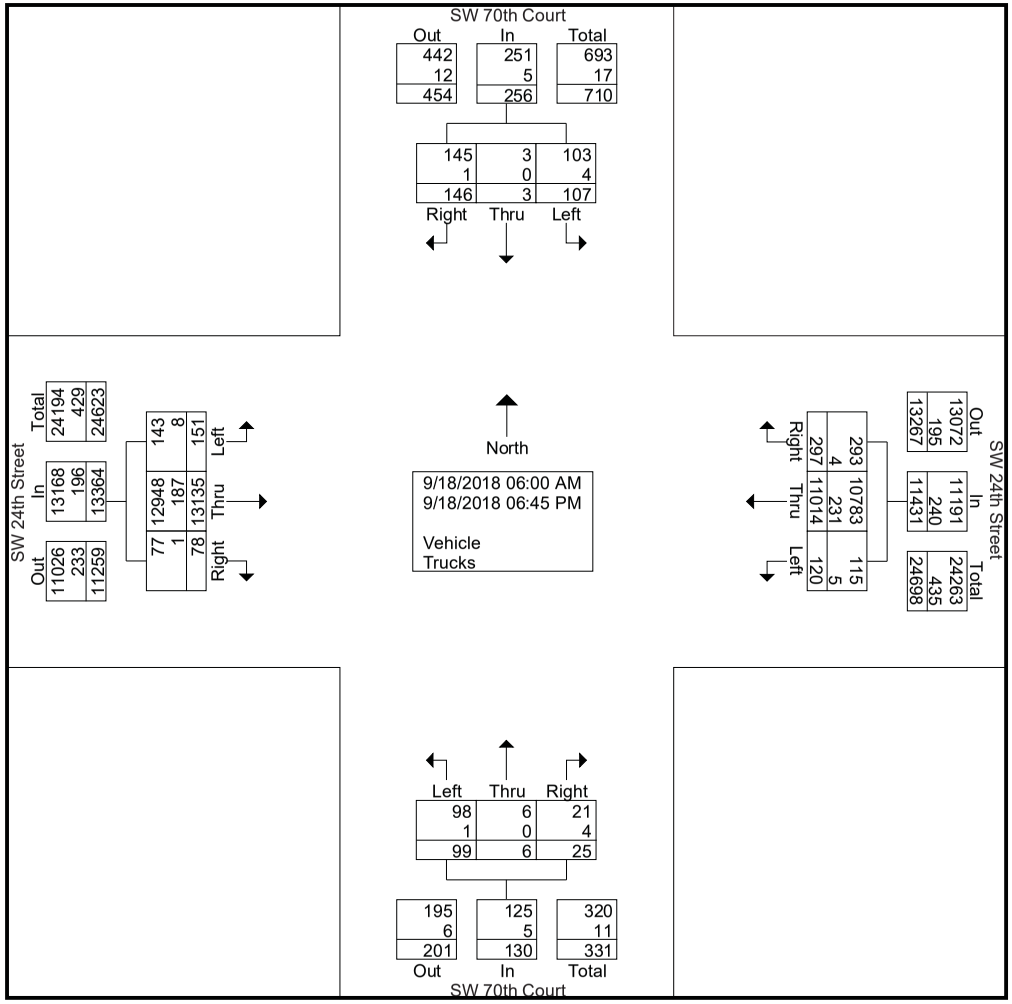

SW 24th Street & SW 70th Avenue

File Name : TMC-9 SW 24th Street & SW 70th Court
Site Code : 00000000
Start Date : 9/18/2018
Page No : 4

	SW 70th Court Southbound					SW 70th Court Northbound					SW 24th Street Westbound					SW 24th Street Eastbound					
Start Time	U-Turns	Left	Thru	Right	App. Total	U-Turns	Left	Thru	Right	App. Total	U-Turns	Left	Thru	Right	App. Total	U-Turns	Left	Thru	Right	App. Total	Int. Total
Peak Hour Analysis From 06:00 AM to 08:45 AM - Peak 1 of 1																					
Peak Hour for Entire Intersection Begins at 08:00 AM																					
08:00 AM	0	**4**	0	**6**	**10**	0	1	0	0	1	0	0	257	**9**	266	0	**2**	368	0	370	647
08:15 AM	0	0	0	4	4	0	0	0	0	0	0	1	282	5	288	0	0	373	**1**	374	666
08:30 AM	0	1	0	5	6	0	**2**	0	0	**2**	0	**7**	281	9	297	0	1	395	1	397	702
08:45 AM	0	3	0	3	6	0	1	0	0	1	0	5	**297**	2	**304**	0	1	**401**	0	**402**	**713**
Total Volume	0	8	0	18	26	0	4	0	0	4	0	13	1117	25	1155	0	4	1537	2	1543	2728
% App. Total	0	30.8	0	69.2		0	100	0	0		0	1.1	96.7	2.2		0	0.3	99.6	0.1		
PHF	.000	.500	.000	.750	.650	.000	.500	.000	.000	.500	.000	.464	.940	.694	.950	.000	.500	.958	.500	.960	.957

SW 24th Street & SW 70th Avenue

File Name : TMC-9 SW 24th Street & SW 70th Court
Site Code : 00000000
Start Date : 9/18/2018
Page No : 5

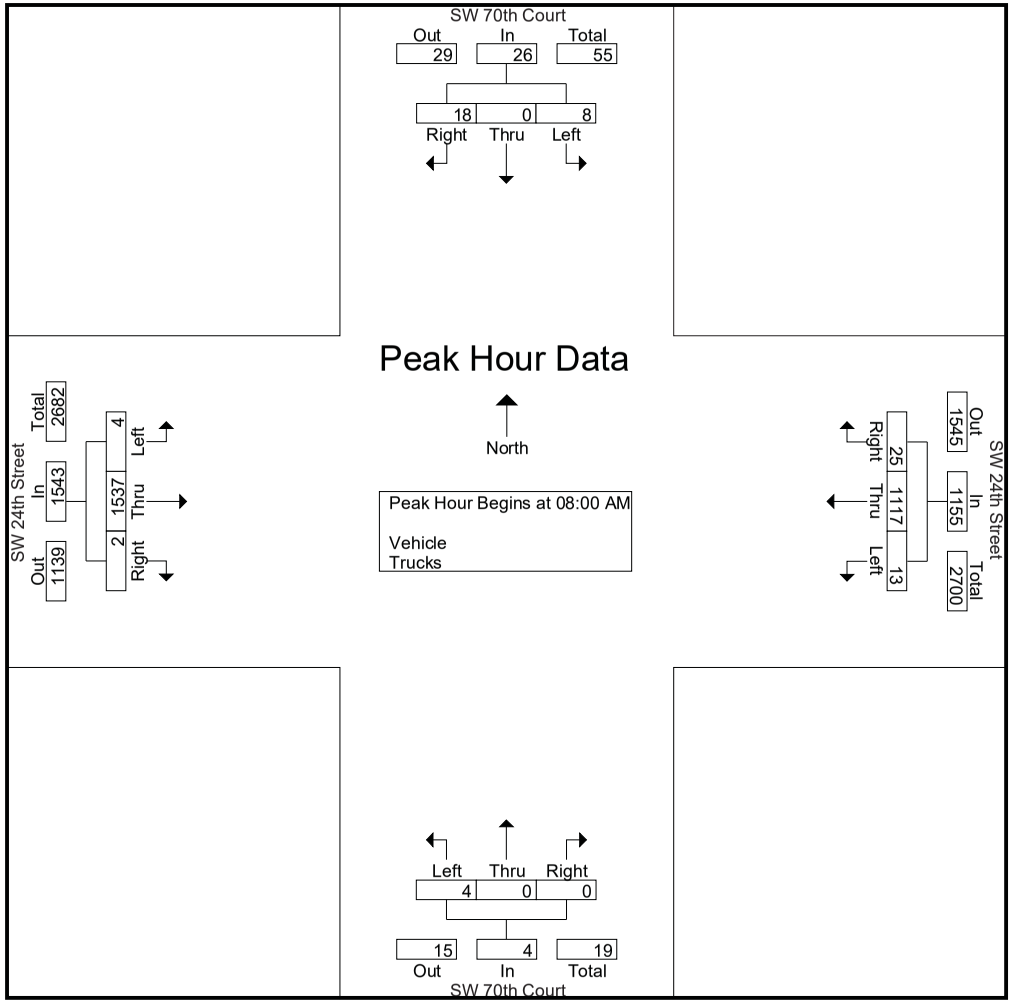

SW 24th Street & SW 70th Avenue

File Name : TMC-9 SW 24th Street & SW 70th Court
Site Code : 00000000
Start Date : 9/18/2018
Page No : 6

	SW 70th Court Southbound					SW 70th Court Northbound					SW 24th Street Westbound					SW 24th Street Eastbound					
Start Time	U-Turns	Left	Thru	Right	App. Total	U-Turns	Left	Thru	Right	App. Total	U-Turns	Left	Thru	Right	App. Total	U-Turns	Left	Thru	Right	App. Total	Int. Total
Peak Hour Analysis From 11:30 AM to 01:15 PM - Peak 1 of 1																					
Peak Hour for Entire Intersection Begins at 12:15 PM																					
12:15 PM	0	3	0	4	7	0	4	0	1	5	0	3	**330**	**19**	**352**	0	3	372	3	378	**742**
12:30 PM	0	**5**	0	3	8	0	4	0	1	5	0	4	295	10	309	**2**	3	363	3	371	693
12:45 PM	0	3	0	3	6	0	**6**	0	1	**7**	**2**	3	271	11	287	1	4	347	4	356	656
01:00 PM	0	5	0	**5**	**10**	0	1	0	**3**	4	0	**5**	305	12	322	0	**7**	**383**	**5**	**395**	731
Total Volume	0	16	0	15	31	0	15	0	6	21	2	15	1201	52	1270	3	17	1465	15	1500	2822
% App. Total	0	51.6	0	48.4		0	71.4	0	28.6		0.2	1.2	94.6	4.1		0.2	1.1	97.7	1		
PHF	.000	.800	.000	.750	.775	.000	.625	.000	.500	.750	.250	.750	.910	.684	.902	.375	.607	.956	.750	.949	.951

SW 24th Street & SW 70th Avenue

File Name : TMC-9 SW 24th Street & SW 70th Court
Site Code : 00000000
Start Date : 9/18/2018
Page No : 7

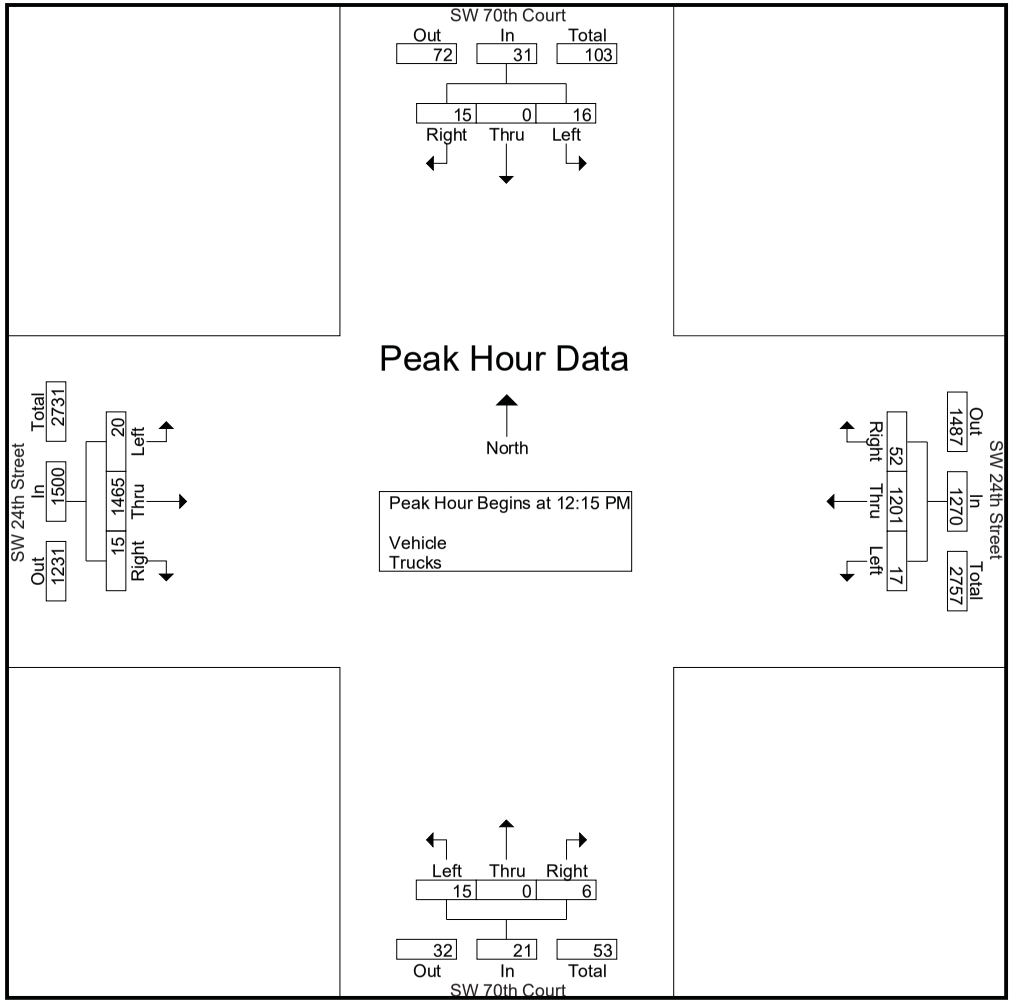

SW 24th Street & SW 70th Avenue

File Name : TMC-9 SW 24th Street & SW 70th Court
Site Code : 00000000
Start Date : 9/18/2018
Page No : 8

	SW 70th Court Southbound					SW 70th Court Northbound					SW 24th Street Westbound					SW 24th Street Eastbound					
Start Time	U-Turns	Left	Thru	Right	App. Total	U-Turns	Left	Thru	Right	App. Total	U-Turns	Left	Thru	Right	App. Total	U-Turns	Left	Thru	Right	App. Total	Int. Total
Peak Hour Analysis From 01:45 PM to 03:15 PM - Peak 1 of 1																					
Peak Hour for Entire Intersection Begins at 02:30 PM																					
02:30 PM	0	1	0	3	4	0	1	0	0	1	0	1	**324**	8	**333**	0	4	319	1	324	662
02:45 PM	0	**6**	0	3	**9**	0	1	0	0	1	0	**6**	297	**10**	313	**1**	**8**	**343**	**3**	**355**	**678**
03:00 PM	0	3	0	**4**	7	0	**3**	0	**2**	**5**	0	1	294	10	305	0	4	300	2	306	623
03:15 PM	0	2	0	3	5	0	1	0	1	2	0	5	301	6	312	1	6	313	1	321	640
Total Volume	0	12	0	13	25	0	6	0	3	9	0	13	1216	34	1263	2	22	1275	7	1306	2603
% App. Total	0	48	0	52		0	66.7	0	33.3		0	1	96.3	2.7		0.2	1.7	97.6	0.5		
PHF	.000	.500	.000	.813	.694	.000	.500	.000	.375	.450	.000	.542	.938	.850	.948	.500	.688	.929	.583	.920	.960

SW 24th Street & SW 70th Avenue

File Name : TMC-9 SW 24th Street & SW 70th Court
Site Code : 00000000
Start Date : 9/18/2018
Page No : 9

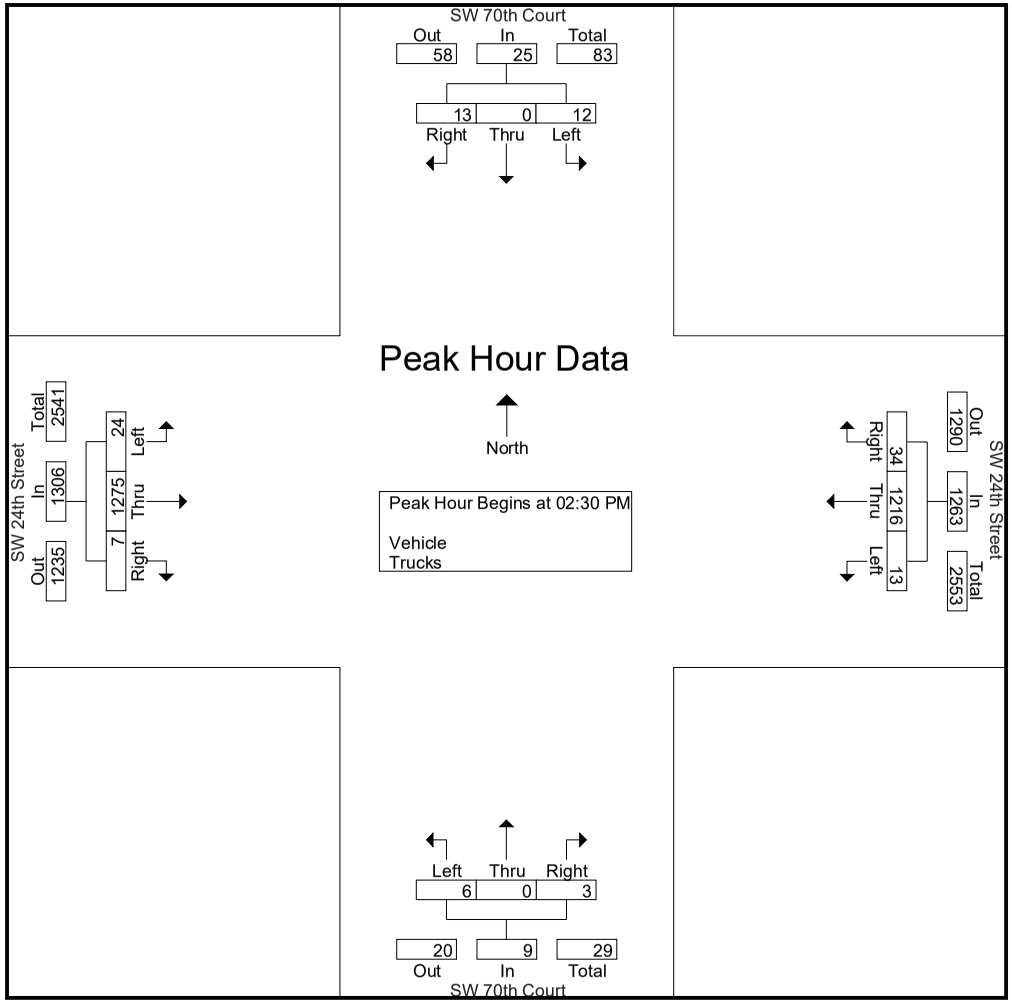

SW 24th Street & SW 70th Avenue

File Name : TMC-9 SW 24th Street & SW 70th Court
Site Code : 00000000
Start Date : 9/18/2018
Page No : 10

	SW 70th Court Southbound					SW 70th Court Northbound					SW 24th Street Westbound					SW 24th Street Eastbound					
Start Time	U-Turns	Left	Thru	Right	App. Total	U-Turns	Left	Thru	Right	App. Total	U-Turns	Left	Thru	Right	App. Total	U-Turns	Left	Thru	Right	App. Total	Int. Total
Peak Hour Analysis From 04:00 PM to 06:45 PM - Peak 1 of 1																					
Peak Hour for Entire Intersection Begins at 04:15 PM																					
04:15 PM	0	**5**	0	3	**8**	0	4	**2**	**2**	**8**	**1**	3	323	**9**	**336**	0	**6**	346	**3**	355	707
04:30 PM	0	4	0	**4**	8	0	2	1	2	5	0	**4**	**325**	5	334	0	4	**372**	3	**379**	**726**
04:45 PM	0	2	0	0	2	0	**6**	0	1	7	0	3	308	4	315	0	4	297	3	304	628
05:00 PM	0	2	0	2	4	0	1	0	1	2	0	1	306	5	312	0	2	341	3	346	664
Total Volume	0	13	0	9	22	0	13	3	6	22	1	11	1262	23	1297	0	16	1356	12	1384	2725
% App. Total	0	59.1	0	40.9		0	59.1	13.6	27.3		0.1	0.8	97.3	1.8		0	1.2	98	0.9		
PHF	.000	.650	.000	.563	.688	.000	.542	.375	.750	.688	.250	.688	.971	.639	.965	.000	.667	.911	1.00	.913	.938

SW 24th Street & SW 70th Avenue

File Name : TMC-9 SW 24th Street & SW 70th Court
Site Code : 00000000
Start Date : 9/18/2018
Page No : 11

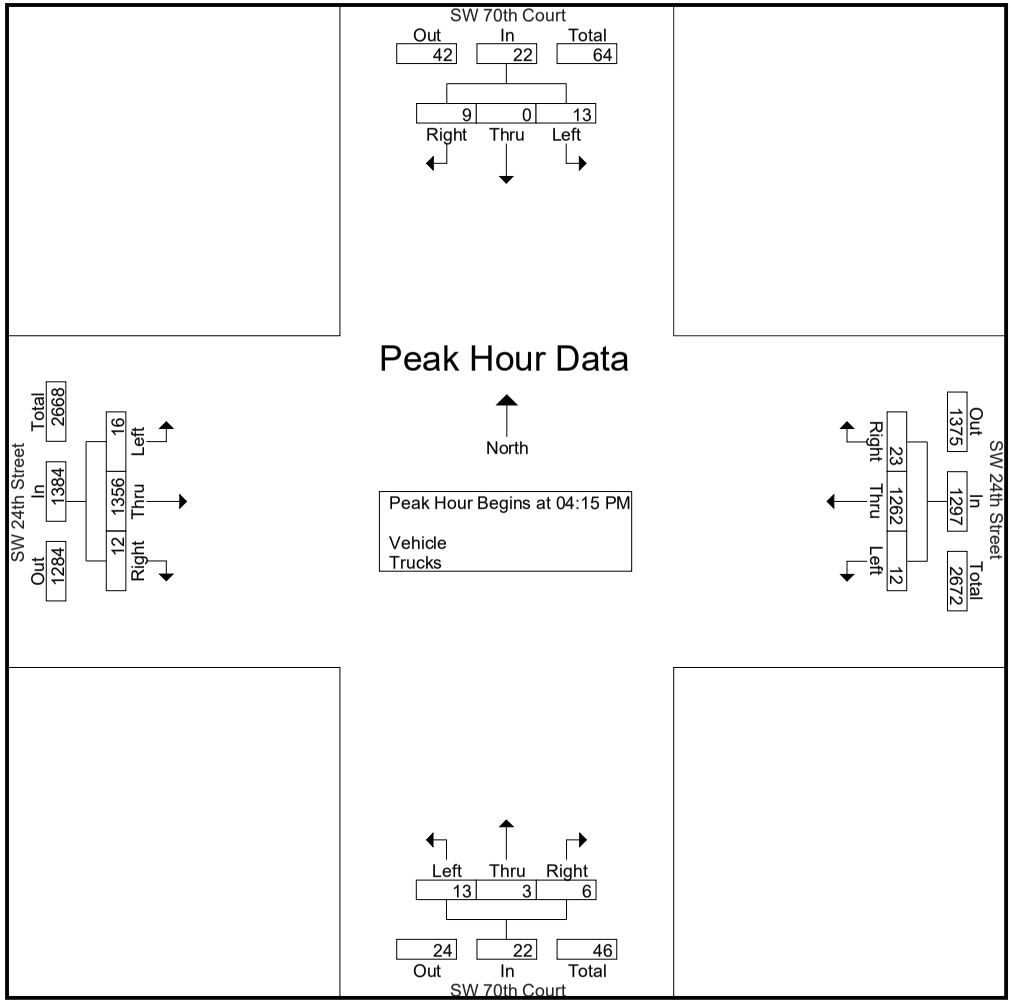

SW 24th Street & SW 69th Avenue

File Name : TMC-10 SW 24th Street & SW 69th Avenue
Site Code : 00000000
Start Date : 9/18/2018
Page No : 1

Groups Printed- Vehicle - Trucks

	SW 69th Avenue Southbound					SW 69th Avenue Northbound					SW 24th Street Westbound					SW 24th Street Eastbound					
Start Time	U-Turns	Left	Thru	Right	App. Total	U-Turns	Left	Thru	Right	App. Total	U-Turns	Left	Thru	Right	App. Total	U-Turns	Left	Thru	Right	App. Total	Int. Total
06:00 AM	0	2	0	7	9	0	4	2	1	7	0	1	93	4	98	0	6	165	3	174	288
06:15 AM	0	1	2	9	12	0	9	0	1	10	0	0	119	5	124	0	11	260	3	274	420
06:30 AM	0	3	0	8	11	0	8	3	3	14	0	0	165	7	172	0	7	336	6	349	546
06:45 AM	0	0	1	14	15	0	3	4	2	9	1	0	179	6	186	0	14	393	11	418	628
Total	0	6	3	38	47	0	24	9	7	40	1	1	556	22	580	0	38	1154	23	1215	1882
07:00 AM	0	4	0	17	21	0	6	0	5	11	1	1	215	6	223	0	8	446	14	468	723
07:15 AM	0	2	0	10	12	0	4	1	9	14	0	1	229	8	238	0	6	396	19	421	685
07:30 AM	0	3	0	10	13	0	12	4	3	19	0	1	205	13	219	0	7	336	23	366	617
07:45 AM	0	4	4	11	19	0	8	3	5	16	0	1	215	6	222	0	17	385	12	414	671
Total	0	13	4	48	65	0	30	8	22	60	1	4	864	33	902	0	38	1563	68	1669	2696
08:00 AM	0	2	2	13	17	0	9	4	5	18	0	1	238	16	255	0	9	377	15	401	691
08:15 AM	0	3	1	14	18	0	9	6	2	17	1	3	252	25	281	0	4	387	16	407	723
08:30 AM	0	2	1	13	16	0	3	2	14	19	2	2	270	13	287	0	15	354	23	392	714
08:45 AM	0	2	2	10	14	0	9	1	4	14	0	1	274	8	283	0	7	404	19	430	741
Total	0	9	6	50	65	0	30	13	25	68	3	7	1034	62	1106	0	35	1522	73	1630	2869
*** BREAK ***																					
11:30 AM	0	2	1	6	9	0	7	1	5	13	1	2	291	11	305	0	10	301	12	323	650
11:45 AM	0	0	1	4	5	0	6	1	6	13	1	1	287	6	295	0	18	341	10	369	682
Total	0	2	2	10	14	0	13	2	11	26	2	3	578	17	600	0	28	642	22	692	1332
12:00 PM	0	2	3	4	9	0	6	0	3	9	4	4	263	9	280	1	15	321	9	346	644
12:15 PM	0	2	0	5	7	0	4	2	2	8	0	1	327	9	337	0	17	371	13	401	753
12:30 PM	0	9	1	3	13	0	5	2	4	11	0	1	292	19	312	0	8	354	15	377	713
12:45 PM	0	1	0	6	7	0	8	0	5	13	1	3	258	8	270	0	16	348	10	374	664
Total	0	14	4	18	36	0	23	4	14	41	5	9	1140	45	1199	1	56	1394	47	1498	2774
01:00 PM	0	3	0	11	14	0	4	2	2	8	1	4	277	20	302	1	13	374	19	407	731
01:15 PM	0	5	3	5	13	0	4	2	5	11	0	3	306	15	324	2	12	353	12	379	727
*** BREAK ***																					
01:45 PM	0	6	8	9	23	0	3	1	4	8	1	3	262	28	294	0	17	301	15	333	658
Total	0	14	11	25	50	0	11	5	11	27	2	10	845	63	920	3	42	1028	46	1119	2116
02:00 PM	0	2	3	11	16	0	5	1	3	9	1	1	269	11	282	1	12	298	10	321	628
02:15 PM	0	1	0	5	6	0	7	2	1	10	1	0	278	18	297	0	10	299	22	331	644
02:30 PM	0	3	0	1	4	0	9	2	3	14	1	4	304	22	331	1	13	300	18	332	681
02:45 PM	0	1	3	7	11	0	9	3	4	16	2	2	287	20	311	1	4	348	20	373	711
Total	0	7	6	24	37	0	30	8	11	49	5	7	1138	71	1221	3	39	1245	70	1357	2664

SW 24th Street & SW 69th Avenue

File Name : TMC-10 SW 24th Street & SW 69th Avenue
Site Code : 00000000
Start Date : 9/18/2018
Page No : 2

Groups Printed- Vehicle - Trucks

	SW 69th Avenue Southbound					SW 69th Avenue Northbound					SW 24th Street Westbound					SW 24th Street Eastbound					
Start Time	U-Turns	Left	Thru	Right	App. Total	U-Turns	Left	Thru	Right	App. Total	U-Turns	Left	Thru	Right	App. Total	U-Turns	Left	Thru	Right	App. Total	Int. Total
03:00 PM	0	1	4	4	9	0	9	1	5	15	2	7	275	30	314	0	18	293	18	329	667
03:15 PM	0	3	2	11	16	0	3	1	4	8	1	6	299	24	330	0	15	300	18	333	687
*** BREAK ***																					
Total	0	4	6	15	25	0	12	2	9	23	3	13	574	54	644	0	33	593	36	662	1354
04:00 PM	0	1	1	4	6	0	6	1	6	13	0	1	275	18	294	1	13	331	11	356	669
04:15 PM	0	0	2	11	13	0	11	1	3	15	0	2	289	28	319	1	14	327	16	358	705
04:30 PM	0	4	1	5	10	0	14	3	5	22	1	5	255	17	278	0	18	342	15	375	685
04:45 PM	0	3	2	5	10	0	12	3	5	20	0	3	273	19	295	0	7	308	12	327	652
Total	0	8	6	25	39	0	43	8	19	70	1	11	1092	82	1186	2	52	1308	54	1416	2711
05:00 PM	0	4	3	8	15	0	13	2	3	18	0	1	257	21	279	0	27	303	15	345	657
05:15 PM	0	3	3	25	31	0	20	1	6	27	0	0	220	15	235	0	12	329	11	352	645
05:30 PM	0	2	0	26	28	0	21	1	5	27	1	1	235	14	251	1	14	318	7	340	646
05:45 PM	0	2	5	19	26	0	22	5	9	36	0	0	218	16	234	0	11	307	9	327	623
Total	0	11	11	78	100	0	76	9	23	108	1	2	930	66	999	1	64	1257	42	1364	2571
06:00 PM	0	1	2	24	27	0	13	1	6	20	1	0	221	7	229	0	6	265	15	286	562
06:15 PM	0	3	3	25	31	0	7	2	5	14	2	1	269	13	285	0	16	290	8	314	644
06:30 PM	0	0	2	19	21	0	11	1	2	14	0	0	311	14	325	0	10	312	8	330	690
06:45 PM	0	1	4	8	13	0	6	1	7	14	0	2	324	8	334	0	10	328	6	344	705
Total	0	5	11	76	92	0	37	5	20	62	3	3	1125	42	1173	0	42	1195	37	1274	2601
Grand Total	0	93	70	407	570	0	329	73	172	574	27	70	9876	557	10530	10	467	12901	518	13896	25570
Apprch %	0	16.3	12.3	71.4		0	57.3	12.7	30		0.3	0.7	93.8	5.3		0.1	3.4	92.8	3.7		
Total %	0	0.4	0.3	1.6	2.2	0	1.3	0.3	0.7	2.2	0.1	0.3	38.6	2.2	41.2	0	1.8	50.5	2	54.3	
Vehicle	0	93	70	400	563	0	324	72	171	567	27	70	9669	546	10312	10	460	12688	507	13665	25107
% Vehicle	0	100	100	98.3	98.8	0	98.5	98.6	99.4	98.8	100	100	97.9	98	97.9	100	98.5	98.3	97.9	98.3	98.2
Trucks	0	0	0	7	7	0	5	1	1	7	0	0	207	11	218	0	7	213	11	231	463
% Trucks	0	0	0	1.7	1.2	0	1.5	1.4	0.6	1.2	0	0	2.1	2	2.1	0	1.5	1.7	2.1	1.7	1.8

SW 24th Street & SW 69th Avenue

File Name : TMC-10 SW 24th Street & SW 69th Avenue
Site Code : 00000000
Start Date : 9/18/2018
Page No : 3

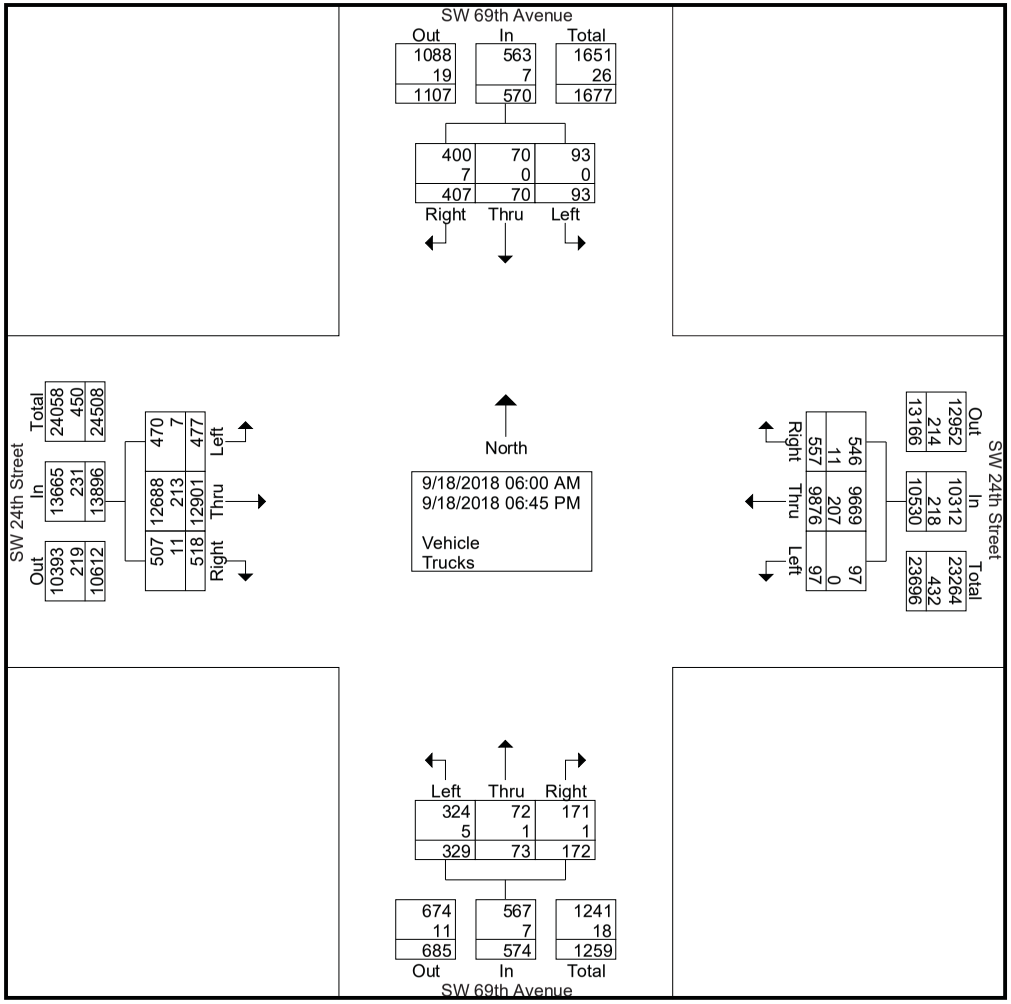

SW 24th Street & SW 69th Avenue

File Name : TMC-10 SW 24th Street & SW 69th Avenue
Site Code : 00000000
Start Date : 9/18/2018
Page No : 4

	SW 69th Avenue Southbound					SW 69th Avenue Northbound					SW 24th Street Westbound					SW 24th Street Eastbound					
Start Time	U-Turns	Left	Thru	Right	App. Total	U-Turns	Left	Thru	Right	App. Total	U-Turns	Left	Thru	Right	App. Total	U-Turns	Left	Thru	Right	App. Total	Int. Total
Peak Hour Analysis From 06:00 AM to 08:45 AM - Peak 1 of 1																					
Peak Hour for Entire Intersection Begins at 08:00 AM																					
08:00 AM	0	2	**2**	13	17	0	**9**	4	5	18	0	1	238	16	255	0	9	377	15	401	691
08:15 AM	0	**3**	1	**14**	**18**	0	9	**6**	2	17	1	**3**	252	**25**	281	0	4	387	16	407	723
08:30 AM	0	2	1	13	16	0	3	2	**14**	**19**	**2**	2	270	13	**287**	0	**15**	354	**23**	392	714
08:45 AM	0	2	2	10	14	0	9	1	4	14	0	1	**274**	8	283	0	7	**404**	19	**430**	**741**
Total Volume	0	9	6	50	65	0	30	13	25	68	3	7	1034	62	1106	0	35	1522	73	1630	2869
% App. Total	0	13.8	9.2	76.9		0	44.1	19.1	36.8		0.3	0.6	93.5	5.6		0	2.1	93.4	4.5		
PHF	.000	.750	.750	.893	.903	.000	.833	.542	.446	.895	.375	.583	.943	.620	.963	.000	.583	.942	.793	.948	.968

SW 24th Street & SW 69th Avenue

File Name : TMC-10 SW 24th Street & SW 69th Avenue
Site Code : 00000000
Start Date : 9/18/2018
Page No : 5

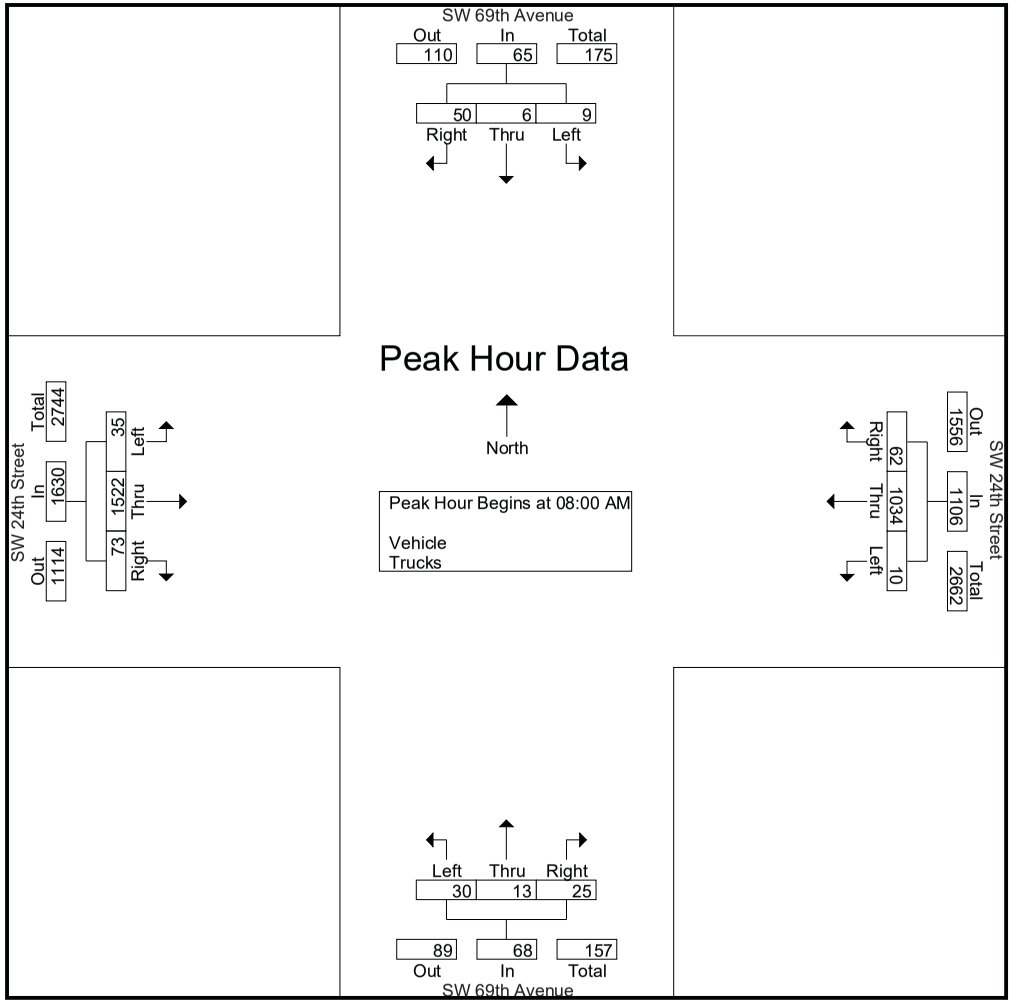

SW 24th Street & SW 69th Avenue

File Name : TMC-10 SW 24th Street & SW 69th Avenue
Site Code : 00000000
Start Date : 9/18/2018
Page No : 6

	SW 69th Avenue Southbound					SW 69th Avenue Northbound					SW 24th Street Westbound					SW 24th Street Eastbound					
Start Time	U-Turns	Left	Thru	Right	App. Total	U-Turns	Left	Thru	Right	App. Total	U-Turns	Left	Thru	Right	App. Total	U-Turns	Left	Thru	Right	App. Total	Int. Total
Peak Hour Analysis From 11:30 AM to 01:15 PM - Peak 1 of 1																					
Peak Hour for Entire Intersection Begins at 12:15 PM																					
12:15 PM	0	2	0	5	7	0	4	**2**	2	8	0	1	**327**	9	**337**	0	**17**	371	13	401	**753**
12:30 PM	0	**9**	**1**	3	13	0	5	2	4	11	0	1	292	19	312	0	8	354	15	377	713
12:45 PM	0	1	0	6	7	0	**8**	0	**5**	**13**	**1**	3	258	8	270	0	16	348	10	374	664
01:00 PM	0	3	0	**11**	**14**	0	4	2	2	8	1	**4**	277	**20**	302	**1**	13	**374**	**19**	**407**	731
Total Volume	0	15	1	25	41	0	21	6	13	40	2	9	1154	56	1221	1	54	1447	57	1559	2861
% App. Total	0	36.6	2.4	61		0	52.5	15	32.5		0.2	0.7	94.5	4.6		0.1	3.5	92.8	3.7		
PHF	.000	.417	.250	.568	.732	.000	.656	.750	.650	.769	.500	.563	.882	.700	.906	.250	.794	.967	.750	.958	.950

SW 24th Street & SW 69th Avenue

File Name : TMC-10 SW 24th Street & SW 69th Avenue
Site Code : 00000000
Start Date : 9/18/2018
Page No : 7

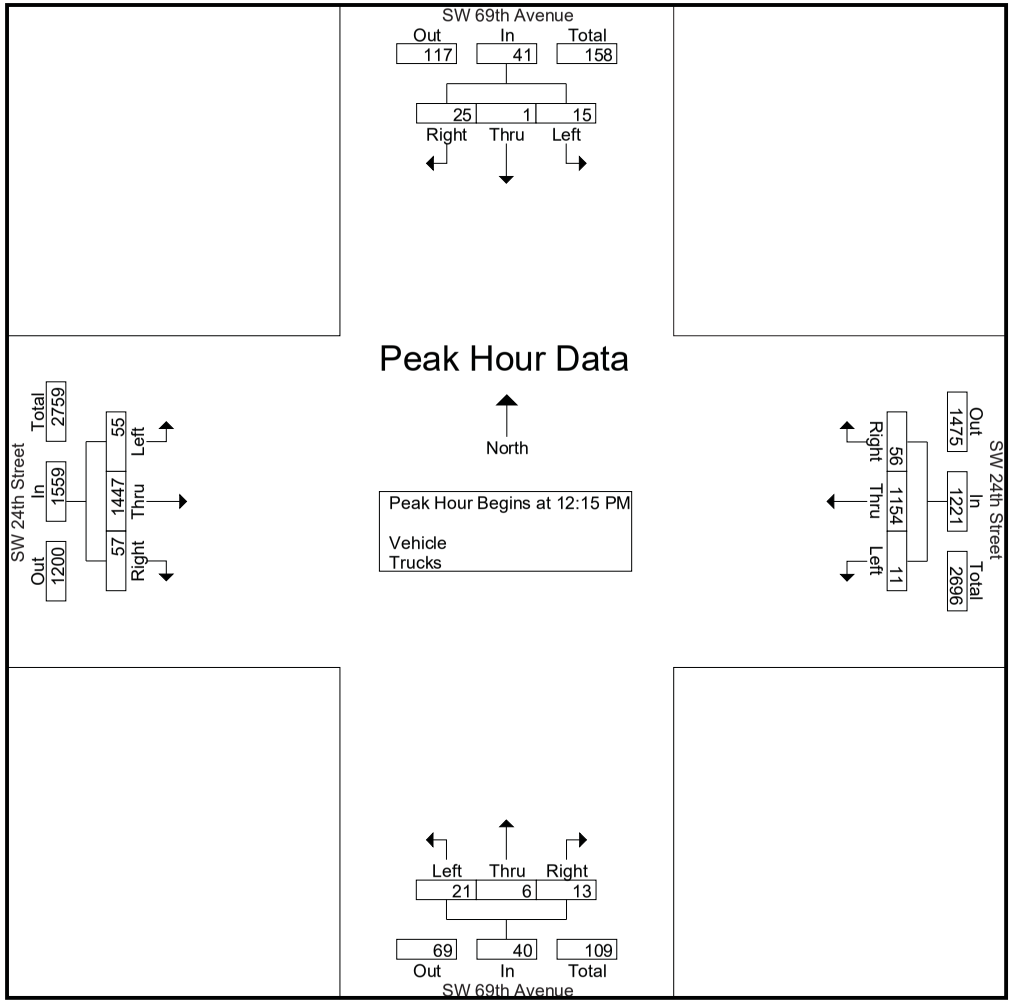

SW 24th Street & SW 69th Avenue

File Name : TMC-10 SW 24th Street & SW 69th Avenue
Site Code : 00000000
Start Date : 9/18/2018
Page No : 8

	SW 69th Avenue Southbound					SW 69th Avenue Northbound					SW 24th Street Westbound					SW 24th Street Eastbound					
Start Time	U-Turns	Left	Thru	Right	App. Total	U-Turns	Left	Thru	Right	App. Total	U-Turns	Left	Thru	Right	App. Total	U-Turns	Left	Thru	Right	App. Total	Int. Total
Peak Hour Analysis From 01:45 PM to 03:15 PM - Peak 1 of 1																					
Peak Hour for Entire Intersection Begins at 02:30 PM																					
02:30 PM	0	**3**	0	1	4	0	**9**	2	3	14	1	4	**304**	22	**331**	**1**	13	300	18	332	681
02:45 PM	0	1	3	7	11	0	9	**3**	4	**16**	**2**	2	287	20	311	1	4	**348**	**20**	**373**	**711**
03:00 PM	0	1	**4**	4	9	0	9	1	**5**	15	2	**7**	275	**30**	314	0	**18**	293	18	329	667
03:15 PM	0	3	2	**11**	**16**	0	3	1	4	8	1	6	299	24	330	0	15	300	18	333	687
Total Volume	0	8	9	23	40	0	30	7	16	53	6	19	1165	96	1286	2	50	1241	74	1367	2746
% App. Total	0	20	22.5	57.5		0	56.6	13.2	30.2		0.5	1.5	90.6	7.5		0.1	3.7	90.8	5.4		
PHF	.000	.667	.563	.523	.625	.000	.833	.583	.800	.828	.750	.679	.958	.800	.971	.500	.694	.892	.925	.916	.966

SW 24th Street & SW 69th Avenue

File Name : TMC-10 SW 24th Street & SW 69th Avenue
Site Code : 00000000
Start Date : 9/18/2018
Page No : 9

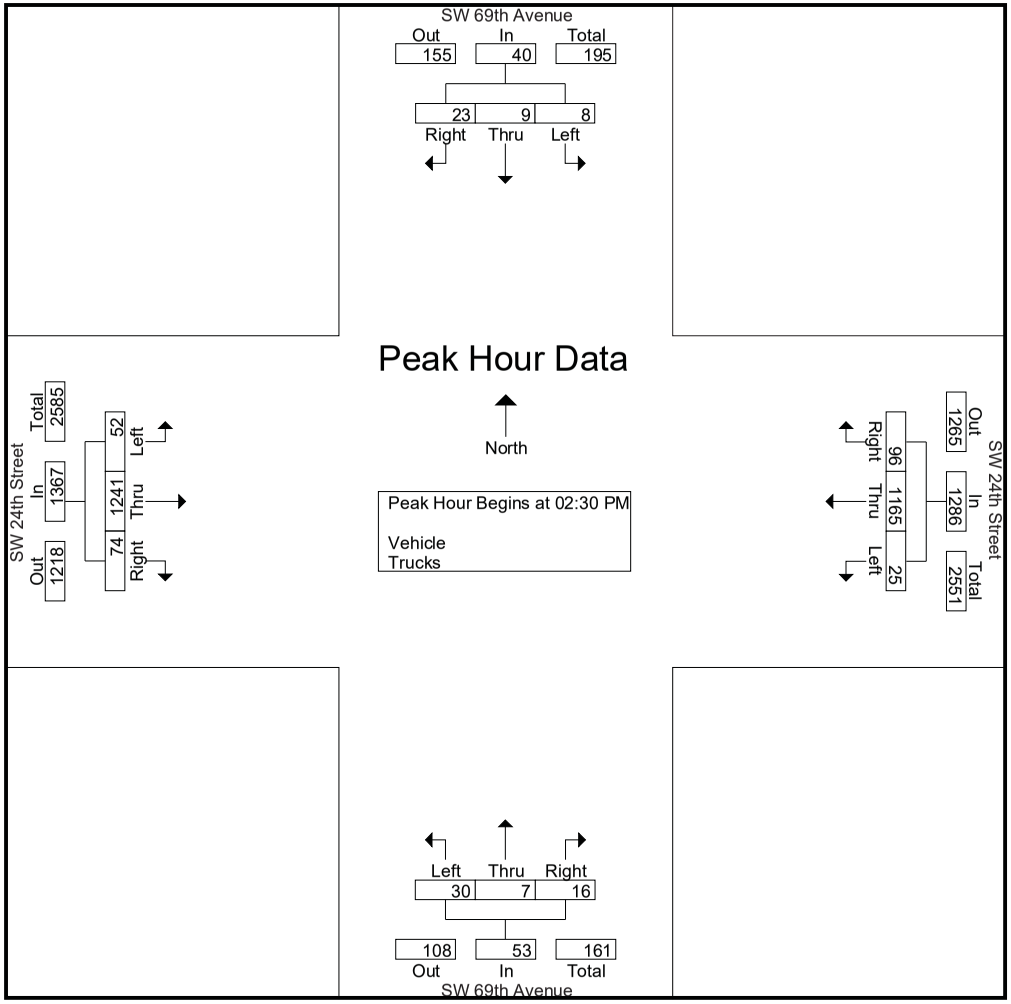

SW 24th Street & SW 69th Avenue

File Name : TMC-10 SW 24th Street & SW 69th Avenue
Site Code : 00000000
Start Date : 9/18/2018
Page No : 10

	SW 69th Avenue Southbound					SW 69th Avenue Northbound					SW 24th Street Westbound					SW 24th Street Eastbound					
Start Time	U-Turns	Left	Thru	Right	App. Total	U-Turns	Left	Thru	Right	App. Total	U-Turns	Left	Thru	Right	App. Total	U-Turns	Left	Thru	Right	App. Total	Int. Total
Peak Hour Analysis From 04:00 PM to 06:45 PM - Peak 1 of 1																					
Peak Hour for Entire Intersection Begins at 04:00 PM																					
04:00 PM	0	1	1	4	6	0	6	1	**6**	13	0	1	275	18	294	**1**	13	331	11	356	669
04:15 PM	0	0	**2**	**11**	**13**	0	11	1	3	15	0	2	**289**	**28**	**319**	1	14	327	**16**	358	**705**
04:30 PM	0	**4**	1	5	10	0	**14**	**3**	5	**22**	**1**	**5**	255	17	278	0	**18**	**342**	15	**375**	685
04:45 PM	0	3	2	5	10	0	12	3	5	20	0	3	273	19	295	0	7	308	12	327	652
Total Volume	0	8	6	25	39	0	43	8	19	70	1	11	1092	82	1186	2	52	1308	54	1416	2711
% App. Total	0	20.5	15.4	64.1		0	61.4	11.4	27.1		0.1	0.9	92.1	6.9		0.1	3.7	92.4	3.8		
PHF	.000	.500	.750	.568	.750	.000	.768	.667	.792	.795	.250	.550	.945	.732	.929	.500	.722	.956	.844	.944	.961

SW 24th Street & SW 69th Avenue

File Name : TMC-10 SW 24th Street & SW 69th Avenue
Site Code : 00000000
Start Date : 9/18/2018
Page No : 11

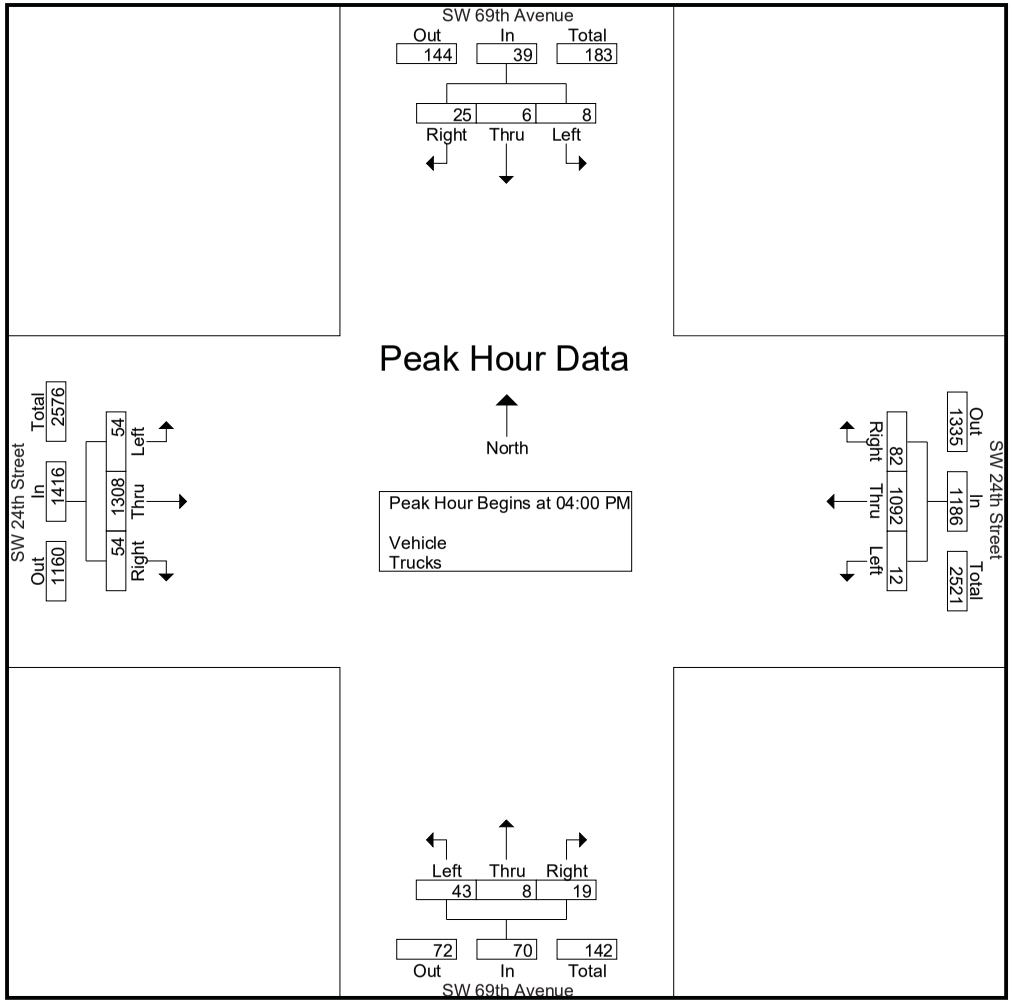

SW 40th Street & SW 70th Avenue

File Name : TMC-11 SW 40th Street & SW 70th Avenue
Site Code : 00000000
Start Date : 9/18/2018
Page No : 1

Groups Printed- Vehicle - Trucks

	SW 70th Avenue Southbound					Northbound					SW 40th Street Westbound					SW 40th Street Eastbound					
Start Time	U-Turns	Left	Thru	Right	App. Total	U-Turns	Left	Thru	Right	App. Total	U-Turns	Left	Thru	Right	App. Total	U-Turns	Left	Thru	Right	App. Total	Int. Total
06:00 AM	0	0	0	0	0	0	0	0	0	0	0	4	133	0	137	0	0	320	1	321	458
06:15 AM	0	0	0	0	0	0	0	0	0	0	0	3	167	0	170	0	1	510	4	515	685
06:30 AM	0	0	0	0	0	0	0	0	0	0	0	5	248	1	254	0	2	691	0	693	947
06:45 AM	0	0	0	0	0	0	0	0	0	0	0	9	250	0	259	0	3	709	4	716	975
Total	0	0	0	0	0	0	0	0	0	0	0	21	798	1	820	0	6	2230	9	2245	3065
07:00 AM	0	0	0	0	0	0	0	0	0	0	0	13	289	1	303	0	0	794	3	797	1100
07:15 AM	0	0	0	1	1	0	0	0	0	0	0	2	388	3	393	0	3	784	3	790	1184
07:30 AM	0	1	0	2	3	0	0	0	0	0	0	9	447	2	458	0	3	722	6	731	1192
07:45 AM	0	1	0	0	1	0	0	0	0	0	0	16	420	4	440	0	4	781	6	791	1232
Total	0	2	0	3	5	0	0	0	0	0	0	40	1544	10	1594	0	10	3081	18	3109	4708
08:00 AM	0	1	0	0	1	0	0	0	0	0	0	5	403	1	409	0	1	793	3	797	1207
08:15 AM	0	0	0	0	0	0	0	0	0	0	0	9	463	1	473	0	3	738	4	745	1218
08:30 AM	0	0	0	5	5	0	0	0	0	0	0	10	420	2	432	0	0	764	7	771	1208
08:45 AM	0	0	0	0	0	0	0	0	0	0	1	10	376	1	388	0	4	631	9	644	1032
Total	0	1	0	5	6	0	0	0	0	0	1	34	1662	5	1702	0	8	2926	23	2957	4665
*** BREAK ***																					
11:30 AM	0	2	0	1	3	0	0	0	0	0	0	5	415	2	422	0	3	453	10	466	891
11:45 AM	0	0	1	3	4	0	0	0	0	0	0	4	455	2	461	0	1	573	15	589	1054
Total	0	2	1	4	7	0	0	0	0	0	0	9	870	4	883	0	4	1026	25	1055	1945
12:00 PM	0	2	0	4	6	0	0	0	0	0	0	11	420	1	432	2	3	524	10	539	977
12:15 PM	0	1	0	1	2	0	0	0	0	0	1	6	432	4	443	1	5	521	5	532	977
12:30 PM	0	1	0	2	3	0	0	0	0	0	0	5	465	5	475	1	1	516	9	527	1005
12:45 PM	0	2	1	0	3	0	0	0	0	0	0	8	452	3	463	0	1	499	6	506	972
Total	0	6	1	7	14	0	0	0	0	0	1	30	1769	13	1813	4	10	2060	30	2104	3931
01:00 PM	0	0	0	0	0	0	0	0	0	0	0	3	430	2	435	0	2	484	12	498	933
01:15 PM	0	0	0	2	2	0	0	0	0	0	0	4	452	2	458	1	1	442	7	451	911
*** BREAK ***																					
Total	0	0	0	2	2	0	0	0	0	0	0	7	882	4	893	1	3	926	19	949	1844

*** BREAK ***

SW 40th Street & SW 70th Avenue

File Name : TMC-11 SW 40th Street & SW 70th Avenue
Site Code : 00000000
Start Date : 9/18/2018
Page No : 2

Groups Printed- Vehicle - Trucks

	SW 70th Avenue Southbound					Northbound					SW 40th Street Westbound					SW 40th Street Eastbound					
Start Time	U-Turns	Left	Thru	Right	App. Total	U-Turns	Left	Thru	Right	App. Total	U-Turns	Left	Thru	Right	App. Total	U-Turns	Left	Thru	Right	App. Total	Int. Total
04:00 PM	0	1	0	0	1	0	0	0	0	0	0	7	518	0	525	0	1	485	5	491	1017
04:15 PM	0	0	0	0	0	0	0	0	0	0	0	3	364	1	368	0	1	475	2	478	846
04:30 PM	0	0	0	0	0	0	0	0	0	0	0	4	456	2	462	0	0	450	4	454	916
04:45 PM	0	0	0	0	0	0	0	0	0	0	0	4	375	1	380	0	2	496	1	499	879
Total	0	1	0	0	1	0	0	0	0	0	0	18	1713	4	1735	0	4	1906	12	1922	3658
05:00 PM	0	0	0	0	0	0	0	0	0	0	0	7	393	1	401	0	0	465	4	469	870
05:15 PM	0	0	0	0	0	0	0	0	0	0	0	4	369	1	374	0	0	505	3	508	882
05:30 PM	0	0	0	0	0	0	0	0	0	0	0	7	347	1	355	0	0	436	1	437	792
05:45 PM	0	0	0	0	0	0	0	0	0	0	0	8	336	0	344	0	0	494	0	494	838
Total	0	0	0	0	0	0	0	0	0	0	0	26	1445	3	1474	0	0	1900	8	1908	3382
06:00 PM	0	0	0	0	0	0	0	0	0	0	0	2	247	0	249	0	1	464	2	467	716
06:15 PM	0	0	0	0	0	0	0	0	0	0	0	1	479	0	480	0	0	428	2	430	910
06:30 PM	0	0	0	0	0	0	0	0	0	0	0	4	489	0	493	0	0	415	1	416	909
06:45 PM	0	0	0	0	0	0	0	0	0	0	0	4	492	0	496	0	0	404	1	405	901
Total	0	0	0	0	0	0	0	0	0	0	0	11	1707	0	1718	0	1	1711	6	1718	3436
Grand Total	0	12	2	21	35	0	0	0	0	0	2	196	12390	44	12632	5	46	17766	150	17967	30634
Apprch %	0	34.3	5.7	60		0	0	0	0		0	1.6	98.1	0.3		0	0.3	98.9	0.8		
Total %	0	0	0	0.1	0.1	0	0	0	0	0	0	0.6	40.4	0.1	41.2	0	0.2	58	0.5	58.7	
Vehicle	0	11	0	15	26	0	0	0	0	0	2	185	12174	42	12403	5	44	17465	141	17655	30084
% Vehicle	0	91.7	0	71.4	74.3	0	0	0	0	0	100	94.4	98.3	95.5	98.2	100	95.7	98.3	94	98.3	98.2
Trucks	0	1	2	6	9	0	0	0	0	0	0	11	216	2	229	0	2	301	9	312	550
% Trucks	0	8.3	100	28.6	25.7	0	0	0	0	0	0	5.6	1.7	4.5	1.8	0	4.3	1.7	6	1.7	1.8

SW 40th Street & SW 70th Avenue

File Name : TMC-11 SW 40th Street & SW 70th Avenue
Site Code : 00000000
Start Date : 9/18/2018
Page No : 3

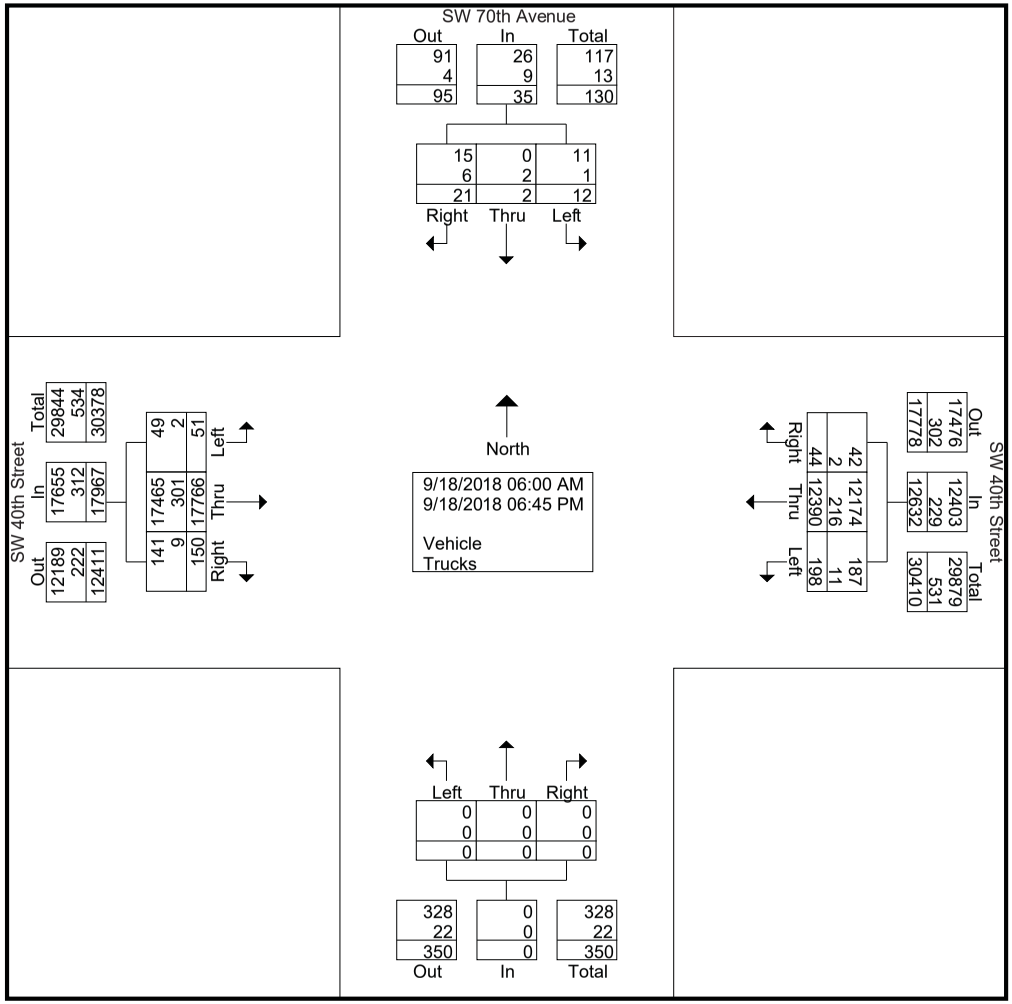

SW 40th Street & SW 70th Avenue

File Name : TMC-11 SW 40th Street & SW 70th Avenue
Site Code : 00000000
Start Date : 9/18/2018
Page No : 4

	SW 70th Avenue Southbound					Northbound					SW 40th Street Westbound					SW 40th Street Eastbound					
Start Time	U-Turns	Left	Thru	Right	App. Total	U-Turns	Left	Thru	Right	App. Total	U-Turns	Left	Thru	Right	App. Total	U-Turns	Left	Thru	Right	App. Total	Int. Total
Peak Hour Analysis From 06:00 AM to 08:45 AM - Peak 1 of 1																					
Peak Hour for Entire Intersection Begins at 07:45 AM																					
07:45 AM	0	**1**	0	0	1	0	0	0	0	0	0	**16**	420	**4**	440	0	**4**	781	6	791	**1232**
08:00 AM	0	1	0	0	1	0	0	0	0	0	0	5	403	1	409	0	1	**793**	3	**797**	1207
08:15 AM	0	0	0	0	0	0	0	0	0	0	0	9	**463**	1	**473**	0	3	738	4	745	1218
08:30 AM	0	0	0	**5**	**5**	0	0	0	0	0	0	10	420	2	432	0	0	764	**7**	771	1208
Total Volume	0	2	0	5	7	0	0	0	0	0	0	40	1706	8	1754	0	8	3076	20	3104	4865
% App. Total	0	28.6	0	71.4		0	0	0	0		0	2.3	97.3	0.5		0	0.3	99.1	0.6		
PHF	.000	.500	.000	.250	.350	.000	.000	.000	.000	.000	.000	.625	.921	.500	.927	.000	.500	.970	.714	.974	.987

SW 40th Street & SW 70th Avenue

File Name : TMC-11 SW 40th Street & SW 70th Avenue
Site Code : 00000000
Start Date : 9/18/2018
Page No : 5

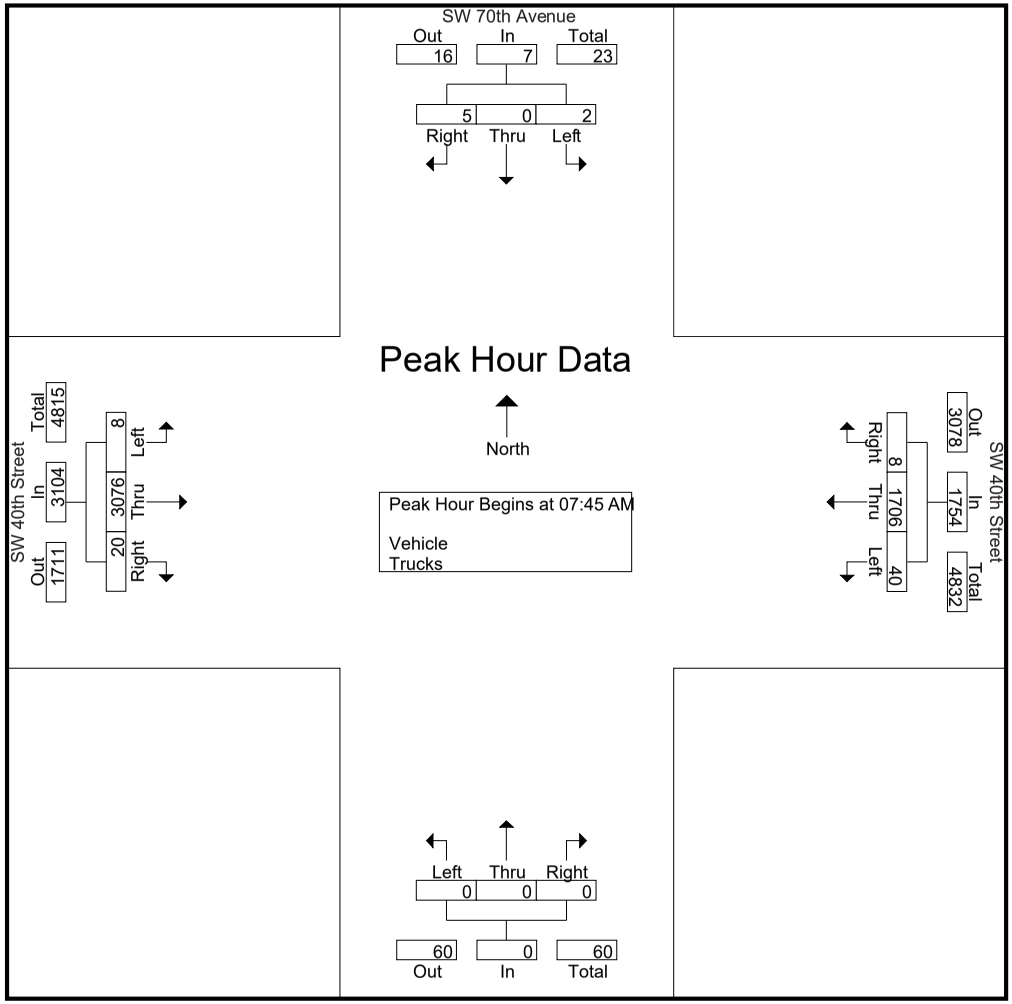

SW 40th Street & SW 70th Avenue

File Name : TMC-11 SW 40th Street & SW 70th Avenue
Site Code : 00000000
Start Date : 9/18/2018
Page No : 6

	SW 70th Avenue Southbound					Northbound					SW 40th Street Westbound					SW 40th Street Eastbound					
Start Time	U-Turns	Left	Thru	Right	App. Total	U-Turns	Left	Thru	Right	App. Total	U-Turns	Left	Thru	Right	App. Total	U-Turns	Left	Thru	Right	App. Total	Int. Total
Peak Hour Analysis From 11:30 AM to 01:15 PM - Peak 1 of 1																					
Peak Hour for Entire Intersection Begins at 11:45 AM																					
11:45 AM	0	0	**1**	3	4	0	0	0	0	0	0	4	455	2	461	0	1	**573**	**15**	**589**	**1054**
12:00 PM	0	**2**	0	**4**	**6**	0	0	0	0	0	0	**11**	420	1	432	**2**	3	524	10	539	977
12:15 PM	0	1	0	1	2	0	0	0	0	0	**1**	6	432	4	443	1	**5**	521	5	532	977
12:30 PM	0	1	0	2	3	0	0	0	0	0	0	5	**465**	**5**	**475**	1	1	516	9	527	1005
Total Volume	0	4	1	10	15	0	0	0	0	0	1	26	1772	12	1811	4	10	2134	39	2187	4013
% App. Total	0	26.7	6.7	66.7		0	0	0	0		0.1	1.4	97.8	0.7		0.2	0.5	97.6	1.8		
PHF	.000	.500	.250	.625	.625	.000	.000	.000	.000	.000	.250	.591	.953	.600	.953	.500	.500	.931	.650	.928	.952

SW 40th Street & SW 70th Avenue

File Name : TMC-11 SW 40th Street & SW 70th Avenue
Site Code : 00000000
Start Date : 9/18/2018
Page No : 7

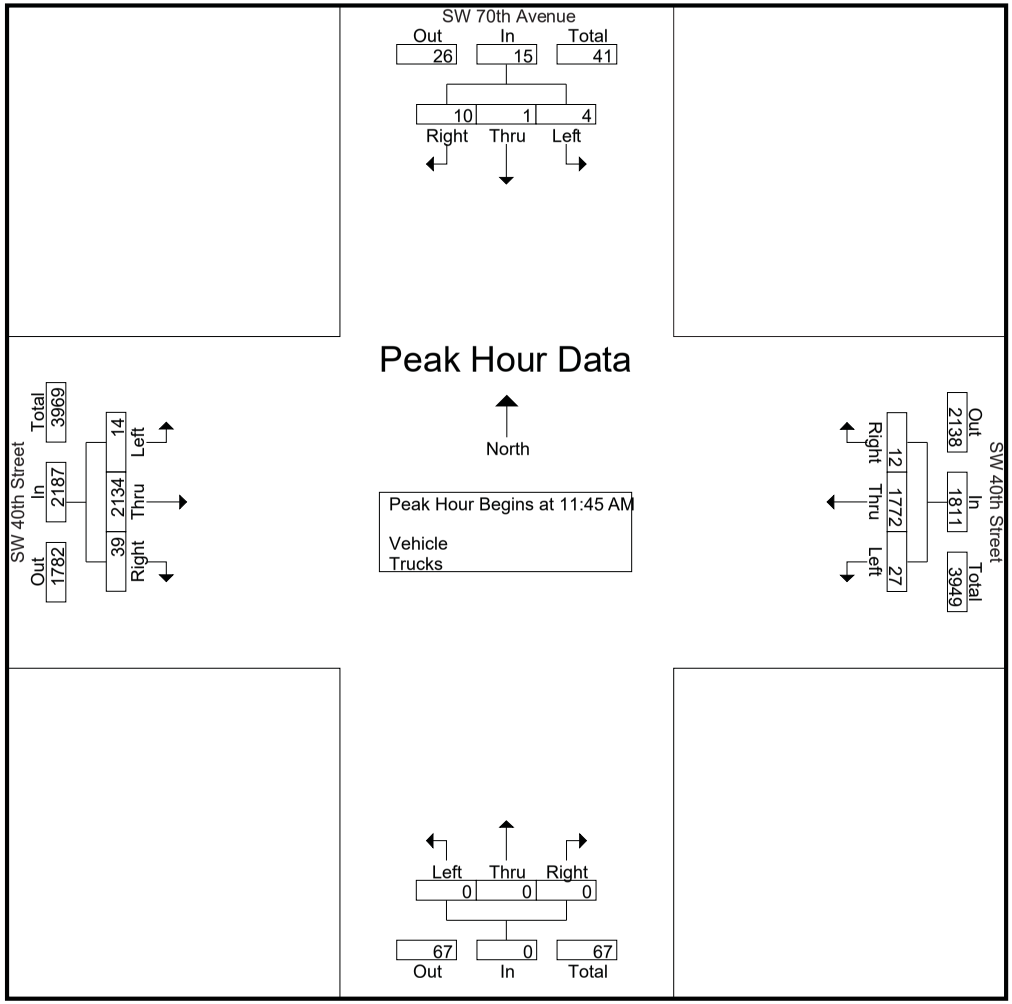

SW 40th Street & SW 70th Avenue

File Name : TMC-11 SW 40th Street & SW 70th Avenue
Site Code : 00000000
Start Date : 9/18/2018
Page No : 8

	SW 70th Avenue Southbound					Northbound					SW 40th Street Westbound					SW 40th Street Eastbound					
Start Time	U-Turns	Left	Thru	Right	App. Total	U-Turns	Left	Thru	Right	App. Total	U-Turns	Left	Thru	Right	App. Total	U-Turns	Left	Thru	Right	App. Total	Int. Total
Peak Hour Analysis From 04:00 PM to 06:45 PM - Peak 1 of 1																					
Peak Hour for Entire Intersection Begins at 04:00 PM																					
04:00 PM	0	**1**	0	0	**1**	0	0	0	0	0	0	**7**	**518**	0	**525**	0	1	485	**5**	491	**1017**
04:15 PM	0	0	0	0	0	0	0	0	0	0	0	3	364	1	368	0	1	475	2	478	846
04:30 PM	0	0	0	0	0	0	0	0	0	0	0	4	456	**2**	462	0	0	450	4	454	916
04:45 PM	0	0	0	0	0	0	0	0	0	0	0	4	375	1	380	0	**2**	**496**	1	**499**	879
Total Volume	0	1	0	0	1	0	0	0	0	0	0	18	1713	4	1735	0	4	1906	12	1922	3658
% App. Total	0	100	0	0		0	0	0	0		0	1	98.7	0.2		0	0.2	99.2	0.6		
PHF	.000	.250	.000	.000	.250	.000	.000	.000	.000	.000	.000	.643	.827	.500	.826	.000	.500	.961	.600	.963	.899

SW 40th Street & SW 70th Avenue

File Name : TMC-11 SW 40th Street & SW 70th Avenue
Site Code : 00000000
Start Date : 9/18/2018
Page No : 9

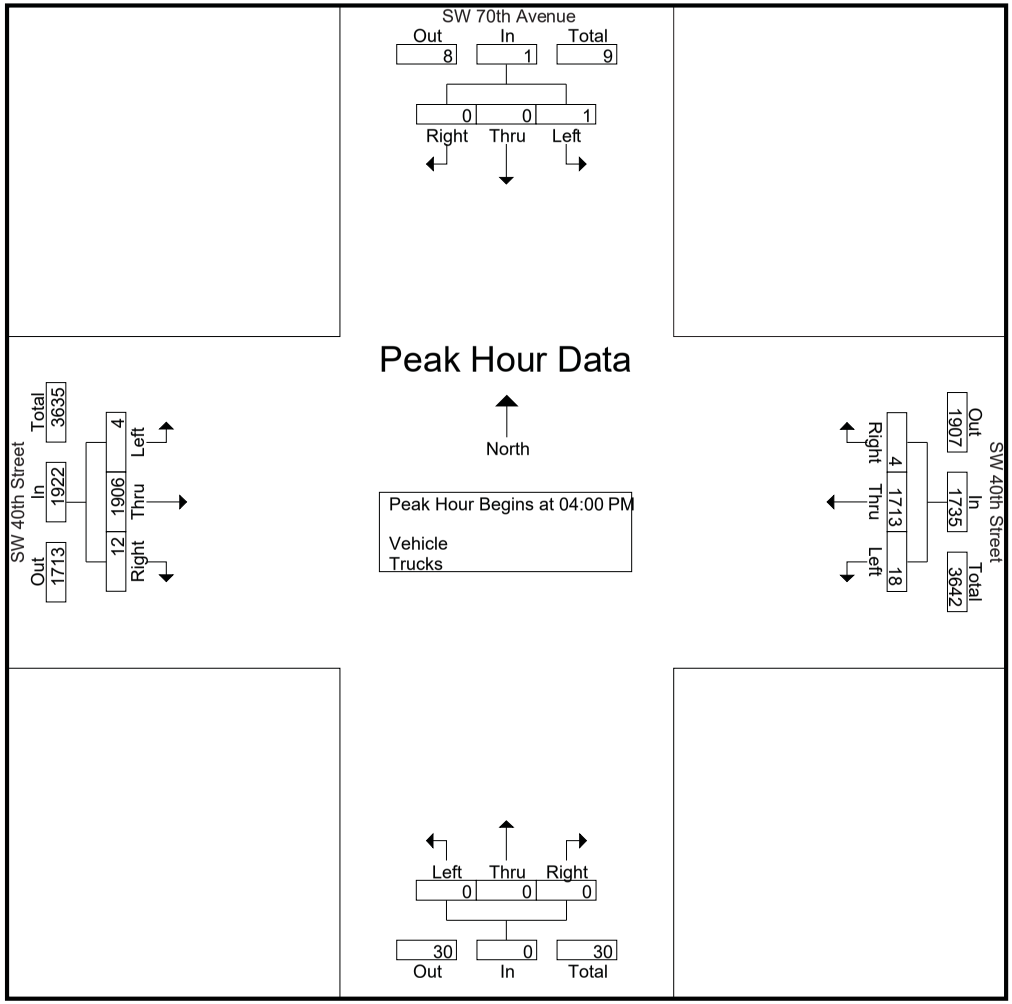

SW 40th Street & SW 69th Avenue

File Name : TMC-12 SW 40th Street & SW 69th Avenue
Site Code : 00000000
Start Date : 9/18/2018
Page No : 1

Groups Printed- Vehicle - Trucks

	SW 69th Avenue Southbound					SW 69th Avenue Northbound					SW 40th Street Westbound					SW 40th Street Eastbound					
Start Time	U-Turns	Left	Thru	Right	App. Total	U-Turns	Left	Thru	Right	App. Total	U-Turns	Left	Thru	Right	App. Total	U-Turns	Left	Thru	Right	App. Total	Int. Total
06:00 AM	0	0	0	5	5	0	0	0	10	10	0	3	126	0	129	1	3	289	5	298	442
06:15 AM	0	0	0	7	7	0	0	0	9	9	0	0	169	0	169	1	6	472	12	491	676
06:30 AM	0	0	0	6	6	0	0	0	7	7	0	4	251	0	255	2	2	607	8	619	887
06:45 AM	0	0	0	9	9	0	0	0	13	13	0	1	291	1	293	2	7	627	19	655	970
Total	0	0	0	27	27	0	0	0	39	39	0	8	837	1	846	6	18	1995	44	2063	2975
07:00 AM	0	0	0	12	12	0	0	0	16	16	1	4	328	0	333	2	12	674	33	721	1082
07:15 AM	0	0	0	12	12	0	0	0	17	17	0	4	419	1	424	3	31	645	28	707	1160
07:30 AM	0	0	0	20	20	0	0	0	24	24	1	1	499	2	503	7	18	617	14	656	1203
07:45 AM	0	0	0	23	23	0	0	0	15	15	0	2	484	3	489	1	37	628	26	692	1219
Total	0	0	0	67	67	0	0	0	72	72	2	11	1730	6	1749	13	98	2564	101	2776	4664
08:00 AM	0	0	0	22	22	0	0	0	17	17	0	4	452	6	462	2	40	659	18	719	1220
08:15 AM	0	0	0	22	22	0	0	0	6	6	0	4	507	5	516	4	33	716	17	770	1314
08:30 AM	0	0	0	21	21	0	0	0	12	12	0	1	475	6	482	1	42	635	20	698	1213
08:45 AM	0	0	0	23	23	0	0	0	9	9	0	3	406	2	411	2	24	502	20	548	991
Total	0	0	0	88	88	0	0	0	44	44	0	12	1840	19	1871	9	139	2512	75	2735	4738
*** BREAK ***																					
11:30 AM	0	0	0	9	9	0	0	0	13	13	2	8	448	6	464	6	5	382	43	436	922
11:45 AM	0	0	0	16	16	0	0	0	21	21	2	16	508	8	534	5	6	482	38	531	1102
Total	0	0	0	25	25	0	0	0	34	34	4	24	956	14	998	11	11	864	81	967	2024
12:00 PM	0	0	0	23	23	0	0	0	28	28	1	9	470	3	483	3	8	425	36	472	1006
12:15 PM	0	0	0	19	19	0	0	0	35	35	0	9	492	7	508	12	10	406	36	464	1026
12:30 PM	0	0	0	18	18	0	0	0	16	16	1	11	485	2	499	4	7	405	33	449	982
12:45 PM	0	0	0	15	15	0	0	0	16	16	1	12	520	9	542	8	5	406	38	457	1030
Total	0	0	0	75	75	0	0	0	95	95	3	41	1967	21	2032	27	30	1642	143	1842	4044
01:00 PM	0	0	0	19	19	0	0	0	15	15	1	9	485	3	498	6	6	351	58	421	953
01:15 PM	0	0	0	18	18	0	0	0	19	19	3	6	507	3	519	7	7	338	40	392	948
*** BREAK ***																					
Total	0	0	0	37	37	0	0	0	34	34	4	15	992	6	1017	13	13	689	98	813	1901
*** BREAK ***																					

SW 40th Street & SW 69th Avenue

File Name : TMC-12 SW 40th Street & SW 69th Avenue
Site Code : 00000000
Start Date : 9/18/2018
Page No : 2

Groups Printed- Vehicle - Trucks

	SW 69th Avenue Southbound					SW 69th Avenue Northbound					SW 40th Street Westbound					SW 40th Street Eastbound					
Start Time	U-Turns	Left	Thru	Right	App. Total	U-Turns	Left	Thru	Right	App. Total	U-Turns	Left	Thru	Right	App. Total	U-Turns	Left	Thru	Right	App. Total	Int. Total
04:00 PM	0	0	0	29	29	0	0	0	18	18	2	4	513	1	520	2	15	379	33	429	996
04:15 PM	0	0	0	20	20	0	0	0	13	13	0	5	398	0	403	5	11	316	98	430	866
04:30 PM	0	0	0	25	25	0	0	0	18	18	0	6	509	2	517	1	1	354	37	393	953
04:45 PM	0	0	0	21	21	0	0	0	12	12	1	4	403	1	409	2	11	394	23	430	872
Total	0	0	0	95	95	0	0	0	61	61	3	19	1823	4	1849	10	38	1443	191	1682	3687
05:00 PM	0	0	0	27	27	0	0	0	18	18	0	6	383	3	392	8	18	359	30	415	852
05:15 PM	0	0	0	35	35	0	0	0	13	13	0	5	356	0	361	2	16	406	36	460	869
05:30 PM	0	0	0	23	23	0	0	0	9	9	0	6	341	1	348	2	7	379	34	422	802
05:45 PM	0	0	0	27	27	0	0	0	12	12	0	3	287	0	290	1	7	422	31	461	790
Total	0	0	0	112	112	0	0	0	52	52	0	20	1367	4	1391	13	48	1566	131	1758	3313
06:00 PM	0	0	0	19	19	0	0	0	21	21	1	8	259	1	269	7	9	422	20	458	767
06:15 PM	0	0	0	37	37	0	0	0	9	9	1	4	357	1	363	4	6	353	21	384	793
06:30 PM	0	0	0	33	33	0	0	0	17	17	0	2	438	2	442	3	9	339	20	371	863
06:45 PM	0	0	0	14	14	0	0	0	15	15	2	4	504	6	516	6	12	320	27	365	910
Total	0	0	0	103	103	0	0	0	62	62	4	18	1558	10	1590	20	36	1434	88	1578	3333
Grand Total	0	0	0	629	629	0	0	0	493	493	20	168	13070	85	13343	122	431	14709	952	16214	30679
Apprch %	0	0	0	100		0	0	0	100		0.1	1.3	98	0.6		0.8	2.7	90.7	5.9		
Total %	0	0	0	2.1	2.1	0	0	0	1.6	1.6	0.1	0.5	42.6	0.3	43.5	0.4	1.4	47.9	3.1	52.9	
Vehicle	0	0	0	616	616	0	0	0	481	481	20	167	12772	85	13044	122	418	14436	943	15919	30060
% Vehicle	0	0	0	97.9	97.9	0	0	0	97.6	97.6	100	99.4	97.7	100	97.8	100	97	98.1	99.1	98.2	98
Trucks	0	0	0	13	13	0	0	0	12	12	0	1	298	0	299	0	13	273	9	295	619
% Trucks	0	0	0	2.1	2.1	0	0	0	2.4	2.4	0	0.6	2.3	0	2.2	0	3	1.9	0.9	1.8	2

SW 40th Street & SW 69th Avenue

File Name : TMC-12 SW 40th Street & SW 69th Avenue
Site Code : 00000000
Start Date : 9/18/2018
Page No : 3

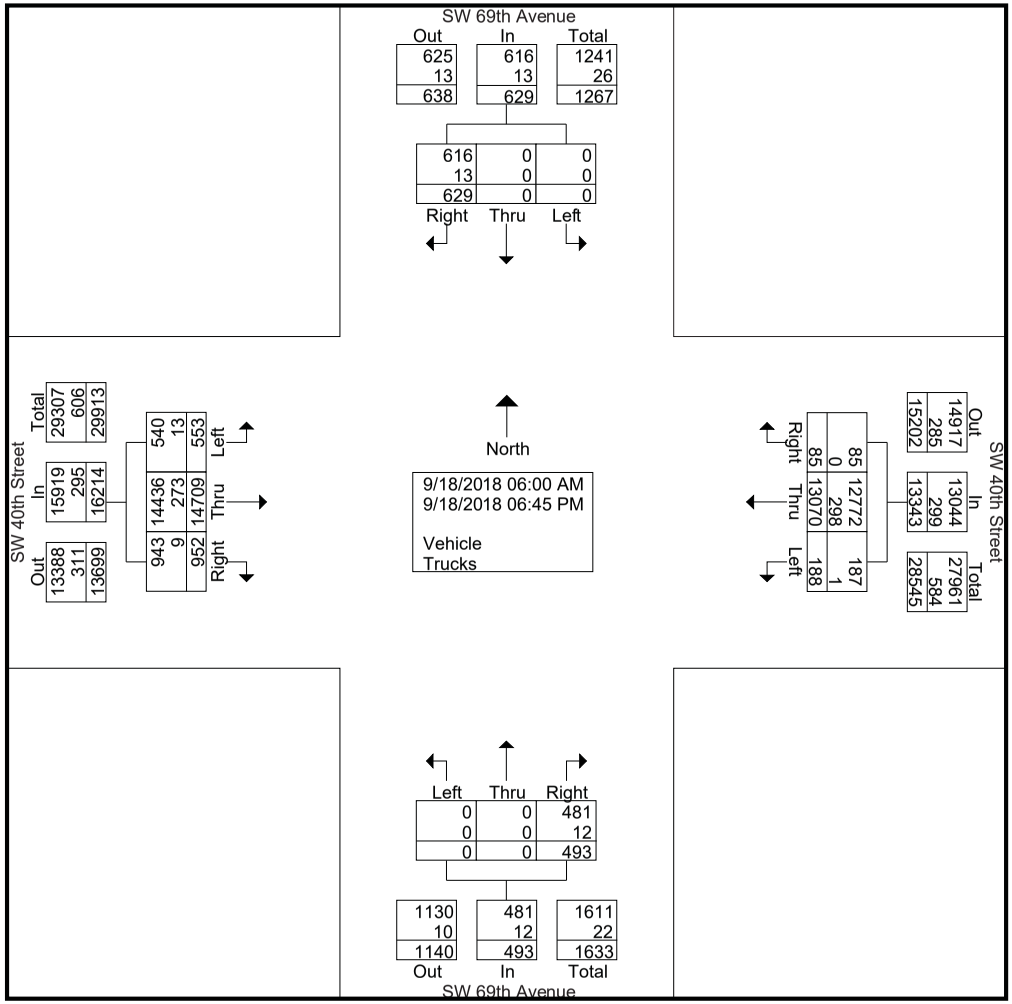

SW 40th Street & SW 69th Avenue

File Name : TMC-12 SW 40th Street & SW 69th Avenue
Site Code : 00000000
Start Date : 9/18/2018
Page No : 4

	SW 69th Avenue Southbound					SW 69th Avenue Northbound					SW 40th Street Westbound					SW 40th Street Eastbound					
Start Time	U-Turns	Left	Thru	Right	App. Total	U-Turns	Left	Thru	Right	App. Total	U-Turns	Left	Thru	Right	App. Total	U-Turns	Left	Thru	Right	App. Total	Int. Total
Peak Hour Analysis From 06:00 AM to 08:45 AM - Peak 1 of 1																					
Peak Hour for Entire Intersection Begins at 07:45 AM																					
07:45 AM	0	0	0	**23**	**23**	0	0	0	15	15	0	2	484	3	489	1	37	628	**26**	692	1219
08:00 AM	0	0	0	22	22	0	0	0	**17**	**17**	0	**4**	452	**6**	462	2	40	659	18	719	1220
08:15 AM	0	0	0	22	22	0	0	0	6	6	0	4	**507**	5	**516**	**4**	33	**716**	17	**770**	**1314**
08:30 AM	0	0	0	21	21	0	0	0	12	12	0	1	475	6	482	1	**42**	635	20	698	1213
Total Volume	0	0	0	88	88	0	0	0	50	50	0	11	1918	20	1949	8	152	2638	81	2879	4966
% App. Total	0	0	0	100		0	0	0	100		0	0.6	98.4	1		0.3	5.3	91.6	2.8		
PHF	.000	.000	.000	.957	.957	.000	.000	.000	.735	.735	.000	.688	.946	.833	.944	.500	.905	.921	.779	.935	.945

SW 40th Street & SW 69th Avenue

File Name : TMC-12 SW 40th Street & SW 69th Avenue
Site Code : 00000000
Start Date : 9/18/2018
Page No : 5

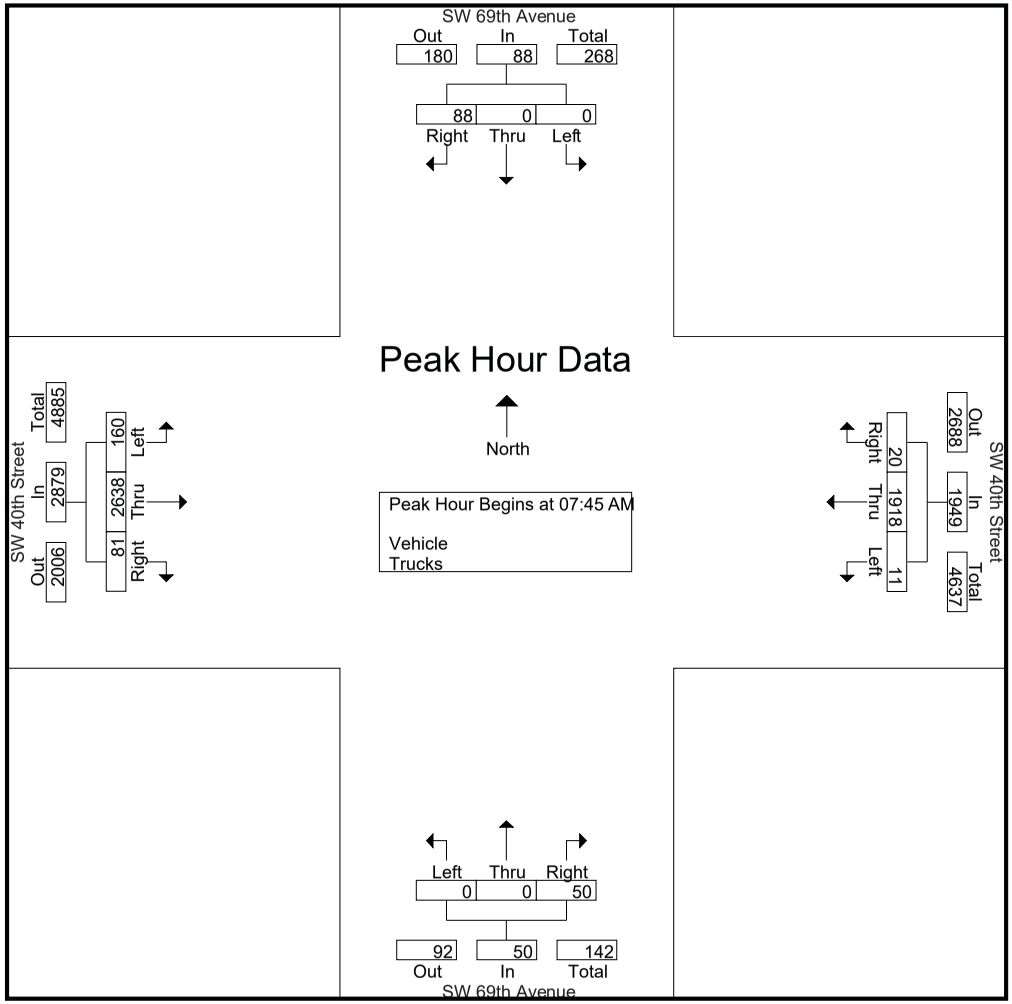

SW 40th Street & SW 69th Avenue

File Name : TMC-12 SW 40th Street & SW 69th Avenue
Site Code : 00000000
Start Date : 9/18/2018
Page No : 6

	SW 69th Avenue Southbound					SW 69th Avenue Northbound					SW 40th Street Westbound					SW 40th Street Eastbound					
Start Time	U-Turns	Left	Thru	Right	App. Total	U-Turns	Left	Thru	Right	App. Total	U-Turns	Left	Thru	Right	App. Total	U-Turns	Left	Thru	Right	App. Total	Int. Total
Peak Hour Analysis From 11:30 AM to 01:15 PM - Peak 1 of 1																					
Peak Hour for Entire Intersection Begins at 11:45 AM																					
11:45 AM	0	0	0	16	16	0	0	0	21	21	**2**	**16**	**508**	**8**	**534**	5	6	**482**	**38**	**531**	**1102**
12:00 PM	0	0	0	**23**	**23**	0	0	0	28	28	1	9	470	3	483	3	8	425	36	472	1006
12:15 PM	0	0	0	19	19	0	0	0	**35**	**35**	0	9	492	7	508	**12**	**10**	406	36	464	1026
12:30 PM	0	0	0	18	18	0	0	0	16	16	1	11	485	2	499	4	7	405	33	449	982
Total Volume	0	0	0	76	76	0	0	0	100	100	4	45	1955	20	2024	24	31	1718	143	1916	4116
% App. Total	0	0	0	100		0	0	0	100		0.2	2.2	96.6	1		1.3	1.6	89.7	7.5		
PHF	.000	.000	.000	.826	.826	.000	.000	.000	.714	.714	.500	.703	.962	.625	.948	.500	.775	.891	.941	.902	.934

SW 40th Street & SW 69th Avenue

File Name : TMC-12 SW 40th Street & SW 69th Avenue
Site Code : 00000000
Start Date : 9/18/2018
Page No : 7

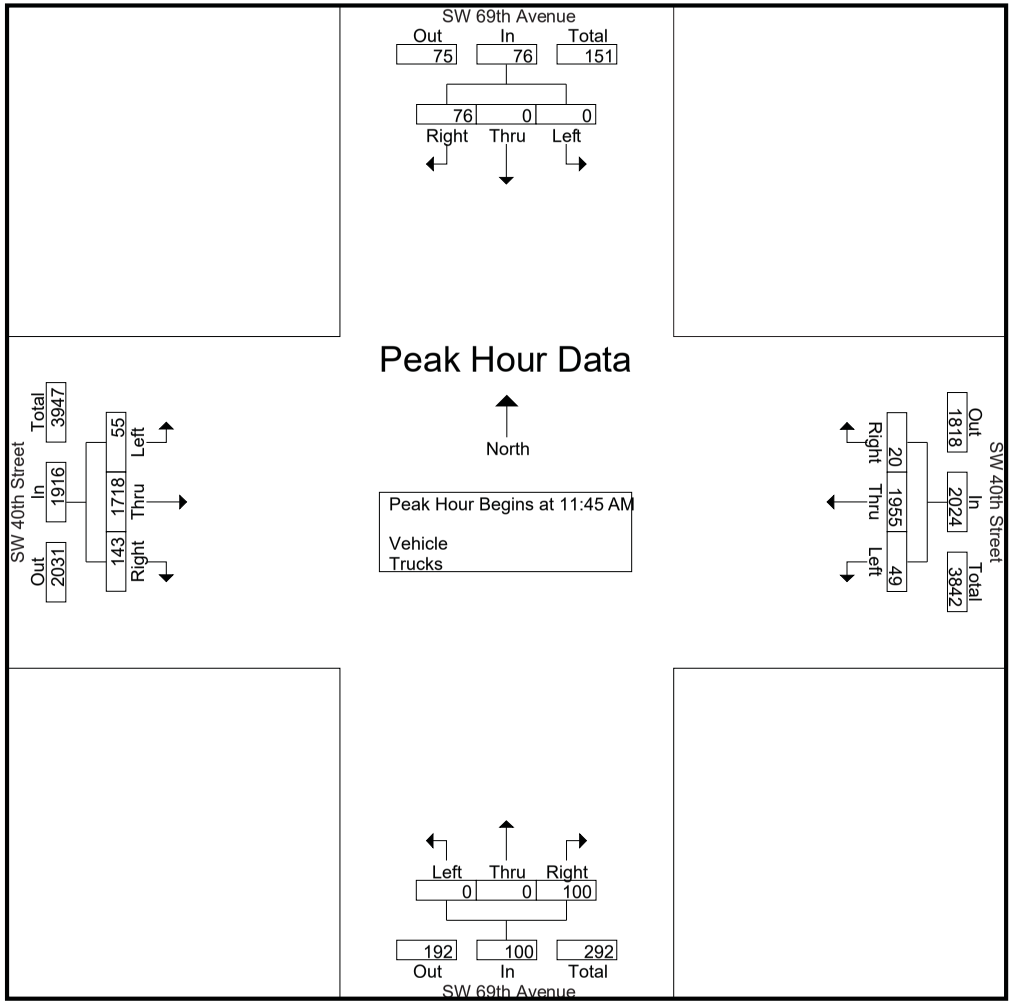

SW 40th Street & SW 69th Avenue

File Name : TMC-12 SW 40th Street & SW 69th Avenue
Site Code : 00000000
Start Date : 9/18/2018
Page No : 8

	SW 69th Avenue Southbound					SW 69th Avenue Northbound					SW 40th Street Westbound					SW 40th Street Eastbound					
Start Time	U-Turns	Left	Thru	Right	App. Total	U-Turns	Left	Thru	Right	App. Total	U-Turns	Left	Thru	Right	App. Total	U-Turns	Left	Thru	Right	App. Total	Int. Total
Peak Hour Analysis From 04:00 PM to 06:45 PM - Peak 1 of 1																					
Peak Hour for Entire Intersection Begins at 04:00 PM																					
04:00 PM	0	0	0	**29**	**29**	0	0	0	**18**	**18**	**2**	4	**513**	1	**520**	2	**15**	379	33	429	**996**
04:15 PM	0	0	0	20	20	0	0	0	13	13	0	5	398	0	403	**5**	11	316	**98**	**430**	866
04:30 PM	0	0	0	25	25	0	0	0	18	18	0	**6**	509	**2**	517	1	1	354	37	393	953
04:45 PM	0	0	0	21	21	0	0	0	12	12	1	4	403	1	409	2	11	**394**	23	430	872
Total Volume	0	0	0	95	95	0	0	0	61	61	3	19	1823	4	1849	10	38	1443	191	1682	3687
% App. Total	0	0	0	100		0	0	0	100		0.2	1	98.6	0.2		0.6	2.3	85.8	11.4		
PHF	.000	.000	.000	.819	.819	.000	.000	.000	.847	.847	.375	.792	.888	.500	.889	.500	.633	.916	.487	.978	.925

SW 40th Street & SW 69th Avenue

File Name : TMC-12 SW 40th Street & SW 69th Avenue
Site Code : 00000000
Start Date : 9/18/2018
Page No : 9

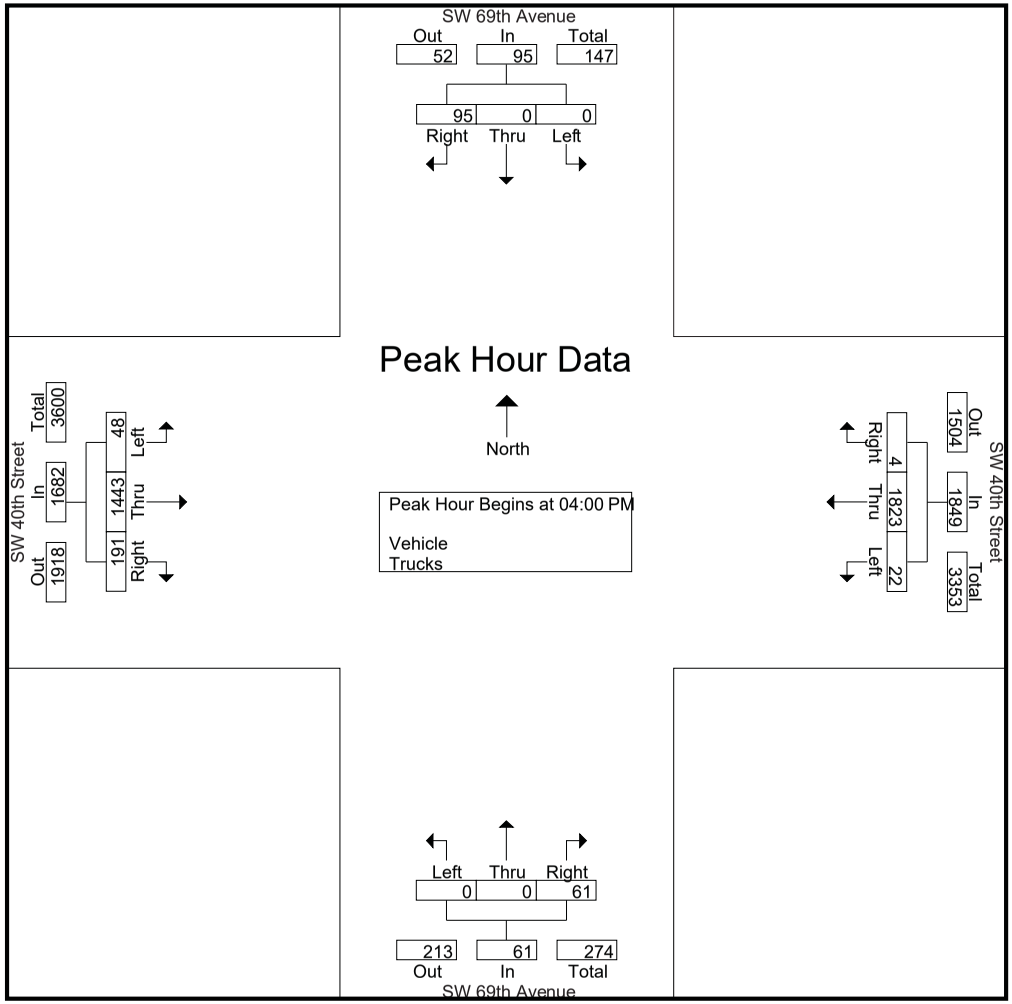

SW 56th Street & SW 69th Avenue

File Name : TMC-13 SW 56th Street & SW 69th Avenue
Site Code : 00000000
Start Date : 9/18/2018
Page No : 1

Groups Printed- Vehicle - Trucks

	SW 69th Avenue Southbound					SW 69th Avenue Northbound					SW 56th Street Westbound					SW 56th Street Eastbound					
Start Time	U-Turns	Left	Thru	Right	App. Total	U-Turns	Left	Thru	Right	App. Total	U-Turns	Left	Thru	Right	App. Total	U-Turns	Left	Thru	Right	App. Total	Int. Total
06:00 AM	0	0	0	0	0	0	2	0	0	2	0	0	60	0	60	0	0	147	2	149	211
06:15 AM	0	0	0	0	0	0	2	0	0	2	0	0	65	0	65	0	0	251	0	251	318
06:30 AM	0	0	0	0	0	0	1	0	2	3	0	1	105	0	106	0	0	382	5	387	496
06:45 AM	0	0	0	0	0	0	0	0	2	2	0	0	151	0	151	0	0	410	2	412	565
Total	0	0	0	0	0	0	5	0	4	9	0	1	381	0	382	0	0	1190	9	1199	1590
07:00 AM	0	0	0	0	0	0	2	0	3	5	0	6	180	0	186	0	0	435	11	446	637
07:15 AM	0	0	0	0	0	0	2	0	0	2	0	13	192	0	205	0	0	343	18	361	568
07:30 AM	0	0	0	0	0	0	4	0	5	9	0	16	178	0	194	0	0	367	35	402	605
07:45 AM	0	0	0	0	0	0	8	0	7	15	0	17	185	0	202	0	0	315	41	356	573
Total	0	0	0	0	0	0	16	0	15	31	0	52	735	0	787	0	0	1460	105	1565	2383
08:00 AM	0	0	0	0	0	0	4	0	9	13	0	15	195	0	210	0	0	365	37	402	625
08:15 AM	0	0	0	0	0	0	14	0	9	23	0	18	223	0	241	0	0	377	39	416	680
08:30 AM	0	0	0	0	0	0	11	0	5	16	0	2	219	0	221	0	0	317	11	328	565
08:45 AM	0	0	0	0	0	0	5	0	3	8	0	1	192	0	193	0	0	354	7	361	562
Total	0	0	0	0	0	0	34	0	26	60	0	36	829	0	865	0	0	1413	94	1507	2432
*** BREAK ***																					
11:30 AM	0	0	0	0	0	0	1	0	1	2	1	0	170	0	171	0	0	238	3	241	414
11:45 AM	0	0	0	0	0	0	2	0	5	7	0	2	193	0	195	0	0	219	3	222	424
Total	0	0	0	0	0	0	3	0	6	9	1	2	363	0	366	0	0	457	6	463	838
12:00 PM	0	0	0	0	0	0	2	0	2	4	0	4	201	0	205	0	0	233	3	236	445
12:15 PM	0	0	0	0	0	0	3	0	2	5	0	2	163	0	165	0	0	212	5	217	387
12:30 PM	0	0	0	0	0	0	2	0	0	2	0	2	247	0	249	0	0	173	4	177	428
12:45 PM	0	0	0	0	0	0	3	0	2	5	0	1	220	0	221	0	0	204	2	206	432
Total	0	0	0	0	0	0	10	0	6	16	0	9	831	0	840	0	0	822	14	836	1692
01:00 PM	0	0	0	0	0	0	2	0	4	6	1	2	197	0	200	0	0	194	3	197	403
01:15 PM	0	0	0	0	0	0	3	0	3	6	0	4	211	0	215	0	0	177	2	179	400
*** BREAK ***																					
Total	0	0	0	0	0	0	5	0	7	12	1	6	408	0	415	0	0	371	5	376	803
02:00 PM	0	0	0	0	0	0	0	0	5	5	1	4	250	0	255	0	0	216	6	222	482
02:15 PM	0	0	0	0	0	0	2	0	2	4	0	7	261	0	268	0	0	252	9	261	533
02:30 PM	0	0	0	0	0	0	2	0	2	4	1	8	329	0	338	0	0	224	12	236	578
02:45 PM	0	0	0	0	0	0	2	0	1	3	0	7	233	0	240	0	0	202	23	225	468
Total	0	0	0	0	0	0	6	0	10	16	2	26	1073	0	1101	0	0	894	50	944	2061

SW 56th Street & SW 69th Avenue

File Name : TMC-13 SW 56th Street & SW 69th Avenue
Site Code : 00000000
Start Date : 9/18/2018
Page No : 2

Groups Printed- Vehicle - Trucks

	SW 69th Avenue Southbound					SW 69th Avenue Northbound					SW 56th Street Westbound					SW 56th Street Eastbound					
Start Time	U-Turns	Left	Thru	Right	App. Total	U-Turns	Left	Thru	Right	App. Total	U-Turns	Left	Thru	Right	App. Total	U-Turns	Left	Thru	Right	App. Total	Int. Total
*** BREAK ***																					
04:00 PM	0	0	0	0	0	0	5	0	3	8	0	1	348	0	349	0	0	199	11	210	567
04:15 PM	0	0	0	0	0	0	2	0	3	5	0	2	374	0	376	0	0	195	6	201	582
04:30 PM	0	0	0	0	0	0	1	0	7	8	0	4	374	0	378	0	0	214	6	220	606
04:45 PM	0	0	0	0	0	0	1	0	1	2	0	8	369	0	377	0	0	217	6	223	602
Total	0	0	0	0	0	0	9	0	14	23	0	15	1465	0	1480	0	0	825	29	854	2357
05:00 PM	0	0	0	0	0	0	10	0	5	15	0	2	348	0	350	0	0	199	5	204	569
05:15 PM	0	0	0	0	0	0	2	0	12	14	0	8	332	0	340	0	0	195	4	199	553
05:30 PM	0	0	0	0	0	0	2	0	8	10	0	10	366	0	376	0	0	211	5	216	602
05:45 PM	0	0	0	0	0	0	3	0	6	9	0	7	347	0	354	0	0	204	5	209	572
Total	0	0	0	0	0	0	17	0	31	48	0	27	1393	0	1420	0	0	809	19	828	2296
06:00 PM	0	0	0	0	0	0	0	0	3	3	0	4	326	0	330	0	0	232	5	237	570
06:15 PM	0	0	0	0	0	0	2	0	2	4	0	3	313	0	316	0	0	195	1	196	516
06:30 PM	0	0	0	0	0	0	2	0	2	4	1	1	327	0	329	0	0	177	3	180	513
06:45 PM	0	0	0	0	0	0	1	0	2	3	0	3	347	0	350	0	0	177	3	180	533
Total	0	0	0	0	0	0	5	0	9	14	1	11	1313	0	1325	0	0	781	12	793	2132
Grand Total	0	0	0	0	0	0	110	0	128	238	5	185	8791	0	8981	0	0	9022	343	9365	18584
Apprch %	0	0	0	0		0	46.2	0	53.8		0.1	2.1	97.9	0		0	0	96.3	3.7		
Total %	0	0	0	0	0	0	0.6	0	0.7	1.3	0	1	47.3	0	48.3	0	0	48.5	1.8	50.4	
Vehicle	0	0	0	0	0	0	109	0	128	237	5	182	8637	0	8824	0	0	8853	340	9193	18254
% Vehicle	0	0	0	0	0	0	99.1	0	100	99.6	100	98.4	98.2	0	98.3	0	0	98.1	99.1	98.2	98.2
Trucks	0	0	0	0	0	0	1	0	0	1	0	3	154	0	157	0	0	169	3	172	330
% Trucks	0	0	0	0	0	0	0.9	0	0	0.4	0	1.6	1.8	0	1.7	0	0	1.9	0.9	1.8	1.8

SW 56th Street & SW 69th Avenue

File Name : TMC-13 SW 56th Street & SW 69th Avenue
Site Code : 00000000
Start Date : 9/18/2018
Page No : 3

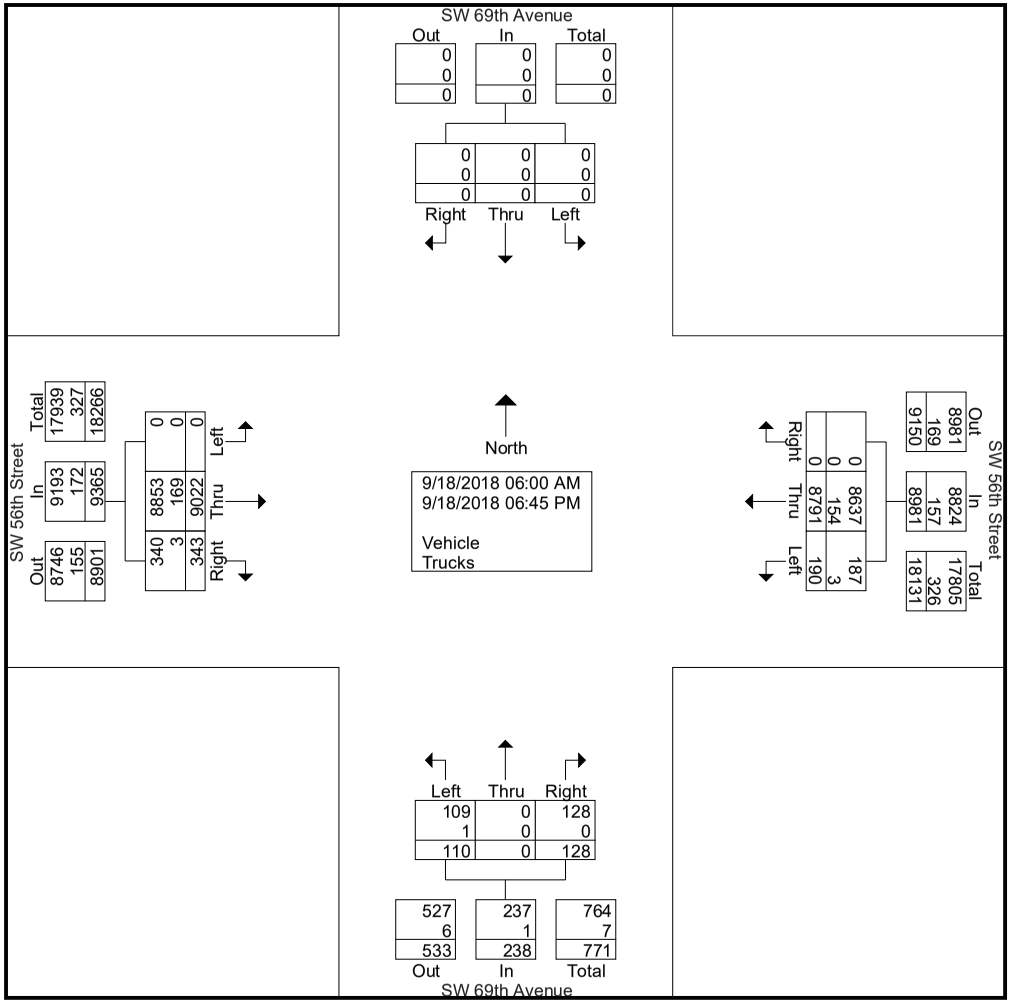

SW 56th Street & SW 69th Avenue

File Name : TMC-13 SW 56th Street & SW 69th Avenue
Site Code : 00000000
Start Date : 9/18/2018
Page No : 4

	SW 69th Avenue Southbound					SW 69th Avenue Northbound					SW 56th Street Westbound					SW 56th Street Eastbound					
Start Time	U-Turns	Left	Thru	Right	App. Total	U-Turns	Left	Thru	Right	App. Total	U-Turns	Left	Thru	Right	App. Total	U-Turns	Left	Thru	Right	App. Total	Int. Total
Peak Hour Analysis From 06:00 AM to 08:45 AM - Peak 1 of 1																					
Peak Hour for Entire Intersection Begins at 07:30 AM																					
07:30 AM	0	0	0	0	0	0	4	0	5	9	0	16	178	0	194	0	0	367	35	402	605
07:45 AM	0	0	0	0	0	0	8	0	7	15	0	17	185	0	202	0	0	315	**41**	356	573
08:00 AM	0	0	0	0	0	0	4	0	**9**	13	0	15	195	0	210	0	0	365	37	402	625
08:15 AM	0	0	0	0	0	0	**14**	0	9	**23**	0	**18**	**223**	0	**241**	0	0	**377**	39	**416**	**680**
Total Volume	0	0	0	0	0	0	30	0	30	60	0	66	781	0	847	0	0	1424	152	1576	2483
% App. Total	0	0	0	0		0	50	0	50		0	7.8	92.2	0		0	0	90.4	9.6		
PHF	.000	.000	.000	.000	.000	.000	.536	.000	.833	.652	.000	.917	.876	.000	.879	.000	.000	.944	.927	.947	.913

SW 56th Street & SW 69th Avenue

File Name : TMC-13 SW 56th Street & SW 69th Avenue
Site Code : 00000000
Start Date : 9/18/2018
Page No : 5

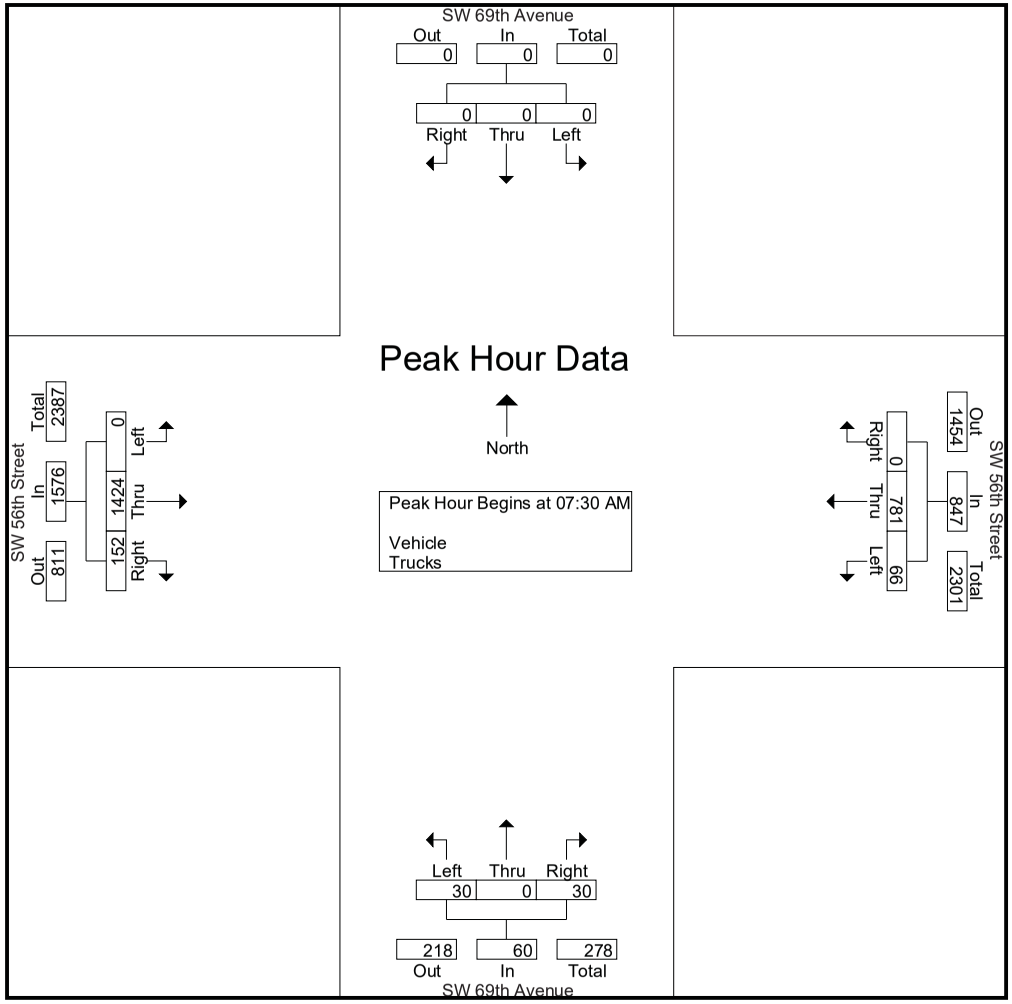

SW 56th Street & SW 69th Avenue

File Name : TMC-13 SW 56th Street & SW 69th Avenue
Site Code : 00000000
Start Date : 9/18/2018
Page No : 6

	SW 69th Avenue Southbound					SW 69th Avenue Northbound					SW 56th Street Westbound					SW 56th Street Eastbound					
Start Time	U-Turns	Left	Thru	Right	App. Total	U-Turns	Left	Thru	Right	App. Total	U-Turns	Left	Thru	Right	App. Total	U-Turns	Left	Thru	Right	App. Total	Int. Total
Peak Hour Analysis From 11:30 AM to 01:15 PM - Peak 1 of 1																					
Peak Hour for Entire Intersection Begins at 12:00 PM																					
12:00 PM	0	0	0	0	0	0	2	0	**2**	4	0	**4**	201	0	205	0	0	**233**	3	**236**	**445**
12:15 PM	0	0	0	0	0	0	**3**	0	2	**5**	0	2	163	0	165	0	0	212	**5**	217	387
12:30 PM	0	0	0	0	0	0	2	0	0	2	0	2	**247**	0	**249**	0	0	173	4	177	428
12:45 PM	0	0	0	0	0	0	3	0	2	5	0	1	220	0	221	0	0	204	2	206	432
Total Volume	0	0	0	0	0	0	10	0	6	16	0	9	831	0	840	0	0	822	14	836	1692
% App. Total	0	0	0	0		0	62.5	0	37.5		0	1.1	98.9	0		0	0	98.3	1.7		
PHF	.000	.000	.000	.000	.000	.000	.833	.000	.750	.800	.000	.563	.841	.000	.843	.000	.000	.882	.700	.886	.951

SW 56th Street & SW 69th Avenue

File Name : TMC-13 SW 56th Street & SW 69th Avenue
Site Code : 00000000
Start Date : 9/18/2018
Page No : 7

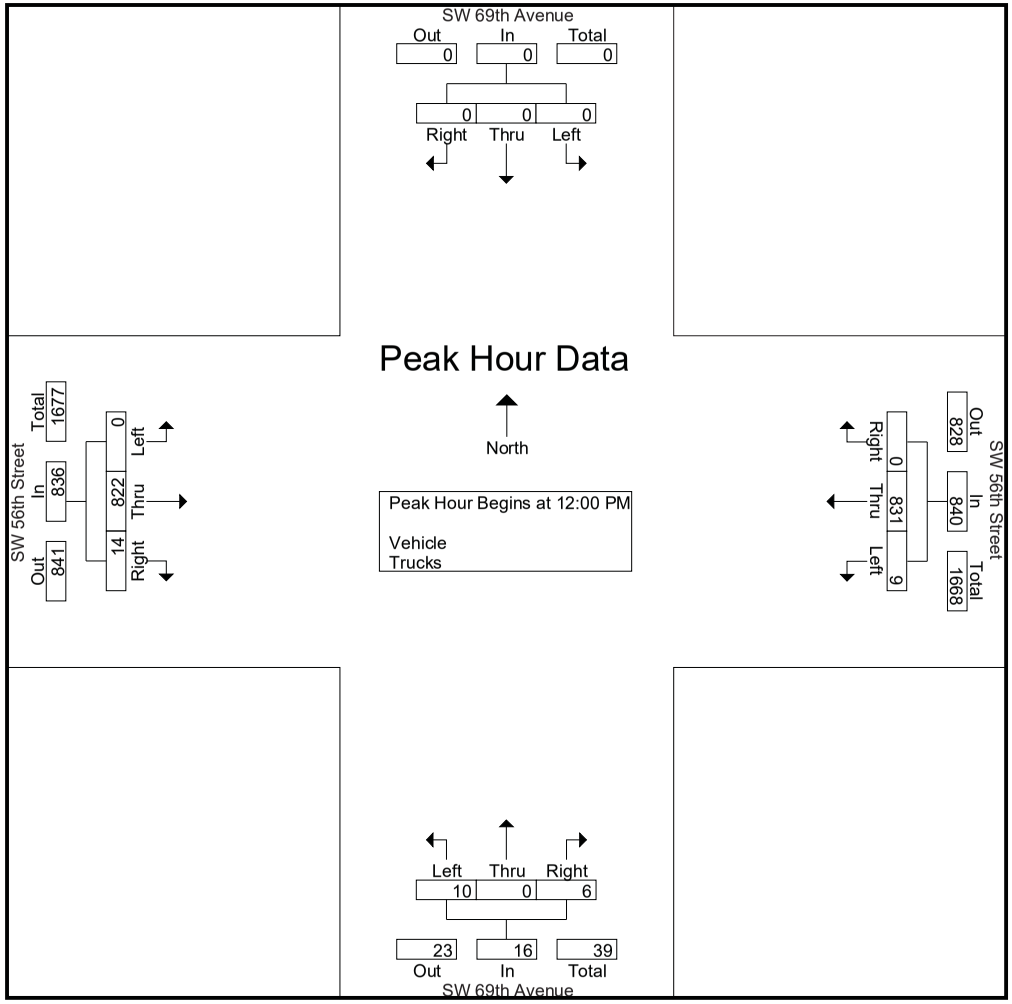

SW 56th Street & SW 69th Avenue

File Name : TMC-13 SW 56th Street & SW 69th Avenue
Site Code : 00000000
Start Date : 9/18/2018
Page No : 8

	SW 69th Avenue Southbound					SW 69th Avenue Northbound					SW 56th Street Westbound					SW 56th Street Eastbound					
Start Time	U-Turns	Left	Thru	Right	App. Total	U-Turns	Left	Thru	Right	App. Total	U-Turns	Left	Thru	Right	App. Total	U-Turns	Left	Thru	Right	App. Total	Int. Total
Peak Hour Analysis From 02:00 PM to 02:45 PM - Peak 1 of 1																					
Peak Hour for Entire Intersection Begins at 02:00 PM																					
02:00 PM	0	0	0	0	0	0	0	0	**5**	**5**	**1**	4	250	0	255	0	0	216	6	222	482
02:15 PM	0	0	0	0	0	0	**2**	0	2	4	0	7	261	0	268	0	0	**252**	9	**261**	533
02:30 PM	0	0	0	0	0	0	2	0	2	4	1	**8**	**329**	0	**338**	0	0	224	12	236	**578**
02:45 PM	0	0	0	0	0	0	2	0	1	3	0	7	233	0	240	0	0	202	**23**	225	468
Total Volume	0	0	0	0	0	0	6	0	10	16	2	26	1073	0	1101	0	0	894	50	944	2061
% App. Total	0	0	0	0		0	37.5	0	62.5		0.2	2.4	97.5	0		0	0	94.7	5.3		
PHF	.000	.000	.000	.000	.000	.000	.750	.000	.500	.800	.500	.813	.815	.000	.814	.000	.000	.887	.543	.904	.891

SW 56th Street & SW 69th Avenue

File Name : TMC-13 SW 56th Street & SW 69th Avenue
Site Code : 00000000
Start Date : 9/18/2018
Page No : 9

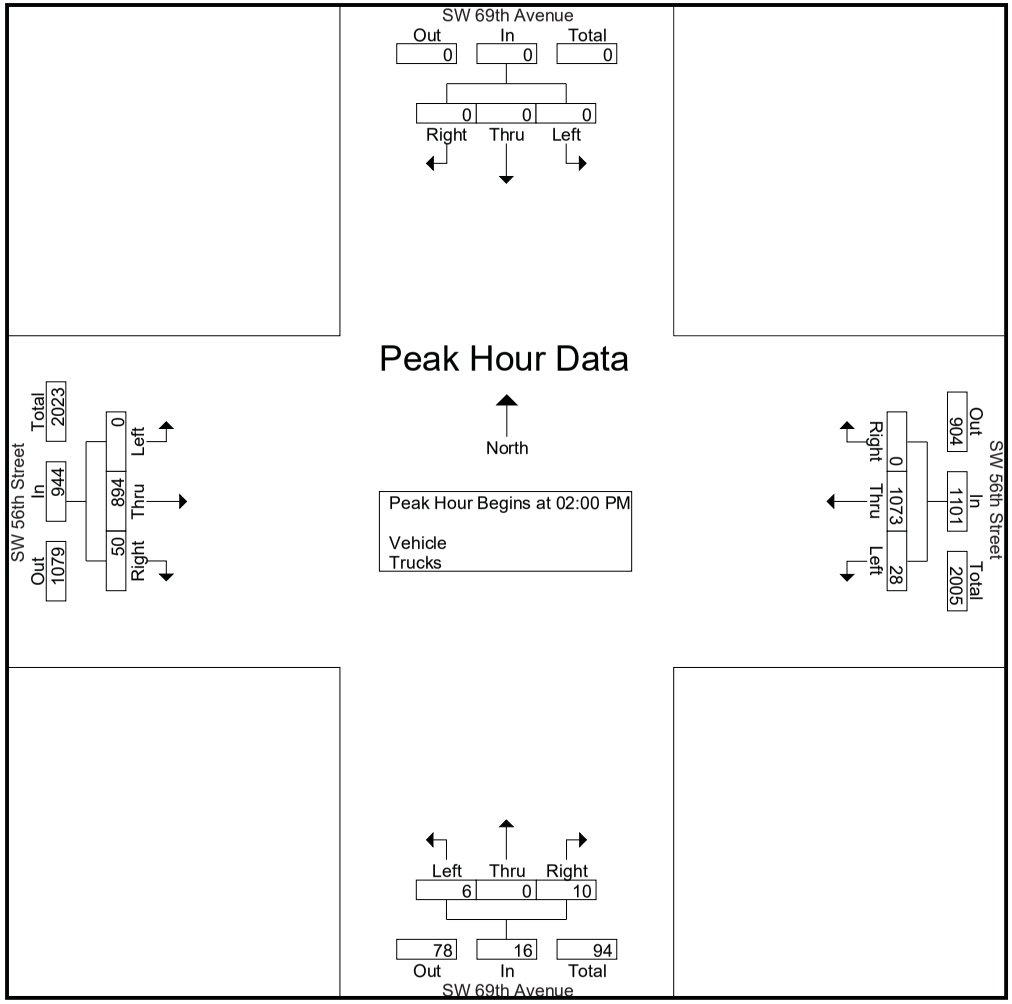

SW 56th Street & SW 69th Avenue

File Name : TMC-13 SW 56th Street & SW 69th Avenue
Site Code : 00000000
Start Date : 9/18/2018
Page No : 10

	SW 69th Avenue Southbound					SW 69th Avenue Northbound					SW 56th Street Westbound					SW 56th Street Eastbound					
Start Time	U-Turns	Left	Thru	Right	App. Total	U-Turns	Left	Thru	Right	App. Total	U-Turns	Left	Thru	Right	App. Total	U-Turns	Left	Thru	Right	App. Total	Int. Total
Peak Hour Analysis From 04:00 PM to 06:45 PM - Peak 1 of 1																					
Peak Hour for Entire Intersection Begins at 04:15 PM																					
04:15 PM	0	0	0	0	0	0	2	0	3	5	0	2	**374**	0	376	0	0	195	**6**	201	582
04:30 PM	0	0	0	0	0	0	1	0	**7**	8	0	4	374	0	**378**	0	0	214	6	220	**606**
04:45 PM	0	0	0	0	0	0	1	0	1	2	0	**8**	369	0	377	0	0	**217**	6	**223**	602
05:00 PM	0	0	0	0	0	0	**10**	0	5	**15**	0	2	348	0	350	0	0	199	5	204	569
Total Volume	0	0	0	0	0	0	14	0	16	30	0	16	1465	0	1481	0	0	825	23	848	2359
% App. Total	0	0	0	0		0	46.7	0	53.3		0	1.1	98.9	0		0	0	97.3	2.7		
PHF	.000	.000	.000	.000	.000	.000	.350	.000	.571	.500	.000	.500	.979	.000	.979	.000	.000	.950	.958	.951	.973

SW 56th Street & SW 69th Avenue

File Name : TMC-13 SW 56th Street & SW 69th Avenue
Site Code : 00000000
Start Date : 9/18/2018
Page No : 11

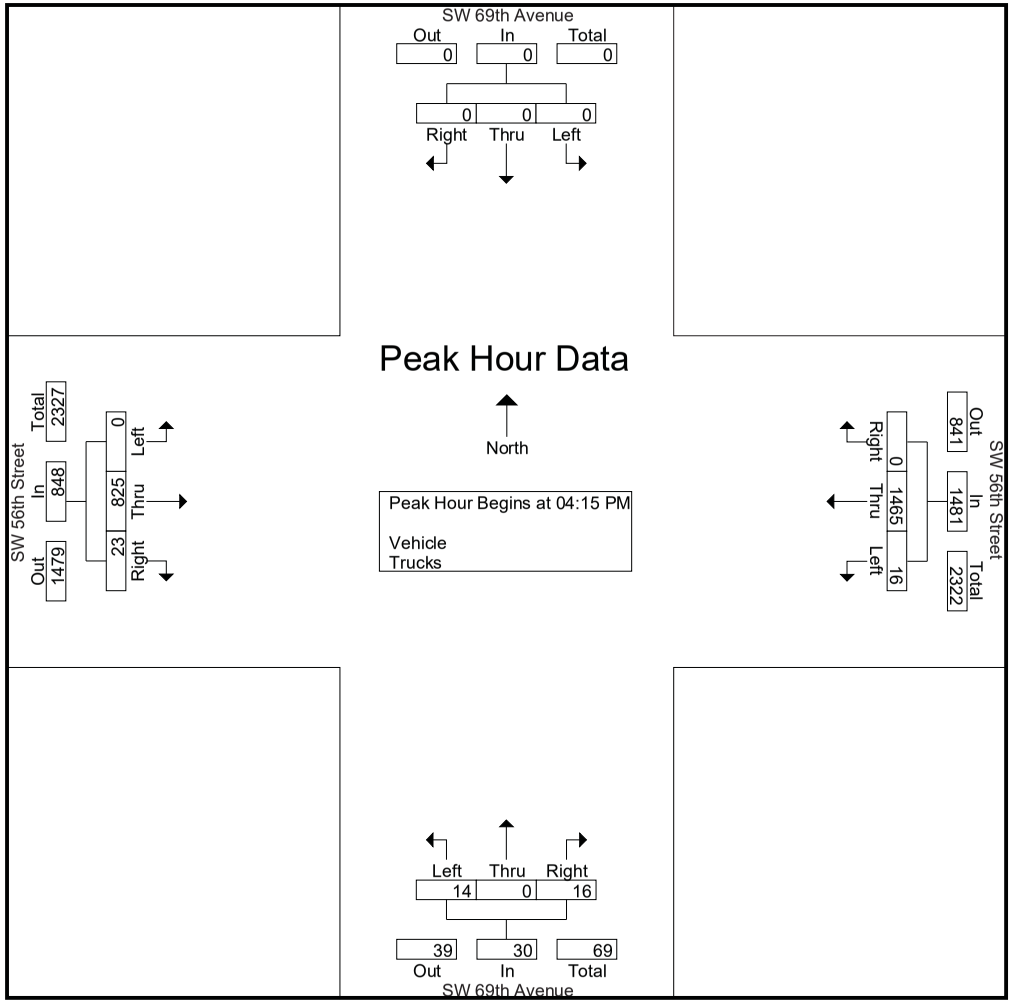

SW 56th Street & SW 69th Court

File Name : TMC-14 SW 56th Street & SW 69th Court
Site Code : 00000000
Start Date : 9/18/2018
Page No : 1

Groups Printed- Vehicle - Trucks

	SW 69th Court Southbound					SW 69th Court Northbound					SW 56th Street Westbound					SW 56th Street Eastbound					
Start Time	U-Turns	Left	Thru	Right	App. Total	U-Turns	Left	Thru	Right	App. Total	U-Turns	Left	Thru	Right	App. Total	U-Turns	Left	Thru	Right	App. Total	Int. Total
06:00 AM	0	0	0	0	0	0	0	0	2	2	0	0	61	0	61	0	0	146	0	146	209
06:15 AM	0	0	0	0	0	0	0	0	0	0	0	1	61	0	62	0	0	261	0	261	323
06:30 AM	0	0	0	0	0	0	1	0	2	3	0	0	107	0	107	0	0	381	1	382	492
06:45 AM	0	0	0	0	0	0	1	0	6	7	0	1	141	0	142	0	0	412	2	414	563
Total	0	0	0	0	0	0	2	0	10	12	0	2	370	0	372	0	0	1200	3	1203	1587
07:00 AM	0	0	0	0	0	0	0	0	7	7	0	5	180	0	185	0	0	447	6	453	645
07:15 AM	0	0	0	0	0	0	0	0	4	4	0	6	171	0	177	0	0	359	12	371	552
07:30 AM	0	0	0	0	0	0	1	0	6	7	0	6	155	0	161	0	0	423	12	435	603
07:45 AM	0	0	0	0	0	0	1	0	8	9	0	1	147	0	148	0	0	347	30	377	534
Total	0	0	0	0	0	0	2	0	25	27	0	18	653	0	671	0	0	1576	60	1636	2334
08:00 AM	0	0	0	0	0	0	0	0	14	14	0	9	186	0	195	0	0	406	20	426	635
08:15 AM	0	0	0	0	0	0	2	0	13	15	0	11	230	0	241	0	0	404	12	416	672
08:30 AM	0	0	0	0	0	0	2	0	16	18	0	0	221	0	221	0	0	316	3	319	558
08:45 AM	0	0	0	0	0	0	1	0	14	15	0	3	197	0	200	0	0	348	1	349	564
Total	0	0	0	0	0	0	5	0	57	62	0	23	834	0	857	0	0	1474	36	1510	2429
*** BREAK ***																					
11:30 AM	0	0	0	0	0	0	2	0	3	5	0	1	174	0	175	0	0	243	3	246	426
11:45 AM	0	0	0	0	0	0	1	0	4	5	0	1	196	0	197	0	0	213	2	215	417
Total	0	0	0	0	0	0	3	0	7	10	0	2	370	0	372	0	0	456	5	461	843
12:00 PM	0	0	0	0	0	0	0	0	6	6	0	2	200	0	202	0	0	230	2	232	440
12:15 PM	0	0	0	0	0	0	0	0	0	0	0	1	167	0	168	0	0	224	0	224	392
12:30 PM	0	0	0	0	0	0	0	0	2	2	0	2	247	0	249	0	0	175	1	176	427
12:45 PM	0	0	0	0	0	0	1	0	4	5	0	2	231	0	233	0	0	210	2	212	450
Total	0	0	0	0	0	0	1	0	12	13	0	7	845	0	852	0	0	839	5	844	1709
01:00 PM	0	0	0	0	0	0	0	0	0	0	0	3	200	0	203	0	0	199	4	203	406
01:15 PM	0	0	0	0	0	0	0	0	4	4	0	0	216	0	216	0	0	178	2	180	400
*** BREAK ***																					
Total	0	0	0	0	0	0	0	0	4	4	0	3	416	0	419	0	0	377	6	383	806
02:00 PM	0	0	0	0	0	0	0	0	4	4	0	1	254	0	255	1	0	223	0	224	483
02:15 PM	0	0	0	0	0	0	1	0	4	5	0	4	258	0	262	0	0	245	5	250	517
02:30 PM	0	0	0	0	0	0	0	0	4	4	0	13	317	0	330	0	0	243	7	250	584
02:45 PM	0	0	0	0	0	0	0	0	4	4	0	6	242	0	248	0	0	213	7	220	472
Total	0	0	0	0	0	0	1	0	16	17	0	24	1071	0	1095	1	0	924	19	944	2056

SW 56th Street & SW 69th Court

File Name : TMC-14 SW 56th Street & SW 69th Court
Site Code : 00000000
Start Date : 9/18/2018
Page No : 2

Groups Printed- Vehicle - Trucks

	SW 69th Court Southbound					SW 69th Court Northbound					SW 56th Street Westbound					SW 56th Street Eastbound					
Start Time	U-Turns	Left	Thru	Right	App. Total	U-Turns	Left	Thru	Right	App. Total	U-Turns	Left	Thru	Right	App. Total	U-Turns	Left	Thru	Right	App. Total	Int. Total
*** BREAK ***																					
04:00 PM	0	0	0	0	0	0	3	0	4	7	0	3	363	0	366	0	0	207	1	208	581
04:15 PM	0	0	0	0	0	0	0	0	4	4	0	3	407	0	410	0	0	199	0	199	613
04:30 PM	0	0	0	0	0	0	0	0	6	6	0	11	361	0	372	0	0	213	0	213	591
04:45 PM	0	0	0	0	0	0	1	0	4	5	0	5	362	0	367	0	0	214	2	216	588
Total	0	0	0	0	0	0	4	0	18	22	0	22	1493	0	1515	0	0	833	3	836	2373
05:00 PM	0	0	0	0	0	0	1	0	4	5	0	7	346	0	353	1	0	199	2	202	560
05:15 PM	0	0	0	0	0	0	0	0	2	2	0	14	318	0	332	0	0	179	3	182	516
05:30 PM	0	0	0	0	0	0	1	0	2	3	0	10	357	0	367	0	0	196	2	198	568
05:45 PM	0	0	0	0	0	0	0	0	3	3	0	10	351	0	361	0	0	212	2	214	578
Total	0	0	0	0	0	0	2	0	11	13	0	41	1372	0	1413	1	0	786	9	796	2222
06:00 PM	0	0	0	0	0	0	0	0	2	2	0	6	322	0	328	0	0	240	1	241	571
06:15 PM	0	0	0	0	0	0	3	0	3	6	0	3	319	0	322	0	0	195	1	196	524
06:30 PM	0	0	0	0	0	0	0	0	4	4	0	7	328	0	335	0	0	173	1	174	513
06:45 PM	0	0	0	0	0	0	0	0	2	2	0	6	343	0	349	0	0	188	0	188	539
Total	0	0	0	0	0	0	3	0	11	14	0	22	1312	0	1334	0	0	796	3	799	2147
Grand Total	0	0	0	0	0	0	23	0	171	194	0	164	8736	0	8900	2	0	9261	149	9412	18506
Apprch %	0	0	0	0		0	11.9	0	88.1		0	1.8	98.2	0		0	0	98.4	1.6		
Total %	0	0	0	0	0	0	0.1	0	0.9	1	0	0.9	47.2	0	48.1	0	0	50	0.8	50.9	
Vehicle	0	0	0	0	0	0	23	0	166	189	0	161	8522	0	8683	2	0	9063	145	9210	18082
% Vehicle	0	0	0	0	0	0	100	0	97.1	97.4	0	98.2	97.6	0	97.6	100	0	97.9	97.3	97.9	97.7
Trucks	0	0	0	0	0	0	0	0	5	5	0	3	214	0	217	0	0	198	4	202	424
% Trucks	0	0	0	0	0	0	0	0	2.9	2.6	0	1.8	2.4	0	2.4	0	0	2.1	2.7	2.1	2.3

SW 56th Street & SW 69th Court

File Name : TMC-14 SW 56th Street & SW 69th Court
Site Code : 00000000
Start Date : 9/18/2018
Page No : 3

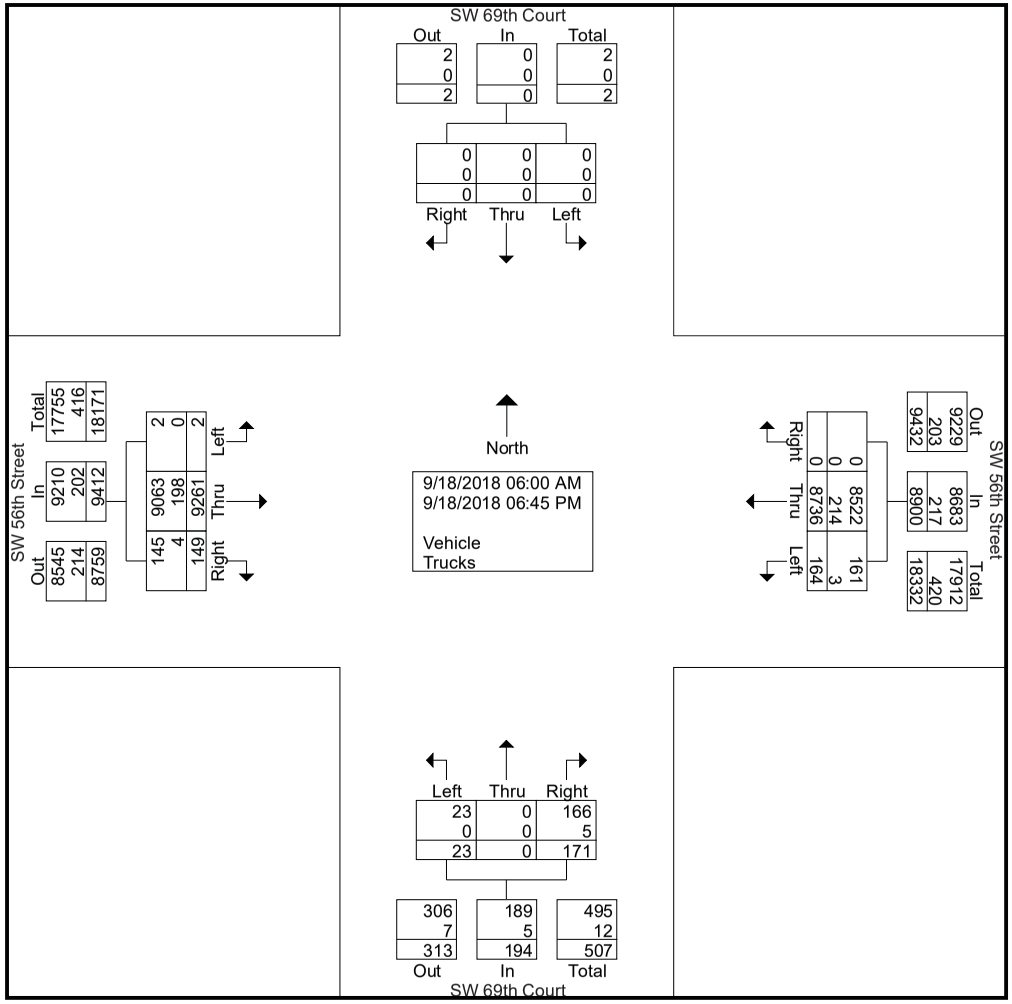

SW 56th Street & SW 69th Court

File Name : TMC-14 SW 56th Street & SW 69th Court
Site Code : 00000000
Start Date : 9/18/2018
Page No : 4

	SW 69th Court Southbound					SW 69th Court Northbound					SW 56th Street Westbound					SW 56th Street Eastbound					
Start Time	U-Turns	Left	Thru	Right	App. Total	U-Turns	Left	Thru	Right	App. Total	U-Turns	Left	Thru	Right	App. Total	U-Turns	Left	Thru	Right	App. Total	Int. Total
Peak Hour Analysis From 06:00 AM to 08:45 AM - Peak 1 of 1																					
Peak Hour for Entire Intersection Begins at 07:30 AM																					
07:30 AM	0	0	0	0	0	0	1	0	6	7	0	6	155	0	161	0	0	**423**	12	**435**	603
07:45 AM	0	0	0	0	0	0	1	0	8	9	0	1	147	0	148	0	0	347	**30**	377	534
08:00 AM	0	0	0	0	0	0	0	0	**14**	14	0	9	186	0	195	0	0	406	20	426	635
08:15 AM	0	0	0	0	0	0	**2**	0	13	**15**	0	**11**	**230**	0	**241**	0	0	404	12	416	**672**
Total Volume	0	0	0	0	0	0	4	0	41	45	0	27	718	0	745	0	0	1580	74	1654	2444
% App. Total	0	0	0	0		0	8.9	0	91.1		0	3.6	96.4	0		0	0	95.5	4.5		
PHF	.000	.000	.000	.000	.000	.000	.500	.000	.732	.750	.000	.614	.780	.000	.773	.000	.000	.934	.617	.951	.909

SW 56th Street & SW 69th Court

File Name : TMC-14 SW 56th Street & SW 69th Court
Site Code : 00000000
Start Date : 9/18/2018
Page No : 5

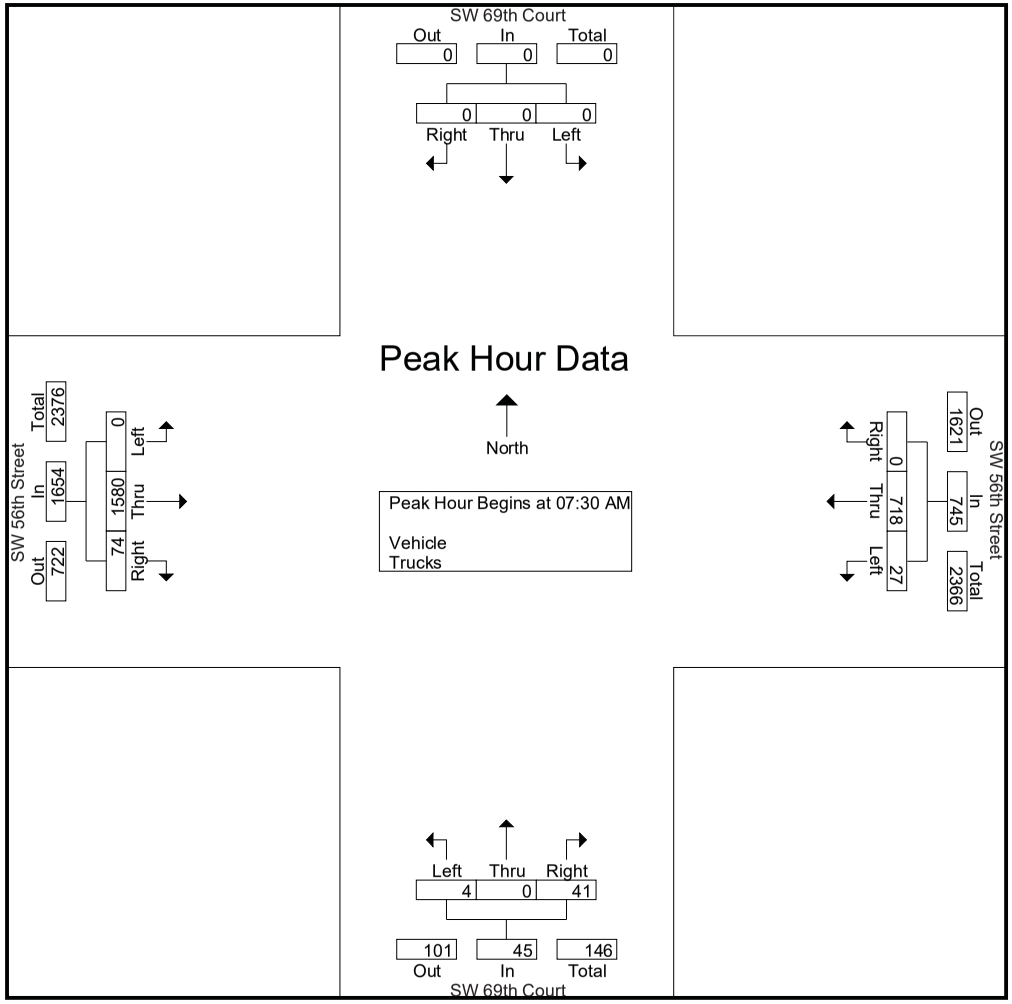

SW 56th Street & SW 69th Court

File Name : TMC-14 SW 56th Street & SW 69th Court
Site Code : 00000000
Start Date : 9/18/2018
Page No : 6

	SW 69th Court Southbound					SW 69th Court Northbound					SW 56th Street Westbound					SW 56th Street Eastbound					
Start Time	U-Turns	Left	Thru	Right	App. Total	U-Turns	Left	Thru	Right	App. Total	U-Turns	Left	Thru	Right	App. Total	U-Turns	Left	Thru	Right	App. Total	Int. Total
Peak Hour Analysis From 11:30 AM to 01:15 PM - Peak 1 of 1																					
Peak Hour for Entire Intersection Begins at 12:00 PM																					
12:00 PM	0	0	0	0	0	0	0	0	**6**	**6**	0	**2**	200	0	202	0	0	**230**	**2**	**232**	440
12:15 PM	0	0	0	0	0	0	0	0	0	0	0	1	167	0	168	0	0	224	0	224	392
12:30 PM	0	0	0	0	0	0	0	0	2	2	0	2	**247**	0	**249**	0	0	175	1	176	427
12:45 PM	0	0	0	0	0	0	**1**	0	4	5	0	2	231	0	233	0	0	210	2	212	**450**
Total Volume	0	0	0	0	0	0	1	0	12	13	0	7	845	0	852	0	0	839	5	844	1709
% App. Total	0	0	0	0		0	7.7	0	92.3		0	0.8	99.2	0		0	0	99.4	0.6		
PHF	.000	.000	.000	.000	.000	.000	.250	.000	.500	.542	.000	.875	.855	.000	.855	.000	.000	.912	.625	.909	.949

SW 56th Street & SW 69th Court

File Name : TMC-14 SW 56th Street & SW 69th Court
Site Code : 00000000
Start Date : 9/18/2018
Page No : 7

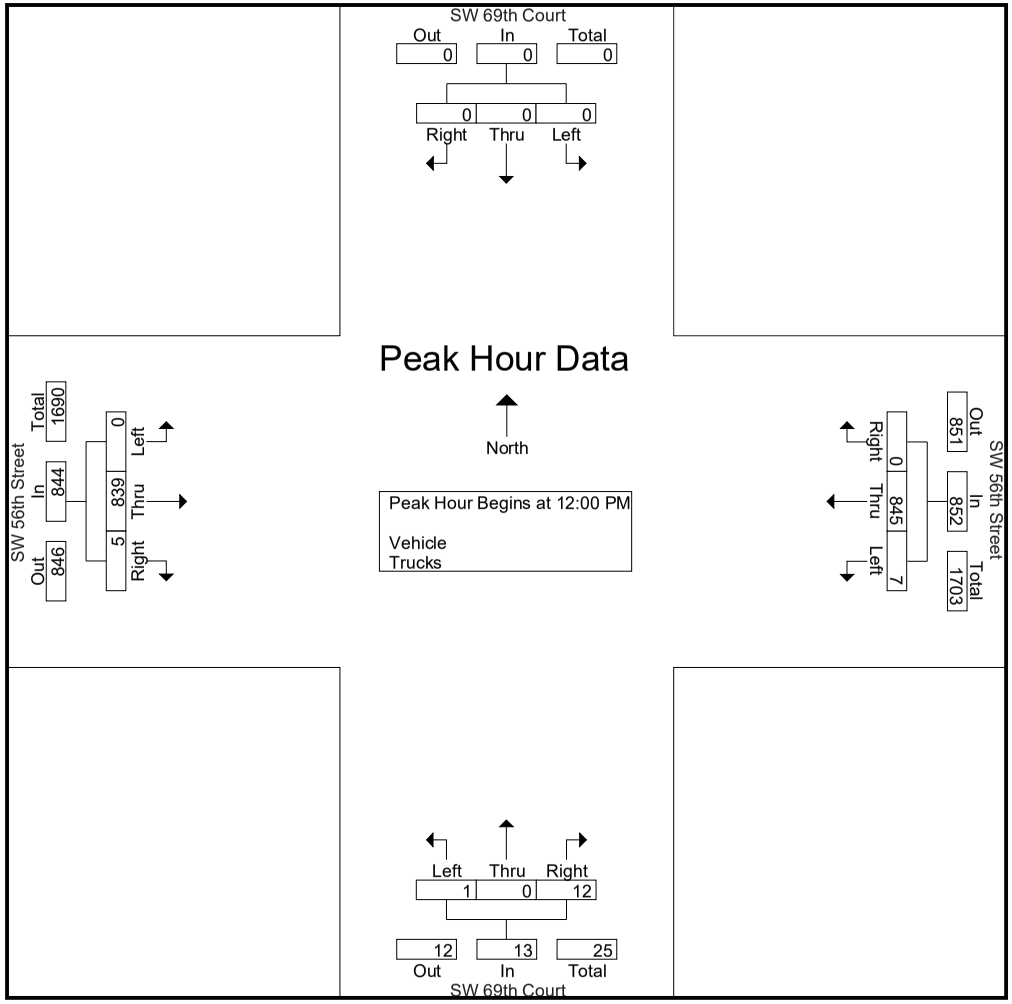

SW 56th Street & SW 69th Court

File Name : TMC-14 SW 56th Street & SW 69th Court
Site Code : 00000000
Start Date : 9/18/2018
Page No : 8

	SW 69th Court Southbound					SW 69th Court Northbound					SW 56th Street Westbound					SW 56th Street Eastbound					
Start Time	U-Turns	Left	Thru	Right	App. Total	U-Turns	Left	Thru	Right	App. Total	U-Turns	Left	Thru	Right	App. Total	U-Turns	Left	Thru	Right	App. Total	Int. Total
Peak Hour Analysis From 02:00 PM to 02:45 PM - Peak 1 of 1																					
Peak Hour for Entire Intersection Begins at 02:00 PM																					
02:00 PM	0	0	0	0	0	0	0	0	**4**	4	0	1	254	0	255	**1**	0	223	0	224	483
02:15 PM	0	0	0	0	0	0	**1**	0	4	**5**	0	4	258	0	262	0	0	**245**	5	**250**	517
02:30 PM	0	0	0	0	0	0	0	0	4	4	0	**13**	**317**	0	**330**	0	0	243	**7**	250	**584**
02:45 PM	0	0	0	0	0	0	0	0	4	4	0	6	242	0	248	0	0	213	7	220	472
Total Volume	0	0	0	0	0	0	1	0	16	17	0	24	1071	0	1095	1	0	924	19	944	2056
% App. Total	0	0	0	0		0	5.9	0	94.1		0	2.2	97.8	0		0.1	0	97.9	2		
PHF	.000	.000	.000	.000	.000	.000	.250	.000	1.00	.850	.000	.462	.845	.000	.830	.250	.000	.943	.679	.944	.880

SW 56th Street & SW 69th Court

File Name : TMC-14 SW 56th Street & SW 69th Court
Site Code : 00000000
Start Date : 9/18/2018
Page No : 9

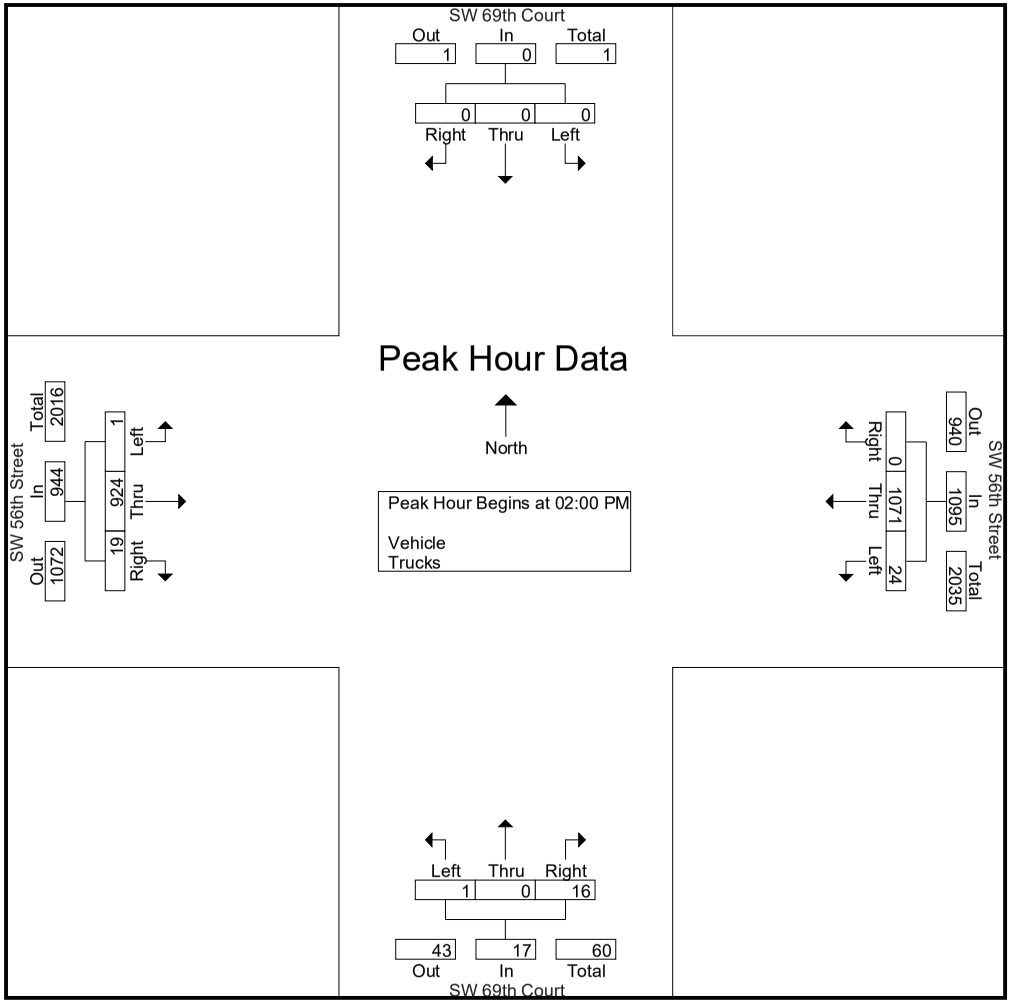

SW 56th Street & SW 69th Court

File Name : TMC-14 SW 56th Street & SW 69th Court
Site Code : 00000000
Start Date : 9/18/2018
Page No : 10

	SW 69th Court Southbound					SW 69th Court Northbound					SW 56th Street Westbound					SW 56th Street Eastbound					
Start Time	U-Turns	Left	Thru	Right	App. Total	U-Turns	Left	Thru	Right	App. Total	U-Turns	Left	Thru	Right	App. Total	U-Turns	Left	Thru	Right	App. Total	Int. Total
Peak Hour Analysis From 04:00 PM to 06:45 PM - Peak 1 of 1																					
Peak Hour for Entire Intersection Begins at 04:00 PM																					
04:00 PM	0	0	0	0	0	0	**3**	0	4	**7**	0	3	363	0	366	0	0	207	1	208	581
04:15 PM	0	0	0	0	0	0	0	0	4	4	0	3	**407**	0	**410**	0	0	199	0	199	**613**
04:30 PM	0	0	0	0	0	0	0	0	**6**	6	0	**11**	361	0	372	0	0	213	0	213	591
04:45 PM	0	0	0	0	0	0	1	0	4	5	0	5	362	0	367	0	0	**214**	**2**	**216**	588
Total Volume	0	0	0	0	0	0	4	0	18	22	0	22	1493	0	1515	0	0	833	3	836	2373
% App. Total	0	0	0	0		0	18.2	0	81.8		0	1.5	98.5	0		0	0	99.6	0.4		
PHF	.000	.000	.000	.000	.000	.000	.333	.000	.750	.786	.000	.500	.917	.000	.924	.000	.000	.973	.375	.968	.968

SW 56th Street & SW 69th Court

File Name : TMC-14 SW 56th Street & SW 69th Court
Site Code : 00000000
Start Date : 9/18/2018
Page No : 11

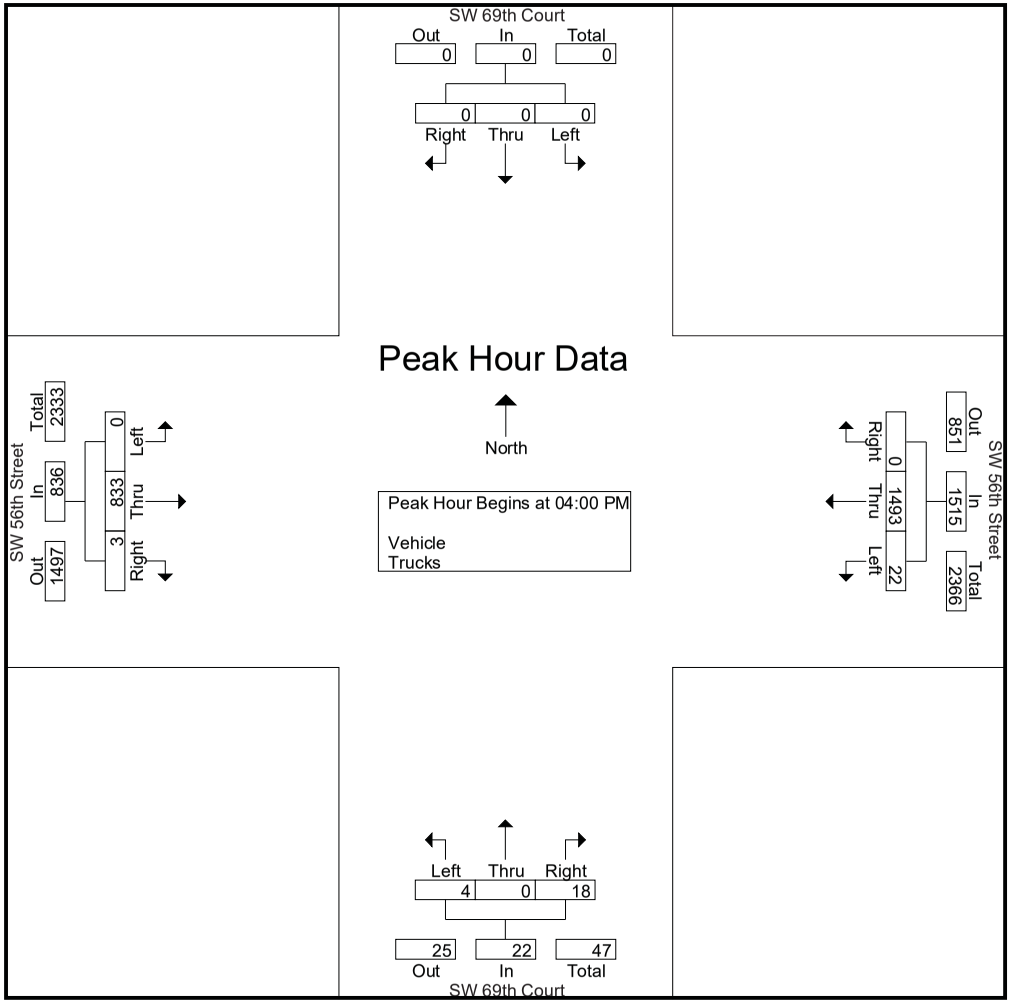

SW 72nd Street & SW 69th Avenue

File Name : TMC-15 SW 72nd Street & SW 69th Avenue
Site Code : 00000000
Start Date : 9/18/2018
Page No : 1

Groups Printed- Vehicle - Trucks

	SW 69th Avenue Southbound					SW 69th Avenue Northbound					SW 72nd Street Westbound					SW 72nd Street Eastbound					
Start Time	U-Turns	Left	Thru	Right	App. Total	U-Turns	Left	Thru	Right	App. Total	U-Turns	Left	Thru	Right	App. Total	U-Turns	Left	Thru	Right	App. Total	Int. Total
06:00 AM	0	0	0	2	2	0	0	0	0	0	0	0	53	0	53	0	0	221	0	221	276
06:15 AM	0	0	0	0	0	0	0	0	0	0	0	0	61	0	61	0	2	327	0	329	390
06:30 AM	0	0	0	2	2	0	0	0	0	0	0	0	77	0	77	0	3	381	0	384	463
06:45 AM	0	1	0	3	4	0	0	0	0	0	0	0	95	0	95	0	1	456	0	457	556
Total	0	1	0	7	8	0	0	0	0	0	0	0	286	0	286	0	6	1385	0	1391	1685
07:00 AM	0	1	0	6	7	0	0	0	0	0	0	0	139	1	140	0	1	447	0	448	595
07:15 AM	0	1	0	3	4	0	0	0	0	0	0	0	179	2	181	0	5	402	0	407	592
07:30 AM	0	0	0	1	1	0	0	0	0	0	0	0	170	2	172	0	2	388	0	390	563
07:45 AM	0	0	0	5	5	0	0	0	0	0	0	0	153	2	155	0	2	330	0	332	492
Total	0	2	0	15	17	0	0	0	0	0	0	0	641	7	648	0	10	1567	0	1577	2242
08:00 AM	0	1	0	9	10	0	0	0	0	0	0	0	170	2	172	0	1	308	0	309	491
08:15 AM	0	1	0	4	5	0	0	0	0	0	0	0	167	2	169	0	3	343	0	346	520
08:30 AM	0	0	0	8	8	0	0	0	0	0	0	0	193	3	196	0	3	349	0	352	556
08:45 AM	0	3	0	3	6	0	0	0	0	0	0	0	173	1	174	0	8	431	0	439	619
Total	0	5	0	24	29	0	0	0	0	0	0	0	703	8	711	0	15	1431	0	1446	2186
*** BREAK ***																					
11:30 AM	0	1	0	2	3	0	0	0	0	0	0	0	273	2	275	0	1	212	0	213	491
11:45 AM	0	0	0	4	4	0	0	0	0	0	0	0	240	2	242	0	0	241	0	241	487
Total	0	1	0	6	7	0	0	0	0	0	0	0	513	4	517	0	1	453	0	454	978
12:00 PM	0	2	0	4	6	0	0	0	0	0	0	0	298	0	298	0	1	205	0	206	510
12:15 PM	0	0	0	0	0	0	0	0	0	0	0	0	274	2	276	0	6	266	0	272	548
12:30 PM	0	1	0	3	4	0	0	0	0	0	0	0	247	0	247	0	2	258	0	260	511
12:45 PM	0	0	0	2	2	0	0	0	0	0	0	0	259	1	260	0	2	244	0	246	508
Total	0	3	0	9	12	0	0	0	0	0	0	0	1078	3	1081	0	11	973	0	984	2077
01:00 PM	0	0	0	5	5	0	0	0	0	0	0	0	258	4	262	0	2	235	0	237	504
01:15 PM	0	1	0	4	5	0	0	0	0	0	0	0	248	5	253	0	0	277	0	277	535
*** BREAK ***																					
Total	0	1	0	9	10	0	0	0	0	0	0	0	506	9	515	0	2	512	0	514	1039

*** BREAK ***

SW 72nd Street & SW 69th Avenue

File Name : TMC-15 SW 72nd Street & SW 69th Avenue
Site Code : 00000000
Start Date : 9/18/2018
Page No : 2

Groups Printed- Vehicle - Trucks

	SW 69th Avenue Southbound					SW 69th Avenue Northbound					SW 72nd Street Westbound					SW 72nd Street Eastbound					
Start Time	U-Turns	Left	Thru	Right	App. Total	U-Turns	Left	Thru	Right	App. Total	U-Turns	Left	Thru	Right	App. Total	U-Turns	Left	Thru	Right	App. Total	Int. Total
04:00 PM	0	1	0	11	12	0	0	0	0	0	0	0	409	1	410	0	1	241	0	242	664
04:15 PM	0	1	0	15	16	0	0	0	0	0	0	0	405	2	407	0	5	218	0	223	646
04:30 PM	0	1	0	14	15	0	0	0	0	0	0	0	440	1	441	0	6	198	0	204	660
04:45 PM	0	0	0	12	12	0	0	0	0	0	0	0	431	0	431	0	3	190	0	193	636
Total	0	3	0	52	55	0	0	0	0	0	0	0	1685	4	1689	0	15	847	0	862	2606
05:00 PM	0	0	0	10	10	0	0	0	0	0	0	0	436	1	437	0	1	195	0	196	643
05:15 PM	0	4	0	13	17	0	0	0	0	0	0	0	435	2	437	0	2	186	0	188	642
05:30 PM	0	1	0	16	17	0	0	0	0	0	0	0	427	3	430	0	2	207	0	209	656
05:45 PM	0	0	0	16	16	0	0	0	0	0	0	0	409	0	409	0	1	209	0	210	635
Total	0	5	0	55	60	0	0	0	0	0	0	0	1707	6	1713	0	6	797	0	803	2576
06:00 PM	0	3	0	13	16	0	0	0	0	0	1	0	394	1	396	0	2	199	0	201	613
06:15 PM	0	0	0	17	17	0	0	0	0	0	0	0	328	1	329	0	0	218	0	218	564
06:30 PM	0	2	0	12	14	0	0	0	0	0	0	0	389	1	390	0	4	214	0	218	622
06:45 PM	0	0	0	11	11	0	0	0	0	0	0	0	308	2	310	0	4	195	0	199	520
Total	0	5	0	53	58	0	0	0	0	0	1	0	1419	5	1425	0	10	826	0	836	2319
Grand Total	0	26	0	230	256	0	0	0	0	0	1	0	8538	46	8585	0	76	8791	0	8867	17708
Apprch %	0	10.2	0	89.8		0	0	0	0		0	0	99.5	0.5		0	0.9	99.1	0		
Total %	0	0.1	0	1.3	1.4	0	0	0	0	0	0	0	48.2	0.3	48.5	0	0.4	49.6	0	50.1	
Vehicle	0	25	0	229	254	0	0	0	0	0	1	0	8466	44	8511	0	73	8719	0	8792	17557
% Vehicle	0	96.2	0	99.6	99.2	0	0	0	0	0	100	0	99.2	95.7	99.1	0	96.1	99.2	0	99.2	99.1
Trucks	0	1	0	1	2	0	0	0	0	0	0	0	72	2	74	0	3	72	0	75	151
% Trucks	0	3.8	0	0.4	0.8	0	0	0	0	0	0	0	0.8	4.3	0.9	0	3.9	0.8	0	0.8	0.9

SW 72nd Street & SW 69th Avenue

File Name : TMC-15 SW 72nd Street & SW 69th Avenue
Site Code : 00000000
Start Date : 9/18/2018
Page No : 3

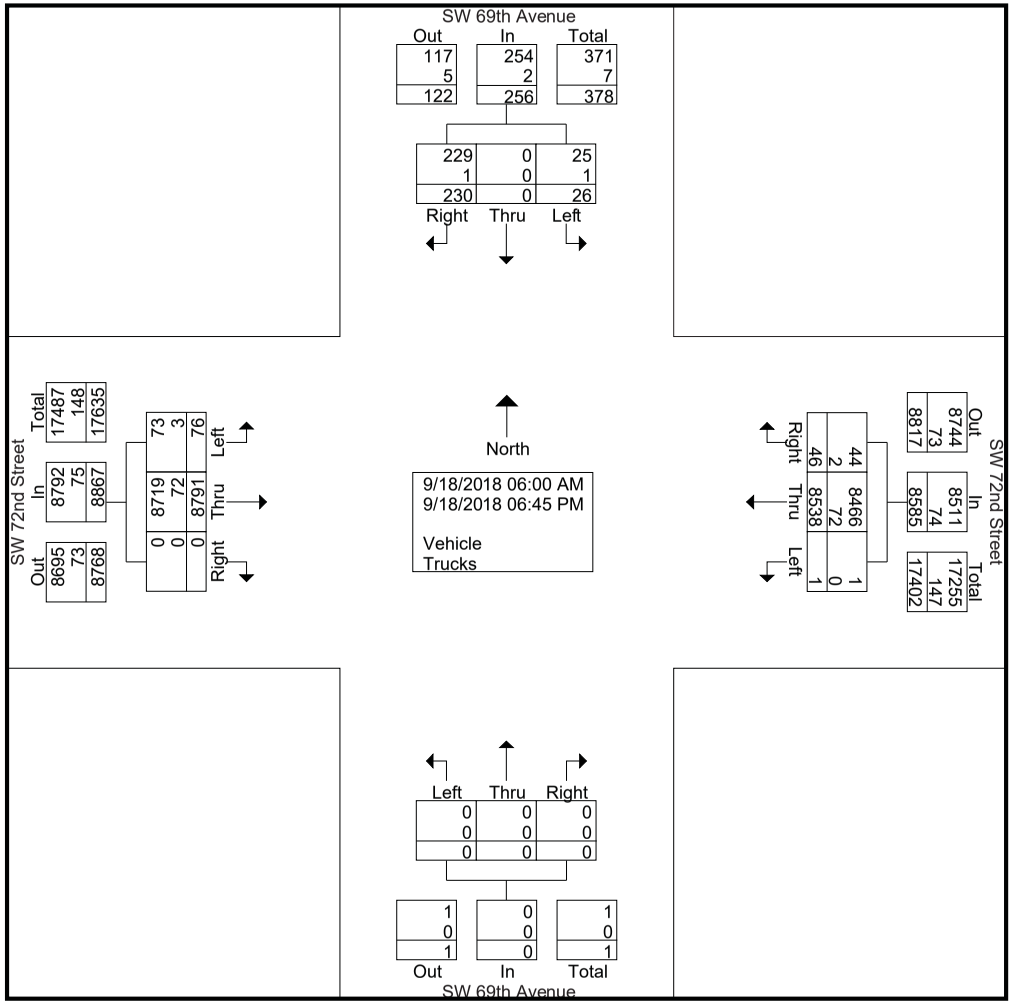

SW 72nd Street & SW 69th Avenue

File Name : TMC-15 SW 72nd Street & SW 69th Avenue
Site Code : 00000000
Start Date : 9/18/2018
Page No : 4

	SW 69th Avenue Southbound					SW 69th Avenue Northbound					SW 72nd Street Westbound					SW 72nd Street Eastbound					
Start Time	U-Turns	Left	Thru	Right	App. Total	U-Turns	Left	Thru	Right	App. Total	U-Turns	Left	Thru	Right	App. Total	U-Turns	Left	Thru	Right	App. Total	Int. Total
Peak Hour Analysis From 06:00 AM to 08:45 AM - Peak 1 of 1																					
Peak Hour for Entire Intersection Begins at 06:45 AM																					
06:45 AM	0	**1**	0	3	4	0	0	0	0	0	0	0	95	0	95	0	1	**456**	0	**457**	556
07:00 AM	0	1	0	**6**	**7**	0	0	0	0	0	0	0	139	1	140	0	1	447	0	448	**595**
07:15 AM	0	1	0	3	4	0	0	0	0	0	0	0	**179**	**2**	**181**	0	**5**	402	0	407	592
07:30 AM	0	0	0	1	1	0	0	0	0	0	0	0	170	2	172	0	2	388	0	390	563
Total Volume	0	3	0	13	16	0	0	0	0	0	0	0	583	5	588	0	9	1693	0	1702	2306
% App. Total	0	18.8	0	81.2		0	0	0	0		0	0	99.1	0.9		0	0.5	99.5	0		
PHF	.000	.750	.000	.542	.571	.000	.000	.000	.000	.000	.000	.000	.814	.625	.812	.000	.450	.928	.000	.931	.969

SW 72nd Street & SW 69th Avenue

File Name : TMC-15 SW 72nd Street & SW 69th Avenue
Site Code : 00000000
Start Date : 9/18/2018
Page No : 5

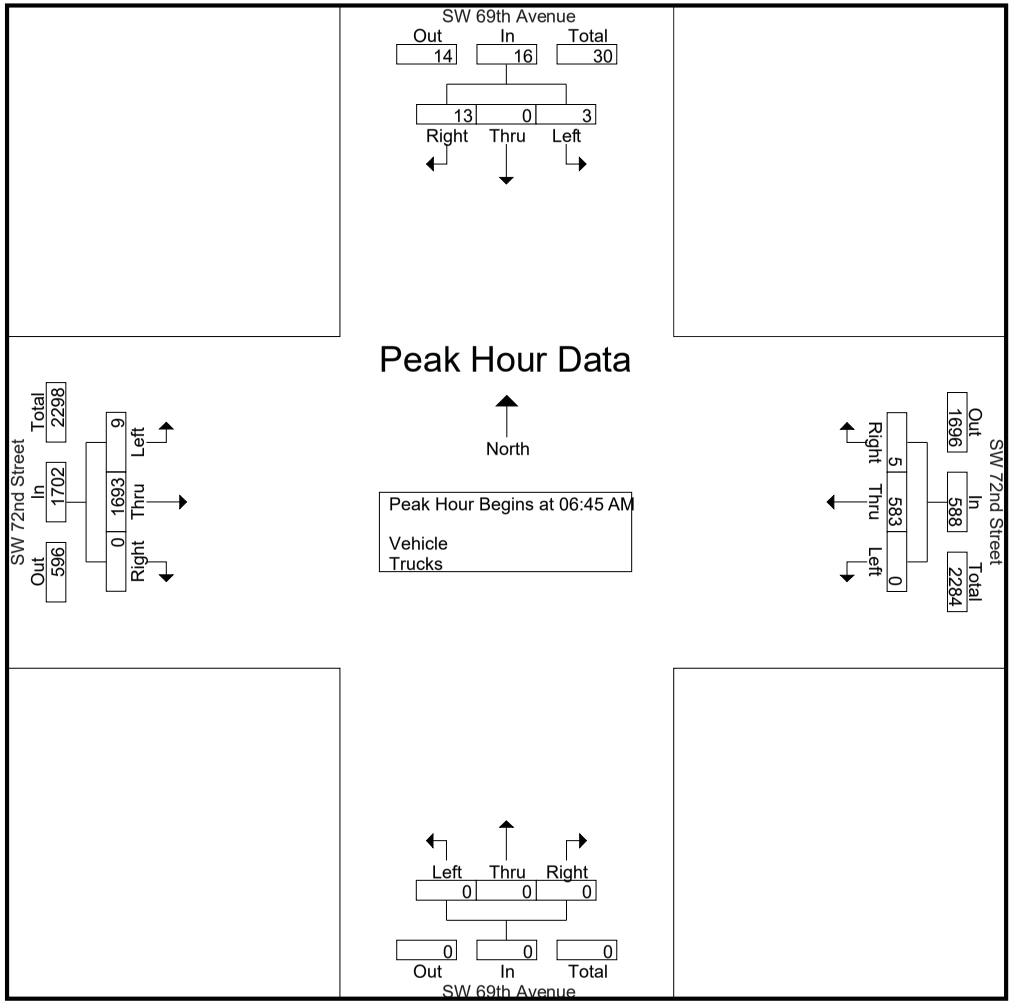

SW 72nd Street & SW 69th Avenue

File Name : TMC-15 SW 72nd Street & SW 69th Avenue
Site Code : 00000000
Start Date : 9/18/2018
Page No : 6

	SW 69th Avenue Southbound					SW 69th Avenue Northbound					SW 72nd Street Westbound					SW 72nd Street Eastbound					
Start Time	U-Turns	Left	Thru	Right	App. Total	U-Turns	Left	Thru	Right	App. Total	U-Turns	Left	Thru	Right	App. Total	U-Turns	Left	Thru	Right	App. Total	Int. Total
Peak Hour Analysis From 11:30 AM to 01:15 PM - Peak 1 of 1																					
Peak Hour for Entire Intersection Begins at 12:00 PM																					
12:00 PM	0	**2**	0	**4**	**6**	0	0	0	0	0	0	0	**298**	0	**298**	0	1	205	0	206	510
12:15 PM	0	0	0	0	0	0	0	0	0	0	0	0	274	**2**	276	0	**6**	**266**	0	**272**	**548**
12:30 PM	0	1	0	3	4	0	0	0	0	0	0	0	247	0	247	0	2	258	0	260	511
12:45 PM	0	0	0	2	2	0	0	0	0	0	0	0	259	1	260	0	2	244	0	246	508
Total Volume	0	3	0	9	12	0	0	0	0	0	0	0	1078	3	1081	0	11	973	0	984	2077
% App. Total	0	25	0	75		0	0	0	0		0	0	99.7	0.3		0	1.1	98.9	0		
PHF	.000	.375	.000	.563	.500	.000	.000	.000	.000	.000	.000	.000	.904	.375	.907	.000	.458	.914	.000	.904	.948

SW 72nd Street & SW 69th Avenue

File Name : TMC-15 SW 72nd Street & SW 69th Avenue
Site Code : 00000000
Start Date : 9/18/2018
Page No : 7

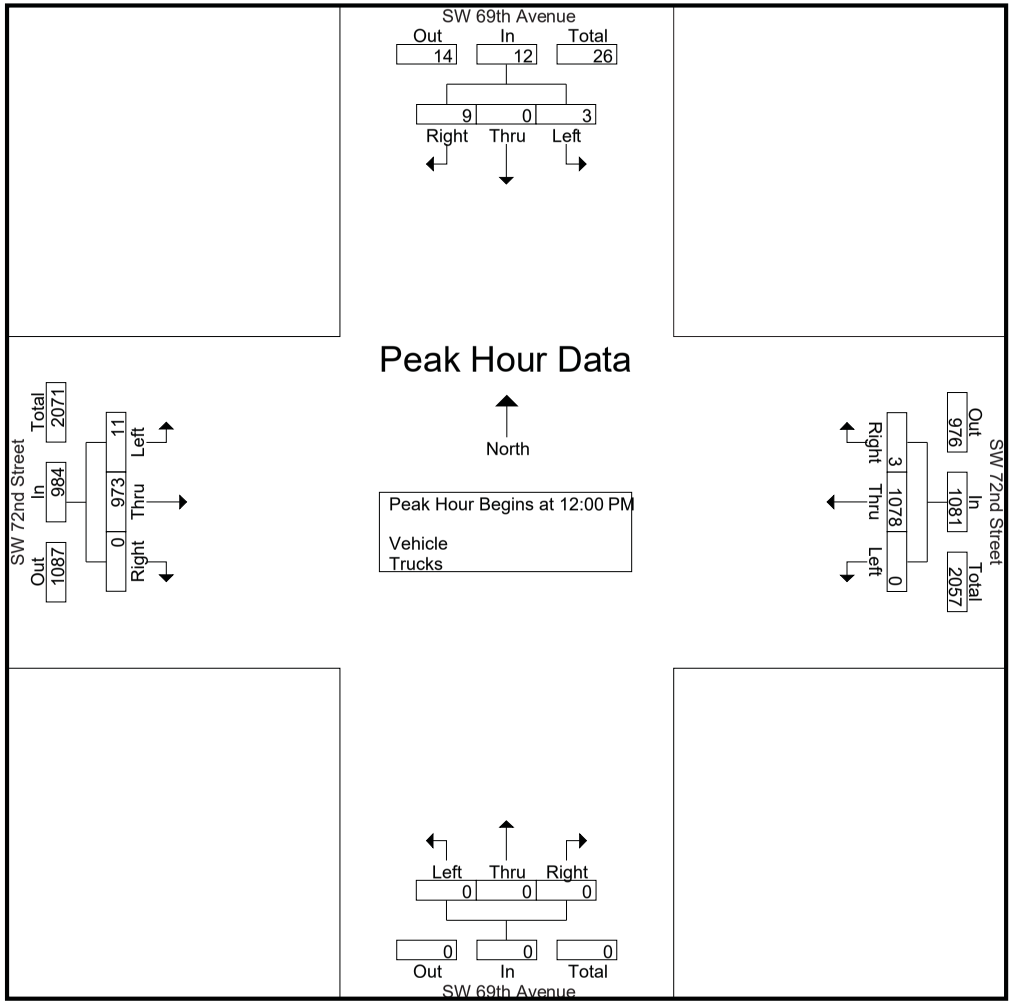

SW 72nd Street & SW 69th Avenue

File Name : TMC-15 SW 72nd Street & SW 69th Avenue
Site Code : 00000000
Start Date : 9/18/2018
Page No : 8

	SW 69th Avenue Southbound					SW 69th Avenue Northbound					SW 72nd Street Westbound					SW 72nd Street Eastbound					
Start Time	U-Turns	Left	Thru	Right	App. Total	U-Turns	Left	Thru	Right	App. Total	U-Turns	Left	Thru	Right	App. Total	U-Turns	Left	Thru	Right	App. Total	Int. Total
Peak Hour Analysis From 04:00 PM to 06:45 PM - Peak 1 of 1																					
Peak Hour for Entire Intersection Begins at 04:00 PM																					
04:00 PM	0	**1**	0	11	12	0	0	0	0	0	0	0	409	1	410	0	1	**241**	0	**242**	**664**
04:15 PM	0	1	0	**15**	**16**	0	0	0	0	0	0	0	405	**2**	407	0	5	218	0	223	646
04:30 PM	0	1	0	14	15	0	0	0	0	0	0	0	**440**	1	**441**	0	**6**	198	0	204	660
04:45 PM	0	0	0	12	12	0	0	0	0	0	0	0	431	0	431	0	3	190	0	193	636
Total Volume	0	3	0	52	55	0	0	0	0	0	0	0	1685	4	1689	0	15	847	0	862	2606
% App. Total	0	5.5	0	94.5		0	0	0	0		0	0	99.8	0.2		0	1.7	98.3	0		
PHF	.000	.750	.000	.867	.859	.000	.000	.000	.000	.000	.000	.000	.957	.500	.957	.000	.625	.879	.000	.890	.981

SW 72nd Street & SW 69th Avenue

File Name : TMC-15 SW 72nd Street & SW 69th Avenue
Site Code : 00000000
Start Date : 9/18/2018
Page No : 9

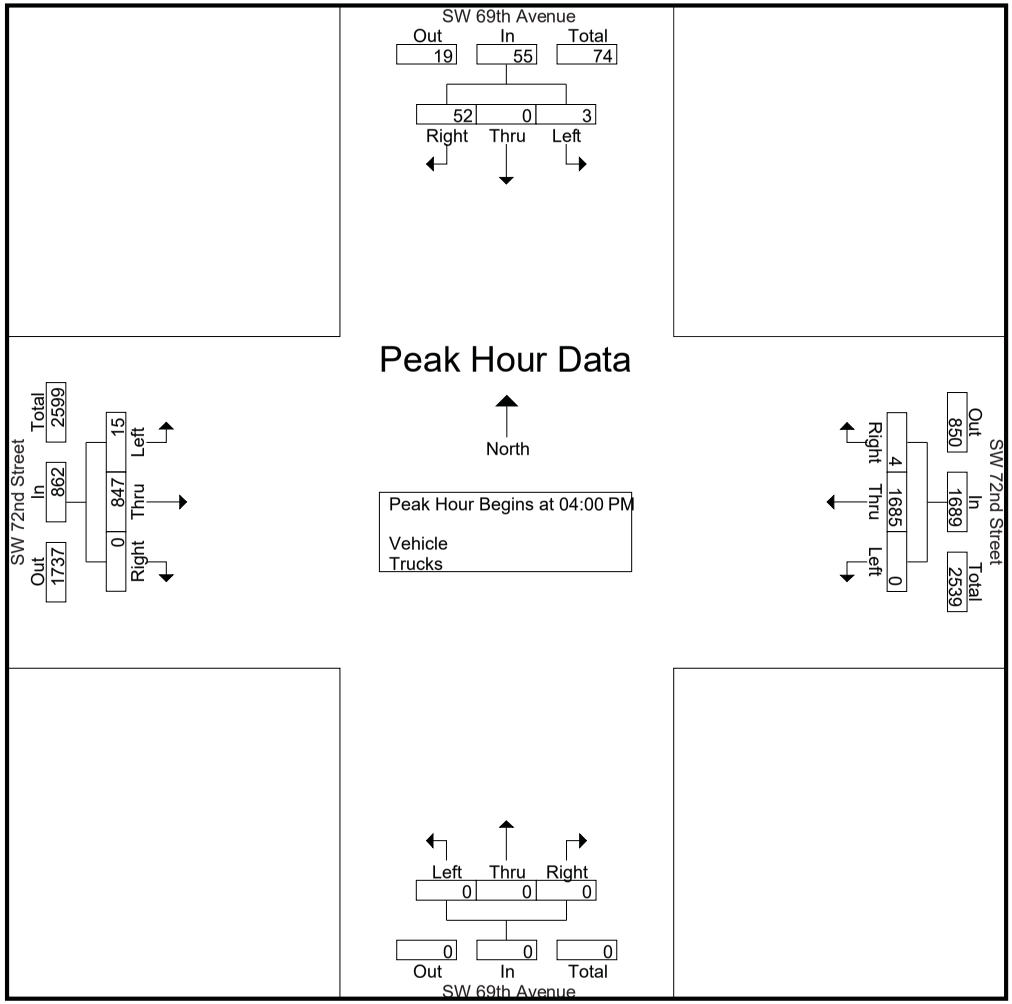

SW 80th Street & SW 70th Avenue

File Name : TMC-16 SW 80th Street & SW 70th Avenue
Site Code : 00000000
Start Date : 9/18/2018
Page No : 1

Groups Printed- Vehicle - Trucks

	SW 70th Avenue Southbound					SW 70th Avenue Northbound					SW 80th Street Westbound					SW 80th Street Eastbound					
Start Time	U-Turns	Left	Thru	Right	App. Total	U-Turns	Left	Thru	Right	App. Total	U-Turns	Left	Thru	Right	App. Total	U-Turns	Left	Thru	Right	App. Total	Int. Total
06:00 AM	0	0	0	0	0	0	14	0	10	24	0	6	9	0	15	0	0	37	8	45	84
06:15 AM	0	0	0	0	0	1	26	0	21	48	0	11	7	0	18	0	0	55	15	70	136
06:30 AM	0	0	0	0	0	0	25	0	24	49	0	5	23	0	28	0	0	76	7	83	160
06:45 AM	0	0	0	0	0	0	15	0	30	45	0	12	33	0	45	0	0	123	13	136	226
Total	0	0	0	0	0	1	80	0	85	166	0	34	72	0	106	0	0	291	43	334	606
07:00 AM	0	0	0	0	0	0	21	0	51	72	0	7	32	0	39	0	0	122	9	131	242
07:15 AM	0	0	0	0	0	0	18	0	63	81	0	8	27	0	35	0	0	132	6	138	254
07:30 AM	0	0	0	0	0	0	17	0	82	99	0	13	31	0	44	0	0	149	6	155	298
07:45 AM	0	0	0	0	0	0	25	0	117	142	0	13	34	0	47	0	0	143	4	147	336
Total	0	0	0	0	0	0	81	0	313	394	0	41	124	0	165	0	0	546	25	571	1130
08:00 AM	0	0	0	0	0	0	16	0	117	133	0	6	43	0	49	0	0	122	4	126	308
08:15 AM	0	0	0	0	0	0	29	0	91	120	0	13	63	0	76	0	0	127	3	130	326
08:30 AM	0	0	0	0	0	0	19	0	97	116	0	12	42	0	54	0	0	148	4	152	322
08:45 AM	0	0	0	0	0	0	21	0	97	118	0	14	36	0	50	0	0	153	11	164	332
Total	0	0	0	0	0	0	85	0	402	487	0	45	184	0	229	0	0	550	22	572	1288
*** BREAK ***																					
11:30 AM	0	0	0	0	0	0	16	0	51	67	0	20	39	0	59	0	0	33	5	38	164
11:45 AM	0	0	0	0	0	1	12	0	46	59	0	24	41	0	65	0	0	45	11	56	180
Total	0	0	0	0	0	1	28	0	97	126	0	44	80	0	124	0	0	78	16	94	344
12:00 PM	0	0	0	0	0	1	31	0	37	69	0	29	48	0	77	0	0	56	9	65	211
12:15 PM	0	0	0	0	0	0	23	0	42	65	0	20	45	0	65	0	0	49	14	63	193
12:30 PM	0	0	0	0	0	1	42	0	61	104	0	14	44	0	58	0	0	41	11	52	214
12:45 PM	0	0	0	0	0	0	40	0	39	79	0	29	54	0	83	0	0	55	8	63	225
Total	0	0	0	0	0	2	136	0	179	317	0	92	191	0	283	0	0	201	42	243	843
01:00 PM	0	0	0	0	0	0	31	0	56	87	0	30	56	0	86	0	0	40	13	53	226
01:15 PM	0	0	0	0	0	0	37	0	58	95	0	25	47	0	72	0	0	45	6	51	218
*** BREAK ***																					
Total	0	0	0	0	0	0	68	0	114	182	0	55	103	0	158	0	0	85	19	104	444

*** BREAK ***

SW 80th Street & SW 70th Avenue

File Name : TMC-16 SW 80th Street & SW 70th Avenue
Site Code : 00000000
Start Date : 9/18/2018
Page No : 2

Groups Printed- Vehicle - Trucks

	SW 70th Avenue Southbound					SW 70th Avenue Northbound					SW 80th Street Westbound					SW 80th Street Eastbound					
Start Time	U-Turns	Left	Thru	Right	App. Total	U-Turns	Left	Thru	Right	App. Total	U-Turns	Left	Thru	Right	App. Total	U-Turns	Left	Thru	Right	App. Total	Int. Total
04:00 PM	0	0	0	0	0	0	68	0	55	123	0	30	80	0	110	0	0	46	22	68	301
04:15 PM	0	0	0	0	0	0	61	0	45	106	0	38	85	0	123	0	0	55	17	72	301
04:30 PM	0	0	0	0	0	0	73	0	41	114	0	43	111	0	154	0	0	69	15	84	352
04:45 PM	0	0	0	0	0	0	80	0	43	123	0	43	96	0	139	0	0	49	18	67	329
Total	0	0	0	0	0	0	282	0	184	466	0	154	372	0	526	0	0	219	72	291	1283
05:00 PM	0	0	0	0	0	0	45	0	38	83	0	63	115	0	178	0	0	57	20	77	338
05:15 PM	0	0	0	0	0	1	68	0	42	111	0	62	107	0	169	0	0	49	19	68	348
05:30 PM	0	0	0	0	0	1	74	0	35	110	0	69	126	0	195	0	0	43	20	63	368
05:45 PM	0	0	0	0	0	1	76	0	55	132	0	55	108	0	163	0	0	76	26	102	397
Total	0	0	0	0	0	3	263	0	170	436	0	249	456	0	705	0	0	225	85	310	1451
06:00 PM	0	0	0	0	0	1	45	0	47	93	0	67	91	0	158	0	0	55	17	72	323
06:15 PM	0	0	0	0	0	0	62	0	50	112	0	54	100	0	154	0	0	63	15	78	344
06:30 PM	0	0	0	0	0	2	68	0	47	117	0	56	73	0	129	0	0	52	12	64	310
06:45 PM	0	0	0	0	0	3	54	0	29	86	0	29	78	0	107	0	0	38	10	48	241
Total	0	0	0	0	0	6	229	0	173	408	0	206	342	0	548	0	0	208	54	262	1218
Grand Total	0	0	0	0	0	13	1252	0	1717	2982	0	920	1924	0	2844	0	0	2403	378	2781	8607
Apprch %	0	0	0	0		0.4	42	0	57.6		0	32.3	67.7	0		0	0	86.4	13.6		
Total %	0	0	0	0	0	0.2	14.5	0	19.9	34.6	0	10.7	22.4	0	33	0	0	27.9	4.4	32.3	
Vehicle	0	0	0	0	0	13	1175	0	1709	2897	0	914	1898	0	2812	0	0	2371	351	2722	8431
% Vehicle	0	0	0	0	0	100	93.8	0	99.5	97.1	0	99.3	98.6	0	98.9	0	0	98.7	92.9	97.9	98
Trucks	0	0	0	0	0	0	77	0	8	85	0	6	26	0	32	0	0	32	27	59	176
% Trucks	0	0	0	0	0	0	6.2	0	0.5	2.9	0	0.7	1.4	0	1.1	0	0	1.3	7.1	2.1	2

SW 80th Street & SW 70th Avenue

File Name : TMC-16 SW 80th Street & SW 70th Avenue
Site Code : 00000000
Start Date : 9/18/2018
Page No : 3

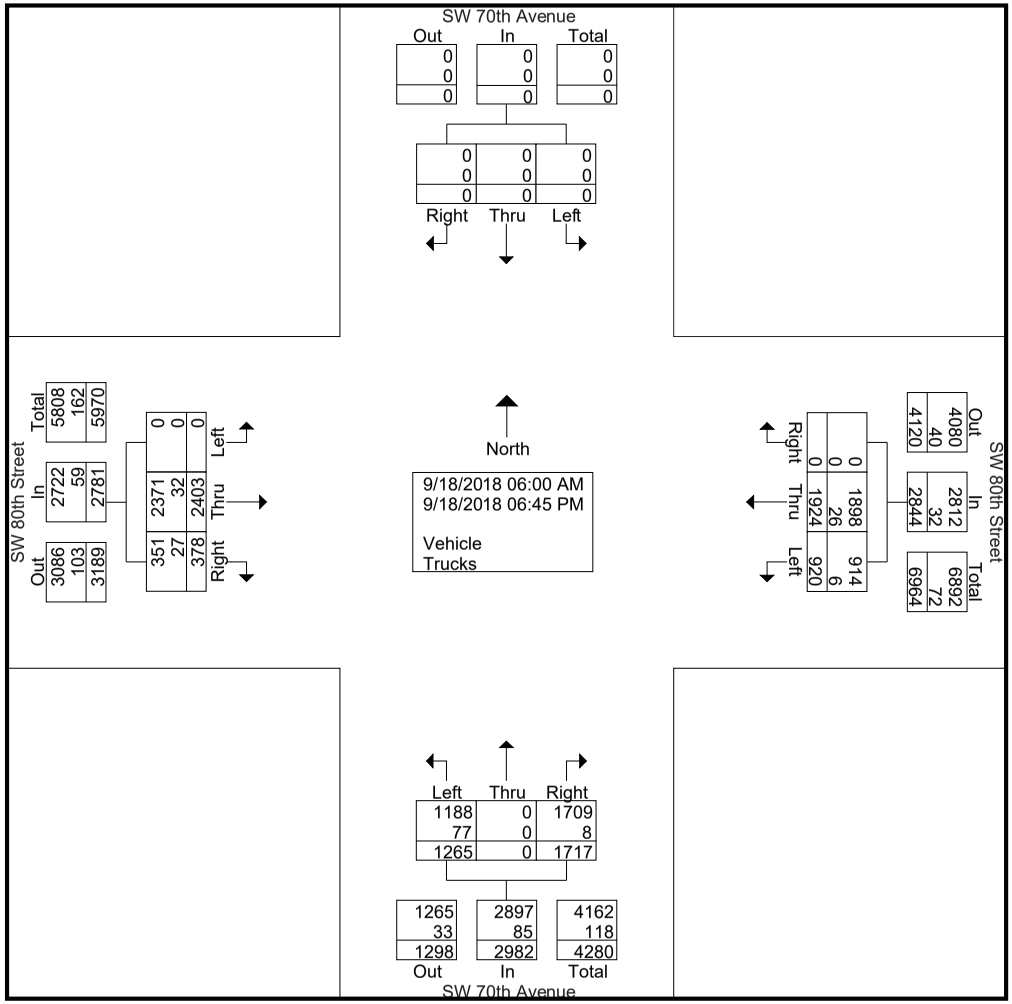

SW 80th Street & SW 70th Avenue

File Name : TMC-16 SW 80th Street & SW 70th Avenue
Site Code : 00000000
Start Date : 9/18/2018
Page No : 4

	SW 70th Avenue Southbound					SW 70th Avenue Northbound					SW 80th Street Westbound					SW 80th Street Eastbound					
Start Time	U-Turns	Left	Thru	Right	App. Total	U-Turns	Left	Thru	Right	App. Total	U-Turns	Left	Thru	Right	App. Total	U-Turns	Left	Thru	Right	App. Total	Int. Total
Peak Hour Analysis From 06:00 AM to 08:45 AM - Peak 1 of 1																					
Peak Hour for Entire Intersection Begins at 07:45 AM																					
07:45 AM	0	0	0	0	0	0	25	0	**117**	**142**	0	**13**	34	0	47	0	0	143	**4**	147	**336**
08:00 AM	0	0	0	0	0	0	16	0	117	133	0	6	43	0	49	0	0	122	4	126	308
08:15 AM	0	0	0	0	0	0	**29**	0	91	120	0	13	**63**	0	**76**	0	0	127	3	130	326
08:30 AM	0	0	0	0	0	0	19	0	97	116	0	12	42	0	54	0	0	**148**	4	**152**	322
Total Volume	0	0	0	0	0	0	89	0	422	511	0	44	182	0	226	0	0	540	15	555	1292
% App. Total	0	0	0	0		0	17.4	0	82.6		0	19.5	80.5	0		0	0	97.3	2.7		
PHF	.000	.000	.000	.000	.000	.000	.767	.000	.902	.900	.000	.846	.722	.000	.743	.000	.000	.912	.938	.913	.961

SW 80th Street & SW 70th Avenue

File Name : TMC-16 SW 80th Street & SW 70th Avenue
Site Code : 00000000
Start Date : 9/18/2018
Page No : 5

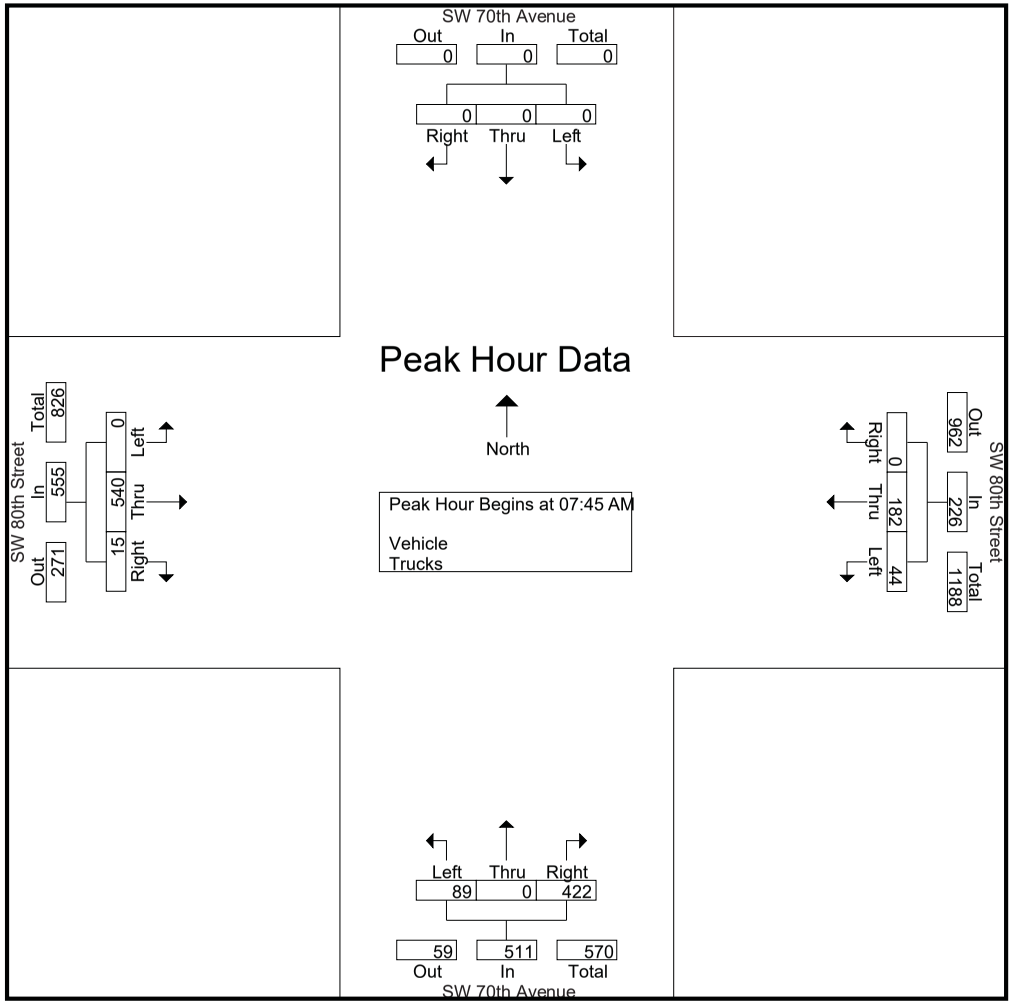

SW 80th Street & SW 70th Avenue

File Name : TMC-16 SW 80th Street & SW 70th Avenue
Site Code : 00000000
Start Date : 9/18/2018
Page No : 6

	SW 70th Avenue Southbound					SW 70th Avenue Northbound					SW 80th Street Westbound					SW 80th Street Eastbound					
Start Time	U-Turns	Left	Thru	Right	App. Total	U-Turns	Left	Thru	Right	App. Total	U-Turns	Left	Thru	Right	App. Total	U-Turns	Left	Thru	Right	App. Total	Int. Total
Peak Hour Analysis From 11:30 AM to 01:15 PM - Peak 1 of 1																					
Peak Hour for Entire Intersection Begins at 12:30 PM																					
12:30 PM	0	0	0	0	0	**1**	**42**	0	**61**	**104**	0	14	44	0	58	0	0	41	11	52	214
12:45 PM	0	0	0	0	0	0	40	0	39	79	0	29	54	0	83	0	0	**55**	8	**63**	225
01:00 PM	0	0	0	0	0	0	31	0	56	87	0	**30**	**56**	0	**86**	0	0	40	**13**	53	**226**
01:15 PM	0	0	0	0	0	0	37	0	58	95	0	25	47	0	72	0	0	45	6	51	218
Total Volume	0	0	0	0	0	1	150	0	214	365	0	98	201	0	299	0	0	181	38	219	883
% App. Total	0	0	0	0		0.3	41.1	0	58.6		0	32.8	67.2	0		0	0	82.6	17.4		
PHF	.000	.000	.000	.000	.000	.250	.893	.000	.877	.877	.000	.817	.897	.000	.869	.000	.000	.823	.731	.869	.977

SW 80th Street & SW 70th Avenue

File Name : TMC-16 SW 80th Street & SW 70th Avenue
Site Code : 00000000
Start Date : 9/18/2018
Page No : 7

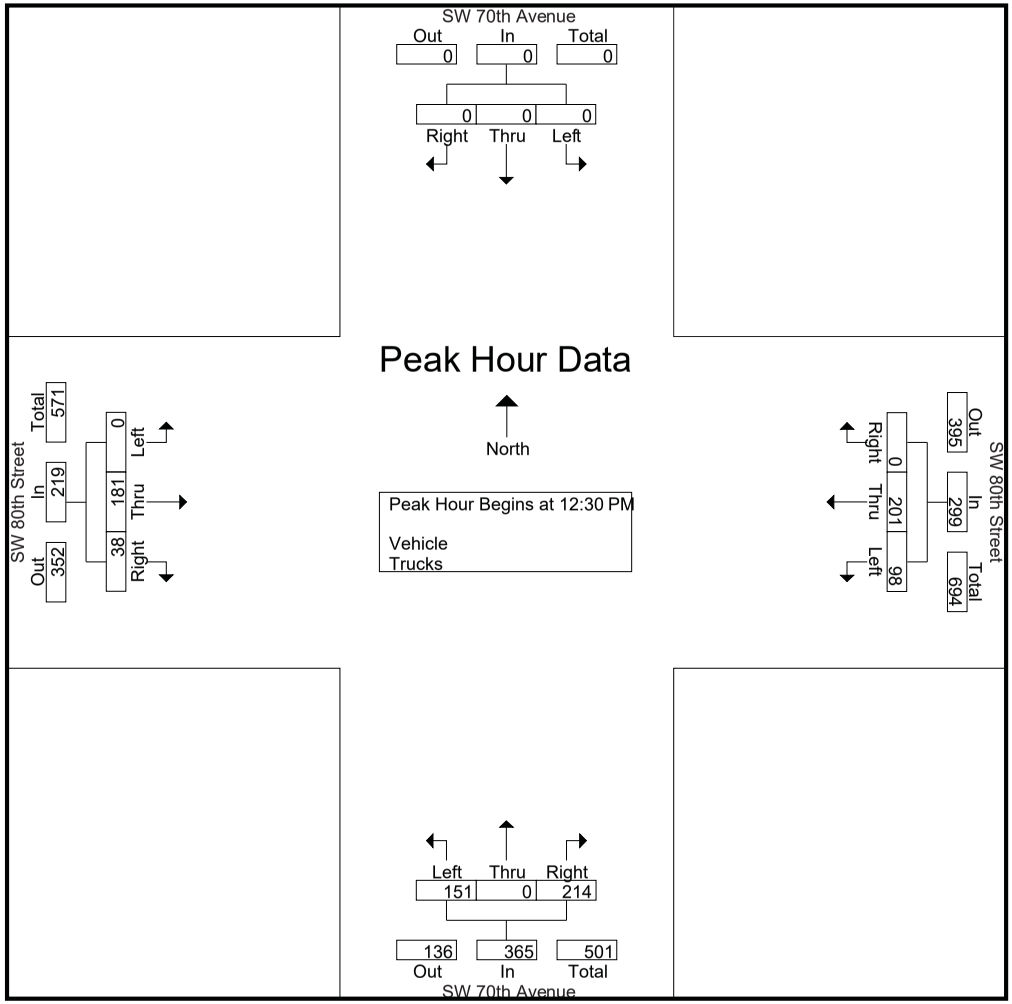

SW 80th Street & SW 70th Avenue

File Name : TMC-16 SW 80th Street & SW 70th Avenue
Site Code : 00000000
Start Date : 9/18/2018
Page No : 8

	SW 70th Avenue Southbound					SW 70th Avenue Northbound					SW 80th Street Westbound					SW 80th Street Eastbound					
Start Time	U-Turns	Left	Thru	Right	App. Total	U-Turns	Left	Thru	Right	App. Total	U-Turns	Left	Thru	Right	App. Total	U-Turns	Left	Thru	Right	App. Total	Int. Total
Peak Hour Analysis From 04:00 PM to 06:45 PM - Peak 1 of 1																					
Peak Hour for Entire Intersection Begins at 05:00 PM																					
05:00 PM	0	0	0	0	0	0	45	0	38	83	0	63	115	0	178	0	0	57	20	77	338
05:15 PM	0	0	0	0	0	**1**	68	0	42	111	0	62	107	0	169	0	0	49	19	68	348
05:30 PM	0	0	0	0	0	1	74	0	35	110	0	**69**	**126**	0	**195**	0	0	43	20	63	368
05:45 PM	0	0	0	0	0	1	**76**	0	**55**	**132**	0	55	108	0	163	0	0	**76**	**26**	**102**	**397**
Total Volume	0	0	0	0	0	3	263	0	170	436	0	249	456	0	705	0	0	225	85	310	1451
% App. Total	0	0	0	0		0.7	60.3	0	39		0	35.3	64.7	0		0	0	72.6	27.4		
PHF	.000	.000	.000	.000	.000	.750	.865	.000	.773	.826	.000	.902	.905	.000	.904	.000	.000	.740	.817	.760	.914

SW 80th Street & SW 70th Avenue

File Name : TMC-16 SW 80th Street & SW 70th Avenue
Site Code : 00000000
Start Date : 9/18/2018
Page No : 9

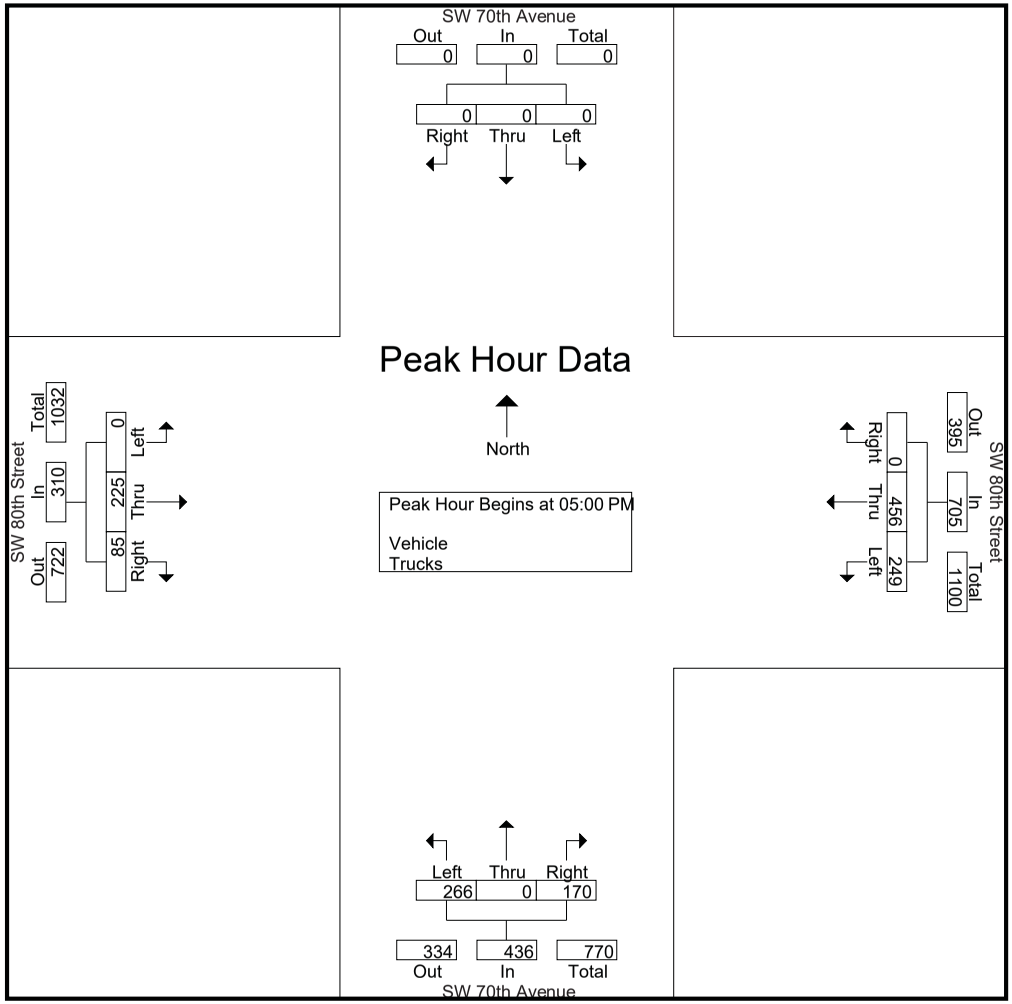

SW 16th Street & SW 69th Avenue

File Name : TMC-17 SW 16th Street & SW 69th Avenue
Site Code : 00000000
Start Date : 9/20/2018
Page No : 1

Groups Printed- Vehicle - Trucks

	SW 69th Avenue Southbound					SW 69th Avenue Northbound					SW 16th Street Westbound					SW 16th Street Eastbound					
Start Time	U-Turns	Left	Thru	Right	App. Total	U-Turns	Left	Thru	Right	App. Total	U-Turns	Left	Thru	Right	App. Total	U-Turns	Left	Thru	Right	App. Total	Int. Total
06:00 AM	0	2	0	1	3	0	0	0	0	0	0	0	15	0	15	0	4	14	0	18	36
06:15 AM	0	4	0	0	4	0	0	0	0	0	0	0	16	1	17	0	2	23	0	25	46
06:30 AM	0	2	0	1	3	0	0	0	0	0	0	0	31	4	35	0	2	43	0	45	83
06:45 AM	0	2	0	6	8	0	0	0	0	0	0	0	45	1	46	0	4	47	0	51	105
Total	0	10	0	8	18	0	0	0	0	0	0	0	107	6	113	0	12	127	0	139	270
07:00 AM	0	0	0	3	3	0	0	0	0	0	0	0	41	0	41	0	4	70	0	74	118
07:15 AM	0	1	0	3	4	0	0	0	0	0	0	0	49	2	51	0	6	93	0	99	154
07:30 AM	0	0	0	6	6	0	0	0	0	0	0	0	71	2	73	0	2	98	0	100	179
07:45 AM	0	0	0	9	9	0	0	0	0	0	0	0	66	1	67	0	5	111	0	116	192
Total	0	1	0	21	22	0	0	0	0	0	0	0	227	5	232	0	17	372	0	389	643
08:00 AM	0	3	0	7	10	0	0	0	0	0	0	0	57	2	59	0	6	108	0	114	183
08:15 AM	0	4	0	8	12	0	0	0	0	0	0	0	81	2	83	0	1	106	0	107	202
08:30 AM	0	2	0	7	9	0	0	0	0	0	0	0	61	4	65	0	2	115	0	117	191
08:45 AM	0	2	0	4	6	0	0	0	0	0	0	0	74	3	77	0	3	98	0	101	184
Total	0	11	0	26	37	0	0	0	0	0	0	0	273	11	284	0	12	427	0	439	760
*** BREAK ***																					
11:30 AM	0	1	0	0	1	0	0	0	0	0	0	0	39	1	40	0	3	51	0	54	95
11:45 AM	0	0	0	5	5	0	0	0	0	0	0	0	35	2	37	0	4	37	0	41	83
Total	0	1	0	5	6	0	0	0	0	0	0	0	74	3	77	0	7	88	0	95	178
12:00 PM	0	3	0	6	9	0	0	0	0	0	0	0	45	2	47	0	2	48	0	50	106
12:15 PM	0	1	0	6	7	0	0	0	0	0	0	0	45	1	46	0	3	34	0	37	90
12:30 PM	0	0	0	3	3	0	0	0	0	0	0	0	49	0	49	0	3	31	0	34	86
12:45 PM	0	1	0	8	9	0	0	0	0	0	0	0	55	1	56	0	3	46	0	49	114
Total	0	5	0	23	28	0	0	0	0	0	0	0	194	4	198	0	11	159	0	170	396
01:00 PM	0	1	0	7	8	0	0	0	0	0	0	0	55	2	57	0	2	40	0	42	107
01:15 PM	0	3	0	8	11	0	0	0	0	0	0	0	47	2	49	0	7	54	0	61	121
*** BREAK ***																					
Total	0	4	0	15	19	0	0	0	0	0	0	0	102	4	106	0	9	94	0	103	228

*** BREAK ***

SW 16th Street & SW 69th Avenue

File Name : TMC-17 SW 16th Street & SW 69th Avenue
Site Code : 00000000
Start Date : 9/20/2018
Page No : 2

Groups Printed- Vehicle - Trucks

	SW 69th Avenue Southbound					SW 69th Avenue Northbound					SW 16th Street Westbound					SW 16th Street Eastbound					
Start Time	U-Turns	Left	Thru	Right	App. Total	U-Turns	Left	Thru	Right	App. Total	U-Turns	Left	Thru	Right	App. Total	U-Turns	Left	Thru	Right	App. Total	Int. Total
04:00 PM	0	1	0	4	5	0	0	0	0	0	0	0	100	0	100	0	5	62	0	67	172
04:15 PM	0	1	0	5	6	0	0	0	0	0	0	0	107	1	108	0	2	34	0	36	150
04:30 PM	0	1	0	9	10	0	0	0	0	0	0	0	128	0	128	0	3	53	0	56	194
04:45 PM	0	4	0	8	12	0	0	0	0	0	0	0	121	1	122	0	2	51	0	53	187
Total	0	7	0	26	33	0	0	0	0	0	0	0	456	2	458	0	12	200	0	212	703
05:00 PM	0	4	0	14	18	0	0	0	0	0	0	0	125	0	125	0	3	53	0	56	199
05:15 PM	0	0	0	8	8	0	0	0	0	0	0	0	140	4	144	0	3	48	0	51	203
05:30 PM	0	1	0	9	10	0	0	0	0	0	0	0	140	3	143	0	2	59	0	61	214
05:45 PM	0	1	0	9	10	0	0	0	0	0	0	0	140	1	141	0	5	48	0	53	204
Total	0	6	0	40	46	0	0	0	0	0	0	0	545	8	553	0	13	208	0	221	820
06:00 PM	0	2	0	10	12	0	0	0	0	0	0	0	120	2	122	0	2	54	0	56	190
06:15 PM	0	0	0	7	7	0	0	0	0	0	0	0	119	2	121	0	3	36	0	39	167
06:30 PM	0	1	0	2	3	0	0	0	0	0	0	0	95	0	95	0	3	40	0	43	141
06:45 PM	0	4	0	5	9	0	0	0	0	0	0	0	84	1	85	0	4	25	0	29	123
Total	0	7	0	24	31	0	0	0	0	0	0	0	418	5	423	0	12	155	0	167	621
Grand Total	0	52	0	188	240	0	0	0	0	0	0	0	2396	48	2444	0	105	1830	0	1935	4619
Apprch %	0	21.7	0	78.3		0	0	0	0		0	0	98	2		0	5.4	94.6	0		
Total %	0	1.1	0	4.1	5.2	0	0	0	0	0	0	0	51.9	1	52.9	0	2.3	39.6	0	41.9	
Vehicle	0	51	0	187	238	0	0	0	0	0	0	0	2373	47	2420	0	103	1796	0	1899	4557
% Vehicle	0	98.1	0	99.5	99.2	0	0	0	0	0	0	0	99	97.9	99	0	98.1	98.1	0	98.1	98.7
Trucks	0	1	0	1	2	0	0	0	0	0	0	0	23	1	24	0	2	34	0	36	62
% Trucks	0	1.9	0	0.5	0.8	0	0	0	0	0	0	0	1	2.1	1	0	1.9	1.9	0	1.9	1.3

SW 16th Street & SW 69th Avenue

File Name : TMC-17 SW 16th Street & SW 69th Avenue
Site Code : 00000000
Start Date : 9/20/2018
Page No : 3

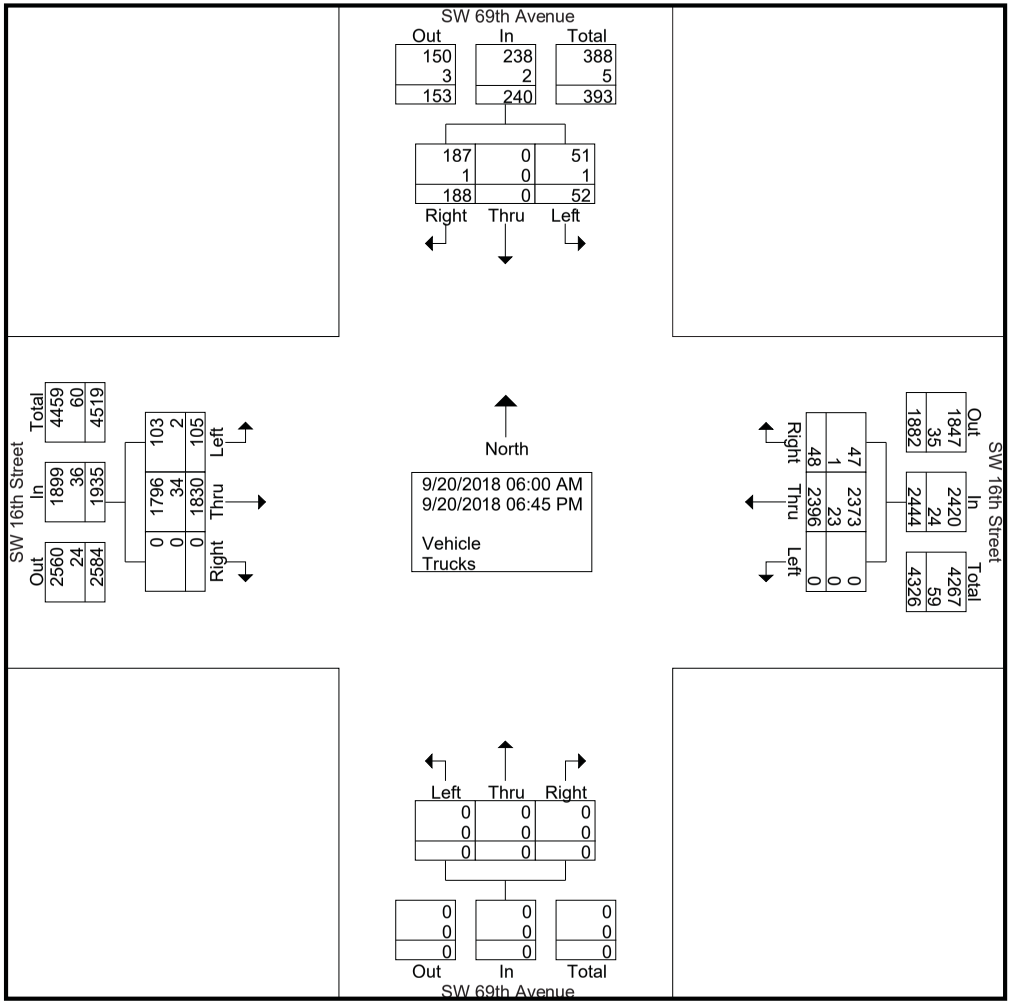

SW 16th Street & SW 69th Avenue

File Name : TMC-17 SW 16th Street & SW 69th Avenue
Site Code : 00000000
Start Date : 9/20/2018
Page No : 4

	SW 69th Avenue Southbound					SW 69th Avenue Northbound					SW 16th Street Westbound					SW 16th Street Eastbound					
Start Time	U-Turns	Left	Thru	Right	App. Total	U-Turns	Left	Thru	Right	App. Total	U-Turns	Left	Thru	Right	App. Total	U-Turns	Left	Thru	Right	App. Total	Int. Total
Peak Hour Analysis From 06:00 AM to 08:45 AM - Peak 1 of 1																					
Peak Hour for Entire Intersection Begins at 07:45 AM																					
07:45 AM	0	0	0	**9**	9	0	0	0	0	0	0	0	66	1	67	0	5	111	0	116	192
08:00 AM	0	3	0	7	10	0	0	0	0	0	0	0	57	2	59	0	**6**	108	0	114	183
08:15 AM	0	**4**	0	8	**12**	0	0	0	0	0	0	0	**81**	2	**83**	0	1	106	0	107	**202**
08:30 AM	0	2	0	7	9	0	0	0	0	0	0	0	61	**4**	65	0	2	**115**	0	**117**	191
Total Volume	0	9	0	31	40	0	0	0	0	0	0	0	265	9	274	0	14	440	0	454	768
% App. Total	0	22.5	0	77.5		0	0	0	0		0	0	96.7	3.3		0	3.1	96.9	0		
PHF	.000	.563	.000	.861	.833	.000	.000	.000	.000	.000	.000	.000	.818	.563	.825	.000	.583	.957	.000	.970	.950

SW 16th Street & SW 69th Avenue

File Name : TMC-17 SW 16th Street & SW 69th Avenue
Site Code : 00000000
Start Date : 9/20/2018
Page No : 5

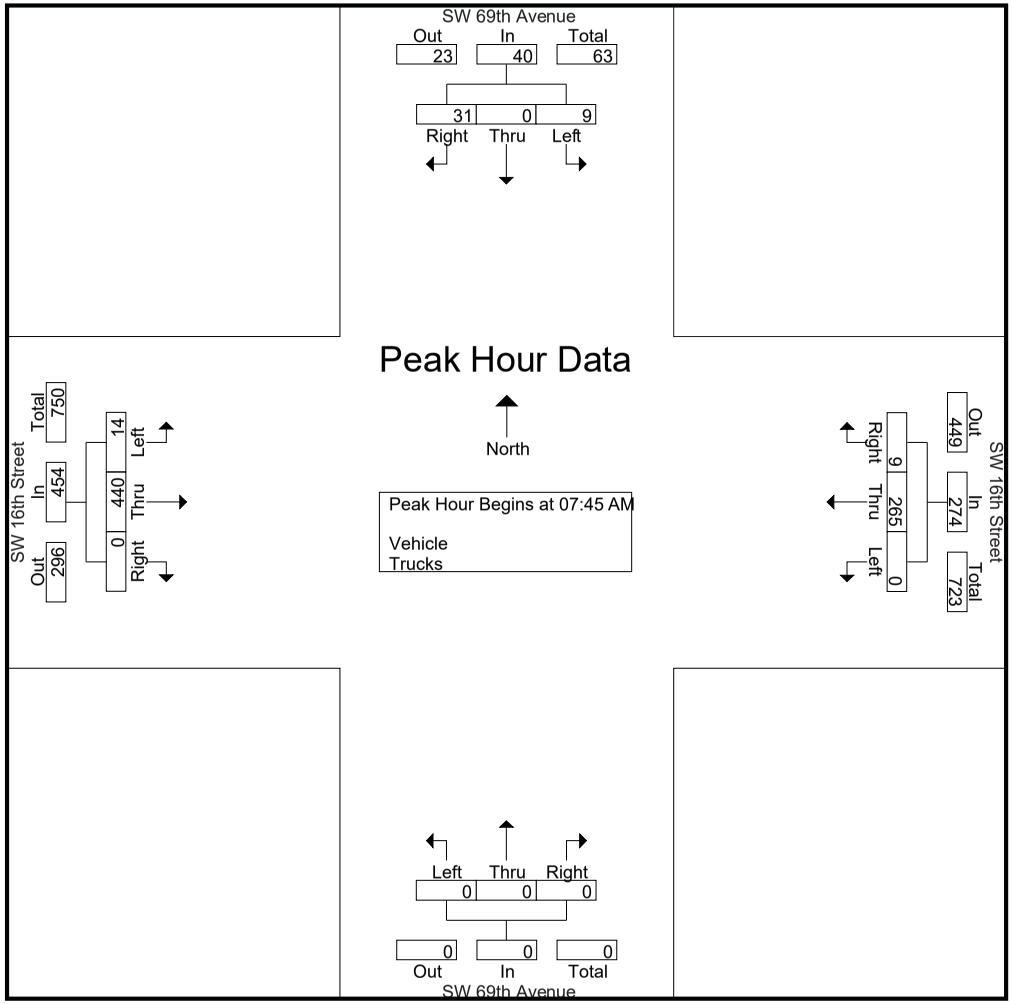

SW 16th Street & SW 69th Avenue

File Name : TMC-17 SW 16th Street & SW 69th Avenue
Site Code : 00000000
Start Date : 9/20/2018
Page No : 6

	SW 69th Avenue Southbound					SW 69th Avenue Northbound					SW 16th Street Westbound					SW 16th Street Eastbound					
Start Time	U-Turns	Left	Thru	Right	App. Total	U-Turns	Left	Thru	Right	App. Total	U-Turns	Left	Thru	Right	App. Total	U-Turns	Left	Thru	Right	App. Total	Int. Total
Peak Hour Analysis From 11:30 AM to 01:15 PM - Peak 1 of 1																					
Peak Hour for Entire Intersection Begins at 12:30 PM																					
12:30 PM	0	0	0	3	3	0	0	0	0	0	0	0	49	0	49	0	3	31	0	34	86
12:45 PM	0	1	0	**8**	9	0	0	0	0	0	0	0	**55**	1	56	0	3	46	0	49	114
01:00 PM	0	1	0	7	8	0	0	0	0	0	0	0	55	**2**	**57**	0	2	40	0	42	107
01:15 PM	0	**3**	0	8	**11**	0	0	0	0	0	0	0	47	2	49	0	**7**	**54**	0	**61**	**121**
Total Volume	0	5	0	26	31	0	0	0	0	0	0	0	206	5	211	0	15	171	0	186	428
% App. Total	0	16.1	0	83.9		0	0	0	0		0	0	97.6	2.4		0	8.1	91.9	0		
PHF	.000	.417	.000	.813	.705	.000	.000	.000	.000	.000	.000	.000	.936	.625	.925	.000	.536	.792	.000	.762	.884

SW 16th Street & SW 69th Avenue

File Name : TMC-17 SW 16th Street & SW 69th Avenue
Site Code : 00000000
Start Date : 9/20/2018
Page No : 7

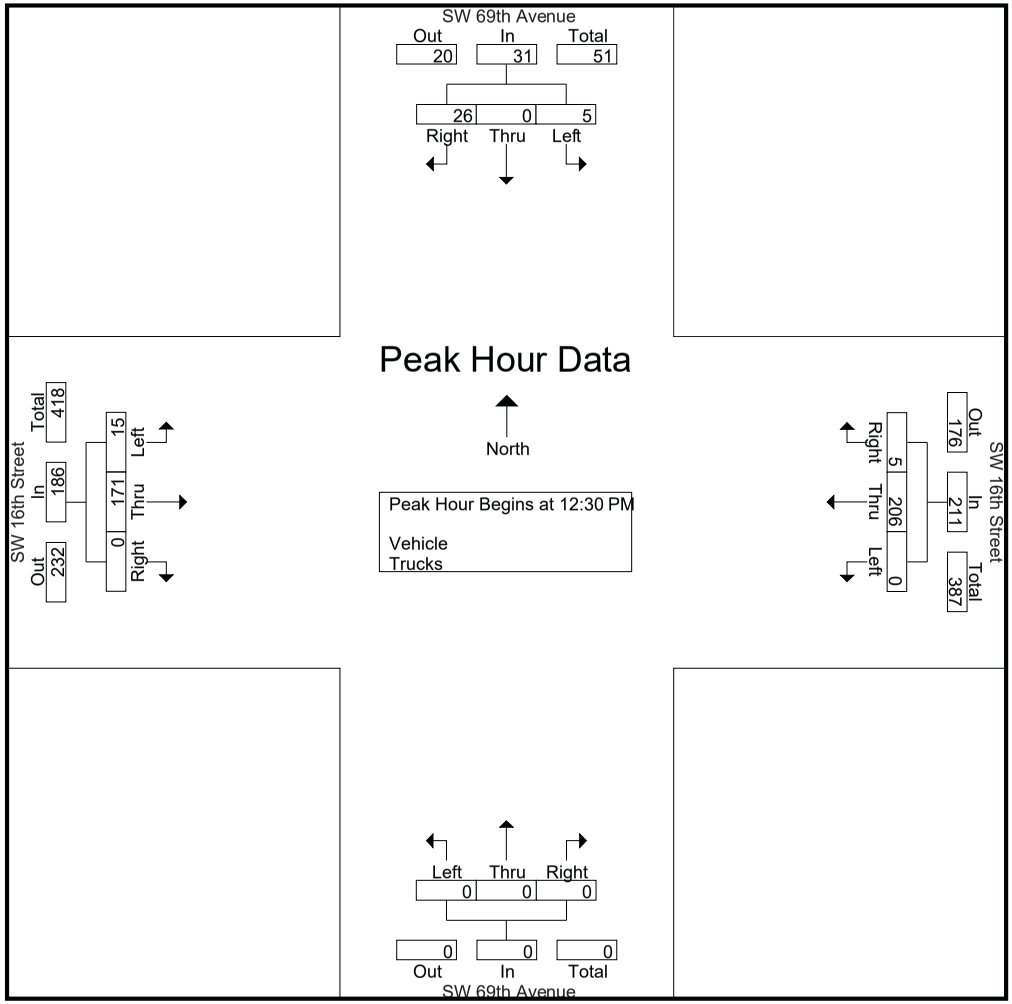

SW 16th Street & SW 69th Avenue

File Name : TMC-17 SW 16th Street & SW 69th Avenue
Site Code : 00000000
Start Date : 9/20/2018
Page No : 8

	SW 69th Avenue Southbound					SW 69th Avenue Northbound					SW 16th Street Westbound					SW 16th Street Eastbound					
Start Time	U-Turns	Left	Thru	Right	App. Total	U-Turns	Left	Thru	Right	App. Total	U-Turns	Left	Thru	Right	App. Total	U-Turns	Left	Thru	Right	App. Total	Int. Total
Peak Hour Analysis From 04:00 PM to 06:45 PM - Peak 1 of 1																					
Peak Hour for Entire Intersection Begins at 05:00 PM																					
05:00 PM	0	**4**	0	**14**	**18**	0	0	0	0	0	0	0	125	0	125	0	3	53	0	56	199
05:15 PM	0	0	0	8	8	0	0	0	0	0	0	0	**140**	**4**	**144**	0	3	48	0	51	203
05:30 PM	0	1	0	9	10	0	0	0	0	0	0	0	140	3	143	0	2	**59**	0	**61**	**214**
05:45 PM	0	1	0	9	10	0	0	0	0	0	0	0	140	1	141	0	**5**	48	0	53	204
Total Volume	0	6	0	40	46	0	0	0	0	0	0	0	545	8	553	0	13	208	0	221	820
% App. Total	0	13	0	87		0	0	0	0		0	0	98.6	1.4		0	5.9	94.1	0		
PHF	.000	.375	.000	.714	.639	.000	.000	.000	.000	.000	.000	.000	.973	.500	.960	.000	.650	.881	.000	.906	.958

SW 16th Street & SW 69th Avenue

File Name : TMC-17 SW 16th Street & SW 69th Avenue
Site Code : 00000000
Start Date : 9/20/2018
Page No : 9

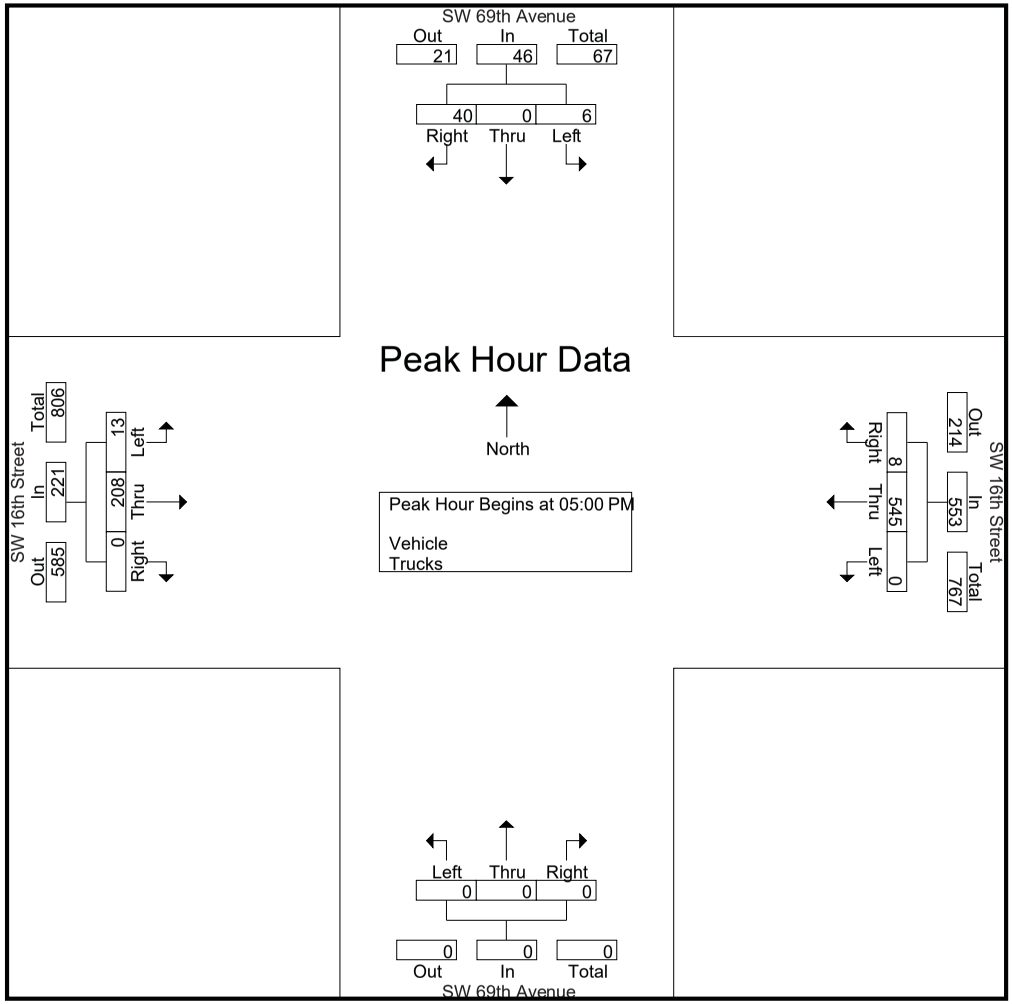

SW 72nd Street & SW 70th Avenue

File Name : TMC-18 SW 72nd Street & SW 70th Avenue
Site Code : 00000000
Start Date : 9/18/2018
Page No : 1

Groups Printed- Vehicle - Trucks

	SW 70th Avenue Southbound					SW 70th Avenue Northbound					SW 72nd Street Westbound					SW 72nd Street Eastbound					
Start Time	U-Turns	Left	Thru	Right	App. Total	U-Turns	Left	Thru	Right	App. Total	U-Turns	Left	Thru	Right	App. Total	U-Turns	Left	Thru	Right	App. Total	Int. Total
06:00 AM	0	0	0	0	0	0	0	0	0	0	0	0	54	0	54	0	0	225	0	225	279
06:15 AM	0	2	0	0	2	0	0	0	0	0	0	0	59	0	59	0	1	314	0	315	376
06:30 AM	0	2	0	1	3	0	0	0	0	0	0	0	74	0	74	0	0	388	0	388	465
06:45 AM	0	1	0	1	2	0	0	0	0	0	0	0	88	0	88	0	0	453	0	453	543
Total	0	5	0	2	7	0	0	0	0	0	0	0	275	0	275	0	1	1380	0	1381	1663
07:00 AM	0	0	0	1	1	0	0	0	0	0	0	0	127	2	129	1	0	450	0	451	581
07:15 AM	0	3	0	1	4	0	0	0	0	0	0	0	176	0	176	0	2	432	0	434	614
07:30 AM	0	0	0	2	2	0	0	0	0	0	0	0	157	0	157	0	1	394	0	395	554
07:45 AM	0	3	0	1	4	0	0	0	0	0	0	0	146	2	148	0	0	349	0	349	501
Total	0	6	0	5	11	0	0	0	0	0	0	0	606	4	610	1	3	1625	0	1629	2250
08:00 AM	0	0	0	2	2	0	0	0	0	0	0	0	173	2	175	0	4	313	0	317	494
08:15 AM	0	2	0	2	4	0	0	0	0	0	0	0	174	1	175	0	2	355	0	357	536
08:30 AM	0	2	0	1	3	0	0	0	0	0	0	0	182	1	183	1	0	344	0	345	531
08:45 AM	0	0	0	2	2	0	0	0	0	0	0	0	170	1	171	0	5	424	0	429	602
Total	0	4	0	7	11	0	0	0	0	0	0	0	699	5	704	1	11	1436	0	1448	2163
*** BREAK ***																					
11:30 AM	0	0	0	2	2	0	0	0	0	0	0	0	268	0	268	0	1	220	0	221	491
11:45 AM	0	1	0	2	3	0	0	0	0	0	0	0	224	1	225	0	1	231	0	232	460
Total	0	1	0	4	5	0	0	0	0	0	0	0	492	1	493	0	2	451	0	453	951
12:00 PM	0	1	0	3	4	0	0	0	0	0	0	0	266	0	266	1	1	214	0	216	486
12:15 PM	0	0	0	1	1	0	0	0	0	0	0	0	261	1	262	0	3	269	0	272	535
12:30 PM	0	1	0	1	2	0	0	0	0	0	0	0	248	0	248	0	2	271	0	273	523
12:45 PM	0	2	0	2	4	0	0	0	0	0	0	0	254	1	255	0	1	232	0	233	492
Total	0	4	0	7	11	0	0	0	0	0	0	0	1029	2	1031	1	7	986	0	994	2036
01:00 PM	0	2	0	1	3	0	0	0	0	0	0	0	258	3	261	0	0	250	0	250	514
01:15 PM	0	2	0	1	3	0	0	0	0	0	0	0	235	3	238	0	2	267	0	269	510
*** BREAK ***																					
Total	0	4	0	2	6	0	0	0	0	0	0	0	493	6	499	0	2	517	0	519	1024

*** BREAK ***

SW 72nd Street & SW 70th Avenue

File Name : TMC-18 SW 72nd Street & SW 70th Avenue
Site Code : 00000000
Start Date : 9/18/2018
Page No : 2

Groups Printed- Vehicle - Trucks

	SW 70th Avenue Southbound					SW 70th Avenue Northbound					SW 72nd Street Westbound					SW 72nd Street Eastbound					
Start Time	U-Turns	Left	Thru	Right	App. Total	U-Turns	Left	Thru	Right	App. Total	U-Turns	Left	Thru	Right	App. Total	U-Turns	Left	Thru	Right	App. Total	Int. Total
04:00 PM	0	2	0	2	4	0	0	0	0	0	0	0	407	1	408	0	1	248	0	249	661
04:15 PM	0	2	0	6	8	0	0	0	0	0	0	0	407	0	407	0	3	215	0	218	633
04:30 PM	0	1	0	3	4	0	0	0	0	0	0	0	418	0	418	0	0	217	0	217	639
04:45 PM	0	1	0	0	1	0	0	0	0	0	0	0	377	4	381	0	5	182	0	187	569
Total	0	6	0	11	17	0	0	0	0	0	0	0	1609	5	1614	0	9	862	0	871	2502
05:00 PM	0	0	0	3	3	0	0	0	0	0	0	0	418	1	419	4	1	196	0	201	623
05:15 PM	0	0	0	1	1	0	0	0	0	0	0	0	365	0	365	0	1	196	0	197	563
05:30 PM	0	0	0	5	5	0	0	0	0	0	0	0	412	2	414	0	3	199	0	202	621
05:45 PM	0	0	0	5	5	0	0	0	0	0	0	0	354	1	355	0	7	226	0	233	593
Total	0	0	0	14	14	0	0	0	0	0	0	0	1549	4	1553	4	12	817	0	833	2400
06:00 PM	0	0	0	0	0	0	0	0	0	0	0	0	339	1	340	0	0	197	0	197	537
06:15 PM	0	1	0	1	2	0	0	0	0	0	0	0	312	0	312	0	1	210	0	211	525
06:30 PM	0	0	0	3	3	0	0	0	0	0	0	0	335	1	336	0	3	233	0	236	575
06:45 PM	0	1	0	3	4	0	0	0	0	0	0	0	295	1	296	2	0	180	0	182	482
Total	0	2	0	7	9	0	0	0	0	0	0	0	1281	3	1284	2	4	820	0	826	2119
Grand Total	0	32	0	59	91	0	0	0	0	0	0	0	8033	30	8063	9	51	8894	0	8954	17108
Apprch %	0	35.2	0	64.8		0	0	0	0		0	0	99.6	0.4		0.1	0.6	99.3	0		
Total %	0	0.2	0	0.3	0.5	0	0	0	0	0	0	0	47	0.2	47.1	0.1	0.3	52	0	52.3	
Vehicle	0	31	0	57	88	0	0	0	0	0	0	0	7917	30	7947	9	50	8803	0	8862	16897
% Vehicle	0	96.9	0	96.6	96.7	0	0	0	0	0	0	0	98.6	100	98.6	100	98	99	0	99	98.8
Trucks	0	1	0	2	3	0	0	0	0	0	0	0	116	0	116	0	1	91	0	92	211
% Trucks	0	3.1	0	3.4	3.3	0	0	0	0	0	0	0	1.4	0	1.4	0	2	1	0	1	1.2

SW 72nd Street & SW 70th Avenue

File Name : TMC-18 SW 72nd Street & SW 70th Avenue
Site Code : 00000000
Start Date : 9/18/2018
Page No : 3

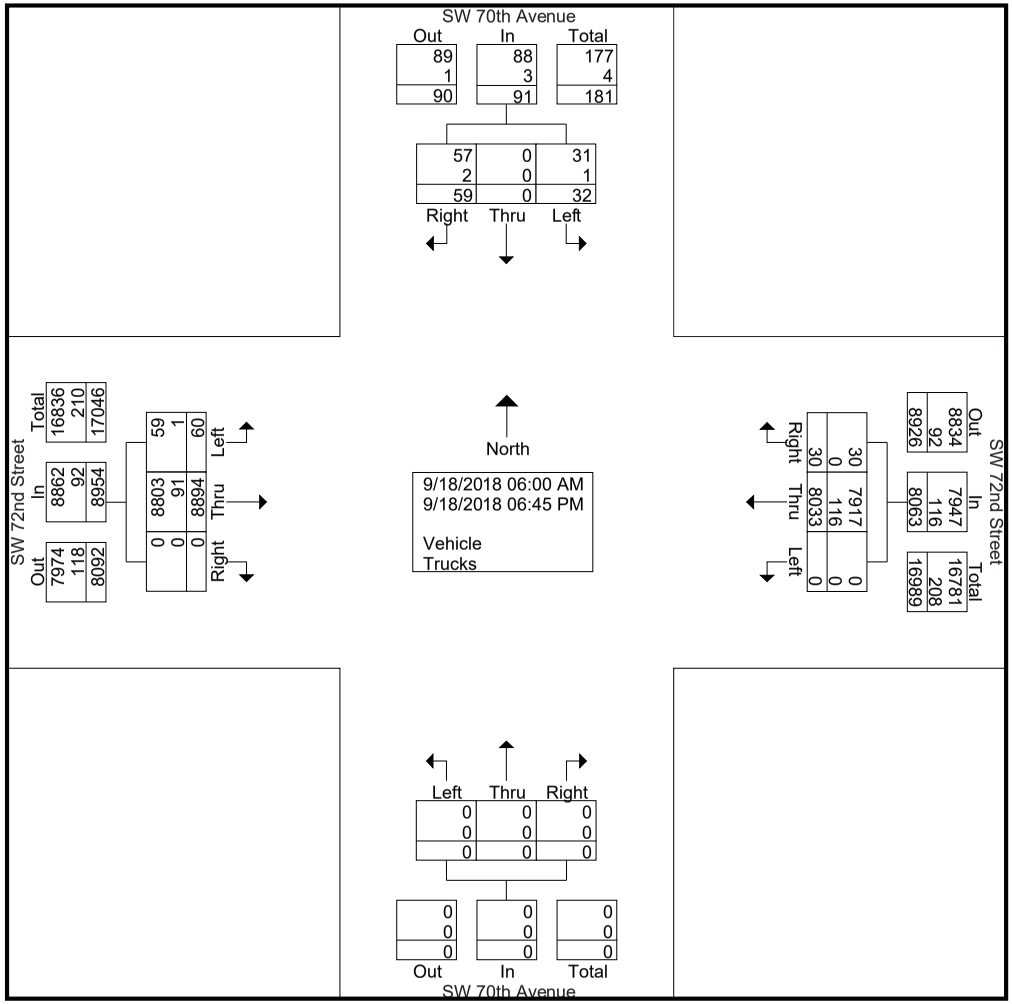

SW 72nd Street & SW 70th Avenue

File Name : TMC-18 SW 72nd Street & SW 70th Avenue
Site Code : 00000000
Start Date : 9/18/2018
Page No : 4

	SW 70th Avenue Southbound					SW 70th Avenue Northbound					SW 72nd Street Westbound					SW 72nd Street Eastbound					
Start Time	U-Turns	Left	Thru	Right	App. Total	U-Turns	Left	Thru	Right	App. Total	U-Turns	Left	Thru	Right	App. Total	U-Turns	Left	Thru	Right	App. Total	Int. Total
Peak Hour Analysis From 06:00 AM to 08:45 AM - Peak 1 of 1																					
Peak Hour for Entire Intersection Begins at 06:45 AM																					
06:45 AM	0	1	0	1	2	0	0	0	0	0	0	0	88	0	88	0	0	**453**	0	**453**	543
07:00 AM	0	0	0	1	1	0	0	0	0	0	0	0	127	**2**	129	**1**	0	450	0	451	581
07:15 AM	0	**3**	0	1	**4**	0	0	0	0	0	0	0	**176**	0	**176**	0	**2**	432	0	434	**614**
07:30 AM	0	0	0	**2**	2	0	0	0	0	0	0	0	157	0	157	0	1	394	0	395	554
Total Volume	0	4	0	5	9	0	0	0	0	0	0	0	548	2	550	1	3	1729	0	1733	2292
% App. Total	0	44.4	0	55.6		0	0	0	0		0	0	99.6	0.4		0.1	0.2	99.8	0		
PHF	.000	.333	.000	.625	.563	.000	.000	.000	.000	.000	.000	.000	.778	.250	.781	.250	.375	.954	.000	.956	.933

SW 72nd Street & SW 70th Avenue

File Name : TMC-18 SW 72nd Street & SW 70th Avenue
Site Code : 00000000
Start Date : 9/18/2018
Page No : 5

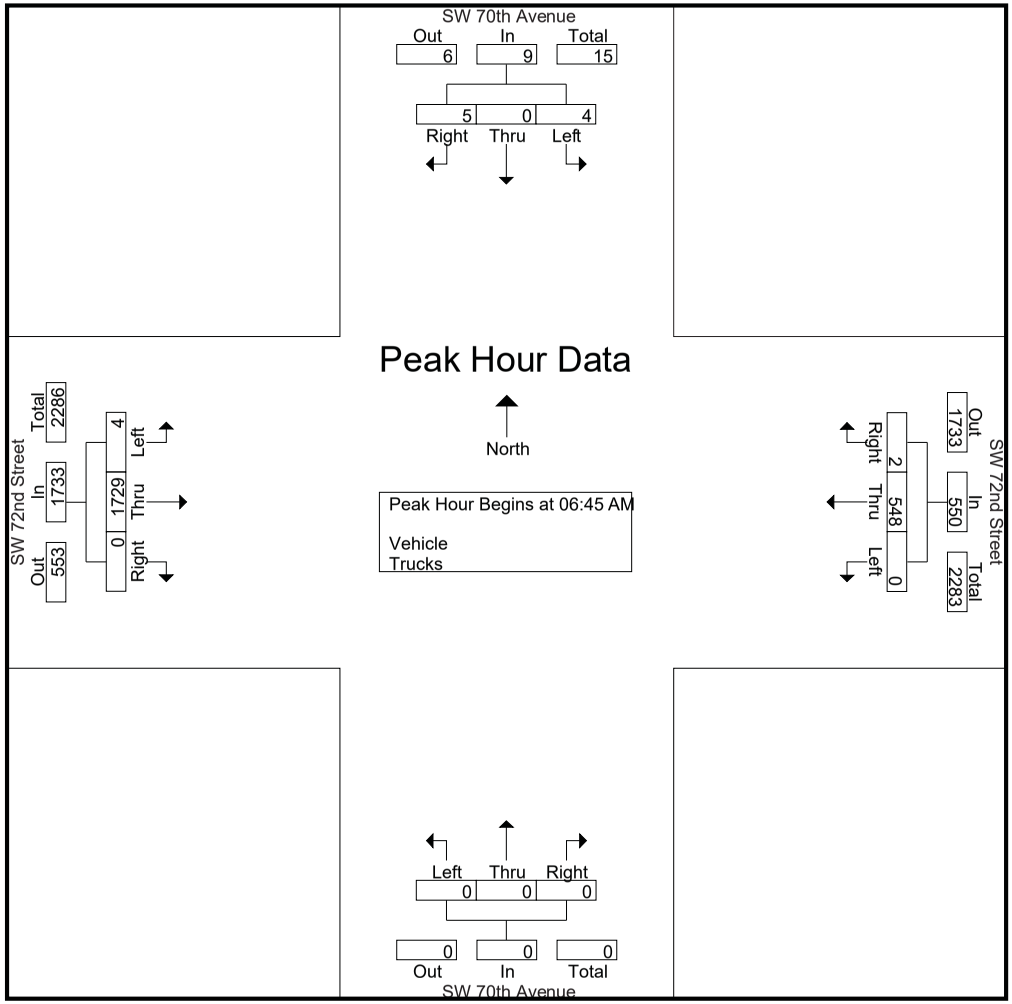

SW 72nd Street & SW 70th Avenue

File Name : TMC-18 SW 72nd Street & SW 70th Avenue
Site Code : 00000000
Start Date : 9/18/2018
Page No : 6

	SW 70th Avenue Southbound					SW 70th Avenue Northbound					SW 72nd Street Westbound					SW 72nd Street Eastbound					
Start Time	U-Turns	Left	Thru	Right	App. Total	U-Turns	Left	Thru	Right	App. Total	U-Turns	Left	Thru	Right	App. Total	U-Turns	Left	Thru	Right	App. Total	Int. Total
Peak Hour Analysis From 11:30 AM to 01:15 PM - Peak 1 of 1																					
Peak Hour for Entire Intersection Begins at 12:15 PM																					
12:15 PM	0	0	0	1	1	0	0	0	0	0	0	0	**261**	1	**262**	0	**3**	269	0	272	**535**
12:30 PM	0	1	0	1	2	0	0	0	0	0	0	0	248	0	248	0	2	**271**	0	**273**	523
12:45 PM	0	**2**	0	**2**	**4**	0	0	0	0	0	0	0	254	1	255	0	1	232	0	233	492
01:00 PM	0	2	0	1	3	0	0	0	0	0	0	0	258	**3**	261	0	0	250	0	250	514
Total Volume	0	5	0	5	10	0	0	0	0	0	0	0	1021	5	1026	0	6	1022	0	1028	2064
% App. Total	0	50	0	50		0	0	0	0		0	0	99.5	0.5		0	0.6	99.4	0		
PHF	.000	.625	.000	.625	.625	.000	.000	.000	.000	.000	.000	.000	.978	.417	.979	.000	.500	.943	.000	.941	.964

SW 72nd Street & SW 70th Avenue

File Name : TMC-18 SW 72nd Street & SW 70th Avenue
Site Code : 00000000
Start Date : 9/18/2018
Page No : 7

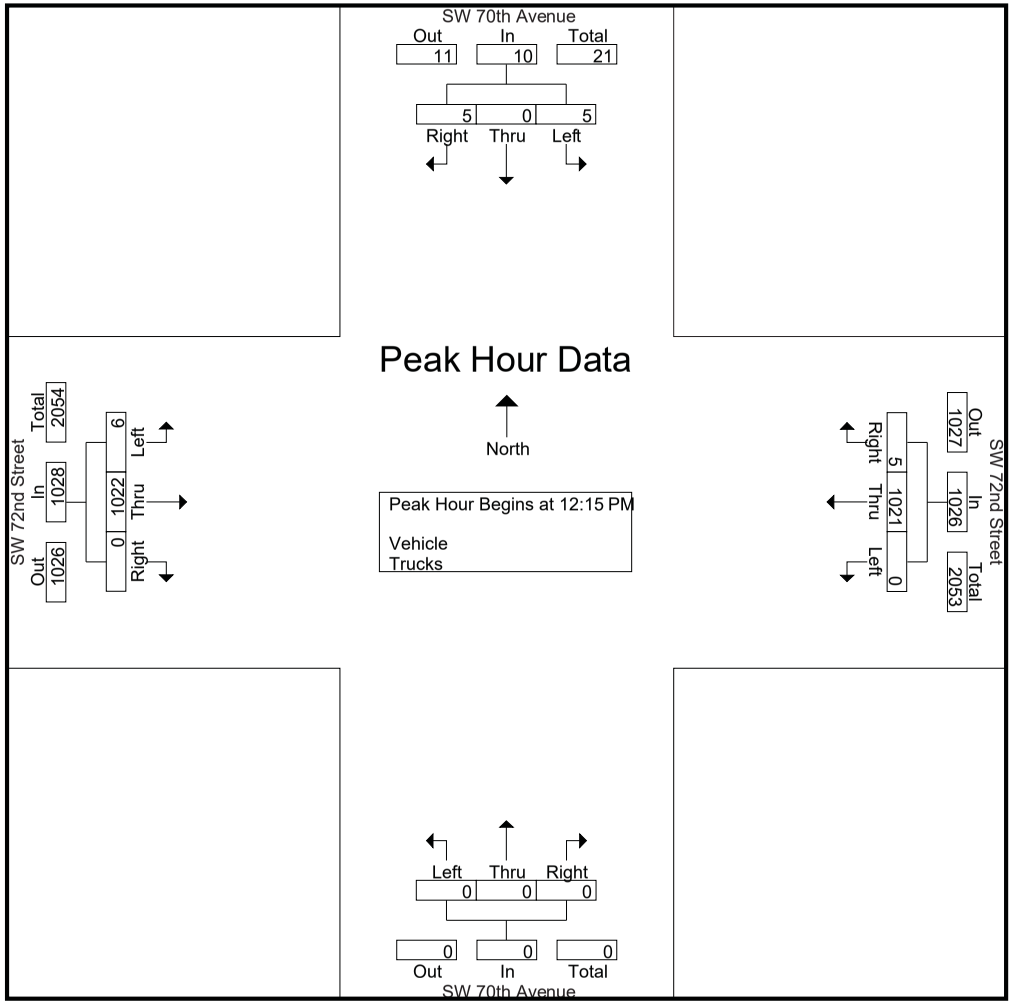

SW 72nd Street & SW 70th Avenue

File Name : TMC-18 SW 72nd Street & SW 70th Avenue
Site Code : 00000000
Start Date : 9/18/2018
Page No : 8

	SW 70th Avenue Southbound					SW 70th Avenue Northbound					SW 72nd Street Westbound					SW 72nd Street Eastbound					
Start Time	U-Turns	Left	Thru	Right	App. Total	U-Turns	Left	Thru	Right	App. Total	U-Turns	Left	Thru	Right	App. Total	U-Turns	Left	Thru	Right	App. Total	Int. Total
Peak Hour Analysis From 04:00 PM to 06:45 PM - Peak 1 of 1																					
Peak Hour for Entire Intersection Begins at 04:00 PM																					
04:00 PM	0	**2**	0	2	4	0	0	0	0	0	0	0	407	1	408	0	1	**248**	0	**249**	**661**
04:15 PM	0	2	0	**6**	**8**	0	0	0	0	0	0	0	407	0	407	0	3	215	0	218	633
04:30 PM	0	1	0	3	4	0	0	0	0	0	0	0	**418**	0	**418**	0	0	217	0	217	639
04:45 PM	0	1	0	0	1	0	0	0	0	0	0	0	377	**4**	381	0	**5**	182	0	187	569
Total Volume	0	6	0	11	17	0	0	0	0	0	0	0	1609	5	1614	0	9	862	0	871	2502
% App. Total	0	35.3	0	64.7		0	0	0	0		0	0	99.7	0.3		0	1	99	0		
PHF	.000	.750	.000	.458	.531	.000	.000	.000	.000	.000	.000	.000	.962	.313	.965	.000	.450	.869	.000	.874	.946

SW 72nd Street & SW 70th Avenue

File Name : TMC-18 SW 72nd Street & SW 70th Avenue
Site Code : 00000000
Start Date : 9/18/2018
Page No : 9

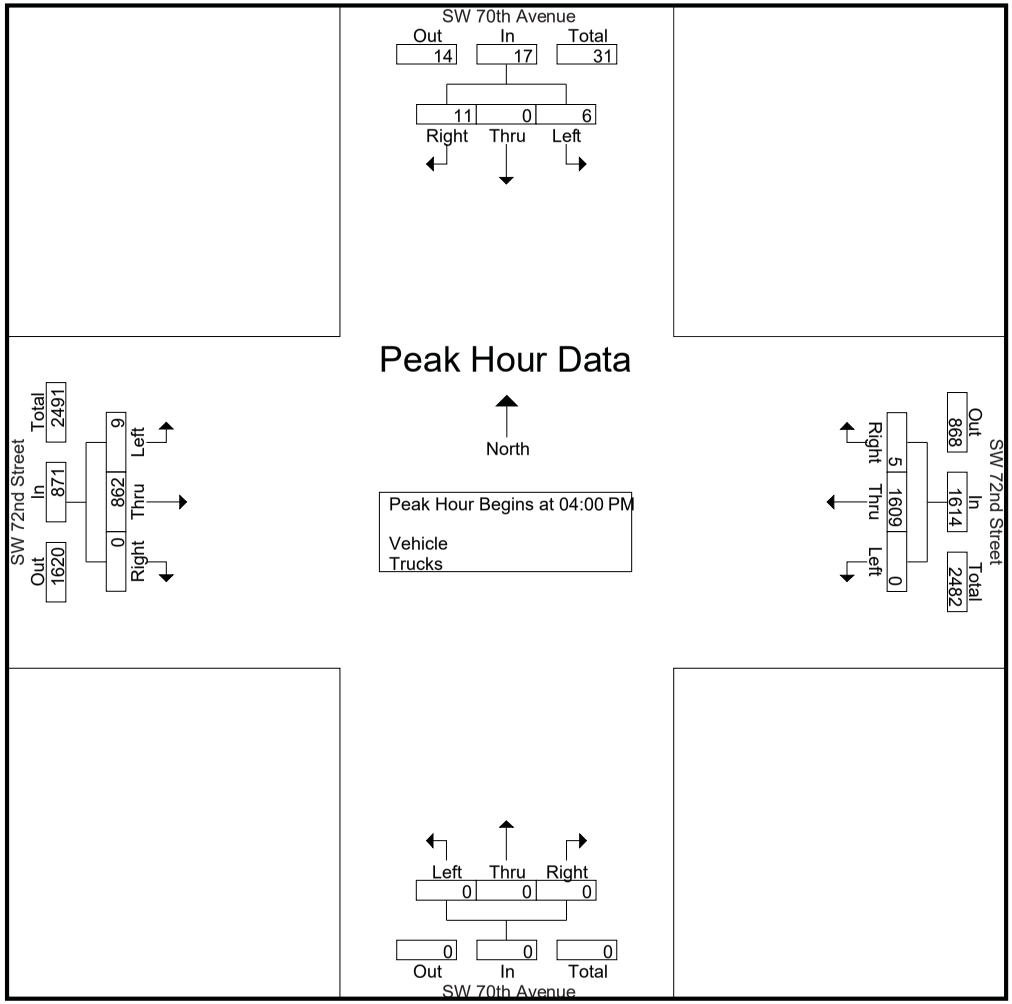

SW 60th Street & SW 69th Avenue

File Name : TMC-19 SW 60th Street & SW 69th Avenue
Site Code : 00000000
Start Date : 9/18/2018
Page No : 1

Groups Printed- Vehicle - Trucks

	SW 69th Avenue Southbound					SW 69th Avenue Northbound					SW 60th Street Westbound					SW 60th Street Eastbound					
Start Time	U-Turns	Left	Thru	Right	App. Total	U-Turns	Left	Thru	Right	App. Total	U-Turns	Left	Thru	Right	App. Total	U-Turns	Left	Thru	Right	App. Total	Int. Total
06:00 AM	0	1	2	0	3	0	0	0	0	0	0	1	0	1	2	0	0	0	1	1	6
06:15 AM	0	1	0	1	2	0	0	0	0	0	0	0	0	1	1	0	0	2	0	2	5
06:30 AM	0	3	2	1	6	0	0	0	0	0	0	0	3	1	4	0	0	4	1	5	15
06:45 AM	0	3	3	1	7	0	0	0	0	0	0	0	1	1	2	0	1	5	1	7	16
Total	0	8	7	3	18	0	0	0	0	0	0	1	4	4	9	0	1	11	3	15	42
07:00 AM	0	0	0	0	0	0	0	0	0	0	0	0	8	0	8	0	0	22	0	22	30
07:15 AM	0	20	3	3	26	0	0	0	0	0	0	0	4	1	5	0	0	39	5	44	75
07:30 AM	0	54	12	4	70	0	0	0	0	0	0	0	0	0	0	0	4	33	5	42	112
07:45 AM	0	73	8	2	83	0	0	1	0	1	0	0	1	0	1	0	9	41	8	58	143
Total	0	147	23	9	179	0	0	1	0	1	0	0	13	1	14	0	13	135	18	166	360
08:00 AM	0	70	4	2	76	0	0	1	0	1	0	0	0	0	0	0	3	9	9	21	98
08:15 AM	0	59	6	2	67	0	1	0	0	1	0	0	0	0	0	0	5	36	4	45	113
08:30 AM	0	21	0	4	25	0	0	0	0	0	0	0	1	0	1	0	6	12	0	18	44
08:45 AM	0	3	0	3	6	0	0	0	0	0	0	0	1	0	1	0	3	7	0	10	17
Total	0	153	10	11	174	0	1	1	0	2	0	0	2	0	2	0	17	64	13	94	272
*** BREAK ***																					
11:30 AM	0	1	0	1	2	0	0	0	1	1	0	0	1	1	2	0	0	3	0	3	8
11:45 AM	0	1	0	0	1	0	0	0	0	0	0	0	0	0	0	0	1	2	0	3	4
Total	0	2	0	1	3	0	0	0	1	1	0	0	1	1	2	0	1	5	0	6	12
12:00 PM	0	1	0	2	3	0	0	0	0	0	0	0	1	0	1	0	3	1	0	4	8
12:15 PM	0	1	0	1	2	0	0	0	0	0	0	0	1	0	1	0	1	1	0	2	5
12:30 PM	0	2	0	2	4	0	0	0	0	0	0	0	1	0	1	0	0	2	0	2	7
12:45 PM	0	3	0	2	5	0	0	0	0	0	0	0	1	1	2	0	0	4	0	4	11
Total	0	7	0	7	14	0	0	0	0	0	0	0	4	1	5	0	4	8	0	12	31
01:00 PM	0	6	0	2	8	0	0	0	0	0	0	0	3	1	4	0	1	5	0	6	18
01:15 PM	0	7	0	2	9	0	0	0	0	0	0	0	3	1	4	0	1	7	0	8	21
*** BREAK ***																					
01:45 PM	0	21	0	3	24	0	0	0	0	0	0	0	1	0	1	0	5	3	0	8	33
Total	0	34	0	7	41	0	0	0	0	0	0	0	7	2	9	0	7	15	0	22	72
02:00 PM	0	14	0	6	20	0	0	0	0	0	0	0	2	0	2	0	4	8	0	12	34
02:15 PM	0	16	0	6	22	0	0	0	0	0	0	0	2	0	2	0	2	10	0	12	36
02:30 PM	0	21	0	4	25	0	0	0	0	0	0	0	0	0	0	0	2	13	0	15	40
02:45 PM	0	24	0	9	33	0	0	0	0	0	0	0	1	0	1	0	1	5	0	6	40
Total	0	75	0	25	100	0	0	0	0	0	0	0	5	0	5	0	9	36	0	45	150

SW 60th Street & SW 69th Avenue

File Name : TMC-19 SW 60th Street & SW 69th Avenue
Site Code : 00000000
Start Date : 9/18/2018
Page No : 2

Groups Printed- Vehicle - Trucks

	SW 69th Avenue Southbound					SW 69th Avenue Northbound					SW 60th Street Westbound					SW 60th Street Eastbound					
Start Time	U-Turns	Left	Thru	Right	App. Total	U-Turns	Left	Thru	Right	App. Total	U-Turns	Left	Thru	Right	App. Total	U-Turns	Left	Thru	Right	App. Total	Int. Total
03:00 PM	0	27	0	12	39	0	0	0	0	0	0	0	7	0	7	0	8	7	0	15	61
03:15 PM	0	30	0	23	53	0	0	0	0	0	0	0	18	3	21	0	13	16	0	29	103
*** BREAK ***																					
Total	0	57	0	35	92	0	0	0	0	0	0	0	25	3	28	0	21	23	0	44	164
04:00 PM	0	12	0	4	16	0	0	0	0	0	0	0	9	0	9	0	1	5	0	6	31
04:15 PM	0	12	0	7	19	0	0	0	0	0	0	0	7	1	8	0	1	8	0	9	36
04:30 PM	0	9	0	4	13	0	0	0	0	0	0	0	19	4	23	0	2	3	0	5	41
04:45 PM	0	8	0	3	11	0	0	0	0	0	0	0	18	1	19	0	0	6	0	6	36
Total	0	41	0	18	59	0	0	0	0	0	0	0	53	6	59	0	4	22	0	26	144
05:00 PM	0	7	0	2	9	0	0	0	0	0	0	0	19	7	26	0	2	7	0	9	44
05:15 PM	0	6	0	8	14	0	0	0	0	0	0	0	35	11	46	0	2	5	0	7	67
05:30 PM	0	7	0	14	21	0	0	0	0	0	0	0	26	8	34	0	1	9	0	10	65
05:45 PM	0	7	0	14	21	0	0	0	0	0	0	0	26	5	31	0	2	5	0	7	59
Total	0	27	0	38	65	0	0	0	0	0	0	0	106	31	137	0	7	26	0	33	235
06:00 PM	0	1	0	9	10	0	0	0	0	0	0	0	19	1	20	0	2	2	0	4	34
06:15 PM	0	1	0	4	5	0	0	0	0	0	0	0	8	0	8	0	2	2	0	4	17
06:30 PM	0	0	0	4	4	0	0	0	0	0	0	0	9	1	10	0	0	1	0	1	15
06:45 PM	0	0	0	2	2	0	0	0	0	0	0	0	10	0	10	0	1	2	0	3	15
Total	0	2	0	19	21	0	0	0	0	0	0	0	46	2	48	0	5	7	0	12	81
Grand Total	0	553	40	173	766	0	1	2	1	4	0	1	266	51	318	0	89	352	34	475	1563
Apprch %	0	72.2	5.2	22.6		0	25	50	25		0	0.3	83.6	16		0	18.7	74.1	7.2		
Total %	0	35.4	2.6	11.1	49	0	0.1	0.1	0.1	0.3	0	0.1	17	3.3	20.3	0	5.7	22.5	2.2	30.4	
Vehicle	0	548	40	170	758	0	1	2	1	4	0	1	264	51	316	0	89	352	34	475	1553
% Vehicle	0	99.1	100	98.3	99	0	100	100	100	100	0	100	99.2	100	99.4	0	100	100	100	100	99.4
Trucks	0	5	0	3	8	0	0	0	0	0	0	0	2	0	2	0	0	0	0	0	10
% Trucks	0	0.9	0	1.7	1	0	0	0	0	0	0	0	0.8	0	0.6	0	0	0	0	0	0.6

SW 60th Street & SW 69th Avenue

File Name : TMC-19 SW 60th Street & SW 69th Avenue
Site Code : 00000000
Start Date : 9/18/2018
Page No : 3

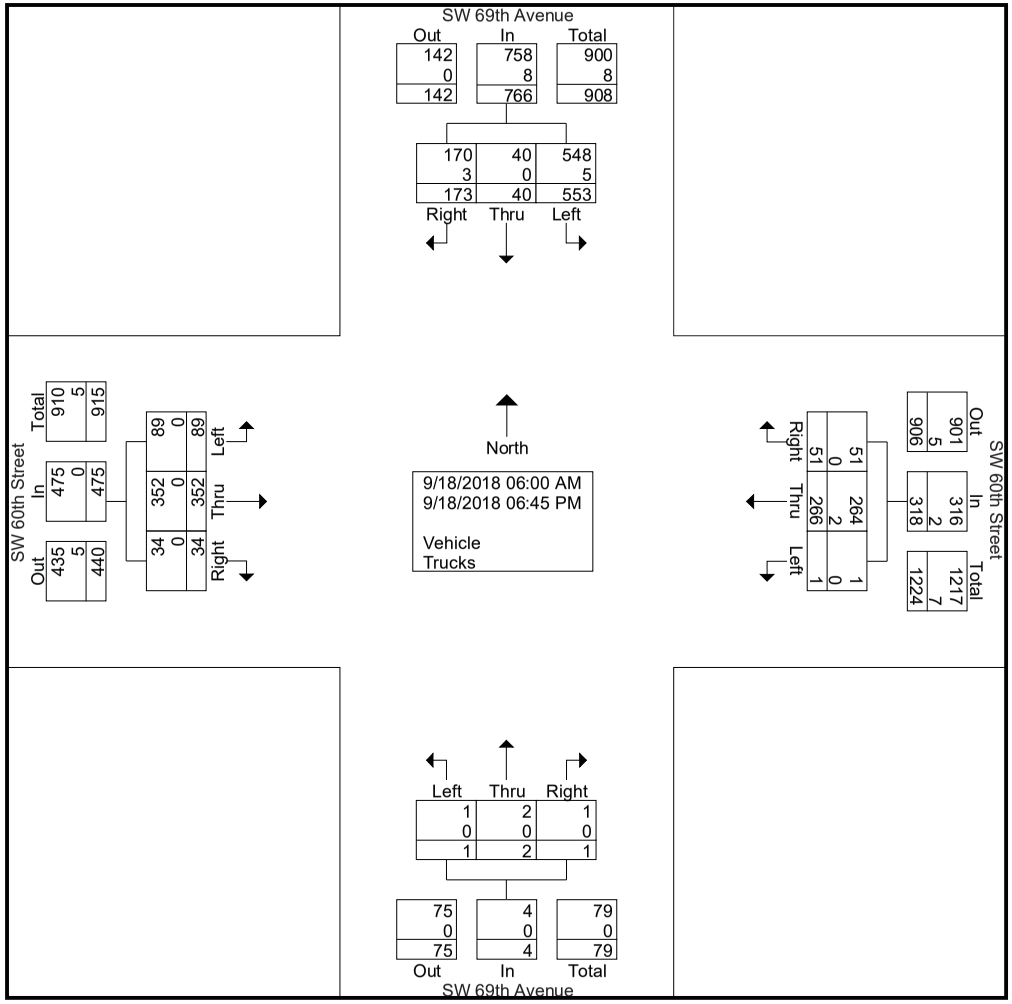

SW 60th Street & SW 69th Avenue

File Name : TMC-19 SW 60th Street & SW 69th Avenue
Site Code : 00000000
Start Date : 9/18/2018
Page No : 4

	SW 69th Avenue Southbound					SW 69th Avenue Northbound					SW 60th Street Westbound					SW 60th Street Eastbound					
Start Time	U-Turns	Left	Thru	Right	App. Total	U-Turns	Left	Thru	Right	App. Total	U-Turns	Left	Thru	Right	App. Total	U-Turns	Left	Thru	Right	App. Total	Int. Total
Peak Hour Analysis From 06:00 AM to 08:45 AM - Peak 1 of 1																					
Peak Hour for Entire Intersection Begins at 07:30 AM																					
07:30 AM	0	54	**12**	**4**	70	0	0	0	0	0	0	0	0	0	0	0	4	33	5	42	112
07:45 AM	0	**73**	8	2	**83**	0	0	**1**	0	**1**	0	0	**1**	0	**1**	0	**9**	**41**	8	**58**	**143**
08:00 AM	0	70	4	2	76	0	0	1	0	1	0	0	0	0	0	0	3	9	**9**	21	98
08:15 AM	0	59	6	2	67	0	**1**	0	0	1	0	0	0	0	0	0	5	36	4	45	113
Total Volume	0	256	30	10	296	0	1	2	0	3	0	0	1	0	1	0	21	119	26	166	466
% App. Total	0	86.5	10.1	3.4		0	33.3	66.7	0		0	0	100	0		0	12.7	71.7	15.7		
PHF	.000	.877	.625	.625	.892	.000	.250	.500	.000	.750	.000	.000	.250	.000	.250	.000	.583	.726	.722	.716	.815

SW 60th Street & SW 69th Avenue

File Name : TMC-19 SW 60th Street & SW 69th Avenue
Site Code : 00000000
Start Date : 9/18/2018
Page No : 5

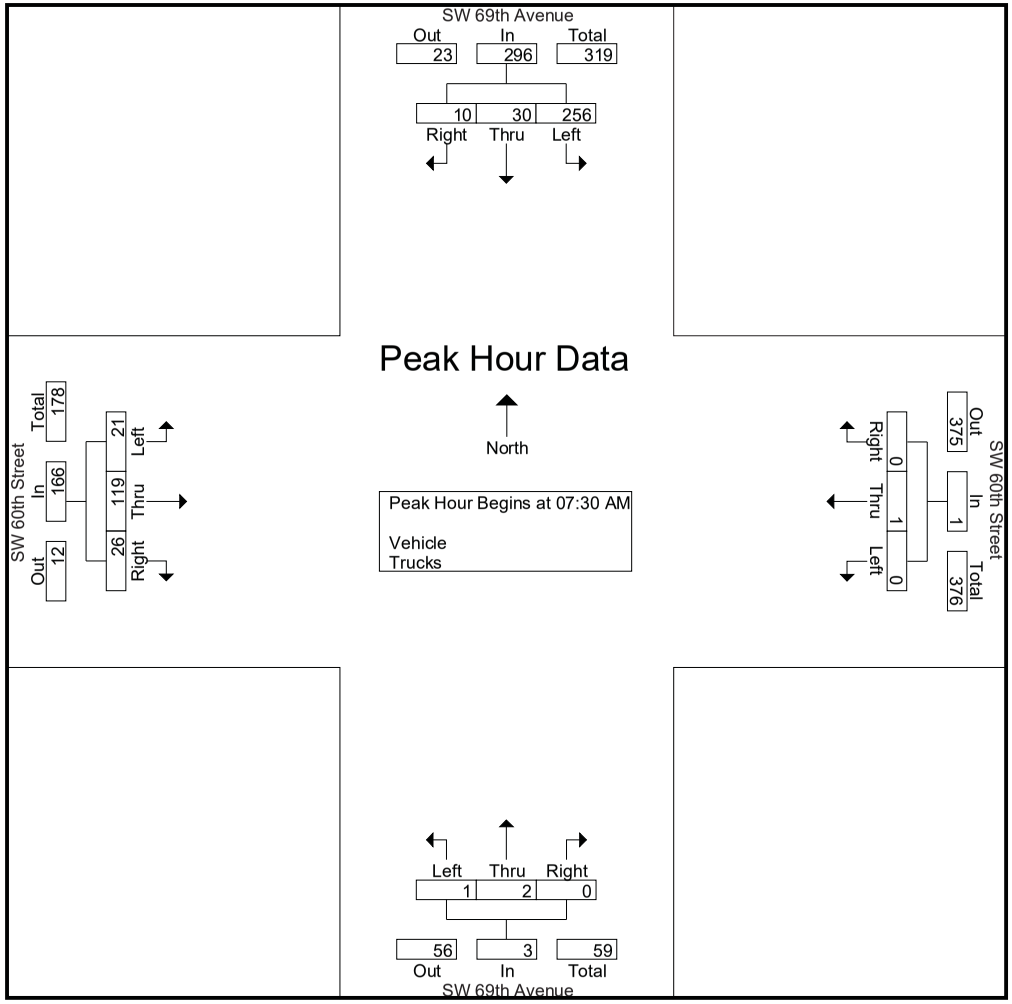

SW 60th Street & SW 69th Avenue

File Name : TMC-19 SW 60th Street & SW 69th Avenue
Site Code : 00000000
Start Date : 9/18/2018
Page No : 6

	SW 69th Avenue Southbound					SW 69th Avenue Northbound					SW 60th Street Westbound					SW 60th Street Eastbound					
Start Time	U-Turns	Left	Thru	Right	App. Total	U-Turns	Left	Thru	Right	App. Total	U-Turns	Left	Thru	Right	App. Total	U-Turns	Left	Thru	Right	App. Total	Int. Total
Peak Hour Analysis From 11:30 AM to 01:15 PM - Peak 1 of 1																					
Peak Hour for Entire Intersection Begins at 12:30 PM																					
12:30 PM	0	2	0	**2**	4	0	0	0	0	0	0	0	1	0	1	0	0	2	0	2	7
12:45 PM	0	3	0	2	5	0	0	0	0	0	0	0	1	**1**	2	0	0	4	0	4	11
01:00 PM	0	6	0	2	8	0	0	0	0	0	0	0	**3**	1	**4**	0	**1**	5	0	6	18
01:15 PM	0	**7**	0	2	**9**	0	0	0	0	0	0	0	3	1	4	0	1	**7**	0	**8**	**21**
Total Volume	0	18	0	8	26	0	0	0	0	0	0	0	8	3	11	0	2	18	0	20	57
% App. Total	0	69.2	0	30.8		0	0	0	0		0	0	72.7	27.3		0	10	90	0		
PHF	.000	.643	.000	1.00	.722	.000	.000	.000	.000	.000	.000	.000	.667	.750	.688	.000	.500	.643	.000	.625	.679

SW 60th Street & SW 69th Avenue

File Name : TMC-19 SW 60th Street & SW 69th Avenue
Site Code : 00000000
Start Date : 9/18/2018
Page No : 7

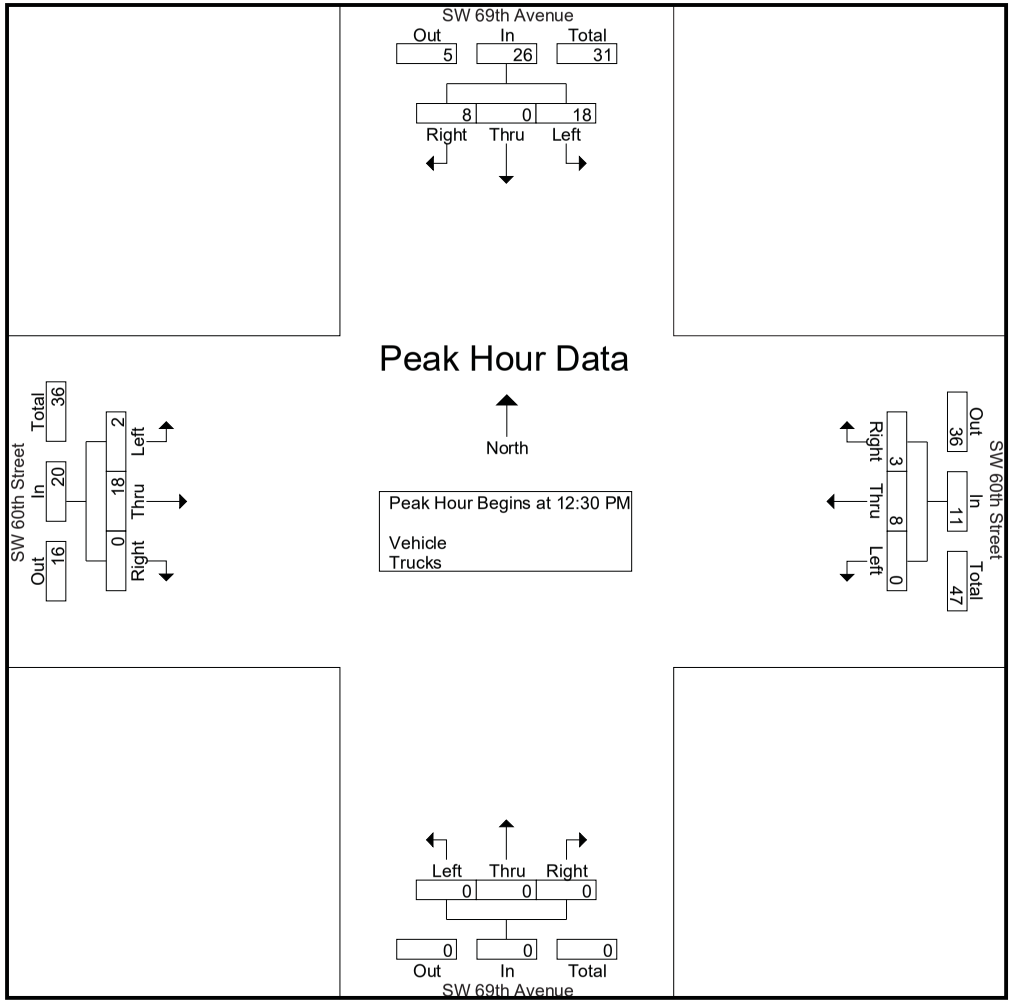

SW 60th Street & SW 69th Avenue

File Name : TMC-19 SW 60th Street & SW 69th Avenue
Site Code : 00000000
Start Date : 9/18/2018
Page No : 8

	SW 69th Avenue Southbound					SW 69th Avenue Northbound					SW 60th Street Westbound					SW 60th Street Eastbound					
Start Time	U-Turns	Left	Thru	Right	App. Total	U-Turns	Left	Thru	Right	App. Total	U-Turns	Left	Thru	Right	App. Total	U-Turns	Left	Thru	Right	App. Total	Int. Total
Peak Hour Analysis From 01:45 PM to 03:15 PM - Peak 1 of 1																					
Peak Hour for Entire Intersection Begins at 02:30 PM																					
02:30 PM	0	21	0	4	25	0	0	0	0	0	0	0	0	0	0	0	2	13	0	15	40
02:45 PM	0	24	0	9	33	0	0	0	0	0	0	0	1	0	1	0	1	5	0	6	40
03:00 PM	0	27	0	12	39	0	0	0	0	0	0	0	7	0	7	0	8	7	0	15	61
03:15 PM	0	**30**	0	**23**	**53**	0	0	0	0	0	0	0	**18**	**3**	**21**	0	**13**	**16**	0	**29**	**103**
Total Volume	0	102	0	48	150	0	0	0	0	0	0	0	26	3	29	0	24	41	0	65	244
% App. Total	0	68	0	32		0	0	0	0		0	0	89.7	10.3		0	36.9	63.1	0		
PHF	.000	.850	.000	.522	.708	.000	.000	.000	.000	.000	.000	.000	.361	.250	.345	.000	.462	.641	.000	.560	.592

Daily Eastbound Speeds (MPH)

Study Date: Tuesday, 09/18/2018
Unit ID: 0190
Location: W FLAGLER ST / W OF NW 69TH AVE

	0-5	5-10	10-15	15-20	20-25	25-30	30-35	35-40	40-45	45-50	50-55	55-60	60-65	65-70	70-75	Total
00:00 - 00:14	0	0	1	6	17	8	10	14	3	0	0	0	0	0	0	**59**
00:15 - 00:29	0	0	0	2	7	11	17	10	8	2	1	0	0	0	0	**58**
00:30 - 00:44	0	0	0	0	8	14	14	14	6	3	0	1	0	0	0	**60**
00:45 - 00:59	0	0	2	7	12	9	4	3	0	1	0	0	0	0	0	**38**
01:00 - 01:14	0	0	0	2	4	7	7	8	1	2	0	0	0	0	0	**31**
01:15 - 01:29	0	0	3	1	5	5	7	2	5	1	0	0	0	0	0	**29**
01:30 - 01:44	0	0	0	0	3	5	16	5	3	1	1	0	0	0	0	**34**
01:45 - 01:59	0	0	0	0	0	8	10	7	7	2	1	0	0	0	0	**35**
02:00 - 02:14	0	0	0	0	1	1	10	2	4	0	0	0	0	0	0	**18**
02:15 - 02:29	0	0	0	0	1	1	6	4	4	1	0	1	0	0	0	**18**
02:30 - 02:44	0	0	0	0	2	1	3	4	4	1	1	0	0	0	0	**16**
02:45 - 02:59	0	0	0	0	0	1	9	3	3	2	1	0	0	0	0	**19**
03:00 - 03:14	0	0	0	0	1	2	5	11	2	0	0	0	0	0	0	**21**
03:15 - 03:29	0	1	0	0	0	2	6	4	4	4	2	0	0	0	0	**23**
03:30 - 03:44	0	0	0	0	3	8	15	12	4	0	0	0	0	0	0	**42**
03:45 - 03:59	0	0	0	0	0	3	5	5	0	0	0	0	0	0	0	**13**
04:00 - 04:14	0	0	0	0	1	3	6	13	4	0	0	0	0	0	0	**27**
04:15 - 04:29	0	0	0	0	1	3	4	3	8	3	0	0	0	0	0	**22**
04:30 - 04:44	0	0	0	0	1	1	11	15	11	1	1	0	0	0	0	**41**
04:45 - 04:59	0	1	0	0	3	6	9	21	8	3	1	0	0	0	0	**52**
05:00 - 05:14	0	1	1	6	13	9	8	13	6	1	0	0	0	0	0	**58**
05:15 - 05:29	0	1	0	6	14	17	22	19	1	3	1	0	0	0	0	**84**
05:30 - 05:44	0	1	7	14	18	16	32	17	9	1	1	0	0	0	0	**116**
05:45 - 05:59	0	15	19	16	20	7	6	3	0	0	0	0	0	0	0	**86**
06:00 - 06:14	1	2	5	17	11	18	33	21	10	4	1	1	0	0	0	**124**
06:15 - 06:29	0	6	13	19	31	54	41	15	9	1	0	0	0	0	0	**189**
06:30 - 06:44	0	7	7	45	46	25	33	14	4	2	1	0	1	0	0	**185**
06:45 - 06:59	0	6	21	30	27	53	48	23	12	1	0	0	0	0	0	**221**
07:00 - 07:14	0	13	8	26	42	51	32	30	7	2	0	0	0	0	0	**211**
07:15 - 07:29	2	5	15	58	65	43	15	5	0	0	0	0	0	0	0	**208**
07:30 - 07:44	0	10	25	79	49	35	17	7	1	1	0	0	0	0	0	**224**
07:45 - 07:59	2	12	36	32	28	5	0	0	0	0	0	0	0	1	0	**116**
08:00 - 08:14	0	10	11	38	42	10	3	0	0	0	0	0	0	0	0	**114**
08:15 - 08:29	0	9	28	66	45	14	0	1	0	0	0	0	0	0	0	**163**
08:30 - 08:44	2	17	39	95	43	5	0	3	0	2	2	0	0	0	0	**208**
08:45 - 08:59	3	7	26	69	29	3	0	0	0	0	0	0	0	0	0	**137**
09:00 - 09:14	2	12	32	50	26	5	1	0	0	0	0	0	0	0	0	**128**
09:15 - 09:29	2	17	40	63	12	6	5	4	2	0	0	0	0	0	0	**151**
09:30 - 09:44	6	19	27	51	12	3	0	1	0	0	0	1	0	0	0	**120**
09:45 - 09:59	0	1	20	52	77	38	33	11	2	1	0	0	0	0	0	**235**
10:00 - 10:14	1	2	20	71	71	35	21	5	1	1	0	0	0	0	0	**228**
10:15 - 10:29	0	9	13	47	56	45	21	8	0	0	0	0	0	0	0	**199**
10:30 - 10:44	1	3	9	34	39	54	40	18	2	0	0	0	0	0	0	**200**
10:45 - 10:59	1	4	29	61	60	45	21	7	0	0	0	0	0	0	0	**228**
11:00 - 11:14	1	3	10	28	66	37	26	11	2	4	0	0	0	0	0	**188**
11:15 - 11:29	0	3	24	53	35	28	14	10	6	3	0	0	0	0	0	**176**
11:30 - 11:44	1	5	17	80	54	21	12	6	3	0	0	0	0	0	0	**199**
11:45 - 11:59	0	6	13	57	45	32	24	10	3	1	0	0	0	0	0	**191**
12:00 - 12:14	0	11	14	35	75	49	24	14	5	1	0	0	0	0	0	**228**
12:15 - 12:29	0	7	15	66	59	29	17	5	4	0	0	0	0	0	0	**202**
12:30 - 12:44	0	1	32	54	56	38	15	13	2	0	0	0	0	0	0	**211**

Printed: 09/22/2018 at 10:28
TrafficViewer Pro v1.6.4.124
PicoCount 2500 V2.37 (s/n# 17032243)

Daily Eastbound Speeds (MPH)

Study Date: Tuesday, 09/18/2018
Unit ID: 0190
Location: W FLAGLER ST / W OF NW 69TH AVE

	0-5	5-10	10-15	15-20	20-25	25-30	30-35	35-40	40-45	45-50	50-55	55-60	60-65	65-70	70-75	Total
12:45 - 12:59	2	5	30	40	48	29	19	7	4	1	0	0	0	0	0	**185**
13:00 - 13:14	0	6	17	41	47	32	17	5	2	3	0	0	0	0	0	**170**
13:15 - 13:29	1	6	23	40	23	33	39	8	3	0	0	0	0	0	0	**176**
13:30 - 13:44	0	4	29	59	64	21	23	11	2	0	0	0	0	0	0	**213**
13:45 - 13:59	0	2	11	28	48	68	43	25	7	1	0	0	0	0	0	**233**
14:00 - 14:14	1	6	23	22	33	65	39	14	3	1	0	0	1	0	0	**208**
14:15 - 14:29	0	0	3	19	78	82	53	15	3	0	0	0	0	0	0	**253**
14:30 - 14:44	0	2	8	21	65	48	53	18	3	2	0	0	0	0	0	**220**
14:45 - 14:59	0	3	9	23	69	62	54	11	2	0	0	0	0	0	0	**233**
15:00 - 15:14	1	1	9	46	76	81	24	9	3	0	0	0	1	0	0	**251**
15:15 - 15:29	0	5	27	34	67	35	32	10	4	2	0	0	0	0	0	**216**
15:30 - 15:44	4	1	8	34	62	55	33	10	2	0	0	0	0	0	0	**209**
15:45 - 15:59	0	6	14	33	78	102	28	10	3	0	1	0	0	0	0	**275**
16:00 - 16:14	0	1	5	13	85	110	63	18	1	1	0	0	0	0	0	**297**
16:15 - 16:29	0	6	12	29	67	100	20	8	2	0	0	0	0	0	2	**246**
16:30 - 16:44	0	1	21	53	79	54	55	12	1	0	0	0	0	0	0	**276**
16:45 - 16:59	1	2	14	34	74	77	39	15	4	1	0	0	0	0	0	**261**
17:00 - 17:14	0	6	22	54	82	62	25	11	3	0	2	0	0	0	0	**267**
17:15 - 17:29	2	4	19	50	94	30	28	5	3	0	0	0	0	0	0	**235**
17:30 - 17:44	0	3	10	31	95	101	34	12	6	3	0	0	0	0	0	**295**
17:45 - 17:59	3	8	14	33	97	87	39	10	3	1	0	0	0	0	0	**295**
18:00 - 18:14	0	1	6	12	89	127	70	9	10	0	1	0	0	0	0	**325**
18:15 - 18:29	0	1	8	20	53	78	78	28	4	4	0	0	0	0	0	**274**
18:30 - 18:44	0	0	13	20	50	82	67	34	12	4	0	0	0	0	0	**282**
18:45 - 18:59	0	1	6	32	94	108	49	14	4	1	0	0	0	0	0	**309**
19:00 - 19:14	0	1	2	11	48	70	55	28	4	1	0	0	0	0	0	**220**
19:15 - 19:29	0	0	1	13	69	84	50	31	8	2	1	0	0	0	0	**259**
19:30 - 19:44	0	1	6	38	60	59	32	7	3	2	0	0	0	0	0	**208**
19:45 - 19:59	0	3	11	22	57	66	53	16	2	2	0	0	0	0	0	**232**
20:00 - 20:14	0	2	2	27	73	56	34	13	3	2	0	0	0	0	0	**212**
20:15 - 20:29	0	6	16	60	32	34	28	20	4	2	0	0	0	0	0	**202**
20:30 - 20:44	0	4	20	28	27	38	40	19	3	1	1	0	0	0	0	**181**
20:45 - 20:59	1	8	8	20	24	22	22	13	5	1	0	0	0	0	0	**124**
21:00 - 21:14	1	7	13	15	21	41	36	19	9	1	0	0	1	0	0	**164**
21:15 - 21:29	1	7	14	22	25	35	27	20	4	0	0	0	0	0	0	**155**
21:30 - 21:44	0	3	8	32	55	23	21	11	4	1	0	0	0	0	0	**158**
21:45 - 21:59	0	6	18	28	39	21	25	5	6	2	1	1	0	0	0	**152**
22:00 - 22:14	0	1	1	6	20	49	53	25	11	1	0	0	0	0	0	**167**
22:15 - 22:29	0	0	1	15	28	43	55	20	8	2	0	0	0	0	0	**172**
22:30 - 22:44	0	1	5	18	18	40	31	23	13	4	0	0	0	0	0	**153**
22:45 - 22:59	0	0	1	9	22	23	25	22	6	4	1	0	0	0	0	**113**
23:00 - 23:14	0	0	0	4	17	32	23	12	2	3	0	0	0	0	0	**93**
23:15 - 23:29	0	1	4	11	14	10	25	15	6	3	0	0	0	0	0	**89**
23:30 - 23:44	0	0	1	4	17	19	15	15	9	1	0	0	0	0	0	**81**
23:45 - 23:59	0	0	0	8	9	17	16	13	6	3	0	0	0	0	0	**72**
Totals	**43**	**359**	**1075**	**2648**	**3728**	**3440**	**2428**	**1130**	**390**	**119**	**23**	**5**	**4**	**1**	**2**	**15395**
Percent of Total	**0.3**	**2.3**	**7.0**	**17.2**	**24.2**	**22.3**	**15.8**	**7.3**	**2.5**	**0.8**	**0.1**	**0.0**	**0.0**	**0.0**	**0.0**	**100**
Percent of AM	**0.5**	**3.9**	**9.8**	**24.0**	**21.4**	**15.2**	**12.8**	**7.9**	**3.2**	**1.0**	**0.3**	**0.1**	**0.0**	**0.0**	**0.0**	**100**
Percent of PM	**0.2**	**1.5**	**5.5**	**13.6**	**25.7**	**26.1**	**17.4**	**7.0**	**2.2**	**0.6**	**0.1**	**0.0**	**0.0**	**0.0**	**0.0**	**100**

SW 60th Street & SW 69th Avenue

File Name : TMC-19 SW 60th Street & SW 69th Avenue
Site Code : 00000000
Start Date : 9/18/2018
Page No : 9

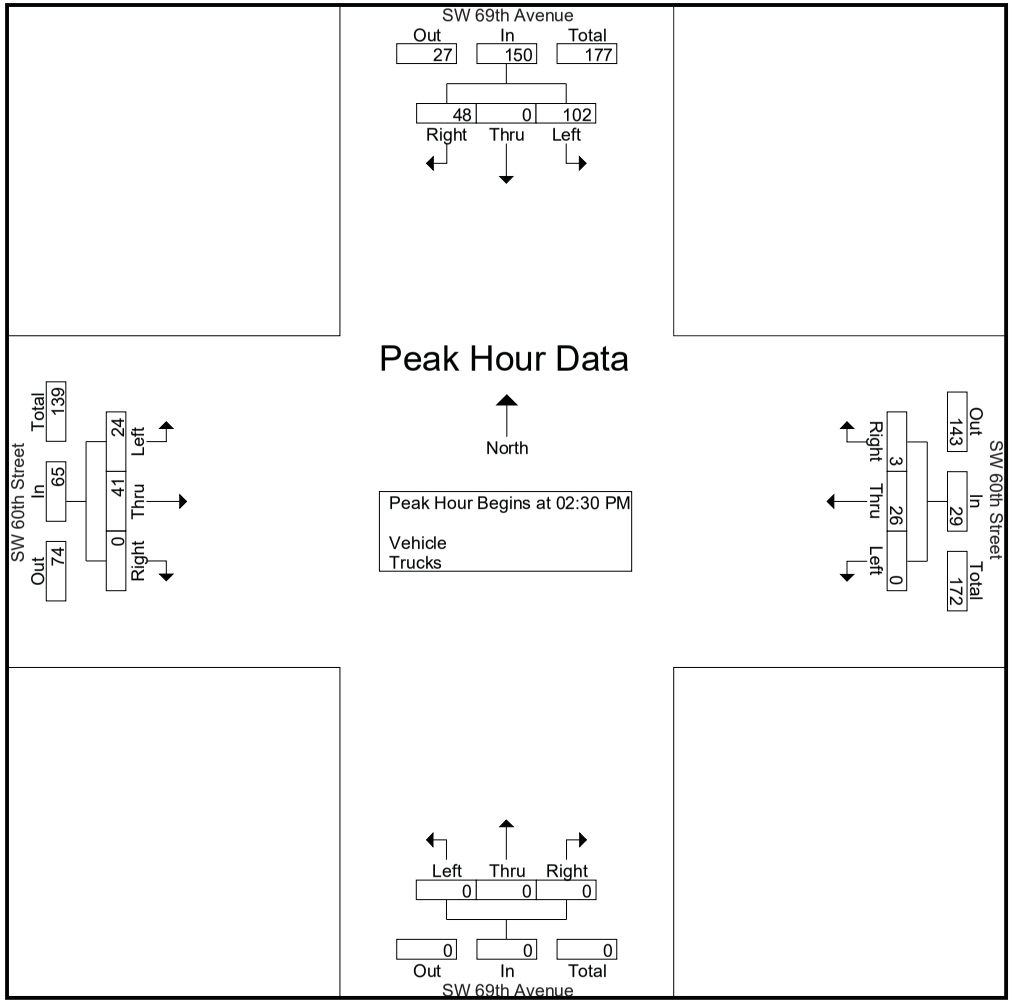

SW 60th Street & SW 69th Avenue

File Name : TMC-19 SW 60th Street & SW 69th Avenue
Site Code : 00000000
Start Date : 9/18/2018
Page No : 10

	SW 69th Avenue Southbound					SW 69th Avenue Northbound					SW 60th Street Westbound					SW 60th Street Eastbound					
Start Time	U-Turns	Left	Thru	Right	App. Total	U-Turns	Left	Thru	Right	App. Total	U-Turns	Left	Thru	Right	App. Total	U-Turns	Left	Thru	Right	App. Total	Int. Total
Peak Hour Analysis From 04:00 PM to 06:45 PM - Peak 1 of 1																					
Peak Hour for Entire Intersection Begins at 05:00 PM																					
05:00 PM	0	**7**	0	2	9	0	0	0	0	0	0	0	19	7	26	0	**2**	7	0	9	44
05:15 PM	0	6	0	8	14	0	0	0	0	0	0	0	**35**	**11**	**46**	0	2	5	0	7	**67**
05:30 PM	0	7	0	**14**	**21**	0	0	0	0	0	0	0	26	8	34	0	1	**9**	0	**10**	65
05:45 PM	0	7	0	14	21	0	0	0	0	0	0	0	26	5	31	0	2	5	0	7	59
Total Volume	0	27	0	38	65	0	0	0	0	0	0	0	106	31	137	0	7	26	0	33	235
% App. Total	0	41.5	0	58.5		0	0	0	0		0	0	77.4	22.6		0	21.2	78.8	0		
PHF	.000	.964	.000	.679	.774	.000	.000	.000	.000	.000	.000	.000	.757	.705	.745	.000	.875	.722	.000	.825	.877

SW 60th Street & SW 69th Avenue

File Name : TMC-19 SW 60th Street & SW 69th Avenue
Site Code : 00000000
Start Date : 9/18/2018
Page No : 11

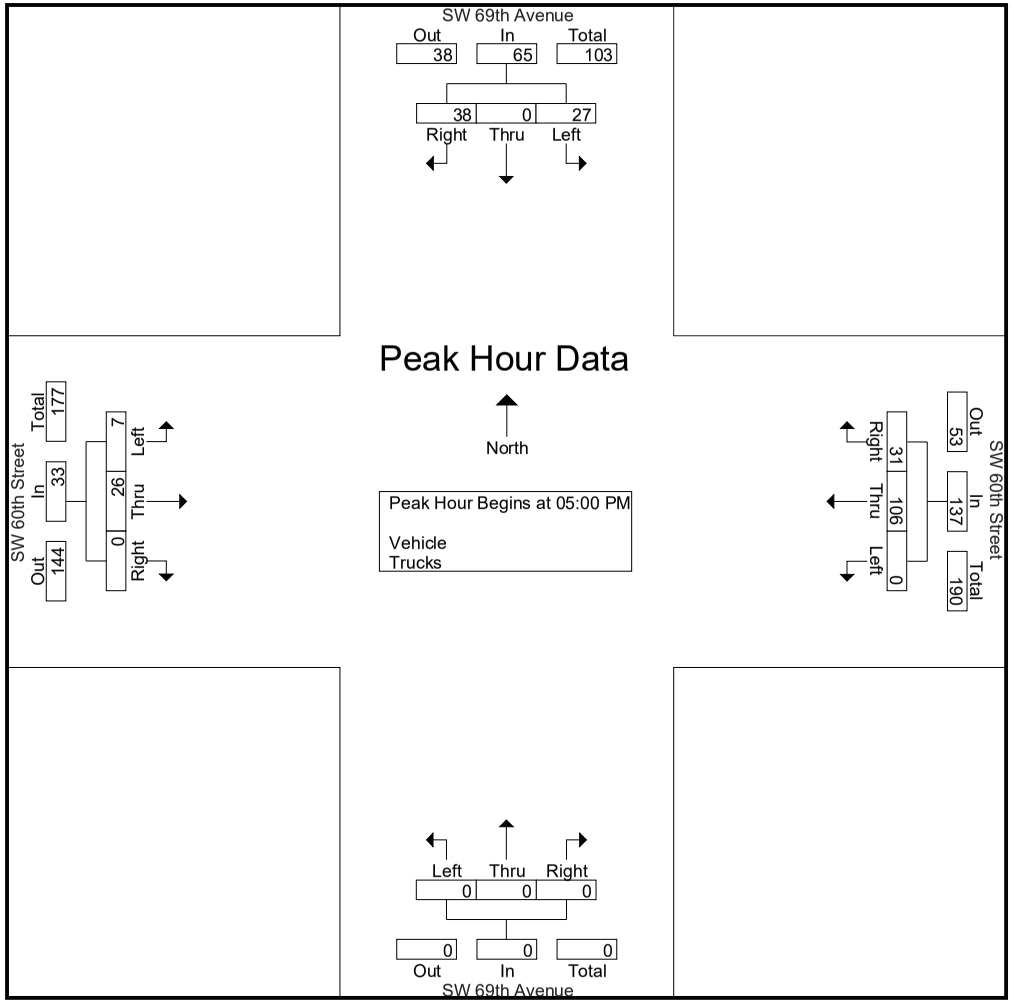

Speed Data

Daily Eastbound Speeds (MPH)

Study Date: Tuesday, 09/18/2018
Unit ID: 0190
Location: W FLAGLER ST / W OF NW 69TH AVE

	0-5	5-10	10-15	15-20	20-25	25-30	30-35	35-40	40-45	45-50	50-55	55-60	60-65	65-70	70-75	Total
00:00 - 00:14	0	0	1	6	17	8	10	14	3	0	0	0	0	0	0	**59**
00:15 - 00:29	0	0	0	2	7	11	17	10	8	2	1	0	0	0	0	**58**
00:30 - 00:44	0	0	0	0	8	14	14	14	6	3	0	1	0	0	0	**60**
00:45 - 00:59	0	0	2	7	12	9	4	3	0	1	0	0	0	0	0	**38**
01:00 - 01:14	0	0	0	2	4	7	7	8	1	2	0	0	0	0	0	**31**
01:15 - 01:29	0	0	3	1	5	5	7	2	5	1	0	0	0	0	0	**29**
01:30 - 01:44	0	0	0	0	3	5	16	5	3	1	1	0	0	0	0	**34**
01:45 - 01:59	0	0	0	0	0	8	10	7	7	2	1	0	0	0	0	**35**
02:00 - 02:14	0	0	0	0	1	1	10	2	4	0	0	0	0	0	0	**18**
02:15 - 02:29	0	0	0	0	1	1	6	4	4	1	0	1	0	0	0	**18**
02:30 - 02:44	0	0	0	0	2	1	3	4	4	1	1	0	0	0	0	**16**
02:45 - 02:59	0	0	0	0	0	1	9	3	3	2	1	0	0	0	0	**19**
03:00 - 03:14	0	0	0	0	1	2	5	11	2	0	0	0	0	0	0	**21**
03:15 - 03:29	0	1	0	0	0	2	6	4	4	4	2	0	0	0	0	**23**
03:30 - 03:44	0	0	0	0	3	8	15	12	4	0	0	0	0	0	0	**42**
03:45 - 03:59	0	0	0	0	0	3	5	5	0	0	0	0	0	0	0	**13**
04:00 - 04:14	0	0	0	0	1	3	6	13	4	0	0	0	0	0	0	**27**
04:15 - 04:29	0	0	0	0	1	3	4	3	8	3	0	0	0	0	0	**22**
04:30 - 04:44	0	0	0	0	1	1	11	15	11	1	1	0	0	0	0	**41**
04:45 - 04:59	0	1	0	0	3	6	9	21	8	3	1	0	0	0	0	**52**
05:00 - 05:14	0	1	1	6	13	9	8	13	6	1	0	0	0	0	0	**58**
05:15 - 05:29	0	1	0	6	14	17	22	19	1	3	1	0	0	0	0	**84**
05:30 - 05:44	0	1	7	14	18	16	32	17	9	1	1	0	0	0	0	**116**
05:45 - 05:59	0	15	19	16	20	7	6	3	0	0	0	0	0	0	0	**86**
06:00 - 06:14	1	2	5	17	11	18	33	21	10	4	1	1	0	0	0	**124**
06:15 - 06:29	0	6	13	19	31	54	41	15	9	1	0	0	0	0	0	**189**
06:30 - 06:44	0	7	7	45	46	25	33	14	4	2	1	0	1	0	0	**185**
06:45 - 06:59	0	6	21	30	27	53	48	23	12	1	0	0	0	0	0	**221**
07:00 - 07:14	0	13	8	26	42	51	32	30	7	2	0	0	0	0	0	**211**
07:15 - 07:29	2	5	15	58	65	43	15	5	0	0	0	0	0	0	0	**208**
07:30 - 07:44	0	10	25	79	49	35	17	7	1	1	0	0	0	0	0	**224**
07:45 - 07:59	2	12	36	32	28	5	0	0	0	0	0	0	0	1	0	**116**
08:00 - 08:14	0	10	11	38	42	10	3	0	0	0	0	0	0	0	0	**114**
08:15 - 08:29	0	9	28	66	45	14	0	1	0	0	0	0	0	0	0	**163**
08:30 - 08:44	2	17	39	95	43	5	0	3	0	2	2	0	0	0	0	**208**
08:45 - 08:59	3	7	26	69	29	3	0	0	0	0	0	0	0	0	0	**137**
09:00 - 09:14	2	12	32	50	26	5	1	0	0	0	0	0	0	0	0	**128**
09:15 - 09:29	2	17	40	63	12	6	5	4	2	0	0	0	0	0	0	**151**
09:30 - 09:44	6	19	27	51	12	3	0	1	0	0	0	1	0	0	0	**120**
09:45 - 09:59	0	1	20	52	77	38	33	11	2	1	0	0	0	0	0	**235**
10:00 - 10:14	1	2	20	71	71	35	21	5	1	1	0	0	0	0	0	**228**
10:15 - 10:29	0	9	13	47	56	45	21	8	0	0	0	0	0	0	0	**199**
10:30 - 10:44	1	3	9	34	39	54	40	18	2	0	0	0	0	0	0	**200**
10:45 - 10:59	1	4	29	61	60	45	21	7	0	0	0	0	0	0	0	**228**
11:00 - 11:14	1	3	10	28	66	37	26	11	2	4	0	0	0	0	0	**188**
11:15 - 11:29	0	3	24	53	35	28	14	10	6	3	0	0	0	0	0	**176**
11:30 - 11:44	1	5	17	80	54	21	12	6	3	0	0	0	0	0	0	**199**
11:45 - 11:59	0	6	13	57	45	32	24	10	3	1	0	0	0	0	0	**191**
12:00 - 12:14	0	11	14	35	75	49	24	14	5	1	0	0	0	0	0	**228**
12:15 - 12:29	0	7	15	66	59	29	17	5	4	0	0	0	0	0	0	**202**
12:30 - 12:44	0	1	32	54	56	38	15	13	2	0	0	0	0	0	0	**211**

Printed: 09/22/2018 at 10:28
TrafficViewer Pro v1.6.4.124
PicoCount 2500 V2.37 (s/n# 17032243)

Daily Eastbound Speeds (MPH)

Study Date: Tuesday, 09/18/2018
Unit ID: 0190
Location: W FLAGLER ST / W OF NW 69TH AVE

	0-5	5-10	10-15	15-20	20-25	25-30	30-35	35-40	40-45	45-50	50-55	55-60	60-65	65-70	70-75	Total
12:45 - 12:59	2	5	30	40	48	29	19	7	4	1	0	0	0	0	0	**185**
13:00 - 13:14	0	6	17	41	47	32	17	5	2	3	0	0	0	0	0	**170**
13:15 - 13:29	1	6	23	40	23	33	39	8	3	0	0	0	0	0	0	**176**
13:30 - 13:44	0	4	29	59	64	21	23	11	2	0	0	0	0	0	0	**213**
13:45 - 13:59	0	2	11	28	48	68	43	25	7	1	0	0	0	0	0	**233**
14:00 - 14:14	1	6	23	22	33	65	39	14	3	1	0	0	1	0	0	**208**
14:15 - 14:29	0	0	3	19	78	82	53	15	3	0	0	0	0	0	0	**253**
14:30 - 14:44	0	2	8	21	65	48	53	18	3	2	0	0	0	0	0	**220**
14:45 - 14:59	0	3	9	23	69	62	54	11	2	0	0	0	0	0	0	**233**
15:00 - 15:14	1	1	9	46	76	81	24	9	3	0	0	0	1	0	0	**251**
15:15 - 15:29	0	5	27	34	67	35	32	10	4	2	0	0	0	0	0	**216**
15:30 - 15:44	4	1	8	34	62	55	33	10	2	0	0	0	0	0	0	**209**
15:45 - 15:59	0	6	14	33	78	102	28	10	3	0	1	0	0	0	0	**275**
16:00 - 16:14	0	1	5	13	85	110	63	18	1	1	0	0	0	0	0	**297**
16:15 - 16:29	0	6	12	29	67	100	20	8	2	0	0	0	0	0	2	**246**
16:30 - 16:44	0	1	21	53	79	54	55	12	1	0	0	0	0	0	0	**276**
16:45 - 16:59	1	2	14	34	74	77	39	15	4	1	0	0	0	0	0	**261**
17:00 - 17:14	0	6	22	54	82	62	25	11	3	0	2	0	0	0	0	**267**
17:15 - 17:29	2	4	19	50	94	30	28	5	3	0	0	0	0	0	0	**235**
17:30 - 17:44	0	3	10	31	95	101	34	12	6	3	0	0	0	0	0	**295**
17:45 - 17:59	3	8	14	33	97	87	39	10	3	1	0	0	0	0	0	**295**
18:00 - 18:14	0	1	6	12	89	127	70	9	10	0	1	0	0	0	0	**325**
18:15 - 18:29	0	1	8	20	53	78	78	28	4	4	0	0	0	0	0	**274**
18:30 - 18:44	0	0	13	20	50	82	67	34	12	4	0	0	0	0	0	**282**
18:45 - 18:59	0	1	6	32	94	108	49	14	4	1	0	0	0	0	0	**309**
19:00 - 19:14	0	1	2	11	48	70	55	28	4	1	0	0	0	0	0	**220**
19:15 - 19:29	0	0	1	13	69	84	50	31	8	2	1	0	0	0	0	**259**
19:30 - 19:44	0	1	6	38	60	59	32	7	3	2	0	0	0	0	0	**208**
19:45 - 19:59	0	3	11	22	57	66	53	16	2	2	0	0	0	0	0	**232**
20:00 - 20:14	0	2	2	27	73	56	34	13	3	2	0	0	0	0	0	**212**
20:15 - 20:29	0	6	16	60	32	34	28	20	4	2	0	0	0	0	0	**202**
20:30 - 20:44	0	4	20	28	27	38	40	19	3	1	1	0	0	0	0	**181**
20:45 - 20:59	1	8	8	20	24	22	22	13	5	1	0	0	0	0	0	**124**
21:00 - 21:14	1	7	13	15	21	41	36	19	9	1	0	0	1	0	0	**164**
21:15 - 21:29	1	7	14	22	25	35	27	20	4	0	0	0	0	0	0	**155**
21:30 - 21:44	0	3	8	32	55	23	21	11	4	1	0	0	0	0	0	**158**
21:45 - 21:59	0	6	18	28	39	21	25	5	6	2	1	1	0	0	0	**152**
22:00 - 22:14	0	1	1	6	20	49	53	25	11	1	0	0	0	0	0	**167**
22:15 - 22:29	0	0	1	15	28	43	55	20	8	2	0	0	0	0	0	**172**
22:30 - 22:44	0	1	5	18	18	40	31	23	13	4	0	0	0	0	0	**153**
22:45 - 22:59	0	0	1	9	22	23	25	22	6	4	1	0	0	0	0	**113**
23:00 - 23:14	0	0	0	4	17	32	23	12	2	3	0	0	0	0	0	**93**
23:15 - 23:29	0	1	4	11	14	10	25	15	6	3	0	0	0	0	0	**89**
23:30 - 23:44	0	0	1	4	17	19	15	15	9	1	0	0	0	0	0	**81**
23:45 - 23:59	0	0	0	8	9	17	16	13	6	3	0	0	0	0	0	**72**
Totals	**43**	**359**	**1075**	**2648**	**3728**	**3440**	**2428**	**1130**	**390**	**119**	**23**	**5**	**4**	**1**	**2**	**15395**
Percent of Total	**0.3**	**2.3**	**7.0**	**17.2**	**24.2**	**22.3**	**15.8**	**7.3**	**2.5**	**0.8**	**0.1**	**0.0**	**0.0**	**0.0**	**0.0**	**100**
Percent of AM	**0.5**	**3.9**	**9.8**	**24.0**	**21.4**	**15.2**	**12.8**	**7.9**	**3.2**	**1.0**	**0.3**	**0.1**	**0.0**	**0.0**	**0.0**	**100**
Percent of PM	**0.2**	**1.5**	**5.5**	**13.6**	**25.7**	**26.1**	**17.4**	**7.0**	**2.2**	**0.6**	**0.1**	**0.0**	**0.0**	**0.0**	**0.0**	**100**

Daily Eastbound Speeds (MPH)

Study Date: Tuesday, 09/18/2018
Unit ID: 0190
Location: W FLAGLER ST / W OF NW 69TH AVE

Standard Deviation:	8.3 MPH	Ten Mile Pace:	20 to 29 MPH	85th Percentile:	34.4 MPH
Mean Speed:	25.6 MPH	Percent in Ten Mile Pace:	46.6%	15th Percentile:	16.9 MPH
Median Speed:	25.7 MPH			90th Percentile:	35.7 MPH
Modal Speed:	23.0 MPH			95th Percentile:	39.8 MPH

Daily Eastbound Speeds (MPH)

Study Date: Wednesday, 09/19/2018
Unit ID: 0190
Location: W FLAGLER ST / W OF NW 69TH AVE

	0-5	5-10	10-15	15-20	20-25	25-30	30-35	35-40	40-45	45-50	50-55	55-60	60-65	65-70	70-75	Total
00:00 - 00:14	0	0	0	4	6	16	12	19	7	3	1	0	0	0	0	**68**
00:15 - 00:29	0	1	0	1	6	9	16	11	7	0	0	0	0	0	0	**51**
00:30 - 00:44	0	0	0	4	8	8	7	5	4	0	0	0	0	0	0	**36**
00:45 - 00:59	0	0	2	5	8	10	9	7	5	0	0	0	0	0	0	**46**
01:00 - 01:14	0	0	0	1	8	8	11	3	1	1	1	0	0	0	0	**34**
01:15 - 01:29	0	0	4	0	7	6	6	2	1	0	0	0	0	0	0	**26**
01:30 - 01:44	0	0	0	1	6	8	5	7	6	0	0	0	0	0	0	**33**
01:45 - 01:59	0	0	0	0	1	7	6	10	3	2	0	0	0	0	0	**29**
02:00 - 02:14	0	0	0	0	4	2	5	5	4	1	0	0	0	0	0	**21**
02:15 - 02:29	1	0	0	1	0	1	16	3	4	0	1	0	0	0	0	**27**
02:30 - 02:44	0	0	0	0	1	1	5	4	4	0	0	0	0	0	0	**15**
02:45 - 02:59	0	0	0	0	2	2	7	4	5	1	0	0	0	0	0	**21**
03:00 - 03:14	0	0	0	0	2	7	10	2	3	0	0	0	0	0	0	**24**
03:15 - 03:29	0	1	0	0	2	5	6	8	6	1	1	0	0	0	0	**30**
03:30 - 03:44	0	0	0	0	1	2	7	11	3	0	0	0	0	0	0	**24**
03:45 - 03:59	0	0	0	0	1	5	6	8	2	1	0	0	0	0	0	**23**
04:00 - 04:14	0	0	0	0	1	4	5	14	1	3	1	0	0	0	0	**29**
04:15 - 04:29	0	0	0	0	0	5	5	12	9	3	0	0	0	0	0	**34**
04:30 - 04:44	0	0	0	1	3	7	13	13	10	3	0	0	0	0	0	**50**
04:45 - 04:59	0	0	0	1	1	5	9	11	10	4	1	0	0	0	0	**42**
05:00 - 05:14	0	0	2	0	8	9	13	5	12	0	0	0	0	0	0	**49**
05:15 - 05:29	0	0	0	4	13	10	13	16	13	1	0	0	0	0	0	**70**
05:30 - 05:44	0	3	4	2	22	13	15	26	11	5	2	0	0	0	0	**103**
05:45 - 05:59	0	2	0	8	17	17	29	30	14	3	2	0	0	0	0	**122**
06:00 - 06:14	0	3	4	8	20	34	34	20	12	4	2	0	0	0	0	**141**
06:15 - 06:29	3	5	8	10	31	55	41	22	12	4	0	0	0	0	0	**191**
06:30 - 06:44	0	7	16	19	36	45	40	23	7	3	0	1	0	0	0	**197**
06:45 - 06:59	1	10	14	27	21	39	34	32	12	4	0	0	0	0	0	**194**
07:00 - 07:14	1	9	13	45	20	41	38	20	6	3	0	0	0	0	0	**196**
07:15 - 07:29	1	5	26	57	46	22	5	2	2	0	0	0	0	0	0	**166**
07:30 - 07:44	2	9	25	46	44	19	1	0	0	0	0	0	0	0	0	**146**
07:45 - 07:59	0	14	13	65	58	20	7	3	0	0	0	0	0	0	0	**180**
08:00 - 08:14	1	7	25	62	61	25	6	3	1	0	0	0	0	0	1	**192**
08:15 - 08:29	0	13	28	70	73	1	0	0	0	0	1	0	0	0	0	**186**
08:30 - 08:44	0	16	30	75	39	3	0	1	0	0	0	0	1	1	0	**166**
08:45 - 08:59	1	11	27	66	73	20	18	2	1	0	0	0	0	0	0	**219**
09:00 - 09:14	2	6	33	50	38	55	39	17	7	0	0	0	0	0	0	**247**
09:15 - 09:29	0	6	33	57	40	26	31	9	3	0	0	0	0	0	0	**205**
09:30 - 09:44	1	10	15	47	52	36	34	4	3	0	0	0	0	0	0	**202**
09:45 - 09:59	1	10	20	49	57	36	14	7	0	0	0	0	0	0	0	**194**
10:00 - 10:14	2	10	16	55	86	42	9	8	1	0	0	0	1	0	0	**230**
10:15 - 10:29	0	7	17	38	42	33	21	7	1	0	0	0	0	0	0	**166**
10:30 - 10:44	1	12	29	46	25	11	15	7	1	2	1	0	0	0	0	**150**
10:45 - 10:59	1	7	20	58	93	38	23	5	2	0	0	0	0	0	0	**247**
11:00 - 11:14	1	10	23	58	63	27	12	6	0	0	0	0	0	0	0	**200**
11:15 - 11:29	1	8	21	62	41	18	29	10	4	0	1	0	0	0	0	**195**
11:30 - 11:44	0	6	21	50	71	42	33	8	3	0	0	0	0	0	0	**234**
11:45 - 11:59	0	11	26	53	32	47	17	5	1	1	0	0	0	0	0	**193**
12:00 - 12:14	0	7	14	48	47	29	19	4	5	0	0	0	0	0	0	**173**
12:15 - 12:29	0	7	25	48	59	33	13	10	3	1	0	0	0	0	0	**199**
12:30 - 12:44	2	7	34	72	51	28	15	7	2	0	0	0	0	0	0	**218**

Daily Eastbound Speeds (MPH)

Study Date: Wednesday, 09/19/2018
Unit ID: 0190
Location: W FLAGLER ST / W OF NW 69TH AVE

	0-5	5-10	10-15	15-20	20-25	25-30	30-35	35-40	40-45	45-50	50-55	55-60	60-65	65-70	70-75	Total
12:45 - 12:59	0	6	36	33	15	15	10	3	0	0	0	0	0	0	0	**118**
13:00 - 13:14	0	8	27	65	36	19	27	12	5	0	0	0	0	1	0	**200**
13:15 - 13:29	2	6	25	71	59	30	14	7	0	0	0	0	0	0	0	**214**
13:30 - 13:44	0	5	20	46	57	33	20	16	0	0	0	0	0	0	0	**197**
13:45 - 13:59	0	8	9	25	48	61	38	12	1	1	0	0	0	0	0	**203**
14:00 - 14:14	1	11	11	38	70	74	18	11	4	1	0	0	0	0	0	**239**
14:15 - 14:29	2	8	37	35	38	75	16	4	1	1	0	0	0	1	0	**218**
14:30 - 14:44	8	12	33	50	8	4	0	0	0	0	0	1	0	0	0	**116**
14:45 - 14:59	2	13	24	37	24	9	10	1	4	0	0	0	0	0	0	**124**
15:00 - 15:14	0	5	23	40	43	79	44	8	3	0	0	0	0	0	0	**245**
15:15 - 15:29	0	18	35	43	31	3	3	0	0	0	0	0	0	0	0	**133**
15:30 - 15:44	0	2	16	22	53	95	42	18	1	0	0	0	0	0	0	**249**
15:45 - 15:59	0	3	9	34	98	46	46	16	5	0	0	0	0	0	0	**257**
16:00 - 16:14	0	4	8	27	90	100	45	12	1	1	0	0	0	0	0	**288**
16:15 - 16:29	0	3	8	18	72	124	55	26	1	1	0	0	0	0	0	**308**
16:30 - 16:44	0	4	7	9	80	87	68	23	5	1	0	0	0	0	0	**284**
16:45 - 16:59	0	1	9	62	82	47	16	10	1	0	0	0	0	0	0	**228**
17:00 - 17:14	1	8	20	45	88	87	29	9	0	0	0	0	0	0	0	**287**
17:15 - 17:29	0	6	19	65	78	37	22	2	0	0	0	0	0	0	0	**229**
17:30 - 17:44	2	8	29	53	74	33	29	9	2	2	0	0	0	0	0	**241**
17:45 - 17:59	0	8	13	42	64	36	13	4	4	0	1	0	0	0	0	**185**
18:00 - 18:14	0	6	19	46	85	93	39	8	2	0	0	0	0	0	0	**298**
18:15 - 18:29	0	5	25	49	83	76	52	9	3	0	0	0	0	0	0	**302**
18:30 - 18:44	1	5	15	29	91	92	34	13	0	0	0	0	0	0	0	**280**
18:45 - 18:59	4	4	13	37	57	74	49	21	3	1	0	0	0	0	0	**263**
19:00 - 19:14	1	4	2	13	69	116	37	14	4	1	0	0	0	0	0	**261**
19:15 - 19:29	0	0	2	8	65	99	64	26	4	2	0	0	0	0	0	**270**
19:30 - 19:44	0	1	4	10	56	82	54	20	5	1	1	0	0	0	0	**234**
19:45 - 19:59	0	0	6	24	68	75	39	25	8	0	0	0	0	0	0	**245**
20:00 - 20:14	0	1	7	31	57	58	45	19	5	1	0	0	0	0	0	**224**
20:15 - 20:29	0	2	12	19	28	80	57	20	6	1	0	0	0	0	0	**225**
20:30 - 20:44	1	8	15	15	31	53	22	22	9	0	0	0	0	0	0	**176**
20:45 - 20:59	2	9	16	29	23	24	25	15	5	3	1	0	0	0	0	**152**
21:00 - 21:14	0	9	28	20	23	32	31	24	11	5	1	0	0	0	0	**184**
21:15 - 21:29	0	5	11	16	39	23	26	5	6	4	3	0	0	0	1	**139**
21:30 - 21:44	0	14	21	19	36	16	9	12	2	1	0	0	0	0	0	**130**
21:45 - 21:59	0	7	12	46	38	17	18	7	5	2	0	0	0	0	0	**152**
22:00 - 22:14	0	0	3	10	20	40	42	26	11	2	0	0	0	0	0	**154**
22:15 - 22:29	1	2	16	21	17	34	44	23	4	2	0	0	1	0	0	**165**
22:30 - 22:44	0	2	3	8	15	40	38	23	9	2	0	0	0	0	0	**140**
22:45 - 22:59	0	0	0	12	11	30	41	28	6	4	0	0	0	0	0	**132**
23:00 - 23:14	0	0	2	9	16	31	43	14	11	2	1	0	0	0	0	**129**
23:15 - 23:29	0	2	1	3	26	21	22	20	10	3	0	0	0	0	0	**108**
23:30 - 23:44	0	0	0	2	9	17	26	15	5	6	1	0	0	0	0	**81**
23:45 - 23:59	0	0	0	1	7	11	17	25	13	5	0	0	0	0	0	**79**
Totals	**51**	**473**	**1239**	**2711**	**3625**	**3320**	**2223**	**1115**	**419**	**110**	**24**	**2**	**3**	**3**	**2**	**15320**
Percent of Total	**0.3**	**3.1**	**8.1**	**17.7**	**23.7**	**21.7**	**14.5**	**7.3**	**2.7**	**0.7**	**0.2**	**0.0**	**0.0**	**0.0**	**0.0**	**100**
Percent of AM	**0.4**	**3.9**	**9.1**	**21.4**	**22.9**	**16.0**	**13.1**	**8.1**	**4.0**	**0.9**	**0.3**	**0.0**	**0.0**	**0.0**	**0.0**	**100**
Percent of PM	**0.3**	**2.6**	**7.5**	**15.6**	**24.1**	**25.0**	**15.4**	**6.8**	**2.0**	**0.6**	**0.1**	**0.0**	**0.0**	**0.0**	**0.0**	**100**

Daily Eastbound Speeds (MPH)

Study Date: Wednesday, 09/19/2018
Unit ID: 0190
Location: W FLAGLER ST / W OF NW 69TH AVE

Standard Deviation:	8.6 MPH	Ten Mile Pace:	20 to 29 MPH	85th Percentile:	34.3 MPH
Mean Speed:	25.2 MPH	Percent in Ten Mile Pace:	45.3%		
Median Speed:	25.3 MPH			15th Percentile:	16.2 MPH
Modal Speed:	23.0 MPH			90th Percentile:	35.8 MPH
				95th Percentile:	39.9 MPH

Daily Eastbound Speeds (MPH)

Study Date: Thursday, 09/20/2018
Unit ID: 0190
Location: W FLAGLER ST / W OF NW 69TH AVE

	0-5	5-10	10-15	15-20	20-25	25-30	30-35	35-40	40-45	45-50	50-55	55-60	60-65	65-70	70-75	Total
00:00 - 00:14	0	1	0	2	11	10	15	6	5	2	0	0	0	0	0	**52**
00:15 - 00:29	0	0	1	7	5	9	3	9	3	2	0	0	0	0	0	**39**
00:30 - 00:44	0	0	4	1	16	13	10	8	4	2	0	0	0	0	0	**58**
00:45 - 00:59	0	0	0	5	11	8	11	5	4	0	0	0	0	0	0	**44**
01:00 - 01:14	0	0	0	3	9	10	2	5	1	0	0	0	0	0	0	**30**
01:15 - 01:29	1	0	1	3	6	2	7	2	3	1	0	1	0	0	0	**27**
01:30 - 01:44	0	0	0	1	2	8	9	8	5	0	1	0	0	0	0	**34**
01:45 - 01:59	0	0	0	0	3	4	10	11	5	0	0	0	0	0	0	**33**
02:00 - 02:14	0	0	1	0	0	3	4	6	5	0	0	0	0	0	0	**19**
02:15 - 02:29	0	0	0	0	1	4	4	7	2	1	0	0	0	0	0	**19**
02:30 - 02:44	0	0	0	0	2	4	6	5	1	1	0	0	0	0	0	**19**
02:45 - 02:59	0	0	0	0	0	2	3	4	1	0	0	0	0	0	0	**10**
03:00 - 03:14	0	0	0	1	0	1	12	6	4	2	0	0	0	0	0	**26**
03:15 - 03:29	0	0	0	0	1	3	4	8	6	3	0	0	0	0	0	**25**
03:30 - 03:44	0	0	0	0	0	4	8	5	3	1	0	0	0	0	0	**21**
03:45 - 03:59	0	0	0	1	0	1	10	4	3	1	0	0	0	0	0	**20**
04:00 - 04:14	0	0	0	0	2	2	11	7	6	1	1	0	0	0	0	**30**
04:15 - 04:29	0	1	0	1	2	4	7	15	4	2	0	0	0	0	0	**36**
04:30 - 04:44	0	0	0	0	3	5	18	11	7	1	0	1	1	0	0	**47**
04:45 - 04:59	0	0	0	1	6	6	16	20	16	2	0	0	0	0	0	**67**
05:00 - 05:14	0	0	0	2	5	10	18	14	11	0	1	0	0	0	0	**61**
05:15 - 05:29	0	1	1	4	8	16	19	23	13	6	1	0	0	0	0	**92**
05:30 - 05:44	0	3	2	7	7	11	25	27	15	5	0	0	0	0	0	**102**
05:45 - 05:59	0	2	1	6	10	28	35	23	23	5	1	0	0	0	0	**134**
06:00 - 06:14	1	2	8	12	13	8	29	28	14	4	1	0	0	0	0	**120**
06:15 - 06:29	2	6	9	22	28	42	40	14	11	3	0	0	0	0	0	**177**
06:30 - 06:44	1	7	10	26	22	46	55	23	9	5	0	0	0	0	0	**204**
06:45 - 06:59	1	9	15	36	27	39	31	25	6	2	1	0	0	0	0	**192**
07:00 - 07:14	0	9	6	20	24	56	53	15	7	0	0	0	0	0	0	**190**
07:15 - 07:29	2	11	44	45	47	31	24	2	0	0	0	0	0	0	0	**206**
07:30 - 07:44	0	6	28	56	79	35	19	3	3	0	0	0	0	1	0	**230**
07:45 - 07:59	1	7	15	43	70	35	12	6	3	1	0	0	0	0	0	**193**
08:00 - 08:14	1	10	23	61	23	14	11	13	0	1	1	0	0	0	0	**158**
08:15 - 08:29	10	18	25	70	68	8	2	1	0	0	0	0	0	0	0	**202**
08:30 - 08:44	0	20	38	72	25	6	3	2	0	0	0	0	0	0	0	**166**
08:45 - 08:59	3	13	27	68	45	8	1	0	0	0	0	0	0	0	0	**165**
09:00 - 09:14	3	8	15	65	61	6	5	0	0	0	0	0	0	0	0	**163**
09:15 - 09:29	0	20	44	65	28	0	2	0	0	0	0	0	0	0	0	**159**
09:30 - 09:44	2	4	36	56	42	27	15	11	3	0	0	0	0	0	0	**196**
09:45 - 09:59	1	7	12	44	65	54	27	14	1	0	0	0	0	0	0	**225**
10:00 - 10:14	1	10	25	44	53	32	16	2	0	0	0	0	0	0	0	**183**
10:15 - 10:29	0	9	30	60	32	13	1	1	0	0	0	0	0	0	0	**146**
10:30 - 10:44	1	8	19	42	60	19	9	4	2	2	0	0	0	0	0	**166**
10:45 - 10:59	0	6	32	59	68	39	27	11	2	0	0	0	0	0	0	**244**
11:00 - 11:14	0	8	14	50	40	46	28	7	5	0	0	0	0	0	0	**198**
11:15 - 11:29	1	6	15	48	63	27	11	2	3	0	0	0	0	0	0	**176**
11:30 - 11:44	0	2	14	36	86	66	27	8	5	3	0	0	0	0	0	**247**
11:45 - 11:59	2	8	22	61	44	26	19	6	7	3	0	0	0	1	0	**199**
12:00 - 12:14	0	5	18	44	41	21	31	5	0	1	0	0	0	0	0	**166**
12:15 - 12:29	2	7	12	43	39	23	16	9	2	1	1	0	0	0	0	**155**
12:30 - 12:44	1	4	20	40	62	37	26	7	1	0	1	0	0	0	0	**199**

Daily Eastbound Speeds (MPH)

Study Date: Thursday, 09/20/2018
Unit ID: 0190
Location: W FLAGLER ST / W OF NW 69TH AVE

	0-5	5-10	10-15	15-20	20-25	25-30	30-35	35-40	40-45	45-50	50-55	55-60	60-65	65-70	70-75	Total
12:45 - 12:59	0	5	14	26	36	38	30	15	3	3	0	0	0	0	0	**170**
13:00 - 13:14	1	0	27	50	64	20	17	12	2	1	0	0	0	0	0	**194**
13:15 - 13:29	2	8	50	62	53	24	4	3	0	0	0	0	0	0	0	**206**
13:30 - 13:44	0	4	12	25	35	50	30	13	2	1	0	1	0	0	0	**173**
13:45 - 13:59	1	5	14	32	72	34	24	10	3	0	0	0	0	0	0	**195**
14:00 - 14:14	0	1	13	35	93	66	32	9	0	1	0	0	0	0	0	**250**
14:15 - 14:29	1	11	19	37	65	37	33	16	1	0	0	0	0	0	0	**220**
14:30 - 14:44	0	5	6	13	55	73	58	20	2	0	0	0	0	0	0	**232**
14:45 - 14:59	0	7	18	37	88	71	31	6	1	1	0	0	0	0	0	**260**
15:00 - 15:14	0	1	12	15	59	71	57	18	2	0	0	0	0	0	0	**235**
15:15 - 15:29	0	6	19	35	47	58	30	1	1	0	0	0	0	0	0	**197**
15:30 - 15:44	2	1	13	27	107	81	45	3	2	0	0	0	0	0	0	**281**
15:45 - 15:59	3	3	13	27	87	76	36	10	2	1	0	0	0	0	0	**258**
16:00 - 16:14	0	6	11	52	90	53	28	8	6	0	1	0	0	0	0	**255**
16:15 - 16:29	0	2	8	31	73	88	38	14	3	1	0	0	0	0	0	**258**
16:30 - 16:44	0	1	2	31	90	89	67	20	4	0	0	0	0	0	0	**304**
16:45 - 16:59	0	6	9	24	59	89	61	11	3	0	0	0	0	0	0	**262**
17:00 - 17:14	0	7	9	34	93	90	42	6	2	0	0	0	0	0	0	**283**
17:15 - 17:29	1	5	14	28	74	101	34	6	0	1	0	0	0	0	0	**264**
17:30 - 17:44	0	4	10	23	122	73	40	12	1	0	0	0	0	0	0	**285**
17:45 - 17:59	0	1	2	10	46	104	78	37	13	1	1	0	0	0	0	**293**
18:00 - 18:14	1	4	7	46	73	80	56	11	4	0	0	0	0	0	0	**282**
18:15 - 18:29	0	4	3	24	117	98	56	19	7	0	2	0	0	0	0	**330**
18:30 - 18:44	0	3	2	17	77	114	60	18	7	0	0	0	0	0	0	**298**
18:45 - 18:59	1	5	10	36	52	41	31	20	7	2	0	0	0	0	0	**205**
19:00 - 19:14	0	6	11	26	68	83	79	22	9	2	0	0	0	0	0	**306**
19:15 - 19:29	0	2	3	13	42	82	66	22	6	1	0	0	0	0	0	**237**
19:30 - 19:44	0	5	15	44	49	52	33	7	3	0	0	1	0	0	0	**209**
19:45 - 19:59	1	0	11	29	40	61	49	24	12	3	0	0	0	0	0	**230**
20:00 - 20:14	1	5	9	12	22	46	31	20	4	1	0	0	0	0	0	**151**
20:15 - 20:29	2	1	8	18	33	36	57	25	10	1	0	0	0	0	0	**191**
20:30 - 20:44	9	10	18	15	35	41	35	10	6	1	1	0	0	0	0	**181**
20:45 - 20:59	0	3	12	31	18	26	41	16	3	1	0	1	1	1	0	**154**
21:00 - 21:14	1	7	18	23	33	47	45	18	3	2	1	1	0	0	0	**199**
21:15 - 21:29	0	10	4	33	33	30	38	22	5	1	1	0	0	0	0	**177**
21:30 - 21:44	0	13	20	32	29	23	20	10	6	1	0	0	0	0	0	**154**
21:45 - 21:59	0	6	9	25	37	42	23	7	1	0	1	0	0	0	0	**151**
22:00 - 22:14	2	2	2	15	20	43	31	26	9	4	0	0	0	0	0	**154**
22:15 - 22:29	0	4	5	28	24	39	55	21	6	0	1	0	0	0	0	**183**
22:30 - 22:44	1	6	3	15	27	27	32	22	7	1	0	0	1	0	0	**142**
22:45 - 22:59	0	3	6	13	14	31	15	12	5	0	1	0	0	0	0	**100**
23:00 - 23:14	1	2	2	8	17	13	15	9	5	3	0	0	0	0	0	**75**
23:15 - 23:29	1	5	2	3	11	29	23	15	12	2	0	0	0	0	0	**103**
23:30 - 23:44	1	1	1	4	11	15	26	10	7	2	0	0	0	0	0	**78**
23:45 - 23:59	0	0	4	8	24	20	17	17	7	1	0	0	0	0	0	**98**
Totals	**70**	**434**	**1067**	**2505**	**3779**	**3437**	**2556**	**1111**	**438**	**104**	**20**	**6**	**3**	**3**	**0**	**15533**
Percent of Total	**0.5**	**2.8**	**6.9**	**16.1**	**24.3**	**22.1**	**16.5**	**7.2**	**2.8**	**0.7**	**0.1**	**0.0**	**0.0**	**0.0**	**0.0**	**100**
Percent of AM	**0.6**	**4.0**	**9.7**	**21.7**	**22.0**	**15.3**	**13.2**	**7.9**	**4.2**	**1.1**	**0.1**	**0.0**	**0.0**	**0.0**	**0.0**	**100**
Percent of PM	**0.4**	**2.1**	**5.3**	**13.0**	**25.6**	**25.9**	**18.3**	**6.8**	**2.1**	**0.4**	**0.1**	**0.0**	**0.0**	**0.0**	**0.0**	**100**

Daily Eastbound Speeds (MPH)

Study Date: Thursday, 09/20/2018
Unit ID: 0190
Location: W FLAGLER ST / W OF NW 69TH AVE

Standard Deviation:	8.4 MPH	Ten Mile Pace:	20 to 29 MPH	85th Percentile:	34.5 MPH
Mean Speed:	25.6 MPH	Percent in Ten Mile Pace:	46.5%		
Median Speed:	25.9 MPH			15th Percentile:	16.8 MPH
Modal Speed:	23.0 MPH			90th Percentile:	35.7 MPH
				95th Percentile:	39.9 MPH

Daily Westbound Speeds (MPH)

Study Date: Tuesday, 09/18/2018
Unit ID: 0082
Location: W FLAGLER ST / W OF NW 69TH AVE

	0-5	5-10	10-15	15-20	20-25	25-30	30-35	35-40	40-45	45-50	50-55	55-60	60-65	65-70	70-75	Total
00:00 - 00:14	0	0	0	3	25	19	11	5	5	0	0	0	0	0	0	**68**
00:15 - 00:29	0	0	0	2	20	15	10	6	1	0	0	0	0	0	0	**54**
00:30 - 00:44	0	0	0	5	11	6	7	9	4	2	1	0	0	0	0	**45**
00:45 - 00:59	0	0	0	0	7	9	11	8	3	2	1	0	0	0	0	**41**
01:00 - 01:14	0	0	0	1	0	6	5	8	3	2	0	0	0	0	0	**25**
01:15 - 01:29	0	0	0	0	9	6	4	10	6	3	0	0	0	0	0	**38**
01:30 - 01:44	0	1	0	1	5	3	9	8	7	1	0	0	0	0	0	**35**
01:45 - 01:59	0	0	1	0	5	5	6	5	3	1	1	0	0	0	0	**27**
02:00 - 02:14	0	0	0	0	2	2	11	4	0	0	0	0	0	0	0	**19**
02:15 - 02:29	0	0	0	0	2	1	4	4	4	1	1	0	0	0	0	**17**
02:30 - 02:44	0	1	0	0	4	1	4	4	4	1	0	0	0	0	0	**19**
02:45 - 02:59	0	0	0	0	1	4	4	5	6	2	0	0	0	0	0	**22**
03:00 - 03:14	0	0	0	1	0	2	6	3	1	0	1	0	0	0	0	**14**
03:15 - 03:29	0	0	0	0	2	1	6	5	2	4	2	0	0	0	0	**22**
03:30 - 03:44	0	1	0	0	2	6	7	10	2	3	0	0	0	0	0	**31**
03:45 - 03:59	0	0	0	1	3	3	5	7	4	3	1	0	0	0	0	**27**
04:00 - 04:14	0	0	0	3	2	2	8	7	3	2	0	0	0	0	0	**27**
04:15 - 04:29	0	0	0	0	2	4	5	10	6	5	0	0	1	0	0	**33**
04:30 - 04:44	0	0	0	1	4	13	16	16	15	6	2	0	0	0	0	**73**
04:45 - 04:59	0	0	0	4	2	3	19	14	9	5	1	0	0	0	0	**57**
05:00 - 05:14	0	0	0	2	14	13	13	14	4	2	0	0	0	0	0	**62**
05:15 - 05:29	0	1	0	7	15	13	25	19	19	5	2	0	0	0	0	**106**
05:30 - 05:44	0	0	1	7	24	20	34	24	19	2	0	0	1	0	0	**132**
05:45 - 05:59	0	0	1	7	35	35	37	40	8	8	0	0	0	0	0	**171**
06:00 - 06:14	0	0	5	11	39	38	42	23	14	6	0	1	0	0	0	**179**
06:15 - 06:29	0	1	0	18	54	35	30	16	12	4	2	0	0	0	0	**172**
06:30 - 06:44	0	1	1	22	65	60	63	36	12	0	0	0	0	0	0	**260**
06:45 - 06:59	0	0	0	7	105	63	46	25	6	3	1	0	0	0	0	**256**
07:00 - 07:14	0	0	3	11	75	79	72	32	5	1	0	0	0	0	0	**278**
07:15 - 07:29	0	1	4	17	65	110	53	21	7	0	0	0	0	0	0	**278**
07:30 - 07:44	0	0	1	24	117	91	61	14	4	0	0	0	0	0	0	**312**
07:45 - 07:59	0	0	4	40	104	85	37	12	5	0	0	0	0	0	0	**287**
08:00 - 08:14	0	0	1	22	92	103	55	19	11	0	0	1	0	0	0	**304**
08:15 - 08:29	0	2	7	48	123	92	32	10	2	0	1	1	0	0	0	**318**
08:30 - 08:44	0	0	8	22	82	52	59	27	5	3	0	0	0	0	0	**258**
08:45 - 08:59	1	6	2	32	103	82	62	18	5	2	0	0	0	0	0	**313**
09:00 - 09:14	0	0	3	23	83	77	38	19	7	1	0	0	0	0	0	**251**
09:15 - 09:29	0	1	0	16	72	109	44	21	4	1	0	0	0	0	0	**268**
09:30 - 09:44	0	0	5	18	83	72	47	29	12	0	3	0	0	0	0	**269**
09:45 - 09:59	0	0	3	17	80	82	56	16	1	1	0	0	0	0	0	**256**
10:00 - 10:14	1	0	1	23	82	86	41	18	4	1	0	0	0	0	0	**257**
10:15 - 10:29	0	2	11	24	57	68	48	29	7	0	0	0	0	0	0	**246**
10:30 - 10:44	0	2	10	28	109	83	34	16	8	0	0	0	0	0	0	**290**
10:45 - 10:59	0	1	7	30	84	83	49	8	8	0	0	0	0	0	0	**270**
11:00 - 11:14	0	4	16	32	89	68	29	17	3	0	0	0	0	0	0	**258**
11:15 - 11:29	0	2	3	23	85	60	51	16	0	0	0	0	0	0	0	**240**
11:30 - 11:44	0	2	10	31	103	97	41	11	0	0	0	0	0	0	0	**295**
11:45 - 11:59	0	0	4	18	92	71	49	16	11	2	0	0	0	0	0	**263**
12:00 - 12:14	0	0	7	24	103	81	35	18	6	0	0	0	0	0	0	**274**
12:15 - 12:29	1	3	11	24	92	89	51	20	5	0	2	0	0	0	0	**298**
12:30 - 12:44	0	0	5	25	75	82	48	13	3	0	0	1	0	0	0	**252**

Daily Westbound Speeds (MPH)

Study Date: Tuesday, 09/18/2018
Unit ID: 0082
Location: W FLAGLER ST / W OF NW 69TH AVE

	0-5	5-10	10-15	15-20	20-25	25-30	30-35	35-40	40-45	45-50	50-55	55-60	60-65	65-70	70-75	Total
12:45 - 12:59	0	0	3	15	77	92	63	16	2	0	0	0	0	0	0	**268**
13:00 - 13:14	0	0	2	39	98	78	48	9	6	0	1	0	0	0	0	**281**
13:15 - 13:29	0	1	4	24	84	86	59	17	2	0	0	0	0	1	0	**278**
13:30 - 13:44	0	0	4	23	79	93	54	26	6	1	0	0	0	0	0	**286**
13:45 - 13:59	0	0	2	16	90	87	39	26	2	2	0	0	0	0	0	**264**
14:00 - 14:14	0	1	13	44	83	102	41	14	4	4	0	0	0	0	0	**306**
14:15 - 14:29	0	1	8	43	120	103	39	11	2	1	0	0	0	0	0	**328**
14:30 - 14:44	0	0	3	39	116	94	35	12	7	1	0	0	0	0	0	**307**
14:45 - 14:59	0	0	6	34	94	84	47	18	10	2	1	1	0	0	0	**297**
15:00 - 15:14	0	0	2	38	81	67	50	20	2	1	0	0	0	0	0	**261**
15:15 - 15:29	0	0	3	35	118	61	40	13	1	0	0	0	0	0	0	**271**
15:30 - 15:44	0	1	4	26	134	110	51	15	1	1	0	0	0	0	0	**343**
15:45 - 15:59	0	0	8	47	117	103	38	18	3	0	0	0	0	0	0	**334**
16:00 - 16:14	0	3	8	48	118	70	36	12	5	0	0	0	1	0	0	**301**
16:15 - 16:29	0	10	28	84	92	51	14	1	0	0	0	0	0	0	0	**280**
16:30 - 16:44	3	12	17	61	59	7	1	0	0	1	0	0	2	0	0	**163**
16:45 - 16:59	1	11	51	86	60	19	9	0	3	0	1	0	0	0	0	**241**
17:00 - 17:14	0	1	5	20	147	106	45	12	7	1	1	0	0	0	0	**345**
17:15 - 17:29	1	4	18	53	99	60	21	4	0	0	0	0	0	0	0	**260**
17:30 - 17:44	3	3	22	72	106	64	17	7	3	0	0	0	0	0	0	**297**
17:45 - 17:59	4	13	37	67	44	5	1	0	1	0	0	0	1	0	1	**174**
18:00 - 18:14	0	9	48	117	61	5	0	0	1	0	0	0	0	0	0	**241**
18:15 - 18:29	1	14	27	80	57	5	1	0	0	0	1	0	0	0	0	**186**
18:30 - 18:44	0	6	18	82	105	21	8	3	1	0	0	0	0	0	0	**244**
18:45 - 18:59	0	3	6	36	105	82	37	16	5	1	0	0	0	0	0	**291**
19:00 - 19:14	0	1	9	50	101	57	32	12	6	0	0	0	0	0	0	**268**
19:15 - 19:29	0	1	1	32	124	75	44	8	5	1	0	0	0	0	0	**291**
19:30 - 19:44	0	1	7	29	91	71	42	17	4	2	0	0	0	0	0	**264**
19:45 - 19:59	0	0	2	25	88	62	46	20	3	1	0	1	0	0	0	**248**
20:00 - 20:14	0	0	3	33	79	55	53	22	8	5	0	0	0	0	0	**258**
20:15 - 20:29	0	0	0	16	94	51	55	14	6	1	0	0	0	0	0	**237**
20:30 - 20:44	0	1	1	23	43	60	75	26	13	3	0	0	0	0	0	**245**
20:45 - 20:59	0	0	2	8	55	52	44	23	12	2	0	0	0	0	0	**198**
21:00 - 21:14	0	0	1	10	43	37	56	33	7	2	1	0	0	0	0	**190**
21:15 - 21:29	0	1	1	11	63	34	49	24	8	1	1	0	0	0	0	**193**
21:30 - 21:44	0	1	1	12	43	51	45	19	11	2	1	0	0	0	0	**186**
21:45 - 21:59	0	0	0	4	26	28	32	33	13	3	2	0	0	0	0	**141**
22:00 - 22:14	0	0	0	15	43	48	36	17	12	1	2	0	0	0	0	**174**
22:15 - 22:29	0	0	3	11	41	31	30	23	8	3	0	0	0	0	0	**150**
22:30 - 22:44	0	1	1	7	36	34	30	23	10	3	0	0	0	0	0	**145**
22:45 - 22:59	0	0	0	5	22	16	24	33	13	2	1	0	0	0	0	**116**
23:00 - 23:14	0	0	1	3	18	25	28	15	8	4	0	0	0	0	0	**102**
23:15 - 23:29	0	0	0	10	13	12	25	20	8	3	2	0	0	0	0	**93**
23:30 - 23:44	0	1	1	5	17	11	32	19	9	0	0	0	0	0	0	**95**
23:45 - 23:59	0	0	0	4	9	11	20	15	8	2	1	0	0	0	0	**70**
Totals	**16**	**133**	**516**	**2217**	**5902**	**4766**	**3132**	**1451**	**551**	**142**	**38**	**6**	**6**	**1**	**1**	**18878**
Percent of Total	**0.1**	**0.7**	**2.7**	**11.7**	**31.3**	**25.2**	**16.6**	**7.7**	**2.9**	**0.8**	**0.2**	**0.0**	**0.0**	**0.0**	**0.0**	**100**
Percent of AM	**0.0**	**0.4**	**1.5**	**8.0**	**29.7**	**27.0**	**18.6**	**9.5**	**3.9**	**1.1**	**0.3**	**0.0**	**0.0**	**0.0**	**0.0**	**100**
Percent of PM	**0.1**	**0.9**	**3.6**	**14.2**	**32.3**	**24.1**	**15.2**	**6.5**	**2.3**	**0.5**	**0.2**	**0.0**	**0.0**	**0.0**	**0.0**	**100**

Daily Westbound Speeds (MPH)

Study Date: Tuesday, 09/18/2018
Unit ID: 0082
Location: W FLAGLER ST / W OF NW 69TH AVE

Standard Deviation:	7.4 MPH	Ten Mile Pace:	20 to 29 MPH	85th Percentile:	34.8 MPH
Mean Speed:	27.0 MPH	Percent in Ten Mile Pace:	56.5%	15th Percentile:	20.9 MPH
Median Speed:	25.8 MPH			90th Percentile:	36.3 MPH
Modal Speed:	23.0 MPH			95th Percentile:	40.2 MPH

Daily Westbound Speeds (MPH)

Study Date: Wednesday, 09/19/2018
Unit ID: 0082
Location: W FLAGLER ST / W OF NW 69TH AVE

	0-5	5-10	10-15	15-20	20-25	25-30	30-35	35-40	40-45	45-50	50-55	55-60	60-65	65-70	70-75	Total
00:00 - 00:14	0	0	0	1	16	13	9	8	1	0	0	0	0	0	0	**48**
00:15 - 00:29	0	0	0	3	16	10	15	17	5	1	0	0	0	0	0	**67**
00:30 - 00:44	0	0	0	3	15	8	10	8	3	6	0	0	0	0	0	**53**
00:45 - 00:59	0	0	1	1	12	14	1	4	1	1	2	0	0	0	0	**37**
01:00 - 01:14	0	0	0	2	15	7	7	1	2	0	0	0	0	0	0	**34**
01:15 - 01:29	0	0	1	2	11	4	5	4	0	0	0	0	0	0	0	**27**
01:30 - 01:44	0	0	1	2	5	3	10	4	4	2	0	0	0	0	0	**31**
01:45 - 01:59	0	0	0	1	2	2	5	7	4	2	0	0	0	0	0	**23**
02:00 - 02:14	0	0	0	1	3	2	11	4	4	2	1	0	0	0	0	**28**
02:15 - 02:29	0	0	1	2	2	2	5	5	3	0	0	0	0	0	0	**20**
02:30 - 02:44	0	1	0	0	4	2	6	10	6	0	0	0	0	0	0	**29**
02:45 - 02:59	0	0	0	1	2	6	2	5	6	0	0	0	0	0	0	**22**
03:00 - 03:14	0	0	0	1	2	3	4	4	1	1	1	0	0	0	0	**17**
03:15 - 03:29	0	0	0	0	1	1	4	8	3	2	2	3	0	0	0	**24**
03:30 - 03:44	0	0	0	2	4	5	5	10	6	2	0	1	0	0	0	**35**
03:45 - 03:59	0	0	0	0	6	4	8	9	4	3	2	0	0	0	0	**36**
04:00 - 04:14	0	0	0	2	1	3	9	9	4	3	1	0	0	0	0	**32**
04:15 - 04:29	0	0	1	1	4	4	13	8	6	7	2	0	0	0	0	**46**
04:30 - 04:44	0	0	0	1	8	5	11	19	7	3	0	0	0	0	0	**54**
04:45 - 04:59	0	0	0	3	9	15	13	19	9	1	3	0	0	0	0	**72**
05:00 - 05:14	0	0	1	3	10	14	11	11	8	6	1	0	0	0	0	**65**
05:15 - 05:29	0	0	2	6	7	14	16	20	17	6	2	0	0	0	0	**90**
05:30 - 05:44	0	1	1	2	18	24	32	27	16	8	0	0	0	0	0	**129**
05:45 - 05:59	0	0	1	9	28	28	34	41	19	3	1	0	0	0	0	**164**
06:00 - 06:14	0	0	1	5	32	25	29	51	15	4	1	0	0	0	0	**163**
06:15 - 06:29	0	2	0	13	52	43	49	35	14	1	1	0	0	0	0	**210**
06:30 - 06:44	1	2	2	20	64	63	64	21	13	1	2	0	0	0	0	**253**
06:45 - 06:59	0	0	2	20	71	74	47	27	7	4	0	0	0	0	0	**252**
07:00 - 07:14	0	0	1	14	87	109	49	20	4	2	0	0	0	0	0	**286**
07:15 - 07:29	0	0	4	19	69	68	57	33	12	0	1	0	0	0	0	**263**
07:30 - 07:44	0	0	5	26	102	136	59	11	2	0	1	0	0	0	0	**342**
07:45 - 07:59	0	0	1	21	88	86	59	28	8	2	0	0	1	0	0	**294**
08:00 - 08:14	0	1	3	44	120	81	50	8	3	1	0	0	0	0	0	**311**
08:15 - 08:29	0	0	3	20	129	77	40	15	4	0	1	0	0	0	0	**289**
08:30 - 08:44	0	0	2	30	86	64	53	16	10	3	1	0	0	0	0	**265**
08:45 - 08:59	0	0	2	25	94	106	49	15	5	2	0	0	0	0	0	**298**
09:00 - 09:14	0	0	1	24	96	77	39	10	8	3	0	0	0	0	0	**258**
09:15 - 09:29	2	3	7	30	75	71	45	7	6	1	1	0	0	0	0	**248**
09:30 - 09:44	0	2	6	27	71	88	50	8	2	1	0	0	0	0	0	**255**
09:45 - 09:59	0	0	2	27	72	76	53	20	9	1	1	0	0	0	0	**261**
10:00 - 10:14	0	0	2	20	93	64	47	27	7	0	1	0	0	0	0	**261**
10:15 - 10:29	0	1	3	19	84	73	61	19	3	0	0	0	0	0	0	**263**
10:30 - 10:44	0	3	4	37	72	65	56	24	9	1	0	0	0	0	0	**271**
10:45 - 10:59	0	1	11	39	100	71	40	16	3	2	1	0	0	0	0	**284**
11:00 - 11:14	0	0	7	20	93	103	32	12	2	0	0	0	0	0	0	**269**
11:15 - 11:29	0	1	4	18	77	62	46	15	3	0	0	0	0	0	0	**226**
11:30 - 11:44	1	2	0	15	87	84	47	21	3	0	0	0	0	0	0	**260**
11:45 - 11:59	0	1	2	14	58	88	61	25	5	1	0	0	0	0	0	**255**
12:00 - 12:14	0	0	3	45	81	96	37	17	5	1	0	0	0	0	0	**285**
12:15 - 12:29	1	4	14	18	88	86	47	18	3	0	1	0	0	0	0	**280**
12:30 - 12:44	0	1	3	34	85	69	43	22	3	0	0	0	0	0	0	**260**

Daily Westbound Speeds (MPH)

Study Date: Wednesday, 09/19/2018
Unit ID: 0082
Location: W FLAGLER ST / W OF NW 69TH AVE

	0-5	5-10	10-15	15-20	20-25	25-30	30-35	35-40	40-45	45-50	50-55	55-60	60-65	65-70	70-75	Total
12:45 - 12:59	0	0	10	32	97	85	53	18	5	1	0	0	0	0	0	**301**
13:00 - 13:14	0	1	6	29	97	75	58	16	5	1	0	0	0	0	0	**288**
13:15 - 13:29	0	1	9	37	99	83	44	10	1	1	0	0	1	0	0	**286**
13:30 - 13:44	0	2	2	39	108	77	37	21	2	1	0	0	0	0	0	**289**
13:45 - 13:59	0	0	9	35	104	71	47	16	2	1	0	0	0	0	0	**285**
14:00 - 14:14	0	1	13	39	106	75	30	4	3	1	0	0	0	0	0	**272**
14:15 - 14:29	0	2	6	34	107	91	36	8	2	0	0	0	0	0	0	**286**
14:30 - 14:44	1	2	10	32	104	62	38	9	3	0	0	0	0	0	0	**261**
14:45 - 14:59	0	1	3	16	112	87	60	12	5	2	0	0	0	0	0	**298**
15:00 - 15:14	0	1	10	26	100	58	40	25	5	2	1	0	0	0	0	**268**
15:15 - 15:29	0	1	8	56	113	83	41	13	3	0	0	0	0	0	0	**318**
15:30 - 15:44	0	0	6	31	122	100	39	19	2	1	0	0	0	0	0	**320**
15:45 - 15:59	0	0	5	34	127	86	47	14	0	0	0	0	0	0	0	**313**
16:00 - 16:14	1	0	5	33	133	93	34	15	6	2	0	0	0	0	0	**322**
16:15 - 16:29	0	2	5	26	136	115	41	10	4	1	0	0	0	0	0	**340**
16:30 - 16:44	0	1	3	73	141	76	18	4	0	0	1	0	0	0	0	**317**
16:45 - 16:59	0	3	20	77	116	39	11	3	0	0	0	0	0	0	0	**269**
17:00 - 17:14	0	13	26	94	88	33	5	1	0	0	0	0	0	0	0	**260**
17:15 - 17:29	2	11	10	67	107	44	7	8	0	0	0	0	0	0	0	**256**
17:30 - 17:44	1	12	45	52	41	11	6	1	2	0	0	0	1	0	0	**172**
17:45 - 17:59	2	13	40	72	51	20	2	1	0	0	0	0	0	0	0	**201**
18:00 - 18:14	1	11	21	80	109	22	4	0	0	0	0	0	0	0	0	**248**
18:15 - 18:29	0	6	22	88	109	29	3	5	3	0	0	0	0	0	0	**265**
18:30 - 18:44	1	6	17	51	110	38	15	4	0	0	0	0	0	0	0	**242**
18:45 - 18:59	0	0	14	105	132	46	19	3	0	0	0	0	0	0	0	**319**
19:00 - 19:14	1	1	8	58	123	70	25	8	0	0	0	0	0	0	0	**294**
19:15 - 19:29	0	0	5	60	112	82	32	10	2	2	0	0	0	0	0	**305**
19:30 - 19:44	0	0	6	55	114	76	40	5	0	1	0	0	0	0	0	**297**
19:45 - 19:59	0	0	4	36	95	48	29	20	13	1	1	0	0	0	0	**247**
20:00 - 20:14	0	0	6	22	64	62	51	24	2	0	1	0	0	0	0	**232**
20:15 - 20:29	0	0	3	14	85	75	32	15	1	0	0	0	0	0	1	**226**
20:30 - 20:44	0	0	1	18	71	51	45	18	6	5	0	0	0	0	0	**215**
20:45 - 20:59	0	0	0	14	54	40	58	19	12	0	0	0	0	0	0	**197**
21:00 - 21:14	0	0	1	15	62	44	56	29	7	1	0	0	0	0	0	**215**
21:15 - 21:29	0	0	5	5	53	50	59	20	2	0	0	0	0	0	0	**194**
21:30 - 21:44	0	1	1	8	43	45	65	31	6	3	0	0	0	0	0	**203**
21:45 - 21:59	0	0	0	4	36	52	38	25	5	1	0	0	0	0	0	**161**
22:00 - 22:14	0	1	0	9	34	38	50	32	12	1	1	0	0	0	0	**178**
22:15 - 22:29	0	0	1	5	43	37	30	24	6	1	0	0	0	0	0	**147**
22:30 - 22:44	0	0	1	10	32	15	20	14	12	2	1	0	0	0	0	**107**
22:45 - 22:59	0	1	0	6	34	22	27	15	9	2	0	0	0	0	0	**116**
23:00 - 23:14	0	0	1	4	20	23	39	17	7	3	0	0	0	0	0	**114**
23:15 - 23:29	0	0	0	5	13	20	28	13	7	4	0	0	0	0	0	**90**
23:30 - 23:44	0	0	0	0	9	11	14	27	12	3	2	0	0	0	0	**78**
23:45 - 23:59	0	0	1	2	15	13	28	10	8	0	0	0	0	0	0	**77**
Totals	**15**	**120**	**474**	**2301**	**6208**	**4771**	**3056**	**1419**	**489**	**134**	**39**	**4**	**3**	**0**	**1**	**19034**
Percent of Total	**0.1**	**0.6**	**2.5**	**12.1**	**32.6**	**25.1**	**16.1**	**7.5**	**2.6**	**0.7**	**0.2**	**0.0**	**0.0**	**0.0**	**0.0**	**100**
Percent of AM	**0.1**	**0.3**	**1.1**	**7.9**	**28.9**	**27.2**	**19.0**	**9.9**	**3.9**	**1.2**	**0.4**	**0.1**	**0.0**	**0.0**	**0.0**	**100**
Percent of PM	**0.1**	**0.9**	**3.4**	**14.8**	**35.0**	**23.7**	**14.1**	**5.8**	**1.7**	**0.4**	**0.1**	**0.0**	**0.0**	**0.0**	**0.0**	**100**

Daily Westbound Speeds (MPH)

Study Date: Wednesday, 09/19/2018
Unit ID: 0082
Location: W FLAGLER ST / W OF NW 69TH AVE

Standard Deviation:	7.2 MPH	Ten Mile Pace:	20 to 29 MPH	85th Percentile:	34.5 MPH
Mean Speed:	26.8 MPH	Percent in Ten Mile Pace:	57.7%		
Median Speed:	25.5 MPH			15th Percentile:	20.9 MPH
Modal Speed:	23.0 MPH			90th Percentile:	35.8 MPH
				95th Percentile:	39.8 MPH

Daily Westbound Speeds (MPH)

Study Date: Thursday, 09/20/2018
Unit ID: 0082
Location: W FLAGLER ST / W OF NW 69TH AVE

	0-5	5-10	10-15	15-20	20-25	25-30	30-35	35-40	40-45	45-50	50-55	55-60	60-65	65-70	70-75	Total
00:00 - 00:14	0	0	0	4	34	19	1	6	4	2	0	0	0	0	0	**70**
00:15 - 00:29	0	0	0	1	14	14	13	10	8	2	0	0	0	0	0	**62**
00:30 - 00:44	0	1	1	0	6	8	6	7	2	4	1	1	0	0	0	**37**
00:45 - 00:59	0	0	0	1	6	7	9	5	7	2	0	0	0	0	0	**37**
01:00 - 01:14	0	0	1	2	5	6	12	8	4	0	0	0	0	0	0	**38**
01:15 - 01:29	0	0	0	1	7	8	6	7	0	1	0	0	0	0	0	**30**
01:30 - 01:44	0	1	1	2	1	6	5	11	3	1	0	0	0	0	0	**31**
01:45 - 01:59	0	0	0	1	3	3	10	15	4	4	1	0	0	0	0	**41**
02:00 - 02:14	0	0	0	4	3	5	6	3	3	2	1	0	0	0	0	**27**
02:15 - 02:29	0	0	0	0	1	4	7	10	6	2	0	0	0	0	0	**30**
02:30 - 02:44	0	0	0	0	2	2	2	3	3	0	0	0	0	0	0	**12**
02:45 - 02:59	0	0	0	1	2	4	7	11	5	0	0	1	0	0	0	**31**
03:00 - 03:14	0	0	0	0	1	0	10	6	2	2	1	0	0	0	0	**22**
03:15 - 03:29	0	0	0	1	2	5	3	3	4	1	2	0	0	0	0	**21**
03:30 - 03:44	0	0	1	0	5	3	10	8	4	2	0	0	0	0	0	**33**
03:45 - 03:59	0	0	1	0	4	0	9	7	8	2	0	2	0	0	0	**33**
04:00 - 04:14	0	0	1	0	5	4	9	5	5	6	0	0	0	0	0	**35**
04:15 - 04:29	0	0	0	0	1	5	3	15	16	1	1	0	0	0	0	**42**
04:30 - 04:44	0	1	0	1	6	6	19	14	5	7	0	0	0	0	0	**59**
04:45 - 04:59	0	0	0	2	8	5	12	18	6	1	1	0	0	0	0	**53**
05:00 - 05:14	0	0	0	6	12	15	17	9	12	7	2	0	0	0	0	**80**
05:15 - 05:29	0	0	0	3	14	18	26	30	12	4	0	0	0	0	0	**107**
05:30 - 05:44	0	0	2	4	17	28	27	21	16	6	2	1	0	0	0	**124**
05:45 - 05:59	0	0	1	6	32	28	35	43	11	4	1	0	0	0	0	**161**
06:00 - 06:14	1	0	3	12	37	39	38	24	8	5	0	1	0	0	0	**168**
06:15 - 06:29	0	0	2	10	48	56	42	41	9	4	0	0	0	0	0	**212**
06:30 - 06:44	0	0	0	15	54	78	64	24	8	4	1	0	0	1	0	**249**
06:45 - 06:59	0	0	3	17	51	58	56	28	10	1	1	0	0	0	0	**225**
07:00 - 07:14	0	0	5	23	93	70	41	16	5	0	0	0	0	0	0	**253**
07:15 - 07:29	0	1	5	12	84	70	52	32	4	1	0	0	0	0	0	**261**
07:30 - 07:44	0	3	7	29	101	98	32	18	2	0	0	0	0	0	0	**290**
07:45 - 07:59	0	0	5	24	78	96	51	29	6	0	0	0	0	0	0	**289**
08:00 - 08:14	0	0	1	30	75	108	50	17	4	3	0	0	0	0	0	**288**
08:15 - 08:29	0	1	4	29	119	96	35	10	3	1	0	0	0	0	0	**298**
08:30 - 08:44	0	1	5	38	123	77	42	7	3	1	0	0	0	0	0	**297**
08:45 - 08:59	0	0	6	20	104	85	27	12	2	0	0	0	0	0	0	**256**
09:00 - 09:14	0	0	4	20	97	96	23	9	4	0	0	0	0	0	0	**253**
09:15 - 09:29	1	3	6	30	80	51	49	27	3	2	1	0	0	0	0	**253**
09:30 - 09:44	0	0	5	17	83	86	48	22	7	1	0	0	0	0	0	**269**
09:45 - 09:59	0	1	0	18	83	77	64	22	4	1	0	0	0	0	0	**270**
10:00 - 10:14	0	1	2	25	93	94	40	9	4	1	0	0	0	0	0	**269**
10:15 - 10:29	0	2	12	29	70	78	28	17	4	0	1	0	0	0	0	**241**
10:30 - 10:44	0	1	4	23	71	93	48	17	7	0	0	0	0	0	0	**264**
10:45 - 10:59	0	0	4	44	86	81	33	16	2	1	0	0	0	0	0	**267**
11:00 - 11:14	0	0	6	46	100	81	47	9	1	0	1	0	0	0	0	**291**
11:15 - 11:29	0	0	3	34	85	80	44	11	5	0	0	0	0	0	0	**262**
11:30 - 11:44	0	2	2	25	78	70	49	18	2	2	0	0	0	0	0	**248**
11:45 - 11:59	0	1	6	11	82	80	47	28	2	0	0	0	0	0	0	**257**
12:00 - 12:14	0	1	11	39	76	65	48	16	4	0	0	0	0	0	0	**260**
12:15 - 12:29	0	0	0	34	99	72	47	25	2	3	0	0	0	0	0	**282**
12:30 - 12:44	0	0	10	23	76	59	64	24	2	0	0	0	0	0	0	**258**

Daily Westbound Speeds (MPH)

Study Date: Thursday, 09/20/2018
Unit ID: 0082
Location: W FLAGLER ST / W OF NW 69TH AVE

	0-5	5-10	10-15	15-20	20-25	25-30	30-35	35-40	40-45	45-50	50-55	55-60	60-65	65-70	70-75	Total
12:45 - 12:59	0	1	0	25	81	86	68	13	6	0	0	0	0	0	0	**280**
13:00 - 13:14	0	1	5	25	140	85	31	12	4	1	0	0	0	0	0	**304**
13:15 - 13:29	0	1	11	32	97	65	47	15	5	0	0	0	0	0	0	**273**
13:30 - 13:44	0	0	8	32	118	76	59	8	0	0	0	0	0	0	0	**301**
13:45 - 13:59	0	1	1	20	56	90	76	29	7	2	0	0	0	0	0	**282**
14:00 - 14:14	0	1	2	23	90	54	43	13	4	1	0	1	0	0	0	**232**
14:15 - 14:29	0	1	5	50	125	54	39	11	2	0	0	0	0	0	0	**287**
14:30 - 14:44	0	3	4	44	168	78	35	10	0	0	0	0	0	0	0	**342**
14:45 - 14:59	0	1	5	23	108	89	20	12	2	0	0	0	0	0	0	**260**
15:00 - 15:14	0	0	5	29	92	74	50	24	1	1	0	0	0	0	0	**276**
15:15 - 15:29	0	2	6	33	110	81	36	9	2	1	0	0	0	0	0	**280**
15:30 - 15:44	0	2	7	37	104	72	32	14	4	0	0	0	0	0	0	**272**
15:45 - 15:59	0	0	10	59	116	61	27	14	3	1	0	0	0	0	0	**291**
16:00 - 16:14	0	0	4	61	166	79	33	11	0	1	0	0	0	0	0	**355**
16:15 - 16:29	0	1	10	75	116	85	32	4	0	0	0	0	0	0	0	**323**
16:30 - 16:44	1	9	38	99	81	14	9	1	0	0	0	0	0	0	0	**252**
16:45 - 16:59	0	8	30	87	77	29	9	2	1	0	0	0	0	0	0	**243**
17:00 - 17:14	1	13	27	86	88	14	1	1	0	1	0	0	0	0	0	**232**
17:15 - 17:29	4	12	42	93	65	16	0	0	1	0	2	0	0	0	0	**235**
17:30 - 17:44	2	11	51	75	43	4	2	1	0	0	0	0	0	0	0	**189**
17:45 - 17:59	3	21	58	70	20	2	0	1	0	0	0	0	0	0	0	**175**
18:00 - 18:14	1	18	32	86	101	21	1	3	0	0	0	0	0	0	0	**263**
18:15 - 18:29	0	4	6	46	129	75	43	5	2	1	0	0	0	0	0	**311**
18:30 - 18:44	0	0	8	69	124	67	43	7	2	0	0	0	0	0	0	**320**
18:45 - 18:59	0	0	10	55	112	66	31	5	1	0	0	0	0	0	0	**280**
19:00 - 19:14	0	1	16	70	120	84	22	4	0	1	0	0	1	0	0	**319**
19:15 - 19:29	0	0	4	20	112	107	53	16	0	0	0	0	0	0	0	**312**
19:30 - 19:44	0	3	6	27	99	67	46	21	5	1	0	0	0	0	0	**275**
19:45 - 19:59	0	1	1	37	111	59	34	21	6	0	1	0	0	0	0	**271**
20:00 - 20:14	0	0	2	23	72	84	53	26	3	0	0	0	0	0	0	**263**
20:15 - 20:29	0	0	1	29	75	54	33	23	13	1	0	0	0	0	0	**229**
20:30 - 20:44	1	2	2	17	51	65	49	26	13	2	2	0	0	0	0	**230**
20:45 - 20:59	0	1	3	14	50	44	62	21	7	3	0	0	0	0	0	**205**
21:00 - 21:14	0	0	1	6	35	59	53	30	11	1	0	1	0	0	0	**197**
21:15 - 21:29	0	0	0	6	51	69	53	14	5	2	0	0	0	0	0	**200**
21:30 - 21:44	0	1	1	11	47	39	47	14	13	1	1	0	0	0	0	**175**
21:45 - 21:59	0	1	0	14	40	41	26	18	9	0	0	0	0	0	0	**149**
22:00 - 22:14	0	0	0	7	31	47	50	17	8	0	1	0	0	0	0	**161**
22:15 - 22:29	0	1	2	4	38	30	36	20	10	4	0	1	0	0	0	**146**
22:30 - 22:44	0	0	1	4	25	34	41	21	10	1	0	0	0	0	0	**137**
22:45 - 22:59	0	0	0	5	25	22	33	20	13	1	1	1	0	0	0	**121**
23:00 - 23:14	1	0	2	4	14	27	23	20	6	3	2	0	0	0	0	**102**
23:15 - 23:29	0	0	0	2	22	25	32	16	15	2	2	0	0	0	0	**116**
23:30 - 23:44	0	1	2	3	28	20	27	19	9	2	1	0	0	0	0	**112**
23:45 - 23:59	0	0	0	2	19	26	15	35	12	7	0	0	0	0	0	**116**
Totals	**16**	**144**	**559**	**2356**	**6009**	**4737**	**3028**	**1430**	**482**	**136**	**31**	**10**	**1**	**1**	**0**	**18940**
Percent of Total	**0.1**	**0.8**	**3.0**	**12.4**	**31.7**	**25.0**	**16.0**	**7.6**	**2.5**	**0.7**	**0.2**	**0.1**	**0.0**	**0.0**	**0.0**	**100**
Percent of AM	**0.0**	**0.3**	**1.5**	**8.3**	**29.1**	**28.2**	**17.6**	**9.9**	**3.5**	**1.2**	**0.2**	**0.1**	**0.0**	**0.0**	**0.0**	**100**
Percent of PM	**0.1**	**1.1**	**3.9**	**15.1**	**33.4**	**22.9**	**14.9**	**6.0**	**1.9**	**0.4**	**0.1**	**0.0**	**0.0**	**0.0**	**0.0**	**100**

Daily Westbound Speeds (MPH)

Study Date: Thursday, 09/20/2018
Unit ID: 0082
Location: W FLAGLER ST / W OF NW 69TH AVE

Standard Deviation:	7.3 MPH	Ten Mile Pace:	20 to 29 MPH	85th Percentile:	34.5 MPH
Mean Speed:	26.7 MPH	Percent in Ten Mile Pace:	56.7%	15th Percentile:	20.4 MPH
Median Speed:	25.5 MPH			90th Percentile:	35.8 MPH
Modal Speed:	23.0 MPH			95th Percentile:	39.8 MPH

Daily Eastbound Speeds (MPH)

Study Date: Tuesday, 09/18/2018
Unit ID: 0146
Location: SW 80TH ST / W OF SW 70TH AVE

	0-5	5-10	10-15	15-20	20-25	25-30	30-35	35-40	40-45	45-50	50-55	55-60	60-65	65-70	70-75	Total
00:00 - 00:14	0	0	0	0	0	2	2	2	0	0	0	0	0	0	0	**6**
00:15 - 00:29	0	0	0	0	0	4	2	0	0	0	0	0	0	0	0	**6**
00:30 - 00:44	0	0	0	0	0	1	1	1	0	0	0	0	0	0	0	**3**
00:45 - 00:59	0	0	0	0	2	2	1	0	0	0	0	0	0	0	0	**5**
01:00 - 01:14	0	0	0	0	1	0	1	2	1	0	0	0	0	0	0	**5**
01:15 - 01:29	0	0	0	0	2	0	0	1	0	0	0	0	0	0	0	**3**
01:30 - 01:44	0	0	0	0	0	1	3	0	0	0	0	1	0	0	0	**5**
01:45 - 01:59	0	0	0	0	0	2	0	0	0	0	0	0	0	0	0	**2**
02:00 - 02:14	0	0	1	0	0	1	0	0	1	0	0	0	0	0	0	**3**
02:15 - 02:29	0	0	0	0	0	1	0	0	0	0	0	0	0	0	0	**1**
02:30 - 02:44	0	0	0	0	0	1	1	0	0	0	0	0	0	0	0	**2**
02:45 - 02:59	0	0	0	0	1	0	1	0	0	0	0	0	0	0	0	**2**
03:00 - 03:14	0	0	0	0	2	1	0	0	0	0	0	0	0	0	0	**3**
03:15 - 03:29	0	0	0	0	3	1	0	0	0	0	0	0	0	0	0	**4**
03:30 - 03:44	0	0	0	0	0	2	2	0	0	1	0	0	0	0	0	**5**
03:45 - 03:59	0	0	0	0	1	2	1	0	0	0	0	0	0	0	0	**4**
04:00 - 04:14	0	0	0	0	0	1	1	1	0	0	0	0	0	0	0	**3**
04:15 - 04:29	0	0	0	0	1	2	1	0	1	0	0	0	0	0	0	**5**
04:30 - 04:44	0	0	0	0	0	2	3	2	0	0	0	0	0	0	0	**7**
04:45 - 04:59	0	1	0	1	1	0	0	0	1	0	0	0	0	0	0	**4**
05:00 - 05:14	0	0	0	0	1	5	2	1	0	0	0	0	0	0	0	**9**
05:15 - 05:29	0	0	0	2	5	2	7	5	1	0	0	0	0	0	0	**22**
05:30 - 05:44	0	0	0	1	2	2	8	4	3	0	0	0	0	0	0	**20**
05:45 - 05:59	0	0	1	1	8	12	9	3	1	1	0	0	0	0	0	**36**
06:00 - 06:14	0	0	3	7	9	9	6	3	1	0	0	0	0	0	0	**38**
06:15 - 06:29	1	3	7	6	19	10	11	8	0	0	0	0	0	0	0	**65**
06:30 - 06:44	1	3	11	10	23	15	9	2	0	0	0	0	0	0	0	**74**
06:45 - 06:59	0	10	15	23	31	27	17	2	1	0	0	0	0	0	0	**126**
07:00 - 07:14	0	9	26	23	17	26	15	3	1	0	0	0	0	0	0	**120**
07:15 - 07:29	0	18	14	29	45	11	3	0	0	0	0	0	0	0	0	**120**
07:30 - 07:44	6	12	21	43	48	3	1	0	0	0	0	0	0	0	0	**134**
07:45 - 07:59	0	19	33	52	32	8	0	1	0	0	0	0	0	0	0	**145**
08:00 - 08:14	1	20	31	38	8	1	1	0	0	0	0	0	0	0	0	**100**
08:15 - 08:29	0	18	13	41	29	6	4	1	0	0	0	0	0	0	0	**112**
08:30 - 08:44	0	16	23	32	38	17	9	0	0	0	0	0	0	0	0	**135**
08:45 - 08:59	1	13	21	40	52	19	1	0	0	0	0	0	0	0	0	**147**
09:00 - 09:14	1	14	30	30	24	1	0	0	0	0	0	0	0	0	0	**100**
09:15 - 09:29	0	7	8	18	23	20	12	2	0	0	0	0	0	0	0	**90**
09:30 - 09:44	1	7	10	23	15	17	9	1	1	0	0	0	0	0	0	**84**
09:45 - 09:59	1	10	13	15	14	14	9	5	0	0	0	0	0	0	0	**81**
10:00 - 10:14	0	2	2	2	14	13	12	5	0	0	0	0	0	0	0	**50**
10:15 - 10:29	0	4	9	15	19	13	6	0	0	0	0	0	0	0	0	**66**
10:30 - 10:44	0	2	2	7	10	17	7	3	0	0	0	0	0	0	0	**48**
10:45 - 10:59	0	1	6	13	12	15	9	1	0	0	0	0	0	0	0	**57**
11:00 - 11:14	1	3	5	14	12	10	3	0	0	1	0	0	0	0	0	**49**
11:15 - 11:29	0	3	3	9	7	13	5	7	0	0	0	0	0	0	0	**47**
11:30 - 11:44	0	0	4	7	9	11	7	2	1	0	0	0	0	0	0	**41**
11:45 - 11:59	0	0	3	11	14	16	4	2	1	0	0	0	0	0	0	**51**
12:00 - 12:14	1	3	6	15	15	16	9	2	0	0	0	0	0	0	0	**67**
12:15 - 12:29	3	4	9	3	17	12	4	3	0	0	0	1	0	0	0	**56**
12:30 - 12:44	0	1	10	14	13	9	4	5	0	0	0	0	0	0	0	**56**

Daily Eastbound Speeds (MPH)

Study Date: Tuesday, 09/18/2018
Unit ID: 0146
Location: SW 80TH ST / W OF SW 70TH AVE

	0-5	5-10	10-15	15-20	20-25	25-30	30-35	35-40	40-45	45-50	50-55	55-60	60-65	65-70	70-75	Total
12:45 - 12:59	0	4	7	17	18	6	3	1	0	0	0	0	0	0	0	**56**
13:00 - 13:14	1	2	6	8	14	12	5	0	0	0	0	0	0	0	0	**48**
13:15 - 13:29	0	6	5	15	10	9	6	1	0	0	0	0	0	0	0	**52**
13:30 - 13:44	0	4	7	14	14	6	5	3	0	0	0	0	0	0	0	**53**
13:45 - 13:59	0	5	8	8	13	14	6	3	0	0	0	0	0	0	0	**57**
14:00 - 14:14	0	1	5	7	14	17	8	5	0	0	0	0	0	0	0	**57**
14:15 - 14:29	2	6	12	7	13	8	2	0	0	0	0	0	0	0	0	**50**
14:30 - 14:44	0	3	6	13	15	16	10	1	0	0	0	0	0	0	0	**64**
14:45 - 14:59	0	4	12	12	11	14	9	4	0	0	0	0	0	0	0	**66**
15:00 - 15:14	0	5	7	15	31	12	5	4	0	1	0	0	0	0	0	**80**
15:15 - 15:29	1	10	8	11	15	11	2	2	0	0	0	0	0	0	0	**60**
15:30 - 15:44	0	7	14	14	24	8	5	0	0	0	0	0	0	0	0	**72**
15:45 - 15:59	0	5	16	16	10	9	4	1	0	0	0	0	0	0	0	**61**
16:00 - 16:14	3	3	10	18	9	14	3	1	0	0	0	0	0	0	0	**61**
16:15 - 16:29	2	3	7	11	19	18	4	2	0	0	0	0	0	0	0	**66**
16:30 - 16:44	0	5	11	16	19	16	8	1	0	0	0	0	0	0	0	**76**
16:45 - 16:59	0	5	8	21	14	8	6	3	0	0	0	0	0	0	0	**65**
17:00 - 17:14	0	9	9	13	21	8	8	2	0	0	0	0	0	0	0	**70**
17:15 - 17:29	1	6	14	14	11	10	3	0	0	0	0	0	0	0	0	**59**
17:30 - 17:44	0	3	6	17	13	5	11	2	0	0	0	0	0	0	0	**57**
17:45 - 17:59	1	8	10	17	22	23	6	2	0	0	0	0	0	0	0	**89**
18:00 - 18:14	0	11	9	14	16	6	10	0	0	0	0	0	0	0	0	**66**
18:15 - 18:29	0	10	11	16	20	11	5	0	0	0	0	0	0	0	0	**73**
18:30 - 18:44	0	4	7	16	12	10	3	3	0	0	0	0	0	0	0	**55**
18:45 - 18:59	0	2	5	11	11	9	4	3	0	0	0	0	0	0	0	**45**
19:00 - 19:14	0	5	9	6	9	11	3	0	0	0	0	0	0	0	0	**43**
19:15 - 19:29	0	1	4	13	13	11	3	2	0	0	0	0	0	0	0	**47**
19:30 - 19:44	0	1	2	5	11	8	5	1	0	0	0	0	0	0	0	**33**
19:45 - 19:59	0	0	9	10	13	9	3	1	0	0	0	0	0	0	0	**45**
20:00 - 20:14	2	2	10	12	10	5	5	0	0	1	0	0	0	0	0	**47**
20:15 - 20:29	0	4	3	2	11	7	3	4	2	0	0	0	0	0	0	**36**
20:30 - 20:44	0	3	3	13	5	9	5	1	0	0	0	0	0	0	0	**39**
20:45 - 20:59	0	0	3	2	8	4	5	3	1	0	0	0	0	0	0	**26**
21:00 - 21:14	0	0	4	4	18	4	4	1	0	0	0	0	0	0	0	**35**
21:15 - 21:29	0	0	0	3	8	3	4	2	0	0	0	0	0	0	0	**20**
21:30 - 21:44	0	0	0	4	12	10	3	1	0	0	0	0	0	0	0	**30**
21:45 - 21:59	0	0	1	1	7	5	6	2	0	0	0	0	0	0	0	**22**
22:00 - 22:14	0	0	0	1	3	3	5	2	1	0	0	0	0	0	0	**15**
22:15 - 22:29	0	0	0	0	6	5	5	1	1	0	0	0	0	0	0	**18**
22:30 - 22:44	0	0	1	3	0	3	1	3	1	0	0	0	0	0	0	**12**
22:45 - 22:59	0	0	0	0	2	7	3	1	1	0	0	0	0	0	0	**14**
23:00 - 23:14	0	0	0	3	2	2	4	2	1	1	0	0	0	0	0	**15**
23:15 - 23:29	0	0	0	0	1	3	2	3	0	0	0	0	0	0	0	**9**
23:30 - 23:44	0	0	0	2	1	1	3	1	0	0	0	0	0	0	0	**8**
23:45 - 23:59	0	0	0	0	0	1	3	2	0	0	0	0	0	0	0	**6**
Totals	**31**	**350**	**609**	**970**	**1128**	**787**	**439**	**157**	**23**	**6**	**0**	**2**	**0**	**0**	**0**	**4502**
Percent of Total	**0.7**	**7.8**	**13.5**	**21.5**	**25.1**	**17.5**	**9.8**	**3.5**	**0.5**	**0.1**	**0.0**	**0.0**	**0.0**	**0.0**	**0.0**	**100**
Percent of AM	**0.6**	**8.7**	**14.0**	**22.9**	**24.7**	**16.0**	**9.2**	**3.1**	**0.7**	**0.1**	**0.0**	**0.0**	**0.0**	**0.0**	**0.0**	**100**
Percent of PM	**0.8**	**6.9**	**13.0**	**20.2**	**25.4**	**19.0**	**10.3**	**3.9**	**0.4**	**0.1**	**0.0**	**0.0**	**0.0**	**0.0**	**0.0**	**100**

Daily Eastbound Speeds (MPH)

Study Date: Tuesday, 09/18/2018
Unit ID: 0146
Location: SW 80TH ST / W OF SW 70TH AVE

Standard Deviation:	8.1 MPH	Ten Mile Pace:	15 to 24 MPH	85th Percentile:	30.6 MPH
Mean Speed:	21.8 MPH	Percent in Ten Mile Pace:	46.6%	15th Percentile:	12.9 MPH
Median Speed:	21.5 MPH			90th Percentile:	32.4 MPH
Modal Speed:	23.0 MPH			95th Percentile:	35.5 MPH

Daily Eastbound Speeds (MPH)

Study Date: Wednesday, 09/19/2018
Unit ID: 0146
Location: SW 80TH ST / W OF SW 70TH AVE

	0-5	5-10	10-15	15-20	20-25	25-30	30-35	35-40	40-45	45-50	50-55	55-60	60-65	65-70	70-75	Total
00:00 - 00:14	0	0	0	0	0	1	2	1	0	0	0	0	0	0	0	**4**
00:15 - 00:29	0	0	0	0	3	1	0	1	0	0	0	0	0	0	0	**5**
00:30 - 00:44	0	0	0	0	0	0	2	1	0	0	0	0	0	0	0	**3**
00:45 - 00:59	0	0	0	0	1	1	1	0	0	0	0	0	0	0	0	**3**
01:00 - 01:14	0	0	0	0	1	1	1	1	0	0	0	0	0	0	0	**4**
01:15 - 01:29	0	0	0	0	1	0	0	0	0	0	0	0	0	0	0	**1**
01:30 - 01:44	0	0	1	0	2	0	1	0	0	0	0	0	0	0	0	**4**
01:45 - 01:59	0	0	0	0	2	1	0	1	0	0	0	0	0	0	0	**4**
02:00 - 02:14	0	0	0	0	2	0	2	0	0	0	0	0	0	0	0	**4**
02:15 - 02:29	0	0	0	0	1	2	0	0	0	0	0	0	0	0	0	**3**
02:30 - 02:44	0	0	0	0	1	0	0	0	0	0	0	0	0	0	0	**1**
02:45 - 02:59	0	0	0	0	0	1	1	0	0	0	0	0	0	0	0	**2**
03:00 - 03:14	0	0	0	0	0	0	0	0	0	0	0	0	0	0	0	**0**
03:15 - 03:29	0	0	0	0	3	0	0	0	0	0	0	0	0	0	0	**3**
03:30 - 03:44	0	0	0	3	2	1	0	0	0	0	0	0	0	0	0	**6**
03:45 - 03:59	0	0	0	0	0	3	0	1	0	0	0	0	0	0	0	**4**
04:00 - 04:14	0	0	0	0	0	0	1	0	0	0	0	0	0	0	0	**1**
04:15 - 04:29	0	0	0	1	0	3	0	0	0	0	0	0	0	0	0	**4**
04:30 - 04:44	0	0	0	0	3	2	2	1	0	0	0	0	0	0	0	**8**
04:45 - 04:59	0	0	0	0	1	2	2	0	0	0	0	0	0	0	0	**5**
05:00 - 05:14	0	0	1	1	2	1	4	2	0	0	0	0	0	0	0	**11**
05:15 - 05:29	0	0	0	1	2	4	8	4	0	1	0	0	0	0	0	**20**
05:30 - 05:44	0	0	1	2	1	6	2	5	2	0	0	0	0	0	0	**19**
05:45 - 05:59	0	0	0	1	5	14	5	2	2	0	0	0	0	0	0	**29**
06:00 - 06:14	0	1	1	4	6	12	9	2	0	1	0	0	0	0	0	**36**
06:15 - 06:29	0	1	1	3	11	18	14	5	2	0	0	0	0	0	0	**55**
06:30 - 06:44	1	1	5	18	16	10	14	10	1	0	0	0	0	0	0	**76**
06:45 - 06:59	2	11	11	15	22	29	17	2	0	0	1	0	0	0	0	**110**
07:00 - 07:14	0	11	13	18	36	19	18	3	1	0	0	0	0	0	0	**119**
07:15 - 07:29	0	12	16	31	35	29	14	2	0	0	0	0	0	0	0	**139**
07:30 - 07:44	0	8	17	32	51	17	12	1	0	0	0	0	0	0	0	**138**
07:45 - 07:59	0	12	15	40	32	22	10	0	0	0	0	0	0	0	0	**131**
08:00 - 08:14	0	13	19	26	54	21	7	2	0	0	0	0	0	0	0	**142**
08:15 - 08:29	2	11	22	19	36	18	11	0	0	0	0	0	0	0	0	**119**
08:30 - 08:44	1	15	28	53	42	4	0	0	0	0	0	0	0	0	0	**143**
08:45 - 08:59	0	15	21	41	54	10	5	0	0	0	0	0	0	0	0	**146**
09:00 - 09:14	2	9	18	21	31	20	11	2	1	0	0	0	0	0	0	**115**
09:15 - 09:29	2	3	11	14	22	27	13	4	0	0	0	0	0	0	0	**96**
09:30 - 09:44	0	3	9	13	25	18	8	6	1	0	0	0	0	0	0	**83**
09:45 - 09:59	0	7	9	16	13	21	16	0	0	0	0	0	0	0	0	**82**
10:00 - 10:14	0	8	6	8	15	11	6	1	0	0	0	0	0	0	0	**55**
10:15 - 10:29	0	6	9	12	10	18	7	4	0	0	0	0	0	0	0	**66**
10:30 - 10:44	2	4	7	15	14	5	4	1	1	0	0	0	0	0	0	**53**
10:45 - 10:59	0	3	12	13	11	9	4	1	0	0	0	0	0	0	0	**53**
11:00 - 11:14	0	8	10	11	14	13	3	2	0	0	0	0	0	0	0	**61**
11:15 - 11:29	0	0	9	9	6	1	10	3	0	1	0	0	0	0	0	**39**
11:30 - 11:44	0	6	8	12	10	5	3	2	0	1	0	0	0	0	0	**47**
11:45 - 11:59	0	7	8	9	17	11	2	1	0	0	0	0	0	0	0	**55**
12:00 - 12:14	1	5	11	20	17	11	3	1	0	0	0	0	0	0	0	**69**
12:15 - 12:29	0	7	11	14	9	8	10	2	0	0	0	0	0	0	0	**61**
12:30 - 12:44	1	4	6	10	19	5	6	0	0	0	0	0	0	0	0	**51**

Daily Eastbound Speeds (MPH)

Study Date: Wednesday, 09/19/2018
Unit ID: 0146
Location: SW 80TH ST / W OF SW 70TH AVE

	0-5	5-10	10-15	15-20	20-25	25-30	30-35	35-40	40-45	45-50	50-55	55-60	60-65	65-70	70-75	Total
12:45 - 12:59	1	6	5	8	12	9	3	2	1	0	0	0	0	0	0	**47**
13:00 - 13:14	1	6	20	23	14	5	5	1	0	0	0	0	0	0	0	**75**
13:15 - 13:29	1	5	11	14	22	7	1	1	1	0	0	0	0	0	0	**63**
13:30 - 13:44	1	5	7	9	12	10	1	0	0	0	0	0	0	0	0	**45**
13:45 - 13:59	1	6	7	13	15	6	7	0	0	0	0	0	0	0	1	**56**
14:00 - 14:14	0	1	5	14	15	7	10	0	1	0	0	0	0	0	0	**53**
14:15 - 14:29	1	5	10	9	14	11	1	1	0	0	0	0	0	0	0	**52**
14:30 - 14:44	0	9	12	19	11	6	2	1	0	0	0	0	0	0	0	**60**
14:45 - 14:59	0	5	18	18	16	10	4	1	0	0	0	0	0	0	0	**72**
15:00 - 15:14	0	8	9	13	21	10	5	1	0	0	0	0	0	0	0	**67**
15:15 - 15:29	0	4	11	9	22	13	5	2	0	0	0	0	0	0	0	**66**
15:30 - 15:44	0	7	8	13	19	13	3	1	0	0	0	0	0	0	0	**64**
15:45 - 15:59	0	8	8	6	12	5	8	0	0	0	0	0	0	0	0	**47**
16:00 - 16:14	0	5	8	14	11	4	5	2	0	0	0	0	0	0	0	**49**
16:15 - 16:29	0	3	9	11	14	15	6	1	0	0	0	0	0	0	0	**59**
16:30 - 16:44	1	7	13	11	11	11	3	1	0	0	0	0	0	0	0	**58**
16:45 - 16:59	11	4	10	7	20	11	2	3	1	1	0	0	0	0	0	**70**
17:00 - 17:14	0	4	7	14	15	10	11	5	0	0	0	0	0	0	0	**66**
17:15 - 17:29	1	10	9	13	13	12	8	2	0	0	0	0	0	0	0	**68**
17:30 - 17:44	0	5	10	13	14	12	9	3	0	0	0	0	0	0	0	**66**
17:45 - 17:59	1	7	5	12	19	15	5	0	0	0	0	0	0	0	0	**64**
18:00 - 18:14	0	10	7	14	19	7	10	4	1	0	0	0	0	0	0	**72**
18:15 - 18:29	0	6	9	14	10	10	3	2	0	0	1	0	0	0	0	**55**
18:30 - 18:44	0	4	8	9	17	12	5	1	1	0	0	0	0	0	0	**57**
18:45 - 18:59	0	3	7	7	12	12	6	1	1	0	0	0	0	0	0	**49**
19:00 - 19:14	0	3	5	13	12	10	4	2	0	0	0	0	0	0	0	**49**
19:15 - 19:29	2	5	9	10	10	14	4	2	0	0	0	0	0	0	0	**56**
19:30 - 19:44	1	0	10	9	10	4	3	4	0	0	0	0	0	0	0	**41**
19:45 - 19:59	0	1	6	6	8	13	7	2	0	0	0	0	0	0	0	**43**
20:00 - 20:14	0	2	1	9	14	10	2	2	1	0	0	0	0	0	0	**41**
20:15 - 20:29	0	1	2	10	7	12	13	2	0	0	0	0	0	0	0	**47**
20:30 - 20:44	0	3	5	2	7	10	3	1	0	0	0	0	0	0	0	**31**
20:45 - 20:59	0	0	5	5	7	10	4	1	0	0	0	0	0	0	0	**32**
21:00 - 21:14	0	0	3	6	8	5	2	1	0	0	0	0	0	0	0	**25**
21:15 - 21:29	0	0	0	4	14	6	5	0	0	0	0	0	0	0	0	**29**
21:30 - 21:44	0	0	1	6	7	6	7	2	0	0	0	0	0	0	0	**29**
21:45 - 21:59	0	0	1	7	4	3	3	1	0	0	1	0	0	0	0	**20**
22:00 - 22:14	0	0	1	4	6	3	4	0	0	0	0	0	0	0	0	**18**
22:15 - 22:29	0	0	0	1	1	5	7	0	1	0	0	0	0	0	0	**15**
22:30 - 22:44	0	0	0	4	6	5	4	1	0	1	0	0	0	0	0	**21**
22:45 - 22:59	0	0	0	0	4	3	2	0	0	0	0	0	0	0	0	**9**
23:00 - 23:14	0	0	1	2	0	0	4	2	0	0	0	0	0	0	0	**9**
23:15 - 23:29	0	0	0	2	4	2	2	2	0	0	0	0	0	0	0	**12**
23:30 - 23:44	0	0	0	1	1	3	5	0	0	0	0	0	0	0	0	**10**
23:45 - 23:59	0	0	0	0	1	1	1	1	0	0	0	0	0	0	0	**4**
Totals	**37**	**349**	**599**	**914**	**1172**	**804**	**485**	**139**	**20**	**6**	**3**	**0**	**0**	**0**	**1**	**4529**
Percent of Total	**0.8**	**7.7**	**13.2**	**20.2**	**25.9**	**17.8**	**10.7**	**3.1**	**0.4**	**0.1**	**0.1**	**0.0**	**0.0**	**0.0**	**0.0**	**100**
Percent of AM	**0.5**	**7.6**	**12.5**	**20.0**	**26.7**	**17.9**	**10.9**	**3.2**	**0.5**	**0.2**	**0.0**	**0.0**	**0.0**	**0.0**	**0.0**	**100**
Percent of PM	**1.1**	**7.8**	**14.0**	**20.3**	**25.0**	**17.6**	**10.5**	**2.9**	**0.4**	**0.1**	**0.1**	**0.0**	**0.0**	**0.0**	**0.0**	**100**

Daily Eastbound Speeds (MPH)

Study Date: Wednesday, 09/19/2018
Unit ID: 0146
Location: SW 80TH ST / W OF SW 70TH AVE

Standard Deviation:	8.2 MPH	Ten Mile Pace:	15 to 24 MPH	85th Percentile:	30.8 MPH
Mean Speed:	21.9 MPH	Percent in Ten Mile Pace:	46.1%		
Median Speed:	21.9 MPH			15th Percentile:	12.9 MPH
Modal Speed:	23.0 MPH			90th Percentile:	32.5 MPH
				95th Percentile:	35.3 MPH

Daily Eastbound Speeds (MPH)

Study Date: Thursday, 09/20/2018
Unit ID: 0146
Location: SW 80TH ST / W OF SW 70TH AVE

	0-5	5-10	10-15	15-20	20-25	25-30	30-35	35-40	40-45	45-50	50-55	55-60	60-65	65-70	70-75	Total
00:00 - 00:14	0	0	0	2	1	3	1	1	0	0	0	0	0	0	0	**8**
00:15 - 00:29	0	0	0	1	0	1	2	0	1	0	0	0	0	0	0	**5**
00:30 - 00:44	0	0	0	0	1	0	3	0	0	0	0	0	0	0	0	**4**
00:45 - 00:59	0	0	0	0	1	0	0	0	0	0	0	0	0	0	0	**1**
01:00 - 01:14	0	0	0	2	1	2	2	1	0	0	0	0	0	0	0	**8**
01:15 - 01:29	0	0	0	0	0	0	1	0	1	0	0	0	0	0	0	**2**
01:30 - 01:44	0	0	0	0	0	1	2	0	0	0	0	0	0	0	0	**3**
01:45 - 01:59	0	0	0	0	0	3	0	1	0	0	0	0	0	0	0	**4**
02:00 - 02:14	0	0	0	0	0	1	2	1	0	0	0	0	0	0	0	**4**
02:15 - 02:29	0	0	0	1	0	0	1	0	0	0	0	0	0	0	0	**2**
02:30 - 02:44	0	0	0	0	0	1	0	1	0	0	0	0	0	0	0	**2**
02:45 - 02:59	0	0	0	0	0	1	0	0	1	0	0	0	0	0	0	**2**
03:00 - 03:14	0	0	0	0	0	0	1	0	0	0	0	0	0	0	0	**1**
03:15 - 03:29	0	0	0	0	2	0	0	0	0	0	0	0	0	0	0	**2**
03:30 - 03:44	0	0	0	0	0	2	1	0	0	0	0	0	0	0	0	**3**
03:45 - 03:59	0	0	0	0	1	1	0	0	0	0	0	0	0	0	0	**2**
04:00 - 04:14	0	0	0	0	0	0	1	0	0	0	0	0	0	0	0	**1**
04:15 - 04:29	0	0	0	0	0	3	1	1	0	0	0	0	0	0	0	**5**
04:30 - 04:44	0	0	0	0	3	2	1	1	0	0	0	0	0	0	0	**7**
04:45 - 04:59	0	0	0	0	1	1	3	1	0	0	0	0	0	0	0	**6**
05:00 - 05:14	0	0	0	0	3	1	2	1	0	0	0	0	0	0	0	**7**
05:15 - 05:29	0	0	0	2	3	2	9	3	4	0	0	0	0	0	0	**23**
05:30 - 05:44	0	0	0	1	1	4	10	2	0	0	0	0	0	0	0	**18**
05:45 - 05:59	0	0	1	3	3	8	9	5	2	0	0	0	0	0	0	**31**
06:00 - 06:14	1	1	3	8	15	6	9	8	0	0	0	0	0	0	0	**51**
06:15 - 06:29	0	3	5	13	16	11	7	3	0	0	0	0	0	0	0	**58**
06:30 - 06:44	0	3	11	12	11	25	11	4	1	0	0	0	0	0	0	**78**
06:45 - 06:59	0	5	15	11	30	29	16	5	1	1	0	0	0	0	0	**113**
07:00 - 07:14	0	11	17	25	48	23	12	5	2	0	0	0	0	0	0	**143**
07:15 - 07:29	0	15	18	37	45	11	5	3	1	0	0	0	0	0	0	**135**
07:30 - 07:44	0	15	15	49	44	9	0	0	0	0	0	0	0	0	0	**132**
07:45 - 07:59	2	11	19	23	45	15	4	0	0	0	0	0	0	0	0	**119**
08:00 - 08:14	1	12	20	28	52	17	5	0	0	0	0	0	0	0	0	**135**
08:15 - 08:29	0	12	27	41	43	13	2	0	0	0	0	0	0	0	0	**138**
08:30 - 08:44	0	9	19	32	27	17	10	1	0	0	0	0	0	0	0	**115**
08:45 - 08:59	2	10	17	38	36	10	10	1	0	0	0	0	0	0	0	**124**
09:00 - 09:14	0	9	13	25	17	9	8	7	0	0	0	0	0	0	0	**88**
09:15 - 09:29	0	5	7	13	14	29	19	3	1	0	0	0	0	0	0	**91**
09:30 - 09:44	1	5	12	13	14	10	13	1	0	0	0	0	0	0	0	**69**
09:45 - 09:59	0	5	11	19	18	15	10	3	0	0	0	0	0	0	0	**81**
10:00 - 10:14	0	3	9	10	13	17	9	5	1	0	0	0	0	0	0	**67**
10:15 - 10:29	0	4	5	7	22	11	10	0	0	0	0	0	0	0	0	**59**
10:30 - 10:44	0	2	5	9	22	13	9	4	0	0	0	0	0	0	0	**64**
10:45 - 10:59	0	3	4	9	11	18	11	5	0	0	0	0	0	0	0	**61**
11:00 - 11:14	1	4	7	8	10	14	6	0	1	0	0	0	0	0	0	**51**
11:15 - 11:29	0	1	5	10	13	10	8	2	1	0	0	0	0	0	0	**50**
11:30 - 11:44	0	2	4	7	18	14	9	1	0	0	0	0	0	0	0	**55**
11:45 - 11:59	0	1	9	13	18	8	7	3	0	0	0	0	0	0	0	**59**
12:00 - 12:14	0	5	7	11	17	10	4	1	0	0	0	0	0	0	0	**55**
12:15 - 12:29	0	3	3	7	14	10	7	1	0	0	0	0	0	0	0	**45**
12:30 - 12:44	1	1	3	12	20	7	3	2	0	0	0	0	0	0	0	**49**

Daily Eastbound Speeds (MPH)

Study Date: Thursday, 09/20/2018
Unit ID: 0146
Location: SW 80TH ST / W OF SW 70TH AVE

	0-5	5-10	10-15	15-20	20-25	25-30	30-35	35-40	40-45	45-50	50-55	55-60	60-65	65-70	70-75	Total
12:45 - 12:59	0	3	7	15	12	10	5	1	0	0	0	0	0	0	0	**53**
13:00 - 13:14	0	6	8	13	22	10	0	0	0	0	0	0	0	0	0	**59**
13:15 - 13:29	0	1	7	7	19	14	10	1	0	0	0	0	0	0	0	**59**
13:30 - 13:44	0	3	6	15	14	9	11	1	0	0	0	0	0	0	0	**59**
13:45 - 13:59	1	11	10	14	13	5	3	0	0	0	0	0	0	0	0	**57**
14:00 - 14:14	1	3	6	13	9	9	3	2	0	0	0	0	0	0	0	**46**
14:15 - 14:29	0	4	7	12	21	14	5	0	0	0	0	0	0	0	0	**63**
14:30 - 14:44	0	6	6	18	11	16	3	4	0	0	0	0	0	0	0	**64**
14:45 - 14:59	0	6	11	20	20	14	10	0	0	0	0	0	0	0	0	**81**
15:00 - 15:14	0	7	6	12	12	16	5	1	0	0	0	0	0	0	0	**59**
15:15 - 15:29	0	8	10	11	20	11	5	1	0	0	0	0	0	0	0	**66**
15:30 - 15:44	1	4	12	19	24	11	2	0	0	0	0	0	0	0	0	**73**
15:45 - 15:59	1	2	11	10	20	22	8	2	0	0	0	0	0	0	0	**76**
16:00 - 16:14	0	1	8	12	17	17	4	2	0	0	0	0	0	0	0	**61**
16:15 - 16:29	1	7	10	13	19	12	4	0	0	0	0	0	0	0	0	**66**
16:30 - 16:44	1	3	13	14	22	14	5	0	0	0	0	0	0	0	0	**72**
16:45 - 16:59	0	4	3	9	16	16	5	3	0	0	0	0	0	0	0	**56**
17:00 - 17:14	1	7	16	12	19	16	7	2	0	0	0	0	0	0	0	**80**
17:15 - 17:29	1	4	11	7	15	15	8	1	0	0	0	0	0	0	0	**62**
17:30 - 17:44	0	7	9	11	13	14	6	2	0	0	0	0	0	0	0	**62**
17:45 - 17:59	0	6	11	16	16	19	4	1	0	0	0	0	0	0	0	**73**
18:00 - 18:14	0	9	14	17	19	14	8	1	0	0	0	0	0	0	0	**82**
18:15 - 18:29	1	5	13	10	18	10	6	2	0	0	0	0	0	0	0	**65**
18:30 - 18:44	0	3	8	12	11	15	15	2	0	0	0	0	0	0	0	**66**
18:45 - 18:59	0	2	7	12	8	15	1	0	0	0	0	0	0	0	0	**45**
19:00 - 19:14	0	0	5	9	11	12	4	1	1	0	0	0	0	0	0	**43**
19:15 - 19:29	0	2	7	9	15	6	3	1	0	0	0	0	0	0	0	**43**
19:30 - 19:44	0	0	15	8	7	4	5	1	0	0	0	0	0	0	0	**40**
19:45 - 19:59	0	2	10	6	12	7	6	3	0	0	0	0	0	0	0	**46**
20:00 - 20:14	0	2	4	7	8	4	5	1	0	0	0	0	0	0	0	**31**
20:15 - 20:29	0	5	5	11	14	3	7	4	1	0	0	0	0	0	0	**50**
20:30 - 20:44	0	1	4	5	12	8	7	3	0	0	0	0	0	0	0	**40**
20:45 - 20:59	0	0	2	9	4	5	4	1	0	0	0	0	0	0	0	**25**
21:00 - 21:14	0	0	3	7	5	2	3	2	0	0	0	0	0	0	0	**22**
21:15 - 21:29	0	1	3	3	13	12	2	0	0	0	0	0	0	0	0	**34**
21:30 - 21:44	0	0	0	1	9	3	5	0	0	0	0	0	0	0	0	**18**
21:45 - 21:59	0	2	0	1	6	4	8	1	0	0	0	0	0	0	0	**22**
22:00 - 22:14	0	0	0	1	4	4	3	0	0	0	0	0	0	0	0	**12**
22:15 - 22:29	0	0	3	2	2	6	1	0	0	0	0	0	0	0	0	**14**
22:30 - 22:44	0	0	1	3	1	4	2	1	0	0	0	0	0	0	0	**12**
22:45 - 22:59	0	0	0	0	1	3	0	0	0	0	0	0	0	0	0	**4**
23:00 - 23:14	0	0	0	1	3	1	4	0	0	0	0	0	0	0	0	**9**
23:15 - 23:29	0	0	0	0	2	1	1	1	0	0	0	0	0	0	0	**5**
23:30 - 23:44	0	0	0	0	2	2	2	0	0	0	0	0	0	0	0	**6**
23:45 - 23:59	0	0	0	1	1	0	7	0	0	0	0	0	0	0	0	**9**
Totals	**18**	**297**	**583**	**910**	**1216**	**847**	**498**	**136**	**20**	**1**	**0**	**0**	**0**	**0**	**0**	**4526**
Percent of Total	**0.4**	**6.6**	**12.9**	**20.1**	**26.9**	**18.7**	**11.0**	**3.0**	**0.4**	**0.0**	**0.0**	**0.0**	**0.0**	**0.0**	**0.0**	**100**
Percent of AM	**0.3**	**6.6**	**12.2**	**20.6**	**27.2**	**17.1**	**11.5**	**3.6**	**0.8**	**0.0**	**0.0**	**0.0**	**0.0**	**0.0**	**0.0**	**100**
Percent of PM	**0.4**	**6.5**	**13.6**	**19.6**	**26.5**	**20.4**	**10.5**	**2.4**	**0.1**	**0.0**	**0.0**	**0.0**	**0.0**	**0.0**	**0.0**	**100**

Daily Eastbound Speeds (MPH)

Study Date: Thursday, 09/20/2018
Unit ID: 0146
Location: SW 80TH ST / W OF SW 70TH AVE

Standard Deviation:	7.8 MPH	Ten Mile Pace:	15 to 24 MPH	85th Percentile:	30.8 MPH
Mean Speed:	22.2 MPH	Percent in Ten Mile Pace:	47.0%		
Median Speed:	22.2 MPH			15th Percentile:	13.7 MPH
Modal Speed:	23.0 MPH			90th Percentile:	32.4 MPH
				95th Percentile:	35.2 MPH

Daily Westbound Speeds (MPH)

Study Date: Tuesday, 09/18/2018
Unit ID: 0204
Location: SW 80TH ST / W OF SW 70TH AVE

	0-5	5-10	10-15	15-20	20-25	25-30	30-35	35-40	40-45	45-50	50-55	55-60	60-65	65-70	70-75	Total
00:00 - 00:14	0	0	0	0	1	2	2	0	0	0	0	0	0	0	0	**5**
00:15 - 00:29	0	0	0	1	4	0	1	2	0	1	0	0	0	0	0	**9**
00:30 - 00:44	0	0	0	2	2	2	4	1	1	0	0	0	0	0	0	**12**
00:45 - 00:59	0	0	0	0	1	0	1	0	1	1	0	0	0	0	0	**4**
01:00 - 01:14	0	0	0	0	2	3	1	0	0	0	0	0	0	0	0	**6**
01:15 - 01:29	0	0	0	0	0	0	2	0	1	0	0	0	0	0	0	**3**
01:30 - 01:44	0	0	0	1	0	0	1	0	1	0	0	0	0	0	0	**3**
01:45 - 01:59	0	0	0	0	0	0	2	0	1	0	0	0	0	0	1	**4**
02:00 - 02:14	0	0	0	0	1	1	2	2	0	0	0	0	0	0	0	**6**
02:15 - 02:29	0	0	0	0	1	2	0	0	1	0	0	0	0	0	0	**4**
02:30 - 02:44	0	0	0	0	1	0	0	0	1	0	0	0	0	0	0	**2**
02:45 - 02:59	0	0	0	0	0	1	0	0	0	0	0	0	0	0	0	**1**
03:00 - 03:14	0	0	0	0	0	0	1	1	0	0	0	1	0	0	0	**3**
03:15 - 03:29	0	0	0	0	0	0	0	0	0	1	0	0	0	0	0	**1**
03:30 - 03:44	0	0	0	0	0	0	0	1	0	0	0	0	0	1	0	**2**
03:45 - 03:59	0	0	0	0	0	0	0	2	0	1	0	0	0	0	0	**3**
04:00 - 04:14	0	0	0	0	0	0	0	0	0	0	0	0	0	0	0	**0**
04:15 - 04:29	0	0	0	0	0	0	0	1	1	0	0	0	0	0	0	**2**
04:30 - 04:44	0	0	0	0	2	1	0	1	1	0	0	0	0	0	0	**5**
04:45 - 04:59	0	0	0	0	1	0	1	0	0	0	0	0	0	0	0	**2**
05:00 - 05:14	0	0	0	0	1	0	0	1	1	0	0	0	0	0	0	**3**
05:15 - 05:29	0	0	0	1	2	0	0	1	0	0	0	0	0	0	0	**4**
05:30 - 05:44	0	0	0	1	1	0	1	2	1	1	0	0	0	0	0	**7**
05:45 - 05:59	0	0	0	2	1	0	2	2	1	0	0	0	0	0	0	**8**
06:00 - 06:14	0	0	0	2	12	2	2	0	1	0	0	0	0	0	0	**19**
06:15 - 06:29	0	0	0	4	14	8	2	2	0	0	1	1	0	0	0	**32**
06:30 - 06:44	0	0	2	7	13	13	7	4	1	0	0	0	0	0	0	**47**
06:45 - 06:59	0	0	0	5	16	13	6	9	1	1	0	0	0	0	0	**51**
07:00 - 07:14	0	0	0	5	20	11	12	7	3	2	0	0	0	0	0	**60**
07:15 - 07:29	0	0	0	3	11	14	7	7	1	0	0	0	0	0	0	**43**
07:30 - 07:44	0	0	0	3	18	15	7	5	1	0	0	0	0	0	0	**49**
07:45 - 07:59	0	0	0	1	20	22	7	8	4	0	0	0	0	0	0	**62**
08:00 - 08:14	0	0	0	2	18	17	12	10	1	0	0	0	0	0	0	**60**
08:15 - 08:29	0	1	0	5	27	26	18	13	3	0	1	0	0	0	0	**94**
08:30 - 08:44	0	0	0	3	13	26	7	8	2	0	0	0	0	0	0	**59**
08:45 - 08:59	0	0	0	6	22	17	8	5	1	0	0	0	0	0	0	**59**
09:00 - 09:14	0	0	0	5	22	9	12	11	1	0	0	0	0	0	0	**60**
09:15 - 09:29	0	0	0	3	16	9	7	8	4	0	0	0	0	0	0	**47**
09:30 - 09:44	0	0	0	4	22	20	4	11	1	0	0	0	0	0	0	**62**
09:45 - 09:59	0	0	0	3	16	15	4	5	1	0	0	0	0	0	0	**44**
10:00 - 10:14	0	0	0	1	22	11	10	6	5	0	0	0	0	0	0	**55**
10:15 - 10:29	0	0	0	4	23	14	16	3	4	0	0	0	0	0	0	**64**
10:30 - 10:44	0	0	0	5	11	16	14	7	2	0	0	0	0	0	0	**55**
10:45 - 10:59	0	0	0	7	23	18	6	5	0	2	0	0	0	0	0	**61**
11:00 - 11:14	0	0	0	8	20	21	6	7	1	0	0	0	0	0	0	**63**
11:15 - 11:29	0	0	1	5	23	16	16	6	0	0	0	0	0	0	0	**67**
11:30 - 11:44	0	0	0	2	13	17	10	7	3	1	0	0	0	0	0	**53**
11:45 - 11:59	0	0	1	4	14	5	13	13	2	0	1	0	0	0	0	**53**
12:00 - 12:14	0	0	0	5	29	20	9	13	0	0	0	0	0	0	0	**76**
12:15 - 12:29	0	0	0	7	17	13	17	11	1	3	0	0	0	0	0	**69**
12:30 - 12:44	0	0	0	7	24	23	25	2	5	0	0	0	0	0	0	**86**

Daily Westbound Speeds (MPH)

Study Date: Tuesday, 09/18/2018
Unit ID: 0204
Location: SW 80TH ST / W OF SW 70TH AVE

	0-5	5-10	10-15	15-20	20-25	25-30	30-35	35-40	40-45	45-50	50-55	55-60	60-65	65-70	70-75	Total
12:45 - 12:59	0	0	0	7	37	23	4	10	3	2	0	0	0	0	0	**86**
13:00 - 13:14	0	0	0	8	39	25	15	8	2	1	0	0	0	0	0	**98**
13:15 - 13:29	0	0	0	6	39	25	14	5	0	1	0	0	0	0	0	**90**
13:30 - 13:44	0	0	0	12	36	18	14	6	2	0	0	0	0	0	0	**88**
13:45 - 13:59	0	0	0	10	29	32	19	9	1	1	0	0	0	0	0	**101**
14:00 - 14:14	0	0	0	7	26	26	17	10	3	0	1	0	0	0	0	**90**
14:15 - 14:29	0	0	0	5	36	31	13	7	3	0	0	0	0	0	0	**95**
14:30 - 14:44	0	0	1	7	25	26	16	15	3	1	0	0	0	0	0	**94**
14:45 - 14:59	0	0	1	11	28	26	16	16	5	1	0	0	0	0	0	**104**
15:00 - 15:14	0	0	0	8	33	36	19	14	5	2	0	0	0	0	0	**117**
15:15 - 15:29	0	0	0	7	44	36	29	15	5	0	0	0	0	0	0	**136**
15:30 - 15:44	0	0	0	11	43	48	23	15	4	1	0	0	0	0	0	**145**
15:45 - 15:59	0	0	0	11	34	37	14	10	8	2	0	0	0	0	0	**116**
16:00 - 16:14	0	0	0	15	46	42	20	21	3	0	0	0	0	0	0	**147**
16:15 - 16:29	0	0	1	13	45	38	25	15	9	1	0	0	0	0	0	**147**
16:30 - 16:44	0	0	0	20	58	49	36	25	4	1	0	0	0	0	0	**193**
16:45 - 16:59	0	0	2	19	61	58	24	9	5	0	0	0	0	0	0	**178**
17:00 - 17:14	0	0	0	5	46	43	42	18	7	0	0	0	0	0	0	**161**
17:15 - 17:29	0	0	0	18	47	53	24	17	5	2	0	0	0	0	0	**166**
17:30 - 17:44	0	0	0	13	46	66	42	24	1	1	0	0	0	0	0	**193**
17:45 - 17:59	0	0	1	19	55	38	37	27	5	1	0	0	0	0	0	**183**
18:00 - 18:14	0	0	0	10	47	28	27	12	8	1	0	0	0	0	0	**133**
18:15 - 18:29	0	0	0	12	51	45	36	10	4	0	0	0	0	0	0	**158**
18:30 - 18:44	0	1	2	18	46	48	14	10	3	0	0	0	0	0	0	**142**
18:45 - 18:59	0	0	0	19	47	39	22	6	2	0	0	0	0	0	0	**135**
19:00 - 19:14	0	0	0	5	39	51	22	4	2	0	0	0	0	0	0	**123**
19:15 - 19:29	0	0	1	10	47	30	17	16	3	0	0	0	0	0	0	**124**
19:30 - 19:44	0	0	0	7	35	52	13	11	1	0	0	0	0	0	0	**119**
19:45 - 19:59	0	0	0	10	41	16	21	11	4	1	0	0	0	0	0	**104**
20:00 - 20:14	0	0	0	5	49	25	12	3	6	0	1	0	0	0	0	**101**
20:15 - 20:29	0	0	0	3	37	26	18	8	0	0	1	0	0	0	0	**93**
20:30 - 20:44	0	0	0	6	16	29	14	4	0	0	1	0	0	0	1	**71**
20:45 - 20:59	0	0	0	5	31	26	12	12	1	0	0	0	0	0	0	**87**
21:00 - 21:14	0	0	0	9	25	18	14	11	1	0	0	0	0	0	0	**78**
21:15 - 21:29	0	0	1	2	29	18	14	6	2	1	0	0	0	0	0	**73**
21:30 - 21:44	0	0	0	5	22	8	19	6	3	0	0	0	0	0	0	**63**
21:45 - 21:59	0	0	0	2	17	6	7	3	5	0	0	0	0	0	0	**40**
22:00 - 22:14	0	0	0	2	17	11	10	8	1	1	0	0	0	0	0	**50**
22:15 - 22:29	0	0	0	1	12	14	14	4	2	0	0	0	0	0	0	**47**
22:30 - 22:44	0	0	0	0	9	4	7	5	3	0	0	0	0	0	0	**28**
22:45 - 22:59	0	0	0	1	7	3	6	1	0	0	0	0	0	0	0	**18**
23:00 - 23:14	0	0	1	1	6	5	4	5	0	2	1	0	0	0	0	**25**
23:15 - 23:29	0	0	0	0	1	3	7	3	1	0	0	0	0	0	0	**15**
23:30 - 23:44	0	0	0	1	5	5	3	2	1	1	0	1	0	0	0	**19**
23:45 - 23:59	0	0	0	2	0	3	3	6	4	1	0	0	0	0	0	**19**
Totals	**0**	**2**	**15**	**492**	**2009**	**1712**	**1084**	**673**	**201**	**40**	**8**	**3**	**0**	**1**	**2**	**6242**
Percent of Total	**0.0**	**0.0**	**0.2**	**7.9**	**32.2**	**27.4**	**17.4**	**10.8**	**3.2**	**0.6**	**0.1**	**0.0**	**0.0**	**0.0**	**0.0**	**100**
Percent of AM	**0.0**	**0.1**	**0.3**	**7.4**	**31.7**	**25.9**	**16.5**	**13.0**	**3.9**	**0.8**	**0.2**	**0.1**	**0.0**	**0.1**	**0.1**	**100**
Percent of PM	**0.0**	**0.0**	**0.2**	**8.0**	**32.3**	**27.9**	**17.6**	**10.1**	**3.0**	**0.6**	**0.1**	**0.0**	**0.0**	**0.0**	**0.0**	**100**

Daily Westbound Speeds (MPH)

Study Date: Tuesday, 09/18/2018
Unit ID: 0204
Location: SW 80TH ST / W OF SW 70TH AVE

Standard Deviation:	6.8 MPH	Ten Mile Pace:	20 to 29 MPH	85th Percentile:	36.0 MPH
Mean Speed:	28.2 MPH	Percent in Ten Mile Pace:	59.6%	15th Percentile:	21.3 MPH
Median Speed:	27.1 MPH			90th Percentile:	37.7 MPH
Modal Speed:	23.0 MPH			95th Percentile:	40.5 MPH

Daily Westbound Speeds (MPH)

Study Date: Wednesday, 09/19/2018
Unit ID: 0204
Location: SW 80TH ST / W OF SW 70TH AVE

	0-5	5-10	10-15	15-20	20-25	25-30	30-35	35-40	40-45	45-50	50-55	55-60	60-65	65-70	70-75	Total
00:00 - 00:14	0	0	1	1	3	4	6	1	0	1	0	0	0	0	0	**17**
00:15 - 00:29	0	0	0	0	1	4	3	1	1	0	0	0	0	0	0	**10**
00:30 - 00:44	0	0	0	1	0	4	1	8	1	1	0	0	0	0	0	**16**
00:45 - 00:59	0	0	0	0	1	2	3	3	1	0	1	0	0	0	0	**11**
01:00 - 01:14	0	0	1	0	1	2	3	2	0	1	0	0	0	0	0	**10**
01:15 - 01:29	0	0	0	2	2	1	0	1	0	0	0	0	0	0	0	**6**
01:30 - 01:44	0	0	0	1	0	2	0	1	0	0	0	0	0	0	0	**4**
01:45 - 01:59	0	0	0	0	1	2	1	3	1	0	1	0	0	0	0	**9**
02:00 - 02:14	0	0	0	0	0	1	3	0	0	0	0	0	0	0	0	**4**
02:15 - 02:29	0	0	0	0	1	0	1	0	0	0	0	0	0	0	0	**2**
02:30 - 02:44	0	0	0	0	0	1	0	1	2	0	0	0	0	0	0	**4**
02:45 - 02:59	0	0	0	0	0	1	2	0	0	0	0	0	0	0	0	**3**
03:00 - 03:14	0	0	0	0	0	0	3	0	0	0	0	0	0	0	0	**3**
03:15 - 03:29	0	0	0	0	1	0	1	0	0	0	0	0	0	0	0	**2**
03:30 - 03:44	0	0	0	0	0	1	0	0	0	1	0	0	0	0	0	**2**
03:45 - 03:59	0	0	0	0	0	4	0	0	0	0	0	0	0	0	0	**4**
04:00 - 04:14	0	0	0	0	0	2	0	0	0	0	0	0	0	0	0	**2**
04:15 - 04:29	0	0	0	0	0	1	0	0	0	0	0	0	0	0	0	**1**
04:30 - 04:44	0	0	1	0	0	0	0	1	0	0	0	0	0	0	0	**2**
04:45 - 04:59	0	0	0	0	1	1	0	0	0	0	0	0	0	0	0	**2**
05:00 - 05:14	0	0	0	1	1	0	0	2	1	0	0	0	0	0	0	**5**
05:15 - 05:29	0	0	0	1	3	0	0	2	0	0	0	1	0	0	0	**7**
05:30 - 05:44	0	0	0	1	1	0	0	4	0	1	0	0	0	0	0	**7**
05:45 - 05:59	0	0	0	2	3	1	1	3	2	0	0	0	0	0	0	**12**
06:00 - 06:14	0	0	0	1	6	4	2	1	0	0	0	0	0	0	0	**14**
06:15 - 06:29	0	0	0	2	6	7	3	0	3	0	0	0	0	0	0	**21**
06:30 - 06:44	0	0	0	1	8	4	7	3	3	2	0	0	0	0	0	**28**
06:45 - 06:59	0	0	0	2	13	4	7	8	0	0	0	0	0	0	0	**34**
07:00 - 07:14	0	0	0	5	13	14	6	4	4	0	0	0	0	0	0	**46**
07:15 - 07:29	0	0	1	5	9	15	8	5	3	1	1	0	0	0	0	**48**
07:30 - 07:44	0	0	2	4	19	11	6	10	3	0	0	0	0	0	0	**55**
07:45 - 07:59	0	0	2	8	23	11	11	4	3	0	0	0	0	0	0	**62**
08:00 - 08:14	0	0	1	3	10	19	14	4	5	0	0	0	0	0	0	**56**
08:15 - 08:29	0	0	0	4	18	14	12	6	1	0	0	0	0	0	0	**55**
08:30 - 08:44	0	0	0	9	14	9	8	6	2	1	0	0	0	0	0	**49**
08:45 - 08:59	0	0	0	5	15	14	11	5	1	2	0	0	0	0	0	**53**
09:00 - 09:14	0	0	0	2	16	21	10	4	0	1	0	0	0	0	0	**54**
09:15 - 09:29	0	0	0	6	12	9	11	6	0	0	0	0	0	0	0	**44**
09:30 - 09:44	0	0	0	3	15	5	9	9	2	0	0	0	0	0	0	**43**
09:45 - 09:59	0	0	1	2	19	17	14	5	2	1	0	0	0	0	0	**61**
10:00 - 10:14	0	0	0	6	17	12	8	4	2	0	0	0	0	0	0	**49**
10:15 - 10:29	1	0	0	5	18	12	9	3	2	0	0	0	0	0	0	**50**
10:30 - 10:44	0	0	1	13	20	13	4	6	2	1	0	0	0	0	0	**60**
10:45 - 10:59	0	0	0	4	24	19	7	2	0	0	0	0	0	0	0	**56**
11:00 - 11:14	0	0	3	4	32	18	17	3	0	1	0	0	0	0	0	**78**
11:15 - 11:29	0	0	0	3	33	18	16	10	2	1	0	0	0	0	0	**83**
11:30 - 11:44	0	0	0	1	30	18	7	7	4	0	0	0	0	0	0	**67**
11:45 - 11:59	0	0	0	8	25	23	13	4	0	2	0	0	0	0	0	**75**
12:00 - 12:14	0	0	1	5	38	21	8	11	2	0	0	0	0	0	0	**86**
12:15 - 12:29	0	0	0	6	33	18	9	10	3	0	0	0	0	0	0	**79**
12:30 - 12:44	0	0	1	5	27	19	13	11	2	0	0	0	0	0	0	**78**

Daily Westbound Speeds (MPH)

Study Date: Wednesday, 09/19/2018
Unit ID: 0204
Location: SW 80TH ST / W OF SW 70TH AVE

	0-5	5-10	10-15	15-20	20-25	25-30	30-35	35-40	40-45	45-50	50-55	55-60	60-65	65-70	70-75	Total
12:45 - 12:59	0	0	0	4	35	30	14	4	1	2	0	0	0	0	0	**90**
13:00 - 13:14	0	0	1	5	33	16	20	10	3	0	0	0	0	0	0	**88**
13:15 - 13:29	0	0	1	3	27	30	14	10	3	0	0	0	0	0	0	**88**
13:30 - 13:44	0	0	0	6	35	26	15	15	3	1	0	0	0	0	0	**101**
13:45 - 13:59	0	0	0	12	28	23	13	11	5	0	0	0	0	0	0	**92**
14:00 - 14:14	0	0	0	6	30	36	16	8	3	3	0	0	0	0	0	**102**
14:15 - 14:29	0	0	0	9	53	32	18	4	3	0	0	0	0	0	0	**119**
14:30 - 14:44	0	0	0	12	40	29	20	7	3	0	1	0	0	0	0	**112**
14:45 - 14:59	0	0	0	3	39	33	11	11	4	0	0	0	0	0	0	**101**
15:00 - 15:14	0	0	0	13	30	43	12	15	4	0	0	0	0	0	0	**117**
15:15 - 15:29	0	0	1	7	57	41	16	10	1	1	0	0	0	0	0	**134**
15:30 - 15:44	0	0	0	10	33	33	20	11	3	2	0	0	0	0	0	**112**
15:45 - 15:59	0	0	1	20	36	29	16	9	2	1	1	0	0	0	0	**115**
16:00 - 16:14	0	0	3	10	39	13	20	13	4	2	0	0	0	0	0	**104**
16:15 - 16:29	0	0	0	10	55	42	30	9	6	0	0	0	0	0	0	**152**
16:30 - 16:44	0	0	0	16	45	49	20	25	5	0	0	0	0	0	0	**160**
16:45 - 16:59	0	0	0	16	41	37	18	28	4	3	0	0	0	0	0	**147**
17:00 - 17:14	0	0	1	14	44	47	41	16	5	1	0	0	0	0	0	**169**
17:15 - 17:29	0	0	1	10	46	35	27	25	1	2	0	0	0	0	0	**147**
17:30 - 17:44	0	0	2	20	39	57	34	15	5	1	0	0	0	0	0	**173**
17:45 - 17:59	0	0	0	12	65	41	29	16	7	1	0	0	0	0	0	**171**
18:00 - 18:14	0	0	0	10	56	46	31	18	2	0	1	0	0	0	0	**164**
18:15 - 18:29	0	0	1	19	32	38	23	8	6	0	0	0	0	0	0	**127**
18:30 - 18:44	0	0	0	20	34	38	17	12	6	0	0	0	0	0	0	**127**
18:45 - 18:59	0	0	0	20	40	31	25	9	6	0	0	0	0	0	0	**131**
19:00 - 19:14	0	0	0	7	51	38	21	10	6	0	1	0	0	0	0	**134**
19:15 - 19:29	0	0	0	7	45	32	17	18	2	0	0	0	0	0	0	**121**
19:30 - 19:44	0	0	0	5	38	35	22	8	2	1	0	0	0	0	0	**111**
19:45 - 19:59	0	0	0	4	42	23	17	4	6	0	0	0	0	0	0	**96**
20:00 - 20:14	0	0	1	12	38	18	16	15	4	0	0	0	0	0	0	**104**
20:15 - 20:29	0	0	0	11	30	21	18	8	5	0	0	0	0	0	0	**93**
20:30 - 20:44	0	0	0	3	36	24	13	11	2	1	0	0	0	0	0	**90**
20:45 - 20:59	0	0	1	5	27	15	14	3	1	0	0	0	0	0	0	**66**
21:00 - 21:14	0	0	0	7	24	22	15	2	1	1	0	0	0	0	0	**72**
21:15 - 21:29	0	0	0	3	23	18	18	13	3	0	0	0	0	0	0	**78**
21:30 - 21:44	0	0	0	3	14	9	8	7	2	0	0	0	0	0	0	**43**
21:45 - 21:59	0	0	0	4	14	5	3	5	4	0	2	0	0	0	0	**37**
22:00 - 22:14	0	0	0	2	12	5	19	7	1	0	0	0	0	0	0	**46**
22:15 - 22:29	0	0	0	1	13	7	13	11	2	1	0	0	0	0	0	**48**
22:30 - 22:44	0	0	0	2	13	6	9	11	1	1	0	0	0	0	0	**43**
22:45 - 22:59	0	0	0	0	9	4	6	4	2	2	0	0	0	0	0	**27**
23:00 - 23:14	0	0	0	1	4	1	8	5	4	1	0	1	0	0	0	**25**
23:15 - 23:29	0	0	0	0	4	10	5	6	3	0	0	0	0	0	0	**28**
23:30 - 23:44	0	0	0	0	7	4	2	7	0	0	0	0	0	0	0	**20**
23:45 - 23:59	0	0	0	0	1	2	6	6	1	1	0	0	0	0	0	**17**
Totals	**1**	**0**	**30**	**496**	**1990**	**1577**	**1048**	**664**	**207**	**47**	**9**	**2**	**0**	**0**	**0**	**6071**
Percent of Total	**0.0**	**0.0**	**0.5**	**8.2**	**32.8**	**26.0**	**17.3**	**10.9**	**3.4**	**0.8**	**0.1**	**0.0**	**0.0**	**0.0**	**0.0**	**100**
Percent of AM	**0.1**	**0.0**	**1.0**	**8.4**	**31.4**	**24.9**	**17.9**	**11.0**	**3.8**	**1.3**	**0.2**	**0.1**	**0.0**	**0.0**	**0.0**	**100**
Percent of PM	**0.0**	**0.0**	**0.3**	**8.1**	**33.2**	**26.3**	**17.1**	**10.9**	**3.3**	**0.6**	**0.1**	**0.0**	**0.0**	**0.0**	**0.0**	**100**

Daily Westbound Speeds (MPH)

Study Date: Wednesday, 09/19/2018
Unit ID: 0204
Location: SW 80TH ST / W OF SW 70TH AVE

Standard Deviation:	6.9 MPH	Ten Mile Pace:	20 to 29 MPH	85th Percentile:	35.2 MPH
Mean Speed:	28.1 MPH	Percent in Ten Mile Pace:	58.8%		
Median Speed:	27.0 MPH			15th Percentile:	21.2 MPH
Modal Speed:	23.0 MPH			90th Percentile:	37.9 MPH
				95th Percentile:	40.6 MPH

Daily Westbound Speeds (MPH)

Study Date: Thursday, 09/20/2018
Unit ID: 0204
Location: SW 80TH ST / W OF SW 70TH AVE

	0-5	5-10	10-15	15-20	20-25	25-30	30-35	35-40	40-45	45-50	50-55	55-60	60-65	65-70	70-75	Total
00:00 - 00:14	0	0	0	0	3	1	3	0	1	0	0	0	0	0	0	**8**
00:15 - 00:29	0	0	0	0	4	2	4	5	3	0	0	0	0	0	0	**18**
00:30 - 00:44	0	0	0	0	0	0	2	1	0	0	0	0	0	0	0	**3**
00:45 - 00:59	0	0	0	1	2	1	3	1	0	0	0	0	0	0	0	**8**
01:00 - 01:14	0	0	0	0	3	2	0	0	0	0	0	0	0	0	0	**5**
01:15 - 01:29	0	0	0	0	2	3	5	2	0	0	0	0	0	0	0	**12**
01:30 - 01:44	0	0	0	0	0	1	3	2	0	1	0	0	0	0	0	**7**
01:45 - 01:59	0	0	0	0	0	2	0	1	0	0	0	0	0	0	0	**3**
02:00 - 02:14	0	0	0	0	1	0	1	2	0	0	0	0	0	0	0	**4**
02:15 - 02:29	0	0	0	1	0	1	0	1	0	0	0	0	0	0	0	**3**
02:30 - 02:44	0	0	0	0	0	0	0	0	0	1	0	0	0	0	0	**1**
02:45 - 02:59	0	0	0	0	0	0	1	1	0	0	0	0	0	0	0	**2**
03:00 - 03:14	0	0	0	0	0	0	2	2	0	0	0	0	0	0	0	**4**
03:15 - 03:29	0	0	0	0	0	1	1	1	0	0	0	0	0	0	0	**3**
03:30 - 03:44	0	0	0	0	1	0	0	0	0	0	0	0	0	0	0	**1**
03:45 - 03:59	0	0	0	0	0	1	0	0	1	0	0	0	0	0	0	**2**
04:00 - 04:14	0	0	0	0	0	0	1	0	0	0	0	0	0	0	0	**1**
04:15 - 04:29	0	0	0	0	0	0	1	0	0	1	0	0	0	0	0	**2**
04:30 - 04:44	0	0	0	0	1	0	0	0	1	0	0	0	0	0	0	**2**
04:45 - 04:59	0	0	0	1	0	0	2	1	1	0	0	0	0	0	0	**5**
05:00 - 05:14	0	0	0	1	0	0	1	0	0	0	0	0	0	0	0	**2**
05:15 - 05:29	0	0	0	1	2	1	1	2	0	0	0	0	0	0	0	**7**
05:30 - 05:44	0	0	1	0	2	0	0	1	1	0	0	0	0	0	0	**5**
05:45 - 05:59	0	0	0	0	3	1	3	0	0	0	0	0	0	0	0	**7**
06:00 - 06:14	0	0	0	1	9	5	2	0	0	0	0	0	0	0	0	**17**
06:15 - 06:29	0	0	2	3	15	5	3	1	0	0	0	0	0	0	0	**29**
06:30 - 06:44	0	0	0	18	20	5	6	4	0	0	0	0	0	0	0	**53**
06:45 - 06:59	0	0	0	2	28	10	8	3	2	0	0	0	0	0	0	**53**
07:00 - 07:14	0	0	0	3	13	12	7	6	7	2	0	0	0	0	0	**50**
07:15 - 07:29	0	0	0	2	15	17	10	10	2	1	0	0	0	0	0	**57**
07:30 - 07:44	0	0	1	2	13	22	6	6	3	6	0	0	0	0	0	**59**
07:45 - 07:59	0	0	0	9	14	24	12	8	4	1	0	0	0	0	0	**72**
08:00 - 08:14	0	0	0	3	19	14	17	6	1	1	0	0	0	0	0	**61**
08:15 - 08:29	0	0	0	6	24	28	16	10	2	1	0	0	0	0	0	**87**
08:30 - 08:44	0	0	0	7	18	21	8	11	2	2	0	0	0	0	0	**69**
08:45 - 08:59	0	0	0	3	22	9	8	10	6	2	0	0	0	0	0	**60**
09:00 - 09:14	0	1	1	7	18	14	17	7	2	1	0	0	0	0	0	**68**
09:15 - 09:29	0	0	0	2	9	12	14	12	2	0	1	0	0	0	0	**52**
09:30 - 09:44	0	0	0	4	21	14	7	8	1	0	0	0	0	0	0	**55**
09:45 - 09:59	0	0	1	8	25	11	10	2	0	1	0	0	0	0	0	**58**
10:00 - 10:14	1	0	2	4	13	16	10	8	2	1	0	0	0	0	0	**57**
10:15 - 10:29	0	0	1	7	23	16	8	7	2	1	0	0	0	0	0	**65**
10:30 - 10:44	0	0	0	4	14	16	17	8	1	0	0	0	0	0	0	**60**
10:45 - 10:59	0	0	0	6	16	11	4	6	3	0	0	0	0	0	0	**46**
11:00 - 11:14	0	0	0	0	21	10	18	14	5	1	0	0	0	0	0	**69**
11:15 - 11:29	0	0	0	5	28	21	10	5	4	2	0	0	0	0	0	**75**
11:30 - 11:44	0	0	0	8	20	19	8	9	2	0	0	0	0	0	0	**66**
11:45 - 11:59	0	0	0	5	17	23	9	3	1	0	0	0	0	0	0	**58**
12:00 - 12:14	0	0	0	10	26	24	16	7	1	0	0	1	0	0	0	**85**
12:15 - 12:29	0	0	0	8	31	11	17	10	5	0	0	0	0	0	0	**82**
12:30 - 12:44	0	0	0	8	27	15	15	10	1	0	0	0	0	0	0	**76**

Daily Westbound Speeds (MPH)

Study Date: Thursday, 09/20/2018
Unit ID: 0204
Location: SW 80TH ST / W OF SW 70TH AVE

	0-5	5-10	10-15	15-20	20-25	25-30	30-35	35-40	40-45	45-50	50-55	55-60	60-65	65-70	70-75	Total
12:45 - 12:59	0	1	1	8	40	25	8	6	0	0	0	0	0	0	0	**89**
13:00 - 13:14	0	0	0	7	39	29	10	1	1	0	1	0	0	0	0	**88**
13:15 - 13:29	0	0	0	10	39	26	8	5	0	2	1	0	0	0	0	**91**
13:30 - 13:44	0	0	0	7	37	22	7	5	1	2	0	0	0	0	0	**81**
13:45 - 13:59	0	0	0	9	28	22	15	9	1	1	0	0	0	0	0	**85**
14:00 - 14:14	0	0	0	8	52	21	9	9	4	0	0	0	0	0	0	**103**
14:15 - 14:29	0	0	1	20	38	25	17	6	3	0	0	0	0	0	0	**110**
14:30 - 14:44	0	0	1	14	59	17	11	8	1	0	0	0	0	0	0	**111**
14:45 - 14:59	0	0	0	8	48	28	14	14	1	0	0	0	0	0	0	**113**
15:00 - 15:14	0	0	1	7	45	38	25	13	4	1	0	0	0	0	0	**134**
15:15 - 15:29	0	0	1	15	54	29	26	14	1	0	0	0	0	0	0	**140**
15:30 - 15:44	0	0	1	11	46	55	46	12	1	2	0	0	0	0	0	**174**
15:45 - 15:59	0	0	0	15	52	47	28	16	4	0	0	0	0	0	0	**162**
16:00 - 16:14	0	0	0	7	43	28	29	25	10	2	0	0	0	0	0	**144**
16:15 - 16:29	0	1	3	23	52	38	32	9	1	1	0	0	0	0	0	**160**
16:30 - 16:44	0	0	0	28	55	42	20	13	3	0	0	0	0	0	0	**161**
16:45 - 16:59	0	0	0	8	52	43	21	21	3	0	0	0	0	0	0	**148**
17:00 - 17:14	0	0	0	20	43	76	45	12	1	1	0	0	0	0	0	**198**
17:15 - 17:29	0	0	0	16	47	39	38	15	2	0	0	0	0	0	0	**157**
17:30 - 17:44	0	0	0	4	51	44	26	21	5	0	0	0	0	0	0	**151**
17:45 - 17:59	0	0	0	14	79	57	28	13	1	0	0	0	0	0	0	**192**
18:00 - 18:14	0	0	0	9	51	42	42	15	1	2	0	0	0	0	0	**162**
18:15 - 18:29	0	0	0	18	49	26	27	12	6	1	0	0	0	0	0	**139**
18:30 - 18:44	0	0	0	9	67	37	16	14	2	1	1	0	0	0	0	**147**
18:45 - 18:59	0	0	1	12	42	36	26	10	3	0	0	0	0	0	0	**130**
19:00 - 19:14	0	0	0	13	39	39	34	7	7	2	0	0	0	0	0	**141**
19:15 - 19:29	0	0	0	13	50	31	20	3	0	0	0	0	0	0	0	**117**
19:30 - 19:44	0	0	0	10	40	31	27	9	4	0	0	0	0	0	0	**121**
19:45 - 19:59	0	0	1	11	44	27	15	10	4	0	0	0	0	0	0	**112**
20:00 - 20:14	0	0	0	11	45	23	8	8	0	0	0	0	0	0	0	**95**
20:15 - 20:29	0	0	0	7	39	29	21	6	2	0	0	0	0	0	0	**104**
20:30 - 20:44	0	0	0	6	33	22	15	6	2	1	0	0	0	0	0	**85**
20:45 - 20:59	0	0	0	10	23	22	14	3	4	0	0	0	0	0	0	**76**
21:00 - 21:14	0	0	0	5	19	24	11	6	1	0	0	0	0	0	0	**66**
21:15 - 21:29	0	0	0	6	35	24	17	5	0	1	0	0	0	0	0	**88**
21:30 - 21:44	0	0	0	8	18	18	10	6	1	0	0	0	0	0	0	**61**
21:45 - 21:59	0	0	0	3	11	9	5	11	1	0	0	0	0	0	0	**40**
22:00 - 22:14	0	0	0	6	13	11	7	11	3	1	0	0	0	0	0	**52**
22:15 - 22:29	0	0	1	2	15	11	7	5	2	0	1	0	0	0	0	**44**
22:30 - 22:44	0	0	0	2	5	7	10	2	4	1	0	0	0	0	0	**31**
22:45 - 22:59	0	0	0	1	9	4	9	5	2	0	0	0	0	0	0	**30**
23:00 - 23:14	0	0	0	2	7	3	3	2	1	0	0	0	0	0	0	**18**
23:15 - 23:29	0	0	0	1	12	1	4	1	2	1	0	0	0	1	0	**23**
23:30 - 23:44	0	0	0	2	7	3	6	1	2	0	0	0	0	0	0	**21**
23:45 - 23:59	0	0	0	0	2	6	4	4	1	1	0	0	0	0	0	**18**
Totals	**1**	**3**	**21**	**576**	**2217**	**1659**	**1138**	**623**	**172**	**50**	**5**	**1**	**0**	**1**	**0**	**6467**
Percent of Total	**0.0**	**0.0**	**0.3**	**8.9**	**34.3**	**25.7**	**17.6**	**9.6**	**2.7**	**0.8**	**0.1**	**0.0**	**0.0**	**0.0**	**0.0**	**100**
Percent of AM	**0.1**	**0.1**	**0.6**	**8.2**	**30.4**	**24.6**	**17.8**	**12.4**	**4.1**	**1.7**	**0.1**	**0.0**	**0.0**	**0.0**	**0.0**	**100**
Percent of PM	**0.0**	**0.0**	**0.2**	**9.1**	**35.5**	**26.0**	**17.5**	**8.8**	**2.2**	**0.5**	**0.1**	**0.0**	**0.0**	**0.0**	**0.0**	**100**

Daily Westbound Speeds (MPH)

Study Date: Thursday, 09/20/2018
Unit ID: 0204
Location: SW 80TH ST / W OF SW 70TH AVE

Standard Deviation:	6.7 MPH	Ten Mile Pace:	20 to 29 MPH	85th Percentile:	35.4 MPH
Mean Speed:	27.8 MPH	Percent in Ten Mile Pace:	59.9%	15th Percentile:	21.0 MPH
Median Speed:	26.5 MPH			90th Percentile:	37.0 MPH
Modal Speed:	23.0 MPH			95th Percentile:	40.1 MPH

Daily Eastbound Speeds (MPH)

Study Date: Tuesday, 09/25/2018
Unit ID: 0075
Location: SW 72ND ST / E OF SW 70TH AVE

	1-5	6-10	11-15	16-20	21-25	26-30	31-35	36-40	41-45	46-50	51-55	56-60	61-65	66-70	71-99	Total
00:00 - 00:14	0	0	0	0	0	0	2	10	3	2	1	0	0	0	0	**18**
00:15 - 00:29	0	0	0	0	0	0	3	4	5	1	1	1	0	0	0	**15**
00:30 - 00:44	0	0	0	0	0	0	0	9	5	2	0	2	0	0	0	**18**
00:45 - 00:59	0	0	0	0	0	0	0	5	1	1	2	0	0	0	0	**9**
01:00 - 01:14	0	0	0	0	0	0	2	5	2	1	0	0	0	0	0	**10**
01:15 - 01:29	0	0	0	0	0	0	1	4	4	1	1	0	0	0	0	**11**
01:30 - 01:44	0	0	0	0	0	0	0	2	2	3	1	0	0	0	0	**8**
01:45 - 01:59	0	0	0	0	0	0	0	1	1	1	1	0	0	0	0	**4**
02:00 - 02:14	0	0	0	0	0	0	0	0	1	0	0	0	0	1	0	**2**
02:15 - 02:29	0	0	0	0	0	0	0	2	4	3	0	1	0	0	0	**10**
02:30 - 02:44	0	0	0	0	0	0	2	1	3	2	2	0	0	0	0	**10**
02:45 - 02:59	0	0	0	0	0	0	1	1	1	0	0	3	0	0	0	**6**
03:00 - 03:14	0	0	0	0	0	0	0	4	2	0	1	0	0	0	0	**7**
03:15 - 03:29	0	0	0	0	0	0	1	4	2	4	0	0	0	0	0	**11**
03:30 - 03:44	0	0	0	0	0	0	0	1	2	2	1	0	0	0	0	**6**
03:45 - 03:59	0	0	0	0	0	1	1	4	1	2	0	0	0	0	0	**9**
04:00 - 04:14	0	0	0	0	0	0	0	3	3	0	1	0	0	0	0	**7**
04:15 - 04:29	0	0	0	0	0	0	0	3	5	2	1	1	0	0	0	**12**
04:30 - 04:44	0	0	0	0	0	0	1	4	9	2	5	1	0	0	0	**22**
04:45 - 04:59	0	0	0	0	0	1	1	8	11	11	2	0	0	0	0	**34**
05:00 - 05:14	0	0	0	0	1	0	1	7	19	14	6	2	0	0	0	**50**
05:15 - 05:29	0	0	0	0	0	0	2	11	25	19	8	3	0	0	0	**68**
05:30 - 05:44	0	0	0	0	0	0	2	13	46	32	18	3	0	0	0	**114**
05:45 - 05:59	0	0	0	0	0	0	8	52	57	31	15	2	0	1	0	**166**
06:00 - 06:14	0	0	0	0	0	0	11	50	75	60	12	2	0	0	0	**210**
06:15 - 06:29	0	0	0	1	1	0	18	105	130	62	18	3	3	0	0	**341**
06:30 - 06:44	0	0	0	0	1	9	80	102	102	52	7	2	1	0	0	**356**
06:45 - 06:59	1	2	1	0	8	41	110	134	61	17	2	2	0	0	0	**379**
07:00 - 07:14	0	1	0	4	10	37	136	113	58	10	3	0	0	0	0	**372**
07:15 - 07:29	0	0	0	3	3	51	89	125	66	10	3	0	0	0	0	**350**
07:30 - 07:44	0	10	13	27	71	61	66	39	14	5	0	0	0	0	0	**306**
07:45 - 07:59	6	14	26	42	43	7	0	0	0	0	0	0	0	0	0	**138**
08:00 - 08:14	4	26	33	46	14	0	0	0	0	0	0	0	0	0	0	**123**
08:15 - 08:29	2	16	43	66	36	15	2	0	0	0	0	0	0	0	0	**180**
08:30 - 08:44	2	14	14	23	24	0	0	0	0	0	0	0	0	0	0	**77**
08:45 - 08:59	2	7	24	65	41	46	47	28	12	2	1	0	0	0	0	**275**
09:00 - 09:14	0	0	0	0	0	47	130	122	45	14	5	1	0	0	0	**364**
09:15 - 09:29	0	0	0	1	2	44	121	124	49	14	4	0	0	0	0	**359**
09:30 - 09:44	0	1	0	0	11	42	79	97	78	22	6	1	1	0	0	**338**
09:45 - 09:59	0	0	0	1	1	7	109	102	78	29	9	0	0	0	0	**336**
10:00 - 10:14	0	1	1	0	2	8	69	108	63	21	3	0	0	0	0	**276**
10:15 - 10:29	0	2	0	1	0	11	53	104	63	17	5	1	0	0	0	**257**
10:30 - 10:44	0	0	0	1	2	16	76	89	65	30	1	1	1	0	0	**282**
10:45 - 10:59	0	0	1	0	0	10	63	77	53	13	6	0	0	0	0	**223**
11:00 - 11:14	0	0	3	0	2	8	73	79	46	14	4	0	0	0	0	**229**
11:15 - 11:29	0	0	0	0	1	10	46	82	62	13	2	0	0	0	0	**216**
11:30 - 11:44	0	0	0	1	3	4	49	82	51	15	3	1	0	0	0	**209**
11:45 - 11:59	0	0	0	0	2	9	35	72	52	17	3	0	0	1	0	**191**
12:00 - 12:14	0	0	0	0	0	7	54	65	63	18	4	0	0	0	0	**211**
12:15 - 12:29	0	1	0	0	2	10	61	59	48	23	5	1	0	0	0	**210**
12:30 - 12:44	0	4	0	1	2	6	35	89	85	18	4	0	0	0	0	**244**

Daily Eastbound Speeds (MPH)

Study Date: Tuesday, 09/25/2018
Unit ID: 0075
Location: SW 72ND ST / E OF SW 70TH AVE

	1-5	6-10	11-15	16-20	21-25	26-30	31-35	36-40	41-45	46-50	51-55	56-60	61-65	66-70	71-99	Total
12:45 - 12:59	0	2	1	1	2	18	58	64	59	14	5	1	0	0	0	**225**
13:00 - 13:14	0	1	1	1	0	6	71	81	49	13	2	1	0	0	0	**226**
13:15 - 13:29	0	0	0	0	2	26	56	74	63	11	5	0	0	0	0	**237**
13:30 - 13:44	0	0	1	0	2	4	64	76	59	14	6	0	0	0	0	**226**
13:45 - 13:59	0	0	0	0	5	23	69	89	49	7	0	1	0	0	0	**243**
14:00 - 14:14	0	0	0	0	2	13	68	86	36	12	2	0	0	0	0	**219**
14:15 - 14:29	0	1	0	1	5	31	75	70	29	12	2	0	0	0	0	**226**
14:30 - 14:44	0	1	0	0	0	33	69	101	45	9	2	0	0	0	0	**260**
14:45 - 14:59	0	1	1	1	0	18	84	60	40	18	3	1	0	0	0	**227**
15:00 - 15:14	0	0	0	1	0	6	65	101	52	15	1	1	0	0	0	**242**
15:15 - 15:29	0	0	0	1	3	17	52	71	41	7	0	0	0	0	0	**192**
15:30 - 15:44	0	0	0	0	0	11	53	84	40	11	3	0	0	0	0	**202**
15:45 - 15:59	0	1	0	0	4	4	60	96	39	19	3	0	0	0	0	**226**
16:00 - 16:14	0	2	4	3	5	10	52	80	56	21	2	1	0	0	0	**236**
16:15 - 16:29	0	0	0	1	1	2	33	61	50	18	2	3	0	0	0	**171**
16:30 - 16:44	0	0	0	0	1	6	43	73	41	15	3	0	0	0	0	**182**
16:45 - 16:59	0	0	0	0	2	25	24	60	38	16	6	0	1	0	0	**172**
17:00 - 17:14	0	0	0	0	1	3	37	65	43	17	4	1	0	0	0	**171**
17:15 - 17:29	0	0	0	0	2	10	49	48	39	18	5	0	0	0	0	**171**
17:30 - 17:44	0	0	0	0	8	32	37	17	5	1	1	0	0	0	0	**101**
17:45 - 17:59	0	0	1	1	20	67	37	12	4	1	1	1	0	0	0	**145**
18:00 - 18:14	0	0	0	5	34	30	18	13	0	2	0	0	0	0	0	**102**
18:15 - 18:29	0	0	0	2	35	37	21	12	2	0	1	0	0	0	0	**110**
18:30 - 18:44	0	0	0	2	40	40	34	9	1	3	0	0	0	0	0	**129**
18:45 - 18:59	0	0	0	4	28	30	19	18	1	0	0	0	0	0	0	**100**
19:00 - 19:14	0	0	0	1	38	38	31	11	5	2	0	0	0	0	0	**126**
19:15 - 19:29	0	0	0	7	34	30	23	10	1	0	0	0	0	0	0	**105**
19:30 - 19:44	0	0	0	1	19	22	15	8	0	0	0	0	0	0	0	**65**
19:45 - 19:59	0	0	0	4	24	30	26	5	0	0	0	0	0	0	0	**89**
20:00 - 20:14	0	0	1	2	28	23	17	11	1	0	0	0	0	0	0	**83**
20:15 - 20:29	0	1	0	5	19	30	21	6	1	0	0	0	0	1	0	**84**
20:30 - 20:44	0	0	1	3	23	36	20	6	0	0	0	0	0	0	0	**89**
20:45 - 20:59	0	0	0	1	31	19	20	0	3	0	0	0	0	0	0	**74**
21:00 - 21:14	0	0	0	0	26	27	12	3	0	0	0	0	0	0	0	**68**
21:15 - 21:29	0	0	1	4	23	23	13	13	0	0	1	0	0	0	0	**78**
21:30 - 21:44	0	0	0	2	26	28	17	9	0	0	0	0	0	0	0	**82**
21:45 - 21:59	0	0	0	0	16	19	13	6	2	0	1	0	0	0	0	**57**
22:00 - 22:14	0	0	1	1	11	22	13	4	1	0	0	0	0	0	0	**53**
22:15 - 22:29	0	0	0	0	17	21	14	9	0	0	0	0	0	0	0	**61**
22:30 - 22:44	0	0	0	2	9	16	9	3	0	0	0	0	0	0	0	**39**
22:45 - 22:59	0	0	0	0	12	31	9	6	1	0	0	0	0	0	0	**59**
23:00 - 23:14	0	0	0	1	9	12	7	0	0	0	0	0	0	0	0	**29**
23:15 - 23:29	0	0	0	0	6	10	11	5	0	0	0	0	0	0	0	**32**
23:30 - 23:44	0	0	0	1	7	11	10	1	0	0	0	0	0	0	0	**30**
23:45 - 23:59	0	0	0	0	11	13	9	1	0	0	0	0	0	0	0	**34**
Totals	**17**	**109**	**172**	**342**	**874**	**1471**	**3198**	**3843**	**2529**	**908**	**238**	**45**	**7**	**4**	**0**	**13757**
Percent of Total	**0.1**	**0.8**	**1.3**	**2.5**	**6.4**	**10.7**	**23.2**	**27.9**	**18.4**	**6.6**	**1.7**	**0.3**	**0.1**	**0.0**	**0.0**	**100**
Percent of AM	**0.2**	**1.3**	**2.3**	**4.0**	**4.0**	**6.9**	**21.2**	**28.4**	**20.5**	**8.2**	**2.3**	**0.5**	**0.1**	**0.0**	**0.0**	**100**
Percent of PM	**0.0**	**0.2**	**0.2**	**0.9**	**8.8**	**14.6**	**25.3**	**27.5**	**16.2**	**5.0**	**1.1**	**0.2**	**0.0**	**0.0**	**0.0**	**100**

Daily Eastbound Speeds (MPH)

Study Date: Tuesday, 09/25/2018
Unit ID: 0075
Location: SW 72ND ST / E OF SW 70TH AVE

Standard Deviation:	8.4 MPH	Ten Mile Pace:	31 to 40 MPH	85th Percentile:	44.3 MPH
Mean Speed:	36.2 MPH	Percent in Ten Mile Pace:	51.2%	15th Percentile:	27.9 MPH
Median Speed:	36.9 MPH			90th Percentile:	45.7 MPH
Modal Speed:	38.5 MPH			95th Percentile:	48.8 MPH

Daily Eastbound Speeds (MPH)

Study Date: Wednesday, 09/26/2018
Unit ID: 0084
Location: SW 72ND ST / E OF SW 70TH AVE

	1-5	6-10	11-15	16-20	21-25	26-30	31-35	36-40	41-45	46-50	51-55	56-60	61-65	66-70	71-99	Total
00:00 - 00:14	0	0	0	0	0	0	3	7	6	1	2	0	0	0	0	**19**
00:15 - 00:29	0	0	0	0	0	0	2	5	4	0	0	0	0	0	0	**11**
00:30 - 00:44	0	0	0	0	0	1	4	6	3	0	0	0	0	0	0	**14**
00:45 - 00:59	0	0	0	0	0	0	2	2	1	4	0	0	1	0	0	**10**
01:00 - 01:14	0	0	0	0	0	1	2	1	7	1	0	0	0	0	0	**12**
01:15 - 01:29	0	0	0	0	0	0	2	3	0	4	0	1	0	0	0	**10**
01:30 - 01:44	0	0	0	0	0	0	0	1	1	1	0	0	0	0	0	**3**
01:45 - 01:59	0	0	0	0	0	0	1	0	1	0	0	0	0	0	0	**2**
02:00 - 02:14	0	0	0	0	0	0	3	1	0	1	0	1	0	0	0	**6**
02:15 - 02:29	0	0	0	0	1	0	1	1	2	1	0	0	0	0	0	**6**
02:30 - 02:44	0	0	0	0	0	1	0	0	3	0	1	0	0	0	0	**5**
02:45 - 02:59	0	0	0	0	0	0	0	0	0	0	0	1	0	0	0	**1**
03:00 - 03:14	0	0	0	0	0	0	0	0	0	3	0	0	0	0	0	**3**
03:15 - 03:29	0	0	0	0	0	0	0	2	0	2	1	0	0	0	0	**5**
03:30 - 03:44	0	0	0	0	0	0	0	1	2	1	0	0	0	0	0	**4**
03:45 - 03:59	0	0	0	0	0	0	1	2	3	2	0	0	0	0	0	**8**
04:00 - 04:14	0	0	0	0	0	0	0	1	0	0	0	0	0	0	0	**1**
04:15 - 04:29	0	0	0	0	1	0	1	3	4	0	0	0	0	0	0	**9**
04:30 - 04:44	0	0	0	0	0	0	6	5	4	3	0	0	0	0	0	**18**
04:45 - 04:59	0	0	0	0	0	2	1	3	8	5	0	0	0	0	0	**19**
05:00 - 05:14	0	0	0	0	1	0	0	10	11	6	3	1	0	0	0	**32**
05:15 - 05:29	0	0	0	0	0	1	1	10	24	10	1	0	0	0	0	**47**
05:30 - 05:44	0	0	0	0	0	0	0	18	17	9	4	1	1	0	0	**50**
05:45 - 05:59	0	0	0	0	0	1	9	23	35	14	4	1	1	0	0	**88**
06:00 - 06:14	0	0	0	0	0	2	10	29	43	16	4	0	0	0	0	**104**
06:15 - 06:29	0	0	0	0	0	0	10	33	35	26	10	2	0	0	0	**116**
06:30 - 06:44	0	0	0	0	3	8	43	51	53	9	3	0	0	0	0	**170**
06:45 - 06:59	0	0	0	0	3	30	101	138	56	16	1	0	0	0	0	**345**
07:00 - 07:14	0	4	17	16	34	51	97	46	15	5	1	0	0	0	0	**286**
07:15 - 07:29	0	2	9	19	23	91	105	49	25	7	0	0	0	0	0	**330**
07:30 - 07:44	2	12	36	53	27	43	14	4	0	0	1	0	0	0	0	**192**
07:45 - 07:59	2	13	52	69	31	0	0	0	0	1	0	1	0	0	0	**169**
08:00 - 08:14	2	14	22	27	16	5	0	0	0	0	0	0	0	0	0	**86**
08:15 - 08:29	1	26	55	23	4	2	0	0	0	0	0	0	0	0	0	**111**
08:30 - 08:44	1	14	30	44	41	34	40	18	2	0	0	0	0	0	0	**224**
08:45 - 08:59	0	20	18	32	43	71	28	34	3	0	0	1	0	0	1	**251**
09:00 - 09:14	0	5	12	26	23	111	89	53	14	3	0	0	0	0	0	**336**
09:15 - 09:29	0	1	1	0	2	28	129	118	42	6	2	1	0	0	0	**330**
09:30 - 09:44	0	0	0	1	10	38	121	101	65	10	1	0	0	0	0	**347**
09:45 - 09:59	0	0	0	0	5	27	105	116	61	9	4	0	0	0	0	**327**
10:00 - 10:14	0	0	0	0	2	4	86	126	64	13	4	0	0	0	0	**299**
10:15 - 10:29	0	0	0	0	4	24	105	90	44	8	0	0	0	0	0	**275**
10:30 - 10:44	0	0	0	1	1	27	104	74	34	10	2	0	0	0	0	**253**
10:45 - 10:59	0	0	0	4	6	27	87	83	34	11	2	1	0	0	0	**255**
11:00 - 11:14	0	0	0	0	3	8	71	99	34	13	2	0	0	0	0	**230**
11:15 - 11:29	0	0	0	0	4	14	65	83	52	12	2	0	0	0	0	**232**
11:30 - 11:44	1	0	1	1	9	24	80	74	26	4	3	0	0	0	0	**223**
11:45 - 11:59	0	0	0	1	2	15	63	90	42	16	3	0	0	0	0	**232**
12:00 - 12:14	0	0	0	2	1	14	52	80	51	15	0	0	0	0	0	**215**
12:15 - 12:29	0	0	0	0	6	17	61	89	47	12	2	0	0	0	0	**234**
12:30 - 12:44	0	0	0	0	8	17	90	64	36	3	2	0	0	0	0	**220**

Printed: 09/28/2018 at 13:45
TrafficViewer Pro v1.6.4.124
PicoCount 2500 V2.35 (s/n# 14101439)

Daily Eastbound Speeds (MPH)

Study Date: Wednesday, 09/26/2018
Unit ID: 0084
Location: SW 72ND ST / E OF SW 70TH AVE

	1-5	6-10	11-15	16-20	21-25	26-30	31-35	36-40	41-45	46-50	51-55	56-60	61-65	66-70	71-99	Total
12:45 - 12:59	0	0	0	0	2	18	63	83	49	5	4	0	0	0	0	**224**
13:00 - 13:14	0	0	0	0	1	18	113	77	32	5	0	0	0	0	0	**246**
13:15 - 13:29	0	0	0	1	3	21	77	70	37	16	4	1	0	0	0	**230**
13:30 - 13:44	0	0	0	0	3	18	67	116	30	3	0	0	0	0	0	**237**
13:45 - 13:59	0	0	0	0	1	17	90	96	35	10	0	0	0	1	0	**250**
14:00 - 14:14	0	0	0	0	0	20	63	85	41	9	1	0	0	0	0	**219**
14:15 - 14:29	0	0	0	0	2	18	65	90	28	7	0	1	0	0	1	**212**
14:30 - 14:44	0	0	0	2	6	20	78	77	45	4	2	0	0	0	0	**234**
14:45 - 14:59	0	0	0	1	0	26	84	79	35	4	1	0	0	0	0	**230**
15:00 - 15:14	0	0	0	0	3	25	76	103	26	6	2	0	0	0	0	**241**
15:15 - 15:29	0	0	0	2	3	37	79	72	27	3	2	0	0	0	0	**225**
15:30 - 15:44	0	0	0	1	1	30	71	90	42	7	0	1	0	0	0	**243**
15:45 - 15:59	0	0	0	0	1	8	51	83	51	14	4	0	0	0	0	**212**
16:00 - 16:14	0	0	0	0	1	17	64	48	44	8	7	0	0	1	0	**190**
16:15 - 16:29	0	0	0	0	2	11	46	90	39	12	1	0	0	0	0	**201**
16:30 - 16:44	0	0	0	1	3	20	53	56	55	12	1	0	0	0	0	**201**
16:45 - 16:59	0	0	0	0	8	23	45	74	37	7	0	2	0	0	0	**196**
17:00 - 17:14	0	0	0	0	0	4	46	70	35	3	0	0	0	0	0	**158**
17:15 - 17:29	0	0	0	0	5	19	70	84	29	5	0	0	0	0	0	**212**
17:30 - 17:44	0	0	0	0	1	14	55	87	45	12	1	0	0	0	0	**215**
17:45 - 17:59	0	0	1	1	3	17	61	86	34	11	0	0	0	0	0	**214**
18:00 - 18:14	0	0	0	0	1	6	44	70	51	18	1	1	0	0	0	**192**
18:15 - 18:29	0	0	0	0	4	11	45	85	37	14	2	2	0	0	0	**200**
18:30 - 18:44	0	0	1	1	5	2	44	84	53	7	3	0	0	0	0	**200**
18:45 - 18:59	0	0	0	0	1	14	63	67	44	14	2	0	0	0	0	**205**
19:00 - 19:14	0	0	0	0	7	30	45	49	21	7	6	1	1	0	0	**167**
19:15 - 19:29	0	0	0	0	1	8	51	72	28	5	2	0	0	0	0	**167**
19:30 - 19:44	0	0	0	0	2	6	34	69	38	8	1	0	0	0	0	**158**
19:45 - 19:59	0	0	0	1	1	5	33	51	36	11	4	1	0	0	0	**143**
20:00 - 20:14	0	0	0	0	0	0	22	65	18	11	2	0	0	0	0	**118**
20:15 - 20:29	0	0	0	0	0	7	15	39	37	10	2	0	1	0	1	**112**
20:30 - 20:44	0	0	0	0	0	6	25	39	33	6	1	0	0	0	1	**111**
20:45 - 20:59	0	0	0	0	2	3	18	42	19	2	1	2	0	0	0	**89**
21:00 - 21:14	0	0	0	0	0	2	21	25	19	16	2	0	0	0	0	**85**
21:15 - 21:29	0	0	0	0	0	3	12	36	17	7	2	0	0	0	0	**77**
21:30 - 21:44	0	0	0	0	0	2	11	35	16	9	1	0	0	0	0	**74**
21:45 - 21:59	0	0	0	0	1	0	8	20	10	6	1	0	0	0	0	**46**
22:00 - 22:14	0	0	0	0	0	2	6	18	16	2	1	0	0	0	0	**45**
22:15 - 22:29	0	0	0	0	0	3	9	19	23	8	2	0	0	0	0	**64**
22:30 - 22:44	0	0	0	0	0	3	6	24	19	3	4	0	0	0	0	**59**
22:45 - 22:59	0	0	0	0	0	3	11	18	11	6	1	0	1	0	0	**51**
23:00 - 23:14	0	0	0	0	0	0	2	17	13	3	4	3	0	0	1	**43**
23:15 - 23:29	0	0	0	0	0	1	4	16	10	3	1	1	0	0	0	**36**
23:30 - 23:44	0	0	0	0	0	0	2	9	9	8	0	1	0	0	0	**29**
23:45 - 23:59	0	0	0	0	1	3	2	7	3	3	2	1	0	0	0	**22**
Totals	**9**	**111**	**255**	**330**	**389**	**1260**	**3745**	**4539**	**2391**	**643**	**143**	**30**	**6**	**2**	**5**	**13858**
Percent of Total	**0.1**	**0.8**	**1.8**	**2.4**	**2.8**	**9.1**	**27.0**	**32.8**	**17.3**	**4.6**	**1.0**	**0.2**	**0.0**	**0.0**	**0.0**	**100**
Percent of AM	**0.1**	**1.8**	**4.1**	**5.2**	**4.9**	**11.3**	**26.1**	**26.4**	**14.4**	**4.3**	**1.0**	**0.2**	**0.0**	**0.0**	**0.0**	**100**
Percent of PM	**0.0**	**0.0**	**0.0**	**0.2**	**1.2**	**7.3**	**27.8**	**37.7**	**19.5**	**4.9**	**1.1**	**0.2**	**0.0**	**0.0**	**0.1**	**100**

Daily Eastbound Speeds (MPH)

Study Date: Wednesday, 09/26/2018
Unit ID: 0084
Location: SW 72ND ST / E OF SW 70TH AVE

Standard Deviation:	7.8 MPH	Ten Mile Pace:	31 to 40 MPH	85th Percentile:	43.4 MPH
Mean Speed:	36.2 MPH	Percent in Ten Mile Pace:	59.8%	15th Percentile:	29.9 MPH
Median Speed:	36.9 MPH			90th Percentile:	44.8 MPH
Modal Speed:	38.5 MPH			95th Percentile:	47.1 MPH

Daily Eastbound Speeds (MPH)

Study Date: Thursday, 09/27/2018
Unit ID: 0084
Location: SW 72ND ST / E OF SW 70TH AVE

	1-5	6-10	11-15	16-20	21-25	26-30	31-35	36-40	41-45	46-50	51-55	56-60	61-65	66-70	71-99	Total
00:00 - 00:14	0	0	0	0	0	0	4	3	3	2	1	1	0	0	0	**14**
00:15 - 00:29	0	0	0	0	0	0	1	3	3	3	1	0	0	0	0	**11**
00:30 - 00:44	0	0	0	0	0	0	1	3	4	1	0	0	0	0	0	**9**
00:45 - 00:59	0	0	0	0	0	0	1	3	5	5	0	0	1	0	0	**15**
01:00 - 01:14	0	0	0	0	0	0	1	3	0	2	0	1	0	0	0	**7**
01:15 - 01:29	0	0	0	0	0	0	1	5	5	0	1	0	0	0	0	**12**
01:30 - 01:44	0	0	0	0	0	0	1	2	2	0	1	0	0	0	0	**6**
01:45 - 01:59	0	0	0	0	0	0	0	0	4	2	0	0	0	0	0	**6**
02:00 - 02:14	0	0	0	0	0	0	1	4	2	1	1	0	0	0	0	**9**
02:15 - 02:29	0	0	0	0	0	0	1	0	1	0	0	0	0	0	0	**2**
02:30 - 02:44	0	0	0	0	0	1	0	2	2	2	1	0	0	0	0	**8**
02:45 - 02:59	0	0	0	0	0	0	0	1	1	4	0	0	0	0	0	**6**
03:00 - 03:14	0	0	0	0	0	0	0	2	1	1	0	0	0	0	0	**4**
03:15 - 03:29	0	0	0	0	0	0	1	3	2	2	0	0	0	0	0	**8**
03:30 - 03:44	0	0	0	0	0	1	0	1	1	0	0	0	0	0	0	**3**
03:45 - 03:59	0	0	0	0	0	0	1	3	3	0	0	0	0	0	0	**7**
04:00 - 04:14	0	0	0	0	0	1	1	3	4	0	0	0	0	0	0	**9**
04:15 - 04:29	0	0	0	0	0	1	2	4	8	0	2	0	0	0	0	**17**
04:30 - 04:44	0	0	0	0	0	0	0	1	3	4	0	1	0	0	0	**9**
04:45 - 04:59	0	0	0	0	1	1	2	10	8	11	3	1	0	0	0	**37**
05:00 - 05:14	0	0	0	0	0	1	0	4	11	7	2	1	1	0	0	**27**
05:15 - 05:29	0	0	0	0	0	3	4	18	18	11	5	0	0	0	0	**59**
05:30 - 05:44	0	0	0	0	0	1	2	9	25	20	2	2	0	0	0	**61**
05:45 - 05:59	0	0	0	0	1	0	4	25	15	22	7	0	1	0	0	**75**
06:00 - 06:14	0	0	0	0	0	1	4	27	41	18	4	2	0	0	0	**97**
06:15 - 06:29	0	0	0	0	2	0	7	30	31	13	7	0	0	0	0	**90**
06:30 - 06:44	0	0	0	0	0	4	22	59	35	17	0	0	0	0	0	**137**
06:45 - 06:59	0	0	0	0	8	87	100	110	52	16	6	0	0	0	0	**379**
07:00 - 07:14	0	0	0	0	7	92	142	98	37	10	1	0	0	0	0	**387**
07:15 - 07:29	0	2	4	10	18	90	128	83	19	6	0	0	0	0	0	**360**
07:30 - 07:44	0	12	56	11	26	27	9	1	2	0	0	0	0	0	0	**144**
07:45 - 07:59	0	12	32	28	15	0	0	1	1	0	0	0	0	0	0	**89**
08:00 - 08:14	4	10	37	58	36	4	1	0	1	0	0	0	0	0	0	**151**
08:15 - 08:29	3	17	39	41	39	5	5	0	0	0	0	0	0	0	0	**149**
08:30 - 08:44	0	12	41	53	65	14	1	0	0	0	0	0	0	0	0	**186**
08:45 - 08:59	0	7	23	43	68	73	61	11	8	2	0	0	0	0	0	**296**
09:00 - 09:14	0	1	2	8	13	53	122	129	38	9	4	0	0	0	1	**380**
09:15 - 09:29	0	0	0	0	2	37	102	124	57	16	0	1	0	0	0	**339**
09:30 - 09:44	0	0	0	0	5	45	95	106	45	9	0	0	0	0	0	**305**
09:45 - 09:59	0	0	0	0	2	18	88	112	56	15	2	1	0	0	0	**294**
10:00 - 10:14	0	0	0	3	13	48	90	74	24	10	6	1	0	0	0	**269**
10:15 - 10:29	0	0	0	1	3	14	72	101	44	11	2	0	0	0	0	**248**
10:30 - 10:44	0	0	0	0	4	27	71	95	48	16	0	1	0	0	0	**262**
10:45 - 10:59	0	0	0	0	1	17	81	88	46	11	3	0	0	0	0	**247**
11:00 - 11:14	0	0	0	0	4	26	72	83	36	14	1	0	0	0	0	**236**
11:15 - 11:29	0	0	0	0	0	6	61	104	48	14	1	0	0	0	0	**234**
11:30 - 11:44	0	0	0	0	3	14	44	97	44	21	0	0	0	0	0	**223**
11:45 - 11:59	0	0	0	2	3	8	72	79	42	11	2	0	0	0	0	**219**
12:00 - 12:14	0	0	0	0	5	32	58	62	37	10	0	0	0	0	0	**204**
12:15 - 12:29	0	0	0	1	0	16	74	78	32	15	1	0	0	0	0	**217**
12:30 - 12:44	0	0	0	1	11	21	67	62	41	8	3	0	0	0	0	**214**

Daily Eastbound Speeds (MPH)

Study Date: Thursday, 09/27/2018
Unit ID: 0084
Location: SW 72ND ST / E OF SW 70TH AVE

	1-5	6-10	11-15	16-20	21-25	26-30	31-35	36-40	41-45	46-50	51-55	56-60	61-65	66-70	71-99	Total
12:45 - 12:59	0	0	0	0	2	15	62	85	44	10	1	0	0	0	0	**219**
13:00 - 13:14	0	0	0	0	5	18	59	77	48	14	1	0	0	0	0	**222**
13:15 - 13:29	0	0	0	1	0	14	55	83	51	9	2	0	0	0	0	**215**
13:30 - 13:44	0	0	0	0	0	22	93	85	29	18	1	0	0	0	0	**248**
13:45 - 13:59	0	0	0	0	2	19	102	90	33	6	1	1	0	0	0	**254**
14:00 - 14:14	0	0	0	0	0	27	118	59	34	7	1	0	0	0	0	**246**
14:15 - 14:29	0	0	0	1	10	36	110	66	11	6	0	0	0	0	0	**240**
14:30 - 14:44	0	0	1	0	6	35	80	74	25	6	2	0	0	0	0	**229**
14:45 - 14:59	0	0	0	0	2	29	75	97	25	4	2	0	0	0	0	**234**
15:00 - 15:14	0	0	0	1	8	22	69	53	16	4	3	0	0	0	0	**176**
15:15 - 15:29	0	0	0	0	8	32	61	59	26	4	1	0	0	0	0	**191**
15:30 - 15:44	0	0	0	1	5	14	88	77	26	7	2	0	0	0	0	**220**
15:45 - 15:59	0	0	1	0	1	14	77	76	34	10	2	0	0	0	0	**215**
16:00 - 16:14	0	0	0	0	4	19	50	55	38	9	3	0	0	0	0	**178**
16:15 - 16:29	0	0	0	0	0	8	53	48	35	8	2	1	0	0	0	**155**
16:30 - 16:44	0	0	0	0	1	12	51	70	34	17	2	0	0	0	0	**187**
16:45 - 16:59	0	0	0	0	5	11	40	77	42	8	1	0	0	0	0	**184**
17:00 - 17:14	0	0	0	0	1	15	58	77	24	8	0	0	0	0	0	**183**
17:15 - 17:29	0	0	0	0	2	31	42	65	29	6	5	0	0	0	0	**180**
17:30 - 17:44	0	0	1	1	0	15	56	90	35	9	2	0	0	0	0	**209**
17:45 - 17:59	0	0	0	0	2	11	45	61	47	16	0	0	0	0	0	**182**
18:00 - 18:14	0	0	0	0	2	5	32	82	50	14	2	2	0	0	0	**189**
18:15 - 18:29	0	0	0	0	0	11	40	72	45	12	1	0	0	0	0	**181**
18:30 - 18:44	0	0	0	0	3	11	74	75	32	13	2	1	0	0	0	**211**
18:45 - 18:59	0	0	0	0	1	12	39	60	48	24	5	1	0	0	0	**190**
19:00 - 19:14	0	0	0	0	1	10	48	50	20	14	1	1	1	0	0	**146**
19:15 - 19:29	0	0	0	0	3	6	39	54	29	16	2	0	0	0	0	**149**
19:30 - 19:44	0	0	0	0	0	12	26	52	25	16	2	3	0	0	0	**136**
19:45 - 19:59	0	0	0	0	0	5	33	53	23	6	9	0	0	0	0	**129**
20:00 - 20:14	0	0	0	1	1	4	17	54	22	14	3	0	0	0	0	**116**
20:15 - 20:29	0	0	0	1	0	6	17	29	29	5	0	0	0	0	0	**87**
20:30 - 20:44	0	0	0	0	0	4	20	44	26	11	3	0	0	0	0	**108**
20:45 - 20:59	0	0	0	0	0	2	21	37	33	6	0	0	0	0	0	**99**
21:00 - 21:14	0	0	0	0	1	5	10	31	20	4	1	0	0	0	0	**72**
21:15 - 21:29	0	0	0	0	1	0	9	34	18	7	5	0	0	0	0	**74**
21:30 - 21:44	0	0	0	0	1	1	7	16	11	3	0	0	0	0	0	**39**
21:45 - 21:59	0	0	0	0	0	1	18	28	22	9	0	0	0	0	0	**78**
22:00 - 22:14	0	0	0	0	0	0	9	14	18	7	2	0	0	0	1	**51**
22:15 - 22:29	0	0	0	0	0	4	8	16	15	6	2	0	0	0	0	**51**
22:30 - 22:44	0	0	0	0	0	1	15	22	17	6	1	0	0	0	0	**62**
22:45 - 22:59	0	0	0	0	0	1	3	16	8	5	0	0	0	0	0	**33**
23:00 - 23:14	0	0	0	0	0	0	3	8	8	6	3	0	0	0	0	**28**
23:15 - 23:29	0	0	0	0	0	2	4	6	11	2	0	0	1	0	0	**26**
23:30 - 23:44	0	0	0	0	1	2	5	7	5	3	0	0	1	0	0	**24**
23:45 - 23:59	0	0	0	0	1	0	4	7	5	2	1	0	0	0	0	**20**
Totals	**7**	**73**	**237**	**267**	**435**	**1313**	**3623**	**4317**	**2222**	**769**	**149**	**23**	**6**	**0**	**2**	**13443**
Percent of Total	**0.1**	**0.5**	**1.8**	**2.0**	**3.2**	**9.8**	**27.0**	**32.1**	**16.5**	**5.7**	**1.1**	**0.2**	**0.0**	**0.0**	**0.0**	**100**
Percent of AM	**0.1**	**1.2**	**3.8**	**4.2**	**5.5**	**11.7**	**24.1**	**28.1**	**14.4**	**5.5**	**1.1**	**0.2**	**0.0**	**0.0**	**0.0**	**100**
Percent of PM	**0.0**	**0.0**	**0.0**	**0.1**	**1.3**	**8.1**	**29.4**	**35.5**	**18.3**	**5.9**	**1.1**	**0.1**	**0.0**	**0.0**	**0.0**	**100**

Daily Eastbound Speeds (MPH)

Study Date: Thursday, 09/27/2018
Unit ID: 0084
Location: SW 72ND ST / E OF SW 70TH AVE

Standard Deviation:	7.7 MPH	Ten Mile Pace:	31 to 40 MPH	85th Percentile:	43.6 MPH
Mean Speed:	36.3 MPH	Percent in Ten Mile Pace:	59.1%		
Median Speed:	36.9 MPH			15th Percentile:	29.8 MPH
Modal Speed:	38.5 MPH			90th Percentile:	45.1 MPH
				95th Percentile:	47.8 MPH

Daily Westbound Speeds (MPH)

Study Date: Tuesday, 09/25/2018
Unit ID: 0167
Location: SW 72ND ST / E OF SW 70TH AVE

	0-5	5-10	10-15	15-20	20-25	25-30	30-35	35-40	40-45	45-50	50-55	55-60	60-65	65-70	70-75	Total
00:00 - 00:14	0	0	0	0	0	0	2	22	19	4	2	1	1	0	0	**51**
00:15 - 00:29	0	0	0	0	0	0	6	7	6	6	0	0	0	0	1	**26**
00:30 - 00:44	0	0	0	0	0	0	2	9	11	2	2	0	0	0	0	**26**
00:45 - 00:59	0	0	0	0	1	0	3	7	8	1	0	0	0	0	0	**20**
01:00 - 01:14	0	0	0	0	0	1	2	5	5	5	0	0	1	0	0	**19**
01:15 - 01:29	0	0	0	0	0	0	3	3	2	3	2	2	0	0	0	**15**
01:30 - 01:44	0	0	0	0	0	0	0	5	5	2	4	0	0	0	0	**16**
01:45 - 01:59	0	0	0	0	0	0	1	3	3	0	1	1	0	0	0	**9**
02:00 - 02:14	0	0	0	0	0	0	1	6	3	0	1	0	0	0	0	**11**
02:15 - 02:29	0	0	0	0	0	0	0	2	1	2	0	1	0	0	0	**6**
02:30 - 02:44	0	0	0	0	0	0	1	2	4	2	2	1	1	0	0	**13**
02:45 - 02:59	0	0	0	0	0	1	1	4	4	1	1	0	0	0	0	**12**
03:00 - 03:14	0	0	0	0	0	0	1	3	1	1	1	0	0	0	0	**7**
03:15 - 03:29	0	0	0	0	0	2	4	5	4	2	0	0	0	0	0	**17**
03:30 - 03:44	0	0	0	0	0	1	1	2	3	1	0	0	0	0	0	**8**
03:45 - 03:59	0	0	0	0	0	1	0	6	1	0	0	0	0	0	0	**8**
04:00 - 04:14	0	0	0	0	0	0	0	0	2	4	0	0	0	0	0	**6**
04:15 - 04:29	0	0	0	0	0	0	0	1	1	1	0	0	0	0	0	**3**
04:30 - 04:44	0	0	0	0	0	0	1	0	1	1	0	2	0	0	0	**5**
04:45 - 04:59	0	0	0	1	0	0	0	4	2	0	0	0	0	0	0	**7**
05:00 - 05:14	0	0	0	0	0	0	3	10	5	2	0	0	0	0	0	**20**
05:15 - 05:29	0	0	0	0	0	0	1	8	8	3	0	0	0	0	0	**20**
05:30 - 05:44	0	0	0	0	0	2	1	7	17	2	2	0	0	0	0	**31**
05:45 - 05:59	0	0	0	0	0	0	8	16	6	8	4	3	0	0	0	**45**
06:00 - 06:14	0	0	0	0	0	2	2	28	14	4	1	0	0	0	0	**51**
06:15 - 06:29	0	0	0	0	0	1	6	17	22	12	3	0	0	0	0	**61**
06:30 - 06:44	0	0	0	0	0	3	9	25	23	11	4	0	0	0	0	**75**
06:45 - 06:59	0	0	0	0	0	3	6	32	28	16	6	0	0	0	0	**91**
07:00 - 07:14	0	0	0	0	1	11	46	31	23	10	5	0	1	0	0	**128**
07:15 - 07:29	0	0	0	0	0	8	41	61	40	14	2	0	0	0	0	**166**
07:30 - 07:44	0	1	0	0	2	9	31	70	27	16	4	0	0	0	0	**160**
07:45 - 07:59	0	0	0	0	2	13	49	43	29	10	1	1	1	0	0	**149**
08:00 - 08:14	0	0	0	0	6	21	49	44	26	15	2	0	0	0	0	**163**
08:15 - 08:29	0	0	0	0	0	12	45	67	32	9	2	0	0	1	0	**168**
08:30 - 08:44	0	0	0	2	0	26	70	53	27	12	0	0	0	0	0	**190**
08:45 - 08:59	0	0	0	0	4	22	37	46	39	13	6	2	0	0	0	**169**
09:00 - 09:14	0	0	0	1	1	7	36	70	48	15	0	0	0	0	0	**178**
09:15 - 09:29	0	0	0	0	3	4	50	54	36	18	2	1	0	0	0	**168**
09:30 - 09:44	0	0	0	0	2	4	24	74	49	15	4	0	0	0	0	**172**
09:45 - 09:59	0	1	0	1	3	23	30	54	36	19	3	0	0	0	0	**170**
10:00 - 10:14	0	0	0	0	1	8	44	61	59	23	1	1	0	0	0	**198**
10:15 - 10:29	0	0	0	0	3	15	51	69	37	21	7	0	0	0	0	**203**
10:30 - 10:44	0	0	0	1	0	12	65	69	38	9	0	1	0	0	0	**195**
10:45 - 10:59	0	0	0	1	3	9	41	77	64	13	2	0	0	0	0	**210**
11:00 - 11:14	0	0	0	0	0	10	39	75	49	15	5	0	0	0	0	**193**
11:15 - 11:29	0	0	0	0	1	7	81	101	39	7	3	0	0	0	0	**239**
11:30 - 11:44	0	0	0	0	2	26	70	87	42	8	4	0	0	0	0	**239**
11:45 - 11:59	0	0	0	0	5	16	64	84	45	15	5	0	1	0	0	**235**
12:00 - 12:14	0	0	0	0	2	30	76	92	50	12	2	0	0	0	0	**264**
12:15 - 12:29	0	0	0	0	3	23	76	74	54	10	5	0	0	1	0	**246**
12:30 - 12:44	0	0	0	0	3	18	61	75	47	16	3	0	0	0	0	**223**

Daily Westbound Speeds (MPH)

Study Date: Tuesday, 09/25/2018
Unit ID: 0167
Location: SW 72ND ST / E OF SW 70TH AVE

	0-5	5-10	10-15	15-20	20-25	25-30	30-35	35-40	40-45	45-50	50-55	55-60	60-65	65-70	70-75	Total
12:45 - 12:59	0	0	0	1	7	19	52	85	56	15	4	1	0	0	0	**240**
13:00 - 13:14	0	0	0	0	0	11	82	77	45	16	3	0	0	0	0	**234**
13:15 - 13:29	0	0	0	0	1	12	75	89	41	10	4	2	0	0	0	**234**
13:30 - 13:44	0	1	0	0	1	19	68	75	49	21	10	1	0	0	0	**245**
13:45 - 13:59	0	0	0	0	14	42	72	60	19	6	1	0	0	0	0	**214**
14:00 - 14:14	0	0	0	0	6	28	85	93	32	10	3	0	1	0	0	**258**
14:15 - 14:29	0	0	0	1	3	28	97	69	33	7	1	0	0	0	0	**239**
14:30 - 14:44	0	0	1	7	12	38	70	84	36	6	4	0	0	0	0	**258**
14:45 - 14:59	0	0	0	1	15	81	77	58	21	4	0	0	0	0	0	**257**
15:00 - 15:14	0	0	0	0	10	47	130	69	33	7	0	0	0	0	0	**296**
15:15 - 15:29	0	0	3	2	28	56	83	75	38	5	0	0	0	0	0	**290**
15:30 - 15:44	1	10	30	47	45	33	48	16	6	0	1	0	0	0	0	**237**
15:45 - 15:59	0	4	9	30	69	42	38	32	10	4	0	0	0	0	0	**238**
16:00 - 16:14	0	5	5	13	34	61	96	77	39	8	0	0	0	0	0	**338**
16:15 - 16:29	0	1	10	31	39	61	113	68	22	8	1	2	0	0	0	**356**
16:30 - 16:44	0	10	19	21	34	63	63	34	15	0	0	1	0	1	0	**261**
16:45 - 16:59	1	5	18	33	71	68	38	38	17	4	0	0	0	0	0	**293**
17:00 - 17:14	0	11	14	49	102	68	15	0	0	0	0	0	0	0	0	**259**
17:15 - 17:29	0	7	21	60	108	37	9	0	0	1	0	0	0	0	1	**244**
17:30 - 17:44	0	12	28	37	118	75	30	7	1	0	0	0	0	0	0	**308**
17:45 - 17:59	1	14	31	49	63	33	5	1	0	0	0	0	0	0	0	**197**
18:00 - 18:14	2	13	21	23	24	59	40	24	7	5	0	0	0	0	0	**218**
18:15 - 18:29	0	0	0	1	18	39	92	76	41	1	2	2	0	0	0	**272**
18:30 - 18:44	0	10	16	22	60	82	64	35	14	4	1	0	0	0	0	**308**
18:45 - 18:59	0	2	11	15	18	33	97	73	26	5	2	0	0	0	0	**282**
19:00 - 19:14	0	0	0	2	19	47	72	73	37	13	1	0	0	0	0	**264**
19:15 - 19:29	0	0	0	3	23	74	78	38	29	8	1	0	0	0	0	**254**
19:30 - 19:44	0	0	0	2	0	20	86	82	35	8	3	1	0	0	0	**237**
19:45 - 19:59	0	0	0	0	0	5	45	67	29	11	3	0	0	0	0	**160**
20:00 - 20:14	0	0	0	0	0	13	86	76	36	9	2	2	0	0	0	**224**
20:15 - 20:29	0	0	0	0	1	8	45	86	46	13	4	0	0	0	0	**203**
20:30 - 20:44	0	0	0	0	0	4	50	94	40	6	3	0	0	0	0	**197**
20:45 - 20:59	0	0	0	0	0	0	21	48	44	15	2	1	0	0	0	**131**
21:00 - 21:14	0	0	0	0	0	10	26	61	44	11	6	0	0	1	0	**159**
21:15 - 21:29	0	0	0	0	1	0	17	63	38	11	6	1	0	0	0	**137**
21:30 - 21:44	0	0	0	0	1	9	15	68	36	15	4	0	0	0	0	**148**
21:45 - 21:59	0	0	0	0	0	0	21	62	26	11	2	1	0	0	0	**123**
22:00 - 22:14	0	0	0	0	1	2	17	50	35	14	4	1	0	0	0	**124**
22:15 - 22:29	0	0	0	0	0	2	12	34	26	18	4	1	0	1	0	**98**
22:30 - 22:44	0	0	0	0	0	0	20	39	25	10	2	2	0	0	0	**98**
22:45 - 22:59	0	0	0	0	0	4	9	23	29	14	3	0	0	0	0	**82**
23:00 - 23:14	0	0	0	0	0	1	26	33	32	8	3	2	0	0	0	**105**
23:15 - 23:29	0	0	0	0	1	0	9	34	29	10	2	1	0	0	0	**86**
23:30 - 23:44	0	0	0	0	0	2	11	24	24	5	3	0	0	0	0	**69**
23:45 - 23:59	0	0	0	0	0	1	7	18	12	9	3	1	0	0	0	**51**
Totals	**5**	**107**	**237**	**457**	**995**	**1688**	**3553**	**4158**	**2398**	**777**	**202**	**40**	**7**	**5**	**2**	**14631**
Percent of Total	**0.0**	**0.7**	**1.6**	**3.1**	**6.8**	**11.5**	**24.3**	**28.4**	**16.4**	**5.3**	**1.4**	**0.3**	**0.0**	**0.0**	**0.0**	**100**
Percent of AM	**0.0**	**0.0**	**0.0**	**0.2**	**0.9**	**6.4**	**23.5**	**35.0**	**22.7**	**8.5**	**2.2**	**0.4**	**0.1**	**0.0**	**0.0**	**100**
Percent of PM	**0.0**	**1.0**	**2.3**	**4.4**	**9.3**	**13.7**	**24.6**	**25.6**	**13.7**	**3.9**	**1.1**	**0.2**	**0.0**	**0.0**	**0.0**	**100**

Daily Westbound Speeds (MPH)

Study Date: Tuesday, 09/25/2018
Unit ID: 0167
Location: SW 72ND ST / E OF SW 70TH AVE

Standard Deviation:	8.4 MPH	Ten Mile Pace:	30 to 39 MPH	85th Percentile:	43.1 MPH
Mean Speed:	35.0 MPH	Percent in Ten Mile Pace:	52.7%	15th Percentile:	26.4 MPH
Median Speed:	35.4 MPH			90th Percentile:	44.9 MPH
Modal Speed:	38.0 MPH			95th Percentile:	47.3 MPH

Daily Westbound Speeds (MPH)

Study Date: Wednesday, 09/26/2018
Unit ID: 0167
Location: SW 72ND ST / E OF SW 70TH AVE

	0-5	5-10	10-15	15-20	20-25	25-30	30-35	35-40	40-45	45-50	50-55	55-60	60-65	65-70	70-75	Total
00:00 - 00:14	0	0	0	0	0	2	4	11	12	10	1	0	0	0	0	**40**
00:15 - 00:29	0	0	0	0	1	1	2	9	21	10	3	0	1	0	0	**48**
00:30 - 00:44	0	0	0	0	0	0	3	14	10	8	1	0	0	0	0	**36**
00:45 - 00:59	0	0	0	0	0	1	4	6	9	2	2	1	0	0	0	**25**
01:00 - 01:14	0	0	0	0	0	0	5	3	13	9	1	0	1	0	0	**32**
01:15 - 01:29	0	0	0	0	0	1	2	1	9	1	1	1	0	0	0	**16**
01:30 - 01:44	0	0	0	0	0	1	2	4	10	4	1	0	0	0	0	**22**
01:45 - 01:59	0	0	0	0	0	0	1	2	7	1	1	0	0	0	0	**12**
02:00 - 02:14	0	0	0	0	0	0	2	1	4	1	0	0	0	0	0	**8**
02:15 - 02:29	0	0	0	0	0	0	0	7	2	3	3	0	0	0	0	**15**
02:30 - 02:44	0	0	0	0	0	0	4	7	3	1	1	0	0	0	0	**16**
02:45 - 02:59	0	0	0	0	0	2	3	3	2	1	0	0	0	0	0	**11**
03:00 - 03:14	0	0	0	0	1	0	2	1	2	1	1	0	0	0	0	**8**
03:15 - 03:29	0	0	0	0	0	1	0	1	3	1	0	0	0	0	0	**6**
03:30 - 03:44	0	0	0	0	0	0	2	3	2	2	2	0	0	0	0	**11**
03:45 - 03:59	0	0	0	0	0	0	5	4	2	1	1	2	0	0	0	**15**
04:00 - 04:14	0	0	0	0	0	0	0	3	4	1	0	0	0	0	0	**8**
04:15 - 04:29	0	0	0	0	0	1	0	2	3	0	1	0	0	0	0	**7**
04:30 - 04:44	0	0	0	0	0	0	0	4	5	4	1	2	0	0	0	**16**
04:45 - 04:59	0	0	0	0	0	0	3	2	4	3	0	0	1	0	0	**13**
05:00 - 05:14	0	0	0	0	0	1	2	1	2	3	0	0	0	0	0	**9**
05:15 - 05:29	0	0	0	0	0	3	1	5	4	7	2	0	0	2	0	**24**
05:30 - 05:44	0	0	0	0	0	1	6	6	12	9	3	0	0	0	0	**37**
05:45 - 05:59	0	0	0	0	0	1	1	7	8	10	4	0	1	0	0	**32**
06:00 - 06:14	0	0	0	0	0	3	7	17	17	10	4	2	0	0	0	**60**
06:15 - 06:29	0	0	0	0	0	1	3	14	11	7	3	1	0	0	0	**40**
06:30 - 06:44	0	0	0	0	0	0	9	19	19	16	1	2	0	0	0	**66**
06:45 - 06:59	0	0	0	0	0	1	10	28	39	13	1	0	2	0	0	**94**
07:00 - 07:14	0	0	0	0	0	2	28	32	40	19	4	0	1	0	0	**126**
07:15 - 07:29	0	0	0	0	0	3	19	47	42	17	4	1	1	0	0	**134**
07:30 - 07:44	0	0	0	0	0	2	24	63	40	12	1	0	0	0	0	**142**
07:45 - 07:59	0	0	0	1	2	10	33	47	30	16	1	0	0	0	0	**140**
08:00 - 08:14	0	0	0	0	1	11	16	50	26	12	2	0	0	0	0	**118**
08:15 - 08:29	0	0	0	0	0	12	42	42	17	13	4	0	1	0	0	**131**
08:30 - 08:44	0	1	1	0	0	4	34	53	34	14	1	0	0	0	0	**142**
08:45 - 08:59	0	0	0	0	2	16	30	52	42	11	5	1	0	0	0	**159**
09:00 - 09:14	0	0	0	0	1	2	29	49	36	16	8	0	0	0	0	**141**
09:15 - 09:29	0	0	0	0	0	4	44	52	34	18	5	0	0	0	0	**157**
09:30 - 09:44	0	0	0	0	1	6	20	60	45	19	4	2	0	0	0	**157**
09:45 - 09:59	0	0	0	0	4	17	48	69	44	18	3	2	0	0	0	**205**
10:00 - 10:14	0	0	0	0	0	5	37	89	44	16	5	2	1	0	0	**199**
10:15 - 10:29	0	0	0	0	2	9	41	78	60	22	1	0	0	0	0	**213**
10:30 - 10:44	0	0	0	0	4	21	45	73	49	16	4	1	0	0	0	**213**
10:45 - 10:59	0	0	0	0	1	9	53	78	48	8	4	0	0	0	0	**201**
11:00 - 11:14	0	0	0	0	5	25	64	83	45	15	2	0	0	0	0	**239**
11:15 - 11:29	0	0	0	0	2	8	83	89	32	7	2	0	0	0	0	**223**
11:30 - 11:44	0	0	0	0	1	17	64	89	25	22	6	0	0	1	0	**225**
11:45 - 11:59	0	0	0	0	4	4	42	101	51	17	4	0	0	0	0	**223**
12:00 - 12:14	0	0	0	1	0	5	78	81	45	17	3	1	0	0	0	**231**
12:15 - 12:29	0	0	0	0	3	19	78	83	49	11	3	0	1	0	0	**247**
12:30 - 12:44	0	0	0	1	2	10	61	72	49	18	1	0	0	0	0	**214**

Daily Westbound Speeds (MPH)

Study Date: Wednesday, 09/26/2018
Unit ID: 0167
Location: SW 72ND ST / E OF SW 70TH AVE

	0-5	5-10	10-15	15-20	20-25	25-30	30-35	35-40	40-45	45-50	50-55	55-60	60-65	65-70	70-75	Total
12:45 - 12:59	0	0	0	0	11	21	70	77	44	17	3	1	0	0	0	**244**
13:00 - 13:14	0	0	0	1	2	27	49	90	46	16	3	0	0	0	0	**234**
13:15 - 13:29	0	0	0	0	0	27	54	84	51	21	3	1	0	0	0	**241**
13:30 - 13:44	0	0	0	0	5	13	53	84	64	22	1	2	0	0	0	**244**
13:45 - 13:59	0	0	2	0	11	42	62	64	28	10	1	1	0	0	0	**221**
14:00 - 14:14	0	0	0	0	3	25	81	77	36	6	0	0	0	0	0	**228**
14:15 - 14:29	0	0	0	1	10	55	93	68	31	14	2	1	0	0	0	**275**
14:30 - 14:44	0	0	0	0	11	57	88	73	27	7	1	0	0	0	0	**264**
14:45 - 14:59	0	0	0	0	0	16	123	82	25	8	2	1	0	0	0	**257**
15:00 - 15:14	0	0	0	0	7	36	96	93	51	9	4	0	0	0	0	**296**
15:15 - 15:29	0	0	4	7	20	49	123	72	37	8	0	0	0	0	0	**320**
15:30 - 15:44	1	0	6	10	40	74	75	64	38	7	4	0	1	0	0	**320**
15:45 - 15:59	0	0	5	7	13	86	96	61	41	9	4	0	0	0	0	**322**
16:00 - 16:14	0	0	2	5	5	53	106	99	33	9	3	0	0	0	0	**315**
16:15 - 16:29	0	0	4	5	19	76	88	95	37	10	0	0	0	0	0	**334**
16:30 - 16:44	1	1	9	8	41	90	71	49	44	8	2	0	0	0	0	**324**
16:45 - 16:59	1	1	4	7	32	71	114	70	23	8	2	1	0	0	0	**334**
17:00 - 17:14	0	3	21	10	19	68	93	61	20	9	2	1	0	0	0	**307**
17:15 - 17:29	0	6	7	14	36	64	101	72	29	6	2	0	0	0	0	**337**
17:30 - 17:44	0	6	7	7	50	74	83	63	28	4	1	0	0	0	0	**323**
17:45 - 17:59	0	0	0	3	35	95	104	68	36	3	1	0	0	0	0	**345**
18:00 - 18:14	0	0	0	4	22	45	106	86	34	13	5	0	0	0	0	**315**
18:15 - 18:29	0	0	5	12	15	49	105	74	26	5	1	1	0	0	0	**293**
18:30 - 18:44	0	0	0	0	7	58	115	70	30	13	4	1	0	0	0	**298**
18:45 - 18:59	0	0	0	4	7	70	92	73	23	8	1	1	0	0	0	**279**
19:00 - 19:14	0	0	0	0	1	43	91	58	32	9	4	0	0	0	0	**238**
19:15 - 19:29	0	0	0	0	8	27	95	72	25	6	0	0	0	0	0	**233**
19:30 - 19:44	0	3	0	0	3	24	74	82	32	13	1	0	0	0	0	**232**
19:45 - 19:59	0	0	0	0	2	14	73	53	33	7	2	0	0	0	0	**184**
20:00 - 20:14	0	0	0	5	3	30	55	71	32	12	2	0	1	0	0	**211**
20:15 - 20:29	0	0	0	0	0	12	36	84	42	15	3	1	1	0	0	**194**
20:30 - 20:44	0	0	0	0	0	6	69	83	35	2	1	2	1	0	0	**199**
20:45 - 20:59	0	0	0	0	0	4	24	78	51	7	3	0	0	0	0	**167**
21:00 - 21:14	0	0	0	0	0	3	30	66	39	14	3	0	0	0	0	**155**
21:15 - 21:29	0	0	0	1	0	5	32	71	46	18	3	0	0	0	0	**176**
21:30 - 21:44	0	0	0	0	0	1	16	68	46	11	3	2	0	1	0	**148**
21:45 - 21:59	0	0	0	0	0	4	16	57	55	17	4	0	0	0	0	**153**
22:00 - 22:14	0	0	0	0	0	1	21	45	45	13	2	0	0	1	0	**128**
22:15 - 22:29	0	0	0	0	0	1	11	29	28	13	3	1	0	0	0	**86**
22:30 - 22:44	0	0	0	0	0	2	8	39	43	10	4	0	0	0	0	**106**
22:45 - 22:59	0	0	0	0	0	1	9	31	35	10	4	3	0	0	0	**93**
23:00 - 23:14	0	0	0	0	0	1	13	28	29	9	4	0	0	1	0	**85**
23:15 - 23:29	0	0	0	0	0	1	11	22	26	14	2	1	0	1	0	**78**
23:30 - 23:44	0	0	0	0	0	2	8	27	16	18	4	2	1	0	0	**78**
23:45 - 23:59	0	0	0	0	0	1	8	21	20	8	2	3	0	0	0	**63**
Totals	**3**	**21**	**77**	**114**	**475**	**1766**	**4037**	**4671**	**2758**	**969**	**222**	**48**	**16**	**7**	**0**	**15184**
Percent of Total	**0.0**	**0.1**	**0.5**	**0.8**	**3.1**	**11.6**	**26.6**	**30.8**	**18.2**	**6.4**	**1.5**	**0.3**	**0.1**	**0.0**	**0.0**	**100**
Percent of AM	**0.0**	**0.0**	**0.0**	**0.0**	**0.8**	**4.9**	**20.9**	**35.1**	**24.3**	**10.6**	**2.6**	**0.5**	**0.2**	**0.1**	**0.0**	**100**
Percent of PM	**0.0**	**0.2**	**0.7**	**1.0**	**4.0**	**14.2**	**28.8**	**29.1**	**15.8**	**4.8**	**1.0**	**0.3**	**0.1**	**0.0**	**0.0**	**100**

Daily Westbound Speeds (MPH)

Study Date: Wednesday, 09/26/2018
Unit ID: 0167
Location: SW 72ND ST / E OF SW 70TH AVE

Standard Deviation:	7.1 MPH	Ten Mile Pace:	30 to 39 MPH	85th Percentile:	43.8 MPH
Mean Speed:	36.6 MPH	Percent in Ten Mile Pace:	57.3%		
Median Speed:	36.4 MPH			15th Percentile:	30.4 MPH
Modal Speed:	38.0 MPH			90th Percentile:	45.4 MPH
				95th Percentile:	48.1 MPH

Daily Westbound Speeds (MPH)

Study Date: Thursday, 09/27/2018
Unit ID: 0167
Location: SW 72ND ST / E OF SW 70TH AVE

	0-5	5-10	10-15	15-20	20-25	25-30	30-35	35-40	40-45	45-50	50-55	55-60	60-65	65-70	70-75	Total
00:00 - 00:14	0	0	0	0	0	2	4	6	18	8	2	1	0	0	0	**41**
00:15 - 00:29	0	0	0	0	0	1	2	9	15	8	1	1	0	0	0	**37**
00:30 - 00:44	0	0	0	0	0	2	1	9	15	4	6	0	0	0	0	**37**
00:45 - 00:59	0	0	0	0	0	1	3	9	12	6	4	0	0	0	0	**35**
01:00 - 01:14	0	0	0	0	0	0	5	13	9	6	2	0	0	0	0	**35**
01:15 - 01:29	0	0	0	0	0	1	2	6	8	5	0	0	0	0	0	**22**
01:30 - 01:44	0	0	0	0	0	0	2	2	5	6	0	1	0	0	0	**16**
01:45 - 01:59	0	0	0	0	0	0	1	3	4	2	2	0	1	0	0	**13**
02:00 - 02:14	0	0	0	0	0	1	2	4	5	2	1	1	1	0	0	**17**
02:15 - 02:29	0	0	0	0	0	0	2	3	5	3	0	0	1	0	0	**14**
02:30 - 02:44	0	0	0	0	0	2	1	3	6	6	0	0	0	0	0	**18**
02:45 - 02:59	0	0	0	0	0	1	1	1	6	2	0	2	0	0	0	**13**
03:00 - 03:14	0	0	0	0	0	0	3	5	4	5	0	1	0	0	0	**18**
03:15 - 03:29	0	0	0	0	0	0	1	7	6	2	1	0	0	0	0	**17**
03:30 - 03:44	0	0	0	0	0	0	0	3	5	3	0	0	0	0	0	**11**
03:45 - 03:59	0	0	0	0	0	1	4	4	5	3	1	0	0	0	0	**18**
04:00 - 04:14	0	0	0	0	0	0	3	5	7	2	0	0	0	0	0	**17**
04:15 - 04:29	0	0	0	0	0	0	2	7	1	4	3	0	1	0	0	**18**
04:30 - 04:44	0	0	0	0	0	0	0	3	3	2	0	0	0	0	0	**8**
04:45 - 04:59	0	0	0	0	0	0	1	2	10	3	2	0	0	0	0	**18**
05:00 - 05:14	0	0	0	0	0	0	0	5	4	4	1	2	0	0	0	**16**
05:15 - 05:29	0	0	0	0	0	0	3	7	10	5	1	0	0	1	0	**27**
05:30 - 05:44	0	0	0	0	1	0	3	9	9	7	5	0	1	0	0	**35**
05:45 - 05:59	0	0	0	0	0	1	6	8	16	3	1	0	0	0	0	**35**
06:00 - 06:14	0	0	0	0	0	1	6	13	16	11	4	0	0	0	0	**51**
06:15 - 06:29	0	0	0	0	0	0	6	10	19	17	2	2	0	0	0	**56**
06:30 - 06:44	0	0	0	0	0	0	12	14	28	19	5	2	0	0	0	**80**
06:45 - 06:59	0	0	0	0	0	1	9	32	25	15	9	1	0	0	0	**92**
07:00 - 07:14	0	0	0	0	0	2	28	51	36	10	6	3	0	0	0	**136**
07:15 - 07:29	0	0	0	0	0	5	20	51	37	27	5	2	0	0	0	**147**
07:30 - 07:44	0	0	0	0	0	9	54	59	24	14	5	0	0	0	0	**165**
07:45 - 07:59	0	0	0	0	1	8	21	59	30	10	2	0	0	0	0	**131**
08:00 - 08:14	0	0	0	0	0	14	56	46	32	13	4	1	0	0	0	**166**
08:15 - 08:29	0	0	2	1	4	26	74	48	26	7	4	0	0	0	0	**192**
08:30 - 08:44	0	0	0	0	1	17	45	63	36	5	1	3	0	0	0	**171**
08:45 - 08:59	0	0	0	1	0	12	34	61	31	13	1	0	0	0	0	**153**
09:00 - 09:14	0	0	0	0	0	5	24	71	40	21	1	1	0	0	0	**163**
09:15 - 09:29	0	1	0	0	0	6	20	57	51	25	5	0	0	0	0	**165**
09:30 - 09:44	0	0	0	0	1	14	36	48	39	28	3	1	0	0	0	**170**
09:45 - 09:59	0	0	1	0	2	3	37	55	54	23	1	1	0	0	0	**177**
10:00 - 10:14	0	0	0	0	2	4	41	65	49	17	6	1	1	0	0	**186**
10:15 - 10:29	0	0	0	0	1	6	26	65	50	34	3	0	0	0	0	**185**
10:30 - 10:44	0	0	0	0	2	13	40	78	55	13	4	0	0	0	0	**205**
10:45 - 10:59	0	0	0	0	2	19	61	58	40	9	2	1	0	0	0	**192**
11:00 - 11:14	0	0	0	0	0	5	53	81	53	13	6	1	0	0	0	**212**
11:15 - 11:29	0	0	0	0	3	18	62	66	48	11	3	0	0	0	0	**211**
11:30 - 11:44	0	0	0	0	7	33	58	85	39	14	2	0	0	0	0	**238**
11:45 - 11:59	0	0	0	0	5	12	54	112	48	14	2	0	0	0	0	**247**
12:00 - 12:14	0	0	0	0	4	21	73	101	35	10	3	0	0	0	0	**247**
12:15 - 12:29	0	0	0	0	0	12	71	96	50	5	4	0	0	0	0	**238**
12:30 - 12:44	0	0	0	0	1	6	64	85	56	8	1	0	0	1	0	**222**

Daily Westbound Speeds (MPH)

Study Date: Thursday, 09/27/2018
Unit ID: 0167
Location: SW 72ND ST / E OF SW 70TH AVE

	0-5	5-10	10-15	15-20	20-25	25-30	30-35	35-40	40-45	45-50	50-55	55-60	60-65	65-70	70-75	Total
12:45 - 12:59	0	0	0	1	6	11	64	90	42	21	3	0	0	0	0	**238**
13:00 - 13:14	0	0	0	0	0	30	81	73	38	18	1	0	0	0	0	**241**
13:15 - 13:29	0	0	0	0	2	17	60	88	53	14	4	1	0	0	0	**239**
13:30 - 13:44	0	0	0	0	9	15	73	76	40	14	3	2	1	0	0	**233**
13:45 - 13:59	0	0	0	0	8	59	86	55	25	1	2	1	0	0	0	**237**
14:00 - 14:14	0	0	0	0	27	83	74	40	15	7	3	0	1	0	0	**250**
14:15 - 14:29	0	0	0	2	25	72	111	37	11	1	0	0	0	0	0	**259**
14:30 - 14:44	0	0	2	2	20	55	81	79	11	6	0	0	0	0	0	**256**
14:45 - 14:59	0	0	1	0	6	65	110	83	11	0	0	0	0	0	0	**276**
15:00 - 15:14	5	3	7	10	28	64	96	47	12	6	2	0	0	0	0	**280**
15:15 - 15:29	0	0	3	8	16	72	107	57	23	3	1	0	0	0	0	**290**
15:30 - 15:44	0	8	9	27	77	58	73	47	9	3	0	0	0	0	0	**311**
15:45 - 15:59	0	0	4	17	48	56	75	57	23	9	4	0	0	0	0	**293**
16:00 - 16:14	2	4	11	18	66	79	113	35	13	7	1	1	0	0	0	**350**
16:15 - 16:29	1	5	8	16	77	68	72	50	18	4	1	0	0	0	0	**320**
16:30 - 16:44	0	1	3	16	49	121	121	43	17	1	3	0	0	0	0	**375**
16:45 - 16:59	0	4	26	26	61	69	53	53	20	5	1	1	0	0	0	**319**
17:00 - 17:14	2	7	20	32	62	74	62	47	10	3	3	0	0	0	0	**322**
17:15 - 17:29	1	9	22	24	54	70	64	43	20	5	1	0	0	0	0	**313**
17:30 - 17:44	1	4	12	27	53	84	89	45	12	2	0	0	0	0	0	**329**
17:45 - 17:59	0	0	4	6	6	74	134	92	14	6	0	0	0	0	0	**336**
18:00 - 18:14	0	2	2	6	48	75	120	54	23	6	1	0	0	0	0	**337**
18:15 - 18:29	0	0	6	25	25	53	92	70	25	6	0	0	0	0	0	**302**
18:30 - 18:44	0	0	0	0	4	27	122	95	37	9	2	1	0	0	0	**297**
18:45 - 18:59	0	0	0	0	7	39	88	71	32	12	1	1	0	0	0	**251**
19:00 - 19:14	0	0	0	0	0	42	82	58	41	5	1	1	0	0	0	**230**
19:15 - 19:29	0	0	0	2	21	39	66	64	34	8	0	0	0	0	0	**234**
19:30 - 19:44	0	0	0	0	3	39	78	77	41	7	2	0	0	0	0	**247**
19:45 - 19:59	0	0	0	0	0	9	53	78	27	9	3	0	0	0	0	**179**
20:00 - 20:14	0	0	0	0	2	24	89	63	33	7	3	0	0	0	0	**221**
20:15 - 20:29	0	0	0	0	0	7	53	81	46	14	4	0	0	0	0	**205**
20:30 - 20:44	0	0	0	0	0	5	18	80	66	8	4	1	1	0	0	**183**
20:45 - 20:59	0	0	0	0	1	6	27	55	62	10	1	0	0	0	0	**162**
21:00 - 21:14	0	0	0	0	0	9	39	50	47	11	5	1	0	0	0	**162**
21:15 - 21:29	0	0	0	0	0	5	40	55	32	7	5	2	1	0	0	**147**
21:30 - 21:44	0	0	0	0	0	1	20	52	49	18	1	1	0	0	0	**142**
21:45 - 21:59	0	0	0	1	2	5	22	43	30	14	2	0	1	0	0	**120**
22:00 - 22:14	0	0	0	0	1	2	17	41	38	20	3	4	0	0	0	**126**
22:15 - 22:29	0	0	0	0	0	3	12	35	49	25	5	2	0	0	0	**131**
22:30 - 22:44	0	0	0	1	0	2	17	34	28	9	5	0	0	0	0	**96**
22:45 - 22:59	0	0	0	0	0	2	18	26	34	16	3	1	0	0	0	**100**
23:00 - 23:14	0	0	0	0	0	2	17	26	26	14	8	1	0	0	0	**94**
23:15 - 23:29	0	0	0	0	0	3	10	26	20	13	7	0	0	0	0	**79**
23:30 - 23:44	0	0	0	0	0	0	11	22	32	21	7	1	0	0	0	**94**
23:45 - 23:59	0	0	0	0	0	0	11	24	23	8	1	2	0	0	0	**69**
Totals	**12**	**48**	**143**	**269**	**851**	**1980**	**4058**	**4280**	**2547**	**920**	**234**	**54**	**11**	**2**	**0**	**15409**
Percent of Total	**0.1**	**0.3**	**0.9**	**1.7**	**5.5**	**12.8**	**26.3**	**27.8**	**16.5**	**6.0**	**1.5**	**0.4**	**0.1**	**0.0**	**0.0**	**100**
Percent of AM	**0.0**	**0.0**	**0.1**	**0.0**	**0.7**	**5.6**	**21.0**	**33.5**	**24.7**	**10.9**	**2.7**	**0.7**	**0.1**	**0.0**	**0.0**	**100**
Percent of PM	**0.1**	**0.4**	**1.3**	**2.4**	**7.5**	**15.8**	**28.5**	**25.5**	**13.2**	**4.0**	**1.0**	**0.2**	**0.0**	**0.0**	**0.0**	**100**

Daily Westbound Speeds (MPH)

Study Date: Thursday, 09/27/2018
Unit ID: 0167
Location: SW 72ND ST / E OF SW 70TH AVE

Standard Deviation:	7.8 MPH	Ten Mile Pace:	30 to 39 MPH	85th Percentile:	43.4 MPH
Mean Speed:	35.6 MPH	Percent in Ten Mile Pace:	54.1%	15th Percentile:	28.0 MPH
Median Speed:	35.5 MPH			90th Percentile:	45.2 MPH
Modal Speed:	38.0 MPH			95th Percentile:	47.9 MPH

Daily Eastbound Speeds (MPH)

Study Date: Tuesday, 09/18/2018
Unit ID: 0166
Location: SW 64TH ST / W OF SW 69TH CT

	0-5	5-10	10-15	15-20	20-25	25-30	30-35	35-40	40-45	45-50	50-55	55-60	60-65	65-70	70-75	Total
00:00 - 00:14	0	0	0	1	0	0	1	0	0	0	1	0	0	0	0	**3**
00:15 - 00:29	0	0	0	0	0	1	0	1	0	0	0	0	0	0	0	**2**
00:30 - 00:44	0	0	0	0	0	0	0	0	0	0	0	0	0	0	0	**0**
00:45 - 00:59	0	0	0	0	0	0	0	0	0	0	0	0	0	0	0	**0**
01:00 - 01:14	0	0	0	0	0	0	0	0	0	0	0	0	0	0	0	**0**
01:15 - 01:29	0	0	0	0	0	0	1	1	0	0	0	0	0	0	0	**2**
01:30 - 01:44	0	0	0	0	0	0	0	0	0	0	0	0	0	0	0	**0**
01:45 - 01:59	0	0	0	0	0	1	0	0	0	0	0	0	0	0	0	**1**
02:00 - 02:14	0	0	1	1	0	0	0	0	0	0	0	0	0	0	0	**2**
02:15 - 02:29	0	0	0	0	1	0	0	0	0	0	0	0	0	0	0	**1**
02:30 - 02:44	0	0	0	0	1	0	0	0	0	0	0	0	0	0	0	**1**
02:45 - 02:59	0	0	0	0	0	0	0	0	0	0	0	0	0	0	0	**0**
03:00 - 03:14	0	0	0	1	0	0	0	0	0	0	0	0	0	0	0	**1**
03:15 - 03:29	0	0	0	0	0	0	0	0	0	0	0	0	0	0	0	**0**
03:30 - 03:44	0	0	0	0	0	0	0	0	0	0	0	0	0	0	0	**0**
03:45 - 03:59	0	0	0	0	0	1	0	0	0	0	0	0	0	0	0	**1**
04:00 - 04:14	0	0	0	0	0	0	0	1	0	0	0	0	0	0	0	**1**
04:15 - 04:29	0	0	0	0	0	0	1	0	0	0	0	0	0	0	0	**1**
04:30 - 04:44	0	0	0	0	0	0	0	0	0	0	0	0	0	0	0	**0**
04:45 - 04:59	0	0	0	0	0	0	0	0	0	0	0	0	0	0	0	**0**
05:00 - 05:14	0	0	0	0	0	0	0	0	0	0	0	0	0	0	0	**0**
05:15 - 05:29	0	0	0	0	0	0	1	0	0	0	0	0	0	0	0	**1**
05:30 - 05:44	0	0	0	0	0	0	1	0	0	0	0	0	0	0	0	**1**
05:45 - 05:59	0	0	0	0	0	1	0	1	0	0	0	0	0	0	0	**2**
06:00 - 06:14	0	0	0	0	1	0	3	0	0	0	0	0	0	0	0	**4**
06:15 - 06:29	0	0	1	0	1	2	2	0	0	0	0	0	0	0	0	**6**
06:30 - 06:44	0	0	0	0	2	0	4	0	0	0	0	0	0	0	0	**6**
06:45 - 06:59	0	0	0	0	2	7	3	1	2	0	0	0	0	0	0	**15**
07:00 - 07:14	0	0	0	0	6	13	14	3	0	0	0	0	0	0	0	**36**
07:15 - 07:29	0	0	0	1	6	10	15	8	0	0	0	0	0	0	0	**40**
07:30 - 07:44	0	0	0	1	1	8	14	14	1	0	0	0	0	0	0	**39**
07:45 - 07:59	0	0	0	0	10	13	27	5	0	0	0	0	0	0	0	**55**
08:00 - 08:14	0	0	1	0	2	25	28	8	0	0	0	0	0	0	0	**64**
08:15 - 08:29	0	0	0	0	1	19	37	4	0	0	0	0	0	0	0	**61**
08:30 - 08:44	0	0	0	1	6	25	18	3	0	1	0	0	0	0	0	**54**
08:45 - 08:59	0	0	0	1	4	10	16	3	2	0	0	0	0	0	0	**36**
09:00 - 09:14	0	0	0	1	7	7	10	4	0	0	0	0	0	0	0	**29**
09:15 - 09:29	0	0	0	0	2	7	6	5	1	0	0	0	0	0	0	**21**
09:30 - 09:44	0	0	0	1	1	9	11	4	0	1	0	0	0	0	0	**27**
09:45 - 09:59	0	0	0	0	4	10	7	3	1	0	0	0	0	0	0	**25**
10:00 - 10:14	0	0	0	2	1	4	14	10	1	1	0	0	0	0	0	**33**
10:15 - 10:29	0	0	0	2	2	2	10	2	1	0	0	0	0	0	0	**19**
10:30 - 10:44	0	0	0	1	3	9	8	0	1	0	0	0	0	0	0	**22**
10:45 - 10:59	0	0	0	0	0	2	10	6	0	0	0	0	0	0	0	**18**
11:00 - 11:14	0	0	0	1	0	2	9	3	0	0	0	0	0	0	0	**15**
11:15 - 11:29	0	0	0	1	3	11	9	1	0	0	0	0	0	0	0	**25**
11:30 - 11:44	0	0	0	1	1	11	10	4	0	0	0	0	0	0	0	**27**
11:45 - 11:59	0	0	0	0	0	1	8	3	0	0	0	0	0	0	0	**12**
12:00 - 12:14	0	0	0	0	3	10	17	4	0	0	0	0	0	0	0	**34**
12:15 - 12:29	0	0	0	0	0	6	18	1	1	0	0	0	0	0	0	**26**
12:30 - 12:44	0	0	0	0	2	11	17	8	1	0	0	0	0	0	0	**39**

Daily Eastbound Speeds (MPH)

Study Date: Tuesday, 09/18/2018
Unit ID: 0166
Location: SW 64TH ST / W OF SW 69TH CT

	0-5	5-10	10-15	15-20	20-25	25-30	30-35	35-40	40-45	45-50	50-55	55-60	60-65	65-70	70-75	Total
12:45 - 12:59	0	0	0	0	2	13	10	5	0	0	0	0	0	0	0	**30**
13:00 - 13:14	0	0	0	0	1	9	11	5	0	0	0	0	0	0	0	**26**
13:15 - 13:29	0	0	0	1	6	16	6	5	0	0	0	0	0	0	0	**34**
13:30 - 13:44	0	0	0	0	1	8	17	3	0	0	0	0	0	0	0	**29**
13:45 - 13:59	0	0	0	1	5	6	13	8	0	0	0	0	0	0	0	**33**
14:00 - 14:14	0	0	0	6	4	14	22	3	0	0	0	0	0	0	0	**49**
14:15 - 14:29	0	0	0	1	6	10	20	6	2	0	0	0	0	0	0	**45**
14:30 - 14:44	0	0	0	1	5	21	25	4	2	0	0	0	0	0	0	**58**
14:45 - 14:59	0	0	0	0	4	36	26	11	2	0	0	0	0	0	0	**79**
15:00 - 15:14	0	0	1	0	6	33	38	6	1	0	0	0	0	0	0	**85**
15:15 - 15:29	0	0	0	1	19	56	34	5	0	0	0	0	0	0	0	**115**
15:30 - 15:44	0	0	0	3	19	59	16	5	3	0	0	0	0	0	0	**105**
15:45 - 15:59	0	0	0	0	12	37	36	5	3	0	0	0	0	0	0	**93**
16:00 - 16:14	0	0	0	1	2	68	35	6	0	0	0	0	0	0	0	**112**
16:15 - 16:29	0	0	0	5	8	47	42	7	0	0	0	0	0	0	0	**109**
16:30 - 16:44	0	0	0	4	24	72	45	8	0	0	0	0	0	0	0	**153**
16:45 - 16:59	0	0	0	1	16	79	41	10	1	0	0	0	0	0	0	**148**
17:00 - 17:14	0	0	0	1	13	79	50	8	0	0	0	0	0	0	0	**151**
17:15 - 17:29	0	0	0	1	25	79	43	5	0	0	0	0	0	0	0	**153**
17:30 - 17:44	0	0	0	5	25	70	42	7	1	0	0	0	0	0	0	**150**
17:45 - 17:59	0	0	0	1	6	88	48	7	3	0	0	0	0	0	0	**153**
18:00 - 18:14	0	0	0	1	21	60	47	6	2	0	0	0	0	0	0	**137**
18:15 - 18:29	0	0	0	0	23	60	50	4	0	0	0	0	0	0	0	**137**
18:30 - 18:44	0	0	0	0	4	46	32	8	0	0	0	0	0	0	0	**90**
18:45 - 18:59	0	0	0	0	2	25	34	3	2	0	0	0	0	0	0	**66**
19:00 - 19:14	0	0	0	0	9	37	20	4	0	0	0	0	0	0	0	**70**
19:15 - 19:29	0	0	0	2	13	23	14	2	1	0	0	0	0	0	0	**55**
19:30 - 19:44	0	0	0	1	1	13	19	1	2	0	0	0	0	0	0	**37**
19:45 - 19:59	0	0	0	0	1	9	12	3	0	0	0	0	0	0	0	**25**
20:00 - 20:14	0	0	0	0	1	11	13	3	0	0	0	0	0	0	0	**28**
20:15 - 20:29	0	0	0	2	4	6	12	3	1	0	0	0	0	0	0	**28**
20:30 - 20:44	0	0	0	1	1	13	5	1	0	0	0	0	0	0	0	**21**
20:45 - 20:59	0	0	0	0	0	10	10	0	0	0	0	0	0	0	0	**20**
21:00 - 21:14	0	0	0	1	2	3	3	3	0	0	0	0	0	0	0	**12**
21:15 - 21:29	0	0	0	0	0	4	7	4	0	0	0	0	0	0	0	**15**
21:30 - 21:44	0	0	0	0	0	2	2	3	1	0	0	0	0	0	0	**8**
21:45 - 21:59	0	0	0	0	1	3	2	2	0	0	0	0	0	0	0	**8**
22:00 - 22:14	0	0	0	0	1	1	4	0	0	0	0	0	0	0	0	**6**
22:15 - 22:29	0	0	0	0	0	2	3	0	0	0	0	0	0	0	0	**5**
22:30 - 22:44	0	0	0	0	0	4	0	0	0	0	0	0	0	0	0	**4**
22:45 - 22:59	0	0	0	0	0	2	0	0	0	0	0	0	0	0	0	**2**
23:00 - 23:14	0	0	0	0	0	0	1	1	0	0	0	0	0	0	0	**2**
23:15 - 23:29	0	0	0	0	0	0	1	0	1	0	0	0	0	0	0	**2**
23:30 - 23:44	0	0	0	0	0	0	2	0	0	0	0	0	0	0	0	**2**
23:45 - 23:59	0	0	0	0	0	0	1	0	0	0	0	0	0	0	0	**1**
Totals	**0**	**0**	**4**	**58**	**366**	**1472**	**1264**	**291**	**40**	**3**	**1**	**0**	**0**	**0**	**0**	**3499**
Percent of Total	**0.0**	**0.0**	**0.1**	**1.7**	**10.5**	**42.1**	**36.1**	**8.3**	**1.1**	**0.1**	**0.0**	**0.0**	**0.0**	**0.0**	**0.0**	**100**
Percent of AM	**0.0**	**0.0**	**0.4**	**2.4**	**9.6**	**29.8**	**42.0**	**13.8**	**1.4**	**0.4**	**0.1**	**0.0**	**0.0**	**0.0**	**0.0**	**100**
Percent of PM	**0.0**	**0.0**	**0.0**	**1.5**	**10.7**	**45.2**	**34.6**	**6.9**	**1.1**	**0.0**	**0.0**	**0.0**	**0.0**	**0.0**	**0.0**	**100**

Daily Eastbound Speeds (MPH)

Study Date: Tuesday, 09/18/2018
Unit ID: 0166
Location: SW 64TH ST / W OF SW 69TH CT

Standard Deviation:	4.8 MPH	Ten Mile Pace:	25 to 34 MPH	85th Percentile:	35.1 MPH
Mean Speed:	30.1 MPH	Percent in Ten Mile Pace:	78.2%	15th Percentile:	25.4 MPH
Median Speed:	30.4 MPH			90th Percentile:	35.9 MPH
Modal Speed:	28.0 MPH			95th Percentile:	38.3 MPH

Daily Eastbound Speeds (MPH)

Study Date: Wednesday, 09/19/2018
Unit ID: 0166
Location: SW 64TH ST / W OF SW 69TH CT

	0-5	5-10	10-15	15-20	20-25	25-30	30-35	35-40	40-45	45-50	50-55	55-60	60-65	65-70	70-75	Total
00:00 - 00:14	0	0	0	0	0	1	1	0	0	0	0	0	0	0	0	**2**
00:15 - 00:29	0	0	0	0	0	0	0	0	0	0	0	0	0	0	0	**0**
00:30 - 00:44	0	0	0	0	1	2	0	1	0	0	0	0	0	0	0	**4**
00:45 - 00:59	0	0	0	0	0	0	0	0	0	0	0	0	0	0	0	**0**
01:00 - 01:14	0	0	0	0	0	0	1	0	0	0	0	0	0	0	0	**1**
01:15 - 01:29	0	0	0	0	0	0	0	0	0	0	0	0	0	0	0	**0**
01:30 - 01:44	0	0	0	0	0	0	0	0	0	0	0	0	0	0	0	**0**
01:45 - 01:59	0	0	0	0	0	0	0	0	0	0	0	0	0	0	0	**0**
02:00 - 02:14	0	0	0	0	0	1	1	0	0	0	0	0	0	0	0	**2**
02:15 - 02:29	0	0	0	0	0	0	0	0	0	0	0	0	0	0	0	**0**
02:30 - 02:44	0	0	0	0	0	0	0	1	0	0	0	0	0	0	0	**1**
02:45 - 02:59	0	0	0	0	0	0	0	0	0	0	0	0	0	0	0	**0**
03:00 - 03:14	0	0	0	0	0	1	0	0	0	0	0	0	0	0	0	**1**
03:15 - 03:29	0	0	0	0	0	0	0	0	0	0	0	0	0	0	0	**0**
03:30 - 03:44	0	0	0	0	0	0	0	0	0	0	0	0	0	0	0	**0**
03:45 - 03:59	0	0	0	0	0	0	0	0	0	0	0	0	0	0	0	**0**
04:00 - 04:14	0	0	0	0	0	0	0	0	0	0	0	0	0	0	0	**0**
04:15 - 04:29	0	0	0	0	0	1	0	0	0	0	0	0	0	0	0	**1**
04:30 - 04:44	0	0	0	0	0	0	0	0	0	0	0	0	0	0	0	**0**
04:45 - 04:59	0	0	0	0	0	0	1	0	0	0	0	0	0	0	0	**1**
05:00 - 05:14	0	0	0	0	0	0	0	0	0	0	0	0	0	0	0	**0**
05:15 - 05:29	0	0	0	0	0	0	0	0	0	0	0	0	0	0	0	**0**
05:30 - 05:44	0	0	0	0	0	2	3	0	0	0	0	0	0	0	0	**5**
05:45 - 05:59	0	0	0	0	2	0	2	0	0	0	0	0	0	0	0	**4**
06:00 - 06:14	0	0	0	0	0	0	3	1	0	0	0	0	0	0	0	**4**
06:15 - 06:29	0	0	0	0	1	2	1	2	0	0	0	0	0	0	0	**6**
06:30 - 06:44	0	0	0	0	0	4	1	1	0	0	0	0	0	0	0	**6**
06:45 - 06:59	0	0	0	0	1	5	0	2	1	0	0	0	0	0	0	**9**
07:00 - 07:14	0	0	0	1	2	4	9	7	1	1	0	0	0	0	0	**25**
07:15 - 07:29	0	0	0	1	2	13	18	6	2	0	0	0	0	0	0	**42**
07:30 - 07:44	0	0	0	0	1	1	15	4	1	1	0	0	0	0	0	**23**
07:45 - 07:59	0	0	0	0	4	12	10	1	0	0	0	0	0	0	0	**27**
08:00 - 08:14	0	0	0	0	4	13	10	6	1	0	0	0	0	0	0	**34**
08:15 - 08:29	0	0	0	0	3	13	12	3	1	0	0	0	0	0	0	**32**
08:30 - 08:44	0	0	1	1	0	8	9	2	0	0	0	0	0	0	0	**21**
08:45 - 08:59	0	0	0	2	1	13	12	3	0	0	0	0	0	0	0	**31**
09:00 - 09:14	0	0	0	0	3	8	3	0	1	0	0	0	0	0	0	**15**
09:15 - 09:29	0	0	0	2	1	4	8	1	2	0	0	0	0	0	0	**18**
09:30 - 09:44	0	0	0	0	0	4	13	7	0	0	0	0	0	0	0	**24**
09:45 - 09:59	0	0	0	2	4	8	7	3	0	0	0	0	0	0	0	**24**
10:00 - 10:14	0	0	0	0	1	6	5	2	2	0	0	0	0	0	0	**16**
10:15 - 10:29	0	0	0	1	3	13	4	2	0	0	0	0	0	0	0	**23**
10:30 - 10:44	0	0	0	0	0	11	8	5	0	0	0	0	0	0	0	**24**
10:45 - 10:59	0	0	0	1	3	4	3	2	0	0	0	0	0	0	0	**13**
11:00 - 11:14	0	0	0	0	2	6	9	6	0	0	0	0	0	0	0	**23**
11:15 - 11:29	0	0	0	0	3	11	9	4	0	0	0	0	0	0	0	**27**
11:30 - 11:44	0	0	0	0	4	11	5	4	2	0	0	0	0	0	0	**26**
11:45 - 11:59	0	0	0	0	4	15	8	2	0	0	0	0	0	0	0	**29**
12:00 - 12:14	0	0	0	0	1	12	11	7	2	0	0	0	0	0	0	**33**
12:15 - 12:29	0	0	0	1	1	7	21	4	1	0	0	0	0	0	0	**35**
12:30 - 12:44	0	0	0	0	5	18	18	4	1	0	0	0	0	0	0	**46**

Daily Eastbound Speeds (MPH)

Study Date: Wednesday, 09/19/2018
Unit ID: 0166
Location: SW 64TH ST / W OF SW 69TH CT

	0-5	5-10	10-15	15-20	20-25	25-30	30-35	35-40	40-45	45-50	50-55	55-60	60-65	65-70	70-75	Total
12:45 - 12:59	0	0	0	1	2	12	14	5	1	0	0	0	0	0	0	**35**
13:00 - 13:14	0	0	0	0	3	11	11	1	1	0	0	0	0	0	0	**27**
13:15 - 13:29	0	0	0	1	1	11	17	8	1	0	0	0	0	0	0	**39**
13:30 - 13:44	0	0	0	0	3	13	12	5	0	0	0	0	0	0	0	**33**
13:45 - 13:59	0	0	0	0	7	11	24	2	1	0	0	0	0	0	0	**45**
14:00 - 14:14	0	0	0	1	8	18	19	4	0	0	0	0	0	0	0	**50**
14:15 - 14:29	0	0	0	1	9	29	17	4	0	0	0	0	0	0	0	**60**
14:30 - 14:44	0	0	0	0	1	12	24	6	0	0	0	0	0	0	0	**43**
14:45 - 14:59	0	0	0	1	1	21	12	6	3	0	0	0	0	0	0	**44**
15:00 - 15:14	0	0	0	0	4	16	31	7	0	0	0	0	0	0	0	**58**
15:15 - 15:29	0	0	0	0	6	34	22	3	0	0	0	0	0	0	0	**65**
15:30 - 15:44	0	0	0	0	9	23	35	4	0	0	0	0	0	0	0	**71**
15:45 - 15:59	0	0	0	1	22	36	28	8	0	0	0	0	0	0	0	**95**
16:00 - 16:14	0	0	0	1	8	35	41	10	1	0	0	0	0	0	0	**96**
16:15 - 16:29	0	0	0	0	2	39	50	10	0	0	0	0	0	0	0	**101**
16:30 - 16:44	0	0	0	0	9	58	38	8	0	0	0	0	0	0	0	**113**
16:45 - 16:59	0	0	0	0	8	57	50	3	1	0	0	0	0	0	0	**119**
17:00 - 17:14	0	0	0	1	8	59	50	14	1	0	0	0	0	0	0	**133**
17:15 - 17:29	0	0	0	1	12	44	74	10	1	1	0	0	0	0	0	**143**
17:30 - 17:44	0	0	0	0	6	51	45	13	1	0	0	0	0	0	0	**116**
17:45 - 17:59	1	0	0	1	11	44	53	11	0	0	0	0	0	0	0	**121**
18:00 - 18:14	0	0	0	2	10	26	52	6	1	0	0	0	0	0	0	**97**
18:15 - 18:29	1	2	3	2	9	45	24	1	0	0	0	0	0	0	0	**87**
18:30 - 18:44	0	0	0	0	7	52	30	3	1	0	0	0	0	0	0	**93**
18:45 - 18:59	0	0	0	0	11	46	29	13	2	0	0	0	0	0	0	**101**
19:00 - 19:14	0	0	0	0	3	20	28	3	1	0	0	0	0	0	0	**55**
19:15 - 19:29	0	0	0	1	4	27	15	1	0	0	0	0	0	0	0	**48**
19:30 - 19:44	0	0	0	0	3	11	21	5	0	0	0	0	0	0	0	**40**
19:45 - 19:59	0	0	0	0	0	9	15	3	1	0	0	0	0	0	0	**28**
20:00 - 20:14	0	0	0	0	3	7	12	9	0	0	0	0	0	0	0	**31**
20:15 - 20:29	0	0	0	0	4	5	2	4	1	0	0	0	0	0	0	**16**
20:30 - 20:44	0	0	0	0	3	8	9	5	1	0	0	0	0	0	0	**26**
20:45 - 20:59	0	0	0	0	0	2	6	3	2	0	0	0	0	0	0	**13**
21:00 - 21:14	0	0	0	1	0	6	6	5	0	0	0	0	0	0	0	**18**
21:15 - 21:29	0	0	0	0	2	5	5	1	0	0	0	0	0	0	0	**13**
21:30 - 21:44	0	0	0	0	1	1	4	1	0	0	0	0	0	0	0	**7**
21:45 - 21:59	0	0	0	0	0	4	5	1	0	0	0	0	0	0	0	**10**
22:00 - 22:14	0	0	0	0	1	0	3	1	0	0	0	0	0	0	0	**5**
22:15 - 22:29	0	0	0	0	0	0	2	2	0	0	0	0	0	0	0	**4**
22:30 - 22:44	0	0	0	0	0	1	6	1	0	0	0	0	0	0	0	**8**
22:45 - 22:59	0	0	0	0	1	1	1	1	0	0	0	0	0	0	0	**4**
23:00 - 23:14	0	0	0	0	0	0	1	1	0	1	0	0	0	0	0	**3**
23:15 - 23:29	0	0	0	0	1	1	2	0	0	1	0	0	0	0	0	**5**
23:30 - 23:44	0	0	0	0	0	1	1	1	0	0	0	0	0	0	0	**3**
23:45 - 23:59	0	0	0	0	0	0	1	0	0	0	0	0	0	0	0	**1**
Totals	**2**	**2**	**4**	**28**	**260**	**1146**	**1188**	**306**	**40**	**5**	**0**	**0**	**0**	**0**	**0**	**2981**
Percent of Total	**0.1**	**0.1**	**0.1**	**0.9**	**8.7**	**38.4**	**39.9**	**10.3**	**1.3**	**0.2**	**0.0**	**0.0**	**0.0**	**0.0**	**0.0**	**100**
Percent of AM	**0.0**	**0.0**	**0.2**	**2.0**	**9.2**	**36.2**	**35.1**	**14.3**	**2.6**	**0.4**	**0.0**	**0.0**	**0.0**	**0.0**	**0.0**	**100**
Percent of PM	**0.1**	**0.1**	**0.1**	**0.7**	**8.6**	**38.9**	**40.9**	**9.4**	**1.1**	**0.1**	**0.0**	**0.0**	**0.0**	**0.0**	**0.0**	**100**

Daily Eastbound Speeds (MPH)

Study Date: Wednesday, 09/19/2018
Unit ID: 0166
Location: SW 64TH ST / W OF SW 69TH CT

Standard Deviation:	4.9 MPH	Ten Mile Pace:	25 to 34 MPH	85th Percentile:	35.5 MPH
Mean Speed:	30.7 MPH	Percent in Ten Mile Pace:	78.3%		
Median Speed:	30.2 MPH			15th Percentile:	25.8 MPH
Modal Speed:	33.0 MPH			90th Percentile:	36.0 MPH
				95th Percentile:	39.0 MPH

Daily Eastbound Speeds (MPH)

Study Date: Thursday, 09/20/2018
Unit ID: 0166
Location: SW 64TH ST / W OF SW 69TH CT

	0-5	5-10	10-15	15-20	20-25	25-30	30-35	35-40	40-45	45-50	50-55	55-60	60-65	65-70	70-75	Total
00:00 - 00:14	0	0	0	0	0	1	1	0	0	0	0	0	0	0	0	**2**
00:15 - 00:29	0	0	0	0	0	1	0	0	0	0	0	0	0	0	0	**1**
00:30 - 00:44	0	0	0	0	0	0	0	0	0	0	0	0	0	0	0	**0**
00:45 - 00:59	0	0	0	0	0	1	0	1	0	0	0	0	0	0	0	**2**
01:00 - 01:14	0	0	0	0	0	1	0	0	0	0	0	0	0	0	0	**1**
01:15 - 01:29	0	0	0	0	1	0	0	0	0	0	0	0	0	0	0	**1**
01:30 - 01:44	0	0	0	0	1	0	2	0	0	0	0	0	0	0	0	**3**
01:45 - 01:59	0	0	0	0	0	0	0	0	0	0	0	0	0	0	0	**0**
02:00 - 02:14	0	0	0	0	0	0	0	0	0	0	0	0	0	0	0	**0**
02:15 - 02:29	0	0	0	0	0	0	0	0	0	0	0	0	0	0	0	**0**
02:30 - 02:44	0	0	0	0	0	0	0	0	0	0	0	0	0	0	0	**0**
02:45 - 02:59	0	0	0	0	0	0	0	0	0	0	0	0	0	0	0	**0**
03:00 - 03:14	0	0	0	0	0	0	0	0	0	0	0	0	0	0	0	**0**
03:15 - 03:29	0	0	0	0	0	0	0	0	0	0	0	0	0	0	0	**0**
03:30 - 03:44	0	0	0	0	0	1	0	0	0	0	0	0	0	0	0	**1**
03:45 - 03:59	0	0	0	0	0	0	0	0	0	0	0	0	0	0	0	**0**
04:00 - 04:14	0	0	0	0	0	0	0	0	0	0	0	0	0	0	0	**0**
04:15 - 04:29	0	0	0	0	0	0	0	1	0	0	0	0	0	0	0	**1**
04:30 - 04:44	0	0	0	0	0	0	2	0	0	0	0	0	0	0	0	**2**
04:45 - 04:59	0	0	0	0	0	0	0	0	0	0	0	0	0	0	0	**0**
05:00 - 05:14	0	0	0	1	0	0	0	1	0	0	0	0	0	0	0	**2**
05:15 - 05:29	0	0	0	0	0	0	0	0	0	0	0	0	0	0	0	**0**
05:30 - 05:44	0	0	0	0	0	0	0	0	1	0	0	0	0	0	0	**1**
05:45 - 05:59	0	0	0	0	0	0	0	1	0	0	0	0	0	0	0	**1**
06:00 - 06:14	0	0	0	0	0	1	0	2	0	0	0	0	0	0	0	**3**
06:15 - 06:29	0	0	0	0	2	2	1	0	0	0	0	0	0	0	0	**5**
06:30 - 06:44	0	0	0	0	3	2	4	1	0	0	0	0	0	0	0	**10**
06:45 - 06:59	0	0	0	0	1	7	6	2	0	0	0	0	0	0	0	**16**
07:00 - 07:14	0	0	0	1	2	10	8	5	0	0	0	0	0	0	0	**26**
07:15 - 07:29	0	0	0	2	3	11	15	9	4	0	0	0	0	0	0	**44**
07:30 - 07:44	0	0	0	1	2	11	19	6	0	1	0	0	0	0	0	**40**
07:45 - 07:59	0	0	0	1	1	22	23	7	0	0	0	0	0	0	0	**54**
08:00 - 08:14	0	0	0	2	8	18	25	12	2	0	0	0	0	0	0	**67**
08:15 - 08:29	0	0	0	0	6	25	25	8	0	0	0	0	0	0	0	**64**
08:30 - 08:44	0	0	0	1	5	13	8	6	1	0	0	0	0	0	0	**34**
08:45 - 08:59	0	0	0	0	0	7	12	9	1	0	0	0	0	0	0	**29**
09:00 - 09:14	1	0	0	2	6	8	5	4	0	0	0	0	0	0	0	**26**
09:15 - 09:29	0	0	0	1	0	5	10	3	0	0	0	0	0	0	0	**19**
09:30 - 09:44	0	0	0	0	0	3	8	7	3	0	0	0	0	0	0	**21**
09:45 - 09:59	0	0	0	0	1	5	12	2	0	0	0	0	0	0	0	**20**
10:00 - 10:14	0	0	0	1	2	10	4	6	1	0	0	0	0	0	0	**24**
10:15 - 10:29	0	1	0	1	4	13	6	4	0	0	0	0	0	0	0	**29**
10:30 - 10:44	0	0	0	0	4	9	9	2	0	0	0	0	0	0	0	**24**
10:45 - 10:59	0	0	0	1	2	4	7	3	0	0	0	0	0	0	0	**17**
11:00 - 11:14	0	0	0	4	3	10	10	2	0	0	0	0	0	0	0	**29**
11:15 - 11:29	0	0	0	0	6	9	10	3	0	0	0	0	0	0	0	**28**
11:30 - 11:44	0	0	0	1	2	6	7	5	1	0	0	0	0	0	0	**22**
11:45 - 11:59	0	0	0	0	3	5	8	4	3	0	0	0	0	0	0	**23**
12:00 - 12:14	0	0	0	0	3	9	9	8	0	0	0	0	0	0	0	**29**
12:15 - 12:29	0	0	0	0	2	7	12	4	0	0	0	0	0	0	0	**25**
12:30 - 12:44	0	0	0	2	4	10	6	3	0	0	0	0	0	0	0	**25**

Daily Eastbound Speeds (MPH)

Study Date: Thursday, 09/20/2018
Unit ID: 0166
Location: SW 64TH ST / W OF SW 69TH CT

	0-5	5-10	10-15	15-20	20-25	25-30	30-35	35-40	40-45	45-50	50-55	55-60	60-65	65-70	70-75	Total
12:45 - 12:59	1	0	0	0	3	12	15	3	1	0	0	0	0	0	0	**35**
13:00 - 13:14	0	0	0	0	5	10	18	2	2	0	0	0	0	0	0	**37**
13:15 - 13:29	0	0	0	0	4	9	16	3	0	0	0	0	0	0	0	**32**
13:30 - 13:44	0	1	0	3	7	8	9	3	0	0	0	0	0	0	0	**31**
13:45 - 13:59	0	0	0	2	5	16	14	8	2	1	0	0	0	0	0	**48**
14:00 - 14:14	0	0	0	2	5	15	17	1	0	1	0	0	0	0	0	**41**
14:15 - 14:29	0	0	0	0	4	26	12	5	0	0	0	0	0	0	0	**47**
14:30 - 14:44	0	0	0	0	4	24	21	4	1	0	0	0	0	0	0	**54**
14:45 - 14:59	0	0	0	3	11	35	29	5	0	0	0	0	0	0	0	**83**
15:00 - 15:14	0	0	0	2	2	36	40	12	0	0	0	0	0	0	0	**92**
15:15 - 15:29	0	0	0	1	14	36	46	6	1	0	0	0	0	0	0	**104**
15:30 - 15:44	0	0	0	0	2	31	39	16	1	0	0	0	0	0	0	**89**
15:45 - 15:59	0	0	0	1	13	44	37	3	1	0	0	0	0	0	0	**99**
16:00 - 16:14	0	0	0	0	18	42	51	10	0	0	0	0	0	0	0	**121**
16:15 - 16:29	0	0	0	2	30	49	39	7	0	0	0	1	0	0	0	**128**
16:30 - 16:44	0	0	0	11	24	53	42	7	0	0	0	0	0	0	0	**137**
16:45 - 16:59	0	0	0	0	26	48	47	11	0	0	0	0	0	0	0	**132**
17:00 - 17:14	0	0	0	0	10	48	62	4	3	0	0	0	0	0	0	**127**
17:15 - 17:29	0	0	0	3	12	72	56	6	2	1	0	0	0	0	0	**152**
17:30 - 17:44	0	0	0	0	21	59	49	13	1	0	0	0	0	0	0	**143**
17:45 - 17:59	0	0	0	3	8	44	52	12	1	0	0	0	0	0	0	**120**
18:00 - 18:14	0	0	0	3	5	33	53	18	1	0	0	0	0	0	0	**113**
18:15 - 18:29	0	0	0	1	15	37	40	11	1	0	0	0	0	0	0	**105**
18:30 - 18:44	0	0	0	0	13	33	28	3	1	0	1	0	0	0	0	**79**
18:45 - 18:59	0	0	1	0	7	32	32	3	1	0	0	0	0	0	0	**76**
19:00 - 19:14	0	0	0	0	5	35	22	5	0	0	0	0	0	0	0	**67**
19:15 - 19:29	0	0	0	0	1	29	9	6	2	0	0	0	0	0	0	**47**
19:30 - 19:44	0	0	0	2	0	25	15	3	0	0	0	0	0	0	0	**45**
19:45 - 19:59	0	0	0	0	1	23	5	3	0	0	0	0	0	0	0	**32**
20:00 - 20:14	0	0	0	1	1	14	11	4	0	0	0	0	0	0	0	**31**
20:15 - 20:29	0	0	0	1	2	7	16	10	1	0	0	0	0	0	0	**37**
20:30 - 20:44	0	0	0	0	1	13	11	1	0	0	0	0	0	0	0	**26**
20:45 - 20:59	0	0	0	1	2	3	8	2	0	0	0	0	0	0	0	**16**
21:00 - 21:14	0	0	0	0	0	3	8	3	1	0	0	0	0	0	0	**15**
21:15 - 21:29	0	0	0	0	2	6	2	3	2	0	0	0	0	0	0	**15**
21:30 - 21:44	0	0	0	0	2	3	3	2	2	0	0	0	0	0	0	**12**
21:45 - 21:59	0	0	0	0	1	5	5	0	0	0	0	0	0	0	0	**11**
22:00 - 22:14	0	0	0	0	1	3	3	4	0	0	0	0	0	0	0	**11**
22:15 - 22:29	0	0	0	0	0	4	4	0	1	0	0	0	0	0	0	**9**
22:30 - 22:44	0	0	0	0	0	2	2	3	0	0	0	0	0	0	0	**7**
22:45 - 22:59	0	0	0	0	0	1	3	0	0	0	0	0	0	0	0	**4**
23:00 - 23:14	0	0	0	0	1	0	0	0	0	0	0	0	0	0	0	**1**
23:15 - 23:29	0	0	0	0	1	1	0	1	0	0	0	0	0	0	0	**3**
23:30 - 23:44	0	0	0	0	0	3	0	0	0	0	0	0	0	0	0	**3**
23:45 - 23:59	0	0	0	0	0	0	3	1	0	0	0	0	0	0	0	**4**
Totals	**2**	**2**	**1**	**64**	**366**	**1279**	**1268**	**358**	**46**	**4**	**1**	**1**	**0**	**0**	**0**	**3392**
Percent of Total	**0.1**	**0.1**	**0.0**	**1.9**	**10.8**	**37.7**	**37.4**	**10.6**	**1.4**	**0.1**	**0.0**	**0.0**	**0.0**	**0.0**	**0.0**	**100**
Percent of AM	**0.1**	**0.1**	**0.0**	**2.9**	**9.8**	**31.9**	**35.7**	**16.8**	**2.5**	**0.1**	**0.0**	**0.0**	**0.0**	**0.0**	**0.0**	**100**
Percent of PM	**0.0**	**0.0**	**0.0**	**1.6**	**11.0**	**39.2**	**37.8**	**9.0**	**1.1**	**0.1**	**0.0**	**0.0**	**0.0**	**0.0**	**0.0**	**100**

Daily Eastbound Speeds (MPH)

Study Date: Thursday, 09/20/2018
Unit ID: 0166
Location: SW 64TH ST / W OF SW 69TH CT

Standard Deviation:	5.1 MPH	Ten Mile Pace:	25 to 34 MPH	85th Percentile:	35.5 MPH
Mean Speed:	30.4 MPH	Percent in Ten Mile Pace:	75.1%		
Median Speed:	30.9 MPH			15th Percentile:	25.3 MPH
Modal Speed:	28.0 MPH			90th Percentile:	36.2 MPH
				95th Percentile:	39.0 MPH

Daily Westbound Speeds (MPH)

Study Date: Tuesday, 09/18/2018
Unit ID: 0212
Location: SW 64TH ST / W OF SW 69TH CT

	0-5	5-10	10-15	15-20	20-25	25-30	30-35	35-40	40-45	45-50	50-55	55-60	60-65	65-70	70-75	Total
00:00 - 00:14	0	0	0	0	1	0	0	1	0	0	0	0	0	0	0	**2**
00:15 - 00:29	0	0	0	0	0	0	0	0	0	0	0	0	0	0	0	**0**
00:30 - 00:44	0	0	0	0	0	0	1	1	0	0	0	0	0	0	0	**2**
00:45 - 00:59	0	0	0	0	0	0	0	0	0	0	0	0	0	0	0	**0**
01:00 - 01:14	0	0	0	0	0	0	0	0	0	0	0	0	0	0	0	**0**
01:15 - 01:29	0	0	0	0	0	0	0	0	0	0	0	0	0	0	0	**0**
01:30 - 01:44	0	0	0	0	0	0	0	0	0	0	0	0	0	0	0	**0**
01:45 - 01:59	0	0	0	1	0	0	0	0	0	0	0	0	0	0	0	**1**
02:00 - 02:14	0	0	0	1	0	0	0	0	0	0	0	0	0	0	0	**1**
02:15 - 02:29	0	0	0	0	0	0	0	0	0	0	0	0	0	0	0	**0**
02:30 - 02:44	0	0	0	0	0	0	0	0	0	0	0	0	0	0	0	**0**
02:45 - 02:59	0	0	0	1	0	0	0	0	0	0	0	0	0	0	0	**1**
03:00 - 03:14	0	0	0	0	0	0	0	0	0	0	0	0	0	0	0	**0**
03:15 - 03:29	0	0	0	0	0	0	0	0	0	0	0	0	0	0	0	**0**
03:30 - 03:44	0	0	0	0	0	1	1	0	0	0	0	0	0	0	0	**2**
03:45 - 03:59	0	0	0	0	0	0	0	0	0	0	0	0	0	0	0	**0**
04:00 - 04:14	0	0	0	0	1	0	0	0	0	1	0	0	0	0	0	**2**
04:15 - 04:29	0	0	0	0	0	0	0	0	0	0	0	0	0	0	0	**0**
04:30 - 04:44	0	0	0	0	0	0	0	0	0	0	0	0	0	0	0	**0**
04:45 - 04:59	0	0	0	0	0	0	0	0	0	0	0	0	0	0	0	**0**
05:00 - 05:14	0	0	0	0	0	0	1	0	0	0	0	0	0	0	0	**1**
05:15 - 05:29	0	0	0	0	0	1	0	1	0	0	0	0	0	0	0	**2**
05:30 - 05:44	0	0	0	0	0	0	0	0	0	0	0	0	0	0	0	**0**
05:45 - 05:59	0	0	0	0	0	2	2	3	0	0	0	0	0	0	0	**7**
06:00 - 06:14	0	0	0	0	1	1	4	3	0	0	0	0	0	0	0	**9**
06:15 - 06:29	0	0	0	0	1	6	7	2	0	0	0	0	0	0	0	**16**
06:30 - 06:44	0	0	0	0	2	5	12	9	1	0	0	0	0	0	0	**29**
06:45 - 06:59	0	0	0	0	8	17	37	10	6	0	0	0	0	0	0	**78**
07:00 - 07:14	0	0	0	0	1	40	54	19	4	0	0	0	0	0	0	**118**
07:15 - 07:29	0	0	0	0	18	43	46	8	1	1	0	0	0	0	0	**117**
07:30 - 07:44	0	0	0	3	19	72	47	18	2	0	0	0	0	0	0	**161**
07:45 - 07:59	0	0	0	1	5	69	50	21	1	0	0	0	0	0	0	**147**
08:00 - 08:14	0	0	0	1	14	63	55	18	3	0	0	0	0	0	0	**154**
08:15 - 08:29	0	0	0	0	2	54	90	26	1	0	0	0	0	0	0	**173**
08:30 - 08:44	0	0	0	0	4	40	64	26	4	0	0	0	0	0	0	**138**
08:45 - 08:59	0	0	0	0	8	44	61	21	6	0	0	0	0	0	0	**140**
09:00 - 09:14	0	0	0	0	1	37	46	16	2	0	0	0	0	0	0	**102**
09:15 - 09:29	0	0	0	0	1	14	32	14	0	0	0	0	0	0	0	**61**
09:30 - 09:44	0	1	0	0	5	17	19	7	0	0	0	0	0	0	0	**49**
09:45 - 09:59	0	0	0	0	0	6	21	9	1	0	0	0	0	0	0	**37**
10:00 - 10:14	0	0	0	0	1	7	14	7	0	0	0	0	0	0	0	**29**
10:15 - 10:29	0	0	0	0	1	9	15	10	1	0	0	0	0	0	0	**36**
10:30 - 10:44	0	0	0	0	2	10	14	3	3	0	0	0	0	0	0	**32**
10:45 - 10:59	0	0	0	0	0	4	20	5	0	0	0	0	0	0	0	**29**
11:00 - 11:14	0	0	0	0	2	4	15	3	1	1	0	0	0	0	0	**26**
11:15 - 11:29	0	0	0	0	0	11	9	7	0	0	0	0	0	0	0	**27**
11:30 - 11:44	0	0	0	0	1	5	14	2	0	0	0	0	0	0	0	**22**
11:45 - 11:59	0	0	0	0	2	14	9	2	1	1	0	0	0	0	0	**29**
12:00 - 12:14	0	0	0	0	1	6	12	2	1	0	0	0	0	0	0	**22**
12:15 - 12:29	0	0	0	0	0	4	2	8	2	0	0	0	0	0	0	**16**
12:30 - 12:44	0	0	0	0	2	5	9	5	3	0	0	0	0	0	0	**24**

Daily Westbound Speeds (MPH)

Study Date: Tuesday, 09/18/2018
Unit ID: 0212
Location: SW 64TH ST / W OF SW 69TH CT

	0-5	5-10	10-15	15-20	20-25	25-30	30-35	35-40	40-45	45-50	50-55	55-60	60-65	65-70	70-75	Total
12:45 - 12:59	0	0	0	0	0	6	9	3	1	0	0	0	0	0	0	**19**
13:00 - 13:14	0	0	0	0	1	4	9	10	3	0	0	0	0	0	0	**27**
13:15 - 13:29	0	0	0	0	0	6	8	7	3	0	1	0	0	0	0	**25**
13:30 - 13:44	0	0	0	0	0	5	7	6	2	0	0	0	0	0	0	**20**
13:45 - 13:59	0	0	0	0	4	5	12	3	1	0	0	0	0	0	0	**25**
14:00 - 14:14	0	0	1	1	1	5	10	5	0	0	0	0	0	0	0	**23**
14:15 - 14:29	0	0	0	0	0	5	9	9	0	0	0	0	0	0	0	**23**
14:30 - 14:44	0	0	0	0	0	11	20	8	1	0	0	0	0	0	0	**40**
14:45 - 14:59	0	0	0	0	3	11	26	14	2	0	0	0	0	0	0	**56**
15:00 - 15:14	0	0	0	0	2	14	22	19	2	0	0	0	0	0	0	**59**
15:15 - 15:29	0	0	0	0	2	16	13	10	1	1	0	0	0	0	0	**43**
15:30 - 15:44	0	0	0	1	2	10	15	9	2	0	0	0	0	0	0	**39**
15:45 - 15:59	0	0	0	0	0	7	13	10	2	0	0	0	0	0	0	**32**
16:00 - 16:14	0	0	0	1	1	4	12	10	1	0	0	0	0	0	0	**29**
16:15 - 16:29	0	0	1	0	0	9	11	3	1	0	0	0	0	0	0	**25**
16:30 - 16:44	0	0	0	0	3	15	14	5	1	1	0	0	0	0	0	**39**
16:45 - 16:59	0	0	0	0	3	2	17	5	1	0	0	0	0	0	0	**28**
17:00 - 17:14	0	0	0	0	1	6	10	6	2	0	1	0	0	0	0	**26**
17:15 - 17:29	0	0	0	1	3	7	11	4	2	0	0	0	0	0	0	**28**
17:30 - 17:44	0	0	0	1	3	11	6	6	2	0	0	0	0	0	0	**29**
17:45 - 17:59	0	0	0	0	1	8	8	7	2	0	0	0	0	0	0	**26**
18:00 - 18:14	0	0	0	0	1	9	10	6	0	0	0	0	0	0	0	**26**
18:15 - 18:29	0	0	0	0	2	2	7	9	1	0	0	0	0	0	0	**21**
18:30 - 18:44	0	0	0	0	3	3	6	4	2	0	0	0	0	0	0	**18**
18:45 - 18:59	0	0	0	0	0	4	11	5	0	0	0	0	0	0	0	**20**
19:00 - 19:14	0	0	0	0	1	5	7	3	0	0	0	0	0	0	0	**16**
19:15 - 19:29	0	0	0	0	1	11	2	4	0	0	0	0	0	0	0	**18**
19:30 - 19:44	0	0	0	0	0	2	4	3	0	1	0	0	0	0	0	**10**
19:45 - 19:59	0	0	0	0	3	3	3	2	0	0	0	0	0	0	0	**11**
20:00 - 20:14	0	0	0	1	3	2	7	3	1	0	0	0	0	0	0	**17**
20:15 - 20:29	0	0	0	0	3	4	4	0	0	0	0	0	0	0	0	**11**
20:30 - 20:44	0	0	0	0	0	5	4	2	0	0	0	0	0	0	0	**11**
20:45 - 20:59	0	0	0	0	0	4	4	2	1	0	0	0	0	0	0	**11**
21:00 - 21:14	0	0	0	0	0	2	4	1	1	0	0	0	0	0	0	**8**
21:15 - 21:29	0	0	0	0	0	4	3	0	1	0	0	0	0	0	0	**8**
21:30 - 21:44	0	0	0	0	0	0	9	1	0	0	0	0	0	0	0	**10**
21:45 - 21:59	0	0	0	0	0	1	2	1	0	0	0	0	0	0	0	**4**
22:00 - 22:14	0	0	0	0	0	2	3	0	0	0	0	0	0	0	0	**5**
22:15 - 22:29	0	0	0	0	0	0	0	0	0	0	0	0	0	0	0	**0**
22:30 - 22:44	0	0	0	0	1	1	1	0	0	0	0	0	0	0	0	**3**
22:45 - 22:59	0	0	0	0	0	2	0	1	0	0	0	0	0	0	0	**3**
23:00 - 23:14	0	0	0	0	0	0	0	0	0	0	0	0	0	0	0	**0**
23:15 - 23:29	0	0	0	0	0	2	0	0	0	0	0	0	0	0	0	**2**
23:30 - 23:44	0	0	0	0	0	1	1	0	0	0	0	0	0	0	0	**2**
23:45 - 23:59	0	0	0	0	0	0	2	0	0	1	0	0	0	0	0	**3**
Totals	**0**	**1**	**2**	**14**	**152**	**847**	**1139**	**493**	**83**	**8**	**2**	**0**	**0**	**0**	**0**	**2741**
Percent of Total	**0.0**	**0.0**	**0.1**	**0.5**	**5.5**	**30.9**	**41.6**	**18.0**	**3.0**	**0.3**	**0.1**	**0.0**	**0.0**	**0.0**	**0.0**	**100**
Percent of AM	**0.0**	**0.1**	**0.0**	**0.4**	**5.7**	**33.5**	**42.7**	**15.3**	**2.1**	**0.2**	**0.0**	**0.0**	**0.0**	**0.0**	**0.0**	**100**
Percent of PM	**0.0**	**0.0**	**0.2**	**0.6**	**5.3**	**26.1**	**39.4**	**23.0**	**4.7**	**0.4**	**0.2**	**0.0**	**0.0**	**0.0**	**0.0**	**100**

Daily Westbound Speeds (MPH)

Study Date: Tuesday, 09/18/2018
Unit ID: 0212
Location: SW 64TH ST / W OF SW 69TH CT

Standard Deviation:	5.1 MPH	Ten Mile Pace:	25 to 34 MPH	85th Percentile:	37.1 MPH
Mean Speed:	32.1 MPH	Percent in Ten Mile Pace:	72.5%	15th Percentile:	26.7 MPH
Median Speed:	31.9 MPH			90th Percentile:	38.8 MPH
Modal Speed:	33.0 MPH			95th Percentile:	40.5 MPH

Daily Westbound Speeds (MPH)

Study Date: Wednesday, 09/19/2018
Unit ID: 0212
Location: SW 64TH ST / W OF SW 69TH CT

	0-5	5-10	10-15	15-20	20-25	25-30	30-35	35-40	40-45	45-50	50-55	55-60	60-65	65-70	70-75	Total
00:00 - 00:14	0	0	0	0	0	0	0	0	0	0	0	0	0	0	0	**0**
00:15 - 00:29	0	0	0	0	0	0	0	0	0	0	0	0	0	0	0	**0**
00:30 - 00:44	0	0	0	0	0	1	0	0	0	0	0	0	0	0	0	**1**
00:45 - 00:59	0	0	0	0	0	0	0	0	0	0	0	0	0	0	0	**0**
01:00 - 01:14	0	0	0	0	0	0	1	0	0	0	0	0	0	0	0	**1**
01:15 - 01:29	0	0	0	0	0	0	0	1	0	0	0	0	0	0	0	**1**
01:30 - 01:44	0	0	0	0	0	0	0	0	0	0	0	0	0	0	0	**0**
01:45 - 01:59	0	0	0	0	0	0	0	0	0	0	0	0	0	0	0	**0**
02:00 - 02:14	0	0	0	0	0	0	0	0	0	0	0	0	0	0	0	**0**
02:15 - 02:29	0	0	0	0	0	0	0	0	0	0	0	0	0	0	0	**0**
02:30 - 02:44	0	0	0	0	0	0	0	0	0	0	0	0	0	0	0	**0**
02:45 - 02:59	0	0	0	0	0	0	0	0	0	0	0	0	0	0	0	**0**
03:00 - 03:14	0	0	0	0	0	0	0	0	0	0	0	0	0	0	0	**0**
03:15 - 03:29	0	0	0	0	0	0	0	1	0	0	0	0	0	0	0	**1**
03:30 - 03:44	0	0	0	0	0	0	0	0	0	0	0	0	0	0	0	**0**
03:45 - 03:59	0	0	0	0	0	0	0	0	0	0	0	0	0	0	0	**0**
04:00 - 04:14	0	0	0	0	0	0	0	0	0	0	0	0	0	0	0	**0**
04:15 - 04:29	0	0	0	0	1	0	0	0	0	0	0	0	0	0	0	**1**
04:30 - 04:44	0	0	0	0	0	0	0	0	0	0	0	0	0	0	0	**0**
04:45 - 04:59	0	0	0	0	0	2	2	0	0	0	0	0	0	0	0	**4**
05:00 - 05:14	0	0	0	0	1	0	0	0	0	0	0	0	0	0	0	**1**
05:15 - 05:29	0	0	0	0	0	0	1	0	0	0	0	0	0	0	0	**1**
05:30 - 05:44	0	0	0	0	0	2	1	0	1	1	0	0	0	0	0	**5**
05:45 - 05:59	0	0	0	0	0	0	2	1	0	0	0	0	0	0	0	**3**
06:00 - 06:14	0	0	0	0	0	2	3	1	1	1	0	0	0	0	0	**8**
06:15 - 06:29	0	0	0	0	1	3	7	3	2	0	0	0	0	0	0	**16**
06:30 - 06:44	0	0	0	0	2	13	12	7	0	1	0	0	0	0	0	**35**
06:45 - 06:59	0	0	0	0	0	13	25	20	4	0	0	0	0	0	0	**62**
07:00 - 07:14	0	0	0	0	3	20	51	14	1	0	0	0	0	0	0	**89**
07:15 - 07:29	0	0	0	0	10	28	56	20	2	0	0	0	0	0	0	**116**
07:30 - 07:44	0	0	0	1	19	40	45	9	2	0	0	0	0	0	0	**116**
07:45 - 07:59	0	0	0	0	2	28	47	25	4	0	0	0	0	0	0	**106**
08:00 - 08:14	0	0	2	3	8	39	45	14	6	2	0	0	0	0	0	**119**
08:15 - 08:29	0	0	0	0	4	47	75	17	1	0	0	0	0	0	0	**144**
08:30 - 08:44	0	0	0	0	4	61	66	20	5	0	0	0	0	0	0	**156**
08:45 - 08:59	0	0	1	0	1	31	57	13	2	0	0	0	0	0	0	**105**
09:00 - 09:14	0	0	0	0	3	29	27	12	1	1	0	0	0	0	0	**73**
09:15 - 09:29	0	0	0	0	8	14	26	9	4	1	0	0	0	0	0	**62**
09:30 - 09:44	0	0	0	0	1	14	21	13	3	2	0	0	0	0	0	**54**
09:45 - 09:59	0	0	0	0	1	9	18	9	0	0	0	0	0	0	0	**37**
10:00 - 10:14	0	0	0	0	1	9	7	8	2	1	0	0	0	0	0	**28**
10:15 - 10:29	0	0	0	1	3	6	9	4	0	0	0	0	0	0	0	**23**
10:30 - 10:44	0	0	0	0	1	8	13	3	1	0	0	0	0	0	0	**26**
10:45 - 10:59	0	0	0	0	0	11	13	2	1	0	0	0	0	0	0	**27**
11:00 - 11:14	0	0	0	0	1	6	9	6	2	0	0	0	0	0	0	**24**
11:15 - 11:29	0	0	0	0	1	7	6	3	0	0	0	0	0	0	0	**17**
11:30 - 11:44	0	1	0	1	4	4	13	6	0	0	0	0	0	0	0	**29**
11:45 - 11:59	0	0	0	1	1	10	8	6	2	0	0	0	0	0	0	**28**
12:00 - 12:14	0	0	0	0	1	9	9	6	0	0	0	0	0	0	0	**25**
12:15 - 12:29	0	0	0	0	0	3	16	3	0	0	0	0	0	0	0	**22**
12:30 - 12:44	0	0	1	0	3	10	13	7	1	0	0	0	0	0	0	**35**

Daily Westbound Speeds (MPH)

Study Date: Wednesday, 09/19/2018
Unit ID: 0212
Location: SW 64TH ST / W OF SW 69TH CT

	0-5	5-10	10-15	15-20	20-25	25-30	30-35	35-40	40-45	45-50	50-55	55-60	60-65	65-70	70-75	Total
12:45 - 12:59	0	0	0	1	3	12	30	3	1	0	0	0	0	0	0	**50**
13:00 - 13:14	0	0	0	0	2	12	16	9	2	0	0	0	0	0	0	**41**
13:15 - 13:29	0	0	0	0	1	12	12	3	2	0	0	0	0	0	0	**30**
13:30 - 13:44	0	0	0	0	0	2	12	6	0	0	0	0	0	0	0	**20**
13:45 - 13:59	0	0	0	1	0	5	7	7	3	0	0	0	0	0	0	**23**
14:00 - 14:14	0	0	1	0	3	6	12	2	1	0	0	0	0	0	0	**25**
14:15 - 14:29	0	0	0	0	1	9	11	2	0	0	0	0	0	0	0	**23**
14:30 - 14:44	0	0	0	0	1	7	9	3	1	1	0	0	0	0	0	**22**
14:45 - 14:59	0	0	0	0	2	3	10	11	2	0	0	0	0	0	0	**28**
15:00 - 15:14	0	0	0	2	2	4	15	7	1	0	0	0	0	0	0	**31**
15:15 - 15:29	0	0	0	0	2	6	13	12	3	1	0	0	0	0	0	**37**
15:30 - 15:44	0	0	0	1	0	6	12	10	3	0	0	0	0	0	0	**32**
15:45 - 15:59	0	0	0	0	0	8	18	5	0	0	0	0	0	0	0	**31**
16:00 - 16:14	0	0	0	0	1	6	11	3	0	0	0	0	0	0	0	**21**
16:15 - 16:29	0	0	0	1	1	3	11	5	2	0	0	0	0	0	0	**23**
16:30 - 16:44	0	0	0	0	1	9	12	4	0	0	0	0	0	0	0	**26**
16:45 - 16:59	0	0	0	0	2	10	12	6	0	0	0	0	0	0	0	**30**
17:00 - 17:14	0	0	0	0	0	7	15	7	1	0	0	0	0	0	0	**30**
17:15 - 17:29	0	0	0	1	2	8	18	6	2	0	0	0	0	0	0	**37**
17:30 - 17:44	0	0	1	0	1	4	8	5	1	0	0	0	0	0	0	**20**
17:45 - 17:59	0	0	1	0	0	2	11	5	2	0	0	0	0	0	0	**21**
18:00 - 18:14	0	0	0	0	0	8	17	5	1	0	0	0	0	0	0	**31**
18:15 - 18:29	0	0	0	0	0	8	13	4	0	0	0	0	0	0	0	**25**
18:30 - 18:44	0	0	0	0	1	2	8	6	3	0	0	0	0	0	0	**20**
18:45 - 18:59	0	0	0	0	1	7	7	9	1	0	0	0	0	0	0	**25**
19:00 - 19:14	0	0	0	0	0	4	6	2	3	0	0	0	0	0	0	**15**
19:15 - 19:29	0	0	0	0	0	7	7	2	2	0	0	0	0	0	0	**18**
19:30 - 19:44	0	0	0	0	0	4	7	4	0	0	0	0	0	0	0	**15**
19:45 - 19:59	0	0	0	0	1	4	7	6	3	0	0	0	0	0	0	**21**
20:00 - 20:14	0	0	0	0	1	6	3	2	1	0	0	0	0	0	0	**13**
20:15 - 20:29	0	0	0	0	0	3	5	1	0	0	0	0	0	0	0	**9**
20:30 - 20:44	0	0	0	0	0	7	3	1	0	0	0	0	0	0	0	**11**
20:45 - 20:59	0	0	0	0	0	3	5	1	0	0	0	0	0	0	0	**9**
21:00 - 21:14	0	0	0	0	1	1	8	1	1	0	0	0	0	0	0	**12**
21:15 - 21:29	0	0	0	0	0	4	3	1	0	0	0	0	0	0	0	**8**
21:30 - 21:44	0	0	0	0	0	1	5	3	0	0	0	0	0	0	0	**9**
21:45 - 21:59	0	0	0	0	1	3	1	0	0	0	0	0	0	0	0	**5**
22:00 - 22:14	0	0	0	0	0	1	1	0	0	0	0	0	0	0	0	**2**
22:15 - 22:29	0	0	0	0	0	0	1	0	0	0	0	0	0	0	0	**1**
22:30 - 22:44	0	0	0	0	0	0	1	0	0	0	0	0	0	0	0	**1**
22:45 - 22:59	0	0	0	0	0	0	2	0	0	0	0	0	0	0	0	**2**
23:00 - 23:14	0	0	0	1	0	0	2	2	0	0	0	0	0	0	0	**5**
23:15 - 23:29	0	0	0	0	0	0	1	0	0	0	0	0	0	0	0	**1**
23:30 - 23:44	0	0	0	0	0	0	1	0	0	0	0	0	0	0	0	**1**
23:45 - 23:59	0	0	0	0	1	0	0	0	0	0	0	0	0	0	0	**1**
Totals	**0**	**1**	**7**	**15**	**117**	**693**	**1093**	**434**	**90**	**12**	**0**	**0**	**0**	**0**	**0**	**2462**
Percent of Total	**0.0**	**0.0**	**0.3**	**0.6**	**4.8**	**28.1**	**44.4**	**17.6**	**3.7**	**0.5**	**0.0**	**0.0**	**0.0**	**0.0**	**0.0**	**100**
Percent of AM	**0.0**	**0.1**	**0.2**	**0.5**	**5.3**	**30.1**	**43.8**	**16.3**	**3.1**	**0.7**	**0.0**	**0.0**	**0.0**	**0.0**	**0.0**	**100**
Percent of PM	**0.0**	**0.0**	**0.4**	**0.8**	**3.8**	**25.0**	**45.3**	**19.8**	**4.6**	**0.2**	**0.0**	**0.0**	**0.0**	**0.0**	**0.0**	**100**

Daily Westbound Speeds (MPH)

Study Date: Wednesday, 09/19/2018
Unit ID: 0212
Location: SW 64TH ST / W OF SW 69TH CT

Standard Deviation:	5.1 MPH	Ten Mile Pace:	25 to 34 MPH	85th Percentile:	37.3 MPH
Mean Speed:	32.3 MPH	Percent in Ten Mile Pace:	72.5%		
Median Speed:	32.2 MPH			15th Percentile:	27.0 MPH
Modal Speed:	33.0 MPH			90th Percentile:	39.0 MPH
				95th Percentile:	40.7 MPH

Daily Westbound Speeds (MPH)

Study Date: Thursday, 09/20/2018
Unit ID: 0212
Location: SW 64TH ST / W OF SW 69TH CT

	0-5	5-10	10-15	15-20	20-25	25-30	30-35	35-40	40-45	45-50	50-55	55-60	60-65	65-70	70-75	Total
00:00 - 00:14	0	0	0	0	0	0	0	0	0	0	0	0	0	0	0	**0**
00:15 - 00:29	0	0	0	0	0	0	0	0	0	0	0	0	0	0	0	**0**
00:30 - 00:44	0	0	0	0	0	0	0	0	0	0	0	0	0	0	0	**0**
00:45 - 00:59	0	0	0	0	0	0	0	0	0	0	0	0	0	0	0	**0**
01:00 - 01:14	0	0	0	0	0	0	0	0	0	0	0	0	0	0	0	**0**
01:15 - 01:29	0	0	0	0	0	0	0	0	0	0	0	0	0	0	0	**0**
01:30 - 01:44	0	0	0	0	0	1	0	0	0	0	0	0	0	0	0	**1**
01:45 - 01:59	0	0	0	0	1	0	0	0	0	0	0	0	0	0	0	**1**
02:00 - 02:14	0	0	0	0	0	0	0	0	0	0	0	0	0	0	0	**0**
02:15 - 02:29	0	0	0	0	0	0	0	0	0	0	0	0	0	0	0	**0**
02:30 - 02:44	0	0	0	0	0	0	0	1	0	0	0	0	0	0	0	**1**
02:45 - 02:59	0	0	0	0	0	0	0	0	0	0	0	0	0	0	0	**0**
03:00 - 03:14	0	0	0	0	0	0	0	0	0	0	0	0	0	0	0	**0**
03:15 - 03:29	0	0	0	0	0	0	0	0	0	0	0	0	0	0	0	**0**
03:30 - 03:44	0	0	0	0	0	0	0	0	0	0	0	0	0	0	0	**0**
03:45 - 03:59	0	0	0	0	0	0	0	0	0	0	0	0	0	0	0	**0**
04:00 - 04:14	0	0	0	0	0	0	0	0	0	0	0	0	0	0	0	**0**
04:15 - 04:29	0	0	0	0	0	0	1	0	0	0	0	0	0	0	0	**1**
04:30 - 04:44	0	0	0	0	0	0	0	0	0	0	0	0	0	0	0	**0**
04:45 - 04:59	0	0	0	0	0	0	0	0	0	0	0	0	0	0	0	**0**
05:00 - 05:14	0	0	0	0	0	0	0	2	0	0	0	0	0	0	0	**2**
05:15 - 05:29	0	0	0	0	1	0	1	1	1	0	0	0	0	0	0	**4**
05:30 - 05:44	0	0	0	0	1	1	3	2	0	0	0	0	0	0	0	**7**
05:45 - 05:59	0	0	0	0	0	0	5	2	1	0	1	0	0	0	0	**9**
06:00 - 06:14	0	0	0	0	0	0	4	5	2	0	0	0	0	0	0	**11**
06:15 - 06:29	0	0	0	0	1	2	8	0	1	0	0	0	0	0	0	**12**
06:30 - 06:44	0	0	0	0	1	12	22	8	2	0	0	0	0	0	0	**45**
06:45 - 06:59	0	0	0	0	2	13	45	15	4	0	0	0	0	0	0	**79**
07:00 - 07:14	0	0	0	0	7	18	48	16	1	0	0	0	0	0	0	**90**
07:15 - 07:29	0	0	0	0	4	57	55	8	0	0	0	0	0	0	0	**124**
07:30 - 07:44	0	0	0	2	25	67	56	11	0	0	0	0	0	0	0	**161**
07:45 - 07:59	0	0	0	1	2	42	55	18	3	0	0	0	0	0	0	**121**
08:00 - 08:14	0	0	0	0	13	63	75	24	1	0	0	0	0	0	0	**176**
08:15 - 08:29	0	5	11	14	35	65	33	3	0	0	0	0	0	0	0	**166**
08:30 - 08:44	0	1	2	2	12	50	50	18	2	0	0	0	0	0	0	**137**
08:45 - 08:59	0	0	0	0	5	22	66	20	3	0	0	0	0	0	0	**116**
09:00 - 09:14	0	0	0	0	3	28	53	21	1	0	0	0	0	0	0	**106**
09:15 - 09:29	0	0	0	0	3	6	32	9	3	0	0	0	0	0	0	**53**
09:30 - 09:44	0	0	0	0	0	18	14	10	1	0	0	0	0	0	0	**43**
09:45 - 09:59	0	0	0	0	3	17	15	8	0	0	1	0	0	0	0	**44**
10:00 - 10:14	0	0	0	0	6	9	12	3	0	0	0	0	0	0	0	**30**
10:15 - 10:29	0	0	0	3	1	9	9	3	0	1	0	0	0	0	0	**26**
10:30 - 10:44	0	0	0	1	1	6	8	10	2	0	0	0	0	0	0	**28**
10:45 - 10:59	0	0	0	0	2	6	12	4	1	0	0	0	0	0	0	**25**
11:00 - 11:14	0	0	0	1	3	3	14	5	0	0	0	0	0	0	0	**26**
11:15 - 11:29	0	0	0	0	0	4	8	3	0	0	0	0	0	0	0	**15**
11:30 - 11:44	0	0	0	0	1	3	14	5	1	0	0	0	0	0	0	**24**
11:45 - 11:59	0	0	0	1	3	5	10	9	0	2	0	0	0	0	0	**30**
12:00 - 12:14	0	0	0	0	1	10	12	5	1	0	0	0	0	0	0	**29**
12:15 - 12:29	0	0	0	0	0	5	8	4	0	0	0	0	0	0	0	**17**
12:30 - 12:44	0	0	0	0	0	5	9	4	1	0	0	0	0	0	0	**19**

Daily Westbound Speeds (MPH)

Study Date: Thursday, 09/20/2018
Unit ID: 0212
Location: SW 64TH ST / W OF SW 69TH CT

	0-5	5-10	10-15	15-20	20-25	25-30	30-35	35-40	40-45	45-50	50-55	55-60	60-65	65-70	70-75	Total
12:45 - 12:59	0	0	0	0	4	10	13	3	1	0	0	0	0	0	0	**31**
13:00 - 13:14	0	0	0	0	2	9	6	2	2	0	0	0	0	0	0	**21**
13:15 - 13:29	0	0	0	0	0	6	9	9	1	0	0	0	0	0	0	**25**
13:30 - 13:44	0	0	0	0	0	2	11	10	1	0	0	0	0	0	0	**24**
13:45 - 13:59	0	0	0	0	2	5	12	3	0	0	0	0	0	0	0	**22**
14:00 - 14:14	0	0	0	0	5	5	21	1	0	0	0	0	0	0	0	**32**
14:15 - 14:29	0	0	0	0	0	11	5	0	1	0	0	0	0	0	0	**17**
14:30 - 14:44	0	0	0	0	0	14	16	5	2	1	0	0	0	0	0	**38**
14:45 - 14:59	0	0	0	0	6	17	21	9	0	0	0	0	0	0	0	**53**
15:00 - 15:14	0	0	0	0	0	21	23	9	0	1	0	0	0	0	0	**54**
15:15 - 15:29	0	0	0	0	3	12	21	10	4	0	0	0	0	0	0	**50**
15:30 - 15:44	0	0	0	0	1	6	10	12	2	0	0	0	0	0	0	**31**
15:45 - 15:59	0	0	0	2	2	6	17	3	0	0	0	0	0	0	0	**30**
16:00 - 16:14	0	0	0	0	1	6	17	6	4	0	0	0	0	0	0	**34**
16:15 - 16:29	0	0	0	1	3	10	12	5	0	0	0	0	0	0	0	**31**
16:30 - 16:44	0	0	0	1	3	11	7	5	4	0	0	0	0	0	0	**31**
16:45 - 16:59	0	0	0	0	2	10	13	5	1	0	0	0	0	0	0	**31**
17:00 - 17:14	0	0	0	0	1	2	15	7	1	0	0	0	0	0	0	**26**
17:15 - 17:29	0	0	0	0	0	10	15	8	3	0	0	0	0	0	0	**36**
17:30 - 17:44	0	0	0	0	0	6	4	6	1	0	0	0	0	0	0	**17**
17:45 - 17:59	0	0	0	1	1	6	10	8	0	0	0	0	0	0	0	**26**
18:00 - 18:14	0	0	0	0	2	1	9	6	0	2	0	0	0	0	0	**20**
18:15 - 18:29	0	0	0	0	0	5	13	9	2	0	0	0	0	0	0	**29**
18:30 - 18:44	0	0	0	0	0	10	13	3	1	1	0	0	0	0	0	**28**
18:45 - 18:59	0	0	0	1	1	4	7	5	0	0	0	0	0	0	0	**18**
19:00 - 19:14	0	0	0	0	0	3	10	4	0	0	0	0	0	0	0	**17**
19:15 - 19:29	0	0	0	0	1	5	4	7	0	0	0	0	0	0	0	**17**
19:30 - 19:44	0	0	0	0	0	5	8	2	0	0	0	0	0	0	0	**15**
19:45 - 19:59	0	0	0	0	0	1	5	1	0	0	0	0	0	0	0	**7**
20:00 - 20:14	0	0	0	0	2	6	4	4	1	0	0	0	0	0	0	**17**
20:15 - 20:29	0	0	0	0	3	2	6	2	1	0	0	0	0	0	0	**14**
20:30 - 20:44	0	0	0	0	0	7	1	1	0	0	0	0	0	0	0	**9**
20:45 - 20:59	0	0	0	0	0	3	5	2	0	0	0	0	0	0	0	**10**
21:00 - 21:14	0	0	0	0	0	2	1	1	1	0	0	0	0	0	0	**5**
21:15 - 21:29	0	0	0	0	0	0	4	2	0	0	0	0	0	0	0	**6**
21:30 - 21:44	0	0	0	0	0	0	3	2	0	0	0	0	0	0	0	**5**
21:45 - 21:59	0	0	0	0	1	5	5	1	0	0	0	0	0	0	0	**12**
22:00 - 22:14	0	0	0	0	0	2	2	2	0	1	0	0	0	0	0	**7**
22:15 - 22:29	0	0	0	0	1	5	0	1	0	0	0	0	0	0	0	**7**
22:30 - 22:44	0	0	0	0	0	1	0	0	0	0	0	0	0	0	0	**1**
22:45 - 22:59	0	0	0	0	0	0	5	2	0	0	0	0	0	0	0	**7**
23:00 - 23:14	0	0	0	0	0	0	0	1	0	0	0	0	0	0	0	**1**
23:15 - 23:29	0	0	0	0	0	1	0	0	1	0	0	0	0	0	0	**2**
23:30 - 23:44	0	0	0	0	0	1	1	1	0	0	0	0	0	0	0	**3**
23:45 - 23:59	0	0	0	0	0	0	1	0	0	0	0	0	0	0	0	**1**
Totals	**0**	**6**	**13**	**31**	**184**	**801**	**1142**	**442**	**67**	**9**	**2**	**0**	**0**	**0**	**0**	**2697**
Percent of Total	**0.0**	**0.2**	**0.5**	**1.1**	**6.8**	**29.7**	**42.3**	**16.4**	**2.5**	**0.3**	**0.1**	**0.0**	**0.0**	**0.0**	**0.0**	**100**
Percent of AM	**0.0**	**0.4**	**0.8**	**1.5**	**7.9**	**30.7**	**42.5**	**14.2**	**1.8**	**0.2**	**0.1**	**0.0**	**0.0**	**0.0**	**0.0**	**100**
Percent of PM	**0.0**	**0.0**	**0.0**	**0.6**	**4.9**	**27.9**	**42.1**	**20.1**	**3.8**	**0.6**	**0.0**	**0.0**	**0.0**	**0.0**	**0.0**	**100**

Daily Westbound Speeds (MPH)

Study Date: Thursday, 09/20/2018
Unit ID: 0212
Location: SW 64TH ST / W OF SW 69TH CT

Standard Deviation:	5.4 MPH	Ten Mile Pace:	25 to 34 MPH	85th Percentile:	36.6 MPH
Mean Speed:	31.6 MPH	Percent in Ten Mile Pace:	72.0%		
Median Speed:	31.6 MPH			15th Percentile:	26.3 MPH
Modal Speed:	33.0 MPH			90th Percentile:	38.4 MPH
				95th Percentile:	40.2 MPH

Daily Eastbound Speeds (MPH)

Study Date: Tuesday, 10/02/2018
Unit ID: 0192
Location: SW 60TH ST / E OF SW 69TH CT

	0-5	5-10	10-15	15-20	20-25	25-30	30-35	35-40	40-45	45-50	50-55	55-60	60-65	65-70	70-75	Total
00:00 - 00:14	0	0	0	0	0	0	0	0	0	0	0	0	0	0	0	**0**
00:15 - 00:29	0	0	0	0	0	0	0	0	0	0	0	0	0	0	0	**0**
00:30 - 00:44	0	0	0	0	0	0	0	0	0	0	0	0	0	0	0	**0**
00:45 - 00:59	0	0	0	0	0	0	0	0	0	0	0	0	0	0	0	**0**
01:00 - 01:14	0	0	0	0	0	0	0	0	0	0	0	0	0	0	0	**0**
01:15 - 01:29	0	0	0	0	0	0	0	0	0	0	0	0	0	0	0	**0**
01:30 - 01:44	0	0	0	0	0	0	0	0	0	0	0	0	0	0	0	**0**
01:45 - 01:59	0	0	0	0	0	0	0	0	0	0	0	0	0	0	0	**0**
02:00 - 02:14	0	0	0	0	0	0	0	0	0	0	0	0	0	0	0	**0**
02:15 - 02:29	0	0	0	0	0	0	0	0	0	0	0	0	0	0	0	**0**
02:30 - 02:44	0	0	0	0	0	0	0	0	0	0	0	0	0	0	0	**0**
02:45 - 02:59	0	0	0	0	0	0	0	0	0	0	0	0	0	0	0	**0**
03:00 - 03:14	0	0	0	0	0	0	0	0	0	0	0	0	0	0	0	**0**
03:15 - 03:29	0	0	0	0	0	0	0	0	0	0	0	0	0	0	0	**0**
03:30 - 03:44	0	0	0	0	0	0	0	0	0	0	0	0	0	0	0	**0**
03:45 - 03:59	0	0	0	0	0	0	0	0	0	0	0	0	0	0	0	**0**
04:00 - 04:14	0	0	0	0	0	0	0	0	0	0	0	0	0	0	0	**0**
04:15 - 04:29	0	0	0	0	0	0	0	0	0	0	0	0	0	0	0	**0**
04:30 - 04:44	0	0	0	0	0	0	0	0	0	0	0	0	0	0	0	**0**
04:45 - 04:59	0	0	0	0	0	0	0	0	0	0	0	0	0	0	0	**0**
05:00 - 05:14	0	0	0	0	0	0	0	0	0	0	0	0	0	0	0	**0**
05:15 - 05:29	0	0	0	0	0	0	0	0	0	0	0	0	0	0	0	**0**
05:30 - 05:44	0	0	0	0	1	0	0	0	0	0	0	0	0	0	0	**1**
05:45 - 05:59	0	0	0	0	0	0	0	0	0	0	0	0	0	0	0	**0**
06:00 - 06:14	0	0	0	0	2	0	0	0	0	0	0	0	0	0	0	**2**
06:15 - 06:29	0	0	1	1	0	0	0	0	0	0	0	0	0	0	0	**2**
06:30 - 06:44	0	0	2	1	2	1	0	0	0	0	0	0	0	0	0	**6**
06:45 - 06:59	0	0	1	4	3	0	0	0	0	0	0	0	0	0	0	**8**
07:00 - 07:14	0	0	1	14	10	0	0	0	0	0	0	0	0	0	0	**25**
07:15 - 07:29	0	0	19	24	2	0	0	0	0	0	0	0	0	0	0	**45**
07:30 - 07:44	1	3	17	22	1	0	0	0	0	0	0	0	0	0	0	**44**
07:45 - 07:59	0	5	34	12	4	0	0	0	0	0	0	0	0	0	0	**55**
08:00 - 08:14	7	5	0	0	0	0	0	0	0	0	0	0	0	0	0	**12**
08:15 - 08:29	12	19	4	4	3	0	0	0	0	0	0	0	0	0	0	**42**
08:30 - 08:44	0	0	2	8	9	0	0	0	0	0	0	0	0	0	0	**19**
08:45 - 08:59	0	1	2	4	3	0	0	0	0	0	0	0	0	0	0	**10**
09:00 - 09:14	0	0	0	1	4	0	0	0	0	0	0	0	0	0	0	**5**
09:15 - 09:29	0	0	2	0	1	0	0	0	0	0	0	0	0	0	0	**3**
09:30 - 09:44	0	0	0	4	1	0	0	0	0	0	0	0	0	0	0	**5**
09:45 - 09:59	0	0	1	0	1	1	0	0	0	0	0	0	0	0	0	**3**
10:00 - 10:14	0	0	0	1	0	0	0	0	0	0	0	0	0	0	0	**1**
10:15 - 10:29	0	0	1	1	0	0	0	0	0	0	0	0	0	0	0	**2**
10:30 - 10:44	0	1	2	2	0	0	0	0	0	0	0	0	0	0	0	**5**
10:45 - 10:59	0	0	1	0	1	0	0	0	0	0	0	0	0	0	0	**2**
11:00 - 11:14	0	0	0	0	2	0	0	0	0	0	0	0	0	0	0	**2**
11:15 - 11:29	0	0	0	0	0	0	0	0	0	0	0	0	0	0	0	**0**
11:30 - 11:44	0	0	2	1	1	0	0	0	0	0	0	0	0	0	0	**4**
11:45 - 11:59	0	0	1	1	1	0	0	0	0	0	0	0	0	0	0	**3**
12:00 - 12:14	0	0	2	1	0	0	0	0	0	0	0	0	0	0	0	**3**
12:15 - 12:29	0	0	0	1	0	0	0	0	0	0	0	0	0	0	0	**1**
12:30 - 12:44	0	0	1	0	1	0	0	0	0	0	0	0	0	0	0	**2**

Printed: 10/05/2018 at 15:18
TrafficViewer Pro v1.6.4.124
PicoCount 2500 V2.37 (s/n# 17032298)

Daily Eastbound Speeds (MPH)

Study Date: Tuesday, 10/02/2018
Unit ID: 0192
Location: SW 60TH ST / E OF SW 69TH CT

	0-5	5-10	10-15	15-20	20-25	25-30	30-35	35-40	40-45	45-50	50-55	55-60	60-65	65-70	70-75	Total
12:45 - 12:59	0	0	2	0	3	0	0	0	0	0	0	0	0	0	0	**5**
13:00 - 13:14	0	0	1	2	1	0	0	0	0	0	0	0	0	0	0	**4**
13:15 - 13:29	0	0	3	6	1	0	0	0	0	0	0	0	0	0	0	**10**
13:30 - 13:44	0	0	1	9	1	0	0	0	0	0	0	0	0	0	0	**11**
13:45 - 13:59	0	1	4	3	1	0	0	0	0	0	0	0	0	0	0	**9**
14:00 - 14:14	0	0	8	2	0	0	0	0	0	0	0	0	0	0	0	**10**
14:15 - 14:29	0	0	5	7	2	0	0	0	0	0	0	0	0	0	0	**14**
14:30 - 14:44	1	5	5	5	1	0	0	0	0	0	0	0	0	0	0	**17**
14:45 - 14:59	0	3	3	0	0	0	0	0	0	0	0	0	0	0	0	**6**
15:00 - 15:14	6	5	2	0	0	0	0	1	0	0	0	0	0	0	0	**14**
15:15 - 15:29	5	5	6	11	0	0	0	0	0	0	0	0	0	0	0	**27**
15:30 - 15:44	0	0	0	5	1	1	0	0	0	0	0	0	1	0	0	**8**
15:45 - 15:59	0	0	0	2	1	0	0	0	0	0	0	0	0	0	0	**3**
16:00 - 16:14	0	0	1	6	0	0	0	0	0	0	0	0	0	0	0	**7**
16:15 - 16:29	0	0	0	3	5	0	0	0	0	0	0	0	0	0	0	**8**
16:30 - 16:44	0	0	0	1	3	0	0	0	0	0	0	0	0	0	0	**4**
16:45 - 16:59	0	0	0	5	2	0	0	0	0	0	0	0	0	0	0	**7**
17:00 - 17:14	0	0	0	4	3	0	0	0	0	0	0	0	0	0	0	**7**
17:15 - 17:29	0	0	2	4	1	1	0	0	0	0	0	0	0	0	0	**8**
17:30 - 17:44	0	1	2	2	3	0	0	0	0	0	0	0	0	0	0	**8**
17:45 - 17:59	0	0	0	2	3	0	0	0	0	0	0	0	0	0	0	**5**
18:00 - 18:14	0	0	0	0	2	0	0	0	0	0	0	0	0	0	0	**2**
18:15 - 18:29	0	0	0	1	2	0	0	0	0	0	0	0	0	0	0	**3**
18:30 - 18:44	0	0	0	0	0	0	0	0	0	0	0	0	0	0	0	**0**
18:45 - 18:59	0	0	0	3	0	0	0	0	0	0	0	0	0	0	0	**3**
19:00 - 19:14	0	0	0	1	1	0	0	0	0	0	0	0	0	0	0	**2**
19:15 - 19:29	0	0	1	1	0	1	0	0	0	0	0	0	0	0	0	**3**
19:30 - 19:44	0	0	1	3	0	0	0	0	0	0	0	0	0	0	0	**4**
19:45 - 19:59	0	0	0	1	1	0	0	0	0	0	0	0	0	0	0	**2**
20:00 - 20:14	0	0	0	0	0	0	0	0	0	0	0	0	0	0	0	**0**
20:15 - 20:29	0	0	0	0	0	0	0	0	0	0	0	0	0	0	0	**0**
20:30 - 20:44	0	0	0	0	0	0	0	0	0	0	0	0	0	0	0	**0**
20:45 - 20:59	0	0	0	0	1	0	0	0	0	0	0	0	0	0	0	**1**
21:00 - 21:14	0	0	0	1	1	0	0	0	0	0	0	0	0	0	0	**2**
21:15 - 21:29	0	0	0	0	0	0	0	0	0	0	0	0	0	0	0	**0**
21:30 - 21:44	0	0	0	0	0	0	0	0	0	0	0	0	0	0	0	**0**
21:45 - 21:59	0	0	0	0	0	0	0	0	0	0	0	0	0	0	0	**0**
22:00 - 22:14	0	0	0	0	0	0	0	0	0	0	0	0	0	0	0	**0**
22:15 - 22:29	0	0	0	0	0	0	0	0	0	0	0	0	0	0	0	**0**
22:30 - 22:44	0	0	0	1	0	0	0	0	0	0	0	0	0	0	0	**1**
22:45 - 22:59	0	0	0	0	0	0	0	0	0	0	0	0	0	0	0	**0**
23:00 - 23:14	0	0	0	0	0	0	0	0	0	0	0	0	0	0	0	**0**
23:15 - 23:29	0	0	0	0	0	0	0	0	0	0	0	0	0	0	0	**0**
23:30 - 23:44	0	0	0	0	0	0	0	0	0	0	0	0	0	0	0	**0**
23:45 - 23:59	0	0	0	0	0	0	0	0	0	0	0	0	0	0	0	**0**
Totals	**32**	**54**	**143**	**198**	**93**	**5**	**0**	**1**	**0**	**0**	**0**	**0**	**1**	**0**	**0**	**527**
Percent of Total	**6.1**	**10.2**	**27.1**	**37.6**	**17.6**	**0.9**	**0.0**	**0.2**	**0.0**	**0.0**	**0.0**	**0.0**	**0.2**	**0.0**	**0.0**	**100**
Percent of AM	**6.5**	**11.1**	**30.4**	**34.3**	**17.0**	**0.7**	**0.0**	**0.0**	**0.0**	**0.0**	**0.0**	**0.0**	**0.0**	**0.0**	**0.0**	**100**
Percent of PM	**5.4**	**9.0**	**22.6**	**42.1**	**18.6**	**1.4**	**0.0**	**0.5**	**0.0**	**0.0**	**0.0**	**0.0**	**0.5**	**0.0**	**0.0**	**100**

Daily Eastbound Speeds (MPH)

Study Date: Tuesday, 10/02/2018
Unit ID: 0192
Location: SW 60TH ST / E OF SW 69TH CT

Standard Deviation:	6.2 MPH	Ten Mile Pace:	10 to 19 MPH	85th Percentile:	21.3 MPH
Mean Speed:	15.8 MPH	Percent in Ten Mile Pace:	64.7%	15th Percentile:	10.2 MPH
Median Speed:	16.0 MPH			90th Percentile:	23.0 MPH
Modal Speed:	18.0 MPH			95th Percentile:	24.7 MPH

Daily Eastbound Speeds (MPH)

Study Date: Wednesday, 10/03/2018
Unit ID: 0192
Location: SW 60TH ST / E OF SW 69TH CT

	0-5	5-10	10-15	15-20	20-25	25-30	30-35	35-40	40-45	45-50	50-55	55-60	60-65	65-70	70-75	Total
00:00 - 00:14	0	0	0	0	0	0	0	0	0	0	0	0	0	0	0	**0**
00:15 - 00:29	0	0	0	0	0	0	0	0	0	0	0	0	0	0	0	**0**
00:30 - 00:44	0	0	0	0	0	0	0	0	0	0	0	0	0	0	0	**0**
00:45 - 00:59	0	0	0	0	0	0	0	0	0	0	0	0	0	0	0	**0**
01:00 - 01:14	0	0	0	0	0	0	0	0	0	0	0	0	0	0	0	**0**
01:15 - 01:29	0	0	0	0	0	0	0	0	0	0	0	0	0	0	0	**0**
01:30 - 01:44	0	0	0	0	0	0	0	0	0	0	0	0	0	0	0	**0**
01:45 - 01:59	0	0	0	0	0	0	0	0	0	0	0	0	0	0	0	**0**
02:00 - 02:14	0	0	0	0	0	0	0	0	0	0	0	0	0	0	0	**0**
02:15 - 02:29	0	0	0	1	0	0	0	0	0	0	0	0	0	0	0	**1**
02:30 - 02:44	0	0	0	0	0	0	0	0	0	0	0	0	0	0	0	**0**
02:45 - 02:59	0	0	0	0	0	0	0	0	0	0	0	0	0	0	0	**0**
03:00 - 03:14	0	0	0	0	0	0	0	0	0	0	0	0	0	0	0	**0**
03:15 - 03:29	0	0	0	0	0	0	0	0	0	0	0	0	0	0	0	**0**
03:30 - 03:44	0	0	0	0	0	0	0	0	0	0	0	0	0	0	0	**0**
03:45 - 03:59	0	0	0	0	0	0	0	0	0	0	0	0	0	0	0	**0**
04:00 - 04:14	0	0	0	0	0	0	0	0	0	0	0	0	0	0	0	**0**
04:15 - 04:29	0	0	0	0	0	0	0	0	0	0	0	0	0	0	0	**0**
04:30 - 04:44	0	0	0	0	0	0	0	0	0	0	0	0	0	0	0	**0**
04:45 - 04:59	0	0	0	0	0	0	0	0	0	0	0	0	0	0	0	**0**
05:00 - 05:14	0	0	0	0	0	0	0	0	0	0	0	0	0	0	0	**0**
05:15 - 05:29	0	0	0	0	0	0	0	0	0	0	0	0	0	0	0	**0**
05:30 - 05:44	0	0	0	1	0	0	0	0	0	0	0	0	0	0	0	**1**
05:45 - 05:59	0	0	0	0	1	0	0	0	0	0	0	0	0	0	0	**1**
06:00 - 06:14	0	1	0	1	0	0	0	0	0	0	0	0	0	0	0	**2**
06:15 - 06:29	0	0	0	1	0	0	0	0	0	0	0	0	0	0	0	**1**
06:30 - 06:44	0	1	0	2	3	0	0	0	0	0	0	0	0	0	0	**6**
06:45 - 06:59	0	0	0	6	4	0	0	0	0	0	0	0	0	0	0	**10**
07:00 - 07:14	0	0	4	12	8	1	0	0	0	0	0	0	0	0	0	**25**
07:15 - 07:29	0	2	9	19	7	0	0	0	0	0	0	0	0	0	0	**37**
07:30 - 07:44	0	1	25	21	3	0	0	1	0	0	0	0	0	0	0	**51**
07:45 - 07:59	3	4	13	7	1	0	0	0	0	0	0	0	0	0	0	**28**
08:00 - 08:14	6	10	3	0	0	0	0	0	0	0	0	0	0	0	0	**19**
08:15 - 08:29	4	8	12	9	1	0	0	0	0	0	0	0	0	0	0	**34**
08:30 - 08:44	0	1	1	5	6	1	0	0	0	0	0	0	0	0	0	**14**
08:45 - 08:59	0	0	3	7	5	0	0	0	0	0	0	0	0	0	0	**15**
09:00 - 09:14	0	0	1	2	1	0	0	0	0	0	0	0	0	0	0	**4**
09:15 - 09:29	0	0	0	1	4	2	0	0	0	0	0	0	0	0	0	**7**
09:30 - 09:44	0	0	0	0	6	0	0	0	0	0	0	0	0	0	0	**6**
09:45 - 09:59	0	1	2	4	5	0	0	0	0	0	0	0	0	0	0	**12**
10:00 - 10:14	0	0	0	2	6	1	0	0	0	0	0	0	0	0	0	**9**
10:15 - 10:29	0	0	1	8	8	1	0	0	0	0	0	0	0	0	0	**18**
10:30 - 10:44	0	0	1	0	1	1	0	0	0	0	0	0	0	0	0	**3**
10:45 - 10:59	0	0	1	1	1	0	0	0	0	0	0	0	0	0	0	**3**
11:00 - 11:14	0	0	0	0	0	0	0	0	0	0	0	0	0	0	0	**0**
11:15 - 11:29	0	0	2	2	3	0	0	0	0	0	0	0	0	0	0	**7**
11:30 - 11:44	0	0	1	3	1	0	0	0	0	0	0	0	0	0	0	**5**
11:45 - 11:59	0	0	0	4	2	0	0	0	0	0	0	0	0	0	0	**6**
12:00 - 12:14	0	0	0	1	2	0	0	0	0	0	0	0	0	0	0	**3**
12:15 - 12:29	0	0	0	1	1	0	0	0	0	0	0	0	0	0	0	**2**
12:30 - 12:44	0	0	0	2	1	0	0	0	0	0	0	0	0	0	0	**3**

Daily Eastbound Speeds (MPH)

Study Date: Wednesday, 10/03/2018
Unit ID: 0192
Location: SW 60TH ST / E OF SW 69TH CT

	0-5	5-10	10-15	15-20	20-25	25-30	30-35	35-40	40-45	45-50	50-55	55-60	60-65	65-70	70-75	Total
12:45 - 12:59	0	2	6	6	0	0	0	0	0	0	0	0	0	0	0	**14**
13:00 - 13:14	0	1	4	7	2	0	0	0	0	0	0	0	0	0	0	**14**
13:15 - 13:29	0	1	8	6	3	1	0	0	0	0	0	0	0	0	0	**19**
13:30 - 13:44	0	3	7	5	0	0	0	0	0	0	0	0	0	0	0	**15**
13:45 - 13:59	3	4	2	0	0	0	0	0	0	0	0	0	0	0	0	**9**
14:00 - 14:14	3	2	4	7	1	0	0	0	0	0	0	0	0	0	0	**17**
14:15 - 14:29	0	0	3	4	1	0	0	0	0	0	0	0	0	0	0	**8**
14:30 - 14:44	0	0	1	2	1	0	0	0	0	0	0	0	0	0	0	**4**
14:45 - 14:59	0	0	3	9	5	0	0	0	0	0	0	0	0	0	0	**17**
15:00 - 15:14	1	2	11	6	2	0	0	0	0	0	0	0	0	0	0	**22**
15:15 - 15:29	0	0	2	6	4	0	0	0	0	0	0	0	0	0	0	**12**
15:30 - 15:44	0	0	4	1	4	0	0	0	0	0	0	0	0	0	0	**9**
15:45 - 15:59	0	0	1	3	2	0	0	0	0	0	0	0	0	0	0	**6**
16:00 - 16:14	0	0	0	2	2	0	0	0	0	0	0	0	0	0	0	**4**
16:15 - 16:29	0	1	2	2	1	0	0	0	0	0	0	0	0	0	0	**6**
16:30 - 16:44	0	0	0	1	3	0	0	0	0	0	0	0	0	0	0	**4**
16:45 - 16:59	0	1	4	0	7	1	0	0	0	0	0	0	0	0	0	**13**
17:00 - 17:14	0	0	2	4	2	0	0	0	0	0	0	0	0	0	0	**8**
17:15 - 17:29	1	0	1	5	2	1	0	0	0	0	0	0	0	0	0	**10**
17:30 - 17:44	0	0	1	4	3	0	0	0	0	0	0	0	0	0	0	**8**
17:45 - 17:59	0	0	0	2	3	0	0	0	0	0	0	0	0	0	0	**5**
18:00 - 18:14	0	0	0	0	0	0	0	0	0	0	0	0	0	0	0	**0**
18:15 - 18:29	0	0	1	2	1	0	0	0	0	0	0	0	0	0	0	**4**
18:30 - 18:44	0	0	1	1	1	1	0	0	0	0	0	0	0	0	0	**4**
18:45 - 18:59	0	0	0	1	0	0	0	0	0	0	0	0	0	0	0	**1**
19:00 - 19:14	0	0	0	4	1	0	0	0	0	0	0	0	0	0	0	**5**
19:15 - 19:29	0	0	0	1	0	0	0	0	0	0	0	0	0	0	0	**1**
19:30 - 19:44	0	0	0	1	0	0	0	0	0	0	0	0	0	0	0	**1**
19:45 - 19:59	0	0	0	0	0	0	0	0	0	0	0	0	0	0	0	**0**
20:00 - 20:14	0	0	0	1	0	0	0	0	0	0	0	0	0	0	0	**1**
20:15 - 20:29	0	0	0	0	1	0	0	0	0	0	0	0	0	0	0	**1**
20:30 - 20:44	0	0	0	0	1	0	0	0	0	0	0	0	0	0	0	**1**
20:45 - 20:59	0	0	0	1	0	0	0	0	0	0	0	0	0	0	0	**1**
21:00 - 21:14	0	0	0	0	0	0	0	0	0	0	0	0	0	0	0	**0**
21:15 - 21:29	0	0	0	0	1	0	0	0	0	0	0	0	0	0	0	**1**
21:30 - 21:44	0	0	0	0	0	0	0	0	0	0	0	0	0	0	0	**0**
21:45 - 21:59	0	0	0	0	0	0	0	0	0	0	0	0	0	0	0	**0**
22:00 - 22:14	0	0	1	0	0	0	0	0	0	0	0	0	0	0	0	**1**
22:15 - 22:29	0	0	2	0	0	0	0	0	0	0	0	0	0	0	0	**2**
22:30 - 22:44	0	0	0	0	0	0	0	0	0	0	0	0	0	0	0	**0**
22:45 - 22:59	0	0	0	0	0	0	0	0	0	0	0	0	0	0	0	**0**
23:00 - 23:14	0	0	0	0	0	0	0	0	0	0	0	0	0	0	0	**0**
23:15 - 23:29	0	0	0	1	0	0	0	0	0	0	0	0	0	0	0	**1**
23:30 - 23:44	0	0	0	0	0	0	0	0	0	0	0	0	0	0	0	**0**
23:45 - 23:59	0	0	0	0	1	0	0	0	0	0	0	0	0	0	0	**1**
Totals	**21**	**46**	**150**	**218**	**136**	**11**	**0**	**1**	**0**	**0**	**0**	**0**	**0**	**0**	**0**	**583**
Percent of Total	**3.6**	**7.9**	**25.7**	**37.4**	**23.3**	**1.9**	**0.0**	**0.2**	**0.0**	**0.0**	**0.0**	**0.0**	**0.0**	**0.0**	**0.0**	**100**
Percent of AM	**4.0**	**8.9**	**24.3**	**36.6**	**23.7**	**2.2**	**0.0**	**0.3**	**0.0**	**0.0**	**0.0**	**0.0**	**0.0**	**0.0**	**0.0**	**100**
Percent of PM	**3.1**	**6.6**	**27.5**	**38.4**	**22.9**	**1.6**	**0.0**	**0.0**	**0.0**	**0.0**	**0.0**	**0.0**	**0.0**	**0.0**	**0.0**	**100**

Daily Eastbound Speeds (MPH)

Study Date: Wednesday, 10/03/2018
Unit ID: 0192
Location: SW 60TH ST / E OF SW 69TH CT

Standard Deviation:	5.7 MPH	Ten Mile Pace:	10 to 19 MPH	85th Percentile:	22.6 MPH
Mean Speed:	16.8 MPH	Percent in Ten Mile Pace:	63.1%		
Median Speed:	17.0 MPH			15th Percentile:	10.8 MPH
Modal Speed:	18.0 MPH			90th Percentile:	23.9 MPH
				95th Percentile:	25.2 MPH

Daily Eastbound Speeds (MPH)

Study Date: Thursday, 10/04/2018
Unit ID: 0192
Location: SW 60TH ST / E OF SW 69TH CT

	0-5	5-10	10-15	15-20	20-25	25-30	30-35	35-40	40-45	45-50	50-55	55-60	60-65	65-70	70-75	Total
00:00 - 00:14	0	0	0	0	0	0	0	0	0	0	0	0	0	0	0	**0**
00:15 - 00:29	0	0	0	0	0	0	0	0	0	0	0	0	0	0	0	**0**
00:30 - 00:44	0	0	0	0	0	0	0	0	0	0	0	0	0	0	0	**0**
00:45 - 00:59	0	0	0	0	0	0	0	0	0	0	0	0	0	0	0	**0**
01:00 - 01:14	0	0	0	0	0	0	0	0	0	0	0	0	0	0	0	**0**
01:15 - 01:29	0	0	0	0	0	0	0	0	0	0	0	0	0	0	0	**0**
01:30 - 01:44	0	0	0	0	0	0	0	0	0	0	0	0	0	0	0	**0**
01:45 - 01:59	0	0	0	0	0	0	0	0	0	0	0	0	0	0	0	**0**
02:00 - 02:14	0	0	0	0	0	0	0	0	0	0	0	0	0	0	0	**0**
02:15 - 02:29	0	0	0	0	0	0	0	0	0	0	0	0	0	0	0	**0**
02:30 - 02:44	0	0	0	0	0	0	0	0	0	0	0	0	0	0	0	**0**
02:45 - 02:59	0	0	0	0	0	0	0	0	0	0	0	0	0	0	0	**0**
03:00 - 03:14	0	0	0	0	0	0	0	0	0	0	0	0	0	0	0	**0**
03:15 - 03:29	0	0	0	0	0	0	0	0	0	0	0	0	0	0	0	**0**
03:30 - 03:44	0	0	0	0	0	0	0	0	0	0	0	0	0	0	0	**0**
03:45 - 03:59	0	0	0	0	0	0	0	0	0	0	0	0	0	0	0	**0**
04:00 - 04:14	0	0	0	0	0	0	0	0	0	0	0	0	0	0	0	**0**
04:15 - 04:29	0	0	0	0	0	0	0	0	0	0	0	0	0	0	0	**0**
04:30 - 04:44	0	0	0	0	0	0	0	0	0	0	0	0	0	0	0	**0**
04:45 - 04:59	0	0	0	0	0	0	0	0	0	0	0	0	0	0	0	**0**
05:00 - 05:14	0	0	0	0	0	0	0	0	0	0	0	0	0	0	0	**0**
05:15 - 05:29	0	0	1	0	0	0	0	0	0	0	0	0	0	0	0	**1**
05:30 - 05:44	0	0	0	1	0	0	0	0	0	0	0	0	0	0	0	**1**
05:45 - 05:59	0	0	0	0	0	0	0	0	0	0	0	0	0	0	0	**0**
06:00 - 06:14	0	0	0	0	0	0	0	0	0	0	0	0	0	0	0	**0**
06:15 - 06:29	0	0	1	2	1	0	0	0	0	0	0	0	0	0	0	**4**
06:30 - 06:44	0	0	0	1	0	0	0	0	0	0	0	0	0	0	0	**1**
06:45 - 06:59	0	0	1	5	3	1	0	0	0	0	0	0	0	0	0	**10**
07:00 - 07:14	0	0	1	10	6	0	0	0	0	0	0	0	0	0	0	**17**
07:15 - 07:29	0	0	13	27	3	1	0	0	0	0	0	0	0	0	0	**44**
07:30 - 07:44	1	0	22	14	7	0	0	0	0	0	0	0	0	0	0	**44**
07:45 - 07:59	1	10	17	3	1	0	0	0	0	0	0	0	0	0	0	**32**
08:00 - 08:14	2	13	15	11	1	0	0	0	0	0	0	0	0	0	0	**42**
08:15 - 08:29	0	1	35	20	5	0	0	0	0	0	0	0	0	0	0	**61**
08:30 - 08:44	0	0	4	19	6	1	0	0	0	0	0	0	0	0	0	**30**
08:45 - 08:59	0	0	2	5	5	0	0	0	0	0	0	0	0	0	0	**12**
09:00 - 09:14	0	0	0	6	2	0	0	0	0	0	0	0	0	0	0	**8**
09:15 - 09:29	0	0	2	4	4	1	0	0	0	0	0	0	0	0	0	**11**
09:30 - 09:44	0	0	0	2	1	0	0	0	0	0	0	0	0	0	0	**3**
09:45 - 09:59	0	0	1	1	0	0	0	0	0	0	0	0	0	0	0	**2**
10:00 - 10:14	0	0	0	1	1	0	0	0	0	0	0	0	0	0	0	**2**
10:15 - 10:29	0	1	1	3	1	0	0	0	0	0	0	0	0	0	0	**6**
10:30 - 10:44	0	0	0	1	0	0	0	0	0	0	0	0	0	0	0	**1**
10:45 - 10:59	0	0	0	0	2	0	0	0	0	0	0	0	0	0	0	**2**
11:00 - 11:14	0	0	0	3	0	0	0	0	0	0	0	0	0	0	0	**3**
11:15 - 11:29	0	0	0	2	2	0	0	0	0	0	0	0	0	0	0	**4**
11:30 - 11:44	0	0	0	0	1	0	0	0	0	0	0	0	0	0	0	**1**
11:45 - 11:59	0	0	1	2	2	0	0	0	0	0	0	0	0	0	0	**5**
12:00 - 12:14	0	0	0	1	0	0	0	0	0	0	0	0	0	0	0	**1**
12:15 - 12:29	0	0	2	3	1	1	0	0	0	0	0	0	0	0	0	**7**
12:30 - 12:44	0	0	0	0	1	0	0	0	0	0	0	0	0	0	0	**1**

Daily Eastbound Speeds (MPH)

Study Date: Thursday, 10/04/2018
Unit ID: 0192
Location: SW 60TH ST / E OF SW 69TH CT

	0-5	5-10	10-15	15-20	20-25	25-30	30-35	35-40	40-45	45-50	50-55	55-60	60-65	65-70	70-75	Total
12:45 - 12:59	0	0	2	1	3	0	0	0	0	0	0	0	0	0	0	**6**
13:00 - 13:14	0	0	1	8	1	1	0	0	0	0	0	0	0	0	0	**11**
13:15 - 13:29	0	0	0	3	2	0	0	0	0	0	0	0	0	0	0	**5**
13:30 - 13:44	0	0	4	4	0	0	0	0	0	0	0	0	0	0	0	**8**
13:45 - 13:59	0	1	0	6	4	1	0	0	0	0	0	0	0	0	0	**12**
14:00 - 14:14	0	1	4	6	2	0	0	0	0	0	0	0	0	0	0	**13**
14:15 - 14:29	0	0	9	9	2	0	0	0	0	0	0	0	0	0	0	**20**
14:30 - 14:44	0	2	4	4	0	0	0	0	0	0	0	0	0	0	0	**10**
14:45 - 14:59	0	1	2	1	0	0	0	0	0	0	0	0	0	0	0	**4**
15:00 - 15:14	2	2	2	0	0	0	0	0	0	0	0	0	0	0	0	**6**
15:15 - 15:29	6	1	6	8	0	0	0	0	0	0	0	0	0	0	0	**21**
15:30 - 15:44	0	0	1	5	1	0	0	0	0	0	0	0	0	0	0	**7**
15:45 - 15:59	0	0	2	2	1	0	0	0	0	0	0	0	0	0	0	**5**
16:00 - 16:14	0	1	0	3	6	0	0	0	0	0	0	0	0	0	0	**10**
16:15 - 16:29	0	1	0	4	0	2	0	0	0	0	0	0	0	0	0	**7**
16:30 - 16:44	0	0	3	9	2	2	0	0	0	0	0	0	0	0	0	**16**
16:45 - 16:59	0	0	0	4	0	0	0	0	0	0	0	0	0	0	0	**4**
17:00 - 17:14	0	0	0	3	0	0	0	0	0	0	0	0	0	0	0	**3**
17:15 - 17:29	0	0	0	3	2	0	0	0	0	0	0	0	0	0	0	**5**
17:30 - 17:44	0	0	0	5	2	0	0	0	0	0	0	0	0	0	0	**7**
17:45 - 17:59	0	0	2	3	1	0	0	0	0	0	0	0	0	0	0	**6**
18:00 - 18:14	0	0	1	1	2	2	0	0	0	0	0	0	0	0	0	**6**
18:15 - 18:29	0	0	1	0	1	0	0	0	0	0	0	0	0	0	0	**2**
18:30 - 18:44	0	0	1	1	6	0	0	0	0	0	0	0	0	0	0	**8**
18:45 - 18:59	0	0	3	4	0	0	0	0	0	0	0	0	0	0	0	**7**
19:00 - 19:14	0	0	0	3	3	1	0	0	0	0	0	0	0	0	0	**7**
19:15 - 19:29	0	0	1	0	0	0	0	0	0	0	0	0	0	0	0	**1**
19:30 - 19:44	0	0	0	0	0	0	1	0	0	0	0	0	0	0	0	**1**
19:45 - 19:59	0	0	3	0	0	0	0	0	0	0	0	0	0	0	0	**3**
20:00 - 20:14	0	0	0	3	0	0	0	0	0	0	0	0	0	0	0	**3**
20:15 - 20:29	0	0	0	3	1	0	0	0	0	0	0	0	0	0	0	**4**
20:30 - 20:44	0	0	1	1	0	0	0	0	0	0	0	0	0	0	0	**2**
20:45 - 20:59	0	0	0	0	0	0	0	0	0	0	0	0	0	0	0	**0**
21:00 - 21:14	0	0	0	0	0	0	0	0	0	0	0	0	0	0	0	**0**
21:15 - 21:29	0	0	0	0	0	0	0	0	0	0	0	0	0	0	0	**0**
21:30 - 21:44	0	0	0	1	0	0	0	0	0	0	0	0	0	0	0	**1**
21:45 - 21:59	0	0	0	1	0	0	0	0	0	0	0	0	0	0	0	**1**
22:00 - 22:14	0	0	0	0	0	0	0	0	0	0	0	0	0	0	0	**0**
22:15 - 22:29	0	0	0	0	0	0	0	0	0	0	0	0	0	0	0	**0**
22:30 - 22:44	0	0	0	0	0	0	0	0	0	0	0	0	0	0	0	**0**
22:45 - 22:59	0	0	0	0	0	0	0	0	0	0	0	0	0	0	0	**0**
23:00 - 23:14	0	0	0	0	0	0	0	0	0	0	0	0	0	0	0	**0**
23:15 - 23:29	0	1	0	0	0	0	0	0	0	0	0	0	0	0	0	**1**
23:30 - 23:44	0	0	0	0	1	0	0	0	0	0	0	0	0	0	0	**1**
23:45 - 23:59	0	0	0	0	0	0	0	0	0	0	0	0	0	0	0	**0**
Totals	**12**	**36**	**172**	**256**	**99**	**14**	**1**	**0**	**0**	**0**	**0**	**0**	**0**	**0**	**0**	**590**
Percent of Total	**2.0**	**6.1**	**29.2**	**43.4**	**16.8**	**2.4**	**0.2**	**0.0**	**0.0**	**0.0**	**0.0**	**0.0**	**0.0**	**0.0**	**0.0**	**100**
Percent of AM	**1.2**	**7.2**	**33.7**	**41.2**	**15.6**	**1.2**	**0.0**	**0.0**	**0.0**	**0.0**	**0.0**	**0.0**	**0.0**	**0.0**	**0.0**	**100**
Percent of PM	**3.3**	**4.5**	**22.6**	**46.5**	**18.5**	**4.1**	**0.4**	**0.0**	**0.0**	**0.0**	**0.0**	**0.0**	**0.0**	**0.0**	**0.0**	**100**

Daily Eastbound Speeds (MPH)

Study Date: Thursday, 10/04/2018
Unit ID: 0192
Location: SW 60TH ST / E OF SW 69TH CT

Standard Deviation:	5.1 MPH	Ten Mile Pace:	10 to 19 MPH	85th Percentile:	21.5 MPH
Mean Speed:	16.7 MPH	Percent in Ten Mile Pace:	72.5%	15th Percentile:	11.4 MPH
Median Speed:	16.7 MPH			90th Percentile:	23.3 MPH
Modal Speed:	18.0 MPH			95th Percentile:	25.1 MPH

Daily Westbound Speeds (MPH)

Study Date: Tuesday, 10/02/2018
Unit ID: 0192
Location: SW 60TH ST / E OF SW 69TH CT

	0-5	5-10	10-15	15-20	20-25	25-30	30-35	35-40	40-45	45-50	50-55	55-60	60-65	65-70	70-75	Total
00:00 - 00:14	0	0	0	0	0	0	0	0	0	0	0	0	0	0	0	**0**
00:15 - 00:29	0	0	0	0	0	0	0	0	0	0	0	0	0	0	0	**0**
00:30 - 00:44	0	0	0	0	0	0	0	0	0	0	0	0	0	0	0	**0**
00:45 - 00:59	0	0	0	0	0	0	0	0	0	0	0	0	0	0	0	**0**
01:00 - 01:14	0	0	0	0	0	0	0	0	0	0	0	0	0	0	0	**0**
01:15 - 01:29	0	0	0	0	0	0	0	0	0	0	0	0	0	0	0	**0**
01:30 - 01:44	0	0	0	0	0	0	0	0	0	0	0	0	0	0	0	**0**
01:45 - 01:59	0	0	0	0	0	0	0	0	0	0	0	0	0	0	0	**0**
02:00 - 02:14	0	0	0	0	0	0	0	0	0	0	0	0	0	0	0	**0**
02:15 - 02:29	0	0	0	0	0	0	0	0	0	0	0	0	0	0	0	**0**
02:30 - 02:44	0	0	0	0	0	0	0	0	0	0	0	0	0	0	0	**0**
02:45 - 02:59	0	0	0	0	0	0	0	0	0	0	0	0	0	0	0	**0**
03:00 - 03:14	0	0	0	0	0	0	0	0	0	0	0	0	0	0	0	**0**
03:15 - 03:29	0	0	0	0	0	0	0	0	0	0	0	0	0	0	0	**0**
03:30 - 03:44	0	0	0	0	0	0	0	0	0	0	0	0	0	0	0	**0**
03:45 - 03:59	0	0	0	0	0	0	0	0	0	0	0	0	0	0	0	**0**
04:00 - 04:14	0	0	0	0	0	0	0	0	0	0	0	0	0	0	0	**0**
04:15 - 04:29	0	0	0	0	0	0	0	0	0	0	0	0	0	0	0	**0**
04:30 - 04:44	0	0	0	0	0	0	0	0	0	0	0	0	0	0	0	**0**
04:45 - 04:59	0	0	0	0	0	0	0	0	0	0	0	0	0	0	0	**0**
05:00 - 05:14	0	0	0	0	0	0	0	0	0	0	0	0	0	0	0	**0**
05:15 - 05:29	0	0	0	0	0	0	0	0	0	0	0	0	0	0	0	**0**
05:30 - 05:44	0	0	0	0	0	0	0	0	0	0	0	0	0	0	0	**0**
05:45 - 05:59	0	0	0	0	0	0	0	0	0	0	0	0	0	0	0	**0**
06:00 - 06:14	0	0	0	0	0	0	0	0	0	0	0	0	0	0	0	**0**
06:15 - 06:29	0	0	0	0	0	0	0	0	0	0	0	0	0	0	0	**0**
06:30 - 06:44	0	0	1	3	1	0	0	0	0	0	0	0	0	0	0	**5**
06:45 - 06:59	0	0	1	0	0	0	0	0	0	0	0	0	0	0	0	**1**
07:00 - 07:14	0	0	0	4	1	0	0	0	0	0	0	0	0	0	0	**5**
07:15 - 07:29	0	1	3	3	1	0	0	0	0	0	0	0	0	0	0	**8**
07:30 - 07:44	0	0	3	3	0	0	0	0	0	0	0	0	0	0	0	**6**
07:45 - 07:59	1	2	3	0	0	0	0	0	0	0	0	0	0	0	0	**6**
08:00 - 08:14	0	2	0	0	0	0	0	0	0	0	0	0	0	0	0	**2**
08:15 - 08:29	0	2	3	0	2	2	0	0	0	0	0	0	0	0	0	**9**
08:30 - 08:44	0	0	1	2	0	0	0	0	0	0	0	0	0	0	0	**3**
08:45 - 08:59	0	0	1	1	1	0	0	0	0	0	0	0	0	0	0	**3**
09:00 - 09:14	0	0	2	1	1	0	0	0	0	0	0	0	0	0	0	**4**
09:15 - 09:29	0	0	0	2	0	0	0	0	0	0	0	0	0	0	0	**2**
09:30 - 09:44	0	0	1	0	2	0	0	0	0	0	0	0	0	0	0	**3**
09:45 - 09:59	0	0	0	0	0	0	0	0	0	0	0	0	0	0	0	**0**
10:00 - 10:14	0	0	0	3	0	0	0	0	0	0	0	0	0	0	0	**3**
10:15 - 10:29	0	0	2	2	0	1	0	0	0	0	0	0	0	0	0	**5**
10:30 - 10:44	0	0	0	1	0	0	0	0	0	0	0	0	0	0	0	**1**
10:45 - 10:59	0	0	2	1	3	0	0	0	0	0	0	0	0	0	0	**6**
11:00 - 11:14	0	0	0	0	0	0	0	0	0	0	0	0	0	0	0	**0**
11:15 - 11:29	0	0	2	2	0	0	0	0	0	0	0	0	0	0	0	**4**
11:30 - 11:44	0	0	1	0	2	0	0	0	0	0	0	0	0	0	0	**3**
11:45 - 11:59	0	0	2	0	3	0	0	0	0	0	0	0	0	0	0	**5**
12:00 - 12:14	0	0	0	3	0	0	0	0	0	0	0	0	0	0	0	**3**
12:15 - 12:29	0	0	0	2	1	0	0	0	0	0	0	0	0	0	0	**3**
12:30 - 12:44	0	0	1	1	0	0	0	0	0	0	0	0	0	0	0	**2**

Daily Westbound Speeds (MPH)

Study Date: Tuesday, 10/02/2018
Unit ID: 0192
Location: SW 60TH ST / E OF SW 69TH CT

	0-5	5-10	10-15	15-20	20-25	25-30	30-35	35-40	40-45	45-50	50-55	55-60	60-65	65-70	70-75	Total
12:45 - 12:59	0	0	1	0	2	0	0	0	0	0	0	0	0	0	0	**3**
13:00 - 13:14	0	0	2	0	1	0	0	0	0	0	0	0	0	0	0	**3**
13:15 - 13:29	0	0	2	4	0	0	0	0	0	0	0	0	0	0	0	**6**
13:30 - 13:44	0	0	0	1	1	0	0	0	0	0	0	0	0	0	0	**2**
13:45 - 13:59	0	1	3	0	0	0	0	0	0	0	0	0	0	0	0	**4**
14:00 - 14:14	0	1	1	0	0	0	0	0	0	0	0	0	0	0	0	**2**
14:15 - 14:29	0	2	0	1	1	0	0	0	0	0	0	0	0	0	0	**4**
14:30 - 14:44	0	0	3	1	0	0	0	0	0	0	0	0	0	0	0	**4**
14:45 - 14:59	0	2	0	2	1	0	0	0	0	0	0	0	0	0	0	**5**
15:00 - 15:14	1	16	12	6	0	1	0	0	0	0	0	0	0	0	0	**36**
15:15 - 15:29	0	11	30	20	0	0	0	0	0	0	0	0	0	0	0	**61**
15:30 - 15:44	0	0	8	16	12	0	0	0	0	0	0	0	0	0	0	**36**
15:45 - 15:59	0	0	2	5	2	0	0	0	0	0	0	0	0	0	0	**9**
16:00 - 16:14	0	0	3	8	2	0	0	0	0	0	0	0	0	0	0	**13**
16:15 - 16:29	0	0	4	5	7	1	0	0	0	0	0	0	0	0	0	**17**
16:30 - 16:44	0	0	0	5	7	0	0	0	0	0	0	0	0	0	0	**12**
16:45 - 16:59	0	0	2	4	4	3	0	0	0	0	0	0	0	0	0	**13**
17:00 - 17:14	0	0	1	12	9	3	0	0	0	0	0	0	0	0	0	**25**
17:15 - 17:29	0	1	5	14	17	1	1	0	0	0	0	0	0	0	0	**39**
17:30 - 17:44	0	1	3	19	25	5	0	1	0	0	0	0	0	0	0	**54**
17:45 - 17:59	0	1	2	17	16	1	0	0	0	0	0	0	0	0	0	**37**
18:00 - 18:14	0	2	4	10	13	2	0	0	0	0	0	0	0	0	0	**31**
18:15 - 18:29	0	0	2	6	7	1	0	0	0	0	0	0	0	0	0	**16**
18:30 - 18:44	0	0	0	3	2	3	0	0	0	0	0	0	0	0	0	**8**
18:45 - 18:59	0	0	0	1	1	0	1	0	0	0	0	0	0	0	0	**3**
19:00 - 19:14	0	0	0	2	5	0	0	0	0	0	0	0	0	0	0	**7**
19:15 - 19:29	0	0	0	1	2	0	0	0	0	0	0	0	0	0	0	**3**
19:30 - 19:44	0	0	1	0	1	0	0	0	0	0	0	0	0	0	0	**2**
19:45 - 19:59	0	0	2	0	0	0	0	0	0	0	0	0	0	0	0	**2**
20:00 - 20:14	0	1	0	4	1	0	0	0	0	0	0	0	0	0	0	**6**
20:15 - 20:29	0	0	0	1	1	0	0	0	0	0	0	0	0	0	0	**2**
20:30 - 20:44	0	0	1	0	0	0	0	0	0	0	0	0	0	0	0	**1**
20:45 - 20:59	0	0	0	0	1	1	0	0	0	0	0	0	0	0	0	**2**
21:00 - 21:14	0	0	3	3	0	1	0	0	0	0	0	0	0	0	0	**7**
21:15 - 21:29	0	0	0	1	1	1	0	0	0	0	0	0	0	0	0	**3**
21:30 - 21:44	0	0	0	0	1	0	0	0	0	0	0	0	0	0	0	**1**
21:45 - 21:59	0	0	0	1	0	0	0	0	0	0	0	0	0	0	0	**1**
22:00 - 22:14	0	0	1	0	0	0	0	0	0	0	0	0	0	0	0	**1**
22:15 - 22:29	0	0	0	2	1	0	0	0	0	0	0	0	0	0	0	**3**
22:30 - 22:44	0	0	0	0	0	0	0	0	0	0	0	0	0	0	0	**0**
22:45 - 22:59	0	0	0	1	2	0	0	0	0	0	0	0	0	0	0	**3**
23:00 - 23:14	0	0	0	0	0	0	0	0	0	0	0	0	0	0	0	**0**
23:15 - 23:29	0	0	0	0	0	0	0	0	0	0	0	0	0	0	0	**0**
23:30 - 23:44	0	0	0	0	0	0	0	0	0	0	0	0	0	0	0	**0**
23:45 - 23:59	0	0	0	0	0	0	0	0	0	0	0	0	0	0	0	**0**
Totals	**2**	**46**	**127**	**210**	**164**	**27**	**2**	**1**	**0**	**0**	**0**	**0**	**0**	**0**	**0**	**579**
Percent of Total	**0.3**	**7.9**	**21.9**	**36.3**	**28.3**	**4.7**	**0.3**	**0.2**	**0.0**	**0.0**	**0.0**	**0.0**	**0.0**	**0.0**	**0.0**	**100**
Percent of AM	**1.2**	**8.3**	**33.3**	**33.3**	**20.2**	**3.6**	**0.0**	**0.0**	**0.0**	**0.0**	**0.0**	**0.0**	**0.0**	**0.0**	**0.0**	**100**
Percent of PM	**0.2**	**7.9**	**20.0**	**36.8**	**29.7**	**4.8**	**0.4**	**0.2**	**0.0**	**0.0**	**0.0**	**0.0**	**0.0**	**0.0**	**0.0**	**100**

Daily Westbound Speeds (MPH)

Study Date: Tuesday, 10/02/2018
Unit ID: 0192
Location: SW 60TH ST / E OF SW 69TH CT

Standard Deviation:	5.5 MPH	Ten Mile Pace:	15 to 24 MPH	85th Percentile:	23.9 MPH
Mean Speed:	18.0 MPH	Percent in Ten Mile Pace:	64.6%	15th Percentile:	11.8 MPH
Median Speed:	18.3 MPH			90th Percentile:	25.0 MPH
Modal Speed:	18.0 MPH			95th Percentile:	25.1 MPH

Daily Westbound Speeds (MPH)

Study Date: Wednesday, 10/03/2018
Unit ID: 0192
Location: SW 60TH ST / E OF SW 69TH CT

	0-5	5-10	10-15	15-20	20-25	25-30	30-35	35-40	40-45	45-50	50-55	55-60	60-65	65-70	70-75	Total
00:00 - 00:14	0	0	0	0	0	0	0	0	0	0	0	0	0	0	0	**0**
00:15 - 00:29	0	0	0	0	0	0	0	0	0	0	0	0	0	0	0	**0**
00:30 - 00:44	0	0	0	1	0	0	0	0	0	0	0	0	0	0	0	**1**
00:45 - 00:59	0	0	0	0	0	0	0	0	0	0	0	0	0	0	0	**0**
01:00 - 01:14	0	0	0	0	0	0	0	0	0	0	0	0	0	0	0	**0**
01:15 - 01:29	0	0	0	0	0	0	0	0	0	0	0	0	0	0	0	**0**
01:30 - 01:44	0	0	0	0	0	0	0	0	0	0	0	0	0	0	0	**0**
01:45 - 01:59	0	0	0	0	0	0	0	0	0	0	0	0	0	0	0	**0**
02:00 - 02:14	0	0	0	0	0	0	0	0	0	0	0	0	0	0	0	**0**
02:15 - 02:29	0	0	0	0	0	0	0	0	0	0	0	0	0	0	0	**0**
02:30 - 02:44	0	0	0	0	0	0	0	0	0	0	0	0	0	0	0	**0**
02:45 - 02:59	0	0	0	0	0	0	0	0	0	0	0	0	0	0	0	**0**
03:00 - 03:14	0	0	0	0	0	0	0	0	0	0	0	0	0	0	0	**0**
03:15 - 03:29	0	0	0	0	0	0	0	0	0	0	0	0	0	0	0	**0**
03:30 - 03:44	0	0	0	0	0	0	0	0	0	0	0	0	0	0	0	**0**
03:45 - 03:59	0	0	0	0	0	0	0	0	0	0	0	0	0	0	0	**0**
04:00 - 04:14	0	0	0	0	0	0	0	0	0	0	0	0	0	0	0	**0**
04:15 - 04:29	0	0	0	0	0	0	0	0	0	0	0	0	0	0	0	**0**
04:30 - 04:44	0	0	0	0	0	0	0	0	0	0	0	0	0	0	0	**0**
04:45 - 04:59	0	0	0	0	0	0	0	0	0	0	0	0	0	0	0	**0**
05:00 - 05:14	0	0	0	0	0	0	0	0	0	0	0	0	0	0	0	**0**
05:15 - 05:29	0	0	0	0	0	0	0	0	0	0	0	0	0	0	0	**0**
05:30 - 05:44	0	0	0	1	0	0	0	0	0	0	0	0	0	0	0	**1**
05:45 - 05:59	0	0	0	0	0	0	0	0	0	0	0	0	0	0	0	**0**
06:00 - 06:14	0	0	0	0	0	0	0	0	0	0	0	0	0	0	0	**0**
06:15 - 06:29	0	0	0	1	0	0	0	0	0	0	0	0	0	0	0	**1**
06:30 - 06:44	0	0	1	2	1	1	0	0	0	0	0	0	0	0	0	**5**
06:45 - 06:59	0	0	1	0	0	0	0	0	0	0	0	0	0	0	0	**1**
07:00 - 07:14	0	0	0	3	4	0	0	0	0	0	0	0	0	0	0	**7**
07:15 - 07:29	0	0	1	5	0	1	0	0	0	0	0	0	0	0	0	**7**
07:30 - 07:44	0	0	1	6	0	0	0	0	0	0	0	0	0	0	0	**7**
07:45 - 07:59	1	1	0	0	0	0	0	0	0	0	0	0	0	0	0	**2**
08:00 - 08:14	4	1	1	1	0	0	0	0	0	0	0	0	0	0	0	**7**
08:15 - 08:29	0	3	2	2	1	0	0	0	0	0	0	0	0	0	0	**8**
08:30 - 08:44	0	1	1	4	2	0	0	0	0	0	0	0	0	0	0	**8**
08:45 - 08:59	0	0	2	2	2	0	0	0	0	0	0	0	0	0	0	**6**
09:00 - 09:14	0	0	1	0	3	0	0	0	0	0	0	0	0	0	0	**4**
09:15 - 09:29	0	0	1	1	2	0	0	0	0	0	0	0	0	0	0	**4**
09:30 - 09:44	0	0	1	1	0	0	0	0	0	0	0	0	0	0	0	**2**
09:45 - 09:59	0	0	0	1	0	0	0	0	0	0	0	0	0	0	0	**1**
10:00 - 10:14	0	0	0	0	0	0	0	0	0	0	0	0	0	0	0	**0**
10:15 - 10:29	0	1	2	1	0	0	0	0	0	0	0	0	0	0	0	**4**
10:30 - 10:44	0	0	0	1	0	0	0	0	0	0	0	0	0	0	0	**1**
10:45 - 10:59	0	0	1	1	1	1	0	0	0	0	0	0	0	0	0	**4**
11:00 - 11:14	0	0	1	1	4	0	0	0	0	0	0	0	0	0	0	**6**
11:15 - 11:29	0	0	1	1	2	1	0	0	0	0	0	0	0	0	0	**5**
11:30 - 11:44	0	0	0	0	1	0	0	0	0	0	0	0	0	0	0	**1**
11:45 - 11:59	0	0	0	1	1	1	0	0	0	0	0	0	0	0	0	**3**
12:00 - 12:14	0	0	0	0	0	0	0	0	0	0	0	0	0	0	0	**0**
12:15 - 12:29	0	0	1	1	1	0	0	0	0	0	0	0	0	0	0	**3**
12:30 - 12:44	0	0	0	0	3	0	0	0	0	0	0	0	0	0	0	**3**

Daily Westbound Speeds (MPH)

Study Date: Wednesday, 10/03/2018
Unit ID: 0192
Location: SW 60TH ST / E OF SW 69TH CT

	0-5	5-10	10-15	15-20	20-25	25-30	30-35	35-40	40-45	45-50	50-55	55-60	60-65	65-70	70-75	Total
12:45 - 12:59	0	1	1	0	0	0	0	0	0	0	0	0	0	0	0	**2**
13:00 - 13:14	0	2	1	0	0	0	0	0	0	0	0	0	0	0	0	**3**
13:15 - 13:29	0	0	4	2	1	0	0	0	0	0	0	0	0	0	0	**7**
13:30 - 13:44	0	2	5	1	0	0	0	0	0	0	0	0	0	0	0	**8**
13:45 - 13:59	0	7	9	4	0	0	0	0	0	0	0	0	0	0	0	**20**
14:00 - 14:14	0	2	24	10	3	0	0	0	0	0	0	0	0	0	0	**39**
14:15 - 14:29	0	0	1	4	2	0	0	0	0	0	0	0	0	0	0	**7**
14:30 - 14:44	0	1	1	3	0	1	0	0	0	0	0	0	0	0	0	**6**
14:45 - 14:59	0	0	0	5	1	0	0	0	0	0	0	0	0	0	0	**6**
15:00 - 15:14	0	1	5	10	3	0	0	0	0	0	0	0	0	0	0	**19**
15:15 - 15:29	0	0	6	14	3	0	0	0	0	0	0	0	0	0	0	**23**
15:30 - 15:44	0	0	4	8	8	0	0	0	0	0	0	0	0	0	0	**20**
15:45 - 15:59	0	1	2	7	4	0	0	0	0	0	0	0	0	0	0	**14**
16:00 - 16:14	0	0	3	6	2	0	0	0	0	0	0	0	0	0	0	**11**
16:15 - 16:29	0	1	0	4	4	1	0	0	0	0	0	0	0	0	0	**10**
16:30 - 16:44	0	1	0	7	10	0	0	0	0	0	0	0	0	0	0	**18**
16:45 - 16:59	0	2	1	10	8	6	0	0	0	0	0	0	0	0	0	**27**
17:00 - 17:14	0	1	2	12	12	0	0	0	0	0	0	0	0	0	0	**27**
17:15 - 17:29	0	1	3	13	10	2	0	0	0	0	0	0	0	0	0	**29**
17:30 - 17:44	0	0	1	9	13	1	1	0	0	0	0	0	0	0	0	**25**
17:45 - 17:59	0	0	2	14	16	1	0	0	0	0	0	0	0	0	0	**33**
18:00 - 18:14	0	0	0	6	8	1	0	0	0	0	0	0	0	0	0	**15**
18:15 - 18:29	0	0	0	3	8	1	0	0	0	0	0	0	0	0	0	**12**
18:30 - 18:44	0	1	2	5	3	2	0	0	0	0	0	0	0	0	0	**13**
18:45 - 18:59	0	0	0	0	1	0	0	0	0	0	0	0	0	0	0	**1**
19:00 - 19:14	0	0	0	3	1	0	0	0	0	0	0	0	0	0	0	**4**
19:15 - 19:29	0	0	0	2	0	0	0	0	0	0	0	0	0	0	0	**2**
19:30 - 19:44	0	0	1	3	0	0	0	0	0	0	0	0	0	0	0	**4**
19:45 - 19:59	0	0	1	0	5	0	0	0	0	0	0	0	0	0	0	**6**
20:00 - 20:14	0	0	0	4	1	0	0	0	0	0	0	0	0	0	0	**5**
20:15 - 20:29	0	0	0	0	2	1	0	0	0	0	0	0	0	0	0	**3**
20:30 - 20:44	0	0	0	1	1	0	1	0	0	0	0	0	0	0	0	**3**
20:45 - 20:59	0	0	0	0	0	0	0	0	0	0	0	0	0	0	0	**0**
21:00 - 21:14	0	0	0	0	1	0	0	0	0	0	0	0	0	0	0	**1**
21:15 - 21:29	0	0	1	2	0	0	0	0	0	0	0	0	0	0	0	**3**
21:30 - 21:44	0	0	0	0	0	0	0	0	0	0	0	0	0	0	0	**0**
21:45 - 21:59	0	0	0	0	0	0	0	0	0	0	0	0	0	0	0	**0**
22:00 - 22:14	0	0	0	0	0	0	0	0	0	0	0	0	0	0	0	**0**
22:15 - 22:29	0	0	0	0	1	0	0	0	0	0	0	0	0	0	0	**1**
22:30 - 22:44	0	0	0	0	0	0	0	0	0	0	0	0	0	0	0	**0**
22:45 - 22:59	0	0	0	0	0	0	0	0	0	0	0	0	0	0	0	**0**
23:00 - 23:14	0	0	0	1	0	0	0	0	0	0	0	0	0	0	0	**1**
23:15 - 23:29	0	0	0	0	0	0	0	0	0	0	0	0	0	0	0	**0**
23:30 - 23:44	0	0	0	0	0	0	0	0	0	0	0	0	0	0	0	**0**
23:45 - 23:59	0	0	0	0	1	0	0	0	0	0	0	0	0	0	0	**1**
Totals	**5**	**31**	**99**	**211**	**161**	**22**	**2**	**0**	**0**	**0**	**0**	**0**	**0**	**0**	**0**	**531**
Percent of Total	**0.9**	**5.8**	**18.6**	**39.7**	**30.3**	**4.1**	**0.4**	**0.0**	**0.0**	**0.0**	**0.0**	**0.0**	**0.0**	**0.0**	**0.0**	**100**
Percent of AM	**5.2**	**7.3**	**18.8**	**38.5**	**25.0**	**5.2**	**0.0**	**0.0**	**0.0**	**0.0**	**0.0**	**0.0**	**0.0**	**0.0**	**0.0**	**100**
Percent of PM	**0.0**	**5.5**	**18.6**	**40.0**	**31.5**	**3.9**	**0.5**	**0.0**	**0.0**	**0.0**	**0.0**	**0.0**	**0.0**	**0.0**	**0.0**	**100**

Daily Westbound Speeds (MPH)

Study Date: Wednesday, 10/03/2018
Unit ID: 0192
Location: SW 60TH ST / E OF SW 69TH CT

Standard Deviation:	5.3 MPH	Ten Mile Pace:	15 to 24 MPH	85th Percentile:	23.9 MPH
Mean Speed:	18.3 MPH	Percent in Ten Mile Pace:	70.1%		
Median Speed:	18.7 MPH			15th Percentile:	12.6 MPH
Modal Speed:	18.0 MPH			90th Percentile:	24.9 MPH
				95th Percentile:	25.9 MPH

Daily Westbound Speeds (MPH)

Study Date: Thursday, 10/04/2018
Unit ID: 0192
Location: SW 60TH ST / E OF SW 69TH CT

	0-5	5-10	10-15	15-20	20-25	25-30	30-35	35-40	40-45	45-50	50-55	55-60	60-65	65-70	70-75	Total
00:00 - 00:14	0	0	0	0	0	0	0	0	0	0	0	0	0	0	0	**0**
00:15 - 00:29	0	0	0	0	0	0	0	0	0	0	0	0	0	0	0	**0**
00:30 - 00:44	0	0	0	0	0	0	0	0	0	0	0	0	0	0	0	**0**
00:45 - 00:59	0	0	0	0	2	0	0	0	0	0	0	0	0	0	0	**2**
01:00 - 01:14	0	0	0	0	0	0	0	0	0	0	0	0	0	0	0	**0**
01:15 - 01:29	0	0	0	0	0	0	0	0	0	0	0	0	0	0	0	**0**
01:30 - 01:44	0	0	0	0	0	0	0	0	0	0	0	0	0	0	0	**0**
01:45 - 01:59	0	0	0	0	0	0	0	0	0	0	0	0	0	0	0	**0**
02:00 - 02:14	0	0	0	1	0	0	0	0	0	0	0	0	0	0	0	**1**
02:15 - 02:29	0	0	0	0	0	0	0	0	0	0	0	0	0	0	0	**0**
02:30 - 02:44	0	0	0	0	0	0	0	0	0	0	0	0	0	0	0	**0**
02:45 - 02:59	0	0	0	0	0	0	0	0	0	0	0	0	0	0	0	**0**
03:00 - 03:14	0	0	0	0	0	0	0	0	0	0	0	0	0	0	0	**0**
03:15 - 03:29	0	0	0	0	0	0	0	0	0	0	0	0	0	0	0	**0**
03:30 - 03:44	0	0	0	0	0	0	0	0	0	0	0	0	0	0	0	**0**
03:45 - 03:59	0	0	0	0	0	0	0	0	0	0	0	0	0	0	0	**0**
04:00 - 04:14	0	0	0	0	0	0	0	0	0	0	0	0	0	0	0	**0**
04:15 - 04:29	0	0	0	0	0	0	0	0	0	0	0	0	0	0	0	**0**
04:30 - 04:44	0	0	0	0	0	0	0	0	0	0	0	0	0	0	0	**0**
04:45 - 04:59	0	0	0	0	0	0	0	0	0	0	0	0	0	0	0	**0**
05:00 - 05:14	0	0	0	0	0	0	0	0	0	0	0	0	0	0	0	**0**
05:15 - 05:29	0	0	0	0	0	0	0	0	0	0	0	0	0	0	0	**0**
05:30 - 05:44	0	0	0	1	0	0	0	0	0	0	0	0	0	0	0	**1**
05:45 - 05:59	0	0	0	0	0	0	0	0	0	0	0	0	0	0	0	**0**
06:00 - 06:14	0	0	0	0	0	0	0	0	0	0	0	0	0	0	0	**0**
06:15 - 06:29	0	0	1	0	1	0	0	0	0	0	0	0	0	0	0	**2**
06:30 - 06:44	0	0	1	2	0	0	0	0	0	0	0	0	0	0	0	**3**
06:45 - 06:59	0	0	2	0	0	0	0	0	0	0	0	0	0	0	0	**2**
07:00 - 07:14	0	0	0	7	1	1	0	0	0	0	0	0	0	0	0	**9**
07:15 - 07:29	0	0	4	5	0	0	0	0	0	0	0	0	0	0	0	**9**
07:30 - 07:44	0	0	1	3	0	0	0	0	0	0	0	0	0	0	0	**4**
07:45 - 07:59	0	1	1	2	0	0	0	0	0	0	0	0	0	0	0	**4**
08:00 - 08:14	0	0	0	0	0	0	0	0	0	0	0	1	0	0	0	**1**
08:15 - 08:29	0	0	3	1	0	0	0	0	0	0	0	0	0	0	0	**4**
08:30 - 08:44	0	0	1	2	0	0	0	0	0	0	0	0	0	0	0	**3**
08:45 - 08:59	0	1	1	2	1	0	0	0	0	0	0	0	0	0	0	**5**
09:00 - 09:14	0	0	4	0	0	0	0	0	0	0	0	0	0	0	0	**4**
09:15 - 09:29	0	0	1	1	0	0	0	0	0	0	0	0	0	0	0	**2**
09:30 - 09:44	0	0	2	2	0	0	0	0	0	0	0	0	0	0	0	**4**
09:45 - 09:59	0	2	0	2	0	0	0	0	0	0	0	0	0	0	0	**4**
10:00 - 10:14	0	0	1	2	0	0	0	0	0	0	0	0	0	0	0	**3**
10:15 - 10:29	0	0	1	1	2	0	0	0	0	0	0	0	0	0	0	**4**
10:30 - 10:44	0	0	1	0	3	1	0	0	0	0	0	0	0	0	0	**5**
10:45 - 10:59	0	0	0	0	0	0	0	0	0	0	0	0	0	0	0	**0**
11:00 - 11:14	0	0	2	3	0	0	0	0	0	0	0	0	0	0	0	**5**
11:15 - 11:29	0	0	0	0	0	0	0	0	0	0	0	0	0	0	0	**0**
11:30 - 11:44	0	0	0	1	0	0	0	0	0	0	0	0	0	0	0	**1**
11:45 - 11:59	0	1	0	1	0	0	0	0	0	0	0	0	0	0	0	**2**
12:00 - 12:14	0	0	0	1	0	0	0	0	0	0	0	0	0	0	0	**1**
12:15 - 12:29	0	0	1	0	3	0	0	0	0	0	0	0	0	0	0	**4**
12:30 - 12:44	0	0	0	1	2	0	0	0	0	0	0	0	0	0	0	**3**

Daily Westbound Speeds (MPH)

Study Date: Thursday, 10/04/2018
Unit ID: 0192
Location: SW 60TH ST / E OF SW 69TH CT

	0-5	5-10	10-15	15-20	20-25	25-30	30-35	35-40	40-45	45-50	50-55	55-60	60-65	65-70	70-75	Total
12:45 - 12:59	0	0	0	0	1	0	0	0	0	0	0	0	0	0	0	**1**
13:00 - 13:14	0	0	1	3	2	0	0	0	0	0	0	0	0	0	0	**6**
13:15 - 13:29	0	0	2	2	1	0	0	0	0	0	0	0	0	0	0	**5**
13:30 - 13:44	0	0	1	0	0	0	0	0	0	0	0	0	0	0	0	**1**
13:45 - 13:59	0	0	0	2	0	0	0	0	0	0	0	0	0	0	0	**2**
14:00 - 14:14	0	0	0	2	1	0	0	0	0	0	0	0	0	0	0	**3**
14:15 - 14:29	0	0	2	2	0	0	0	0	0	0	0	0	0	0	0	**4**
14:30 - 14:44	0	2	1	0	0	0	0	0	0	0	0	0	0	0	0	**3**
14:45 - 14:59	0	1	3	3	1	0	0	0	0	0	0	0	0	0	0	**8**
15:00 - 15:14	1	5	14	2	0	0	0	0	0	0	0	0	0	0	0	**22**
15:15 - 15:29	1	14	30	16	1	0	0	1	0	0	0	0	0	0	0	**63**
15:30 - 15:44	0	0	11	16	5	2	0	0	0	0	0	0	0	0	0	**34**
15:45 - 15:59	0	0	3	9	3	0	0	0	0	0	0	0	0	0	0	**15**
16:00 - 16:14	0	0	1	6	4	2	0	0	0	0	0	0	0	0	0	**13**
16:15 - 16:29	0	0	0	4	4	1	0	0	0	0	0	0	0	0	0	**9**
16:30 - 16:44	0	0	3	8	9	1	1	0	0	0	0	0	0	0	0	**22**
16:45 - 16:59	0	0	3	17	11	1	0	0	0	0	0	0	0	0	0	**32**
17:00 - 17:14	0	0	3	4	13	4	0	0	0	0	0	0	0	0	0	**24**
17:15 - 17:29	0	0	4	23	14	4	1	0	0	0	0	0	0	0	0	**46**
17:30 - 17:44	0	1	4	23	20	0	0	0	0	0	0	0	0	0	0	**48**
17:45 - 17:59	0	0	1	23	12	0	1	0	0	0	0	0	0	0	0	**37**
18:00 - 18:14	0	2	1	14	13	1	0	0	0	0	0	0	0	0	0	**31**
18:15 - 18:29	0	0	4	2	6	1	0	0	0	0	0	0	0	0	0	**13**
18:30 - 18:44	0	0	1	8	4	1	0	0	0	0	0	0	0	0	0	**14**
18:45 - 18:59	0	0	2	6	4	1	0	0	0	0	0	0	0	0	0	**13**
19:00 - 19:14	0	0	0	0	1	0	0	0	0	0	0	0	0	0	0	**1**
19:15 - 19:29	0	0	0	2	0	0	0	0	0	0	0	0	0	0	0	**2**
19:30 - 19:44	0	0	2	0	1	1	0	0	0	0	0	0	0	0	0	**4**
19:45 - 19:59	0	0	0	3	1	0	0	0	0	0	0	0	0	0	0	**4**
20:00 - 20:14	0	0	1	3	1	0	0	0	0	0	0	0	0	0	0	**5**
20:15 - 20:29	0	0	0	2	1	0	0	0	0	0	0	0	0	0	0	**3**
20:30 - 20:44	0	0	2	3	0	0	0	0	0	0	0	0	0	0	0	**5**
20:45 - 20:59	0	0	0	4	1	0	0	0	0	0	0	0	0	0	0	**5**
21:00 - 21:14	0	0	1	0	0	0	0	0	0	0	0	0	0	0	0	**1**
21:15 - 21:29	0	0	1	1	1	0	0	0	0	0	0	0	0	0	0	**3**
21:30 - 21:44	0	0	0	2	0	0	0	0	0	0	0	0	0	0	0	**2**
21:45 - 21:59	0	0	0	1	1	0	0	0	0	0	0	0	0	0	0	**2**
22:00 - 22:14	0	0	0	1	0	0	0	0	0	0	0	0	0	0	0	**1**
22:15 - 22:29	0	0	1	0	1	0	0	0	0	0	0	0	0	0	0	**2**
22:30 - 22:44	0	0	0	0	1	0	0	0	0	0	0	0	0	0	0	**1**
22:45 - 22:59	0	0	0	0	0	0	0	0	0	0	0	0	0	0	0	**0**
23:00 - 23:14	0	0	0	0	0	0	0	0	0	0	0	0	0	0	0	**0**
23:15 - 23:29	0	0	0	0	0	0	0	0	0	0	0	0	0	0	0	**0**
23:30 - 23:44	0	0	0	0	0	0	0	0	0	0	0	0	0	0	0	**0**
23:45 - 23:59	0	0	0	0	0	0	0	0	0	0	0	0	0	0	0	**0**
Totals	**2**	**30**	**131**	**258**	**154**	**22**	**3**	**1**	**0**	**0**	**0**	**1**	**0**	**0**	**0**	**602**
Percent of Total	**0.3**	**5.0**	**21.8**	**42.9**	**25.6**	**3.7**	**0.5**	**0.2**	**0.0**	**0.0**	**0.0**	**0.2**	**0.0**	**0.0**	**0.0**	**100**
Percent of AM	**0.0**	**6.0**	**32.1**	**46.4**	**11.9**	**2.4**	**0.0**	**0.0**	**0.0**	**0.0**	**0.0**	**1.2**	**0.0**	**0.0**	**0.0**	**100**
Percent of PM	**0.4**	**4.8**	**20.1**	**42.3**	**27.8**	**3.9**	**0.6**	**0.2**	**0.0**	**0.0**	**0.0**	**0.0**	**0.0**	**0.0**	**0.0**	**100**

Daily Westbound Speeds (MPH)

Study Date: Thursday, 10/04/2018
Unit ID: 0192
Location: SW 60TH ST / E OF SW 69TH CT

Standard Deviation:	5.3 MPH	Ten Mile Pace:	15 to 24 MPH	85th Percentile:	23.5 MPH
Mean Speed:	18.2 MPH	Percent in Ten Mile Pace:	68.4%	15th Percentile:	12.6 MPH
Median Speed:	18.2 MPH			90th Percentile:	24.7 MPH
Modal Speed:	18.0 MPH			95th Percentile:	25.9 MPH

Daily Eastbound Speeds (MPH)

Study Date: Tuesday, 09/18/2018
Unit ID: 0198
Location: SW 56TH ST / E OF SW 69TH CT

	1-5	6-10	11-15	16-20	21-25	26-30	31-35	36-40	41-45	46-50	51-55	56-60	61-65	66-70	71-99	Total
00:00 - 00:14	0	0	0	0	0	0	0	6	3	3	1	1	0	0	0	**14**
00:15 - 00:29	0	0	0	0	0	0	0	5	3	3	3	1	0	0	0	**15**
00:30 - 00:44	0	0	0	0	0	1	2	3	5	1	1	2	0	0	0	**15**
00:45 - 00:59	0	0	0	0	0	0	2	1	2	1	0	0	1	0	0	**7**
01:00 - 01:14	0	0	0	0	0	0	1	0	1	2	2	0	0	0	0	**6**
01:15 - 01:29	0	0	0	0	0	0	0	1	2	2	2	0	0	0	0	**7**
01:30 - 01:44	0	0	0	0	0	0	1	1	0	1	0	0	0	0	0	**3**
01:45 - 01:59	0	0	0	0	0	0	0	0	2	1	0	0	0	0	0	**3**
02:00 - 02:14	0	0	0	0	0	0	0	3	1	0	0	0	0	0	0	**4**
02:15 - 02:29	0	0	0	0	0	1	1	4	1	0	0	0	0	0	0	**7**
02:30 - 02:44	0	0	0	0	0	1	1	1	4	0	0	0	0	0	0	**7**
02:45 - 02:59	0	0	0	0	0	0	0	0	2	1	1	0	0	0	0	**4**
03:00 - 03:14	0	0	0	0	0	0	1	0	2	0	3	0	0	0	0	**6**
03:15 - 03:29	0	0	0	0	0	0	0	1	1	0	2	0	0	0	0	**4**
03:30 - 03:44	0	0	0	0	0	0	0	3	0	0	2	0	0	0	0	**5**
03:45 - 03:59	0	0	0	0	0	0	0	3	4	1	1	0	0	0	0	**9**
04:00 - 04:14	0	0	0	0	0	0	0	1	2	1	0	0	0	0	0	**4**
04:15 - 04:29	0	0	0	0	0	1	0	3	3	2	4	0	0	0	0	**13**
04:30 - 04:44	0	0	0	2	0	0	1	3	3	6	1	0	0	0	0	**16**
04:45 - 04:59	0	0	0	0	0	0	4	6	9	5	1	0	0	0	0	**25**
05:00 - 05:14	0	0	0	0	0	0	6	6	7	6	7	0	0	0	0	**32**
05:15 - 05:29	0	0	0	0	0	1	4	3	6	11	4	6	4	1	0	**40**
05:30 - 05:44	0	0	0	0	0	0	4	11	23	28	12	6	1	0	0	**85**
05:45 - 05:59	0	0	0	0	0	0	15	23	32	34	15	8	1	1	0	**129**
06:00 - 06:14	0	0	0	1	2	5	10	20	45	28	17	2	1	1	0	**132**
06:15 - 06:29	0	0	0	1	1	15	20	66	68	48	14	6	0	0	0	**239**
06:30 - 06:44	0	0	0	1	2	26	71	124	80	35	8	1	1	0	0	**349**
06:45 - 06:59	0	0	1	0	9	59	121	118	50	22	7	0	0	0	0	**387**
07:00 - 07:14	1	2	33	78	60	65	51	18	6	1	0	0	0	0	0	**315**
07:15 - 07:29	0	0	20	67	58	63	38	21	12	1	0	0	0	0	0	**280**
07:30 - 07:44	0	2	22	66	79	71	48	19	3	0	0	0	0	0	0	**310**
07:45 - 07:59	0	2	7	44	52	73	50	25	5	1	0	0	0	0	0	**259**
08:00 - 08:14	0	0	0	8	39	81	125	85	19	6	0	0	0	0	0	**363**
08:15 - 08:29	2	7	20	28	57	55	63	22	7	3	0	1	0	0	0	**265**
08:30 - 08:44	0	6	5	23	31	28	50	67	31	8	0	1	0	0	0	**250**
08:45 - 08:59	0	0	0	0	8	21	73	154	56	15	3	2	0	0	0	**332**
09:00 - 09:14	0	0	0	2	3	23	80	156	99	24	6	3	0	0	0	**396**
09:15 - 09:29	0	0	0	0	1	8	70	107	98	31	10	1	0	0	0	**326**
09:30 - 09:44	0	0	0	1	1	19	78	95	69	18	3	0	1	0	0	**285**
09:45 - 09:59	0	0	1	1	1	12	58	115	67	25	7	3	0	0	0	**290**
10:00 - 10:14	0	0	0	0	2	11	30	75	74	27	7	2	2	0	0	**230**
10:15 - 10:29	0	0	0	0	2	21	84	104	49	13	1	0	0	1	0	**275**
10:30 - 10:44	0	0	0	0	1	17	67	71	74	27	4	2	0	1	0	**264**
10:45 - 10:59	0	0	0	0	0	5	47	110	73	19	4	2	0	0	0	**260**
11:00 - 11:14	0	1	0	1	0	7	31	64	43	24	4	0	1	0	0	**176**
11:15 - 11:29	0	0	0	0	1	12	43	73	51	12	6	1	2	0	0	**201**
11:30 - 11:44	0	0	0	0	2	13	37	76	55	19	6	1	0	0	0	**209**
11:45 - 11:59	0	0	0	0	4	9	37	70	52	26	6	1	0	0	0	**205**
12:00 - 12:14	0	0	0	1	1	13	48	69	49	22	3	0	0	0	0	**206**
12:15 - 12:29	0	0	0	0	3	10	41	64	51	20	10	2	0	0	1	**202**
12:30 - 12:44	0	1	0	0	1	4	23	54	39	24	10	3	0	0	0	**159**

Daily Eastbound Speeds (MPH)

Study Date: Tuesday, 09/18/2018
Unit ID: 0198
Location: SW 56TH ST / E OF SW 69TH CT

	1-5	6-10	11-15	16-20	21-25	26-30	31-35	36-40	41-45	46-50	51-55	56-60	61-65	66-70	71-99	Total
12:45 - 12:59	0	0	0	1	6	17	30	58	55	24	7	2	0	0	0	**200**
13:00 - 13:14	0	0	0	0	1	2	36	63	52	23	6	1	1	0	0	**185**
13:15 - 13:29	0	0	0	0	2	15	27	63	37	17	8	4	0	0	0	**173**
13:30 - 13:44	0	0	0	1	0	13	46	61	49	24	6	4	0	0	0	**204**
13:45 - 13:59	0	0	0	0	2	8	57	71	52	11	6	0	0	1	0	**208**
14:00 - 14:14	1	0	4	12	33	33	36	62	26	3	1	1	0	0	0	**212**
14:15 - 14:29	0	2	6	21	29	38	46	41	12	5	1	0	0	0	0	**201**
14:30 - 14:44	0	0	7	30	35	58	55	30	11	4	1	0	0	0	0	**231**
14:45 - 14:59	0	0	0	2	25	32	63	56	12	6	1	1	0	0	0	**198**
15:00 - 15:14	0	0	0	0	7	33	58	55	23	8	2	0	0	0	0	**186**
15:15 - 15:29	0	0	0	0	6	28	78	44	29	10	0	0	0	0	0	**195**
15:30 - 15:44	0	0	0	1	0	9	73	67	32	15	5	1	0	0	0	**203**
15:45 - 15:59	0	0	0	0	0	12	46	65	45	20	1	1	0	0	0	**190**
16:00 - 16:14	0	0	0	1	1	15	51	76	24	14	3	0	2	0	0	**187**
16:15 - 16:29	0	0	0	0	0	8	62	66	35	14	1	0	0	1	0	**187**
16:30 - 16:44	0	0	0	0	1	7	66	68	41	14	1	0	0	0	0	**198**
16:45 - 16:59	0	0	0	0	2	5	56	84	38	15	3	0	1	0	0	**204**
17:00 - 17:14	0	0	0	0	7	15	50	74	35	7	2	1	0	0	0	**191**
17:15 - 17:29	0	0	0	0	3	18	34	59	53	9	6	1	0	0	0	**183**
17:30 - 17:44	0	0	2	5	5	13	50	72	30	14	3	0	0	0	0	**194**
17:45 - 17:59	0	0	0	0	1	19	51	70	30	16	7	1	0	0	0	**195**
18:00 - 18:14	0	0	0	1	9	20	51	65	49	20	3	2	0	0	0	**220**
18:15 - 18:29	0	0	0	0	0	7	37	82	44	15	4	1	1	0	0	**191**
18:30 - 18:44	0	0	1	0	2	2	29	61	57	19	5	2	0	0	0	**178**
18:45 - 18:59	0	0	0	0	2	7	37	58	35	14	5	2	1	0	0	**161**
19:00 - 19:14	0	1	0	0	1	4	35	39	49	13	2	1	0	0	0	**145**
19:15 - 19:29	0	0	0	0	1	3	34	56	31	12	0	1	0	0	1	**139**
19:30 - 19:44	0	0	0	0	2	11	34	35	31	12	1	0	2	0	0	**128**
19:45 - 19:59	0	0	0	0	0	1	21	39	34	9	3	5	0	0	0	**112**
20:00 - 20:14	0	0	0	0	0	4	8	42	31	14	3	1	0	0	0	**103**
20:15 - 20:29	0	0	0	0	0	5	25	42	33	9	3	3	0	0	0	**120**
20:30 - 20:44	0	0	0	0	0	4	22	39	30	17	8	0	0	1	0	**121**
20:45 - 20:59	0	0	0	0	0	1	8	23	31	22	4	1	0	0	0	**90**
21:00 - 21:14	0	0	0	0	0	1	6	25	33	18	5	1	0	0	0	**89**
21:15 - 21:29	0	0	0	0	0	4	10	24	27	10	8	0	0	0	0	**83**
21:30 - 21:44	0	0	0	0	1	1	10	22	17	9	6	0	0	0	0	**66**
21:45 - 21:59	0	0	0	0	0	2	9	18	22	10	7	2	0	0	0	**70**
22:00 - 22:14	0	0	0	0	0	0	11	16	18	7	5	0	0	0	0	**57**
22:15 - 22:29	0	0	0	0	2	1	9	11	21	6	4	3	0	0	0	**57**
22:30 - 22:44	0	0	0	0	0	1	0	10	15	14	4	4	0	0	0	**48**
22:45 - 22:59	0	0	0	0	0	0	5	5	17	16	5	2	0	0	0	**50**
23:00 - 23:14	0	0	0	0	0	0	2	9	11	5	4	2	0	0	1	**34**
23:15 - 23:29	0	0	0	0	0	1	2	8	7	9	3	1	0	0	0	**31**
23:30 - 23:44	0	0	0	0	0	1	5	8	6	6	4	2	1	0	0	**33**
23:45 - 23:59	0	0	0	0	0	0	0	5	10	3	2	0	1	0	0	**21**
Totals	**4**	**24**	**129**	**400**	**607**	**1230**	**3018**	**4177**	**2823**	**1170**	**367**	**112**	**25**	**8**	**3**	**14097**
Percent of Total	**0.0**	**0.2**	**0.9**	**2.8**	**4.3**	**8.7**	**21.4**	**29.6**	**20.0**	**8.3**	**2.6**	**0.8**	**0.2**	**0.1**	**0.0**	**100**
Percent of AM	**0.0**	**0.3**	**1.5**	**4.6**	**5.9**	**10.3**	**20.2**	**27.5**	**18.5**	**7.7**	**2.5**	**0.8**	**0.2**	**0.1**	**0.0**	**100**
Percent of PM	**0.0**	**0.1**	**0.3**	**1.1**	**2.7**	**7.2**	**22.6**	**31.7**	**21.6**	**8.9**	**2.7**	**0.8**	**0.1**	**0.0**	**0.0**	**100**

Daily Eastbound Speeds (MPH)

Study Date: Tuesday, 09/18/2018
Unit ID: 0198
Location: SW 56TH ST / E OF SW 69TH CT

Standard Deviation:	8.3 MPH	Ten Mile Pace:	31 to 40 MPH	85th Percentile:	45.2 MPH
Mean Speed:	37.5 MPH	Percent in Ten Mile Pace:	51.0%	15th Percentile:	29.9 MPH
Median Speed:	38.0 MPH			90th Percentile:	47.2 MPH
Modal Speed:	38.5 MPH			95th Percentile:	50.2 MPH

Daily Eastbound Speeds (MPH)

Study Date: Wednesday, 09/19/2018
Unit ID: 0198
Location: SW 56TH ST / E OF SW 69TH CT

	1-5	6-10	11-15	16-20	21-25	26-30	31-35	36-40	41-45	46-50	51-55	56-60	61-65	66-70	71-99	Total
00:00 - 00:14	0	0	0	0	0	0	3	2	3	1	1	0	1	0	0	**11**
00:15 - 00:29	0	0	0	0	0	0	1	3	6	6	2	1	0	0	0	**19**
00:30 - 00:44	0	0	0	0	0	0	3	2	6	4	0	0	0	0	0	**15**
00:45 - 00:59	0	0	0	0	1	1	2	0	5	3	1	0	0	0	0	**13**
01:00 - 01:14	0	0	0	0	0	0	2	3	2	3	1	0	0	0	0	**11**
01:15 - 01:29	0	0	0	0	0	0	1	2	3	0	2	0	1	0	0	**9**
01:30 - 01:44	0	0	0	0	0	2	0	3	2	0	0	0	0	0	0	**7**
01:45 - 01:59	0	0	0	0	0	0	1	0	2	2	1	0	0	0	0	**6**
02:00 - 02:14	0	0	0	0	0	0	1	2	1	1	0	0	0	0	0	**5**
02:15 - 02:29	0	0	0	0	0	0	0	1	1	2	0	0	0	0	0	**4**
02:30 - 02:44	0	0	0	0	0	0	0	3	1	0	0	0	0	0	0	**4**
02:45 - 02:59	0	0	0	0	0	3	0	2	1	1	0	0	0	0	0	**7**
03:00 - 03:14	0	0	0	0	0	0	1	0	0	0	0	0	0	0	0	**1**
03:15 - 03:29	0	0	0	0	0	0	0	2	4	1	0	0	0	0	0	**7**
03:30 - 03:44	0	0	0	0	0	0	1	1	3	0	0	0	0	0	0	**5**
03:45 - 03:59	0	0	0	0	0	0	0	2	3	2	1	1	0	0	0	**9**
04:00 - 04:14	0	0	0	0	0	0	0	1	2	1	1	0	0	0	0	**5**
04:15 - 04:29	0	1	0	0	0	1	1	4	1	2	0	2	0	1	0	**13**
04:30 - 04:44	0	0	0	0	0	1	0	6	8	6	2	0	0	0	0	**23**
04:45 - 04:59	0	0	0	0	0	0	1	4	4	7	4	2	1	0	0	**23**
05:00 - 05:14	0	0	0	0	0	1	5	3	8	10	2	3	1	0	0	**33**
05:15 - 05:29	0	0	0	0	2	0	3	6	12	17	8	7	1	0	0	**56**
05:30 - 05:44	0	0	0	0	0	0	4	12	10	24	8	5	3	0	0	**66**
05:45 - 05:59	0	0	0	0	0	3	4	13	21	31	16	7	3	0	0	**98**
06:00 - 06:14	0	0	0	0	0	0	6	10	36	33	12	7	1	0	0	**105**
06:15 - 06:29	0	0	0	0	2	4	13	52	71	37	14	5	3	0	0	**201**
06:30 - 06:44	0	0	0	1	7	7	47	74	88	36	6	4	2	0	0	**272**
06:45 - 06:59	0	0	0	1	3	7	58	135	81	19	8	1	0	0	0	**313**
07:00 - 07:14	1	0	0	1	32	25	81	68	55	15	3	0	2	0	0	**283**
07:15 - 07:29	0	0	3	9	24	44	99	71	36	9	0	0	0	0	0	**295**
07:30 - 07:44	0	0	1	3	30	60	123	86	29	5	1	1	0	0	0	**339**
07:45 - 07:59	0	0	0	1	20	69	131	81	30	11	1	0	0	0	0	**344**
08:00 - 08:14	0	0	0	1	19	76	89	105	31	8	2	1	0	0	0	**332**
08:15 - 08:29	0	0	0	0	12	42	113	95	37	7	3	0	0	0	0	**309**
08:30 - 08:44	0	0	0	2	2	20	108	128	68	21	1	1	0	0	0	**351**
08:45 - 08:59	0	0	0	0	0	51	98	120	64	17	6	2	0	0	0	**358**
09:00 - 09:14	0	0	0	1	6	33	94	112	72	26	6	1	0	0	0	**351**
09:15 - 09:29	0	0	1	0	3	8	83	101	58	36	4	0	0	0	0	**294**
09:30 - 09:44	0	0	0	3	2	13	46	129	73	15	6	3	0	0	0	**290**
09:45 - 09:59	0	0	0	0	4	27	94	114	77	13	10	2	0	0	0	**341**
10:00 - 10:14	0	0	0	1	3	12	59	88	50	17	8	0	0	0	0	**238**
10:15 - 10:29	0	1	0	0	2	4	35	84	60	22	6	3	0	0	0	**217**
10:30 - 10:44	0	0	0	0	4	22	50	65	60	22	5	4	0	0	0	**232**
10:45 - 10:59	0	1	1	0	1	11	33	70	72	23	5	2	0	0	0	**219**
11:00 - 11:14	0	0	0	0	0	5	26	69	56	22	7	0	1	0	0	**186**
11:15 - 11:29	0	0	0	0	0	5	48	76	43	16	6	1	0	0	0	**195**
11:30 - 11:44	0	0	0	0	3	14	38	63	66	29	3	1	0	0	0	**217**
11:45 - 11:59	0	1	1	1	0	14	46	69	52	18	9	0	0	0	0	**211**
12:00 - 12:14	0	0	0	0	0	10	56	61	39	24	7	3	0	1	0	**201**
12:15 - 12:29	0	0	0	1	4	8	42	61	42	14	9	2	0	0	0	**183**
12:30 - 12:44	0	0	0	0	2	9	36	66	56	24	3	4	1	0	0	**201**

Daily Eastbound Speeds (MPH)

Study Date: Wednesday, 09/19/2018
Unit ID: 0198
Location: SW 56TH ST / E OF SW 69TH CT

	1-5	6-10	11-15	16-20	21-25	26-30	31-35	36-40	41-45	46-50	51-55	56-60	61-65	66-70	71-99	Total
12:45 - 12:59	0	0	0	0	2	6	29	61	77	24	8	2	0	0	0	**209**
13:00 - 13:14	0	0	0	0	2	5	31	57	60	24	9	1	0	0	0	**189**
13:15 - 13:29	0	0	0	0	0	2	28	73	64	25	5	3	0	0	0	**200**
13:30 - 13:44	0	0	0	0	4	15	46	59	64	19	5	0	0	0	0	**212**
13:45 - 13:59	0	0	0	0	1	7	40	72	52	16	9	1	1	0	0	**199**
14:00 - 14:14	0	0	0	1	1	9	40	64	50	14	6	0	0	0	0	**185**
14:15 - 14:29	0	0	0	1	9	14	32	77	26	13	3	0	0	0	0	**175**
14:30 - 14:44	0	0	0	0	4	18	51	61	36	22	3	0	0	0	0	**195**
14:45 - 14:59	0	0	0	0	14	29	58	51	30	8	2	0	0	0	0	**192**
15:00 - 15:14	0	0	0	0	1	6	44	72	36	16	2	1	0	0	0	**178**
15:15 - 15:29	0	0	0	0	2	14	54	60	31	15	4	1	0	0	0	**181**
15:30 - 15:44	0	0	0	0	1	6	51	81	55	15	0	0	0	0	0	**209**
15:45 - 15:59	0	0	0	1	1	6	32	48	47	12	2	0	0	0	0	**149**
16:00 - 16:14	0	0	0	2	0	5	28	62	53	19	2	1	0	0	0	**172**
16:15 - 16:29	0	0	2	6	8	7	27	57	37	13	3	0	0	0	0	**160**
16:30 - 16:44	0	0	0	0	1	6	29	63	38	20	2	2	1	0	1	**163**
16:45 - 16:59	0	0	0	0	2	4	52	67	46	13	1	1	1	0	1	**188**
17:00 - 17:14	0	0	0	0	0	6	34	57	41	21	6	0	0	0	0	**165**
17:15 - 17:29	0	0	0	0	2	6	46	81	56	15	7	1	1	0	0	**215**
17:30 - 17:44	0	0	0	0	0	5	30	74	59	20	4	2	1	0	0	**195**
17:45 - 17:59	0	0	0	0	0	5	45	79	49	15	3	0	0	0	0	**196**
18:00 - 18:14	0	0	0	0	2	14	33	79	36	19	6	3	0	0	0	**192**
18:15 - 18:29	0	0	0	0	2	9	31	71	57	16	3	0	0	0	0	**189**
18:30 - 18:44	0	0	0	0	1	6	49	68	35	11	3	2	0	0	0	**175**
18:45 - 18:59	0	0	0	2	2	7	28	69	33	12	6	2	0	0	0	**161**
19:00 - 19:14	0	0	0	0	1	4	23	53	31	26	3	1	0	1	1	**144**
19:15 - 19:29	0	0	0	0	0	5	33	34	27	16	3	0	0	0	1	**119**
19:30 - 19:44	0	0	0	1	0	6	30	55	28	13	7	1	0	1	0	**142**
19:45 - 19:59	0	0	0	0	0	6	18	36	20	18	6	1	0	0	0	**105**
20:00 - 20:14	0	0	0	0	0	3	17	39	43	22	4	0	0	0	0	**128**
20:15 - 20:29	0	0	0	0	1	1	14	30	31	21	3	2	1	0	0	**104**
20:30 - 20:44	0	0	0	0	0	3	11	35	31	21	6	1	1	0	1	**110**
20:45 - 20:59	0	0	0	0	0	0	8	28	26	22	6	1	1	1	0	**93**
21:00 - 21:14	0	0	0	0	1	5	13	24	26	12	5	2	0	0	0	**88**
21:15 - 21:29	0	0	0	0	2	0	12	27	25	16	9	1	0	0	0	**92**
21:30 - 21:44	0	0	0	0	0	2	7	16	25	18	3	0	1	0	0	**72**
21:45 - 21:59	0	0	0	0	0	2	2	23	21	14	0	0	0	0	0	**62**
22:00 - 22:14	0	0	0	1	0	2	8	19	17	16	8	2	0	0	0	**73**
22:15 - 22:29	0	0	0	0	0	2	5	17	18	10	3	1	1	0	0	**57**
22:30 - 22:44	0	0	0	0	0	1	4	4	8	9	2	2	0	0	0	**30**
22:45 - 22:59	0	0	0	0	0	0	6	8	13	13	7	0	0	0	0	**47**
23:00 - 23:14	0	0	0	0	1	0	2	9	4	10	4	1	0	0	0	**31**
23:15 - 23:29	0	0	0	0	0	0	4	11	13	4	5	1	2	0	0	**40**
23:30 - 23:44	0	0	0	0	0	0	4	5	7	5	1	0	0	0	0	**22**
23:45 - 23:59	0	0	0	0	0	1	2	4	10	1	1	1	1	0	0	**21**
Totals	**1**	**4**	**9**	**41**	**256**	**872**	**2977**	**4470**	**3203**	**1367**	**391**	**117**	**34**	**5**	**5**	**13752**
Percent of Total	**0.0**	**0.0**	**0.1**	**0.3**	**1.9**	**6.3**	**21.6**	**32.5**	**23.3**	**9.9**	**2.8**	**0.9**	**0.2**	**0.0**	**0.0**	**100**
Percent of AM	**0.0**	**0.1**	**0.1**	**0.4**	**2.6**	**8.4**	**23.8**	**30.9**	**21.2**	**8.7**	**2.6**	**1.0**	**0.3**	**0.0**	**0.0**	**100**
Percent of PM	**0.0**	**0.0**	**0.0**	**0.2**	**1.1**	**4.2**	**19.5**	**34.2**	**25.4**	**11.2**	**3.1**	**0.7**	**0.2**	**0.1**	**0.1**	**100**

Daily Eastbound Speeds (MPH)

Study Date: Wednesday, 09/19/2018
Unit ID: 0198
Location: SW 56TH ST / E OF SW 69TH CT

Standard Deviation:	6.9 MPH	Ten Mile Pace:	36 to 45 MPH	85th Percentile:	45.8 MPH
Mean Speed:	39.3 MPH	Percent in Ten Mile Pace:	55.8%		
Median Speed:	39.0 MPH			15th Percentile:	32.5 MPH
Modal Speed:	38.5 MPH			90th Percentile:	48.0 MPH
				95th Percentile:	50.5 MPH

Daily Eastbound Speeds (MPH)

Study Date: Thursday, 09/20/2018
Unit ID: 0198
Location: SW 56TH ST / E OF SW 69TH CT

	1-5	6-10	11-15	16-20	21-25	26-30	31-35	36-40	41-45	46-50	51-55	56-60	61-65	66-70	71-99	Total
00:00 - 00:14	0	0	0	0	0	0	2	3	6	3	1	0	1	0	0	**16**
00:15 - 00:29	0	0	0	0	0	0	1	3	4	0	1	1	0	0	0	**10**
00:30 - 00:44	0	0	0	0	0	0	2	3	7	2	1	0	1	0	0	**16**
00:45 - 00:59	0	0	0	0	0	1	0	2	4	4	1	0	0	0	0	**12**
01:00 - 01:14	0	0	0	0	0	2	0	3	4	1	1	0	0	0	0	**11**
01:15 - 01:29	0	0	1	0	0	1	4	3	3	1	1	0	0	0	0	**14**
01:30 - 01:44	0	0	0	0	0	0	1	3	3	1	2	1	0	0	0	**11**
01:45 - 01:59	0	0	0	0	0	0	0	0	5	3	2	1	0	0	0	**11**
02:00 - 02:14	0	0	0	0	0	0	0	1	5	2	1	1	0	0	0	**10**
02:15 - 02:29	0	0	0	0	0	0	1	0	0	1	0	0	0	0	0	**2**
02:30 - 02:44	0	0	0	0	0	0	1	1	1	0	0	0	0	0	0	**3**
02:45 - 02:59	0	0	0	0	0	0	1	0	2	1	0	0	1	0	0	**5**
03:00 - 03:14	0	0	0	0	0	1	1	0	1	0	1	0	0	0	1	**5**
03:15 - 03:29	0	0	0	0	0	1	3	3	0	0	0	1	0	0	0	**8**
03:30 - 03:44	0	0	0	0	0	1	2	1	1	1	0	0	0	0	0	**6**
03:45 - 03:59	0	0	0	0	0	0	1	5	2	0	1	0	0	0	0	**9**
04:00 - 04:14	0	0	0	0	0	0	0	3	2	1	1	1	0	0	0	**8**
04:15 - 04:29	0	0	0	0	0	0	0	2	3	0	1	0	0	0	0	**6**
04:30 - 04:44	0	0	0	0	1	0	2	5	5	6	2	2	1	0	0	**24**
04:45 - 04:59	0	0	0	0	1	0	2	4	7	7	9	2	0	1	0	**33**
05:00 - 05:14	0	0	0	0	0	1	4	3	1	9	3	2	1	0	0	**24**
05:15 - 05:29	0	0	0	0	0	1	5	2	8	17	10	4	2	0	0	**49**
05:30 - 05:44	0	0	0	1	0	1	4	5	21	30	13	5	1	0	0	**81**
05:45 - 05:59	2	1	0	0	3	3	6	17	29	31	19	6	2	0	0	**119**
06:00 - 06:14	0	0	0	0	0	1	4	28	49	34	22	5	2	0	0	**145**
06:15 - 06:29	0	0	0	0	1	7	27	77	61	49	19	4	2	0	0	**247**
06:30 - 06:44	0	0	0	2	1	6	51	117	97	31	10	1	0	0	0	**316**
06:45 - 06:59	0	0	0	1	10	36	120	140	49	20	4	0	0	0	0	**380**
07:00 - 07:14	0	2	35	56	46	78	57	29	7	1	0	0	0	0	0	**311**
07:15 - 07:29	0	3	44	74	55	54	23	9	8	0	0	0	0	0	0	**270**
07:30 - 07:44	0	0	9	67	100	66	35	21	7	2	0	0	0	0	0	**307**
07:45 - 07:59	0	2	21	47	37	55	70	35	13	1	0	0	0	0	0	**281**
08:00 - 08:14	0	0	0	5	21	75	104	96	21	6	1	0	0	0	0	**329**
08:15 - 08:29	0	0	0	1	5	41	101	150	51	12	1	2	0	0	0	**364**
08:30 - 08:44	0	0	0	0	5	39	84	90	52	13	3	0	0	0	0	**286**
08:45 - 08:59	0	0	0	0	3	37	104	139	48	18	4	0	0	0	0	**353**
09:00 - 09:14	0	0	0	0	0	36	98	118	79	16	3	1	1	0	0	**352**
09:15 - 09:29	0	0	0	0	1	8	57	111	78	21	5	1	1	0	1	**284**
09:30 - 09:44	0	0	0	0	1	12	76	106	71	18	4	0	0	0	0	**288**
09:45 - 09:59	0	0	0	0	4	34	88	99	55	20	4	5	0	0	0	**309**
10:00 - 10:14	0	0	0	0	9	14	49	97	71	21	5	1	0	0	0	**267**
10:15 - 10:29	0	0	0	0	3	19	40	99	61	18	8	0	0	0	0	**248**
10:30 - 10:44	0	0	0	0	1	3	30	78	56	33	16	2	0	0	0	**219**
10:45 - 10:59	0	0	0	1	0	24	43	57	45	38	10	5	0	0	0	**223**
11:00 - 11:14	0	0	0	1	4	13	37	56	35	20	7	3	0	0	0	**176**
11:15 - 11:29	0	0	0	0	3	15	57	66	52	21	6	0	0	0	0	**220**
11:30 - 11:44	0	0	0	0	1	7	31	73	50	27	6	1	0	0	0	**196**
11:45 - 11:59	0	1	4	5	2	9	33	66	54	21	4	0	1	0	0	**200**
12:00 - 12:14	0	0	0	0	2	11	53	74	48	21	6	1	0	0	0	**216**
12:15 - 12:29	0	0	0	0	5	18	57	82	35	17	3	3	0	0	0	**220**
12:30 - 12:44	0	0	0	1	1	13	49	72	49	13	6	0	0	0	0	**204**

Daily Eastbound Speeds (MPH)

Study Date: Thursday, 09/20/2018
Unit ID: 0198
Location: SW 56TH ST / E OF SW 69TH CT

	1-5	6-10	11-15	16-20	21-25	26-30	31-35	36-40	41-45	46-50	51-55	56-60	61-65	66-70	71-99	Total
12:45 - 12:59	0	0	0	1	1	9	45	68	38	19	5	1	0	0	0	**187**
13:00 - 13:14	0	0	0	0	3	16	61	53	35	10	3	0	0	0	0	**181**
13:15 - 13:29	0	0	0	0	0	3	37	66	59	24	8	1	0	0	0	**198**
13:30 - 13:44	0	0	0	2	7	16	50	65	40	10	2	0	0	0	0	**192**
13:45 - 13:59	0	0	1	2	5	22	87	75	25	5	4	0	0	0	0	**226**
14:00 - 14:14	0	0	10	26	26	31	48	37	20	7	1	0	0	0	0	**206**
14:15 - 14:29	0	0	0	12	36	30	69	42	9	4	1	0	0	0	0	**203**
14:30 - 14:44	0	1	2	24	56	52	44	29	14	2	0	0	1	0	0	**225**
14:45 - 14:59	0	0	1	1	21	44	60	46	16	2	0	0	0	0	0	**191**
15:00 - 15:14	0	0	0	3	22	31	33	83	38	10	2	0	1	0	0	**223**
15:15 - 15:29	0	0	0	3	12	45	88	52	23	7	1	0	0	0	0	**231**
15:30 - 15:44	0	0	0	0	0	15	84	67	31	14	1	0	0	0	0	**212**
15:45 - 15:59	0	0	0	0	3	10	80	74	34	6	1	1	0	0	0	**209**
16:00 - 16:14	0	0	0	0	0	9	60	66	43	14	2	0	1	0	0	**195**
16:15 - 16:29	0	0	1	0	1	17	77	74	37	7	1	0	0	0	0	**215**
16:30 - 16:44	0	1	0	0	1	31	72	64	24	8	2	2	0	0	0	**205**
16:45 - 16:59	0	0	0	0	6	10	46	84	46	7	4	1	0	0	0	**204**
17:00 - 17:14	0	0	0	0	2	13	52	86	47	17	4	2	0	0	0	**223**
17:15 - 17:29	0	0	0	0	2	8	44	71	46	11	3	1	0	0	0	**186**
17:30 - 17:44	0	0	0	0	0	23	57	78	45	17	3	0	0	0	0	**223**
17:45 - 17:59	0	0	0	1	0	23	57	84	41	20	4	0	0	0	0	**230**
18:00 - 18:14	0	0	0	0	1	4	40	67	45	18	5	1	0	0	0	**181**
18:15 - 18:29	0	0	0	0	0	10	42	77	40	10	7	0	0	0	0	**186**
18:30 - 18:44	0	0	0	3	5	6	27	63	45	9	4	1	0	0	0	**163**
18:45 - 18:59	0	0	0	0	1	15	35	66	31	12	2	3	0	0	0	**165**
19:00 - 19:14	0	0	0	0	1	14	65	66	30	14	7	1	1	1	0	**200**
19:15 - 19:29	0	0	0	0	2	15	26	68	36	17	4	2	1	0	0	**171**
19:30 - 19:44	0	0	0	0	0	4	36	46	42	8	2	2	0	0	0	**140**
19:45 - 19:59	0	0	0	0	0	5	15	37	43	21	6	0	0	0	0	**127**
20:00 - 20:14	0	0	0	0	1	1	32	31	41	20	5	0	0	1	0	**132**
20:15 - 20:29	0	0	0	0	0	2	30	39	37	17	12	1	1	0	0	**139**
20:30 - 20:44	0	0	0	0	0	2	11	42	28	17	4	1	0	1	0	**106**
20:45 - 20:59	0	0	0	0	0	2	6	40	24	13	6	1	3	1	0	**96**
21:00 - 21:14	0	0	0	0	0	6	7	30	32	15	1	0	0	0	0	**91**
21:15 - 21:29	0	0	0	0	1	1	15	27	28	10	4	0	0	0	0	**86**
21:30 - 21:44	0	0	0	0	0	3	10	18	17	21	1	2	0	0	0	**72**
21:45 - 21:59	0	0	0	0	0	2	8	16	24	22	3	2	0	0	0	**77**
22:00 - 22:14	0	0	0	0	0	0	10	18	12	10	5	0	0	0	0	**55**
22:15 - 22:29	0	0	0	0	0	1	12	17	23	13	4	0	0	0	0	**70**
22:30 - 22:44	0	0	0	0	0	0	9	11	16	9	2	3	2	1	0	**53**
22:45 - 22:59	0	0	0	0	0	2	8	10	5	12	5	1	1	0	0	**44**
23:00 - 23:14	0	0	0	0	0	0	1	14	14	7	4	1	1	1	1	**44**
23:15 - 23:29	0	0	0	0	0	1	3	10	10	6	1	1	0	0	0	**32**
23:30 - 23:44	0	0	0	0	0	0	3	5	6	4	1	1	0	0	0	**20**
23:45 - 23:59	0	0	0	0	0	0	5	6	11	4	2	0	0	0	0	**28**
Totals	**2**	**11**	**129**	**340**	**542**	**1298**	**3328**	**4445**	**2777**	**1163**	**377**	**95**	**30**	**7**	**3**	**14547**
Percent of Total	**0.0**	**0.1**	**0.9**	**2.3**	**3.7**	**8.9**	**22.9**	**30.6**	**19.1**	**8.0**	**2.6**	**0.7**	**0.2**	**0.0**	**0.0**	**100**
Percent of AM	**0.0**	**0.1**	**1.6**	**3.7**	**4.5**	**9.9**	**20.7**	**28.7**	**18.3**	**8.2**	**3.0**	**0.8**	**0.2**	**0.0**	**0.0**	**100**
Percent of PM	**0.0**	**0.0**	**0.2**	**1.1**	**3.0**	**8.0**	**24.9**	**32.3**	**19.8**	**7.8**	**2.2**	**0.5**	**0.2**	**0.1**	**0.0**	**100**

Daily Eastbound Speeds (MPH)

Study Date: Thursday, 09/20/2018
Unit ID: 0198
Location: SW 56TH ST / E OF SW 69TH CT

Standard Deviation:	8.0 MPH	Ten Mile Pace:	31 to 40 MPH	85th Percentile:	45.1 MPH
Mean Speed:	37.5 MPH	Percent in Ten Mile Pace:	53.4%	15th Percentile:	30.5 MPH
Median Speed:	37.8 MPH			90th Percentile:	46.9 MPH
Modal Speed:	38.5 MPH			95th Percentile:	50.1 MPH

Daily Westbound Speeds (MPH)

Study Date: Tuesday, 09/18/2018
Unit ID: 0186
Location: SW 56TH ST / E OF SW 69TH CT

	1-5	6-10	11-15	16-20	21-25	26-30	31-35	36-40	41-45	46-50	51-55	56-60	61-65	66-70	71-99	Total
00:00 - 00:14	0	0	0	0	0	0	2	10	7	6	1	1	0	0	0	**27**
00:15 - 00:29	0	0	0	0	0	0	2	10	6	2	2	2	0	0	0	**24**
00:30 - 00:44	0	0	0	0	0	0	6	5	1	1	2	0	0	0	0	**15**
00:45 - 00:59	0	0	0	0	0	0	2	5	0	2	0	1	0	0	0	**10**
01:00 - 01:14	0	0	0	0	0	0	1	1	4	1	3	0	0	0	0	**10**
01:15 - 01:29	0	0	0	0	0	0	2	3	2	1	0	0	0	0	0	**8**
01:30 - 01:44	0	0	0	0	0	0	1	1	0	2	2	0	0	0	0	**6**
01:45 - 01:59	0	0	0	0	0	0	4	1	2	2	0	0	0	0	0	**9**
02:00 - 02:14	0	0	0	0	0	0	0	2	3	0	0	0	0	0	0	**5**
02:15 - 02:29	0	0	0	0	0	0	3	2	4	0	0	0	0	0	0	**9**
02:30 - 02:44	0	0	0	0	0	1	0	2	2	1	0	0	0	0	0	**6**
02:45 - 02:59	0	0	0	0	0	0	0	2	2	0	1	0	0	0	0	**5**
03:00 - 03:14	0	0	0	0	0	0	1	0	3	0	0	0	0	0	0	**4**
03:15 - 03:29	0	0	0	0	0	3	0	0	0	1	0	0	0	0	0	**4**
03:30 - 03:44	0	0	0	0	0	0	0	2	0	0	1	0	0	0	0	**3**
03:45 - 03:59	0	0	0	0	0	0	0	1	1	1	1	0	0	0	0	**4**
04:00 - 04:14	0	0	0	0	0	0	0	0	2	2	0	0	0	0	0	**4**
04:15 - 04:29	0	0	0	0	0	0	0	0	1	1	1	0	0	0	0	**3**
04:30 - 04:44	0	0	0	0	0	0	1	1	5	5	0	1	0	0	0	**13**
04:45 - 04:59	0	0	0	0	0	0	1	1	3	2	3	0	0	0	0	**10**
05:00 - 05:14	0	0	0	0	0	0	3	2	8	2	2	0	0	0	0	**17**
05:15 - 05:29	0	0	0	0	0	0	1	2	8	3	1	1	0	0	0	**16**
05:30 - 05:44	0	0	0	0	1	1	1	7	6	6	1	2	0	0	0	**25**
05:45 - 05:59	0	0	0	0	0	1	5	13	9	5	2	0	0	0	0	**35**
06:00 - 06:14	0	0	0	0	1	1	9	17	18	11	5	0	0	0	0	**62**
06:15 - 06:29	0	0	0	0	2	4	7	16	21	9	5	3	0	1	0	**68**
06:30 - 06:44	0	0	0	0	4	2	18	44	26	14	1	1	0	0	0	**110**
06:45 - 06:59	0	0	0	0	4	17	38	37	27	11	1	0	0	0	0	**135**
07:00 - 07:14	0	0	3	49	60	34	18	4	3	0	0	0	0	0	0	**171**
07:15 - 07:29	0	0	7	55	47	29	16	6	2	0	0	0	0	0	0	**162**
07:30 - 07:44	0	0	0	36	56	35	20	14	4	2	0	0	0	0	0	**167**
07:45 - 07:59	0	0	4	27	42	32	26	27	12	2	1	0	0	0	0	**173**
08:00 - 08:14	0	0	0	0	4	18	42	64	36	14	1	0	0	0	0	**179**
08:15 - 08:29	0	0	0	1	5	24	59	83	33	12	4	1	0	0	0	**222**
08:30 - 08:44	0	0	0	0	4	13	49	78	49	16	1	0	0	0	0	**210**
08:45 - 08:59	0	0	0	0	0	6	44	75	47	20	3	0	2	0	0	**197**
09:00 - 09:14	0	0	0	1	0	10	36	48	43	18	2	1	0	0	0	**159**
09:15 - 09:29	0	0	0	0	0	3	26	54	60	30	3	0	0	0	0	**176**
09:30 - 09:44	0	0	0	0	3	7	15	57	50	14	4	0	1	0	0	**151**
09:45 - 09:59	0	0	0	0	0	7	38	49	44	18	2	3	0	0	0	**161**
10:00 - 10:14	0	0	0	0	0	14	30	58	48	11	1	0	0	0	0	**162**
10:15 - 10:29	0	1	0	0	1	9	34	42	31	15	1	0	0	0	0	**134**
10:30 - 10:44	0	1	0	1	1	7	41	61	49	18	7	0	0	0	0	**186**
10:45 - 10:59	0	0	0	0	1	3	27	68	44	13	5	0	0	0	0	**161**
11:00 - 11:14	0	0	0	1	5	7	28	60	51	16	2	0	0	0	0	**170**
11:15 - 11:29	0	0	1	3	1	10	38	74	44	19	2	1	0	0	1	**194**
11:30 - 11:44	0	0	0	0	1	9	40	56	52	11	2	0	0	0	0	**171**
11:45 - 11:59	0	0	0	2	0	5	42	72	49	15	2	0	0	0	0	**187**
12:00 - 12:14	0	1	1	0	1	14	46	66	45	22	5	0	0	0	0	**201**
12:15 - 12:29	0	0	0	0	3	4	25	48	49	21	4	2	0	0	0	**156**
12:30 - 12:44	0	1	1	1	4	12	53	89	54	10	9	0	0	0	0	**234**

Daily Westbound Speeds (MPH)

Study Date: Tuesday, 09/18/2018
Unit ID: 0186
Location: SW 56TH ST / E OF SW 69TH CT

	1-5	6-10	11-15	16-20	21-25	26-30	31-35	36-40	41-45	46-50	51-55	56-60	61-65	66-70	71-99	Total
12:45 - 12:59	0	1	0	1	2	4	36	78	56	19	7	2	0	0	0	**206**
13:00 - 13:14	0	0	0	1	0	14	38	70	43	19	6	1	0	0	0	**192**
13:15 - 13:29	0	1	1	0	0	16	46	86	43	13	1	0	0	0	0	**207**
13:30 - 13:44	0	0	1	0	1	10	45	92	37	19	2	4	0	0	0	**211**
13:45 - 13:59	0	2	1	1	0	9	46	69	63	10	1	1	0	0	0	**203**
14:00 - 14:14	0	2	2	9	13	40	43	62	30	11	2	0	0	0	0	**214**
14:15 - 14:29	1	0	3	31	68	74	24	13	4	1	0	0	0	0	0	**219**
14:30 - 14:44	11	12	25	63	49	16	9	2	0	0	0	0	0	0	0	**187**
14:45 - 14:59	0	1	2	18	33	43	57	48	15	2	0	0	0	0	0	**219**
15:00 - 15:14	0	1	1	5	21	79	73	75	21	9	2	0	0	0	0	**287**
15:15 - 15:29	0	1	2	6	14	59	92	79	23	13	1	0	0	0	0	**290**
15:30 - 15:44	0	7	5	7	35	65	99	69	20	6	0	0	0	0	0	**313**
15:45 - 15:59	1	4	4	5	18	48	85	105	36	5	2	0	0	0	0	**313**
16:00 - 16:14	1	5	2	3	12	49	117	106	36	4	1	0	0	0	0	**336**
16:15 - 16:29	0	0	2	2	27	62	124	89	31	4	3	1	0	0	0	**345**
16:30 - 16:44	0	4	5	7	32	66	91	82	32	8	3	0	0	0	0	**330**
16:45 - 16:59	2	1	2	14	19	55	127	77	20	3	3	0	0	0	0	**323**
17:00 - 17:14	0	2	5	8	29	68	107	61	27	9	2	0	0	0	0	**318**
17:15 - 17:29	2	8	24	40	44	39	39	21	8	0	0	0	0	0	0	**225**
17:30 - 17:44	5	13	17	23	84	60	34	9	3	0	0	0	0	0	0	**248**
17:45 - 17:59	4	13	17	32	80	58	15	3	1	0	0	0	0	0	0	**223**
18:00 - 18:14	0	5	7	12	25	56	67	62	27	7	1	0	0	0	0	**269**
18:15 - 18:29	0	0	0	0	4	54	113	85	33	11	2	0	1	0	0	**303**
18:30 - 18:44	0	0	0	0	10	22	114	105	37	8	4	0	0	0	0	**300**
18:45 - 18:59	0	0	0	3	14	70	112	87	26	5	0	0	0	0	0	**317**
19:00 - 19:14	0	0	0	0	2	25	98	81	32	11	3	0	0	0	0	**252**
19:15 - 19:29	0	0	0	0	0	29	93	93	43	10	3	1	0	1	0	**273**
19:30 - 19:44	0	0	0	0	1	9	52	111	55	15	6	1	2	0	0	**252**
19:45 - 19:59	0	0	0	0	1	8	72	79	52	14	4	1	0	0	0	**231**
20:00 - 20:14	0	0	0	1	1	6	37	80	49	13	5	2	0	0	0	**194**
20:15 - 20:29	0	0	0	0	0	7	32	58	40	16	2	1	0	0	0	**156**
20:30 - 20:44	0	0	0	0	3	2	23	42	32	22	1	0	1	0	0	**126**
20:45 - 20:59	0	0	0	0	1	6	30	56	37	11	5	3	0	0	0	**149**
21:00 - 21:14	0	0	0	0	0	2	19	49	46	21	2	1	0	0	0	**140**
21:15 - 21:29	0	0	0	0	1	4	15	44	36	11	1	2	0	0	0	**114**
21:30 - 21:44	0	0	0	0	2	4	14	31	36	14	2	3	0	0	0	**106**
21:45 - 21:59	0	0	0	0	1	4	9	24	27	12	3	2	2	0	0	**84**
22:00 - 22:14	0	0	0	0	0	1	3	22	27	15	9	1	0	0	0	**78**
22:15 - 22:29	0	0	0	1	1	4	11	33	36	7	6	2	0	0	0	**101**
22:30 - 22:44	0	0	0	0	2	2	6	19	21	12	2	0	0	0	0	**64**
22:45 - 22:59	0	0	0	0	0	0	2	14	25	7	5	2	0	0	0	**55**
23:00 - 23:14	0	0	0	0	1	2	5	8	17	9	5	2	0	0	0	**49**
23:15 - 23:29	0	0	0	0	0	2	4	12	16	13	2	1	0	0	0	**50**
23:30 - 23:44	0	0	0	0	0	0	6	16	11	11	2	1	1	0	0	**48**
23:45 - 23:59	0	0	0	0	0	1	2	12	8	1	2	1	0	0	0	**27**
Totals	**27**	**87**	**145**	**470**	**902**	**1596**	**3187**	**3959**	**2388**	**839**	**209**	**56**	**10**	**2**	**1**	**13878**
Percent of Total	**0.2**	**0.6**	**1.0**	**3.4**	**6.5**	**11.5**	**23.0**	**28.5**	**17.2**	**6.0**	**1.5**	**0.4**	**0.1**	**0.0**	**0.0**	**100**
Percent of AM	**0.0**	**0.0**	**0.4**	**4.3**	**5.9**	**7.5**	**18.8**	**29.9**	**22.3**	**8.6**	**1.9**	**0.4**	**0.1**	**0.0**	**0.0**	**100**
Percent of PM	**0.3**	**0.9**	**1.3**	**3.0**	**6.8**	**13.2**	**24.7**	**28.0**	**15.1**	**5.0**	**1.3**	**0.4**	**0.1**	**0.0**	**0.0**	**100**

Daily Westbound Speeds (MPH)

Study Date: Tuesday, 09/18/2018
Unit ID: 0186
Location: SW 56TH ST / E OF SW 69TH CT

Standard Deviation:	8.4 MPH	Ten Mile Pace:	31 to 40 MPH	85th Percentile:	44.0 MPH
Mean Speed:	35.8 MPH	Percent in Ten Mile Pace:	51.5%	15th Percentile:	27.4 MPH
Median Speed:	36.7 MPH			90th Percentile:	45.4 MPH
Modal Speed:	38.5 MPH			95th Percentile:	48.5 MPH

Daily Westbound Speeds (MPH)

Study Date: Wednesday, 09/19/2018
Unit ID: 0186
Location: SW 56TH ST / E OF SW 69TH CT

	1-5	6-10	11-15	16-20	21-25	26-30	31-35	36-40	41-45	46-50	51-55	56-60	61-65	66-70	71-99	Total
00:00 - 00:14	0	0	0	0	0	2	4	12	15	3	1	0	0	0	0	**37**
00:15 - 00:29	0	0	0	0	0	2	1	6	6	7	0	1	0	0	0	**23**
00:30 - 00:44	0	0	0	0	0	2	4	11	3	2	1	0	0	0	0	**23**
00:45 - 00:59	0	0	0	0	0	0	2	2	6	4	0	0	0	0	0	**14**
01:00 - 01:14	0	0	0	0	0	0	1	6	1	1	1	0	0	0	0	**10**
01:15 - 01:29	0	0	0	0	0	0	3	2	1	2	1	0	0	0	0	**9**
01:30 - 01:44	0	0	0	0	0	0	4	3	4	1	0	1	0	0	0	**13**
01:45 - 01:59	0	0	0	0	0	1	0	1	2	1	0	0	0	0	0	**5**
02:00 - 02:14	0	0	0	0	0	0	0	2	1	1	0	0	0	0	0	**4**
02:15 - 02:29	0	0	0	0	0	0	1	2	5	0	0	0	0	0	0	**8**
02:30 - 02:44	0	0	0	0	0	1	1	0	2	0	0	1	0	0	0	**5**
02:45 - 02:59	0	0	0	0	0	0	0	0	2	2	0	0	1	0	0	**5**
03:00 - 03:14	0	0	0	0	0	0	4	1	1	1	1	0	0	0	0	**8**
03:15 - 03:29	0	0	0	0	0	0	0	3	1	3	0	0	0	0	0	**7**
03:30 - 03:44	0	0	0	0	0	0	0	0	0	0	0	0	0	0	0	**0**
03:45 - 03:59	0	0	0	0	1	0	1	1	1	0	1	0	0	0	0	**5**
04:00 - 04:14	0	0	0	0	0	0	0	0	1	0	0	1	1	0	0	**3**
04:15 - 04:29	0	0	0	0	0	0	1	2	2	0	0	0	0	0	0	**5**
04:30 - 04:44	0	0	0	0	0	3	0	3	1	1	1	2	0	0	0	**11**
04:45 - 04:59	0	0	0	0	0	0	0	2	3	2	2	0	0	0	0	**9**
05:00 - 05:14	0	0	0	0	0	0	0	2	3	4	1	0	0	0	0	**10**
05:15 - 05:29	0	0	0	0	0	1	1	6	6	4	2	2	0	0	0	**22**
05:30 - 05:44	0	0	0	0	0	0	0	7	7	4	2	1	0	0	0	**21**
05:45 - 05:59	0	0	0	0	0	0	5	6	15	10	2	0	0	1	0	**39**
06:00 - 06:14	0	0	0	0	3	2	6	14	14	2	1	1	0	0	0	**43**
06:15 - 06:29	0	0	0	0	0	3	5	9	14	9	3	0	0	1	0	**44**
06:30 - 06:44	0	0	0	0	2	3	7	13	18	5	5	1	0	0	0	**54**
06:45 - 06:59	0	0	0	0	0	3	13	20	21	13	2	0	0	0	0	**72**
07:00 - 07:14	0	0	0	0	4	6	21	28	18	6	6	0	1	0	0	**90**
07:15 - 07:29	0	0	0	4	9	15	25	29	21	4	0	1	0	1	0	**109**
07:30 - 07:44	0	0	0	11	10	30	35	35	23	6	2	1	0	0	0	**153**
07:45 - 07:59	0	0	0	2	13	18	24	39	18	11	4	0	0	0	0	**129**
08:00 - 08:14	0	0	0	0	1	5	21	44	47	12	4	0	0	0	0	**134**
08:15 - 08:29	0	0	0	0	2	8	21	57	40	14	8	1	0	0	0	**151**
08:30 - 08:44	0	0	0	0	4	7	37	66	48	8	6	0	0	0	0	**176**
08:45 - 08:59	0	0	0	0	0	5	39	41	42	15	5	2	0	0	0	**149**
09:00 - 09:14	0	0	0	0	1	4	34	68	38	8	5	1	0	0	0	**159**
09:15 - 09:29	0	0	0	0	9	29	58	50	20	4	0	0	0	0	0	**170**
09:30 - 09:44	0	0	0	0	0	6	42	52	50	15	2	1	0	0	0	**168**
09:45 - 09:59	0	0	0	0	0	7	36	73	41	9	5	2	0	0	0	**173**
10:00 - 10:14	0	0	0	0	1	3	37	74	38	12	7	0	0	0	0	**172**
10:15 - 10:29	0	0	0	1	0	10	39	59	40	12	3	3	0	0	0	**167**
10:30 - 10:44	0	0	0	0	2	6	38	60	36	16	4	0	1	0	0	**163**
10:45 - 10:59	0	0	0	1	2	11	46	56	38	9	4	0	0	0	0	**167**
11:00 - 11:14	0	1	0	0	0	11	25	65	38	17	2	2	0	0	0	**161**
11:15 - 11:29	0	1	0	0	1	9	26	75	53	20	7	2	0	0	0	**194**
11:30 - 11:44	0	1	1	0	0	11	56	58	38	7	1	1	0	0	0	**174**
11:45 - 11:59	0	0	0	0	1	6	17	48	62	28	5	3	1	0	0	**171**
12:00 - 12:14	0	1	0	2	1	15	54	60	34	13	5	0	0	0	0	**185**
12:15 - 12:29	0	1	0	1	1	19	41	72	66	24	3	0	0	0	1	**229**
12:30 - 12:44	0	3	0	1	1	9	42	108	47	14	2	0	0	0	0	**227**

Daily Westbound Speeds (MPH)

Study Date: Wednesday, 09/19/2018
Unit ID: 0186
Location: SW 56TH ST / E OF SW 69TH CT

	1-5	6-10	11-15	16-20	21-25	26-30	31-35	36-40	41-45	46-50	51-55	56-60	61-65	66-70	71-99	Total
12:45 - 12:59	0	1	1	2	3	9	41	101	38	15	5	1	0	0	0	**217**
13:00 - 13:14	0	0	0	0	1	12	27	78	51	18	3	2	0	0	0	**192**
13:15 - 13:29	0	4	0	0	0	4	25	73	61	23	4	0	0	0	0	**194**
13:30 - 13:44	0	2	2	0	0	5	39	70	72	19	8	2	0	0	0	**219**
13:45 - 13:59	0	2	0	0	4	5	52	97	53	19	3	0	0	0	0	**235**
14:00 - 14:14	0	1	0	1	5	13	78	66	44	8	3	0	0	0	0	**219**
14:15 - 14:29	0	1	0	3	13	33	47	54	35	8	0	1	0	0	0	**195**
14:30 - 14:44	2	0	1	1	11	24	100	60	31	7	2	1	0	0	0	**240**
14:45 - 14:59	0	0	0	1	6	37	86	67	22	7	1	2	0	0	0	**229**
15:00 - 15:14	0	0	0	0	2	45	105	94	53	6	1	0	0	0	0	**306**
15:15 - 15:29	0	0	0	1	4	19	78	89	55	9	2	0	0	0	0	**257**
15:30 - 15:44	1	0	1	2	14	57	54	93	52	12	2	0	0	0	0	**288**
15:45 - 15:59	0	3	1	3	10	44	66	125	47	14	4	0	0	0	0	**317**
16:00 - 16:14	0	0	0	0	1	19	74	113	53	21	5	0	0	0	1	**287**
16:15 - 16:29	0	7	2	2	9	39	88	103	42	8	1	0	0	0	0	**301**
16:30 - 16:44	0	2	4	2	6	31	73	102	59	20	5	0	0	0	0	**304**
16:45 - 16:59	0	2	1	0	2	32	110	97	44	11	3	1	1	0	0	**304**
17:00 - 17:14	0	1	0	0	11	31	99	103	44	13	3	1	0	0	0	**306**
17:15 - 17:29	0	0	1	0	1	43	109	96	52	11	2	0	0	0	0	**315**
17:30 - 17:44	0	1	0	1	4	43	111	93	64	6	3	1	0	0	0	**327**
17:45 - 17:59	0	0	0	1	4	31	89	105	45	16	2	1	0	0	0	**294**
18:00 - 18:14	1	2	0	3	15	49	88	94	43	1	2	0	0	0	0	**298**
18:15 - 18:29	0	0	0	0	11	47	109	92	52	6	3	0	0	0	0	**320**
18:30 - 18:44	0	2	0	2	7	41	105	104	52	6	2	0	0	0	0	**321**
18:45 - 18:59	0	0	0	3	5	44	85	73	28	8	3	0	0	0	0	**249**
19:00 - 19:14	0	0	0	0	0	13	61	85	49	18	3	1	0	0	0	**230**
19:15 - 19:29	0	0	0	0	1	9	70	80	45	7	9	1	1	0	0	**223**
19:30 - 19:44	0	0	0	2	0	11	49	96	48	13	2	3	0	0	0	**224**
19:45 - 19:59	0	1	0	0	0	9	40	75	70	22	5	1	0	0	0	**223**
20:00 - 20:14	0	0	0	0	0	8	27	64	52	14	5	0	0	0	0	**170**
20:15 - 20:29	0	0	0	0	3	4	34	70	53	15	0	1	2	0	0	**182**
20:30 - 20:44	0	0	0	0	1	6	26	47	32	15	1	1	0	0	0	**129**
20:45 - 20:59	0	0	0	0	0	2	16	52	43	14	5	0	0	0	0	**132**
21:00 - 21:14	0	0	0	0	1	0	17	42	36	20	3	5	0	0	0	**124**
21:15 - 21:29	0	0	0	0	1	5	15	46	48	13	4	1	0	0	0	**133**
21:30 - 21:44	0	0	0	0	0	1	8	51	32	14	1	1	0	0	0	**108**
21:45 - 21:59	0	0	0	0	0	4	14	20	30	9	5	1	0	0	0	**83**
22:00 - 22:14	0	0	0	0	0	0	5	13	33	16	6	2	0	0	1	**76**
22:15 - 22:29	0	0	0	0	0	1	5	21	23	12	1	1	0	0	0	**64**
22:30 - 22:44	0	0	0	0	0	0	2	19	15	11	7	0	1	0	1	**56**
22:45 - 22:59	0	0	0	0	1	1	5	12	11	10	3	2	0	0	0	**45**
23:00 - 23:14	0	0	0	0	0	0	6	10	15	14	1	2	0	0	0	**48**
23:15 - 23:29	0	0	0	0	0	0	3	13	27	4	3	0	0	0	0	**50**
23:30 - 23:44	0	0	0	0	0	0	3	10	18	5	3	0	0	0	0	**39**
23:45 - 23:59	0	0	0	0	0	2	6	7	9	7	4	0	0	0	0	**35**
Totals	**4**	**40**	**15**	**53**	**226**	**1106**	**3228**	**4528**	**2933**	**911**	**260**	**67**	**10**	**3**	**4**	**13388**
Percent of Total	**0.0**	**0.3**	**0.1**	**0.4**	**1.7**	**8.3**	**24.1**	**33.8**	**21.9**	**6.8**	**1.9**	**0.5**	**0.1**	**0.0**	**0.0**	**100**
Percent of AM	**0.0**	**0.1**	**0.0**	**0.5**	**1.8**	**6.3**	**20.4**	**33.3**	**24.9**	**8.7**	**2.9**	**0.9**	**0.1**	**0.1**	**0.0**	**100**
Percent of PM	**0.0**	**0.4**	**0.1**	**0.3**	**1.6**	**9.0**	**25.5**	**34.0**	**20.8**	**6.1**	**1.6**	**0.4**	**0.1**	**0.0**	**0.0**	**100**

Daily Westbound Speeds (MPH)

Study Date: Wednesday, 09/19/2018
Unit ID: 0186
Location: SW 56TH ST / E OF SW 69TH CT

Standard Deviation:	6.7 MPH	Ten Mile Pace:	31 to 40 MPH	85th Percentile:	44.7 MPH
Mean Speed:	38.2 MPH	Percent in Ten Mile Pace:	57.9%		
Median Speed:	38.2 MPH			15th Percentile:	31.9 MPH
Modal Speed:	38.5 MPH			90th Percentile:	45.9 MPH
				95th Percentile:	49.2 MPH

Daily Westbound Speeds (MPH)

Study Date: Thursday, 09/20/2018
Unit ID: 0186
Location: SW 56TH ST / E OF SW 69TH CT

	1-5	6-10	11-15	16-20	21-25	26-30	31-35	36-40	41-45	46-50	51-55	56-60	61-65	66-70	71-99	Total
00:00 - 00:14	0	0	0	0	0	2	1	4	7	4	2	0	0	0	0	**20**
00:15 - 00:29	0	0	0	0	0	1	2	7	5	6	0	0	0	0	1	**22**
00:30 - 00:44	0	0	0	0	0	0	1	6	3	2	1	0	1	0	0	**14**
00:45 - 00:59	0	0	0	0	0	0	1	5	9	2	2	0	0	0	0	**19**
01:00 - 01:14	0	0	0	0	0	1	2	2	6	3	0	0	0	0	0	**14**
01:15 - 01:29	0	0	0	0	0	0	2	0	8	1	0	0	0	0	0	**11**
01:30 - 01:44	0	0	0	0	0	1	3	4	4	1	2	0	0	0	0	**15**
01:45 - 01:59	0	0	0	0	0	0	1	3	2	0	1	1	0	0	0	**8**
02:00 - 02:14	0	0	0	0	0	0	0	2	1	0	0	0	0	0	0	**3**
02:15 - 02:29	0	0	0	0	1	0	1	1	3	0	0	0	0	0	0	**6**
02:30 - 02:44	0	0	0	0	0	0	0	1	2	0	0	0	0	0	0	**3**
02:45 - 02:59	0	0	0	0	0	0	1	2	0	0	1	0	0	0	0	**4**
03:00 - 03:14	0	0	0	0	0	1	0	2	2	1	1	0	0	0	0	**7**
03:15 - 03:29	0	0	0	0	0	1	2	0	0	0	0	0	0	0	0	**3**
03:30 - 03:44	0	0	0	0	1	0	0	2	3	2	1	1	0	0	0	**10**
03:45 - 03:59	0	0	0	0	0	0	0	1	2	2	1	0	0	0	0	**6**
04:00 - 04:14	0	0	0	0	0	3	0	0	2	0	0	2	0	0	0	**7**
04:15 - 04:29	0	0	0	0	0	0	0	1	4	0	1	0	1	0	0	**7**
04:30 - 04:44	0	0	0	0	0	0	1	1	3	2	1	1	0	0	0	**9**
04:45 - 04:59	0	0	0	0	0	0	0	2	2	7	0	0	0	0	0	**11**
05:00 - 05:14	0	0	0	0	0	0	2	4	5	6	1	1	0	0	0	**19**
05:15 - 05:29	0	0	0	0	0	0	0	8	4	4	2	1	0	0	0	**19**
05:30 - 05:44	0	0	0	0	1	0	1	5	4	5	2	0	0	0	0	**18**
05:45 - 05:59	0	0	0	0	0	2	2	9	14	6	1	1	1	0	0	**36**
06:00 - 06:14	0	0	0	0	1	3	7	11	21	12	11	3	1	0	0	**70**
06:15 - 06:29	0	0	0	0	0	2	7	22	25	19	8	0	1	0	0	**84**
06:30 - 06:44	0	0	0	0	0	9	15	34	21	12	4	2	0	0	0	**97**
06:45 - 06:59	0	0	0	1	5	21	27	43	20	9	3	1	0	0	0	**130**
07:00 - 07:14	0	0	4	39	44	34	24	16	5	2	1	0	0	0	0	**169**
07:15 - 07:29	0	0	3	67	54	21	19	10	1	2	0	0	0	0	0	**177**
07:30 - 07:44	0	0	7	26	43	36	26	12	2	0	1	0	0	0	0	**153**
07:45 - 07:59	0	0	1	26	44	26	30	26	10	5	0	1	1	0	0	**170**
08:00 - 08:14	0	0	0	0	1	20	72	61	30	10	6	0	0	0	0	**200**
08:15 - 08:29	0	0	0	0	1	19	57	81	51	11	3	1	0	0	0	**224**
08:30 - 08:44	0	1	0	0	3	19	60	81	36	17	4	0	0	0	0	**221**
08:45 - 08:59	0	0	0	0	1	3	23	58	46	21	7	1	0	0	0	**160**
09:00 - 09:14	0	0	0	0	1	5	22	56	43	18	5	2	0	0	0	**152**
09:15 - 09:29	0	0	0	0	2	9	25	42	45	30	3	0	0	0	0	**156**
09:30 - 09:44	0	0	0	0	0	7	27	57	39	19	5	1	1	0	0	**156**
09:45 - 09:59	0	0	0	0	2	5	34	55	37	24	4	2	0	0	0	**163**
10:00 - 10:14	0	0	0	0	0	7	32	53	39	11	3	1	0	0	0	**146**
10:15 - 10:29	0	0	0	0	2	9	38	64	34	13	2	0	0	0	0	**162**
10:30 - 10:44	0	0	0	0	0	6	18	53	33	18	4	0	0	0	0	**132**
10:45 - 10:59	0	0	0	0	4	17	47	54	28	10	3	1	0	0	0	**164**
11:00 - 11:14	0	0	0	0	4	8	38	63	41	15	4	2	0	0	0	**175**
11:15 - 11:29	0	0	0	1	5	9	51	60	40	8	3	0	0	0	0	**177**
11:30 - 11:44	0	0	0	0	1	5	43	81	44	18	2	1	0	0	0	**195**
11:45 - 11:59	0	0	0	1	4	8	40	57	42	14	8	2	0	0	0	**176**
12:00 - 12:14	0	0	0	2	0	9	42	84	32	14	1	0	1	0	0	**185**
12:15 - 12:29	0	0	1	1	2	11	42	85	48	15	5	3	1	0	0	**214**
12:30 - 12:44	0	0	0	2	3	24	78	72	33	10	2	0	0	0	0	**224**

Daily Westbound Speeds (MPH)

Study Date: Thursday, 09/20/2018
Unit ID: 0186
Location: SW 56TH ST / E OF SW 69TH CT

	1-5	6-10	11-15	16-20	21-25	26-30	31-35	36-40	41-45	46-50	51-55	56-60	61-65	66-70	71-99	Total
12:45 - 12:59	0	0	0	1	3	14	60	84	43	10	1	2	0	0	0	**218**
13:00 - 13:14	0	0	0	7	12	11	53	53	30	15	7	2	0	0	0	**190**
13:15 - 13:29	0	0	0	0	4	11	47	69	45	25	5	1	1	0	0	**208**
13:30 - 13:44	0	0	0	0	7	15	74	69	41	8	5	0	0	0	0	**219**
13:45 - 13:59	0	0	1	0	1	22	63	70	38	17	2	1	0	0	0	**215**
14:00 - 14:14	0	0	0	10	27	50	46	36	31	5	0	0	0	0	0	**205**
14:15 - 14:29	0	1	1	38	52	76	65	28	8	1	0	1	0	0	0	**271**
14:30 - 14:44	1	15	25	71	42	21	2	0	0	0	0	0	0	0	0	**177**
14:45 - 14:59	2	26	29	23	5	0	0	0	0	0	0	0	0	1	0	**86**
15:00 - 15:14	2	1	1	0	7	43	73	53	14	4	1	0	0	0	0	**199**
15:15 - 15:29	0	0	7	12	36	73	108	80	11	1	1	0	0	0	0	**329**
15:30 - 15:44	0	0	0	5	22	52	101	89	45	8	1	0	0	0	0	**323**
15:45 - 15:59	0	0	1	3	10	40	100	115	51	11	0	1	0	0	0	**332**
16:00 - 16:14	0	0	1	1	19	57	100	86	45	8	2	0	0	0	0	**319**
16:15 - 16:29	0	3	5	16	22	54	126	87	29	9	1	0	0	0	0	**352**
16:30 - 16:44	0	2	4	13	25	66	122	75	20	8	0	0	0	0	0	**335**
16:45 - 16:59	0	0	5	1	28	78	98	80	20	2	0	0	0	0	0	**312**
17:00 - 17:14	0	0	1	7	36	76	92	77	30	4	3	0	0	0	0	**326**
17:15 - 17:29	7	13	17	20	57	21	4	0	0	0	0	0	0	0	0	**139**
17:30 - 17:44	1	3	6	16	28	41	94	78	28	5	0	0	0	0	0	**300**
17:45 - 17:59	3	14	8	17	27	62	68	34	8	7	0	0	0	0	1	**249**
18:00 - 18:14	0	0	0	1	16	56	100	72	33	16	2	0	0	0	0	**296**
18:15 - 18:29	0	0	0	1	2	56	88	110	47	7	1	1	0	0	0	**313**
18:30 - 18:44	0	0	0	0	0	29	116	78	31	9	2	1	0	0	0	**266**
18:45 - 18:59	0	0	0	0	2	21	87	65	59	24	3	1	0	0	0	**262**
19:00 - 19:14	0	0	0	0	0	27	93	77	38	16	5	0	0	0	0	**256**
19:15 - 19:29	0	0	0	0	0	7	59	89	51	18	3	2	0	0	0	**229**
19:30 - 19:44	0	0	0	0	3	16	46	80	58	24	9	2	0	0	0	**238**
19:45 - 19:59	0	0	0	0	2	11	38	83	61	26	5	4	0	0	1	**231**
20:00 - 20:14	0	0	0	0	4	13	51	84	52	14	2	0	0	0	0	**220**
20:15 - 20:29	0	0	0	0	0	11	61	79	48	22	0	1	1	0	0	**223**
20:30 - 20:44	0	0	0	0	1	0	22	59	42	17	4	2	0	0	0	**147**
20:45 - 20:59	0	0	0	0	1	0	24	59	43	16	3	1	0	0	0	**147**
21:00 - 21:14	0	0	0	0	0	2	24	46	36	8	2	0	0	0	0	**118**
21:15 - 21:29	0	0	0	0	0	3	17	38	42	16	7	1	0	0	0	**124**
21:30 - 21:44	0	0	0	0	0	2	16	33	40	22	1	2	2	0	0	**118**
21:45 - 21:59	0	0	0	0	0	0	10	24	40	20	3	0	0	0	0	**97**
22:00 - 22:14	0	0	0	1	0	3	5	26	32	11	4	5	0	0	0	**87**
22:15 - 22:29	0	0	0	0	0	2	10	14	31	21	3	1	0	0	0	**82**
22:30 - 22:44	0	0	0	0	0	3	5	22	21	8	4	0	1	0	0	**64**
22:45 - 22:59	0	0	0	0	0	2	6	15	20	8	0	2	0	0	0	**53**
23:00 - 23:14	0	0	0	0	0	2	5	24	17	21	6	0	0	0	0	**75**
23:15 - 23:29	0	0	0	0	0	3	7	12	13	12	6	0	0	0	0	**53**
23:30 - 23:44	0	0	0	0	0	0	6	18	20	14	2	0	0	0	0	**60**
23:45 - 23:59	0	0	0	0	1	1	1	9	9	9	2	0	0	0	0	**32**
Totals	**16**	**79**	**128**	**430**	**732**	**1517**	**3360**	**3942**	**2362**	**938**	**230**	**66**	**14**	**1**	**3**	**13818**
Percent of Total	**0.1**	**0.6**	**0.9**	**3.1**	**5.3**	**11.0**	**24.3**	**28.5**	**17.1**	**6.8**	**1.7**	**0.5**	**0.1**	**0.0**	**0.0**	**100**
Percent of AM	**0.0**	**0.0**	**0.4**	**3.9**	**5.5**	**7.8**	**19.6**	**29.8**	**20.2**	**9.1**	**2.8**	**0.7**	**0.2**	**0.0**	**0.0**	**100**
Percent of PM	**0.2**	**0.8**	**1.2**	**2.8**	**5.2**	**12.3**	**26.3**	**28.0**	**15.8**	**5.8**	**1.2**	**0.4**	**0.1**	**0.0**	**0.0**	**100**

Daily Westbound Speeds (MPH)

Study Date: Thursday, 09/20/2018
Unit ID: 0186
Location: SW 56TH ST / E OF SW 69TH CT

Standard Deviation:	8.3 MPH	Ten Mile Pace:	31 to 40 MPH	85th Percentile:	44.3 MPH
Mean Speed:	36.2 MPH	Percent in Ten Mile Pace:	52.8%	15th Percentile:	28.3 MPH
Median Speed:	36.8 MPH			90th Percentile:	45.7 MPH
Modal Speed:	38.5 MPH			95th Percentile:	49.0 MPH

Daily Eastbound Speeds (MPH)

Study Date: Tuesday, 10/16/2018
Unit ID: 0181
Location: SW 40TH ST / E OF SW 70TH AVE

	1-5	6-10	11-15	16-20	21-25	26-30	31-35	36-40	41-45	46-50	51-55	56-60	61-65	66-70	71-99	Total
00:00 - 00:14	0	0	0	0	0	0	9	15	13	9	4	1	0	0	0	**51**
00:15 - 00:29	0	0	0	0	1	1	6	9	20	13	2	1	2	0	0	**55**
00:30 - 00:44	0	0	0	0	1	1	10	9	11	4	1	1	0	1	0	**39**
00:45 - 00:59	0	0	0	0	0	1	3	11	12	5	2	1	1	0	0	**36**
01:00 - 01:14	0	0	0	0	0	4	4	6	14	8	2	1	0	1	0	**40**
01:15 - 01:29	0	0	0	0	1	1	3	3	10	5	1	0	0	0	0	**24**
01:30 - 01:44	0	0	0	0	0	2	2	4	6	2	1	0	0	0	0	**17**
01:45 - 01:59	0	0	0	0	1	0	3	6	5	6	1	0	0	1	0	**23**
02:00 - 02:14	0	0	0	0	0	2	0	4	3	3	1	1	0	0	0	**14**
02:15 - 02:29	0	0	0	0	0	1	2	3	4	5	0	1	0	0	0	**16**
02:30 - 02:44	0	0	0	0	0	0	0	5	7	1	2	1	0	0	0	**16**
02:45 - 02:59	0	0	0	0	0	0	2	3	6	2	0	0	0	0	0	**13**
03:00 - 03:14	0	0	0	0	0	1	1	6	4	2	1	0	0	0	0	**15**
03:15 - 03:29	0	0	0	0	0	0	2	5	6	2	1	0	0	0	0	**16**
03:30 - 03:44	0	0	0	0	0	0	5	4	7	4	0	0	0	0	0	**20**
03:45 - 03:59	0	0	0	0	0	1	1	4	3	6	1	0	0	0	0	**16**
04:00 - 04:14	0	0	0	0	1	3	4	7	7	8	2	0	0	0	0	**32**
04:15 - 04:29	0	0	0	0	0	0	2	4	9	10	3	0	0	0	0	**28**
04:30 - 04:44	0	0	0	0	2	2	4	8	16	14	3	0	0	0	0	**49**
04:45 - 04:59	0	0	0	0	0	1	1	8	16	11	9	0	0	0	0	**46**
05:00 - 05:14	0	0	0	1	0	1	5	16	12	11	9	5	1	1	0	**62**
05:15 - 05:29	0	0	0	0	2	2	7	23	39	31	13	7	0	0	0	**124**
05:30 - 05:44	0	0	0	0	2	4	9	32	89	42	22	3	4	0	0	**207**
05:45 - 05:59	0	0	0	0	1	4	12	34	68	50	20	7	3	0	0	**199**
06:00 - 06:14	0	0	0	2	5	7	26	69	82	42	32	9	5	0	0	**279**
06:15 - 06:29	0	0	0	0	4	22	57	124	94	54	10	1	1	0	0	**367**
06:30 - 06:44	0	0	0	1	14	31	79	142	102	33	8	1	0	0	0	**411**
06:45 - 06:59	0	0	3	4	22	75	104	94	47	10	2	1	0	0	0	**362**
07:00 - 07:14	0	1	2	10	36	75	104	90	32	6	1	1	0	0	1	**359**
07:15 - 07:29	0	1	11	16	27	90	109	45	34	4	1	3	0	0	0	**341**
07:30 - 07:44	0	2	1	17	58	98	87	33	14	3	0	1	0	0	0	**314**
07:45 - 07:59	0	4	15	33	65	87	58	24	13	4	0	2	0	0	3	**308**
08:00 - 08:14	1	8	14	24	69	61	60	34	8	1	0	0	0	0	0	**280**
08:15 - 08:29	3	9	34	43	44	41	27	26	5	3	0	0	0	1	0	**236**
08:30 - 08:44	0	4	6	20	64	75	84	55	20	4	0	0	1	0	0	**333**
08:45 - 08:59	0	3	4	20	39	97	141	81	27	3	1	0	0	0	1	**417**
09:00 - 09:14	0	1	6	13	30	79	98	83	24	6	0	0	0	0	0	**340**
09:15 - 09:29	0	0	0	7	30	138	162	80	23	3	1	0	0	0	0	**444**
09:30 - 09:44	0	0	0	4	17	84	117	74	31	4	2	0	0	0	0	**333**
09:45 - 09:59	0	0	1	6	42	143	96	56	22	6	2	0	0	0	1	**375**
10:00 - 10:14	0	0	0	0	17	57	121	102	37	7	0	0	0	0	0	**341**
10:15 - 10:29	0	0	0	1	11	42	80	86	49	11	3	1	0	0	0	**284**
10:30 - 10:44	0	1	1	3	4	54	91	94	49	9	0	0	0	0	0	**306**
10:45 - 10:59	0	0	0	2	15	42	118	99	54	13	1	0	0	0	0	**344**
11:00 - 11:14	0	0	0	2	16	62	68	63	34	11	1	0	0	0	0	**257**
11:15 - 11:29	0	0	0	5	8	60	147	115	43	18	4	0	0	0	0	**400**
11:30 - 11:44	0	0	1	0	37	52	117	79	35	14	0	0	0	0	0	**335**
11:45 - 11:59	0	1	0	4	17	32	65	116	76	19	4	0	0	0	0	**334**
12:00 - 12:14	1	0	2	8	33	93	134	59	18	12	0	0	0	0	0	**360**
12:15 - 12:29	0	0	0	8	38	102	110	76	34	11	1	0	0	0	0	**380**
12:30 - 12:44	0	0	2	6	51	89	110	61	42	9	1	2	0	1	0	**374**

Daily Eastbound Speeds (MPH)

Study Date: Tuesday, 10/16/2018
Unit ID: 0181
Location: SW 40TH ST / E OF SW 70TH AVE

	1-5	6-10	11-15	16-20	21-25	26-30	31-35	36-40	41-45	46-50	51-55	56-60	61-65	66-70	71-99	Total
12:45 - 12:59	0	0	1	6	14	67	114	76	33	12	6	0	0	0	1	**330**
13:00 - 13:14	0	0	0	2	34	68	135	72	27	8	3	0	0	0	1	**350**
13:15 - 13:29	0	1	2	7	23	83	127	95	34	13	2	0	0	0	0	**387**
13:30 - 13:44	0	0	1	5	27	70	119	92	42	14	7	1	0	0	0	**378**
13:45 - 13:59	2	1	4	4	28	75	97	82	48	22	3	0	0	0	0	**366**
14:00 - 14:14	0	0	0	3	17	66	135	105	54	11	7	2	0	0	1	**401**
14:15 - 14:29	0	0	0	5	29	55	119	91	50	14	1	0	0	0	0	**364**
14:30 - 14:44	0	1	0	2	14	53	80	89	49	22	4	1	0	0	0	**315**
14:45 - 14:59	0	0	0	0	10	35	111	78	47	13	2	0	0	0	0	**296**
15:00 - 15:14	0	0	3	1	16	43	108	104	62	21	3	2	1	2	0	**366**
15:15 - 15:29	0	0	1	4	23	37	94	98	51	17	0	0	1	0	0	**326**
15:30 - 15:44	0	1	0	3	20	58	99	110	59	10	3	0	1	0	1	**365**
15:45 - 15:59	0	2	2	3	21	58	102	114	55	13	3	0	0	0	0	**373**
16:00 - 16:14	0	0	3	3	25	62	76	113	35	5	3	1	1	0	1	**328**
16:15 - 16:29	0	0	0	2	8	56	117	119	60	21	2	0	0	0	0	**385**
16:30 - 16:44	0	0	0	1	7	43	74	121	61	27	9	0	0	0	0	**343**
16:45 - 16:59	0	1	0	1	11	21	82	105	70	31	6	1	0	0	0	**329**
17:00 - 17:14	0	0	0	1	18	57	83	109	60	21	2	0	0	0	0	**351**
17:15 - 17:29	0	0	0	6	29	33	77	92	84	18	3	1	0	0	1	**344**
17:30 - 17:44	0	1	0	4	11	49	115	120	59	23	5	1	0	0	0	**388**
17:45 - 17:59	0	0	0	0	7	36	99	102	59	18	4	1	0	0	0	**326**
18:00 - 18:14	0	1	1	3	11	49	89	89	71	15	5	1	0	0	0	**335**
18:15 - 18:29	0	0	0	1	8	42	84	119	88	13	3	0	0	0	0	**358**
18:30 - 18:44	0	0	0	1	9	33	74	96	78	29	10	4	0	0	0	**334**
18:45 - 18:59	0	0	1	3	14	39	87	82	59	25	3	0	0	0	0	**313**
19:00 - 19:14	0	0	0	1	9	32	90	104	82	20	2	0	1	0	0	**341**
19:15 - 19:29	0	0	0	6	25	45	82	108	46	12	0	0	0	0	0	**324**
19:30 - 19:44	0	0	1	2	5	22	63	92	62	21	6	3	1	0	1	**279**
19:45 - 19:59	0	0	0	2	6	23	61	118	60	27	7	3	0	0	1	**308**
20:00 - 20:14	0	0	0	0	7	25	66	74	41	26	4	2	0	0	0	**245**
20:15 - 20:29	0	0	0	1	1	25	65	69	48	15	7	3	0	0	0	**234**
20:30 - 20:44	0	0	0	1	6	24	49	73	49	24	7	1	0	0	0	**234**
20:45 - 20:59	0	0	0	0	6	6	40	60	64	20	10	2	0	0	0	**208**
21:00 - 21:14	0	1	2	0	2	15	30	55	48	28	7	5	0	0	0	**193**
21:15 - 21:29	0	0	0	1	0	17	35	59	44	31	6	1	0	0	1	**195**
21:30 - 21:44	0	0	0	0	7	15	45	61	42	29	13	0	2	0	2	**216**
21:45 - 21:59	0	0	1	0	6	8	21	63	53	24	14	3	0	0	1	**194**
22:00 - 22:14	0	0	0	2	0	15	34	44	33	17	6	3	0	0	0	**154**
22:15 - 22:29	0	0	0	0	3	15	25	38	36	27	10	2	0	0	1	**157**
22:30 - 22:44	0	0	0	0	6	10	20	38	36	16	10	3	1	0	1	**141**
22:45 - 22:59	0	0	0	1	4	4	10	35	41	21	9	2	2	1	0	**130**
23:00 - 23:14	0	0	0	0	0	4	14	35	22	18	7	4	0	0	0	**104**
23:15 - 23:29	0	0	0	0	2	4	11	16	26	19	2	2	0	0	0	**82**
23:30 - 23:44	0	0	0	1	2	2	16	14	27	14	2	0	0	1	0	**79**
23:45 - 23:59	0	0	0	0	0	3	11	17	16	12	4	0	0	0	0	**63**
Totals	**7**	**45**	**126**	**349**	**1356**	**3522**	**5952**	**5935**	**3707**	**1431**	**408**	**107**	**29**	**10**	**20**	**23004**
Percent of Total	**0.0**	**0.2**	**0.5**	**1.5**	**5.9**	**15.3**	**25.9**	**25.8**	**16.1**	**6.2**	**1.8**	**0.5**	**0.1**	**0.0**	**0.1**	**100**
Percent of AM	**0.0**	**0.4**	**1.1**	**2.6**	**7.6**	**17.7**	**25.0**	**22.6**	**14.5**	**5.9**	**1.9**	**0.5**	**0.2**	**0.1**	**0.1**	**100**
Percent of PM	**0.0**	**0.1**	**0.2**	**0.8**	**4.8**	**13.7**	**26.5**	**27.9**	**17.2**	**6.5**	**1.7**	**0.4**	**0.1**	**0.0**	**0.1**	**100**

Daily Eastbound Speeds (MPH)

Study Date: Tuesday, 10/16/2018
Unit ID: 0181
Location: SW 40TH ST / E OF SW 70TH AVE

Standard Deviation:	7.9 MPH	Ten Mile Pace:	31 to 40 MPH	85th Percentile:	44.0 MPH
Mean Speed:	36.2 MPH	Percent in Ten Mile Pace:	51.7%	15th Percentile:	28.2 MPH
Median Speed:	36.1 MPH			90th Percentile:	45.6 MPH
Modal Speed:	33.5 MPH			95th Percentile:	49.0 MPH

Daily Eastbound Speeds (MPH)

Study Date: Wednesday, 10/17/2018
Unit ID: 0181
Location: SW 40TH ST / E OF SW 70TH AVE

	1-5	6-10	11-15	16-20	21-25	26-30	31-35	36-40	41-45	46-50	51-55	56-60	61-65	66-70	71-99	Total
00:00 - 00:14	0	0	0	0	0	2	4	21	12	6	2	1	1	0	0	**49**
00:15 - 00:29	0	0	0	0	0	2	4	8	14	6	2	3	0	0	0	**39**
00:30 - 00:44	0	0	0	0	0	3	8	12	18	7	8	0	0	0	0	**56**
00:45 - 00:59	0	0	0	0	1	0	13	11	9	6	2	0	0	0	0	**42**
01:00 - 01:14	0	0	0	0	0	0	6	11	4	7	1	0	0	0	0	**29**
01:15 - 01:29	0	0	0	0	0	2	6	11	9	6	1	0	0	0	0	**35**
01:30 - 01:44	0	0	0	0	0	1	4	4	5	2	5	1	0	0	0	**22**
01:45 - 01:59	0	0	0	0	0	0	1	6	8	6	3	0	0	0	0	**24**
02:00 - 02:14	0	0	0	0	0	1	1	4	3	1	1	0	0	1	0	**12**
02:15 - 02:29	0	0	0	0	0	1	2	3	3	3	0	0	1	0	0	**13**
02:30 - 02:44	0	0	0	1	0	1	2	3	2	3	0	0	0	0	0	**12**
02:45 - 02:59	0	0	0	0	1	1	1	4	4	1	0	0	0	0	0	**12**
03:00 - 03:14	0	0	0	0	0	0	2	3	9	6	1	0	0	0	0	**21**
03:15 - 03:29	0	0	0	0	0	0	2	5	3	4	1	0	0	0	0	**15**
03:30 - 03:44	0	0	0	0	0	0	1	5	6	3	0	0	0	0	0	**15**
03:45 - 03:59	0	0	0	0	0	0	2	4	4	10	4	0	0	0	0	**24**
04:00 - 04:14	0	0	0	0	0	0	4	7	5	5	3	0	0	0	0	**24**
04:15 - 04:29	0	0	0	0	0	0	4	5	9	7	2	3	1	1	0	**32**
04:30 - 04:44	0	0	0	0	0	1	4	8	12	17	9	1	0	0	0	**52**
04:45 - 04:59	0	0	0	1	1	1	0	9	19	15	12	2	0	0	0	**60**
05:00 - 05:14	0	0	0	0	0	2	4	10	17	23	12	4	1	0	0	**73**
05:15 - 05:29	0	0	0	0	1	3	5	23	39	41	12	3	2	0	0	**129**
05:30 - 05:44	0	0	1	0	1	2	8	32	55	47	19	10	4	2	1	**182**
05:45 - 05:59	0	0	0	0	0	5	20	35	64	56	31	10	0	0	0	**221**
06:00 - 06:14	1	0	0	0	5	9	30	62	77	60	35	5	2	0	0	**286**
06:15 - 06:29	0	1	0	0	3	11	20	89	121	65	20	8	3	0	0	**341**
06:30 - 06:44	0	1	0	1	10	27	82	127	93	57	5	3	0	0	0	**406**
06:45 - 06:59	1	4	2	5	11	25	65	96	51	17	3	1	0	0	0	**281**
07:00 - 07:14	0	2	0	7	19	74	97	63	36	12	3	0	0	2	1	**316**
07:15 - 07:29	4	13	6	10	37	73	103	56	13	5	5	0	0	0	0	**325**
07:30 - 07:44	0	2	7	12	22	71	90	85	35	7	0	0	0	0	2	**333**
07:45 - 07:59	1	4	2	11	36	67	132	73	18	2	3	0	0	1	1	**351**
08:00 - 08:14	2	2	7	12	30	104	147	82	30	13	4	0	0	0	0	**433**
08:15 - 08:29	0	1	3	8	32	106	159	86	31	13	4	1	1	0	0	**445**
08:30 - 08:44	0	0	1	5	16	54	97	62	25	11	5	0	0	0	0	**276**
08:45 - 08:59	0	0	7	14	24	73	93	58	27	9	1	1	1	0	1	**309**
09:00 - 09:14	0	5	9	9	25	58	128	109	61	13	5	2	0	1	0	**425**
09:15 - 09:29	0	1	5	17	31	84	97	67	28	9	3	1	0	0	0	**343**
09:30 - 09:44	0	0	3	5	17	63	126	97	39	10	2	1	1	0	0	**364**
09:45 - 09:59	0	0	1	2	24	78	96	96	27	11	3	0	0	0	0	**338**
10:00 - 10:14	0	1	3	6	19	79	112	87	38	13	4	0	0	0	1	**363**
10:15 - 10:29	0	1	0	6	12	67	95	89	40	20	0	0	0	1	0	**331**
10:30 - 10:44	0	0	1	3	19	61	133	71	35	8	3	0	0	0	0	**334**
10:45 - 10:59	0	0	0	2	14	56	116	80	45	15	0	0	0	0	0	**328**
11:00 - 11:14	0	0	0	1	16	65	117	92	33	9	2	0	0	0	0	**335**
11:15 - 11:29	2	2	1	5	15	59	92	94	60	13	1	0	0	0	1	**345**
11:30 - 11:44	1	0	0	6	24	63	112	94	38	12	1	0	0	0	1	**352**
11:45 - 11:59	0	0	0	5	33	78	142	68	23	4	0	0	0	0	1	**354**
12:00 - 12:14	0	1	0	7	31	51	100	89	33	8	2	0	1	0	0	**323**
12:15 - 12:29	7	1	3	4	35	60	81	81	32	10	1	0	0	0	1	**316**
12:30 - 12:44	0	0	0	3	25	66	104	85	28	13	2	0	0	0	0	**326**

Daily Eastbound Speeds (MPH)

Study Date: Wednesday, 10/17/2018
Unit ID: 0181
Location: SW 40TH ST / E OF SW 70TH AVE

	1-5	6-10	11-15	16-20	21-25	26-30	31-35	36-40	41-45	46-50	51-55	56-60	61-65	66-70	71-99	Total
12:45 - 12:59	0	0	1	1	21	67	115	106	42	9	2	0	0	0	0	**364**
13:00 - 13:14	2	1	0	6	39	79	113	67	32	13	0	0	0	0	0	**352**
13:15 - 13:29	1	0	0	4	20	57	72	83	33	16	2	1	0	0	0	**289**
13:30 - 13:44	0	2	1	2	20	49	98	81	35	18	7	0	0	0	0	**313**
13:45 - 13:59	0	0	0	4	19	58	88	59	35	7	1	0	0	0	0	**271**
14:00 - 14:14	0	0	2	6	14	57	111	90	38	9	3	0	0	0	0	**330**
14:15 - 14:29	0	0	0	3	15	43	65	68	43	15	3	0	0	0	0	**255**
14:30 - 14:44	0	0	1	2	21	74	91	85	43	8	3	0	0	1	0	**329**
14:45 - 14:59	0	0	0	2	19	41	90	73	38	12	3	0	0	0	1	**279**
15:00 - 15:14	0	1	0	4	29	40	55	45	31	12	6	0	0	0	0	**223**
15:15 - 15:29	0	0	0	4	4	46	111	85	37	9	3	0	0	0	0	**299**
15:30 - 15:44	0	0	0	4	6	46	68	87	58	20	6	0	0	0	0	**295**
15:45 - 15:59	0	7	1	1	13	35	61	56	28	10	3	2	0	0	0	**217**
16:00 - 16:14	0	0	1	3	7	35	68	100	53	15	6	0	0	0	0	**288**
16:15 - 16:29	0	3	1	2	8	39	74	104	61	21	1	1	0	0	0	**315**
16:30 - 16:44	1	0	4	6	14	28	79	83	49	15	7	1	0	0	0	**287**
16:45 - 16:59	0	0	0	6	12	42	65	102	54	23	7	4	0	0	1	**316**
17:00 - 17:14	0	0	2	7	17	34	103	94	49	17	4	0	0	0	1	**328**
17:15 - 17:29	0	4	1	5	11	34	107	105	60	20	2	1	0	0	0	**350**
17:30 - 17:44	0	0	0	2	10	25	74	80	75	25	5	2	0	0	0	**298**
17:45 - 17:59	0	1	0	1	16	28	77	116	79	19	10	0	0	0	0	**347**
18:00 - 18:14	0	0	0	3	7	36	104	109	56	17	8	0	0	0	0	**340**
18:15 - 18:29	0	0	0	0	2	29	63	78	55	32	3	0	0	0	0	**262**
18:30 - 18:44	0	0	0	2	8	38	74	97	66	27	8	1	2	0	0	**323**
18:45 - 18:59	3	3	1	6	16	29	73	80	66	21	3	2	1	0	0	**304**
19:00 - 19:14	1	2	0	0	20	31	85	74	44	16	3	0	1	0	0	**277**
19:15 - 19:29	0	1	0	3	6	41	79	114	60	21	3	1	0	0	0	**329**
19:30 - 19:44	0	0	0	2	2	30	82	85	54	19	7	0	1	0	0	**282**
19:45 - 19:59	0	0	0	0	12	30	82	94	59	25	1	0	0	0	0	**303**
20:00 - 20:14	0	0	0	2	9	30	73	106	55	18	5	1	1	0	0	**300**
20:15 - 20:29	0	1	1	0	5	26	69	68	46	13	3	5	1	0	0	**238**
20:30 - 20:44	0	0	0	1	4	16	51	66	49	25	7	1	1	0	0	**221**
20:45 - 20:59	0	0	0	0	1	13	48	66	44	25	5	2	1	0	0	**205**
21:00 - 21:14	0	1	0	2	6	19	48	59	41	23	3	3	0	0	0	**205**
21:15 - 21:29	0	0	0	1	7	27	53	57	31	10	3	1	0	0	0	**190**
21:30 - 21:44	0	0	0	0	3	14	41	48	48	24	5	0	2	0	0	**185**
21:45 - 21:59	0	0	0	0	4	16	48	56	45	23	5	4	1	0	0	**202**
22:00 - 22:14	0	0	0	0	6	14	35	37	41	28	10	4	0	0	0	**175**
22:15 - 22:29	0	1	0	0	3	16	43	39	30	27	8	5	0	0	0	**172**
22:30 - 22:44	0	0	0	0	1	3	15	30	39	24	10	5	0	0	0	**127**
22:45 - 22:59	0	0	0	0	2	7	25	29	27	21	9	0	1	0	0	**121**
23:00 - 23:14	0	0	0	0	1	4	16	27	35	18	4	2	1	0	0	**108**
23:15 - 23:29	0	0	0	0	0	2	15	23	26	24	8	3	0	0	0	**101**
23:30 - 23:44	0	0	0	0	1	3	14	35	30	15	4	5	1	0	1	**109**
23:45 - 23:59	0	0	0	0	1	1	4	24	28	17	5	0	0	0	0	**80**
Totals	**27**	**70**	**79**	**265**	**1052**	**3142**	**5899**	**5752**	**3498**	**1553**	**462**	**118**	**34**	**10**	**15**	**21976**
Percent of Total	**0.1**	**0.3**	**0.4**	**1.2**	**4.8**	**14.3**	**26.8**	**26.2**	**15.9**	**7.1**	**2.1**	**0.5**	**0.2**	**0.0**	**0.1**	**100**
Percent of AM	**0.1**	**0.4**	**0.6**	**1.6**	**5.2**	**16.1**	**27.2**	**23.4**	**14.3**	**7.3**	**2.6**	**0.6**	**0.2**	**0.1**	**0.1**	**100**
Percent of PM	**0.1**	**0.2**	**0.2**	**0.9**	**4.4**	**12.9**	**26.5**	**28.3**	**17.2**	**6.9**	**1.8**	**0.5**	**0.1**	**0.0**	**0.0**	**100**

Daily Eastbound Speeds (MPH)

Study Date: Wednesday, 10/17/2018
Unit ID: 0181
Location: SW 40TH ST / E OF SW 70TH AVE

Standard Deviation:	7.9 MPH	Ten Mile Pace:	31 to 40 MPH	85th Percentile:	44.4 MPH
Mean Speed:	36.6 MPH	Percent in Ten Mile Pace:	53.0%		
Median Speed:	36.4 MPH			15th Percentile:	28.9 MPH
Modal Speed:	33.5 MPH			90th Percentile:	46.0 MPH
				95th Percentile:	49.5 MPH

Daily Eastbound Speeds (MPH)

Study Date: Thursday, 10/18/2018
Unit ID: 0181
Location: SW 40TH ST / E OF SW 70TH AVE

	1-5	6-10	11-15	16-20	21-25	26-30	31-35	36-40	41-45	46-50	51-55	56-60	61-65	66-70	71-99	Total
00:00 - 00:14	0	0	0	0	0	0	5	17	17	6	6	2	2	3	0	**58**
00:15 - 00:29	0	0	0	0	0	1	6	20	16	13	7	1	0	0	0	**64**
00:30 - 00:44	0	0	0	0	2	2	3	11	20	10	4	4	0	0	0	**56**
00:45 - 00:59	0	0	0	0	0	2	3	7	12	12	4	1	0	0	0	**41**
01:00 - 01:14	0	0	0	0	0	1	3	14	13	10	2	1	0	0	0	**44**
01:15 - 01:29	0	0	0	0	1	1	8	6	15	5	4	1	0	0	0	**41**
01:30 - 01:44	0	0	0	0	0	1	5	8	15	1	2	0	1	1	0	**34**
01:45 - 01:59	0	0	0	1	0	2	1	5	4	2	4	0	0	0	0	**19**
02:00 - 02:14	0	0	0	0	1	0	1	5	6	3	1	0	0	0	0	**17**
02:15 - 02:29	0	0	0	0	0	0	3	3	6	3	1	1	0	0	0	**17**
02:30 - 02:44	0	0	0	1	0	1	1	3	2	5	1	1	0	0	0	**15**
02:45 - 02:59	0	0	0	0	0	2	2	4	6	3	0	1	0	0	0	**18**
03:00 - 03:14	0	0	0	0	1	0	1	4	4	2	2	0	0	0	0	**14**
03:15 - 03:29	0	0	0	0	0	1	6	6	2	3	1	0	0	0	0	**19**
03:30 - 03:44	0	0	0	0	0	1	2	10	3	3	1	0	0	0	0	**20**
03:45 - 03:59	0	0	0	0	1	2	2	3	7	7	1	1	0	0	0	**24**
04:00 - 04:14	0	0	0	0	0	4	4	8	2	4	1	0	0	0	0	**23**
04:15 - 04:29	0	0	0	0	0	0	4	10	6	4	1	1	0	0	0	**26**
04:30 - 04:44	0	0	0	0	1	5	2	4	13	7	4	1	0	0	0	**37**
04:45 - 04:59	0	0	0	0	1	2	2	15	15	9	8	2	0	0	0	**54**
05:00 - 05:14	0	0	0	0	0	2	7	24	24	15	6	4	0	0	0	**82**
05:15 - 05:29	0	0	0	0	0	3	3	23	47	38	11	0	0	0	0	**125**
05:30 - 05:44	0	0	0	1	1	0	10	42	59	35	29	5	1	0	0	**183**
05:45 - 05:59	0	0	0	0	0	3	17	30	77	51	29	4	0	0	0	**211**
06:00 - 06:14	0	0	0	0	4	9	39	69	64	41	17	3	0	0	0	**246**
06:15 - 06:29	0	0	0	4	7	14	63	123	89	41	12	7	1	0	0	**361**
06:30 - 06:44	1	0	1	3	8	25	77	136	82	32	4	2	0	0	1	**372**
06:45 - 06:59	0	0	6	3	23	70	127	104	48	20	2	0	0	0	0	**403**
07:00 - 07:14	0	1	5	8	23	80	110	71	24	6	0	0	0	0	0	**328**
07:15 - 07:29	1	2	5	13	67	90	106	44	12	4	0	1	0	0	0	**345**
07:30 - 07:44	1	3	4	8	33	53	67	44	19	5	1	0	0	0	0	**238**
07:45 - 07:59	0	4	14	15	59	76	48	24	6	4	0	0	0	1	2	**253**
08:00 - 08:14	2	9	20	33	44	69	33	7	5	1	0	2	2	0	1	**228**
08:15 - 08:29	0	10	30	29	39	18	15	9	1	0	0	1	0	1	0	**153**
08:30 - 08:44	1	6	11	22	49	40	57	13	3	0	0	1	0	0	2	**205**
08:45 - 08:59	0	1	10	10	41	76	117	60	22	4	1	0	1	0	0	**343**
09:00 - 09:14	0	0	0	6	18	71	122	85	15	4	3	0	0	0	1	**325**
09:15 - 09:29	0	0	2	6	63	89	93	63	20	6	1	0	1	0	0	**344**
09:30 - 09:44	0	1	4	11	27	55	100	63	17	4	2	1	0	0	0	**285**
09:45 - 09:59	0	3	4	12	29	72	100	50	19	8	2	1	0	0	0	**300**
10:00 - 10:14	0	0	1	2	21	50	57	52	37	9	4	1	0	0	1	**235**
10:15 - 10:29	0	0	0	1	18	40	70	65	25	14	4	1	0	0	0	**238**
10:30 - 10:44	3	0	0	5	13	43	96	50	24	5	2	1	0	0	1	**243**
10:45 - 10:59	0	3	0	2	17	28	64	53	34	9	5	2	0	0	1	**218**
11:00 - 11:14	0	0	1	2	11	28	32	56	31	15	3	0	0	0	0	**179**
11:15 - 11:29	0	0	0	2	15	27	42	69	33	13	3	0	0	1	1	**206**
11:30 - 11:44	0	0	0	0	16	27	54	44	26	8	4	2	0	0	0	**181**
11:45 - 11:59	0	1	1	4	11	18	76	73	41	10	7	0	0	0	0	**242**
12:00 - 12:14	0	0	1	0	12	25	56	56	24	9	3	0	0	0	0	**186**
12:15 - 12:29	0	0	0	3	19	34	68	54	33	4	0	0	0	0	0	**215**
12:30 - 12:44	0	0	0	0	7	22	40	49	29	9	0	0	0	0	0	**156**

Daily Eastbound Speeds (MPH)

Study Date: Thursday, 10/18/2018
Unit ID: 0181
Location: SW 40TH ST / E OF SW 70TH AVE

	1-5	6-10	11-15	16-20	21-25	26-30	31-35	36-40	41-45	46-50	51-55	56-60	61-65	66-70	71-99	Total
12:45 - 12:59	0	0	1	3	4	25	26	49	36	7	6	0	0	1	0	**158**
13:00 - 13:14	0	0	0	0	6	32	43	41	35	12	2	0	0	0	1	**172**
13:15 - 13:29	0	0	0	0	9	19	36	54	31	8	0	0	0	0	0	**157**
13:30 - 13:44	0	0	1	1	3	18	46	49	25	6	4	2	0	0	0	**155**
13:45 - 13:59	0	0	0	0	5	15	46	46	27	8	4	1	0	0	0	**152**
14:00 - 14:14	0	2	0	3	4	12	43	51	33	7	2	1	0	0	0	**158**
14:15 - 14:29	0	0	0	0	5	14	43	43	21	8	1	2	0	0	1	**138**
14:30 - 14:44	0	0	0	0	2	22	26	44	21	5	4	0	0	1	0	**125**
14:45 - 14:59	0	0	0	1	6	17	41	41	17	8	4	0	0	0	0	**135**
15:00 - 15:14	0	0	1	0	6	17	43	44	25	3	1	0	0	1	1	**142**
15:15 - 15:29	0	0	0	0	13	33	48	41	23	2	0	0	0	0	0	**160**
15:30 - 15:44	0	3	6	8	18	16	20	28	18	8	1	0	0	0	0	**126**
15:45 - 15:59	0	0	0	3	8	14	31	35	19	5	3	0	0	0	1	**119**
16:00 - 16:14	0	0	1	2	8	10	38	59	34	12	7	1	1	0	0	**173**
16:15 - 16:29	0	0	0	0	4	10	35	40	39	12	2	0	0	0	0	**142**
16:30 - 16:44	0	0	0	0	4	15	32	34	16	14	4	1	1	0	0	**121**
16:45 - 16:59	0	0	0	0	6	10	21	40	27	9	4	1	0	0	0	**118**
17:00 - 17:14	0	0	0	4	4	25	44	58	22	6	2	0	0	0	0	**165**
17:15 - 17:29	0	0	0	1	6	14	34	46	27	4	4	0	0	0	0	**136**
17:30 - 17:44	0	0	0	0	4	15	26	50	42	17	1	1	0	0	0	**156**
17:45 - 17:59	0	0	1	6	11	21	30	64	36	20	2	0	0	0	0	**191**
18:00 - 18:14	0	0	0	3	9	18	37	44	36	9	5	1	0	0	0	**162**
18:15 - 18:29	0	2	0	2	6	16	45	46	25	17	7	0	0	0	0	**166**
18:30 - 18:44	0	0	0	0	8	25	34	39	34	12	4	2	1	0	0	**159**
18:45 - 18:59	0	0	0	5	7	11	31	45	32	8	3	0	0	0	0	**142**
19:00 - 19:14	0	0	0	0	7	19	41	50	32	13	5	0	1	0	0	**168**
19:15 - 19:29	0	0	0	0	3	23	54	52	41	11	4	2	0	0	0	**190**
19:30 - 19:44	0	1	0	0	3	26	46	38	32	9	5	0	0	0	0	**160**
19:45 - 19:59	0	0	2	9	37	39	50	51	23	2	0	2	0	0	0	**215**
20:00 - 20:14	0	0	0	1	19	45	68	51	25	5	3	0	0	0	0	**217**
20:15 - 20:29	0	0	1	1	10	33	69	39	27	14	1	0	1	0	0	**196**
20:30 - 20:44	0	0	0	0	5	20	45	45	37	12	2	0	1	0	0	**167**
20:45 - 20:59	0	0	0	0	0	5	40	40	36	15	2	1	1	1	0	**141**
21:00 - 21:14	0	0	0	0	5	18	36	49	28	19	1	2	0	0	0	**158**
21:15 - 21:29	0	0	0	0	1	13	25	33	29	21	7	3	0	0	0	**132**
21:30 - 21:44	0	0	0	2	3	4	20	29	29	23	5	2	1	0	0	**118**
21:45 - 21:59	0	0	0	3	5	7	21	31	29	10	5	1	1	0	0	**113**
22:00 - 22:14	0	0	0	0	6	9	16	33	32	20	3	1	0	0	0	**120**
22:15 - 22:29	0	0	0	0	5	6	13	24	35	23	4	2	1	0	0	**113**
22:30 - 22:44	0	0	0	0	5	5	9	21	19	21	8	4	3	0	0	**95**
22:45 - 22:59	0	0	0	0	0	4	14	18	24	21	10	3	0	1	0	**95**
23:00 - 23:14	0	0	0	0	0	4	9	23	30	10	5	3	1	0	0	**85**
23:15 - 23:29	0	0	0	0	0	3	8	15	12	16	3	2	1	0	0	**60**
23:30 - 23:44	0	0	0	1	2	0	13	19	20	10	9	1	0	0	0	**75**
23:45 - 23:59	0	0	0	1	1	0	5	9	17	10	3	3	0	0	0	**49**
Totals	**9**	**52**	**134**	**267**	**986**	**2012**	**3531**	**3669**	**2432**	**1048**	**372**	**102**	**24**	**12**	**15**	**14665**
Percent of Total	**0.1**	**0.4**	**0.9**	**1.8**	**6.7**	**13.7**	**24.1**	**25.0**	**16.6**	**7.1**	**2.5**	**0.7**	**0.2**	**0.1**	**0.1**	**100**
Percent of AM	**0.1**	**0.6**	**1.5**	**2.6**	**8.6**	**15.6**	**24.2**	**22.2**	**14.1**	**6.7**	**2.7**	**0.7**	**0.1**	**0.1**	**0.1**	**100**
Percent of PM	**0.0**	**0.1**	**0.2**	**0.9**	**4.6**	**11.6**	**23.9**	**28.2**	**19.3**	**7.7**	**2.4**	**0.6**	**0.2**	**0.1**	**0.1**	**100**

Daily Eastbound Speeds (MPH)

Study Date: Thursday, 10/18/2018
Unit ID: 0181
Location: SW 40TH ST / E OF SW 70TH AVE

Standard Deviation:	8.6 MPH	Ten Mile Pace:	31 to 40 MPH	85th Percentile:	44.7 MPH
Mean Speed:	36.4 MPH	Percent in Ten Mile Pace:	49.1%	15th Percentile:	27.9 MPH
Median Speed:	36.5 MPH			90th Percentile:	46.5 MPH
Modal Speed:	38.5 MPH			95th Percentile:	50.0 MPH

Daily Westbound Speeds (MPH)

Study Date: Tuesday, 10/16/2018
Unit ID: 0208
Location: SW 40TH ST / E OF SW 70TH AVE

	0-5	5-10	10-15	15-20	20-25	25-30	30-35	35-40	40-45	45-50	50-55	55-60	60-65	65-70	70-75	Total
00:00 - 00:14	0	0	0	1	0	2	6	23	20	16	6	1	0	0	0	**75**
00:15 - 00:29	0	0	0	0	0	0	5	24	26	10	4	1	0	0	0	**70**
00:30 - 00:44	0	0	0	1	1	0	3	24	23	8	5	0	1	0	0	**66**
00:45 - 00:59	0	0	0	0	1	3	4	7	17	8	6	0	0	0	0	**46**
01:00 - 01:14	0	0	0	0	1	1	3	8	13	8	4	0	0	0	0	**38**
01:15 - 01:29	0	0	0	0	0	0	3	15	8	4	2	1	0	0	0	**33**
01:30 - 01:44	0	0	0	0	1	1	1	13	8	4	0	0	0	0	0	**28**
01:45 - 01:59	0	0	0	0	0	0	2	8	9	7	0	0	0	0	0	**26**
02:00 - 02:14	0	0	0	0	3	2	3	12	2	5	1	1	0	0	1	**30**
02:15 - 02:29	0	0	0	0	1	1	2	6	4	5	2	0	0	0	0	**21**
02:30 - 02:44	0	0	0	0	1	2	1	8	7	4	3	0	0	0	0	**26**
02:45 - 02:59	0	0	0	1	0	0	3	6	10	4	0	2	0	0	0	**26**
03:00 - 03:14	0	0	0	0	2	2	0	7	10	2	2	0	0	0	0	**25**
03:15 - 03:29	0	0	0	0	0	2	3	4	4	3	0	1	0	0	0	**17**
03:30 - 03:44	0	0	0	0	0	1	4	2	4	2	0	0	0	0	0	**13**
03:45 - 03:59	0	0	0	0	1	5	1	5	2	4	0	0	1	0	0	**19**
04:00 - 04:14	0	0	0	1	0	2	1	5	7	2	2	0	0	0	0	**20**
04:15 - 04:29	0	0	0	0	1	0	4	11	6	10	0	2	0	0	0	**34**
04:30 - 04:44	0	0	0	0	1	0	4	8	6	4	1	1	0	0	0	**25**
04:45 - 04:59	0	0	0	0	1	1	7	19	13	4	1	0	0	0	0	**46**
05:00 - 05:14	0	0	0	0	1	1	4	13	10	8	3	2	1	0	0	**43**
05:15 - 05:29	0	0	0	1	2	3	6	13	23	16	8	1	0	1	0	**74**
05:30 - 05:44	0	0	1	1	4	5	3	28	31	13	8	4	3	0	0	**101**
05:45 - 05:59	0	0	0	3	10	2	11	25	33	20	18	5	1	1	0	**129**
06:00 - 06:14	0	0	0	0	3	3	10	25	37	25	14	5	1	0	0	**123**
06:15 - 06:29	0	0	0	1	4	5	13	36	50	32	14	7	1	0	1	**164**
06:30 - 06:44	0	0	0	2	9	2	14	56	63	45	20	5	2	0	1	**219**
06:45 - 06:59	0	0	0	2	9	7	25	77	78	41	12	4	1	0	0	**256**
07:00 - 07:14	0	1	0	3	14	20	56	92	80	25	14	2	0	1	0	**308**
07:15 - 07:29	0	0	1	7	14	15	69	109	104	29	15	2	1	1	0	**367**
07:30 - 07:44	0	0	2	6	23	22	80	124	90	35	12	2	0	0	0	**396**
07:45 - 07:59	0	0	0	4	30	25	71	121	87	30	4	1	1	0	0	**374**
08:00 - 08:14	0	1	0	6	18	23	61	113	85	32	7	0	0	0	0	**346**
08:15 - 08:29	0	2	1	3	18	25	84	113	81	37	9	1	0	0	0	**374**
08:30 - 08:44	0	3	2	14	20	16	73	110	98	37	15	1	2	0	0	**391**
08:45 - 08:59	0	0	3	4	22	18	67	95	85	23	6	1	0	0	0	**324**
09:00 - 09:14	1	1	0	2	22	27	89	108	64	35	11	0	1	1	0	**362**
09:15 - 09:29	0	1	1	10	21	28	66	95	89	34	5	1	0	0	0	**351**
09:30 - 09:44	0	1	1	5	18	25	69	123	76	26	11	0	0	0	0	**355**
09:45 - 09:59	0	0	1	1	21	37	60	76	60	38	10	1	1	0	0	**306**
10:00 - 10:14	0	0	0	7	21	27	79	96	70	29	6	1	0	0	0	**336**
10:15 - 10:29	0	0	0	2	13	31	61	103	79	26	8	0	0	0	0	**323**
10:30 - 10:44	1	0	1	6	27	43	72	75	49	14	6	1	0	0	0	**295**
10:45 - 10:59	0	0	1	6	39	31	83	94	43	23	5	2	0	0	0	**327**
11:00 - 11:14	1	0	1	3	25	19	79	88	62	16	6	1	0	0	0	**301**
11:15 - 11:29	0	0	0	5	22	20	76	89	59	16	3	0	0	0	0	**290**
11:30 - 11:44	4	0	3	7	23	56	64	57	40	11	3	2	0	0	0	**270**
11:45 - 11:59	0	0	0	2	19	43	87	85	33	17	0	0	0	1	0	**287**
12:00 - 12:14	0	0	0	6	28	57	139	90	41	13	2	0	0	0	0	**376**
12:15 - 12:29	0	0	4	4	32	63	83	96	31	12	2	0	0	0	0	**327**
12:30 - 12:44	0	1	1	5	28	42	94	114	55	13	5	1	1	0	0	**360**

Daily Westbound Speeds (MPH)

Study Date: Tuesday, 10/16/2018
Unit ID: 0208
Location: SW 40TH ST / E OF SW 70TH AVE

	0-5	5-10	10-15	15-20	20-25	25-30	30-35	35-40	40-45	45-50	50-55	55-60	60-65	65-70	70-75	Total
12:45 - 12:59	0	1	0	8	32	51	97	78	52	8	3	0	0	0	0	**330**
13:00 - 13:14	0	1	0	4	27	52	103	102	55	9	1	1	0	0	0	**355**
13:15 - 13:29	0	3	2	7	55	59	106	86	29	11	2	0	0	0	0	**360**
13:30 - 13:44	3	6	5	21	46	46	71	54	22	2	0	3	0	0	0	**279**
13:45 - 13:59	0	0	1	14	20	72	107	102	49	8	1	2	0	0	0	**376**
14:00 - 14:14	0	1	1	3	23	62	92	102	52	13	0	0	1	0	1	**351**
14:15 - 14:29	0	0	0	6	30	65	138	102	39	6	0	0	0	0	0	**386**
14:30 - 14:44	0	1	2	10	33	89	115	68	42	6	0	0	0	1	0	**367**
14:45 - 14:59	0	7	16	43	56	63	52	32	6	3	0	0	0	1	0	**279**
15:00 - 15:14	0	2	6	26	66	78	91	68	31	1	0	0	0	0	0	**369**
15:15 - 15:29	0	5	10	30	53	57	68	53	23	5	0	0	0	0	0	**304**
15:30 - 15:44	2	17	16	27	48	17	14	10	5	3	0	0	0	0	0	**159**
15:45 - 15:59	7	11	28	32	35	11	1	1	0	0	0	0	0	0	0	**126**
16:00 - 16:14	5	11	17	32	17	9	3	4	2	1	0	0	1	0	0	**102**
16:15 - 16:29	1	17	16	14	5	2	0	3	0	2	1	0	0	0	0	**61**
16:30 - 16:44	4	10	12	12	10	5	0	1	1	1	1	0	1	0	0	**58**
16:45 - 16:59	6	10	19	25	16	5	2	2	0	2	0	0	1	0	0	**88**
17:00 - 17:14	6	25	26	37	34	18	1	3	1	0	2	0	0	0	0	**153**
17:15 - 17:29	3	9	10	18	15	7	1	0	0	1	0	0	0	1	0	**65**
17:30 - 17:44	6	13	16	16	23	3	0	1	0	1	0	0	0	0	0	**79**
17:45 - 17:59	3	14	15	12	10	0	2	0	0	0	0	0	1	0	0	**57**
18:00 - 18:14	3	5	2	16	15	12	3	1	1	0	1	1	0	0	0	**60**
18:15 - 18:29	2	12	9	30	18	0	1	0	0	1	0	0	0	0	0	**73**
18:30 - 18:44	1	17	8	14	24	2	1	1	1	0	0	2	0	1	0	**72**
18:45 - 18:59	0	5	4	22	35	28	42	46	29	4	1	2	0	0	0	**218**
19:00 - 19:14	0	1	2	4	29	69	105	128	62	14	3	0	0	0	0	**417**
19:15 - 19:29	0	1	2	9	25	57	123	130	34	14	5	0	0	1	0	**401**
19:30 - 19:44	0	1	0	2	18	34	112	117	62	20	3	0	0	0	0	**369**
19:45 - 19:59	0	0	0	6	23	12	95	127	77	40	8	2	0	0	0	**390**
20:00 - 20:14	0	0	0	5	20	16	68	83	92	29	7	1	1	0	0	**322**
20:15 - 20:29	0	0	0	3	9	28	72	94	79	40	11	1	1	1	1	**340**
20:30 - 20:44	0	1	0	2	14	14	39	112	81	36	11	2	1	0	0	**313**
20:45 - 20:59	0	0	0	2	10	13	57	104	78	34	7	5	0	0	0	**310**
21:00 - 21:14	0	0	0	1	11	7	26	98	85	35	12	5	1	2	0	**283**
21:15 - 21:29	0	0	0	0	5	4	40	85	85	24	9	2	2	0	0	**256**
21:30 - 21:44	0	0	0	1	3	6	29	82	65	28	7	2	1	0	0	**224**
21:45 - 21:59	0	0	0	1	5	1	17	67	71	48	11	3	3	1	0	**228**
22:00 - 22:14	0	0	0	2	2	4	21	69	70	39	8	0	0	0	0	**215**
22:15 - 22:29	0	0	0	1	1	7	24	65	66	31	13	1	1	0	0	**210**
22:30 - 22:44	0	0	0	0	2	1	15	48	50	23	6	5	2	0	0	**152**
22:45 - 22:59	0	0	0	0	1	2	11	41	50	25	9	1	0	0	0	**140**
23:00 - 23:14	0	0	0	1	1	2	11	37	41	31	10	3	1	1	0	**139**
23:15 - 23:29	0	0	0	0	0	1	16	23	51	39	11	7	2	1	0	**151**
23:30 - 23:44	0	0	0	2	3	2	8	23	46	24	8	2	1	0	0	**119**
23:45 - 23:59	0	0	0	0	3	2	9	34	37	15	4	2	0	0	0	**106**
Totals	**59**	**218**	**269**	**653**	**1506**	**1861**	**3917**	**5241**	**3807**	**1562**	**477**	**118**	**41**	**17**	**5**	**19751**
Percent of Total	**0.3**	**1.1**	**1.4**	**3.3**	**7.6**	**9.4**	**19.8**	**26.5**	**19.3**	**7.9**	**2.4**	**0.6**	**0.2**	**0.1**	**0.0**	**100**
Percent of AM	**0.1**	**0.1**	**0.2**	**1.4**	**5.7**	**7.1**	**18.8**	**29.0**	**23.1**	**10.0**	**3.4**	**0.7**	**0.2**	**0.1**	**0.0**	**100**
Percent of PM	**0.5**	**1.8**	**2.2**	**4.8**	**9.0**	**11.1**	**20.6**	**24.7**	**16.4**	**6.3**	**1.6**	**0.5**	**0.2**	**0.1**	**0.0**	**100**

Daily Westbound Speeds (MPH)

Study Date: Tuesday, 10/16/2018
Unit ID: 0208
Location: SW 40TH ST / E OF SW 70TH AVE

Standard Deviation:	9.4 MPH	Ten Mile Pace:	30 to 39 MPH	85th Percentile:	44.8 MPH
Mean Speed:	35.8 MPH	Percent in Ten Mile Pace:	46.4%	15th Percentile:	25.8 MPH
Median Speed:	36.6 MPH			90th Percentile:	45.9 MPH
Modal Speed:	38.0 MPH			95th Percentile:	49.7 MPH

Daily Westbound Speeds (MPH)

Study Date: Wednesday, 10/17/2018
Unit ID: 0208
Location: SW 40TH ST / E OF SW 70TH AVE

	0-5	5-10	10-15	15-20	20-25	25-30	30-35	35-40	40-45	45-50	50-55	55-60	60-65	65-70	70-75	Total
00:00 - 00:14	0	0	0	0	0	2	3	24	34	12	3	3	1	0	0	**82**
00:15 - 00:29	0	0	0	0	2	2	7	27	17	14	1	3	2	0	0	**75**
00:30 - 00:44	0	0	0	0	0	0	3	14	18	10	2	2	2	0	0	**51**
00:45 - 00:59	0	0	0	0	0	0	4	15	19	7	4	1	1	0	0	**51**
01:00 - 01:14	0	0	0	0	0	0	5	10	17	9	3	1	0	0	2	**47**
01:15 - 01:29	0	0	0	0	0	1	6	21	13	10	5	1	0	0	0	**57**
01:30 - 01:44	0	0	0	1	0	0	1	8	11	6	3	1	0	0	0	**31**
01:45 - 01:59	0	0	0	1	1	1	1	7	8	6	5	0	1	0	0	**31**
02:00 - 02:14	0	0	0	1	0	1	1	10	9	8	2	2	0	0	0	**34**
02:15 - 02:29	0	0	0	0	0	0	3	9	8	4	2	1	0	0	0	**27**
02:30 - 02:44	0	0	0	0	0	0	4	6	10	1	1	0	0	0	0	**22**
02:45 - 02:59	0	0	0	0	1	0	1	1	9	4	1	2	0	0	0	**19**
03:00 - 03:14	0	0	0	0	1	2	2	1	15	3	3	0	0	0	0	**27**
03:15 - 03:29	0	0	0	0	0	0	2	2	3	0	3	0	0	0	0	**10**
03:30 - 03:44	0	0	0	0	0	2	3	6	11	4	3	0	0	0	0	**29**
03:45 - 03:59	0	0	0	0	0	1	1	5	6	2	1	0	2	0	0	**18**
04:00 - 04:14	0	0	0	0	1	1	5	7	9	5	2	0	0	0	0	**30**
04:15 - 04:29	0	0	0	0	1	1	5	4	5	2	1	1	0	0	0	**20**
04:30 - 04:44	0	0	0	0	3	2	3	10	9	6	6	2	0	0	1	**42**
04:45 - 04:59	0	0	0	0	0	1	5	10	14	6	3	2	0	0	0	**41**
05:00 - 05:14	0	0	0	0	0	3	3	6	19	12	2	3	0	0	0	**48**
05:15 - 05:29	0	0	0	0	3	4	8	15	24	15	10	3	0	0	0	**82**
05:30 - 05:44	0	0	0	1	1	5	4	15	27	16	10	2	1	0	0	**82**
05:45 - 05:59	0	0	0	1	6	4	10	26	38	25	17	7	1	0	0	**135**
06:00 - 06:14	0	0	0	3	7	3	7	24	29	25	13	4	1	1	1	**118**
06:15 - 06:29	0	0	0	1	4	4	11	40	42	33	22	4	1	0	0	**162**
06:30 - 06:44	0	0	0	5	8	9	14	44	68	44	15	2	2	0	1	**212**
06:45 - 06:59	0	0	0	2	5	4	18	80	75	41	13	2	0	0	0	**240**
07:00 - 07:14	0	1	0	2	9	7	59	100	78	27	5	4	2	0	1	**295**
07:15 - 07:29	0	2	1	3	14	12	45	105	73	54	13	2	0	0	0	**324**
07:30 - 07:44	2	1	4	6	20	20	62	110	91	28	7	1	1	0	0	**353**
07:45 - 07:59	0	2	1	3	18	11	55	102	83	43	12	5	0	1	0	**336**
08:00 - 08:14	0	0	1	3	9	18	59	95	109	37	17	2	0	0	0	**350**
08:15 - 08:29	0	0	0	4	22	15	63	101	106	47	7	1	0	0	0	**366**
08:30 - 08:44	1	4	2	3	13	24	57	111	96	42	12	1	0	0	0	**366**
08:45 - 08:59	0	1	0	5	18	34	74	122	74	24	10	4	0	0	0	**366**
09:00 - 09:14	0	0	0	5	14	17	91	100	70	17	8	1	0	0	0	**323**
09:15 - 09:29	0	0	0	1	27	53	98	108	47	11	0	0	0	0	0	**345**
09:30 - 09:44	0	0	0	5	30	61	130	104	35	4	1	1	0	0	0	**371**
09:45 - 09:59	0	1	3	6	12	32	114	130	65	15	4	1	0	0	0	**383**
10:00 - 10:14	0	0	1	9	31	34	84	93	62	20	6	0	0	0	0	**340**
10:15 - 10:29	0	0	0	4	21	32	110	91	67	11	5	0	0	0	0	**341**
10:30 - 10:44	0	0	0	3	30	54	109	91	45	18	3	1	0	0	0	**354**
10:45 - 10:59	2	1	0	4	25	59	120	93	46	13	2	0	0	0	0	**365**
11:00 - 11:14	0	0	0	6	22	36	120	86	39	16	0	0	0	1	0	**326**
11:15 - 11:29	1	1	3	14	38	40	77	91	34	10	2	0	0	0	0	**311**
11:30 - 11:44	0	0	0	7	31	38	115	89	56	17	7	1	0	0	0	**361**
11:45 - 11:59	0	0	0	4	24	43	111	101	51	21	2	0	0	0	0	**357**
12:00 - 12:14	0	0	1	5	24	48	97	75	47	22	3	0	0	0	0	**322**
12:15 - 12:29	0	2	0	6	46	61	127	96	35	7	0	0	0	0	0	**380**
12:30 - 12:44	0	0	0	6	31	48	108	122	54	11	2	0	0	0	0	**382**

Daily Westbound Speeds (MPH)

Study Date: Wednesday, 10/17/2018
Unit ID: 0208
Location: SW 40TH ST / E OF SW 70TH AVE

	0-5	5-10	10-15	15-20	20-25	25-30	30-35	35-40	40-45	45-50	50-55	55-60	60-65	65-70	70-75	Total
12:45 - 12:59	0	1	1	15	34	80	99	69	30	11	2	1	0	0	0	**343**
13:00 - 13:14	0	0	1	15	33	64	97	97	52	4	2	0	1	0	0	**366**
13:15 - 13:29	0	0	0	4	40	60	110	103	32	9	3	0	0	0	0	**361**
13:30 - 13:44	0	1	0	9	46	68	135	95	29	9	1	0	0	0	0	**393**
13:45 - 13:59	0	0	0	8	46	63	133	93	28	12	3	0	0	0	0	**386**
14:00 - 14:14	0	0	0	8	24	61	135	76	47	13	2	1	0	0	0	**367**
14:15 - 14:29	0	0	6	15	49	67	117	79	28	8	2	0	0	1	0	**372**
14:30 - 14:44	1	2	3	15	27	66	126	79	31	4	3	0	0	0	0	**357**
14:45 - 14:59	0	1	1	16	78	78	83	87	31	5	2	1	0	0	0	**383**
15:00 - 15:14	0	3	1	10	47	83	124	90	33	11	3	0	0	0	0	**405**
15:15 - 15:29	0	1	2	11	57	106	99	78	34	4	1	0	0	0	0	**393**
15:30 - 15:44	0	0	2	9	31	73	144	114	47	10	1	0	0	0	0	**431**
15:45 - 15:59	0	5	14	24	63	66	86	42	15	4	4	0	0	0	0	**323**
16:00 - 16:14	3	10	8	19	42	43	58	53	16	4	0	1	0	0	0	**257**
16:15 - 16:29	4	16	14	10	39	4	2	2	1	1	0	0	1	0	0	**94**
16:30 - 16:44	4	10	24	32	16	0	0	2	2	2	1	1	0	1	0	**95**
16:45 - 16:59	4	7	13	15	45	39	42	26	4	1	0	0	0	0	0	**196**
17:00 - 17:14	4	11	9	23	29	49	23	9	10	2	1	0	0	0	0	**170**
17:15 - 17:29	10	13	12	27	30	4	1	0	2	0	0	0	0	0	0	**99**
17:30 - 17:44	2	22	22	12	2	5	1	0	2	0	0	0	1	0	0	**69**
17:45 - 17:59	6	8	15	42	28	7	1	1	0	1	0	0	0	0	0	**109**
18:00 - 18:14	3	18	23	47	60	43	24	10	3	0	0	0	0	0	0	**231**
18:15 - 18:29	3	16	7	9	31	3	0	3	0	0	0	0	0	0	1	**73**
18:30 - 18:44	0	11	6	31	32	45	85	66	25	2	1	0	1	0	1	**306**
18:45 - 18:59	0	0	0	7	18	49	128	132	46	13	3	1	0	0	0	**397**
19:00 - 19:14	0	0	0	8	16	43	145	117	65	13	5	0	1	0	0	**413**
19:15 - 19:29	0	2	0	1	15	63	140	139	46	13	1	0	0	0	0	**420**
19:30 - 19:44	0	0	0	7	18	11	116	137	69	16	2	0	0	0	0	**376**
19:45 - 19:59	0	0	0	2	23	20	114	140	85	29	2	2	0	0	0	**417**
20:00 - 20:14	0	0	0	3	11	16	54	133	95	25	4	3	0	0	0	**344**
20:15 - 20:29	0	0	0	2	16	45	75	84	55	22	3	0	0	0	0	**302**
20:30 - 20:44	0	0	0	1	13	16	74	115	69	24	17	2	0	0	0	**331**
20:45 - 20:59	0	0	0	1	9	11	62	75	71	28	10	4	1	0	1	**273**
21:00 - 21:14	1	5	0	4	9	5	24	96	93	41	11	1	2	0	0	**292**
21:15 - 21:29	0	0	0	1	4	5	41	98	76	36	4	1	3	0	0	**269**
21:30 - 21:44	0	0	0	2	5	4	46	99	78	25	9	2	1	0	0	**271**
21:45 - 21:59	0	0	0	1	3	6	26	78	70	35	10	1	0	0	0	**230**
22:00 - 22:14	0	0	0	2	7	10	21	78	66	24	11	3	2	0	0	**224**
22:15 - 22:29	0	0	0	1	3	7	18	82	68	28	11	2	3	0	0	**223**
22:30 - 22:44	0	0	0	4	9	3	26	58	46	30	11	1	0	0	0	**188**
22:45 - 22:59	0	0	1	1	10	4	16	28	53	40	17	2	0	1	0	**173**
23:00 - 23:14	0	0	0	1	8	5	12	33	38	30	4	0	3	1	0	**135**
23:15 - 23:29	2	0	0	1	4	9	17	34	37	22	11	3	1	0	0	**141**
23:30 - 23:44	0	0	0	0	1	1	4	42	54	33	10	1	0	0	0	**146**
23:45 - 23:59	0	0	0	0	1	5	12	28	31	17	9	2	2	0	0	**107**
Totals	**53**	**179**	**202**	**606**	**1705**	**2365**	**5121**	**5863**	**3843**	**1506**	**481**	**110**	**41**	**7**	**9**	**22091**
Percent of Total	**0.2**	**0.8**	**0.9**	**2.7**	**7.7**	**10.7**	**23.2**	**26.5**	**17.4**	**6.8**	**2.2**	**0.5**	**0.2**	**0.0**	**0.0**	**100**
Percent of AM	**0.1**	**0.2**	**0.2**	**1.3**	**5.4**	**7.9**	**21.6**	**28.2**	**21.6**	**9.2**	**3.2**	**0.8**	**0.2**	**0.0**	**0.1**	**100**
Percent of PM	**0.4**	**1.2**	**1.4**	**3.7**	**9.2**	**12.5**	**24.2**	**25.4**	**14.6**	**5.3**	**1.5**	**0.3**	**0.2**	**0.0**	**0.0**	**100**

Daily Westbound Speeds (MPH)

Study Date: Wednesday, 10/17/2018
Unit ID: 0208
Location: SW 40TH ST / E OF SW 70TH AVE

Standard Deviation:	8.8 MPH	Ten Mile Pace:	30 to 39 MPH	85th Percentile:	44.2 MPH
Mean Speed:	35.6 MPH	Percent in Ten Mile Pace:	49.7%		
Median Speed:	35.8 MPH			15th Percentile:	26.4 MPH
Modal Speed:	38.0 MPH			90th Percentile:	45.9 MPH
				95th Percentile:	49.2 MPH

Daily Westbound Speeds (MPH)

Study Date: Thursday, 10/18/2018
Unit ID: 0208
Location: SW 40TH ST / E OF SW 70TH AVE

	0-5	5-10	10-15	15-20	20-25	25-30	30-35	35-40	40-45	45-50	50-55	55-60	60-65	65-70	70-75	Total
00:00 - 00:14	0	0	0	0	3	1	10	20	32	21	6	3	0	0	0	**96**
00:15 - 00:29	0	0	0	0	0	4	6	30	24	15	6	2	0	0	0	**87**
00:30 - 00:44	0	0	0	1	0	0	4	15	18	12	6	3	1	0	0	**60**
00:45 - 00:59	0	0	0	1	1	2	2	18	25	14	3	1	1	0	0	**68**
01:00 - 01:14	0	0	0	1	0	1	5	13	9	11	3	0	0	0	0	**43**
01:15 - 01:29	0	0	0	1	1	1	4	11	10	7	6	1	0	1	0	**43**
01:30 - 01:44	0	0	0	0	0	0	3	12	9	8	3	0	0	0	0	**35**
01:45 - 01:59	0	0	0	0	1	1	0	5	7	9	4	0	0	0	0	**27**
02:00 - 02:14	0	0	0	1	1	7	3	10	11	5	0	1	0	0	0	**39**
02:15 - 02:29	0	0	0	0	1	4	4	7	9	4	0	2	0	0	0	**31**
02:30 - 02:44	0	0	0	0	1	0	4	11	11	3	3	1	0	0	0	**34**
02:45 - 02:59	0	0	0	0	0	0	3	11	8	2	2	1	0	0	0	**27**
03:00 - 03:14	0	0	0	0	0	0	1	3	9	5	0	1	0	0	0	**19**
03:15 - 03:29	0	0	0	0	1	1	5	4	7	5	1	1	0	0	0	**25**
03:30 - 03:44	0	0	0	1	0	2	3	3	8	6	2	1	0	0	0	**26**
03:45 - 03:59	0	0	0	0	1	0	2	2	2	2	0	0	0	0	0	**9**
04:00 - 04:14	0	0	0	1	2	2	2	3	7	3	1	0	0	0	0	**21**
04:15 - 04:29	0	0	0	1	1	1	0	9	10	6	1	0	1	0	0	**30**
04:30 - 04:44	0	0	0	0	3	0	3	12	9	5	3	1	0	0	0	**36**
04:45 - 04:59	0	0	0	0	2	2	2	12	7	6	9	1	0	0	0	**41**
05:00 - 05:14	0	0	0	0	3	0	4	8	14	7	7	1	0	0	0	**44**
05:15 - 05:29	0	0	0	1	2	2	5	16	24	18	6	4	0	0	0	**78**
05:30 - 05:44	0	0	0	1	2	3	8	12	31	25	9	3	1	1	1	**97**
05:45 - 05:59	0	0	0	2	3	2	7	19	40	25	13	8	4	2	1	**126**
06:00 - 06:14	0	0	0	0	1	4	9	28	35	37	13	5	2	0	0	**134**
06:15 - 06:29	0	0	0	3	9	6	17	31	49	36	13	5	2	1	0	**172**
06:30 - 06:44	0	0	0	4	11	5	19	41	71	51	23	6	6	0	0	**237**
06:45 - 06:59	0	0	0	3	8	6	31	63	80	42	15	4	2	0	0	**254**
07:00 - 07:14	0	0	0	2	9	17	33	99	73	43	10	4	3	1	0	**294**
07:15 - 07:29	0	0	1	6	13	14	60	106	93	35	14	3	1	0	0	**346**
07:30 - 07:44	0	0	1	7	26	18	55	106	98	45	10	2	1	0	0	**369**
07:45 - 07:59	0	0	1	3	17	27	75	108	83	38	8	1	2	0	1	**364**
08:00 - 08:14	0	1	1	3	17	20	53	137	113	44	8	2	0	0	0	**399**
08:15 - 08:29	0	0	1	4	21	22	64	122	101	29	2	0	2	0	0	**368**
08:30 - 08:44	1	0	2	2	21	24	58	131	87	34	7	2	2	0	0	**371**
08:45 - 08:59	0	0	0	8	17	24	86	110	78	32	9	1	0	0	0	**365**
09:00 - 09:14	0	1	1	6	14	21	53	98	77	24	9	4	1	0	0	**309**
09:15 - 09:29	0	0	0	2	24	12	82	111	74	22	9	1	0	0	0	**337**
09:30 - 09:44	0	0	0	4	17	29	76	114	60	28	14	1	0	0	0	**343**
09:45 - 09:59	0	2	0	3	12	23	73	94	63	32	12	2	0	0	0	**316**
10:00 - 10:14	0	0	0	7	38	37	78	99	62	20	3	0	0	0	0	**344**
10:15 - 10:29	0	0	0	7	26	65	101	104	48	13	1	1	1	0	0	**367**
10:30 - 10:44	1	4	2	11	19	61	67	85	44	20	4	1	1	0	0	**320**
10:45 - 10:59	0	0	0	3	30	61	93	79	45	18	6	1	0	0	0	**336**
11:00 - 11:14	0	0	1	5	23	49	116	92	42	13	7	1	0	0	0	**349**
11:15 - 11:29	0	0	2	12	33	55	109	77	45	14	2	0	0	0	0	**349**
11:30 - 11:44	0	1	6	14	37	48	87	75	32	12	2	1	0	0	0	**315**
11:45 - 11:59	0	0	1	3	23	27	76	103	61	10	9	0	0	0	0	**313**
12:00 - 12:14	0	1	1	4	22	50	97	78	53	18	3	2	0	1	1	**331**
12:15 - 12:29	0	0	0	1	27	50	118	101	53	12	3	0	0	0	0	**365**
12:30 - 12:44	0	4	1	3	33	59	88	75	34	7	2	1	0	0	0	**307**

Daily Westbound Speeds (MPH)

Study Date: Thursday, 10/18/2018
Unit ID: 0208
Location: SW 40TH ST / E OF SW 70TH AVE

	0-5	5-10	10-15	15-20	20-25	25-30	30-35	35-40	40-45	45-50	50-55	55-60	60-65	65-70	70-75	Total
12:45 - 12:59	0	0	1	8	38	57	88	95	45	8	4	0	0	0	0	**344**
13:00 - 13:14	1	3	3	9	23	53	128	79	43	15	4	0	0	0	0	**361**
13:15 - 13:29	0	0	2	8	35	53	93	91	51	5	0	0	0	0	0	**338**
13:30 - 13:44	0	0	0	7	28	70	123	82	32	6	1	1	0	0	0	**350**
13:45 - 13:59	0	4	4	11	37	53	81	87	41	9	1	0	0	0	0	**328**
14:00 - 14:14	0	0	10	33	101	99	59	22	6	2	0	0	0	1	0	**333**
14:15 - 14:29	1	5	6	24	85	95	55	24	2	2	0	0	1	0	0	**300**
14:30 - 14:44	1	10	26	33	71	55	32	29	8	2	0	0	0	0	1	**268**
14:45 - 14:59	0	0	5	16	50	82	116	79	30	9	1	0	0	0	0	**388**
15:00 - 15:14	2	6	15	25	41	61	91	42	15	3	1	1	0	0	0	**303**
15:15 - 15:29	1	2	10	28	35	43	52	29	15	3	1	0	0	0	0	**219**
15:30 - 15:44	5	10	8	24	68	51	21	6	2	1	0	0	0	0	0	**196**
15:45 - 15:59	2	14	14	24	60	43	19	4	0	0	0	0	0	0	0	**180**
16:00 - 16:14	6	19	12	21	19	7	1	1	2	1	1	0	1	0	0	**91**
16:15 - 16:29	4	16	25	37	20	3	1	3	0	0	0	0	0	0	1	**110**
16:30 - 16:44	1	16	24	26	27	13	2	0	1	1	0	1	0	0	1	**113**
16:45 - 16:59	4	21	7	19	10	3	0	0	4	0	0	0	0	0	0	**68**
17:00 - 17:14	4	22	14	30	12	0	1	1	0	1	0	0	0	0	0	**85**
17:15 - 17:29	5	17	11	13	25	2	2	3	1	0	0	1	0	0	0	**80**
17:30 - 17:44	3	15	11	7	13	5	0	0	1	0	0	0	1	0	0	**56**
17:45 - 17:59	8	17	28	53	23	0	3	4	2	0	1	0	1	0	0	**140**
18:00 - 18:14	0	15	25	30	64	24	13	7	4	2	1	1	0	0	0	**186**
18:15 - 18:29	1	3	8	26	71	58	45	38	5	0	3	0	0	0	0	**258**
18:30 - 18:44	0	1	1	9	25	39	137	103	40	14	4	1	0	0	0	**374**
18:45 - 18:59	0	0	2	8	24	54	143	93	56	16	6	0	1	1	0	**404**
19:00 - 19:14	0	0	0	2	22	36	145	137	64	15	3	1	0	0	0	**425**
19:15 - 19:29	0	2	2	10	19	49	151	129	47	11	0	2	0	0	0	**422**
19:30 - 19:44	0	0	0	4	22	16	102	157	71	22	3	0	1	0	0	**398**
19:45 - 19:59	0	1	3	4	19	27	67	160	98	20	3	0	0	0	0	**402**
20:00 - 20:14	0	0	0	4	13	26	76	116	74	30	4	1	1	0	0	**345**
20:15 - 20:29	0	0	0	1	13	20	79	126	79	31	6	2	0	0	0	**357**
20:30 - 20:44	0	0	0	1	7	20	56	103	69	35	6	1	0	0	0	**298**
20:45 - 20:59	0	0	0	2	6	12	51	98	72	36	7	2	0	0	0	**286**
21:00 - 21:14	1	0	0	1	10	7	26	122	94	38	5	3	1	0	0	**308**
21:15 - 21:29	0	0	0	0	7	9	36	104	80	33	5	2	0	0	1	**277**
21:30 - 21:44	0	0	0	3	3	4	28	93	101	37	8	2	0	0	0	**279**
21:45 - 21:59	0	0	0	0	8	7	28	59	86	33	13	1	0	0	0	**235**
22:00 - 22:14	0	0	0	0	8	6	19	88	74	46	12	6	3	0	0	**262**
22:15 - 22:29	1	0	0	4	4	5	32	84	75	31	15	3	0	0	0	**254**
22:30 - 22:44	0	0	0	0	2	4	22	52	64	22	17	5	2	3	0	**193**
22:45 - 22:59	0	0	0	0	3	5	23	58	45	36	14	6	2	2	1	**195**
23:00 - 23:14	0	0	1	2	4	4	11	43	61	27	13	3	0	0	0	**169**
23:15 - 23:29	0	0	0	3	4	8	15	50	56	25	13	0	0	0	0	**174**
23:30 - 23:44	0	0	0	0	0	3	12	45	42	34	11	3	1	0	0	**151**
23:45 - 23:59	0	0	0	0	1	4	7	24	42	23	8	1	1	0	0	**111**
Totals	**53**	**233**	**300**	**712**	**1757**	**2165**	**4256**	**5503**	**3895**	**1638**	**507**	**137**	**51**	**14**	**9**	**21230**
Percent of Total	**0.2**	**1.1**	**1.4**	**3.4**	**8.3**	**10.2**	**20.0**	**25.9**	**18.3**	**7.7**	**2.4**	**0.6**	**0.2**	**0.1**	**0.0**	**100**
Percent of AM	**0.0**	**0.1**	**0.2**	**1.5**	**5.6**	**8.1**	**18.8**	**28.1**	**22.2**	**10.4**	**3.4**	**1.0**	**0.4**	**0.1**	**0.0**	**100**
Percent of PM	**0.4**	**1.8**	**2.3**	**4.7**	**10.2**	**11.7**	**20.9**	**24.4**	**15.6**	**5.8**	**1.6**	**0.4**	**0.1**	**0.1**	**0.0**	**100**

Daily Westbound Speeds (MPH)

Study Date: Thursday, 10/18/2018
Unit ID: 0208
Location: SW 40TH ST / E OF SW 70TH AVE

Standard Deviation:	9.4 MPH	Ten Mile Pace:	30 to 39 MPH	85th Percentile:	44.7 MPH
Mean Speed:	35.6 MPH	Percent in Ten Mile Pace:	46.0%	15th Percentile:	25.4 MPH
Median Speed:	36.2 MPH			90th Percentile:	45.9 MPH
Modal Speed:	38.0 MPH			95th Percentile:	49.7 MPH

Daily Eastbound Speeds (MPH)

Study Date: Tuesday, 09/18/2018
Unit ID: 0070
Location: N WATERWAY DR / W OF SW 69TH AV

	0-5	5-10	10-15	15-20	20-25	25-30	30-35	35-40	40-45	45-50	50-55	55-60	60-65	65-70	70-75	Total
00:00 - 00:14	0	0	0	0	1	0	0	1	0	0	0	0	0	0	0	**2**
00:15 - 00:29	0	0	0	0	0	2	0	0	0	0	0	0	0	0	0	**2**
00:30 - 00:44	0	0	0	0	1	1	1	0	0	0	0	0	0	0	0	**3**
00:45 - 00:59	0	0	0	0	1	1	0	0	0	0	0	0	0	0	0	**2**
01:00 - 01:14	0	0	0	0	2	0	0	0	0	0	0	0	0	0	0	**2**
01:15 - 01:29	0	0	0	0	0	2	1	0	0	0	0	0	0	0	0	**3**
01:30 - 01:44	0	0	0	0	2	0	0	0	0	0	0	0	0	0	0	**2**
01:45 - 01:59	0	0	0	0	1	0	0	0	0	0	0	0	0	0	0	**1**
02:00 - 02:14	0	0	0	0	1	1	0	0	0	0	0	0	0	0	0	**2**
02:15 - 02:29	0	0	0	0	0	0	0	0	0	0	0	0	0	0	0	**0**
02:30 - 02:44	0	0	0	0	0	0	0	0	0	0	0	0	0	0	0	**0**
02:45 - 02:59	0	0	0	0	0	0	0	0	0	0	0	0	0	0	0	**0**
03:00 - 03:14	0	0	0	0	0	1	0	0	0	0	0	0	0	0	0	**1**
03:15 - 03:29	0	0	0	0	0	0	0	0	0	0	0	0	0	0	0	**0**
03:30 - 03:44	0	0	0	0	0	1	0	0	0	0	0	0	0	0	0	**1**
03:45 - 03:59	0	0	0	0	0	0	0	0	0	0	0	0	0	0	0	**0**
04:00 - 04:14	0	0	0	0	0	0	0	0	0	0	0	0	0	0	0	**0**
04:15 - 04:29	0	0	0	0	0	1	0	0	0	0	0	0	0	0	0	**1**
04:30 - 04:44	0	0	0	0	0	0	0	1	0	0	0	0	0	0	0	**1**
04:45 - 04:59	0	0	0	0	0	0	1	0	0	0	0	0	0	0	0	**1**
05:00 - 05:14	0	0	0	0	3	0	0	0	0	0	0	0	0	0	0	**3**
05:15 - 05:29	0	0	0	0	1	0	1	0	0	0	0	0	0	0	0	**2**
05:30 - 05:44	0	0	0	0	2	2	1	0	0	0	0	0	0	0	0	**5**
05:45 - 05:59	0	0	1	0	2	3	0	0	0	0	0	0	0	0	0	**6**
06:00 - 06:14	0	1	0	0	3	5	2	0	0	0	0	0	0	0	0	**11**
06:15 - 06:29	0	0	0	0	5	3	3	0	0	0	0	0	0	0	0	**11**
06:30 - 06:44	0	0	2	0	5	21	4	0	0	0	0	0	0	0	0	**32**
06:45 - 06:59	0	0	0	0	15	22	6	2	0	0	0	0	0	0	0	**45**
07:00 - 07:14	0	0	1	1	21	34	14	0	0	0	0	0	0	0	0	**71**
07:15 - 07:29	0	0	0	1	23	55	17	3	0	0	0	0	0	0	0	**99**
07:30 - 07:44	0	0	0	2	42	62	19	1	0	0	0	0	0	0	0	**126**
07:45 - 07:59	0	2	2	2	36	79	28	0	0	0	0	0	0	0	0	**149**
08:00 - 08:14	0	0	4	11	37	86	29	0	0	0	0	0	0	0	0	**167**
08:15 - 08:29	0	1	6	4	47	80	33	0	0	0	0	0	0	0	0	**171**
08:30 - 08:44	0	1	1	2	46	75	16	3	0	0	0	0	0	0	0	**144**
08:45 - 08:59	0	0	0	0	28	61	26	1	0	0	0	0	0	0	0	**116**
09:00 - 09:14	0	0	3	1	15	58	9	1	0	0	0	0	0	0	0	**87**
09:15 - 09:29	0	0	0	1	15	38	6	0	0	0	0	0	0	0	0	**60**
09:30 - 09:44	0	0	2	2	14	16	5	0	0	0	0	0	0	0	0	**39**
09:45 - 09:59	0	0	1	3	2	24	14	3	0	0	0	0	0	0	0	**47**
10:00 - 10:14	0	1	2	1	15	19	2	0	0	0	0	0	0	0	0	**40**
10:15 - 10:29	1	1	0	1	11	27	5	2	0	0	0	0	0	0	0	**48**
10:30 - 10:44	0	0	1	3	6	21	4	1	0	0	0	0	0	0	0	**36**
10:45 - 10:59	0	0	0	3	11	12	4	0	0	0	0	0	0	0	0	**30**
11:00 - 11:14	1	2	1	5	14	11	2	0	0	0	0	0	0	0	0	**36**
11:15 - 11:29	0	0	0	2	9	25	6	0	0	0	0	0	0	0	0	**42**
11:30 - 11:44	0	1	1	0	11	15	4	1	0	0	0	0	0	0	0	**33**
11:45 - 11:59	0	0	0	2	9	17	5	0	0	0	0	0	0	0	0	**33**
12:00 - 12:14	0	0	0	2	11	14	5	1	0	0	0	0	0	0	0	**33**
12:15 - 12:29	0	0	0	2	14	28	5	0	0	0	0	0	0	0	0	**49**
12:30 - 12:44	0	0	2	6	19	15	0	0	0	0	0	0	0	0	0	**42**

Daily Eastbound Speeds (MPH)

Study Date: Tuesday, 09/18/2018
Unit ID: 0070
Location: N WATERWAY DR / W OF SW 69TH AV

	0-5	5-10	10-15	15-20	20-25	25-30	30-35	35-40	40-45	45-50	50-55	55-60	60-65	65-70	70-75	Total
12:45 - 12:59	0	0	1	4	21	22	2	0	0	0	0	0	0	0	0	**50**
13:00 - 13:14	0	0	0	2	30	11	0	0	0	0	0	0	0	0	0	**43**
13:15 - 13:29	0	0	1	1	18	11	2	0	0	0	0	0	0	0	0	**33**
13:30 - 13:44	0	0	0	3	15	10	4	1	0	0	0	0	0	0	0	**33**
13:45 - 13:59	0	0	2	4	7	18	3	1	0	0	0	0	0	0	0	**35**
14:00 - 14:14	0	0	0	1	15	22	5	0	0	0	0	0	0	0	0	**43**
14:15 - 14:29	0	0	1	1	15	17	9	0	0	0	0	0	0	0	0	**43**
14:30 - 14:44	0	1	0	4	13	21	11	0	1	0	0	0	0	0	0	**51**
14:45 - 14:59	0	2	1	0	9	23	8	0	0	0	0	0	0	0	0	**43**
15:00 - 15:14	0	0	1	0	16	23	4	1	0	0	0	0	0	0	0	**45**
15:15 - 15:29	0	0	0	3	16	17	6	0	0	0	0	0	0	0	0	**42**
15:30 - 15:44	0	2	1	3	23	8	1	0	0	0	0	0	0	0	0	**38**
15:45 - 15:59	0	0	0	10	26	7	3	0	0	0	0	0	0	0	0	**46**
16:00 - 16:14	0	0	0	10	25	18	2	0	0	0	0	0	0	0	0	**55**
16:15 - 16:29	0	0	2	16	23	16	0	0	0	0	0	0	0	0	0	**57**
16:30 - 16:44	0	0	2	10	33	12	2	0	0	0	0	0	0	0	0	**59**
16:45 - 16:59	0	3	3	9	22	7	4	0	0	0	0	0	0	0	0	**48**
17:00 - 17:14	0	0	1	18	36	15	0	0	0	0	0	0	0	0	0	**70**
17:15 - 17:29	0	0	5	12	28	13	2	0	0	0	0	0	0	0	0	**60**
17:30 - 17:44	0	0	1	9	44	8	1	0	0	0	0	0	0	0	0	**63**
17:45 - 17:59	0	1	2	13	21	4	1	0	0	0	0	0	0	0	0	**42**
18:00 - 18:14	0	0	2	7	21	6	1	0	0	0	0	0	0	0	0	**37**
18:15 - 18:29	0	0	3	5	14	22	0	0	0	0	0	0	0	0	0	**44**
18:30 - 18:44	0	1	1	5	18	15	2	0	0	0	0	0	0	0	0	**42**
18:45 - 18:59	0	0	0	2	14	19	2	0	0	0	0	0	0	0	0	**37**
19:00 - 19:14	0	0	0	1	14	20	0	0	0	0	0	0	0	0	0	**35**
19:15 - 19:29	0	0	1	1	22	12	4	1	0	0	0	0	0	0	0	**41**
19:30 - 19:44	0	0	1	1	21	11	1	1	0	0	0	0	0	0	0	**36**
19:45 - 19:59	0	1	0	2	23	16	1	0	0	0	0	0	0	0	0	**43**
20:00 - 20:14	0	0	1	4	23	16	3	1	0	0	0	0	0	0	0	**48**
20:15 - 20:29	0	0	1	3	19	18	4	0	0	0	0	0	0	0	0	**45**
20:30 - 20:44	0	0	1	0	13	13	2	0	0	0	0	0	0	0	0	**29**
20:45 - 20:59	0	0	1	3	10	13	3	0	0	0	0	0	0	0	0	**30**
21:00 - 21:14	0	0	0	6	15	8	1	0	0	0	0	0	0	0	0	**30**
21:15 - 21:29	0	0	0	4	14	8	3	0	0	0	0	0	0	0	0	**29**
21:30 - 21:44	0	0	0	0	10	5	2	0	0	0	0	0	0	0	0	**17**
21:45 - 21:59	0	0	0	0	4	3	2	0	0	0	0	0	0	0	0	**9**
22:00 - 22:14	0	0	0	0	10	4	2	0	0	0	0	0	0	0	0	**16**
22:15 - 22:29	0	0	0	0	2	5	0	0	0	0	0	0	0	0	0	**7**
22:30 - 22:44	0	0	0	0	5	4	0	0	0	0	0	0	0	0	0	**9**
22:45 - 22:59	0	0	0	1	4	8	1	0	0	0	0	0	0	0	0	**14**
23:00 - 23:14	0	0	0	0	7	0	1	0	0	0	0	0	0	0	0	**8**
23:15 - 23:29	0	0	0	0	0	1	0	0	0	0	0	0	0	0	0	**1**
23:30 - 23:44	0	0	0	0	2	4	0	0	0	0	0	0	0	0	0	**6**
23:45 - 23:59	0	0	0	0	0	0	1	0	0	0	0	0	0	0	0	**1**
Totals	**2**	**21**	**66**	**235**	**1242**	**1472**	**384**	**27**	**1**	**0**	**0**	**0**	**0**	**0**	**0**	**3450**
Percent of Total	**0.1**	**0.6**	**1.9**	**6.8**	**36.0**	**42.7**	**11.1**	**0.8**	**0.0**	**0.0**	**0.0**	**0.0**	**0.0**	**0.0**	**0.0**	**100**
Percent of AM	**0.1**	**0.6**	**1.6**	**2.7**	**26.7**	**51.4**	**15.6**	**1.2**	**0.0**	**0.0**	**0.0**	**0.0**	**0.0**	**0.0**	**0.0**	**100**
Percent of PM	**0.0**	**0.6**	**2.2**	**10.8**	**45.2**	**34.0**	**6.7**	**0.4**	**0.1**	**0.0**	**0.0**	**0.0**	**0.0**	**0.0**	**0.0**	**100**

Daily Eastbound Speeds (MPH)

Study Date: Tuesday, 09/18/2018
Unit ID: 0070
Location: N WATERWAY DR / W OF SW 69TH AV

Standard Deviation:	4.9 MPH	Ten Mile Pace:	20 to 29 MPH	85th Percentile:	30.6 MPH
Mean Speed:	25.7 MPH	Percent in Ten Mile Pace:	78.7%	15th Percentile:	20.9 MPH
Median Speed:	25.6 MPH			90th Percentile:	31.0 MPH
Modal Speed:	28.0 MPH			95th Percentile:	33.7 MPH

Daily Eastbound Speeds (MPH)

Study Date: Wednesday, 09/19/2018
Unit ID: 0070
Location: N WATERWAY DR / W OF SW 69TH AV

	0-5	5-10	10-15	15-20	20-25	25-30	30-35	35-40	40-45	45-50	50-55	55-60	60-65	65-70	70-75	Total
00:00 - 00:14	0	0	0	0	9	0	0	0	0	0	0	0	0	0	0	**9**
00:15 - 00:29	0	0	0	0	1	1	0	0	0	0	0	0	0	0	0	**2**
00:30 - 00:44	0	0	0	0	1	1	0	2	0	0	0	0	0	0	0	**4**
00:45 - 00:59	0	0	0	0	0	1	0	0	0	0	0	0	0	0	0	**1**
01:00 - 01:14	0	0	0	0	1	2	0	0	0	0	0	0	0	0	0	**3**
01:15 - 01:29	0	0	0	0	2	1	0	0	0	0	0	0	0	0	0	**3**
01:30 - 01:44	0	0	0	0	1	0	0	0	0	0	0	0	0	0	0	**1**
01:45 - 01:59	0	0	0	0	0	1	0	0	0	0	0	0	0	0	0	**1**
02:00 - 02:14	0	0	0	0	1	0	0	0	0	0	0	0	0	0	0	**1**
02:15 - 02:29	0	0	0	0	0	0	0	0	0	0	0	0	0	0	0	**0**
02:30 - 02:44	0	0	0	0	1	1	0	0	0	0	0	0	0	0	0	**2**
02:45 - 02:59	0	0	0	0	1	0	0	0	0	0	0	0	0	0	0	**1**
03:00 - 03:14	0	0	0	0	0	0	0	0	0	0	0	0	0	0	0	**0**
03:15 - 03:29	0	0	0	0	1	2	0	0	0	0	0	0	0	0	0	**3**
03:30 - 03:44	0	0	0	0	0	0	0	0	0	0	0	0	0	0	0	**0**
03:45 - 03:59	0	0	0	0	0	1	0	0	0	0	0	0	0	0	0	**1**
04:00 - 04:14	0	0	0	0	0	0	0	0	0	0	0	0	0	0	0	**0**
04:15 - 04:29	0	0	0	0	0	1	0	0	0	0	0	0	0	0	0	**1**
04:30 - 04:44	0	0	0	0	0	0	0	0	0	0	0	0	0	0	0	**0**
04:45 - 04:59	0	0	0	0	0	1	1	0	0	0	0	0	0	0	0	**2**
05:00 - 05:14	0	0	0	0	0	1	0	0	0	0	0	0	0	0	0	**1**
05:15 - 05:29	0	0	0	0	1	1	2	0	0	0	0	0	0	0	0	**4**
05:30 - 05:44	0	0	0	0	1	2	1	0	0	0	0	0	0	0	0	**4**
05:45 - 05:59	0	0	0	0	1	2	2	0	0	0	0	0	0	0	0	**5**
06:00 - 06:14	0	1	0	0	4	3	1	0	0	0	0	0	0	0	0	**9**
06:15 - 06:29	0	0	1	2	7	8	1	0	0	0	0	0	0	0	0	**19**
06:30 - 06:44	0	0	0	1	6	11	1	1	0	0	0	0	0	0	0	**20**
06:45 - 06:59	0	0	0	0	11	13	9	0	0	0	0	0	0	0	0	**33**
07:00 - 07:14	0	0	0	1	16	43	11	0	0	0	0	0	0	0	0	**71**
07:15 - 07:29	0	0	0	4	19	39	13	0	0	0	0	0	0	0	0	**75**
07:30 - 07:44	0	0	2	6	21	51	24	1	0	0	0	0	0	0	0	**105**
07:45 - 07:59	0	0	0	2	33	79	11	0	1	0	0	0	0	0	0	**126**
08:00 - 08:14	0	1	0	0	33	66	20	2	0	0	0	0	0	0	0	**122**
08:15 - 08:29	0	0	0	1	26	66	22	1	0	0	0	0	0	0	0	**116**
08:30 - 08:44	0	0	1	2	31	64	18	1	0	0	0	0	0	0	0	**117**
08:45 - 08:59	0	1	0	5	31	39	10	4	0	0	0	0	0	0	0	**90**
09:00 - 09:14	0	1	2	9	34	21	2	0	0	0	0	0	0	0	0	**69**
09:15 - 09:29	0	1	1	9	17	10	1	0	0	0	0	0	0	0	0	**39**
09:30 - 09:44	0	0	3	7	24	17	1	0	0	0	0	0	0	0	0	**52**
09:45 - 09:59	0	0	1	7	32	21	1	0	0	0	0	0	0	0	0	**62**
10:00 - 10:14	0	0	1	4	23	13	0	0	0	0	0	0	0	0	0	**41**
10:15 - 10:29	0	0	0	4	22	12	2	0	0	0	0	0	0	0	0	**40**
10:30 - 10:44	0	0	0	1	27	19	5	0	0	0	0	0	0	0	0	**52**
10:45 - 10:59	0	0	0	8	16	17	0	0	0	0	0	0	0	0	0	**41**
11:00 - 11:14	0	0	1	2	17	13	4	0	0	0	0	0	0	0	0	**37**
11:15 - 11:29	0	1	2	1	17	20	2	0	0	0	0	0	0	0	0	**43**
11:30 - 11:44	0	0	1	3	10	14	0	0	0	0	0	0	0	0	0	**28**
11:45 - 11:59	0	0	0	2	24	13	3	0	0	0	0	0	0	0	0	**42**
12:00 - 12:14	0	0	0	3	16	18	4	0	0	0	0	0	0	0	0	**41**
12:15 - 12:29	0	0	0	1	10	26	8	1	1	0	0	0	0	0	0	**47**
12:30 - 12:44	0	0	0	1	16	20	7	1	0	0	0	0	0	0	0	**45**

Daily Eastbound Speeds (MPH)

Study Date: Wednesday, 09/19/2018
Unit ID: 0070
Location: N WATERWAY DR / W OF SW 69TH AV

	0-5	5-10	10-15	15-20	20-25	25-30	30-35	35-40	40-45	45-50	50-55	55-60	60-65	65-70	70-75	Total
12:45 - 12:59	0	0	1	1	16	30	4	0	0	0	0	0	0	0	0	**52**
13:00 - 13:14	0	2	0	2	20	29	5	0	0	0	0	0	0	0	0	**58**
13:15 - 13:29	0	0	1	1	15	28	6	2	0	0	0	0	0	0	0	**53**
13:30 - 13:44	0	0	2	2	6	10	3	3	0	0	0	0	0	0	0	**26**
13:45 - 13:59	0	0	1	4	12	24	5	0	0	0	0	0	0	0	0	**46**
14:00 - 14:14	0	2	3	2	11	19	2	1	0	0	0	0	0	0	0	**40**
14:15 - 14:29	0	0	1	3	18	15	7	0	0	0	0	0	0	0	0	**44**
14:30 - 14:44	0	0	3	2	13	13	7	0	0	0	0	0	0	0	0	**38**
14:45 - 14:59	0	0	0	8	25	20	2	0	0	0	0	0	0	0	0	**55**
15:00 - 15:14	0	1	0	3	21	18	3	0	0	0	0	0	0	0	0	**46**
15:15 - 15:29	0	1	1	4	13	17	4	0	0	0	0	0	0	0	0	**40**
15:30 - 15:44	0	0	2	3	10	28	1	1	0	0	0	0	0	0	0	**45**
15:45 - 15:59	0	0	0	0	15	20	7	0	0	0	0	0	0	0	0	**42**
16:00 - 16:14	0	0	2	5	24	23	3	1	0	0	0	0	0	0	0	**58**
16:15 - 16:29	0	0	1	4	29	15	2	0	0	0	0	0	0	0	0	**51**
16:30 - 16:44	0	0	0	2	20	17	8	0	0	0	0	0	0	0	0	**47**
16:45 - 16:59	0	1	0	0	16	21	7	0	0	0	0	0	0	0	0	**45**
17:00 - 17:14	0	1	1	3	14	14	2	0	0	0	0	0	0	0	0	**35**
17:15 - 17:29	0	0	0	2	18	29	6	0	0	0	0	0	0	0	0	**55**
17:30 - 17:44	0	0	1	3	19	32	3	0	0	0	0	0	0	0	0	**58**
17:45 - 17:59	0	0	1	8	17	23	7	0	0	0	0	0	0	0	0	**56**
18:00 - 18:14	0	0	0	6	20	17	3	0	0	0	0	0	0	0	0	**46**
18:15 - 18:29	0	0	0	2	10	29	4	0	0	0	0	0	0	0	0	**45**
18:30 - 18:44	0	1	1	2	25	24	2	0	0	0	0	0	0	0	0	**55**
18:45 - 18:59	0	1	0	1	11	14	9	1	0	0	0	0	0	0	0	**37**
19:00 - 19:14	0	0	0	3	14	19	6	0	0	0	0	0	0	0	0	**42**
19:15 - 19:29	0	0	1	1	18	16	5	0	0	0	0	0	0	0	0	**41**
19:30 - 19:44	0	0	1	1	15	9	2	0	0	0	0	0	0	0	0	**28**
19:45 - 19:59	0	1	0	3	12	21	3	1	0	0	0	0	0	0	0	**41**
20:00 - 20:14	0	0	1	2	15	11	3	0	0	0	0	0	0	0	0	**32**
20:15 - 20:29	0	0	1	4	19	8	4	0	0	0	0	0	0	0	0	**36**
20:30 - 20:44	0	0	1	1	13	6	3	0	0	0	0	0	0	0	0	**24**
20:45 - 20:59	0	0	0	2	12	14	2	0	0	0	0	0	0	0	0	**30**
21:00 - 21:14	0	0	1	0	8	9	2	0	0	0	0	0	0	0	0	**20**
21:15 - 21:29	0	0	0	0	11	11	4	0	0	0	0	0	0	0	0	**26**
21:30 - 21:44	0	0	0	1	6	17	0	0	0	0	0	0	0	0	0	**24**
21:45 - 21:59	0	0	0	4	4	7	2	0	0	0	0	0	0	0	0	**17**
22:00 - 22:14	0	0	0	2	6	12	1	1	0	0	0	0	0	0	0	**22**
22:15 - 22:29	0	0	0	1	1	3	1	0	0	0	0	0	0	0	0	**6**
22:30 - 22:44	0	0	2	1	2	4	2	0	0	0	0	0	0	0	0	**11**
22:45 - 22:59	0	0	0	0	2	3	1	0	0	0	0	0	0	0	0	**6**
23:00 - 23:14	0	0	0	1	3	4	2	0	0	0	0	0	0	0	0	**10**
23:15 - 23:29	0	0	0	0	5	4	0	0	0	0	0	0	0	0	0	**9**
23:30 - 23:44	0	0	0	0	2	3	0	0	0	0	0	0	0	0	0	**5**
23:45 - 23:59	0	0	0	0	1	2	1	0	0	0	0	0	0	0	0	**4**
Totals	**0**	**17**	**46**	**186**	**1152**	**1467**	**343**	**25**	**2**	**0**	**0**	**0**	**0**	**0**	**0**	**3238**
Percent of Total	**0.0**	**0.5**	**1.4**	**5.7**	**35.6**	**45.3**	**10.6**	**0.8**	**0.1**	**0.0**	**0.0**	**0.0**	**0.0**	**0.0**	**0.0**	**100**
Percent of AM	**0.0**	**0.4**	**1.1**	**5.4**	**34.9**	**46.1**	**11.2**	**0.8**	**0.1**	**0.0**	**0.0**	**0.0**	**0.0**	**0.0**	**0.0**	**100**
Percent of PM	**0.0**	**0.6**	**1.7**	**6.0**	**36.1**	**44.6**	**10.1**	**0.7**	**0.1**	**0.0**	**0.0**	**0.0**	**0.0**	**0.0**	**0.0**	**100**

Daily Eastbound Speeds (MPH)

Study Date: Wednesday, 09/19/2018
Unit ID: 0070
Location: N WATERWAY DR / W OF SW 69TH AV

Standard Deviation:	4.7 MPH	Ten Mile Pace:	20 to 29 MPH	85th Percentile:	30.5 MPH
Mean Speed:	25.9 MPH	Percent in Ten Mile Pace:	80.9%	15th Percentile:	21.2 MPH
Median Speed:	25.9 MPH			90th Percentile:	30.8 MPH
Modal Speed:	28.0 MPH			95th Percentile:	33.6 MPH

Daily Eastbound Speeds (MPH)

Study Date: Thursday, 09/20/2018
Unit ID: 0070
Location: N WATERWAY DR / W OF SW 69TH AV

	0-5	5-10	10-15	15-20	20-25	25-30	30-35	35-40	40-45	45-50	50-55	55-60	60-65	65-70	70-75	Total
00:00 - 00:14	0	0	0	1	1	0	0	0	0	0	0	0	0	0	0	**2**
00:15 - 00:29	0	0	0	0	1	0	0	0	0	0	0	0	0	0	0	**1**
00:30 - 00:44	0	0	0	0	2	2	0	1	0	0	0	0	0	0	0	**5**
00:45 - 00:59	0	0	0	0	0	0	0	0	0	0	0	0	0	0	0	**0**
01:00 - 01:14	0	0	0	0	0	1	1	0	0	0	0	0	0	0	0	**2**
01:15 - 01:29	0	0	0	0	2	2	0	0	0	0	0	0	0	0	0	**4**
01:30 - 01:44	0	0	0	0	0	0	0	0	0	0	0	0	0	0	0	**0**
01:45 - 01:59	0	0	0	0	0	0	0	0	0	0	0	0	0	0	0	**0**
02:00 - 02:14	0	0	0	0	0	0	0	0	0	0	0	0	0	0	0	**0**
02:15 - 02:29	0	0	0	0	0	0	1	0	0	0	0	0	0	0	0	**1**
02:30 - 02:44	0	0	0	0	0	0	0	0	0	0	0	0	0	0	0	**0**
02:45 - 02:59	0	0	0	0	0	0	0	0	0	0	0	0	0	0	0	**0**
03:00 - 03:14	0	0	0	0	1	1	0	0	0	0	0	0	0	0	0	**2**
03:15 - 03:29	0	0	0	0	0	0	0	0	0	0	0	0	0	0	0	**0**
03:30 - 03:44	0	0	0	0	0	1	0	0	0	0	0	0	0	0	0	**1**
03:45 - 03:59	0	0	0	0	1	1	0	0	0	0	0	0	0	0	0	**2**
04:00 - 04:14	0	0	0	0	0	0	0	0	0	0	0	0	0	0	0	**0**
04:15 - 04:29	0	0	0	0	0	0	0	0	0	0	0	0	0	0	0	**0**
04:30 - 04:44	0	0	0	0	0	0	0	0	0	0	0	0	0	0	0	**0**
04:45 - 04:59	0	0	0	0	1	0	1	0	0	0	0	0	0	0	0	**2**
05:00 - 05:14	0	0	0	0	0	0	0	0	0	0	0	0	0	0	0	**0**
05:15 - 05:29	0	0	0	0	1	2	0	0	0	0	0	0	0	0	0	**3**
05:30 - 05:44	0	0	0	0	2	2	0	0	0	0	0	0	0	0	0	**4**
05:45 - 05:59	0	0	0	0	3	3	0	0	0	0	0	0	0	0	0	**6**
06:00 - 06:14	0	0	0	0	1	4	2	0	0	0	0	0	0	0	0	**7**
06:15 - 06:29	0	1	0	0	8	9	1	0	0	0	0	0	0	0	0	**19**
06:30 - 06:44	0	0	0	0	10	20	3	1	0	0	0	0	0	0	0	**34**
06:45 - 06:59	0	0	0	0	8	18	6	0	0	0	0	0	0	0	0	**32**
07:00 - 07:14	0	1	0	0	14	51	13	0	0	0	0	0	0	0	0	**79**
07:15 - 07:29	0	0	1	3	22	41	22	1	0	0	0	0	0	0	0	**90**
07:30 - 07:44	0	1	0	4	43	65	16	0	0	0	0	0	0	0	0	**129**
07:45 - 07:59	0	0	0	3	39	75	19	1	0	0	0	0	0	0	0	**137**
08:00 - 08:14	0	0	1	4	50	106	19	0	0	0	0	0	0	0	0	**180**
08:15 - 08:29	0	1	0	4	51	98	18	1	0	0	0	0	0	0	0	**173**
08:30 - 08:44	0	2	2	4	30	76	26	0	0	0	0	0	0	0	0	**140**
08:45 - 08:59	0	1	1	4	40	51	22	0	0	0	0	0	0	0	0	**119**
09:00 - 09:14	0	0	1	2	12	36	21	0	0	0	0	0	0	0	0	**72**
09:15 - 09:29	0	0	2	0	12	28	12	1	0	0	0	0	0	0	0	**55**
09:30 - 09:44	0	0	0	2	12	19	6	2	0	0	0	0	0	0	0	**41**
09:45 - 09:59	0	0	1	1	10	27	9	3	0	0	0	0	0	0	0	**51**
10:00 - 10:14	0	1	1	2	18	20	4	0	0	0	0	0	0	0	0	**46**
10:15 - 10:29	0	0	0	2	12	13	8	0	0	0	0	0	0	0	0	**35**
10:30 - 10:44	0	0	0	2	12	19	11	1	0	0	0	0	0	0	0	**45**
10:45 - 10:59	0	0	0	0	14	17	3	0	0	0	0	0	0	0	0	**34**
11:00 - 11:14	0	0	1	4	13	23	5	0	0	0	0	0	0	0	0	**46**
11:15 - 11:29	0	0	0	3	15	25	6	0	0	0	0	0	0	0	0	**49**
11:30 - 11:44	0	0	1	0	19	15	6	0	0	0	0	0	0	0	0	**41**
11:45 - 11:59	0	1	0	1	11	19	3	0	0	0	0	0	0	0	0	**35**
12:00 - 12:14	0	0	1	0	11	15	4	1	0	0	0	0	0	0	0	**32**
12:15 - 12:29	0	0	0	0	18	19	5	1	0	0	0	0	0	0	0	**43**
12:30 - 12:44	0	0	1	2	19	16	1	0	0	0	0	0	0	0	0	**39**

Daily Eastbound Speeds (MPH)

Study Date: Thursday, 09/20/2018
Unit ID: 0070
Location: N WATERWAY DR / W OF SW 69TH AV

	0-5	5-10	10-15	15-20	20-25	25-30	30-35	35-40	40-45	45-50	50-55	55-60	60-65	65-70	70-75	Total
12:45 - 12:59	0	0	1	5	16	20	7	0	0	0	0	0	0	0	0	**49**
13:00 - 13:14	0	0	0	1	15	16	8	1	0	0	0	0	0	0	0	**41**
13:15 - 13:29	0	2	0	3	18	18	3	0	0	0	0	0	0	0	0	**44**
13:30 - 13:44	0	0	0	3	32	7	2	1	0	0	0	0	0	0	0	**45**
13:45 - 13:59	0	0	2	6	7	14	5	0	0	0	0	0	0	0	0	**34**
14:00 - 14:14	0	0	0	2	15	18	5	0	0	0	0	0	0	0	0	**40**
14:15 - 14:29	0	1	1	1	20	30	5	0	0	0	0	0	0	0	0	**58**
14:30 - 14:44	0	0	0	1	13	20	5	0	0	0	0	0	0	0	0	**39**
14:45 - 14:59	0	0	3	3	11	25	5	0	0	0	0	0	0	0	0	**47**
15:00 - 15:14	0	1	2	2	18	26	6	0	0	0	0	0	0	0	0	**55**
15:15 - 15:29	0	0	2	5	12	27	5	1	0	0	0	0	0	0	0	**52**
15:30 - 15:44	0	1	1	1	16	20	6	0	0	0	0	0	0	0	0	**45**
15:45 - 15:59	0	0	0	1	17	21	6	2	0	0	0	0	0	0	0	**47**
16:00 - 16:14	0	0	0	3	24	37	7	1	0	0	0	0	0	0	0	**72**
16:15 - 16:29	0	0	0	3	19	24	1	1	0	0	0	0	0	0	0	**48**
16:30 - 16:44	0	1	1	8	12	23	4	0	0	0	0	0	0	0	0	**49**
16:45 - 16:59	0	1	2	7	11	10	2	1	0	0	0	0	0	0	0	**34**
17:00 - 17:14	0	0	1	12	27	19	1	0	0	0	0	0	0	0	0	**60**
17:15 - 17:29	0	0	1	1	30	22	3	0	0	0	0	0	0	0	0	**57**
17:30 - 17:44	0	0	0	4	14	33	4	0	0	0	0	0	0	0	0	**55**
17:45 - 17:59	0	0	1	0	15	31	3	0	0	0	0	0	0	0	0	**50**
18:00 - 18:14	0	1	1	4	23	27	5	1	0	0	0	0	0	0	0	**62**
18:15 - 18:29	0	0	1	4	18	29	3	0	0	0	0	0	0	0	0	**55**
18:30 - 18:44	0	0	2	2	22	17	6	1	0	0	0	0	0	0	0	**50**
18:45 - 18:59	0	0	0	1	17	22	3	0	0	0	0	0	0	0	0	**43**
19:00 - 19:14	0	0	0	1	13	22	4	0	0	0	0	0	0	0	0	**40**
19:15 - 19:29	0	0	1	3	16	14	1	0	0	0	0	0	0	0	0	**35**
19:30 - 19:44	0	0	0	7	18	9	4	0	0	0	0	0	0	0	0	**38**
19:45 - 19:59	0	0	0	6	19	8	2	0	0	0	0	0	0	0	0	**35**
20:00 - 20:14	0	0	0	0	18	7	3	1	0	0	0	0	0	0	0	**29**
20:15 - 20:29	0	0	1	1	11	13	5	0	0	0	0	0	0	0	0	**31**
20:30 - 20:44	0	0	0	0	18	11	2	0	0	0	0	0	0	0	0	**31**
20:45 - 20:59	0	0	0	1	4	9	4	0	0	0	0	0	0	0	0	**18**
21:00 - 21:14	0	0	0	3	3	6	3	1	0	0	0	0	0	0	0	**16**
21:15 - 21:29	0	0	1	4	8	14	1	0	0	0	0	0	0	0	0	**28**
21:30 - 21:44	0	0	0	1	6	5	0	0	0	0	0	0	0	0	0	**12**
21:45 - 21:59	0	0	0	1	7	4	0	0	0	0	0	0	0	0	0	**12**
22:00 - 22:14	0	0	1	1	6	3	0	1	0	0	0	0	0	0	0	**12**
22:15 - 22:29	0	0	2	1	5	6	1	0	0	0	0	0	0	0	0	**15**
22:30 - 22:44	0	0	0	0	1	6	4	0	0	0	0	0	0	0	0	**11**
22:45 - 22:59	0	0	0	0	3	2	1	0	0	0	0	0	0	0	0	**6**
23:00 - 23:14	0	0	0	0	2	6	0	0	0	0	0	0	0	0	0	**8**
23:15 - 23:29	0	0	0	1	4	4	1	0	0	0	0	0	0	0	0	**10**
23:30 - 23:44	0	0	0	0	0	3	0	0	0	0	0	0	0	0	0	**3**
23:45 - 23:59	0	1	0	0	1	1	0	0	0	0	0	0	0	0	0	**3**
Totals	**0**	**18**	**42**	**162**	**1144**	**1649**	**420**	**27**	**0**	**0**	**0**	**0**	**0**	**0**	**0**	**3462**
Percent of Total	**0.0**	**0.5**	**1.2**	**4.7**	**33.0**	**47.6**	**12.1**	**0.8**	**0.0**	**0.0**	**0.0**	**0.0**	**0.0**	**0.0**	**0.0**	**100**
Percent of AM	**0.0**	**0.5**	**0.7**	**2.7**	**28.5**	**51.6**	**15.3**	**0.7**	**0.0**	**0.0**	**0.0**	**0.0**	**0.0**	**0.0**	**0.0**	**100**
Percent of PM	**0.0**	**0.5**	**1.7**	**6.7**	**37.6**	**43.7**	**9.0**	**0.9**	**0.0**	**0.0**	**0.0**	**0.0**	**0.0**	**0.0**	**0.0**	**100**

Daily Eastbound Speeds (MPH)

Study Date: Thursday, 09/20/2018
Unit ID: 0070
Location: N WATERWAY DR / W OF SW 69TH AV

Standard Deviation:	4.6 MPH	Ten Mile Pace:	20 to 29 MPH	85th Percentile:	30.7 MPH
Mean Speed:	26.3 MPH	Percent in Ten Mile Pace:	80.7%	15th Percentile:	21.6 MPH
Median Speed:	26.3 MPH			90th Percentile:	31.4 MPH
Modal Speed:	28.0 MPH			95th Percentile:	33.9 MPH

Daily Westbound Speeds (MPH)

Study Date: Tuesday, 09/18/2018
Unit ID: 0232
Location: N WATERWAY DR / W OF SW 69TH AV

	0-5	5-10	10-15	15-20	20-25	25-30	30-35	35-40	40-45	45-50	50-55	55-60	60-65	65-70	70-75	Total
00:00 - 00:14	0	0	0	0	1	0	0	0	0	0	0	0	0	0	0	**1**
00:15 - 00:29	0	0	0	1	1	0	0	0	0	0	0	0	0	0	0	**2**
00:30 - 00:44	0	0	0	0	0	1	0	0	0	0	0	0	0	0	0	**1**
00:45 - 00:59	0	0	0	1	0	0	0	0	0	0	0	0	0	0	0	**1**
01:00 - 01:14	0	0	0	0	0	0	0	0	0	0	0	0	0	0	0	**0**
01:15 - 01:29	0	0	0	0	1	0	0	0	0	0	0	0	0	0	0	**1**
01:30 - 01:44	0	0	2	0	1	1	0	0	0	0	0	0	0	0	0	**4**
01:45 - 01:59	0	0	0	0	0	0	0	0	0	0	0	0	0	0	0	**0**
02:00 - 02:14	0	0	0	0	0	0	0	0	0	0	0	0	0	0	0	**0**
02:15 - 02:29	0	0	0	0	0	0	0	0	0	0	0	0	0	0	0	**0**
02:30 - 02:44	0	0	0	0	0	0	0	0	0	0	0	0	0	0	0	**0**
02:45 - 02:59	0	0	0	0	0	0	0	0	0	0	0	0	0	0	0	**0**
03:00 - 03:14	0	0	0	0	0	0	0	0	0	0	0	0	0	0	0	**0**
03:15 - 03:29	0	0	0	0	0	1	0	0	0	0	0	0	0	0	0	**1**
03:30 - 03:44	0	0	0	1	0	0	0	0	0	0	0	0	0	0	0	**1**
03:45 - 03:59	0	0	0	0	0	0	0	0	0	0	0	0	0	0	0	**0**
04:00 - 04:14	0	0	1	0	0	0	0	0	0	0	0	0	0	0	0	**1**
04:15 - 04:29	0	0	0	0	0	0	0	0	0	0	0	0	0	0	0	**0**
04:30 - 04:44	0	0	0	0	1	0	0	0	0	0	0	0	0	0	0	**1**
04:45 - 04:59	0	0	0	1	1	1	0	0	0	0	0	0	0	0	0	**3**
05:00 - 05:14	0	0	0	1	2	1	0	0	0	0	0	0	0	0	0	**4**
05:15 - 05:29	0	0	0	1	2	1	0	0	0	0	0	0	0	0	0	**4**
05:30 - 05:44	0	0	1	0	2	1	0	0	0	0	0	0	0	0	0	**4**
05:45 - 05:59	0	0	1	1	5	4	0	0	0	0	0	0	0	0	0	**11**
06:00 - 06:14	0	0	1	4	6	0	0	0	0	0	0	0	0	0	0	**11**
06:15 - 06:29	0	0	2	1	8	4	1	0	0	0	0	0	0	0	0	**16**
06:30 - 06:44	0	0	2	5	11	0	1	0	0	0	0	0	0	0	0	**19**
06:45 - 06:59	0	0	4	8	10	4	0	0	0	0	0	0	0	0	0	**26**
07:00 - 07:14	0	0	2	11	18	2	2	0	0	0	0	0	0	0	0	**35**
07:15 - 07:29	0	0	1	23	21	4	1	0	0	0	0	0	0	0	0	**50**
07:30 - 07:44	0	0	0	18	22	5	0	0	0	0	0	0	0	0	0	**45**
07:45 - 07:59	0	0	0	17	20	9	1	0	0	0	0	0	0	0	0	**47**
08:00 - 08:14	0	0	2	18	27	8	0	0	0	0	0	0	0	0	0	**55**
08:15 - 08:29	0	0	1	15	29	5	1	0	0	0	0	0	0	0	0	**51**
08:30 - 08:44	0	0	2	21	17	5	0	0	0	0	0	0	0	0	0	**45**
08:45 - 08:59	0	0	2	21	21	10	0	0	0	0	0	0	0	0	0	**54**
09:00 - 09:14	0	0	1	11	14	5	2	0	0	0	0	0	0	0	0	**33**
09:15 - 09:29	0	2	1	12	12	4	1	0	0	0	0	0	0	0	0	**32**
09:30 - 09:44	0	0	1	10	14	6	2	0	0	0	0	0	0	0	0	**33**
09:45 - 09:59	0	0	2	11	25	3	1	0	0	0	0	0	0	0	0	**42**
10:00 - 10:14	0	0	1	14	9	0	0	0	0	0	0	0	0	0	0	**24**
10:15 - 10:29	0	0	0	12	23	4	1	0	0	0	0	0	0	0	0	**40**
10:30 - 10:44	0	0	2	18	8	4	2	0	0	0	0	0	0	0	0	**34**
10:45 - 10:59	0	0	2	17	12	3	0	0	0	0	0	0	0	0	0	**34**
11:00 - 11:14	0	0	0	14	20	3	0	0	0	0	0	0	0	0	0	**37**
11:15 - 11:29	0	0	1	21	15	5	0	0	0	0	0	0	0	0	0	**42**
11:30 - 11:44	0	0	0	12	16	1	1	0	0	0	0	0	0	0	0	**30**
11:45 - 11:59	0	0	1	11	12	4	1	0	0	0	0	0	0	0	0	**29**
12:00 - 12:14	0	0	2	12	14	5	1	0	0	0	0	0	0	0	0	**34**
12:15 - 12:29	0	0	2	13	19	5	1	0	0	0	0	0	0	0	0	**40**
12:30 - 12:44	0	0	1	15	21	1	0	0	0	0	0	0	0	0	0	**38**

Daily Westbound Speeds (MPH)

Study Date: Tuesday, 09/18/2018
Unit ID: 0232
Location: N WATERWAY DR / W OF SW 69TH AV

	0-5	5-10	10-15	15-20	20-25	25-30	30-35	35-40	40-45	45-50	50-55	55-60	60-65	65-70	70-75	Total
12:45 - 12:59	0	0	5	20	14	5	1	0	0	0	0	0	0	0	0	**45**
13:00 - 13:14	0	0	3	18	15	8	0	0	0	0	0	0	0	0	0	**44**
13:15 - 13:29	0	0	4	16	20	8	1	0	0	0	0	0	0	0	0	**49**
13:30 - 13:44	0	0	3	18	18	3	0	0	0	0	0	0	0	0	0	**42**
13:45 - 13:59	0	0	3	23	15	3	1	0	0	0	0	0	0	0	0	**45**
14:00 - 14:14	0	0	3	24	24	1	0	1	0	0	0	0	0	0	0	**53**
14:15 - 14:29	0	0	4	18	24	9	0	0	0	0	0	0	0	0	0	**55**
14:30 - 14:44	0	0	0	19	23	5	0	0	0	0	0	0	0	0	0	**47**
14:45 - 14:59	0	1	1	15	29	3	1	0	0	0	0	0	0	0	0	**50**
15:00 - 15:14	1	1	1	27	30	8	0	0	0	0	0	0	0	0	0	**68**
15:15 - 15:29	0	0	1	26	41	9	2	0	0	0	0	0	0	0	0	**79**
15:30 - 15:44	0	0	2	27	60	14	0	0	0	0	0	0	0	0	0	**103**
15:45 - 15:59	0	0	3	27	51	16	0	0	0	0	0	0	0	0	0	**97**
16:00 - 16:14	0	0	4	39	68	20	1	1	0	0	0	0	0	0	0	**133**
16:15 - 16:29	0	0	5	54	82	21	1	0	0	0	0	0	0	0	0	**163**
16:30 - 16:44	0	0	3	36	108	23	0	0	0	0	0	0	0	0	0	**170**
16:45 - 16:59	0	0	6	33	99	24	2	0	0	0	0	0	0	0	0	**164**
17:00 - 17:14	0	3	5	46	118	23	0	0	0	0	0	0	0	0	0	**195**
17:15 - 17:29	1	1	3	83	147	22	0	0	0	0	0	0	0	0	0	**257**
17:30 - 17:44	0	0	8	77	130	12	0	0	0	0	0	0	0	0	0	**227**
17:45 - 17:59	0	0	3	53	114	24	0	0	0	0	0	0	0	0	0	**194**
18:00 - 18:14	0	0	1	52	112	21	0	1	0	0	0	0	0	0	0	**187**
18:15 - 18:29	0	0	0	61	138	14	0	0	0	0	0	0	0	0	0	**213**
18:30 - 18:44	0	0	3	48	96	22	2	0	0	0	0	0	0	0	0	**171**
18:45 - 18:59	0	0	3	23	47	18	0	0	0	0	0	0	0	0	0	**91**
19:00 - 19:14	0	0	3	12	28	16	0	0	0	0	0	0	0	0	0	**59**
19:15 - 19:29	0	0	3	16	22	8	1	0	0	0	0	0	0	0	0	**50**
19:30 - 19:44	0	0	0	12	18	4	0	0	0	0	0	0	0	0	0	**34**
19:45 - 19:59	0	1	3	12	12	2	0	1	0	0	0	0	0	0	0	**31**
20:00 - 20:14	0	0	0	18	18	3	0	0	0	0	0	0	0	0	0	**39**
20:15 - 20:29	0	0	0	7	8	7	0	0	0	0	0	0	0	0	0	**22**
20:30 - 20:44	0	0	2	6	9	2	0	0	0	0	0	0	0	0	0	**19**
20:45 - 20:59	0	0	1	9	8	3	0	0	0	0	0	0	0	0	0	**21**
21:00 - 21:14	0	0	2	8	11	1	0	0	0	0	0	0	0	0	0	**22**
21:15 - 21:29	0	0	1	4	5	0	0	0	0	0	0	0	0	0	0	**10**
21:30 - 21:44	0	0	0	0	2	1	1	0	0	0	0	0	0	0	0	**4**
21:45 - 21:59	0	0	0	1	6	1	0	0	0	0	0	0	0	0	0	**8**
22:00 - 22:14	0	0	0	4	4	0	0	0	0	0	0	0	0	0	0	**8**
22:15 - 22:29	0	0	0	2	1	0	0	0	0	0	0	0	0	0	0	**3**
22:30 - 22:44	0	0	0	0	3	0	0	0	0	0	0	0	0	0	0	**3**
22:45 - 22:59	0	0	1	1	5	0	0	0	0	0	0	0	0	0	0	**7**
23:00 - 23:14	0	0	0	2	1	1	0	0	0	0	0	0	0	0	0	**4**
23:15 - 23:29	0	0	0	1	1	0	0	0	0	0	0	0	0	0	0	**2**
23:30 - 23:44	0	0	0	1	0	0	0	0	0	0	0	0	0	0	0	**1**
23:45 - 23:59	0	0	0	0	1	0	0	0	0	0	0	0	0	0	0	**1**
Totals	**2**	**9**	**134**	**1371**	**2247**	**505**	**34**	**4**	**0**	**0**	**0**	**0**	**0**	**0**	**0**	**4306**
Percent of Total	**0.0**	**0.2**	**3.1**	**31.8**	**52.2**	**11.7**	**0.8**	**0.1**	**0.0**	**0.0**	**0.0**	**0.0**	**0.0**	**0.0**	**0.0**	**100**
Percent of AM	**0.0**	**0.2**	**4.0**	**36.7**	**45.0**	**12.1**	**2.0**	**0.0**	**0.0**	**0.0**	**0.0**	**0.0**	**0.0**	**0.0**	**0.0**	**100**
Percent of PM	**0.1**	**0.2**	**2.9**	**30.5**	**54.1**	**11.6**	**0.5**	**0.1**	**0.0**	**0.0**	**0.0**	**0.0**	**0.0**	**0.0**	**0.0**	**100**

Daily Westbound Speeds (MPH)

Study Date: Tuesday, 09/18/2018
Unit ID: 0232
Location: N WATERWAY DR / W OF SW 69TH AV

Standard Deviation:	4.1 MPH	Ten Mile Pace:	15 to 24 MPH	85th Percentile:	25.7 MPH
Mean Speed:	21.7 MPH	Percent in Ten Mile Pace:	84.0%	15th Percentile:	17.2 MPH
Median Speed:	21.7 MPH			90th Percentile:	26.3 MPH
Modal Speed:	23.0 MPH			95th Percentile:	28.9 MPH

Daily Westbound Speeds (MPH)

Study Date: Wednesday, 09/19/2018
Unit ID: 0232
Location: N WATERWAY DR / W OF SW 69TH AV

	0-5	5-10	10-15	15-20	20-25	25-30	30-35	35-40	40-45	45-50	50-55	55-60	60-65	65-70	70-75	Total
00:00 - 00:14	0	0	0	0	0	0	0	0	0	0	0	0	0	0	0	**0**
00:15 - 00:29	0	0	0	1	0	0	1	0	0	0	0	0	0	0	0	**2**
00:30 - 00:44	0	0	0	0	1	0	0	0	0	0	0	0	0	0	0	**1**
00:45 - 00:59	0	0	0	0	0	0	0	0	0	0	0	0	0	0	0	**0**
01:00 - 01:14	0	0	0	0	0	0	0	0	0	0	0	0	0	0	0	**0**
01:15 - 01:29	0	0	0	1	1	0	0	0	0	0	0	0	0	0	0	**2**
01:30 - 01:44	0	0	0	0	0	0	0	0	0	0	0	0	0	0	0	**0**
01:45 - 01:59	0	0	0	0	0	0	0	0	0	0	0	0	0	0	0	**0**
02:00 - 02:14	0	0	0	0	0	0	0	0	0	0	0	0	0	0	0	**0**
02:15 - 02:29	0	0	0	0	0	0	0	0	0	0	0	0	0	0	0	**0**
02:30 - 02:44	0	0	0	0	1	0	0	0	0	0	0	0	0	0	0	**1**
02:45 - 02:59	0	0	0	0	1	0	0	0	0	0	0	0	0	0	0	**1**
03:00 - 03:14	0	0	0	0	0	0	0	0	0	0	0	0	0	0	0	**0**
03:15 - 03:29	0	0	0	1	0	0	0	0	0	0	0	0	0	0	0	**1**
03:30 - 03:44	0	0	0	0	0	0	0	0	0	0	0	0	0	0	0	**0**
03:45 - 03:59	0	0	0	0	1	0	0	0	0	0	0	0	0	0	0	**1**
04:00 - 04:14	0	0	0	1	0	0	0	0	0	0	0	0	0	0	0	**1**
04:15 - 04:29	0	0	0	0	0	0	0	0	0	0	0	0	0	0	0	**0**
04:30 - 04:44	0	0	1	1	0	0	0	0	0	0	0	0	0	0	0	**2**
04:45 - 04:59	0	0	0	2	1	0	0	0	0	0	0	0	0	0	0	**3**
05:00 - 05:14	0	0	0	1	4	0	0	0	0	0	0	0	0	0	0	**5**
05:15 - 05:29	0	0	0	0	2	0	0	0	0	0	0	0	0	0	0	**2**
05:30 - 05:44	0	0	0	1	3	1	0	0	0	0	0	0	0	0	0	**5**
05:45 - 05:59	0	0	0	2	3	2	0	0	0	0	0	0	0	0	0	**7**
06:00 - 06:14	0	0	1	1	5	1	1	0	0	0	0	0	0	0	0	**9**
06:15 - 06:29	0	0	3	2	10	2	1	0	0	0	0	0	0	0	0	**18**
06:30 - 06:44	0	0	0	7	8	2	1	0	0	0	0	0	0	0	0	**18**
06:45 - 06:59	0	0	3	13	12	1	0	0	0	0	0	0	0	0	0	**29**
07:00 - 07:14	0	0	2	15	8	1	2	0	0	0	0	0	0	0	0	**28**
07:15 - 07:29	0	0	1	9	32	4	0	0	0	0	0	0	0	0	0	**46**
07:30 - 07:44	0	0	3	15	21	3	0	0	0	0	0	0	0	0	0	**42**
07:45 - 07:59	0	0	1	21	20	5	0	0	0	0	0	0	0	0	0	**47**
08:00 - 08:14	0	0	4	16	22	9	0	0	0	0	0	0	0	0	0	**51**
08:15 - 08:29	0	0	1	15	18	8	0	0	0	0	0	0	0	0	0	**42**
08:30 - 08:44	0	0	3	15	22	7	0	0	0	0	0	0	0	0	0	**47**
08:45 - 08:59	0	0	3	17	17	5	0	0	0	0	0	0	0	0	0	**42**
09:00 - 09:14	0	0	2	10	17	5	2	0	0	0	0	0	0	0	0	**36**
09:15 - 09:29	0	0	2	8	16	1	0	0	0	0	0	0	0	0	0	**27**
09:30 - 09:44	0	0	2	13	24	2	0	0	0	0	0	0	0	0	0	**41**
09:45 - 09:59	0	0	5	16	15	3	0	0	0	0	0	0	0	0	0	**39**
10:00 - 10:14	0	0	2	20	12	2	0	0	0	0	0	0	0	0	0	**36**
10:15 - 10:29	0	0	1	14	13	5	0	0	0	0	0	0	0	0	0	**33**
10:30 - 10:44	0	0	2	13	14	2	1	0	0	0	0	0	0	0	0	**32**
10:45 - 10:59	0	0	4	19	15	4	1	0	0	0	0	0	0	0	0	**43**
11:00 - 11:14	0	0	0	10	21	4	0	0	0	0	0	0	0	0	0	**35**
11:15 - 11:29	0	0	1	13	15	3	0	0	0	0	0	0	0	0	0	**32**
11:30 - 11:44	0	0	0	6	13	7	0	0	0	0	0	0	0	0	0	**26**
11:45 - 11:59	0	0	3	12	15	6	0	0	0	0	0	0	0	0	0	**36**
12:00 - 12:14	0	0	2	15	21	3	1	0	0	0	0	0	0	0	0	**42**
12:15 - 12:29	0	0	2	16	15	6	0	0	0	0	0	0	0	0	0	**39**
12:30 - 12:44	0	0	0	13	20	6	0	0	0	0	0	0	0	0	0	**39**

Daily Westbound Speeds (MPH)

Study Date: Wednesday, 09/19/2018
Unit ID: 0232
Location: N WATERWAY DR / W OF SW 69TH AV

	0-5	5-10	10-15	15-20	20-25	25-30	30-35	35-40	40-45	45-50	50-55	55-60	60-65	65-70	70-75	Total
12:45 - 12:59	0	0	0	17	25	4	0	0	0	0	0	0	0	0	0	**46**
13:00 - 13:14	0	0	2	10	21	2	0	0	0	0	0	0	0	0	0	**35**
13:15 - 13:29	0	0	1	19	23	10	0	0	0	0	0	0	0	0	0	**53**
13:30 - 13:44	0	0	2	21	26	7	1	0	0	0	0	0	0	0	0	**57**
13:45 - 13:59	0	0	2	15	12	9	0	0	0	0	0	0	0	0	0	**38**
14:00 - 14:14	0	0	2	22	27	7	0	0	0	0	0	0	0	0	0	**58**
14:15 - 14:29	0	0	0	14	29	9	0	0	0	0	0	0	0	0	0	**52**
14:30 - 14:44	0	0	0	17	30	10	1	0	0	0	0	0	0	0	0	**58**
14:45 - 14:59	0	0	3	21	32	8	2	0	0	0	0	0	0	0	0	**66**
15:00 - 15:14	0	1	4	24	16	7	0	0	0	0	0	0	0	0	0	**52**
15:15 - 15:29	0	0	0	22	34	14	1	0	0	0	0	0	0	0	0	**71**
15:30 - 15:44	0	0	5	25	28	21	4	0	0	0	0	0	0	0	0	**83**
15:45 - 15:59	0	1	2	26	40	22	0	0	0	0	0	0	0	0	0	**91**
16:00 - 16:14	0	0	3	26	58	9	1	1	0	0	0	0	0	0	0	**98**
16:15 - 16:29	0	0	1	31	61	23	1	0	0	0	0	0	0	0	0	**117**
16:30 - 16:44	0	0	2	24	84	23	0	0	0	0	0	0	0	0	0	**133**
16:45 - 16:59	0	0	3	33	69	29	2	0	0	0	0	0	0	0	0	**136**
17:00 - 17:14	0	0	4	46	105	12	0	0	0	0	0	0	0	0	0	**167**
17:15 - 17:29	0	0	5	55	128	26	0	0	0	0	0	0	0	0	0	**214**
17:30 - 17:44	0	0	2	50	97	29	0	0	0	0	0	0	0	0	0	**178**
17:45 - 17:59	0	0	0	54	103	22	1	2	0	0	0	0	0	0	0	**182**
18:00 - 18:14	0	0	0	45	94	16	1	0	0	0	0	0	0	0	0	**156**
18:15 - 18:29	0	0	3	41	80	34	1	0	0	0	0	0	0	0	0	**159**
18:30 - 18:44	0	0	2	38	46	12	1	0	0	0	0	0	0	0	0	**99**
18:45 - 18:59	0	0	3	32	38	11	0	0	0	0	0	0	0	0	0	**84**
19:00 - 19:14	0	0	1	18	27	6	0	0	0	0	0	0	0	0	0	**52**
19:15 - 19:29	0	0	2	18	24	6	0	0	0	0	0	0	0	0	0	**50**
19:30 - 19:44	0	0	3	9	28	10	0	0	0	0	0	0	0	0	0	**50**
19:45 - 19:59	0	0	2	9	13	6	0	0	0	0	0	0	0	0	0	**30**
20:00 - 20:14	0	0	2	7	12	2	0	0	0	0	0	0	0	0	0	**23**
20:15 - 20:29	0	0	1	10	4	4	0	0	0	0	0	0	0	0	0	**19**
20:30 - 20:44	0	0	1	4	3	6	0	0	0	0	0	0	0	0	0	**14**
20:45 - 20:59	0	0	0	6	7	4	0	0	0	0	0	0	0	0	0	**17**
21:00 - 21:14	0	0	0	4	2	2	0	0	0	0	0	0	0	0	0	**8**
21:15 - 21:29	0	0	0	2	7	1	0	0	0	0	0	0	0	0	0	**10**
21:30 - 21:44	0	0	0	2	4	0	0	0	0	0	0	0	0	0	0	**6**
21:45 - 21:59	0	0	2	1	3	3	0	0	0	0	0	0	0	0	0	**9**
22:00 - 22:14	0	0	0	0	1	2	1	0	0	0	0	0	0	0	0	**4**
22:15 - 22:29	0	0	0	0	2	3	0	0	0	0	0	0	0	0	0	**5**
22:30 - 22:44	0	0	0	3	4	0	0	0	0	0	0	0	0	0	0	**7**
22:45 - 22:59	0	0	0	1	1	0	0	0	0	0	0	0	0	0	0	**2**
23:00 - 23:14	0	0	1	1	2	0	0	0	0	0	0	0	0	0	0	**4**
23:15 - 23:29	0	0	0	0	2	2	0	0	0	0	0	0	0	0	0	**4**
23:30 - 23:44	0	0	0	0	0	0	0	0	0	0	0	0	0	0	0	**0**
23:45 - 23:59	0	0	0	1	2	0	0	0	0	0	0	0	0	0	0	**3**
Totals	**0**	**2**	**120**	**1179**	**1913**	**543**	**29**	**3**	**0**	**0**	**0**	**0**	**0**	**0**	**0**	**3789**
Percent of Total	**0.0**	**0.1**	**3.2**	**31.1**	**50.5**	**14.3**	**0.8**	**0.1**	**0.0**	**0.0**	**0.0**	**0.0**	**0.0**	**0.0**	**0.0**	**100**
Percent of AM	**0.0**	**0.0**	**5.8**	**35.8**	**46.4**	**10.9**	**1.2**	**0.0**	**0.0**	**0.0**	**0.0**	**0.0**	**0.0**	**0.0**	**0.0**	**100**
Percent of PM	**0.0**	**0.1**	**2.4**	**29.7**	**51.7**	**15.3**	**0.7**	**0.1**	**0.0**	**0.0**	**0.0**	**0.0**	**0.0**	**0.0**	**0.0**	**100**

Daily Westbound Speeds (MPH)

Study Date: Wednesday, 09/19/2018
Unit ID: 0232
Location: N WATERWAY DR / W OF SW 69TH AV

Standard Deviation:	4.2 MPH	Ten Mile Pace:	15 to 24 MPH	85th Percentile:	25.1 MPH
Mean Speed:	21.9 MPH	Percent in Ten Mile Pace:	81.6%		
Median Speed:	21.9 MPH			15th Percentile:	17.3 MPH
Modal Speed:	23.0 MPH			90th Percentile:	27.2 MPH
				95th Percentile:	29.3 MPH

Daily Westbound Speeds (MPH)

Study Date: Thursday, 09/20/2018
Unit ID: 0232
Location: N WATERWAY DR / W OF SW 69TH AV

	0-5	5-10	10-15	15-20	20-25	25-30	30-35	35-40	40-45	45-50	50-55	55-60	60-65	65-70	70-75	Total
00:00 - 00:14	0	0	0	0	0	0	0	0	0	0	0	0	0	0	0	**0**
00:15 - 00:29	0	0	0	0	0	0	0	0	0	0	0	0	0	0	0	**0**
00:30 - 00:44	0	0	0	1	0	0	0	0	0	0	0	0	0	0	0	**1**
00:45 - 00:59	0	0	0	0	0	1	0	0	0	0	0	0	0	0	0	**1**
01:00 - 01:14	0	0	0	0	0	0	0	0	0	0	0	0	0	0	0	**0**
01:15 - 01:29	0	0	1	0	0	0	0	0	0	0	0	0	0	0	0	**1**
01:30 - 01:44	0	0	0	1	0	0	0	0	0	0	0	0	0	0	0	**1**
01:45 - 01:59	0	0	0	1	0	1	0	0	0	0	0	0	0	0	0	**2**
02:00 - 02:14	0	0	0	0	0	0	0	0	0	0	0	0	0	0	0	**0**
02:15 - 02:29	0	0	0	0	0	0	0	0	0	0	0	0	0	0	0	**0**
02:30 - 02:44	0	0	0	0	1	0	0	0	0	0	0	0	0	0	0	**1**
02:45 - 02:59	0	0	0	0	0	0	0	0	0	0	0	0	0	0	0	**0**
03:00 - 03:14	0	0	0	0	0	0	0	0	0	0	0	0	0	0	0	**0**
03:15 - 03:29	0	0	0	0	0	0	0	0	0	0	0	0	0	0	0	**0**
03:30 - 03:44	0	0	0	0	1	0	0	0	0	0	0	0	0	0	0	**1**
03:45 - 03:59	0	0	0	1	2	0	0	0	0	0	0	0	0	0	0	**3**
04:00 - 04:14	0	0	1	0	0	1	0	0	0	0	0	0	0	0	0	**2**
04:15 - 04:29	0	0	0	1	0	0	0	0	0	0	0	0	0	0	0	**1**
04:30 - 04:44	0	0	0	0	1	0	0	0	0	0	0	0	0	0	0	**1**
04:45 - 04:59	0	0	1	0	1	1	0	0	0	0	0	0	0	0	0	**3**
05:00 - 05:14	0	0	0	0	2	0	0	0	0	0	0	0	0	0	0	**2**
05:15 - 05:29	0	0	0	0	1	1	0	0	0	0	0	0	0	0	0	**2**
05:30 - 05:44	0	0	0	0	4	1	0	0	0	0	0	0	0	0	0	**5**
05:45 - 05:59	0	0	0	3	5	1	0	0	0	0	0	0	0	0	0	**9**
06:00 - 06:14	0	0	1	4	8	1	0	0	0	0	0	0	0	0	0	**14**
06:15 - 06:29	0	0	1	3	5	2	0	0	0	0	0	0	0	0	0	**11**
06:30 - 06:44	0	0	2	6	9	3	0	0	0	0	0	0	0	0	0	**20**
06:45 - 06:59	0	0	3	12	12	4	0	0	0	0	0	0	0	0	0	**31**
07:00 - 07:14	0	0	2	13	16	1	0	0	0	0	0	0	0	0	0	**32**
07:15 - 07:29	0	0	5	16	24	8	0	0	0	0	0	0	0	0	0	**53**
07:30 - 07:44	0	1	5	15	18	3	0	0	0	0	0	0	0	0	0	**42**
07:45 - 07:59	0	0	3	21	19	5	0	0	0	0	0	0	0	0	0	**48**
08:00 - 08:14	0	0	2	16	24	10	1	0	0	0	0	0	0	0	0	**53**
08:15 - 08:29	0	0	3	15	19	1	0	0	0	0	0	0	0	0	0	**38**
08:30 - 08:44	0	0	2	11	25	12	0	0	0	0	0	0	0	0	0	**50**
08:45 - 08:59	0	0	3	14	18	7	0	0	0	0	0	0	0	0	0	**42**
09:00 - 09:14	0	0	1	12	20	4	1	0	0	0	0	0	0	0	0	**38**
09:15 - 09:29	0	0	5	15	19	2	0	0	0	0	0	0	0	0	0	**41**
09:30 - 09:44	0	0	2	12	14	6	0	0	0	0	0	0	0	0	0	**34**
09:45 - 09:59	0	0	2	16	11	5	0	0	0	0	0	0	0	0	0	**34**
10:00 - 10:14	0	0	0	17	9	2	0	0	0	0	0	0	0	0	0	**28**
10:15 - 10:29	0	0	1	5	15	5	0	0	0	0	0	0	0	0	0	**26**
10:30 - 10:44	0	0	1	10	13	5	0	0	0	0	0	0	0	0	0	**29**
10:45 - 10:59	0	0	0	11	16	5	1	0	0	0	0	0	0	0	0	**33**
11:00 - 11:14	0	0	1	11	16	7	0	1	0	0	0	0	0	0	0	**36**
11:15 - 11:29	0	0	0	8	14	4	1	0	0	0	0	0	0	0	0	**27**
11:30 - 11:44	0	0	1	12	10	6	1	0	0	0	0	0	0	0	0	**30**
11:45 - 11:59	0	0	2	10	23	5	0	0	0	0	0	0	0	0	0	**40**
12:00 - 12:14	0	0	2	14	15	6	1	0	0	0	0	0	0	0	0	**38**
12:15 - 12:29	0	0	1	9	19	6	0	0	0	0	0	0	0	0	0	**35**
12:30 - 12:44	0	0	1	19	17	9	0	0	0	0	0	0	0	0	0	**46**

Daily Westbound Speeds (MPH)

Study Date: Thursday, 09/20/2018
Unit ID: 0232
Location: N WATERWAY DR / W OF SW 69TH AV

	0-5	5-10	10-15	15-20	20-25	25-30	30-35	35-40	40-45	45-50	50-55	55-60	60-65	65-70	70-75	Total
12:45 - 12:59	0	0	3	17	16	3	0	0	0	0	0	0	0	0	0	**39**
13:00 - 13:14	0	0	5	8	13	3	0	0	0	0	0	0	0	0	0	**29**
13:15 - 13:29	0	0	6	15	21	6	0	0	0	0	0	0	0	0	0	**48**
13:30 - 13:44	0	0	3	20	19	9	0	0	0	0	0	0	0	0	0	**51**
13:45 - 13:59	0	3	2	21	13	5	1	0	0	0	0	0	0	0	0	**45**
14:00 - 14:14	0	0	2	17	26	1	0	0	0	0	0	0	0	0	0	**46**
14:15 - 14:29	0	0	1	22	22	15	0	0	0	0	0	0	0	0	0	**60**
14:30 - 14:44	0	0	2	18	31	12	0	0	0	0	0	0	0	0	0	**63**
14:45 - 14:59	0	0	3	19	28	13	0	0	0	0	0	0	0	0	0	**63**
15:00 - 15:14	0	1	2	25	38	8	0	0	0	0	0	0	0	0	0	**74**
15:15 - 15:29	0	0	1	27	45	7	0	0	0	0	0	0	0	0	0	**80**
15:30 - 15:44	0	0	2	25	47	14	0	0	0	0	0	0	0	0	0	**88**
15:45 - 15:59	0	0	2	43	59	22	1	0	0	0	0	0	0	0	0	**127**
16:00 - 16:14	0	0	2	43	80	13	0	0	0	0	0	0	0	0	0	**138**
16:15 - 16:29	0	0	2	51	73	31	2	0	0	0	0	0	0	0	0	**159**
16:30 - 16:44	0	0	3	39	98	22	0	0	0	0	0	0	0	0	0	**162**
16:45 - 16:59	0	0	3	41	108	24	0	0	0	0	0	0	0	0	0	**176**
17:00 - 17:14	0	0	8	37	122	24	1	0	0	0	0	0	0	0	0	**192**
17:15 - 17:29	0	0	4	47	129	36	1	0	0	0	0	0	0	0	0	**217**
17:30 - 17:44	0	0	3	52	111	27	2	0	0	0	0	0	0	0	0	**195**
17:45 - 17:59	0	0	0	42	103	35	2	0	0	0	0	0	0	0	0	**182**
18:00 - 18:14	0	0	3	46	102	19	0	0	0	0	0	0	0	0	0	**170**
18:15 - 18:29	0	0	1	44	59	24	2	0	0	0	0	0	0	0	0	**130**
18:30 - 18:44	0	0	0	31	40	11	1	0	0	0	0	0	0	0	0	**83**
18:45 - 18:59	0	0	4	23	42	16	0	0	0	0	0	0	0	0	0	**85**
19:00 - 19:14	0	0	0	18	25	7	0	0	0	0	0	0	0	0	0	**50**
19:15 - 19:29	0	0	1	12	24	9	0	0	0	0	0	0	0	0	0	**46**
19:30 - 19:44	0	0	1	11	13	5	1	0	0	0	0	0	0	0	0	**31**
19:45 - 19:59	0	0	0	15	19	4	0	0	0	0	0	0	0	0	0	**38**
20:00 - 20:14	0	0	2	12	11	4	1	0	0	0	0	0	0	0	0	**30**
20:15 - 20:29	0	0	3	11	13	3	0	0	0	0	0	0	0	0	0	**30**
20:30 - 20:44	0	0	3	6	9	4	0	0	0	0	0	0	0	0	0	**22**
20:45 - 20:59	0	0	1	3	4	1	0	0	0	0	0	0	0	0	0	**9**
21:00 - 21:14	0	0	1	3	7	1	0	0	0	0	0	0	0	0	0	**12**
21:15 - 21:29	0	0	2	3	3	1	0	1	0	0	0	0	0	0	0	**10**
21:30 - 21:44	0	0	0	6	4	0	0	0	0	0	0	0	0	0	0	**10**
21:45 - 21:59	0	0	2	3	0	0	0	0	0	0	0	0	0	0	0	**5**
22:00 - 22:14	0	0	1	4	4	0	0	0	0	0	0	0	0	0	0	**9**
22:15 - 22:29	0	0	0	7	0	0	0	0	0	0	0	0	0	0	0	**7**
22:30 - 22:44	0	0	0	1	2	0	0	0	0	0	0	0	0	0	0	**3**
22:45 - 22:59	0	0	0	0	0	2	0	0	0	0	0	0	0	0	0	**2**
23:00 - 23:14	0	0	0	2	3	0	0	0	0	0	0	0	0	0	0	**5**
23:15 - 23:29	0	0	0	1	1	2	0	0	0	0	0	0	0	0	0	**4**
23:30 - 23:44	0	0	0	0	0	1	0	0	0	0	0	0	0	0	0	**1**
23:45 - 23:59	0	0	2	0	0	0	0	0	0	0	0	0	0	0	0	**2**
Totals	**0**	**5**	**141**	**1226**	**2033**	**585**	**21**	**2**	**0**	**0**	**0**	**0**	**0**	**0**	**0**	**4013**
Percent of Total	**0.0**	**0.1**	**3.5**	**30.6**	**50.7**	**14.6**	**0.5**	**0.0**	**0.0**	**0.0**	**0.0**	**0.0**	**0.0**	**0.0**	**0.0**	**100**
Percent of AM	**0.0**	**0.1**	**5.9**	**33.8**	**45.6**	**13.9**	**0.6**	**0.1**	**0.0**	**0.0**	**0.0**	**0.0**	**0.0**	**0.0**	**0.0**	**100**
Percent of PM	**0.0**	**0.1**	**2.9**	**29.6**	**52.0**	**14.8**	**0.5**	**0.0**	**0.0**	**0.0**	**0.0**	**0.0**	**0.0**	**0.0**	**0.0**	**100**

Daily Westbound Speeds (MPH)

Study Date: Thursday, 09/20/2018
Unit ID: 0232
Location: N WATERWAY DR / W OF SW 69TH AV

Standard Deviation:	4.2 MPH	Ten Mile Pace:	15 to 24 MPH	85th Percentile:	25.1 MPH
Mean Speed:	21.9 MPH	Percent in Ten Mile Pace:	81.2%	15th Percentile:	17.2 MPH
Median Speed:	21.9 MPH			90th Percentile:	27.1 MPH
Modal Speed:	23.0 MPH			95th Percentile:	29.2 MPH

Daily Eastbound Speeds (MPH)

Study Date: Tuesday, 09/18/2018
Unit ID: 0149
Location: SW 24TH ST / W OF SW 69TH AV

	0-5	5-10	10-15	15-20	20-25	25-30	30-35	35-40	40-45	45-50	50-55	55-60	60-65	65-70	70-75	Total
00:00 - 00:14	0	0	0	0	1	1	10	13	12	4	1	0	0	1	0	**43**
00:15 - 00:29	0	0	0	0	1	3	11	15	4	4	3	0	0	0	0	**41**
00:30 - 00:44	0	0	0	0	1	3	3	17	8	1	0	0	1	0	0	**34**
00:45 - 00:59	0	0	0	0	0	3	7	10	5	4	0	0	0	0	0	**29**
01:00 - 01:14	0	0	1	0	3	3	3	8	1	5	0	0	0	0	0	**24**
01:15 - 01:29	0	0	0	0	0	2	3	7	5	2	1	1	1	0	0	**22**
01:30 - 01:44	0	0	0	0	1	4	10	7	3	1	2	0	0	0	0	**28**
01:45 - 01:59	0	0	0	0	0	2	8	2	5	1	1	0	0	0	0	**19**
02:00 - 02:14	0	0	0	0	0	1	5	4	3	3	0	0	0	0	0	**16**
02:15 - 02:29	0	0	0	1	1	1	3	7	1	0	0	0	0	0	0	**14**
02:30 - 02:44	0	0	0	0	0	6	3	7	2	3	0	0	0	0	0	**21**
02:45 - 02:59	0	0	0	0	0	0	3	4	0	1	0	1	0	0	0	**9**
03:00 - 03:14	0	0	0	0	1	0	0	0	2	2	1	0	0	0	0	**6**
03:15 - 03:29	0	0	0	0	1	3	5	5	2	3	0	0	0	0	0	**19**
03:30 - 03:44	0	0	0	0	0	0	1	5	3	3	2	0	0	0	0	**14**
03:45 - 03:59	0	0	0	0	0	0	4	7	1	0	3	1	0	0	0	**16**
04:00 - 04:14	0	0	0	0	1	0	2	5	2	0	1	0	0	0	0	**11**
04:15 - 04:29	0	0	0	0	1	1	5	6	3	1	0	0	0	0	0	**17**
04:30 - 04:44	0	0	0	0	3	5	5	9	6	2	0	0	0	0	0	**30**
04:45 - 04:59	0	0	0	0	1	6	6	7	6	1	1	0	0	0	0	**28**
05:00 - 05:14	0	0	0	0	0	4	13	8	8	6	0	0	0	0	0	**39**
05:15 - 05:29	0	0	0	1	1	5	11	20	14	7	2	0	0	0	0	**61**
05:30 - 05:44	0	0	0	2	3	6	22	30	19	6	0	1	0	0	0	**89**
05:45 - 05:59	0	0	0	0	0	4	39	41	40	10	1	0	0	0	0	**135**
06:00 - 06:14	0	0	0	2	2	26	50	38	29	12	2	0	0	0	0	**161**
06:15 - 06:29	0	0	0	2	8	50	86	54	25	1	1	0	0	0	0	**227**
06:30 - 06:44	0	0	0	10	35	83	86	35	13	7	0	0	0	0	0	**269**
06:45 - 06:59	0	0	1	8	46	91	100	53	7	1	0	0	0	0	0	**307**
07:00 - 07:14	0	6	21	55	79	56	37	6	0	0	1	0	1	0	0	**262**
07:15 - 07:29	1	15	83	66	17	7	1	0	0	0	0	0	1	0	0	**191**
07:30 - 07:44	2	37	54	62	19	2	1	1	2	0	0	0	0	0	0	**180**
07:45 - 07:59	1	25	57	47	15	1	3	1	0	0	1	0	0	0	0	**151**
08:00 - 08:14	1	20	55	44	14	10	2	0	0	1	0	0	0	0	0	**147**
08:15 - 08:29	1	20	75	71	17	3	1	0	0	0	0	0	0	0	0	**188**
08:30 - 08:44	0	19	54	60	13	6	1	2	0	0	0	0	1	0	0	**156**
08:45 - 08:59	2	12	35	64	54	29	4	0	0	0	0	0	0	0	0	**200**
09:00 - 09:14	0	8	16	55	80	56	22	4	2	0	0	0	0	0	0	**243**
09:15 - 09:29	1	15	28	80	51	31	14	9	2	0	0	0	0	0	0	**231**
09:30 - 09:44	1	13	37	74	72	17	5	4	1	1	0	0	0	0	0	**225**
09:45 - 09:59	0	10	26	34	76	76	30	4	1	0	0	0	0	0	0	**257**
10:00 - 10:14	0	9	27	35	35	61	49	26	3	0	0	0	0	0	0	**245**
10:15 - 10:29	0	2	7	28	59	78	59	36	2	1	0	0	0	0	0	**272**
10:30 - 10:44	0	1	7	31	68	45	59	32	5	1	0	0	0	0	0	**249**
10:45 - 10:59	0	2	5	20	66	85	37	12	5	2	0	0	0	0	0	**234**
11:00 - 11:14	0	1	1	22	70	59	29	13	3	0	0	0	0	0	0	**198**
11:15 - 11:29	0	0	2	19	76	82	60	22	6	0	0	0	0	0	0	**267**
11:30 - 11:44	0	0	0	12	84	80	47	19	4	0	0	1	0	1	0	**248**
11:45 - 11:59	0	0	8	26	50	80	49	19	6	0	0	0	0	0	0	**238**
12:00 - 12:14	0	0	4	12	63	99	57	16	6	0	0	0	0	0	0	**257**
12:15 - 12:29	0	1	8	35	76	88	40	15	5	0	0	0	0	0	0	**268**
12:30 - 12:44	0	2	3	9	59	76	62	25	3	3	0	0	0	0	0	**242**

Daily Eastbound Speeds (MPH)

Study Date: Tuesday, 09/18/2018
Unit ID: 0149
Location: SW 24TH ST / W OF SW 69TH AV

	0-5	5-10	10-15	15-20	20-25	25-30	30-35	35-40	40-45	45-50	50-55	55-60	60-65	65-70	70-75	Total
12:45 - 12:59	0	0	8	9	57	99	47	13	1	0	0	0	0	0	0	**234**
13:00 - 13:14	1	13	33	36	41	45	20	10	0	0	0	0	0	0	0	**199**
13:15 - 13:29	0	0	6	44	73	69	52	18	2	1	0	0	0	0	0	**265**
13:30 - 13:44	0	0	2	19	68	98	59	26	7	1	0	0	0	0	0	**280**
13:45 - 13:59	0	6	50	37	32	16	3	1	1	0	0	0	0	0	0	**146**
14:00 - 14:14	0	3	58	58	37	11	2	1	0	0	0	0	0	0	0	**170**
14:15 - 14:29	7	12	58	67	43	13	4	1	0	0	0	0	0	0	0	**205**
14:30 - 14:44	1	10	36	50	41	16	3	3	1	0	0	0	0	0	0	**161**
14:45 - 14:59	0	12	50	87	29	4	1	1	1	0	0	0	0	0	0	**185**
15:00 - 15:14	2	4	44	79	58	15	3	1	0	1	0	0	0	0	0	**207**
15:15 - 15:29	0	2	70	64	70	25	5	2	1	0	0	0	0	0	0	**239**
15:30 - 15:44	1	3	18	56	79	41	28	8	0	0	0	0	0	0	0	**234**
15:45 - 15:59	0	0	2	31	80	93	35	19	5	0	0	0	0	0	0	**265**
16:00 - 16:14	0	2	34	30	42	67	29	20	3	0	1	0	0	0	0	**228**
16:15 - 16:29	0	0	3	30	62	78	60	14	4	0	0	0	0	0	0	**251**
16:30 - 16:44	1	2	12	10	71	93	39	6	4	1	0	0	0	0	0	**239**
16:45 - 16:59	0	0	5	9	34	54	65	26	8	1	0	1	0	0	0	**203**
17:00 - 17:14	0	0	0	6	54	83	42	28	4	0	0	0	0	0	0	**217**
17:15 - 17:29	0	0	0	17	48	86	56	25	6	1	0	0	0	0	0	**239**
17:30 - 17:44	0	3	5	12	63	72	46	23	6	1	0	0	0	0	0	**231**
17:45 - 17:59	0	0	0	19	40	66	64	24	5	0	0	0	0	0	0	**218**
18:00 - 18:14	0	0	1	9	42	56	53	29	7	1	0	0	0	0	0	**198**
18:15 - 18:29	0	0	1	9	38	62	56	39	6	1	0	1	0	0	0	**213**
18:30 - 18:44	0	0	2	10	49	69	74	18	7	1	0	0	0	0	0	**230**
18:45 - 18:59	0	0	4	16	60	84	55	20	0	0	0	0	0	0	0	**239**
19:00 - 19:14	0	1	1	5	45	72	65	24	5	0	0	0	0	0	0	**218**
19:15 - 19:29	0	2	7	12	48	69	80	20	14	0	0	0	0	0	0	**252**
19:30 - 19:44	0	1	1	0	29	78	57	29	5	1	0	0	0	0	0	**201**
19:45 - 19:59	0	0	0	4	30	46	71	38	11	2	2	0	0	0	0	**204**
20:00 - 20:14	0	0	0	2	32	62	64	34	14	2	0	0	0	0	0	**210**
20:15 - 20:29	0	0	2	5	25	57	68	36	13	0	1	0	0	0	0	**207**
20:30 - 20:44	0	0	0	1	31	58	60	38	15	4	1	0	1	0	0	**209**
20:45 - 20:59	0	0	0	3	13	46	67	32	12	1	1	0	0	0	0	**175**
21:00 - 21:14	0	1	2	4	28	55	93	41	11	3	0	0	0	0	0	**238**
21:15 - 21:29	0	0	1	2	10	42	73	35	24	2	0	0	0	0	0	**189**
21:30 - 21:44	0	0	0	0	2	34	56	59	17	7	0	0	0	0	0	**175**
21:45 - 21:59	0	0	0	1	14	34	57	45	21	3	1	0	0	0	0	**176**
22:00 - 22:14	0	0	0	0	13	21	50	30	20	4	0	0	0	0	0	**138**
22:15 - 22:29	0	0	0	0	14	30	46	33	12	7	1	0	0	0	0	**143**
22:30 - 22:44	0	0	0	0	2	24	28	33	19	1	0	1	0	0	0	**108**
22:45 - 22:59	0	0	0	2	1	16	27	40	15	5	3	1	0	0	0	**110**
23:00 - 23:14	0	0	0	0	1	5	27	25	10	6	1	1	0	0	0	**76**
23:15 - 23:29	0	0	0	0	1	7	13	22	15	7	1	0	0	0	0	**66**
23:30 - 23:44	0	0	0	0	1	10	13	20	14	1	2	1	0	0	0	**62**
23:45 - 23:59	0	0	0	1	0	7	7	14	15	2	1	1	0	0	0	**48**
Totals	**23**	**295**	**1131**	**1843**	**2975**	**3628**	**3096**	**1714**	**646**	**168**	**40**	**12**	**6**	**2**	**0**	**15579**
Percent of Total	**0.1**	**1.9**	**7.3**	**11.8**	**19.1**	**23.3**	**19.9**	**11.0**	**4.1**	**1.1**	**0.3**	**0.1**	**0.0**	**0.0**	**0.0**	**100**
Percent of AM	**0.2**	**3.5**	**9.8**	**15.2**	**18.4**	**19.3**	**16.6**	**10.4**	**4.4**	**1.6**	**0.4**	**0.1**	**0.1**	**0.0**	**0.0**	**100**
Percent of PM	**0.1**	**0.8**	**5.6**	**9.6**	**19.5**	**25.9**	**22.0**	**11.4**	**4.0**	**0.7**	**0.2**	**0.1**	**0.0**	**0.0**	**0.0**	**100**

Daily Eastbound Speeds (MPH)

Study Date: Tuesday, 09/18/2018
Unit ID: 0149
Location: SW 24TH ST / W OF SW 69TH AV

Standard Deviation:	8.8 MPH	Ten Mile Pace:	25 to 34 MPH	85th Percentile:	35.9 MPH
Mean Speed:	27.4 MPH	Percent in Ten Mile Pace:	43.2%	15th Percentile:	17.9 MPH
Median Speed:	27.5 MPH			90th Percentile:	38.6 MPH
Modal Speed:	28.0 MPH			95th Percentile:	40.9 MPH

Daily Eastbound Speeds (MPH)

Study Date: Wednesday, 09/19/2018
Unit ID: 0149
Location: SW 24TH ST / W OF SW 69TH AV

	0-5	5-10	10-15	15-20	20-25	25-30	30-35	35-40	40-45	45-50	50-55	55-60	60-65	65-70	70-75	Total
00:00 - 00:14	0	0	0	0	0	2	12	12	15	6	1	0	1	0	0	**49**
00:15 - 00:29	0	0	0	0	1	6	13	14	5	4	1	0	0	0	0	**44**
00:30 - 00:44	0	0	0	0	1	4	9	5	7	0	2	2	0	0	0	**30**
00:45 - 00:59	0	0	0	1	0	5	4	5	7	2	0	0	0	0	0	**24**
01:00 - 01:14	0	0	0	0	1	2	2	5	4	2	1	0	0	0	0	**17**
01:15 - 01:29	0	0	0	0	2	3	4	5	10	5	0	0	0	0	0	**29**
01:30 - 01:44	0	1	0	0	2	4	8	3	2	2	2	0	0	1	0	**25**
01:45 - 01:59	0	0	0	1	0	1	3	6	3	1	1	0	0	1	0	**17**
02:00 - 02:14	0	0	0	0	1	0	2	4	5	1	0	0	0	0	0	**13**
02:15 - 02:29	0	0	0	0	0	1	2	6	2	1	0	0	0	0	0	**12**
02:30 - 02:44	0	0	0	0	2	3	1	3	3	4	0	0	0	0	0	**16**
02:45 - 02:59	0	0	0	0	0	2	1	8	1	0	0	0	0	0	0	**12**
03:00 - 03:14	0	0	0	0	0	0	1	6	3	2	0	0	0	0	0	**12**
03:15 - 03:29	0	0	0	0	2	0	1	3	1	1	0	1	0	0	0	**9**
03:30 - 03:44	0	0	1	0	0	1	0	3	3	0	1	0	0	0	0	**9**
03:45 - 03:59	0	0	1	0	2	1	7	5	6	0	2	1	0	0	0	**25**
04:00 - 04:14	0	0	0	0	0	1	1	4	2	0	1	0	0	0	0	**9**
04:15 - 04:29	0	0	0	0	1	3	2	7	5	1	1	0	0	0	0	**20**
04:30 - 04:44	0	0	1	0	0	0	7	6	3	3	3	0	0	0	0	**23**
04:45 - 04:59	0	0	0	0	1	3	6	6	6	6	2	0	0	0	0	**30**
05:00 - 05:14	0	0	0	1	0	2	8	9	6	5	0	0	0	0	0	**31**
05:15 - 05:29	0	0	0	0	1	10	14	21	4	1	1	0	0	0	0	**52**
05:30 - 05:44	0	0	0	0	4	3	10	27	21	10	3	1	0	0	0	**79**
05:45 - 05:59	0	0	0	0	1	12	17	47	38	17	3	1	0	0	0	**136**
06:00 - 06:14	0	0	0	0	14	19	45	35	26	8	4	0	1	0	0	**152**
06:15 - 06:29	0	0	0	0	7	27	43	60	35	10	7	0	0	0	0	**189**
06:30 - 06:44	0	0	0	15	32	50	73	66	22	7	3	0	0	0	0	**268**
06:45 - 06:59	0	0	0	7	37	77	90	61	18	3	0	0	0	0	0	**293**
07:00 - 07:14	0	8	7	22	75	99	52	22	3	3	0	0	0	0	0	**291**
07:15 - 07:29	2	6	19	64	61	48	17	5	1	0	0	0	0	0	0	**223**
07:30 - 07:44	0	8	32	87	82	28	8	0	1	0	0	0	0	0	0	**246**
07:45 - 07:59	0	7	26	86	95	31	20	3	1	0	0	0	0	0	0	**269**
08:00 - 08:14	1	10	21	50	53	41	29	6	1	0	0	0	0	0	0	**212**
08:15 - 08:29	0	11	24	88	65	49	43	7	5	0	0	0	1	0	0	**293**
08:30 - 08:44	0	24	18	58	61	35	11	1	0	1	0	0	0	0	1	**210**
08:45 - 08:59	0	12	27	59	68	53	17	3	1	0	0	0	0	0	0	**240**
09:00 - 09:14	2	12	27	68	63	48	16	4	2	0	0	0	0	0	0	**242**
09:15 - 09:29	0	3	24	47	73	46	40	13	7	2	1	0	0	0	0	**256**
09:30 - 09:44	0	0	8	29	75	84	58	23	5	1	0	0	0	0	0	**283**
09:45 - 09:59	1	3	21	60	75	57	27	9	0	0	0	0	0	0	0	**253**
10:00 - 10:14	0	0	1	8	49	125	52	29	5	1	0	0	0	0	0	**270**
10:15 - 10:29	0	0	10	27	79	70	54	31	8	2	0	0	0	0	0	**281**
10:30 - 10:44	0	2	15	36	74	78	52	13	1	0	0	0	0	0	0	**271**
10:45 - 10:59	0	0	7	41	88	81	63	26	2	0	0	0	0	0	0	**308**
11:00 - 11:14	0	4	14	27	43	92	58	24	0	1	0	0	0	0	0	**263**
11:15 - 11:29	0	2	4	14	82	93	53	18	3	0	0	0	0	0	0	**269**
11:30 - 11:44	0	1	11	12	41	64	58	27	8	0	0	0	0	0	0	**222**
11:45 - 11:59	0	1	0	15	60	96	54	18	3	0	0	0	0	0	0	**247**
12:00 - 12:14	0	0	6	34	79	76	52	17	5	0	0	1	0	0	0	**270**
12:15 - 12:29	0	0	1	11	94	89	49	16	2	1	0	0	0	0	0	**263**
12:30 - 12:44	0	0	6	27	86	93	44	13	1	0	0	0	1	0	0	**271**

Daily Eastbound Speeds (MPH)

Study Date: Wednesday, 09/19/2018
Unit ID: 0149
Location: SW 24TH ST / W OF SW 69TH AV

	0-5	5-10	10-15	15-20	20-25	25-30	30-35	35-40	40-45	45-50	50-55	55-60	60-65	65-70	70-75	Total
12:45 - 12:59	0	0	13	32	86	76	54	10	2	3	0	0	0	0	0	**276**
13:00 - 13:14	0	0	0	25	116	78	51	15	3	2	0	0	0	0	0	**290**
13:15 - 13:29	0	1	3	25	75	82	58	20	4	1	0	0	0	0	0	**269**
13:30 - 13:44	0	0	4	30	102	83	45	16	4	0	0	0	0	0	0	**284**
13:45 - 13:59	0	3	1	13	43	87	61	18	2	0	0	0	0	0	0	**228**
14:00 - 14:14	4	2	14	37	64	55	30	20	6	0	0	0	0	0	0	**232**
14:15 - 14:29	0	2	13	53	68	49	24	5	5	2	0	0	0	0	0	**221**
14:30 - 14:44	2	5	16	42	53	65	50	16	6	0	0	0	0	0	0	**255**
14:45 - 14:59	0	2	19	30	76	66	21	7	0	0	0	0	0	0	0	**221**
15:00 - 15:14	0	0	5	31	87	75	41	28	7	3	0	0	0	0	0	**277**
15:15 - 15:29	0	0	6	28	74	95	67	25	5	1	0	0	0	0	0	**301**
15:30 - 15:44	0	4	9	23	53	95	31	15	5	0	0	0	0	0	0	**235**
15:45 - 15:59	0	0	9	29	57	63	53	12	3	1	0	0	0	0	0	**227**
16:00 - 16:14	0	0	0	8	34	82	80	37	7	0	0	0	0	0	0	**248**
16:15 - 16:29	0	0	2	16	73	60	48	17	3	1	1	0	0	0	0	**221**
16:30 - 16:44	0	0	2	27	72	61	37	13	5	0	0	0	0	0	0	**217**
16:45 - 16:59	0	0	2	18	51	75	57	27	5	1	0	0	0	0	0	**236**
17:00 - 17:14	0	1	6	18	56	69	69	21	3	1	1	0	0	0	0	**245**
17:15 - 17:29	0	1	2	19	85	103	27	14	0	2	0	0	0	0	0	**253**
17:30 - 17:44	0	3	2	9	68	102	47	12	3	0	0	0	0	0	0	**246**
17:45 - 17:59	0	5	2	12	70	104	44	13	3	1	0	0	0	0	0	**254**
18:00 - 18:14	0	1	9	34	60	59	54	18	8	1	0	0	0	0	0	**244**
18:15 - 18:29	0	0	0	10	59	95	86	17	3	0	0	0	0	0	0	**270**
18:30 - 18:44	0	0	6	19	49	81	55	29	3	2	1	0	0	1	0	**246**
18:45 - 18:59	0	0	0	13	43	84	83	38	10	5	0	0	0	0	0	**276**
19:00 - 19:14	0	0	2	15	56	72	78	26	6	2	0	2	0	0	0	**259**
19:15 - 19:29	0	1	2	6	40	93	68	21	10	1	0	0	0	0	0	**242**
19:30 - 19:44	0	0	1	20	56	78	76	25	6	3	0	0	1	0	0	**266**
19:45 - 19:59	0	0	1	13	45	90	66	26	6	1	0	0	0	0	0	**248**
20:00 - 20:14	0	0	1	19	46	77	76	33	3	0	0	0	0	0	0	**255**
20:15 - 20:29	0	0	0	3	19	54	77	55	16	5	0	0	0	0	0	**229**
20:30 - 20:44	0	0	0	3	23	50	56	44	15	4	1	1	0	0	0	**197**
20:45 - 20:59	0	0	0	4	33	33	63	49	11	3	0	0	0	0	0	**196**
21:00 - 21:14	0	0	0	1	17	34	63	41	13	0	0	0	0	0	0	**169**
21:15 - 21:29	0	0	0	3	19	45	66	40	12	6	1	0	0	0	0	**192**
21:30 - 21:44	0	0	0	3	9	47	66	44	12	2	0	0	0	0	0	**183**
21:45 - 21:59	0	0	0	0	12	42	67	70	26	8	2	1	0	0	0	**228**
22:00 - 22:14	0	0	1	2	12	48	67	43	14	5	2	0	0	0	0	**194**
22:15 - 22:29	0	0	0	1	2	19	45	41	16	3	3	2	1	0	0	**133**
22:30 - 22:44	0	0	1	4	5	20	33	28	13	12	2	1	0	0	0	**119**
22:45 - 22:59	0	0	0	1	4	20	26	22	12	6	0	2	0	0	0	**93**
23:00 - 23:14	0	0	0	0	3	9	25	30	12	7	0	0	0	0	0	**86**
23:15 - 23:29	0	1	0	0	5	8	21	25	14	2	0	1	0	0	0	**77**
23:30 - 23:44	0	0	0	0	3	2	16	23	19	8	3	0	0	0	0	**74**
23:45 - 23:59	0	0	1	0	2	3	9	19	20	9	2	1	1	0	0	**67**
Totals	**12**	**147**	**487**	**1694**	**3818**	**4606**	**3650**	**1938**	**689**	**228**	**59**	**18**	**7**	**3**	**1**	**17357**
Percent of Total	**0.1**	**0.8**	**2.8**	**9.8**	**22.0**	**26.5**	**21.0**	**11.2**	**4.0**	**1.3**	**0.3**	**0.1**	**0.0**	**0.0**	**0.0**	**100**
Percent of AM	**0.1**	**1.7**	**4.7**	**13.6**	**21.8**	**23.0**	**17.2**	**10.7**	**4.7**	**1.7**	**0.6**	**0.1**	**0.0**	**0.0**	**0.0**	**100**
Percent of PM	**0.1**	**0.3**	**1.6**	**7.3**	**22.1**	**28.8**	**23.5**	**11.5**	**3.5**	**1.1**	**0.2**	**0.1**	**0.0**	**0.0**	**0.0**	**100**

Daily Eastbound Speeds (MPH)

Study Date: Wednesday, 09/19/2018
Unit ID: 0149
Location: SW 24TH ST / W OF SW 69TH AV

Standard Deviation:	7.9 MPH	Ten Mile Pace:	20 to 29 MPH	85th Percentile:	36.0 MPH
Mean Speed:	28.5 MPH	Percent in Ten Mile Pace:	48.5%	15th Percentile:	20.4 MPH
Median Speed:	28.3 MPH			90th Percentile:	38.7 MPH
Modal Speed:	28.0 MPH			95th Percentile:	41.2 MPH

Daily Eastbound Speeds (MPH)

Study Date: Thursday, 09/20/2018
Unit ID: 0149
Location: SW 24TH ST / W OF SW 69TH AV

	0-5	5-10	10-15	15-20	20-25	25-30	30-35	35-40	40-45	45-50	50-55	55-60	60-65	65-70	70-75	Total
00:00 - 00:14	0	0	0	0	1	3	11	20	9	7	1	0	0	0	0	**52**
00:15 - 00:29	0	0	0	0	1	2	13	12	8	5	1	1	0	0	0	**43**
00:30 - 00:44	0	0	0	0	1	4	9	15	6	1	3	0	0	0	0	**39**
00:45 - 00:59	0	0	0	0	1	6	6	10	7	1	0	0	0	0	0	**31**
01:00 - 01:14	0	0	0	0	0	0	9	7	5	0	3	1	1	0	0	**26**
01:15 - 01:29	0	1	0	0	0	1	2	11	3	9	1	0	0	0	0	**28**
01:30 - 01:44	0	0	0	0	0	1	4	8	4	2	0	0	0	0	0	**19**
01:45 - 01:59	0	0	0	0	0	1	3	5	7	2	2	0	0	0	0	**20**
02:00 - 02:14	0	0	0	0	0	1	3	4	7	1	0	0	1	0	0	**17**
02:15 - 02:29	0	1	0	0	1	2	1	5	1	4	0	0	0	0	0	**15**
02:30 - 02:44	0	0	0	0	2	1	2	2	2	1	0	0	0	0	0	**10**
02:45 - 02:59	0	0	0	0	0	2	3	4	2	5	2	0	0	0	0	**18**
03:00 - 03:14	0	0	0	0	0	0	0	1	3	1	1	0	0	0	0	**6**
03:15 - 03:29	0	0	0	0	0	0	2	4	6	0	0	0	0	0	0	**12**
03:30 - 03:44	0	0	0	0	1	0	2	3	2	2	1	0	0	0	0	**11**
03:45 - 03:59	0	0	0	0	1	3	3	3	4	5	2	1	0	0	0	**22**
04:00 - 04:14	0	0	0	1	1	2	1	8	5	0	1	0	0	0	0	**19**
04:15 - 04:29	0	0	0	1	1	1	5	3	6	1	0	0	0	0	0	**18**
04:30 - 04:44	0	0	0	1	3	3	3	7	12	4	1	0	1	0	0	**35**
04:45 - 04:59	0	0	0	0	0	3	1	11	11	6	4	0	0	0	0	**36**
05:00 - 05:14	0	0	0	0	0	7	8	21	13	2	3	0	0	0	0	**54**
05:15 - 05:29	0	0	0	1	5	6	20	16	11	5	4	0	0	0	0	**68**
05:30 - 05:44	0	0	0	1	2	4	10	25	32	12	1	0	0	0	0	**87**
05:45 - 05:59	0	0	0	0	0	5	31	51	36	20	3	0	0	0	0	**146**
06:00 - 06:14	0	0	0	1	1	21	46	56	27	11	3	0	0	0	0	**166**
06:15 - 06:29	0	0	0	2	14	35	71	51	35	15	2	0	0	0	0	**225**
06:30 - 06:44	0	0	3	19	40	91	63	30	13	10	0	0	0	0	0	**269**
06:45 - 06:59	0	2	7	15	66	84	86	34	7	3	1	0	0	0	0	**305**
07:00 - 07:14	0	8	25	117	71	35	15	1	1	0	0	0	0	0	0	**273**
07:15 - 07:29	0	14	98	64	17	2	4	2	0	0	0	0	0	0	0	**201**
07:30 - 07:44	0	29	67	55	16	1	1	0	0	0	0	0	0	0	0	**169**
07:45 - 07:59	0	22	77	51	13	3	2	1	1	0	0	0	0	0	0	**170**
08:00 - 08:14	2	9	79	35	12	5	1	0	1	0	0	0	0	0	0	**144**
08:15 - 08:29	1	21	38	48	23	6	1	1	0	0	0	0	0	0	0	**139**
08:30 - 08:44	2	16	77	73	9	1	2	0	0	0	0	0	0	0	0	**180**
08:45 - 08:59	1	15	46	66	75	28	10	1	1	0	0	0	0	0	0	**243**
09:00 - 09:14	2	11	39	64	29	10	0	2	1	0	1	0	0	0	0	**159**
09:15 - 09:29	2	14	33	76	44	9	10	3	1	0	0	0	0	0	0	**192**
09:30 - 09:44	3	24	40	70	44	15	3	2	1	0	1	0	0	1	0	**204**
09:45 - 09:59	1	9	9	24	42	62	44	15	5	1	1	0	0	0	0	**213**
10:00 - 10:14	0	1	10	13	59	112	70	18	4	0	0	0	0	0	0	**287**
10:15 - 10:29	0	0	2	42	69	78	50	14	2	0	0	0	0	0	0	**257**
10:30 - 10:44	0	1	7	40	87	88	40	20	2	0	0	0	0	0	0	**285**
10:45 - 10:59	0	13	30	49	69	38	19	6	1	0	0	0	0	0	0	**225**
11:00 - 11:14	0	1	0	25	56	90	76	31	3	0	0	1	0	0	0	**283**
11:15 - 11:29	0	1	14	43	86	83	39	4	2	1	0	0	0	0	0	**273**
11:30 - 11:44	1	6	17	37	84	67	31	16	1	1	0	0	0	0	0	**261**
11:45 - 11:59	0	0	8	16	51	62	81	34	9	2	0	0	0	0	0	**263**
12:00 - 12:14	0	3	8	20	51	67	37	28	6	2	0	0	0	0	0	**222**
12:15 - 12:29	2	2	17	47	110	74	47	8	1	0	0	0	0	0	0	**308**
12:30 - 12:44	0	0	4	30	64	85	50	22	4	1	0	0	0	0	0	**260**

Daily Eastbound Speeds (MPH)

Study Date: Thursday, 09/20/2018
Unit ID: 0149
Location: SW 24TH ST / W OF SW 69TH AV

	0-5	5-10	10-15	15-20	20-25	25-30	30-35	35-40	40-45	45-50	50-55	55-60	60-65	65-70	70-75	Total
12:45 - 12:59	0	1	4	42	81	88	26	10	0	0	0	0	0	0	0	**252**
13:00 - 13:14	0	1	9	32	95	83	64	17	6	0	1	0	0	0	0	**308**
13:15 - 13:29	0	0	0	4	84	121	51	13	6	1	1	0	0	0	0	**281**
13:30 - 13:44	0	3	11	31	85	73	35	10	1	1	0	0	0	0	0	**250**
13:45 - 13:59	1	12	79	75	41	16	1	0	0	0	0	0	0	0	0	**225**
14:00 - 14:14	2	14	69	72	49	10	2	0	0	0	0	0	0	0	0	**218**
14:15 - 14:29	1	13	69	74	27	8	1	0	0	0	0	0	0	0	0	**193**
14:30 - 14:44	0	15	50	40	34	8	2	0	0	0	0	0	0	0	0	**149**
14:45 - 14:59	0	5	42	66	59	16	4	1	1	0	0	0	0	0	0	**194**
15:00 - 15:14	0	1	53	61	50	28	8	2	0	0	0	0	0	0	0	**203**
15:15 - 15:29	1	7	65	60	36	14	1	2	0	0	0	0	0	0	0	**186**
15:30 - 15:44	0	2	12	15	49	67	58	20	7	1	1	0	0	0	0	**232**
15:45 - 15:59	0	0	10	30	73	78	57	6	4	0	2	0	0	0	0	**260**
16:00 - 16:14	2	1	3	35	89	66	41	11	2	1	1	1	0	0	0	**253**
16:15 - 16:29	0	0	0	6	44	77	62	13	4	1	0	0	0	0	0	**207**
16:30 - 16:44	0	0	3	12	71	92	63	27	6	1	0	0	0	0	0	**275**
16:45 - 16:59	0	0	1	6	37	86	70	37	8	6	0	0	0	0	0	**251**
17:00 - 17:14	0	0	1	4	54	110	59	24	4	0	0	0	0	0	0	**256**
17:15 - 17:29	0	0	1	9	56	83	41	21	4	1	0	0	0	0	0	**216**
17:30 - 17:44	0	0	0	16	44	76	47	17	7	1	0	0	0	0	0	**208**
17:45 - 17:59	0	0	6	15	56	64	46	21	6	0	0	0	0	1	0	**215**
18:00 - 18:14	0	0	0	5	58	80	47	25	5	1	0	0	0	0	0	**221**
18:15 - 18:29	0	0	0	13	56	80	59	20	10	0	0	0	0	0	0	**238**
18:30 - 18:44	0	1	4	20	54	91	55	18	3	4	0	0	0	0	0	**250**
18:45 - 18:59	0	1	0	8	34	67	77	48	15	1	0	0	0	0	0	**251**
19:00 - 19:14	0	0	0	1	20	64	84	66	20	0	0	0	0	0	0	**255**
19:15 - 19:29	0	0	0	6	30	101	62	24	10	3	0	0	0	0	0	**236**
19:30 - 19:44	0	0	0	19	39	101	80	26	9	3	0	0	0	0	0	**277**
19:45 - 19:59	0	0	1	0	12	77	97	42	11	4	0	0	0	0	0	**244**
20:00 - 20:14	0	0	0	2	32	43	96	54	20	4	0	0	0	0	0	**251**
20:15 - 20:29	0	0	0	2	17	53	98	48	9	1	2	0	0	0	0	**230**
20:30 - 20:44	0	0	1	7	16	51	49	48	18	4	1	3	2	1	0	**201**
20:45 - 20:59	0	0	1	2	17	49	67	43	18	7	0	0	0	0	0	**204**
21:00 - 21:14	0	1	3	9	31	55	56	36	9	7	1	0	0	0	0	**208**
21:15 - 21:29	0	0	0	1	19	43	70	37	18	3	0	0	0	0	0	**191**
21:30 - 21:44	5	0	1	1	22	32	63	36	10	1	2	0	0	0	0	**173**
21:45 - 21:59	0	0	0	2	14	28	55	37	25	2	0	0	0	0	0	**163**
22:00 - 22:14	0	1	0	1	3	25	58	27	18	6	0	0	0	0	0	**139**
22:15 - 22:29	0	0	0	0	4	24	53	41	16	4	0	1	0	0	0	**143**
22:30 - 22:44	0	0	0	1	4	10	31	41	27	9	3	0	0	0	0	**126**
22:45 - 22:59	0	0	2	1	3	13	35	39	21	4	3	0	0	0	0	**121**
23:00 - 23:14	0	0	0	1	2	11	40	27	17	5	1	0	0	0	0	**104**
23:15 - 23:29	0	0	0	0	2	9	23	23	16	6	1	1	1	0	0	**82**
23:30 - 23:44	0	0	0	1	3	12	16	22	17	4	1	0	0	0	0	**76**
23:45 - 23:59	0	0	0	2	1	8	16	24	13	4	1	0	0	0	0	**69**
Totals	**29**	**303**	**1256**	**1957**	**3030**	**3701**	**3177**	**1760**	**752**	**244**	**65**	**10**	**6**	**3**	**0**	**16293**
Percent of Total	**0.2**	**1.9**	**7.7**	**12.0**	**18.6**	**22.7**	**19.5**	**10.8**	**4.6**	**1.5**	**0.4**	**0.1**	**0.0**	**0.0**	**0.0**	**100**
Percent of AM	**0.2**	**3.5**	**11.7**	**16.9**	**17.7**	**17.4**	**14.7**	**9.6**	**5.1**	**2.3**	**0.7**	**0.1**	**0.0**	**0.0**	**0.0**	**100**
Percent of PM	**0.1**	**0.8**	**5.3**	**9.0**	**19.2**	**26.0**	**22.4**	**11.5**	**4.3**	**1.0**	**0.2**	**0.1**	**0.0**	**0.0**	**0.0**	**100**

Daily Eastbound Speeds (MPH)

Study Date: Thursday, 09/20/2018
Unit ID: 0149
Location: SW 24TH ST / W OF SW 69TH AV

Standard Deviation:	9.0 MPH	Ten Mile Pace:	25 to 34 MPH	85th Percentile:	36.3 MPH
Mean Speed:	27.5 MPH	Percent in Ten Mile Pace:	42.2%	15th Percentile:	17.6 MPH
Median Speed:	27.5 MPH			90th Percentile:	39.1 MPH
Modal Speed:	28.0 MPH			95th Percentile:	42.1 MPH

Daily Westbound Speeds (MPH)

Study Date: Tuesday, 09/18/2018
Unit ID: 0172
Location: SW 24TH ST / W OF SW 69TH AV

	0-5	5-10	10-15	15-20	20-25	25-30	30-35	35-40	40-45	45-50	50-55	55-60	60-65	65-70	70-75	Total
00:00 - 00:14	0	0	1	0	0	2	10	15	14	5	1	1	0	0	0	**49**
00:15 - 00:29	0	0	1	0	1	3	15	19	9	5	0	0	0	0	0	**53**
00:30 - 00:44	0	0	0	0	2	3	11	7	7	2	1	0	0	0	0	**33**
00:45 - 00:59	0	0	1	0	0	0	6	13	5	3	0	0	0	0	0	**28**
01:00 - 01:14	0	0	0	0	2	2	5	3	8	3	0	0	0	0	0	**23**
01:15 - 01:29	0	0	0	1	1	3	8	9	1	1	0	0	0	0	0	**24**
01:30 - 01:44	0	0	0	1	0	0	5	3	8	3	0	0	0	0	0	**20**
01:45 - 01:59	0	0	0	0	1	0	3	3	5	0	0	0	0	0	0	**12**
02:00 - 02:14	0	0	0	1	0	4	5	4	3	1	0	0	0	0	0	**18**
02:15 - 02:29	0	0	0	0	0	0	1	4	5	1	0	0	0	0	0	**11**
02:30 - 02:44	0	0	0	0	0	0	2	2	3	1	0	1	0	0	0	**9**
02:45 - 02:59	0	0	0	0	0	1	2	2	2	0	0	0	0	0	0	**7**
03:00 - 03:14	0	0	0	0	0	1	4	2	3	1	0	0	0	0	0	**11**
03:15 - 03:29	0	0	0	0	1	0	2	2	0	0	2	0	0	0	0	**7**
03:30 - 03:44	0	0	1	0	0	0	1	7	4	2	1	0	0	0	0	**16**
03:45 - 03:59	0	0	1	0	0	2	2	2	2	1	0	0	0	0	0	**10**
04:00 - 04:14	0	0	0	2	1	1	2	11	5	3	0	0	0	0	0	**25**
04:15 - 04:29	0	0	2	1	1	3	4	6	3	2	0	0	0	0	0	**22**
04:30 - 04:44	0	1	1	1	1	1	3	5	5	1	0	0	0	0	0	**19**
04:45 - 04:59	0	0	0	3	0	4	7	12	11	7	1	0	0	0	0	**45**
05:00 - 05:14	0	0	2	3	3	9	16	10	6	7	0	0	0	0	0	**56**
05:15 - 05:29	0	0	3	4	1	3	6	9	13	2	0	0	0	0	0	**41**
05:30 - 05:44	0	1	5	8	4	6	6	23	9	1	0	0	0	0	0	**63**
05:45 - 05:59	0	0	1	6	2	7	23	19	11	1	2	0	0	0	0	**72**
06:00 - 06:14	0	0	1	10	1	13	34	15	15	7	1	0	0	0	0	**97**
06:15 - 06:29	0	0	4	8	7	12	45	31	17	3	0	0	0	0	0	**127**
06:30 - 06:44	0	1	1	11	6	28	62	54	11	2	0	0	0	0	0	**176**
06:45 - 06:59	0	0	4	7	12	48	58	30	15	4	1	0	0	0	0	**179**
07:00 - 07:14	0	0	2	19	52	74	42	16	5	1	0	0	0	0	0	**211**
07:15 - 07:29	0	0	25	90	56	7	4	1	0	0	0	0	0	0	0	**183**
07:30 - 07:44	0	1	20	92	49	6	1	0	0	0	0	0	0	0	0	**169**
07:45 - 07:59	1	4	28	106	37	7	2	1	0	0	0	0	0	0	0	**186**
08:00 - 08:14	0	3	35	109	45	8	0	1	0	0	0	0	0	0	0	**201**
08:15 - 08:29	0	1	21	110	58	12	2	0	0	0	0	0	0	0	0	**204**
08:30 - 08:44	0	0	33	113	50	14	2	0	0	0	0	0	0	0	0	**212**
08:45 - 08:59	0	1	6	16	45	75	59	38	10	2	0	0	0	0	0	**252**
09:00 - 09:14	0	0	4	8	25	47	85	45	29	8	1	0	0	0	0	**252**
09:15 - 09:29	0	0	1	7	26	64	69	44	13	2	0	0	0	0	0	**226**
09:30 - 09:44	0	0	5	10	20	76	61	39	22	3	0	0	0	0	0	**236**
09:45 - 09:59	0	2	2	5	37	85	103	21	7	0	0	0	0	0	0	**262**
10:00 - 10:14	0	0	2	12	33	88	75	23	7	1	0	0	0	0	0	**241**
10:15 - 10:29	1	2	8	13	21	81	88	23	2	2	0	0	0	0	0	**241**
10:30 - 10:44	0	3	5	13	35	85	86	36	1	1	0	0	0	0	0	**265**
10:45 - 10:59	2	0	2	14	32	65	68	21	3	1	0	0	0	0	0	**208**
11:00 - 11:14	3	1	13	27	47	75	69	22	3	1	0	0	0	0	0	**261**
11:15 - 11:29	0	3	10	15	49	85	66	24	9	0	0	0	0	0	0	**261**
11:30 - 11:44	1	3	13	21	32	65	62	23	3	1	0	1	0	0	0	**225**
11:45 - 11:59	0	1	2	7	23	89	84	39	9	3	0	0	0	0	0	**257**
12:00 - 12:14	0	0	2	9	48	75	50	31	9	0	0	0	0	0	0	**224**
12:15 - 12:29	0	2	10	23	45	95	69	21	4	0	0	0	0	0	0	**269**
12:30 - 12:44	2	1	4	11	57	89	80	27	5	2	1	0	0	0	0	**279**

Daily Westbound Speeds (MPH)

Study Date: Tuesday, 09/18/2018
Unit ID: 0172
Location: SW 24TH ST / W OF SW 69TH AV

	0-5	5-10	10-15	15-20	20-25	25-30	30-35	35-40	40-45	45-50	50-55	55-60	60-65	65-70	70-75	Total
12:45 - 12:59	0	1	4	10	38	57	94	37	5	1	0	0	0	0	0	**247**
13:00 - 13:14	0	3	7	8	68	92	61	20	3	0	0	0	0	0	0	**262**
13:15 - 13:29	0	3	5	13	47	95	80	33	3	0	0	0	0	0	0	**279**
13:30 - 13:44	2	26	29	16	14	3	1	0	0	0	0	0	0	0	0	**91**
13:45 - 13:59	5	4	22	58	24	5	1	1	0	0	0	0	0	0	0	**120**
14:00 - 14:14	1	4	24	128	52	3	5	0	0	0	0	0	0	0	0	**217**
14:15 - 14:29	0	5	44	83	36	7	2	0	0	0	0	0	1	0	0	**178**
14:30 - 14:44	2	3	48	83	34	9	1	1	0	0	0	0	0	0	0	**181**
14:45 - 14:59	0	11	43	103	40	6	1	0	0	0	0	0	0	0	0	**204**
15:00 - 15:14	0	7	41	85	43	11	4	0	0	0	0	0	0	0	0	**191**
15:15 - 15:29	4	10	38	104	34	16	4	1	0	0	0	0	0	0	0	**211**
15:30 - 15:44	4	23	18	2	1	0	0	0	0	0	0	0	0	0	0	**48**
15:45 - 15:59	6	21	4	2	1	0	0	0	0	0	0	0	0	0	0	**34**
16:00 - 16:14	8	14	14	20	29	1	0	0	0	0	0	0	0	0	0	**86**
16:15 - 16:29	1	23	24	44	25	1	0	0	0	0	0	0	0	0	0	**118**
16:30 - 16:44	2	22	18	27	11	1	1	0	0	0	0	0	0	0	0	**82**
16:45 - 16:59	7	11	12	7	4	0	0	0	0	0	0	0	0	0	0	**41**
17:00 - 17:14	3	12	42	28	27	3	0	0	0	0	2	0	0	0	0	**117**
17:15 - 17:29	3	19	22	40	17	2	2	0	0	0	0	0	0	0	0	**105**
17:30 - 17:44	6	13	10	5	2	0	0	0	0	0	0	0	0	0	0	**36**
17:45 - 17:59	3	23	21	19	13	1	0	0	0	0	0	0	0	0	0	**80**
18:00 - 18:14	6	14	27	18	9	0	0	0	0	0	0	0	0	0	0	**74**
18:15 - 18:29	1	8	24	30	10	1	0	0	0	0	0	0	0	0	0	**74**
18:30 - 18:44	5	22	30	28	21	5	0	0	0	1	0	0	0	0	0	**112**
18:45 - 18:59	5	17	40	68	28	0	0	0	0	0	0	0	0	0	0	**158**
19:00 - 19:14	0	4	14	33	68	64	41	25	5	1	0	0	0	0	0	**255**
19:15 - 19:29	0	9	12	16	39	86	66	25	6	1	0	0	0	0	0	**260**
19:30 - 19:44	0	3	6	22	43	97	82	26	8	2	0	0	0	0	0	**289**
19:45 - 19:59	0	0	4	11	49	79	67	31	7	0	0	0	0	0	0	**248**
20:00 - 20:14	0	0	5	7	54	81	55	26	7	0	0	0	0	0	0	**235**
20:15 - 20:29	0	0	1	13	19	88	86	35	3	0	0	0	0	0	0	**245**
20:30 - 20:44	0	2	4	15	35	54	65	26	5	0	0	0	0	0	0	**206**
20:45 - 20:59	0	0	0	5	11	69	63	34	6	2	0	0	0	0	0	**190**
21:00 - 21:14	0	0	1	4	9	56	80	34	9	1	0	0	0	0	0	**194**
21:15 - 21:29	0	0	2	4	4	30	80	43	9	1	0	0	0	0	0	**173**
21:30 - 21:44	0	0	1	3	4	31	63	38	17	6	1	0	0	0	0	**164**
21:45 - 21:59	0	0	3	3	3	23	67	37	9	1	0	0	0	0	0	**146**
22:00 - 22:14	0	0	2	4	6	28	46	47	21	1	0	0	0	0	0	**155**
22:15 - 22:29	0	0	2	2	1	11	56	35	19	0	1	0	0	0	0	**127**
22:30 - 22:44	1	0	1	0	1	7	32	41	14	5	0	0	0	0	0	**102**
22:45 - 22:59	0	0	0	1	3	7	31	24	20	4	1	0	0	0	0	**91**
23:00 - 23:14	0	0	0	0	2	6	24	31	19	5	2	0	0	0	0	**89**
23:15 - 23:29	0	0	0	1	8	6	17	29	12	5	2	0	0	0	0	**80**
23:30 - 23:44	0	0	0	2	0	10	29	29	13	1	0	0	0	0	0	**84**
23:45 - 23:59	0	0	1	1	0	0	18	17	19	10	3	0	0	0	0	**69**
Totals	**85**	**368**	**952**	**2093**	**1956**	**2675**	**2900**	**1544**	**580**	**145**	**24**	**3**	**1**	**0**	**0**	**13326**
Percent of Total	**0.6**	**2.8**	**7.1**	**15.7**	**14.7**	**20.1**	**21.8**	**11.6**	**4.4**	**1.1**	**0.2**	**0.0**	**0.0**	**0.0**	**0.0**	**100**
Percent of AM	**0.1**	**0.5**	**4.6**	**15.1**	**14.1**	**21.8**	**23.7**	**12.7**	**5.6**	**1.6**	**0.2**	**0.1**	**0.0**	**0.0**	**0.0**	**100**
Percent of PM	**1.0**	**4.5**	**9.1**	**16.2**	**15.1**	**18.8**	**20.3**	**10.7**	**3.4**	**0.7**	**0.2**	**0.0**	**0.0**	**0.0**	**0.0**	**100**

Daily Westbound Speeds (MPH)

Study Date: Tuesday, 09/18/2018
Unit ID: 0172
Location: SW 24TH ST / W OF SW 69TH AV

Standard Deviation:	9.2 MPH	Ten Mile Pace:	25 to 34 MPH	85th Percentile:	36.2 MPH
Mean Speed:	27.1 MPH	Percent in Ten Mile Pace:	41.8%	15th Percentile:	16.7 MPH
Median Speed:	27.7 MPH			90th Percentile:	38.7 MPH
Modal Speed:	33.0 MPH			95th Percentile:	40.9 MPH

Daily Westbound Speeds (MPH)

Study Date: Wednesday, 09/19/2018
Unit ID: 0172
Location: SW 24TH ST / W OF SW 69TH AV

	0-5	5-10	10-15	15-20	20-25	25-30	30-35	35-40	40-45	45-50	50-55	55-60	60-65	65-70	70-75	Total
00:00 - 00:14	0	0	0	1	0	0	14	19	10	4	1	1	0	0	0	**50**
00:15 - 00:29	0	0	0	0	0	7	13	15	5	4	1	0	0	0	0	**45**
00:30 - 00:44	0	0	0	0	1	1	8	10	13	2	1	0	0	0	0	**36**
00:45 - 00:59	0	0	0	0	0	2	5	12	7	3	0	0	0	0	0	**29**
01:00 - 01:14	0	0	0	0	0	0	2	16	6	1	0	0	0	0	0	**25**
01:15 - 01:29	0	0	0	0	0	1	4	12	6	2	2	0	0	0	0	**27**
01:30 - 01:44	0	1	1	0	0	0	3	10	6	3	0	0	0	0	0	**24**
01:45 - 01:59	0	0	2	0	0	1	4	7	2	0	0	0	0	0	0	**16**
02:00 - 02:14	0	0	2	0	0	0	4	3	2	2	0	0	0	0	0	**13**
02:15 - 02:29	0	0	0	0	1	2	6	6	2	2	0	1	0	0	0	**20**
02:30 - 02:44	0	0	0	0	0	0	3	6	4	0	0	0	0	0	0	**13**
02:45 - 02:59	0	0	0	0	0	1	4	5	3	1	0	0	0	0	0	**14**
03:00 - 03:14	0	0	0	0	0	0	2	6	4	0	0	0	0	0	0	**12**
03:15 - 03:29	0	0	0	0	0	3	2	4	3	2	0	0	0	0	0	**14**
03:30 - 03:44	0	0	0	0	1	0	1	6	2	0	0	0	0	0	0	**10**
03:45 - 03:59	0	0	1	1	0	2	4	5	3	0	0	0	0	0	0	**16**
04:00 - 04:14	0	0	0	1	0	4	3	4	2	3	0	0	0	0	0	**17**
04:15 - 04:29	0	0	0	0	0	1	3	5	4	1	2	0	0	0	0	**16**
04:30 - 04:44	0	0	1	2	0	0	9	11	5	3	1	0	0	0	0	**32**
04:45 - 04:59	0	0	1	3	0	5	8	7	8	3	0	0	0	0	0	**35**
05:00 - 05:14	0	0	1	0	1	0	10	10	5	7	1	0	0	0	0	**35**
05:15 - 05:29	0	0	2	4	1	0	10	11	11	2	3	0	0	0	0	**44**
05:30 - 05:44	0	0	2	8	3	6	14	15	7	6	3	1	0	0	0	**65**
05:45 - 05:59	0	0	3	7	5	3	20	20	13	3	2	1	0	0	0	**77**
06:00 - 06:14	0	0	3	8	3	2	22	26	14	6	0	0	0	0	0	**84**
06:15 - 06:29	0	0	4	4	5	10	35	18	14	5	1	1	0	0	0	**97**
06:30 - 06:44	0	0	4	7	8	11	37	40	15	7	1	1	0	0	0	**131**
06:45 - 06:59	0	0	3	8	9	45	52	37	10	3	1	0	0	0	0	**168**
07:00 - 07:14	1	1	2	8	23	49	61	16	9	3	0	0	0	0	0	**173**
07:15 - 07:29	0	0	5	6	42	75	39	18	13	1	0	0	0	0	0	**199**
07:30 - 07:44	0	0	2	17	56	71	30	12	3	0	0	0	0	0	0	**191**
07:45 - 07:59	0	0	5	10	37	50	38	19	4	2	0	0	0	0	0	**165**
08:00 - 08:14	0	0	8	18	67	67	46	16	2	1	0	0	0	0	0	**225**
08:15 - 08:29	0	1	6	26	52	41	38	11	7	0	1	0	0	0	0	**183**
08:30 - 08:44	0	2	2	8	44	101	60	14	4	0	0	0	0	0	0	**235**
08:45 - 08:59	0	2	6	14	21	50	76	38	15	2	0	0	0	0	0	**224**
09:00 - 09:14	0	0	0	6	26	33	80	48	24	2	0	1	0	0	0	**220**
09:15 - 09:29	0	1	8	14	32	75	85	30	4	1	0	0	0	0	0	**250**
09:30 - 09:44	0	0	3	19	67	99	50	28	3	0	0	0	0	0	0	**269**
09:45 - 09:59	1	2	5	8	37	90	81	22	3	0	0	0	0	0	0	**249**
10:00 - 10:14	0	1	7	15	62	80	53	20	5	0	0	0	0	0	0	**243**
10:15 - 10:29	0	0	5	6	54	90	75	24	8	1	1	0	0	0	0	**264**
10:30 - 10:44	0	2	5	16	21	61	86	27	7	0	0	0	0	0	0	**225**
10:45 - 10:59	0	1	7	9	43	65	92	32	5	2	0	0	0	0	0	**256**
11:00 - 11:14	0	7	13	14	43	72	66	22	6	1	0	0	0	0	0	**244**
11:15 - 11:29	0	0	6	18	34	66	80	40	11	4	0	0	0	0	0	**259**
11:30 - 11:44	0	0	3	3	26	83	85	41	5	1	0	0	0	0	0	**247**
11:45 - 11:59	0	2	7	12	35	88	83	36	4	1	0	0	0	0	0	**268**
12:00 - 12:14	0	1	6	14	44	80	78	25	2	0	1	0	0	0	0	**251**
12:15 - 12:29	3	11	17	19	49	60	69	16	7	0	0	0	0	0	0	**251**
12:30 - 12:44	6	7	7	20	37	76	79	20	3	2	1	0	0	0	0	**258**

Daily Westbound Speeds (MPH)

Study Date: Wednesday, 09/19/2018
Unit ID: 0172
Location: SW 24TH ST / W OF SW 69TH AV

	0-5	5-10	10-15	15-20	20-25	25-30	30-35	35-40	40-45	45-50	50-55	55-60	60-65	65-70	70-75	Total
12:45 - 12:59	0	2	2	13	63	95	64	26	0	1	0	0	0	0	0	**266**
13:00 - 13:14	1	3	11	26	39	60	62	17	9	1	0	0	0	0	0	**229**
13:15 - 13:29	3	8	20	38	21	21	23	6	1	0	0	0	0	0	0	**141**
13:30 - 13:44	8	19	24	14	21	12	11	2	0	1	0	0	0	0	0	**112**
13:45 - 13:59	1	4	5	18	72	91	40	12	1	0	0	0	0	0	0	**244**
14:00 - 14:14	0	0	4	19	53	67	71	29	6	1	0	0	0	0	0	**250**
14:15 - 14:29	1	5	10	15	57	77	38	16	7	1	0	0	0	0	0	**227**
14:30 - 14:44	9	13	28	25	39	36	8	5	2	0	0	0	0	0	0	**165**
14:45 - 14:59	1	10	23	22	61	61	24	7	2	0	0	0	0	0	0	**211**
15:00 - 15:14	0	0	5	21	47	117	74	26	6	2	0	0	0	0	0	**298**
15:15 - 15:29	0	5	19	19	74	57	40	4	2	1	0	0	0	0	0	**221**
15:30 - 15:44	9	15	20	26	27	22	21	12	2	0	0	0	0	0	0	**154**
15:45 - 15:59	0	11	6	22	53	65	35	9	4	0	0	0	0	0	0	**205**
16:00 - 16:14	2	14	19	20	24	13	5	0	0	1	0	0	0	0	0	**98**
16:15 - 16:29	3	12	15	23	38	17	15	2	1	0	0	0	0	0	0	**126**
16:30 - 16:44	5	8	10	14	39	54	23	11	1	0	0	0	0	0	0	**165**
16:45 - 16:59	1	13	17	57	59	53	18	17	1	0	0	0	0	0	0	**236**
17:00 - 17:14	3	8	17	38	53	44	20	15	4	0	2	0	0	0	0	**204**
17:15 - 17:29	5	11	4	11	13	16	3	1	0	0	0	0	0	0	0	**64**
17:30 - 17:44	1	9	23	27	50	39	22	9	0	0	1	0	0	0	0	**181**
17:45 - 17:59	6	12	28	31	52	33	34	6	0	2	0	0	0	0	0	**204**
18:00 - 18:14	1	12	13	9	10	27	17	6	1	0	0	0	0	0	0	**96**
18:15 - 18:29	1	16	23	34	34	15	3	0	0	0	0	0	0	0	0	**126**
18:30 - 18:44	5	9	26	30	68	80	27	16	1	0	0	0	0	0	0	**262**
18:45 - 18:59	2	3	17	26	61	78	73	37	6	0	0	0	0	0	0	**303**
19:00 - 19:14	0	4	7	31	41	68	83	23	9	5	0	0	0	0	0	**271**
19:15 - 19:29	0	5	10	19	32	116	63	24	1	0	0	0	0	0	0	**270**
19:30 - 19:44	0	5	9	17	38	85	82	29	10	1	0	0	0	0	0	**276**
19:45 - 19:59	0	1	7	18	62	97	70	29	4	1	0	0	0	0	0	**289**
20:00 - 20:14	0	2	8	9	37	62	83	30	10	1	0	0	0	0	1	**243**
20:15 - 20:29	0	0	2	7	25	101	87	37	6	0	0	0	0	0	0	**265**
20:30 - 20:44	0	0	1	8	21	92	59	31	7	3	0	0	0	0	0	**222**
20:45 - 20:59	0	1	1	4	16	35	61	57	13	4	0	0	0	0	0	**192**
21:00 - 21:14	0	0	2	3	11	42	70	42	5	3	0	0	0	0	0	**178**
21:15 - 21:29	0	0	2	2	9	44	100	33	14	2	0	0	0	0	0	**206**
21:30 - 21:44	0	0	1	2	7	31	73	34	7	2	0	0	0	0	0	**157**
21:45 - 21:59	0	0	2	5	5	33	58	38	19	1	0	0	0	0	0	**161**
22:00 - 22:14	0	0	2	5	5	22	44	51	14	4	1	0	0	0	0	**148**
22:15 - 22:29	0	0	2	2	0	16	40	44	8	2	1	0	0	0	0	**115**
22:30 - 22:44	0	0	0	0	3	13	35	45	19	4	2	0	1	0	0	**122**
22:45 - 22:59	0	0	0	2	1	6	27	26	16	8	1	1	0	0	0	**88**
23:00 - 23:14	0	0	0	4	1	8	39	26	20	2	0	0	0	0	0	**100**
23:15 - 23:29	0	0	0	6	1	10	30	31	12	7	2	0	0	0	0	**99**
23:30 - 23:44	0	0	0	1	2	12	23	25	7	5	0	0	0	0	0	**75**
23:45 - 23:59	0	0	0	0	1	5	18	26	9	3	0	0	0	0	0	**62**
Totals	**79**	**282**	**610**	**1097**	**2436**	**3877**	**3748**	**1893**	**607**	**168**	**34**	**8**	**1**	**0**	**1**	**14841**
Percent of Total	**0.5**	**1.9**	**4.1**	**7.4**	**16.4**	**26.1**	**25.3**	**12.8**	**4.1**	**1.1**	**0.2**	**0.1**	**0.0**	**0.0**	**0.0**	**100**
Percent of AM	**0.0**	**0.4**	**2.3**	**5.2**	**14.9**	**26.3**	**27.9**	**14.9**	**5.7**	**1.7**	**0.4**	**0.1**	**0.0**	**0.0**	**0.0**	**100**
Percent of PM	**0.8**	**2.9**	**5.2**	**8.8**	**17.3**	**26.0**	**23.6**	**11.4**	**3.1**	**0.8**	**0.1**	**0.0**	**0.0**	**0.0**	**0.0**	**100**

Daily Westbound Speeds (MPH)

Study Date: Wednesday, 09/19/2018
Unit ID: 0172
Location: SW 24TH ST / W OF SW 69TH AV

Standard Deviation:	8.3 MPH	Ten Mile Pace:	25 to 34 MPH	85th Percentile:	36.5 MPH
Mean Speed:	28.8 MPH	Percent in Ten Mile Pace:	51.4%		
Median Speed:	29.5 MPH			15th Percentile:	20.4 MPH
Modal Speed:	28.0 MPH			90th Percentile:	38.9 MPH
				95th Percentile:	40.8 MPH

Daily Westbound Speeds (MPH)

Study Date: Thursday, 09/20/2018
Unit ID: 0172
Location: SW 24TH ST / W OF SW 69TH AV

	0-5	5-10	10-15	15-20	20-25	25-30	30-35	35-40	40-45	45-50	50-55	55-60	60-65	65-70	70-75	Total
00:00 - 00:14	0	1	1	1	1	3	8	18	13	5	1	0	0	0	0	**52**
00:15 - 00:29	0	0	0	0	0	5	6	15	14	5	1	0	0	0	0	**46**
00:30 - 00:44	0	0	0	1	1	5	4	17	10	5	1	0	0	0	0	**44**
00:45 - 00:59	0	0	0	0	0	4	9	11	5	6	1	0	0	0	0	**36**
01:00 - 01:14	0	0	2	0	0	1	5	13	5	2	0	1	0	0	0	**29**
01:15 - 01:29	0	0	1	1	0	0	5	7	6	2	0	0	0	0	0	**22**
01:30 - 01:44	0	0	0	0	1	0	5	14	11	1	0	0	0	0	0	**32**
01:45 - 01:59	0	0	0	1	1	2	7	6	0	3	0	0	0	0	0	**20**
02:00 - 02:14	0	0	0	1	1	1	1	6	2	2	0	0	0	0	0	**14**
02:15 - 02:29	0	0	0	1	0	0	8	5	2	2	0	0	0	0	0	**18**
02:30 - 02:44	0	0	1	0	0	2	3	4	3	1	0	0	0	0	0	**14**
02:45 - 02:59	0	0	0	0	1	2	1	5	2	3	2	0	0	0	0	**16**
03:00 - 03:14	0	0	0	0	0	0	1	1	3	1	0	0	0	0	0	**6**
03:15 - 03:29	0	0	0	0	0	0	4	3	4	0	0	0	0	0	0	**11**
03:30 - 03:44	0	0	0	1	1	1	4	4	3	1	0	0	0	0	0	**15**
03:45 - 03:59	0	0	1	1	1	0	2	4	3	0	0	0	0	0	0	**12**
04:00 - 04:14	0	0	1	4	0	1	0	6	3	1	0	1	0	0	0	**17**
04:15 - 04:29	0	0	0	1	0	0	4	6	4	1	0	0	0	0	0	**16**
04:30 - 04:44	0	0	1	1	2	0	6	7	5	1	1	0	0	0	0	**24**
04:45 - 04:59	0	0	1	3	1	1	6	9	7	4	2	0	0	0	0	**34**
05:00 - 05:14	0	1	1	2	2	1	8	10	10	3	0	0	0	0	0	**38**
05:15 - 05:29	0	0	0	5	4	3	9	17	18	5	3	0	0	0	0	**64**
05:30 - 05:44	0	0	3	9	2	4	13	22	10	5	2	0	0	0	0	**70**
05:45 - 05:59	0	0	1	1	2	12	22	25	9	4	1	0	0	0	0	**77**
06:00 - 06:14	0	0	3	10	2	14	14	29	14	5	2	0	0	0	0	**93**
06:15 - 06:29	0	0	2	6	6	17	44	28	10	4	0	1	0	0	0	**118**
06:30 - 06:44	0	0	2	8	8	16	53	47	21	5	2	0	0	0	0	**162**
06:45 - 06:59	0	0	2	8	5	24	47	40	22	10	0	0	0	0	0	**158**
07:00 - 07:14	0	2	2	7	48	63	34	29	7	1	0	0	0	0	0	**193**
07:15 - 07:29	0	1	10	79	80	5	4	2	0	0	0	0	0	0	0	**181**
07:30 - 07:44	0	0	12	104	74	11	1	0	0	0	0	0	0	0	0	**202**
07:45 - 07:59	0	0	14	108	51	7	1	0	0	1	0	0	0	0	0	**182**
08:00 - 08:14	0	1	29	115	54	12	2	0	0	0	0	0	0	0	0	**213**
08:15 - 08:29	0	1	33	95	49	16	3	1	0	0	0	0	1	0	0	**199**
08:30 - 08:44	0	2	27	98	69	9	1	0	0	0	0	0	0	0	0	**206**
08:45 - 08:59	1	2	5	20	30	57	71	36	8	3	0	0	0	0	0	**233**
09:00 - 09:14	0	0	2	9	28	57	66	60	12	2	1	0	0	0	0	**237**
09:15 - 09:29	0	0	2	13	24	81	79	31	8	7	0	0	0	0	0	**245**
09:30 - 09:44	0	0	2	14	41	56	60	34	12	2	0	0	0	0	0	**221**
09:45 - 09:59	0	0	1	7	32	45	89	49	14	2	0	0	0	0	0	**239**
10:00 - 10:14	1	1	3	11	14	59	97	35	4	1	1	0	0	0	0	**227**
10:15 - 10:29	0	0	6	10	31	84	82	23	8	0	0	0	0	0	0	**244**
10:30 - 10:44	0	1	6	30	26	90	77	15	2	1	0	0	0	0	0	**248**
10:45 - 10:59	0	0	5	12	40	102	76	22	6	1	0	0	0	0	0	**264**
11:00 - 11:14	0	1	2	7	24	79	62	35	12	0	0	0	0	0	0	**222**
11:15 - 11:29	0	4	5	14	40	82	60	32	7	0	1	0	1	0	0	**246**
11:30 - 11:44	0	1	3	15	54	78	76	26	2	0	0	0	0	0	0	**255**
11:45 - 11:59	0	0	7	24	53	70	74	21	7	1	0	0	0	0	0	**257**
12:00 - 12:14	0	2	10	22	50	85	59	25	2	0	0	0	0	0	0	**255**
12:15 - 12:29	0	2	8	17	65	64	58	21	5	0	0	0	0	0	0	**240**
12:30 - 12:44	0	2	2	5	45	86	67	25	8	0	0	0	0	0	0	**240**

Daily Westbound Speeds (MPH)

Study Date: Thursday, 09/20/2018
Unit ID: 0172
Location: SW 24TH ST / W OF SW 69TH AV

	0-5	5-10	10-15	15-20	20-25	25-30	30-35	35-40	40-45	45-50	50-55	55-60	60-65	65-70	70-75	Total
12:45 - 12:59	0	1	4	20	41	62	74	34	8	0	0	0	0	0	0	**244**
13:00 - 13:14	0	0	1	23	55	118	69	15	2	2	0	0	0	0	0	**285**
13:15 - 13:29	0	1	2	15	60	80	73	26	5	0	0	0	0	0	0	**262**
13:30 - 13:44	1	0	2	21	47	86	53	10	3	3	3	0	0	0	0	**229**
13:45 - 13:59	1	3	31	77	50	18	7	1	0	0	0	0	0	0	0	**188**
14:00 - 14:14	5	8	28	35	10	2	0	0	0	0	0	0	0	0	0	**88**
14:15 - 14:29	7	12	26	42	9	5	0	0	0	0	0	0	0	0	0	**101**
14:30 - 14:44	1	13	31	50	22	1	0	0	0	0	0	0	0	0	0	**118**
14:45 - 14:59	1	25	17	8	0	0	0	0	0	0	0	0	0	0	0	**51**
15:00 - 15:14	3	22	41	36	24	2	1	0	0	0	0	0	0	0	0	**129**
15:15 - 15:29	5	23	39	19	1	0	0	0	0	0	0	0	0	0	0	**87**
15:30 - 15:44	7	12	3	1	0	0	0	0	0	0	0	0	0	0	0	**23**
15:45 - 15:59	2	25	31	22	8	1	0	0	0	0	0	0	0	0	1	**90**
16:00 - 16:14	1	29	15	12	3	0	0	0	0	0	0	0	0	0	0	**60**
16:15 - 16:29	6	13	15	15	22	2	0	0	0	0	0	0	0	0	0	**73**
16:30 - 16:44	1	22	33	30	20	9	1	0	0	0	0	0	0	0	0	**116**
16:45 - 16:59	2	9	10	19	28	53	36	18	6	1	0	0	0	0	0	**182**
17:00 - 17:14	2	9	11	14	25	53	47	16	3	2	0	0	0	0	0	**182**
17:15 - 17:29	7	14	33	42	7	1	0	0	0	0	0	0	0	0	0	**104**
17:30 - 17:44	3	22	18	23	10	0	0	0	0	0	0	0	0	0	0	**76**
17:45 - 17:59	10	12	11	3	0	0	0	0	1	0	0	0	0	0	0	**37**
18:00 - 18:14	3	21	4	3	1	2	0	0	0	0	0	0	0	0	0	**34**
18:15 - 18:29	4	5	16	18	31	41	21	11	4	0	0	0	0	0	0	**151**
18:30 - 18:44	1	21	44	48	42	9	1	0	0	0	0	0	0	0	0	**166**
18:45 - 18:59	1	4	10	26	61	79	74	28	3	0	0	0	0	0	0	**286**
19:00 - 19:14	0	2	3	25	43	82	77	39	5	0	0	0	0	0	0	**276**
19:15 - 19:29	0	3	12	36	74	66	54	22	2	1	0	1	0	0	0	**271**
19:30 - 19:44	0	1	5	20	44	99	76	29	2	0	0	0	0	0	0	**276**
19:45 - 19:59	0	1	1	8	19	75	92	50	10	1	1	0	0	0	0	**258**
20:00 - 20:14	0	0	4	5	27	62	97	43	9	3	3	0	0	0	0	**253**
20:15 - 20:29	0	0	3	6	22	58	95	40	15	0	0	0	0	0	0	**239**
20:30 - 20:44	0	0	1	6	19	74	95	35	16	1	0	0	0	0	0	**247**
20:45 - 20:59	0	0	3	4	26	55	81	34	8	2	0	0	0	0	0	**213**
21:00 - 21:14	0	1	1	3	5	55	88	33	7	0	1	0	0	0	0	**194**
21:15 - 21:29	0	0	1	4	4	25	69	54	14	3	0	0	0	0	0	**174**
21:30 - 21:44	0	0	0	0	7	35	64	50	11	3	1	0	0	0	0	**171**
21:45 - 21:59	0	1	0	0	4	18	51	55	13	1	2	0	0	0	0	**145**
22:00 - 22:14	0	0	0	2	5	22	58	48	17	1	1	0	0	0	0	**154**
22:15 - 22:29	0	0	1	1	6	16	46	36	17	5	1	0	0	0	0	**129**
22:30 - 22:44	0	0	1	5	2	11	43	47	17	5	0	0	0	0	0	**131**
22:45 - 22:59	0	1	0	3	4	8	27	38	14	7	3	0	0	0	0	**105**
23:00 - 23:14	0	0	0	1	0	3	40	45	14	6	1	0	0	0	0	**110**
23:15 - 23:29	0	0	3	4	3	9	41	30	20	3	4	0	0	0	0	**117**
23:30 - 23:44	0	0	1	1	3	13	18	21	20	6	2	0	0	0	0	**85**
23:45 - 23:59	0	0	0	1	3	8	33	33	12	6	0	0	0	0	0	**96**
Totals	**76**	**361**	**735**	**1659**	**1961**	**2835**	**3200**	**1842**	**621**	**171**	**45**	**4**	**2**	**0**	**1**	**13513**
Percent of Total	**0.6**	**2.7**	**5.4**	**12.3**	**14.5**	**21.0**	**23.7**	**13.6**	**4.6**	**1.3**	**0.3**	**0.0**	**0.0**	**0.0**	**0.0**	**100**
Percent of AM	**0.0**	**0.3**	**3.4**	**14.9**	**15.7**	**20.5**	**22.8**	**14.4**	**5.7**	**1.9**	**0.4**	**0.1**	**0.0**	**0.0**	**0.0**	**100**
Percent of PM	**1.0**	**4.4**	**6.9**	**10.3**	**13.7**	**21.4**	**24.4**	**13.1**	**3.8**	**0.8**	**0.3**	**0.0**	**0.0**	**0.0**	**0.0**	**100**

Daily Westbound Speeds (MPH)

Study Date: Thursday, 09/20/2018
Unit ID: 0172
Location: SW 24TH ST / W OF SW 69TH AV

Standard Deviation:	9.1 MPH	Ten Mile Pace:	25 to 34 MPH	85th Percentile:	37.1 MPH
Mean Speed:	28.1 MPH	Percent in Ten Mile Pace:	44.7%	15th Percentile:	18.1 MPH
Median Speed:	29.2 MPH			90th Percentile:	39.3 MPH
Modal Speed:	33.0 MPH			95th Percentile:	41.6 MPH

Daily Eastbound Speeds (MPH)

Study Date: Tuesday, 09/18/2018
Unit ID: 0148
Location: SW 22ND ST / W OF SW 69TH AV

	0-5	5-10	10-15	15-20	20-25	25-30	30-35	35-40	40-45	45-50	50-55	55-60	60-65	65-70	70-75	Total
00:00 - 00:14	0	0	0	0	0	1	0	0	0	0	0	0	0	0	0	**1**
00:15 - 00:29	0	0	0	0	0	0	0	0	0	0	0	0	0	0	0	**0**
00:30 - 00:44	0	0	0	2	1	0	0	0	0	0	0	0	0	0	0	**3**
00:45 - 00:59	0	0	0	1	0	0	0	0	0	0	0	0	0	0	0	**1**
01:00 - 01:14	0	0	0	0	1	0	0	0	0	0	0	0	0	0	0	**1**
01:15 - 01:29	0	0	0	0	0	0	0	0	0	0	0	0	0	0	0	**0**
01:30 - 01:44	0	0	0	0	0	0	0	0	0	0	0	0	0	0	0	**0**
01:45 - 01:59	0	0	0	0	1	1	0	0	0	0	0	0	0	0	0	**2**
02:00 - 02:14	0	0	0	2	1	0	0	0	0	0	0	0	0	0	0	**3**
02:15 - 02:29	0	0	0	0	0	0	0	0	0	0	0	0	0	0	0	**0**
02:30 - 02:44	0	0	0	0	0	0	0	0	0	0	0	0	0	0	0	**0**
02:45 - 02:59	0	0	0	0	1	0	0	0	0	0	0	0	0	0	0	**1**
03:00 - 03:14	0	0	0	0	0	0	0	0	0	0	0	0	0	0	0	**0**
03:15 - 03:29	0	0	0	0	0	0	0	0	0	0	0	0	0	0	0	**0**
03:30 - 03:44	0	0	0	1	0	0	0	0	0	0	0	0	0	0	0	**1**
03:45 - 03:59	0	0	0	0	3	0	0	0	0	0	0	0	0	0	0	**3**
04:00 - 04:14	0	0	0	0	0	1	0	0	0	0	0	0	0	0	0	**1**
04:15 - 04:29	0	0	1	0	0	0	0	0	0	0	0	0	0	0	0	**1**
04:30 - 04:44	0	0	0	0	1	0	0	0	0	0	0	0	0	0	0	**1**
04:45 - 04:59	0	0	0	0	1	0	0	0	0	0	0	0	0	0	0	**1**
05:00 - 05:14	0	0	0	1	1	1	0	0	0	0	0	0	0	0	0	**3**
05:15 - 05:29	0	0	0	0	0	0	0	0	0	0	0	0	0	0	0	**0**
05:30 - 05:44	0	0	0	2	2	0	0	0	0	0	0	0	0	0	0	**4**
05:45 - 05:59	0	1	0	0	2	1	0	0	0	0	0	0	0	0	0	**4**
06:00 - 06:14	0	1	0	3	5	0	0	0	0	0	0	0	0	0	0	**9**
06:15 - 06:29	0	0	1	2	2	1	0	0	0	0	0	0	0	0	0	**6**
06:30 - 06:44	0	0	1	2	2	0	0	0	0	0	0	0	0	0	0	**5**
06:45 - 06:59	0	1	1	2	7	2	0	0	0	0	0	0	0	0	0	**13**
07:00 - 07:14	0	0	1	6	7	2	0	0	0	0	0	0	0	0	0	**16**
07:15 - 07:29	0	1	1	6	6	3	0	0	0	0	0	0	0	0	0	**17**
07:30 - 07:44	0	0	0	3	16	2	0	0	0	0	0	0	0	0	0	**21**
07:45 - 07:59	0	0	1	8	14	5	0	0	0	0	0	0	0	0	0	**28**
08:00 - 08:14	0	1	1	13	25	9	0	0	0	0	0	0	0	0	0	**49**
08:15 - 08:29	0	0	2	16	36	5	0	0	0	0	0	0	0	0	0	**59**
08:30 - 08:44	0	0	2	7	22	3	0	0	0	0	0	0	0	0	0	**34**
08:45 - 08:59	0	0	0	2	15	7	0	0	0	0	0	0	0	0	0	**24**
09:00 - 09:14	0	0	0	0	9	3	0	0	0	0	0	0	0	0	0	**12**
09:15 - 09:29	1	0	0	4	5	1	0	0	0	0	0	0	0	0	0	**11**
09:30 - 09:44	0	0	1	1	8	4	0	0	0	0	0	0	0	0	0	**14**
09:45 - 09:59	0	0	0	0	3	4	1	0	0	0	0	0	0	0	0	**8**
10:00 - 10:14	0	0	1	0	6	1	0	0	0	0	0	0	0	0	0	**8**
10:15 - 10:29	0	0	0	4	6	2	0	0	0	0	0	0	0	0	0	**12**
10:30 - 10:44	0	0	0	1	9	5	1	0	0	0	0	0	0	0	0	**16**
10:45 - 10:59	0	0	1	4	6	1	1	0	0	0	0	0	0	0	0	**13**
11:00 - 11:14	0	1	1	2	8	1	0	0	0	0	0	0	0	0	0	**13**
11:15 - 11:29	0	0	0	5	9	0	0	0	0	0	0	0	0	0	0	**14**
11:30 - 11:44	1	2	3	8	9	0	0	0	0	0	0	0	0	0	0	**23**
11:45 - 11:59	0	0	1	2	8	2	0	0	0	0	0	0	0	0	0	**13**
12:00 - 12:14	0	0	3	3	2	2	1	0	0	0	0	0	0	0	0	**11**
12:15 - 12:29	0	0	2	7	7	3	0	0	0	0	0	0	0	0	0	**19**
12:30 - 12:44	0	0	3	2	11	5	0	0	0	0	0	0	0	0	0	**21**

Daily Eastbound Speeds (MPH)

Study Date: Tuesday, 09/18/2018
Unit ID: 0148
Location: SW 22ND ST / W OF SW 69TH AV

	0-5	5-10	10-15	15-20	20-25	25-30	30-35	35-40	40-45	45-50	50-55	55-60	60-65	65-70	70-75	Total
12:45 - 12:59	0	0	0	6	7	2	2	0	0	0	0	0	0	0	0	**17**
13:00 - 13:14	0	1	1	4	12	10	1	0	0	0	0	0	0	0	0	**29**
13:15 - 13:29	0	0	2	4	4	5	2	0	0	0	0	0	0	0	0	**17**
13:30 - 13:44	0	0	1	8	16	6	1	1	0	0	0	0	0	0	0	**33**
13:45 - 13:59	0	1	0	11	19	6	0	0	0	0	0	0	0	0	0	**37**
14:00 - 14:14	0	1	2	5	20	2	0	0	0	0	0	0	0	0	0	**30**
14:15 - 14:29	0	0	1	4	8	8	1	2	0	0	0	0	0	0	0	**24**
14:30 - 14:44	0	0	2	5	16	7	1	0	0	0	0	0	0	0	0	**31**
14:45 - 14:59	0	0	2	10	16	8	1	0	0	0	0	0	0	0	0	**37**
15:00 - 15:14	0	2	2	8	28	8	1	0	0	0	0	0	0	0	0	**49**
15:15 - 15:29	0	1	1	12	22	5	3	0	0	0	0	0	0	0	0	**44**
15:30 - 15:44	0	0	6	15	28	10	2	0	0	0	0	0	0	0	0	**61**
15:45 - 15:59	0	3	2	8	20	9	1	2	0	0	0	0	0	0	0	**45**
16:00 - 16:14	0	1	2	8	17	5	0	0	0	1	0	0	0	0	0	**34**
16:15 - 16:29	0	0	0	10	32	13	0	2	0	0	0	0	0	0	0	**57**
16:30 - 16:44	0	3	2	8	27	6	2	0	0	0	0	0	0	0	0	**48**
16:45 - 16:59	0	0	2	7	41	20	1	0	0	0	0	0	0	0	0	**71**
17:00 - 17:14	0	0	1	7	35	21	1	1	0	0	0	0	0	0	0	**66**
17:15 - 17:29	0	0	2	15	34	16	2	0	0	0	0	0	0	0	0	**69**
17:30 - 17:44	0	1	4	13	36	9	1	0	0	0	0	0	0	0	0	**64**
17:45 - 17:59	0	1	3	13	33	10	0	0	0	0	0	0	0	0	0	**60**
18:00 - 18:14	0	1	1	14	29	7	0	1	0	0	0	0	0	0	0	**53**
18:15 - 18:29	0	0	1	9	23	9	0	0	0	0	0	0	0	0	0	**42**
18:30 - 18:44	0	1	6	5	24	9	0	1	0	0	0	0	0	0	0	**46**
18:45 - 18:59	0	0	2	8	15	6	0	0	0	0	0	0	0	0	0	**31**
19:00 - 19:14	0	0	3	7	17	5	0	0	0	0	0	0	0	0	0	**32**
19:15 - 19:29	1	1	3	9	11	5	1	0	0	0	0	0	0	0	0	**31**
19:30 - 19:44	0	0	0	4	19	2	0	0	0	0	0	0	0	0	0	**25**
19:45 - 19:59	0	0	3	7	12	2	1	0	0	0	0	0	0	0	0	**25**
20:00 - 20:14	0	1	1	9	11	1	1	0	0	0	0	0	0	0	0	**24**
20:15 - 20:29	0	0	0	5	7	1	1	0	0	0	0	0	0	0	0	**14**
20:30 - 20:44	0	0	2	2	4	4	0	0	0	0	0	0	0	0	0	**12**
20:45 - 20:59	0	0	0	0	6	0	0	0	0	0	0	0	0	0	0	**6**
21:00 - 21:14	0	0	0	3	6	3	0	0	0	0	0	0	0	0	0	**12**
21:15 - 21:29	0	0	0	3	5	0	1	1	0	0	0	0	0	0	0	**10**
21:30 - 21:44	0	0	0	1	7	2	0	0	0	0	0	0	0	0	0	**10**
21:45 - 21:59	0	0	0	2	6	1	0	0	0	0	0	0	0	0	0	**9**
22:00 - 22:14	0	0	1	5	7	0	0	0	0	0	0	0	0	0	0	**13**
22:15 - 22:29	0	0	1	1	2	2	0	0	0	0	0	0	0	0	0	**6**
22:30 - 22:44	0	0	0	3	1	1	1	0	0	0	0	0	0	0	0	**6**
22:45 - 22:59	0	0	0	2	3	2	0	1	0	0	0	0	0	0	0	**8**
23:00 - 23:14	0	0	0	1	3	2	0	0	0	0	0	0	0	0	0	**6**
23:15 - 23:29	0	0	0	1	3	1	1	0	0	0	0	0	0	0	0	**6**
23:30 - 23:44	0	0	0	0	2	0	0	0	0	0	0	0	0	0	0	**2**
23:45 - 23:59	0	0	0	0	1	0	0	0	0	0	0	0	0	0	0	**1**
Totals	**3**	**27**	**90**	**404**	**973**	**329**	**34**	**12**	**0**	**1**	**0**	**0**	**0**	**0**	**0**	**1873**
Percent of Total	**0.2**	**1.4**	**4.8**	**21.6**	**51.9**	**17.6**	**1.8**	**0.6**	**0.0**	**0.1**	**0.0**	**0.0**	**0.0**	**0.0**	**0.0**	**100**
Percent of AM	**0.4**	**1.7**	**4.3**	**23.5**	**55.0**	**14.5**	**0.6**	**0.0**	**0.0**	**0.0**	**0.0**	**0.0**	**0.0**	**0.0**	**0.0**	**100**
Percent of PM	**0.1**	**1.4**	**5.0**	**20.9**	**50.9**	**18.6**	**2.2**	**0.9**	**0.0**	**0.1**	**0.0**	**0.0**	**0.0**	**0.0**	**0.0**	**100**

Daily Eastbound Speeds (MPH)

Study Date: Tuesday, 09/18/2018
Unit ID: 0148
Location: SW 22ND ST / W OF SW 69TH AV

Standard Deviation:	5.0 MPH	Ten Mile Pace:	15 to 24 MPH	85th Percentile:	26.7 MPH
Mean Speed:	22.4 MPH	Percent in Ten Mile Pace:	73.5%		
Median Speed:	22.5 MPH			15th Percentile:	17.4 MPH
Modal Speed:	23.0 MPH			90th Percentile:	28.4 MPH
				95th Percentile:	30.1 MPH

Daily Eastbound Speeds (MPH)

Study Date: Wednesday, 09/19/2018
Unit ID: 0148
Location: SW 22ND ST / W OF SW 69TH AV

	0-5	5-10	10-15	15-20	20-25	25-30	30-35	35-40	40-45	45-50	50-55	55-60	60-65	65-70	70-75	Total
00:00 - 00:14	0	0	0	0	2	0	0	0	0	0	0	0	0	0	0	**2**
00:15 - 00:29	0	0	0	1	3	0	0	0	0	0	0	0	0	0	0	**4**
00:30 - 00:44	0	0	0	0	1	0	0	0	0	0	0	0	0	0	0	**1**
00:45 - 00:59	0	0	0	0	1	0	0	0	0	0	0	0	0	0	0	**1**
01:00 - 01:14	0	0	0	0	0	0	0	0	0	0	0	0	0	0	0	**0**
01:15 - 01:29	0	0	1	0	1	0	0	0	0	0	0	0	0	0	0	**2**
01:30 - 01:44	0	0	1	0	0	0	0	0	0	0	0	0	0	0	0	**1**
01:45 - 01:59	0	0	0	0	0	1	0	0	0	0	0	0	0	0	0	**1**
02:00 - 02:14	0	0	0	0	0	0	0	0	0	0	0	0	0	0	0	**0**
02:15 - 02:29	0	0	0	0	1	0	0	0	0	0	0	0	0	0	0	**1**
02:30 - 02:44	0	0	0	0	0	0	0	0	0	0	0	0	0	0	0	**0**
02:45 - 02:59	0	0	0	0	0	0	0	0	0	0	0	0	0	0	0	**0**
03:00 - 03:14	0	0	0	0	0	1	0	0	0	0	0	0	0	0	0	**1**
03:15 - 03:29	0	0	0	1	0	0	0	0	0	0	0	0	0	0	0	**1**
03:30 - 03:44	0	0	0	0	0	0	0	0	0	0	0	0	0	0	0	**0**
03:45 - 03:59	0	1	0	1	1	0	0	0	0	0	0	0	0	0	0	**3**
04:00 - 04:14	0	0	0	1	1	0	0	0	0	0	0	0	0	0	0	**2**
04:15 - 04:29	0	0	0	0	0	0	0	0	0	0	0	0	0	0	0	**0**
04:30 - 04:44	0	0	1	0	0	0	0	0	0	0	0	0	0	0	0	**1**
04:45 - 04:59	0	0	0	0	0	1	0	0	0	0	0	0	0	0	0	**1**
05:00 - 05:14	0	0	0	0	0	0	0	0	0	0	0	0	0	0	0	**0**
05:15 - 05:29	0	0	0	0	1	1	0	0	0	0	0	0	0	0	0	**2**
05:30 - 05:44	0	0	0	2	0	1	0	0	0	0	0	0	0	0	0	**3**
05:45 - 05:59	0	0	2	1	0	1	0	0	1	0	0	0	0	0	0	**5**
06:00 - 06:14	0	0	0	1	3	0	0	0	0	0	0	0	0	0	0	**4**
06:15 - 06:29	0	0	0	4	1	0	0	0	0	0	0	0	0	0	0	**5**
06:30 - 06:44	0	0	0	1	2	1	1	0	0	0	0	0	0	0	0	**5**
06:45 - 06:59	0	0	0	2	5	1	1	0	0	0	0	0	0	0	0	**9**
07:00 - 07:14	0	0	0	5	6	0	0	0	0	0	0	0	0	0	0	**11**
07:15 - 07:29	0	1	1	3	7	6	1	0	0	0	0	0	0	0	0	**19**
07:30 - 07:44	0	0	0	5	6	4	1	0	0	0	0	0	0	0	0	**16**
07:45 - 07:59	0	0	4	2	3	1	0	0	0	0	0	0	0	0	0	**10**
08:00 - 08:14	0	1	2	6	4	2	1	0	0	0	0	0	0	0	0	**16**
08:15 - 08:29	0	0	0	5	7	7	0	0	0	0	0	0	0	0	0	**19**
08:30 - 08:44	0	0	0	4	11	3	0	0	0	1	0	0	0	0	0	**19**
08:45 - 08:59	1	1	4	6	3	1	0	0	0	0	0	0	0	0	0	**16**
09:00 - 09:14	1	1	2	2	1	1	0	0	0	0	0	0	0	0	0	**8**
09:15 - 09:29	0	3	2	5	4	3	0	0	0	0	0	0	0	0	0	**17**
09:30 - 09:44	0	0	3	5	6	0	0	0	0	0	0	0	0	0	0	**14**
09:45 - 09:59	0	1	6	3	7	1	0	0	0	0	0	0	0	0	0	**18**
10:00 - 10:14	0	0	3	7	4	3	0	0	0	0	0	0	0	0	0	**17**
10:15 - 10:29	0	2	4	5	8	0	0	0	0	0	0	0	0	0	0	**19**
10:30 - 10:44	0	0	1	1	6	3	0	1	0	0	0	0	0	0	0	**12**
10:45 - 10:59	0	0	0	2	2	1	0	0	0	0	0	0	0	0	0	**5**
11:00 - 11:14	0	1	1	7	10	1	0	0	0	0	0	0	0	0	0	**20**
11:15 - 11:29	1	3	4	9	8	0	0	0	0	0	0	0	0	0	0	**25**
11:30 - 11:44	0	2	2	6	7	1	0	0	0	0	0	0	0	0	0	**18**
11:45 - 11:59	0	1	7	8	3	0	1	0	0	0	0	0	0	0	0	**20**
12:00 - 12:14	0	1	5	2	8	2	0	0	0	0	0	0	0	0	0	**18**
12:15 - 12:29	0	1	1	9	4	2	0	0	0	0	0	0	0	0	0	**17**
12:30 - 12:44	0	2	2	7	4	2	0	0	0	0	0	0	0	0	0	**17**

Daily Eastbound Speeds (MPH)

Study Date: Wednesday, 09/19/2018
Unit ID: 0148
Location: SW 22ND ST / W OF SW 69TH AV

	0-5	5-10	10-15	15-20	20-25	25-30	30-35	35-40	40-45	45-50	50-55	55-60	60-65	65-70	70-75	Total
12:45 - 12:59	0	0	5	5	3	2	0	0	0	0	0	0	0	0	0	**15**
13:00 - 13:14	0	3	0	12	7	1	0	0	0	0	0	0	0	0	0	**23**
13:15 - 13:29	0	0	3	6	4	1	0	0	0	0	0	0	0	0	0	**14**
13:30 - 13:44	0	0	2	6	12	3	0	0	0	0	0	0	0	0	0	**23**
13:45 - 13:59	0	1	1	8	10	5	1	0	0	0	0	0	0	0	0	**26**
14:00 - 14:14	0	0	0	4	10	8	0	0	0	0	0	0	0	0	0	**22**
14:15 - 14:29	0	0	5	1	8	3	1	0	0	0	0	0	0	0	0	**18**
14:30 - 14:44	0	0	1	1	10	5	0	0	0	0	0	0	1	0	0	**18**
14:45 - 14:59	0	0	1	8	13	6	2	0	0	0	0	0	0	0	0	**30**
15:00 - 15:14	0	0	1	1	16	3	2	0	0	0	0	0	0	0	0	**23**
15:15 - 15:29	0	0	0	3	17	7	1	0	0	0	0	0	0	0	0	**28**
15:30 - 15:44	0	0	1	4	10	9	3	0	0	0	0	0	0	0	0	**27**
15:45 - 15:59	0	0	1	8	19	7	1	0	0	0	0	0	0	0	0	**36**
16:00 - 16:14	0	0	1	10	10	7	2	0	0	0	0	0	0	0	0	**30**
16:15 - 16:29	0	6	8	8	16	7	2	0	0	0	0	0	0	0	0	**47**
16:30 - 16:44	0	5	1	6	18	0	1	0	0	0	0	0	0	0	0	**31**
16:45 - 16:59	0	0	0	2	16	13	4	0	0	0	0	0	0	0	0	**35**
17:00 - 17:14	0	0	0	3	24	10	1	0	0	0	0	0	0	0	0	**38**
17:15 - 17:29	1	0	1	13	17	9	2	0	0	0	0	0	0	0	0	**43**
17:30 - 17:44	0	0	1	3	26	15	0	0	0	0	0	0	0	0	0	**45**
17:45 - 17:59	0	1	0	12	28	11	3	1	0	0	0	0	0	0	0	**56**
18:00 - 18:14	0	1	0	5	20	12	3	0	1	0	0	0	0	0	0	**42**
18:15 - 18:29	0	0	0	8	21	4	0	0	0	0	0	0	0	0	0	**33**
18:30 - 18:44	0	0	1	5	27	5	0	1	0	0	0	0	0	0	0	**39**
18:45 - 18:59	0	0	0	2	18	8	2	0	0	0	0	0	0	0	0	**30**
19:00 - 19:14	0	0	0	4	6	7	2	0	0	0	0	0	0	0	0	**19**
19:15 - 19:29	0	1	1	13	9	4	1	0	0	0	0	0	0	0	0	**29**
19:30 - 19:44	0	1	3	6	13	2	1	0	0	0	0	0	0	0	0	**26**
19:45 - 19:59	0	0	1	6	8	3	0	0	0	0	0	0	0	0	0	**18**
20:00 - 20:14	0	1	0	6	3	5	1	0	0	0	0	0	0	0	0	**16**
20:15 - 20:29	0	0	1	1	10	3	0	0	0	0	0	0	0	0	0	**15**
20:30 - 20:44	1	0	3	3	8	1	1	0	0	0	0	0	0	0	0	**17**
20:45 - 20:59	0	0	3	1	3	3	0	0	0	0	0	0	0	0	0	**10**
21:00 - 21:14	0	0	0	7	3	1	0	0	0	0	0	0	0	0	0	**11**
21:15 - 21:29	0	0	0	7	2	0	1	0	0	0	0	0	0	0	0	**10**
21:30 - 21:44	0	0	0	6	2	0	0	0	0	0	0	0	0	0	0	**8**
21:45 - 21:59	0	0	2	2	4	5	0	0	0	0	0	0	0	0	0	**13**
22:00 - 22:14	0	1	0	3	2	2	0	0	0	0	0	0	0	0	0	**8**
22:15 - 22:29	0	0	1	1	4	0	0	0	0	0	0	0	0	0	0	**6**
22:30 - 22:44	0	0	1	1	1	0	0	1	0	0	0	0	0	0	0	**4**
22:45 - 22:59	0	0	1	0	3	2	0	0	0	0	0	0	0	0	0	**6**
23:00 - 23:14	0	0	1	1	2	1	1	0	0	0	0	0	0	0	0	**6**
23:15 - 23:29	0	0	0	1	1	1	0	0	0	0	0	0	0	0	0	**3**
23:30 - 23:44	0	0	0	0	1	1	0	0	0	0	0	0	0	0	0	**2**
23:45 - 23:59	0	0	0	2	1	1	0	0	0	0	0	0	0	0	0	**4**
Totals	**5**	**43**	**111**	**344**	**618**	**255**	**45**	**4**	**2**	**1**	**0**	**0**	**1**	**0**	**0**	**1429**
Percent of Total	**0.3**	**3.0**	**7.8**	**24.1**	**43.2**	**17.8**	**3.1**	**0.3**	**0.1**	**0.1**	**0.0**	**0.0**	**0.1**	**0.0**	**0.0**	**100**
Percent of AM	**0.8**	**4.8**	**13.6**	**29.7**	**36.4**	**12.3**	**1.6**	**0.3**	**0.3**	**0.3**	**0.0**	**0.0**	**0.0**	**0.0**	**0.0**	**100**
Percent of PM	**0.2**	**2.4**	**5.7**	**22.1**	**45.7**	**19.8**	**3.7**	**0.3**	**0.1**	**0.0**	**0.0**	**0.0**	**0.1**	**0.0**	**0.0**	**100**

Daily Eastbound Speeds (MPH)

Study Date: Wednesday, 09/19/2018
Unit ID: 0148
Location: SW 22ND ST / W OF SW 69TH AV

Standard Deviation:	5.8 MPH	Ten Mile Pace:	15 to 24 MPH	85th Percentile:	27.2 MPH
Mean Speed:	21.8 MPH	Percent in Ten Mile Pace:	67.3%		
Median Speed:	22.0 MPH			15th Percentile:	16.0 MPH
Modal Speed:	23.0 MPH			90th Percentile:	28.9 MPH
				95th Percentile:	30.6 MPH

Daily Eastbound Speeds (MPH)

Study Date: Thursday, 09/20/2018
Unit ID: 0148
Location: SW 22ND ST / W OF SW 69TH AV

	0-5	5-10	10-15	15-20	20-25	25-30	30-35	35-40	40-45	45-50	50-55	55-60	60-65	65-70	70-75	Total
00:00 - 00:14	0	1	0	0	1	0	0	0	0	0	0	0	0	0	0	**2**
00:15 - 00:29	0	0	0	0	0	0	1	0	0	0	0	0	0	0	0	**1**
00:30 - 00:44	0	0	1	0	0	0	0	0	0	0	0	0	0	0	0	**1**
00:45 - 00:59	0	0	0	1	0	0	0	0	0	0	0	0	0	0	0	**1**
01:00 - 01:14	0	0	0	0	2	0	0	0	0	0	0	0	0	0	0	**2**
01:15 - 01:29	0	0	0	0	0	0	0	0	0	0	0	0	0	0	0	**0**
01:30 - 01:44	0	0	0	1	0	0	0	0	0	0	0	0	0	0	0	**1**
01:45 - 01:59	0	0	0	0	3	0	0	0	0	0	0	0	0	0	0	**3**
02:00 - 02:14	0	0	0	0	1	0	0	0	0	0	0	0	0	0	0	**1**
02:15 - 02:29	0	0	0	0	0	0	0	0	0	0	0	0	0	0	0	**0**
02:30 - 02:44	0	0	0	0	1	0	0	0	0	0	0	0	0	0	0	**1**
02:45 - 02:59	0	0	0	1	0	1	0	0	0	0	0	0	0	0	0	**2**
03:00 - 03:14	0	0	0	0	0	0	0	0	0	0	0	0	0	0	0	**0**
03:15 - 03:29	0	0	0	1	1	0	0	0	0	0	0	0	0	0	0	**2**
03:30 - 03:44	0	0	0	0	0	1	0	0	0	0	0	0	0	0	0	**1**
03:45 - 03:59	0	0	0	0	0	0	0	0	0	0	0	0	0	0	0	**0**
04:00 - 04:14	0	0	0	0	0	0	0	0	0	0	0	0	0	0	0	**0**
04:15 - 04:29	0	0	0	0	2	0	0	0	0	0	0	0	0	0	0	**2**
04:30 - 04:44	0	0	0	0	1	0	0	0	0	0	0	0	0	0	0	**1**
04:45 - 04:59	0	0	1	0	0	0	0	0	0	0	0	0	0	0	0	**1**
05:00 - 05:14	0	0	0	1	1	0	0	0	0	0	0	0	0	0	0	**2**
05:15 - 05:29	0	0	0	0	1	0	0	0	0	0	0	0	0	0	0	**1**
05:30 - 05:44	0	0	0	1	3	0	0	0	0	0	0	0	0	0	0	**4**
05:45 - 05:59	0	0	0	0	4	1	0	0	0	0	0	0	0	0	0	**5**
06:00 - 06:14	0	0	1	3	3	2	0	0	0	0	0	0	0	0	0	**9**
06:15 - 06:29	0	0	2	0	0	0	1	0	0	0	0	0	0	0	0	**3**
06:30 - 06:44	0	0	0	3	0	1	0	0	0	0	0	0	0	0	0	**4**
06:45 - 06:59	0	0	2	5	2	2	1	0	0	0	0	0	0	0	0	**12**
07:00 - 07:14	0	0	0	7	13	0	0	1	0	0	0	0	0	0	0	**21**
07:15 - 07:29	0	1	0	2	16	3	0	0	0	0	0	0	0	0	0	**22**
07:30 - 07:44	0	5	5	5	3	2	1	0	0	0	0	0	0	0	0	**21**
07:45 - 07:59	0	8	8	10	2	0	0	0	0	0	0	0	0	0	0	**28**
08:00 - 08:14	2	6	13	10	2	0	0	0	0	0	0	0	0	0	0	**33**
08:15 - 08:29	0	0	5	14	25	9	1	1	0	0	0	0	0	0	0	**55**
08:30 - 08:44	0	0	0	3	16	6	0	0	0	0	0	0	0	0	0	**25**
08:45 - 08:59	0	1	0	9	12	5	2	0	0	0	0	0	0	0	0	**29**
09:00 - 09:14	0	0	0	2	6	6	0	0	0	0	0	0	0	0	0	**14**
09:15 - 09:29	0	0	0	1	5	3	0	0	0	0	0	0	0	0	0	**9**
09:30 - 09:44	0	0	1	4	4	1	0	0	0	0	0	0	0	0	0	**10**
09:45 - 09:59	0	0	0	2	5	2	0	0	0	0	0	0	0	0	0	**9**
10:00 - 10:14	0	1	0	1	8	3	0	0	0	0	0	0	0	0	0	**13**
10:15 - 10:29	0	0	0	4	9	4	0	0	0	0	0	0	0	0	0	**17**
10:30 - 10:44	0	0	0	3	4	2	0	0	0	0	0	0	0	0	0	**9**
10:45 - 10:59	0	0	0	4	8	4	0	0	0	0	0	0	0	0	0	**16**
11:00 - 11:14	0	0	0	6	3	2	0	0	0	0	0	0	0	0	0	**11**
11:15 - 11:29	0	0	2	3	10	4	0	0	0	0	0	0	0	0	0	**19**
11:30 - 11:44	0	0	1	1	5	1	1	0	0	0	0	0	0	0	0	**9**
11:45 - 11:59	0	1	1	3	11	1	0	0	0	0	0	0	0	0	0	**17**
12:00 - 12:14	0	0	2	3	7	7	2	0	0	0	0	0	0	0	0	**21**
12:15 - 12:29	1	0	2	5	9	1	0	0	0	0	0	0	0	0	0	**18**
12:30 - 12:44	0	0	1	2	5	2	0	0	0	0	0	0	0	0	0	**10**

Daily Eastbound Speeds (MPH)

Study Date: Thursday, 09/20/2018
Unit ID: 0148
Location: SW 22ND ST / W OF SW 69TH AV

	0-5	5-10	10-15	15-20	20-25	25-30	30-35	35-40	40-45	45-50	50-55	55-60	60-65	65-70	70-75	Total
12:45 - 12:59	0	0	1	0	12	4	2	0	0	0	0	0	0	0	0	**19**
13:00 - 13:14	0	0	0	10	7	3	1	0	0	0	0	0	0	0	0	**21**
13:15 - 13:29	0	0	1	2	8	8	1	0	0	0	0	0	0	0	0	**20**
13:30 - 13:44	0	0	1	4	5	2	0	0	0	0	0	0	0	0	0	**12**
13:45 - 13:59	0	0	2	13	18	3	0	0	0	0	0	0	0	0	0	**36**
14:00 - 14:14	0	0	1	10	11	3	0	0	0	0	0	0	0	0	0	**25**
14:15 - 14:29	0	0	3	6	7	10	1	0	0	0	0	0	0	0	0	**27**
14:30 - 14:44	0	2	3	2	10	5	0	0	0	0	0	0	0	0	0	**22**
14:45 - 14:59	0	0	1	7	21	10	3	0	0	0	0	0	0	0	0	**42**
15:00 - 15:14	0	0	2	17	34	12	2	1	0	0	0	0	0	0	0	**68**
15:15 - 15:29	0	0	2	22	27	17	3	0	0	0	0	0	0	0	0	**71**
15:30 - 15:44	0	0	3	13	20	13	1	0	0	0	0	0	0	0	0	**50**
15:45 - 15:59	0	1	6	9	23	9	1	0	0	0	0	0	0	0	0	**49**
16:00 - 16:14	0	0	0	9	25	11	0	1	0	0	0	0	0	0	0	**46**
16:15 - 16:29	0	0	0	7	31	20	4	0	0	0	0	0	0	0	0	**62**
16:30 - 16:44	0	0	0	16	29	9	2	0	0	0	0	0	0	0	0	**56**
16:45 - 16:59	0	0	3	8	17	22	1	1	0	0	0	0	0	0	0	**52**
17:00 - 17:14	0	0	1	9	20	23	3	0	0	0	0	0	0	0	0	**56**
17:15 - 17:29	0	0	0	11	30	20	3	0	0	0	0	0	0	0	0	**64**
17:30 - 17:44	0	0	2	7	26	12	3	0	0	0	0	0	0	0	0	**50**
17:45 - 17:59	0	0	2	7	21	16	2	0	0	0	0	0	0	0	0	**48**
18:00 - 18:14	0	0	1	12	23	10	3	1	0	0	0	0	0	0	0	**50**
18:15 - 18:29	0	0	3	9	15	13	2	0	0	0	0	0	0	0	0	**42**
18:30 - 18:44	0	0	0	9	26	8	0	0	0	0	0	0	0	0	0	**43**
18:45 - 18:59	0	0	1	7	13	7	0	0	0	0	0	0	0	0	0	**28**
19:00 - 19:14	0	0	2	7	4	5	1	0	0	0	0	0	0	0	0	**19**
19:15 - 19:29	0	0	1	4	9	5	1	0	0	0	0	0	0	0	0	**20**
19:30 - 19:44	0	0	2	5	12	4	1	0	0	1	0	0	0	0	0	**25**
19:45 - 19:59	0	0	1	3	6	5	2	0	0	0	0	0	0	0	0	**17**
20:00 - 20:14	0	0	1	3	7	2	0	0	1	0	0	0	0	0	0	**14**
20:15 - 20:29	0	1	0	4	5	1	0	1	0	0	0	0	0	0	0	**12**
20:30 - 20:44	0	0	0	6	9	5	2	1	0	0	0	0	0	0	0	**23**
20:45 - 20:59	0	0	2	2	5	4	0	0	0	0	0	0	0	0	0	**13**
21:00 - 21:14	0	0	2	1	6	1	1	0	0	0	0	0	0	0	0	**11**
21:15 - 21:29	0	0	1	7	3	2	0	1	0	0	0	0	0	0	0	**14**
21:30 - 21:44	0	0	0	7	3	1	0	0	0	0	0	0	0	0	0	**11**
21:45 - 21:59	0	0	0	4	1	1	0	0	0	0	0	0	0	0	0	**6**
22:00 - 22:14	0	0	3	1	2	3	0	0	0	0	0	0	0	0	0	**9**
22:15 - 22:29	0	0	0	1	2	1	0	0	0	0	0	0	0	0	0	**4**
22:30 - 22:44	0	0	0	1	1	1	0	0	0	0	0	0	0	0	0	**3**
22:45 - 22:59	0	0	0	1	1	1	0	0	0	0	0	0	0	0	0	**3**
23:00 - 23:14	0	0	0	2	1	0	0	0	0	0	0	0	0	0	0	**3**
23:15 - 23:29	0	0	0	1	5	1	0	0	1	1	0	0	0	0	0	**9**
23:30 - 23:44	0	0	0	1	0	1	0	0	0	0	0	0	0	0	0	**2**
23:45 - 23:59	0	0	0	0	2	0	0	0	0	0	0	0	0	0	0	**2**
Totals	**3**	**28**	**102**	**408**	**777**	**390**	**56**	**9**	**2**	**2**	**0**	**0**	**0**	**0**	**0**	**1777**
Percent of Total	**0.2**	**1.6**	**5.7**	**23.0**	**43.7**	**21.9**	**3.2**	**0.5**	**0.1**	**0.1**	**0.0**	**0.0**	**0.0**	**0.0**	**0.0**	**100**
Percent of AM	**0.4**	**5.3**	**9.6**	**24.7**	**43.0**	**14.7**	**1.8**	**0.4**	**0.0**	**0.0**	**0.0**	**0.0**	**0.0**	**0.0**	**0.0**	**100**
Percent of PM	**0.1**	**0.3**	**4.4**	**22.4**	**44.0**	**24.4**	**3.6**	**0.5**	**0.2**	**0.2**	**0.0**	**0.0**	**0.0**	**0.0**	**0.0**	**100**

Daily Eastbound Speeds (MPH)

Study Date: Thursday, 09/20/2018
Unit ID: 0148
Location: SW 22ND ST / W OF SW 69TH AV

Standard Deviation:	5.4 MPH	Ten Mile Pace:	15 to 24 MPH	85th Percentile:	28.0 MPH
Mean Speed:	22.5 MPH	Percent in Ten Mile Pace:	66.7%	15th Percentile:	17.0 MPH
Median Speed:	22.7 MPH			90th Percentile:	29.3 MPH
Modal Speed:	23.0 MPH			95th Percentile:	30.7 MPH

Daily Westbound Speeds (MPH)

Study Date: Tuesday, 09/18/2018
Unit ID: 0162
Location: SW 22ND ST / W OF SW 69TH AV

	0-5	5-10	10-15	15-20	20-25	25-30	30-35	35-40	40-45	45-50	50-55	55-60	60-65	65-70	70-75	Total
00:00 - 00:14	0	0	0	0	0	0	0	0	0	0	0	0	0	0	0	**0**
00:15 - 00:29	0	0	0	0	1	0	0	0	0	0	0	0	0	0	0	**1**
00:30 - 00:44	0	0	0	0	0	0	3	0	0	0	0	0	0	0	0	**3**
00:45 - 00:59	0	0	0	0	0	0	0	0	0	0	0	0	0	0	0	**0**
01:00 - 01:14	0	0	0	0	0	0	0	0	0	0	0	0	0	0	0	**0**
01:15 - 01:29	0	0	0	0	0	0	0	0	0	0	0	0	0	0	0	**0**
01:30 - 01:44	0	0	0	0	0	0	0	0	0	0	0	0	0	0	0	**0**
01:45 - 01:59	0	0	0	1	0	0	0	0	0	0	0	0	0	0	0	**1**
02:00 - 02:14	0	0	0	0	0	0	0	0	0	0	0	0	0	0	0	**0**
02:15 - 02:29	0	1	0	0	0	0	0	0	0	0	0	0	0	0	0	**1**
02:30 - 02:44	0	0	0	0	0	0	0	0	0	0	0	0	0	0	0	**0**
02:45 - 02:59	0	0	0	0	1	0	0	0	0	0	0	0	0	0	0	**1**
03:00 - 03:14	0	0	0	0	0	0	0	0	0	0	0	0	0	0	0	**0**
03:15 - 03:29	0	0	0	0	0	0	0	0	0	1	0	0	0	0	0	**1**
03:30 - 03:44	0	0	0	0	0	1	0	1	0	0	0	0	0	0	0	**2**
03:45 - 03:59	0	0	0	0	1	0	0	0	0	0	0	0	0	0	0	**1**
04:00 - 04:14	0	0	0	0	0	0	0	0	0	0	0	0	0	0	0	**0**
04:15 - 04:29	0	0	0	1	2	1	1	0	0	0	0	0	0	0	0	**5**
04:30 - 04:44	0	0	1	0	1	0	0	0	0	0	0	0	0	0	0	**2**
04:45 - 04:59	0	0	0	0	0	1	0	0	0	0	0	0	0	0	0	**1**
05:00 - 05:14	0	0	0	0	0	0	0	0	0	0	0	0	0	0	0	**0**
05:15 - 05:29	0	0	0	0	0	2	1	2	0	0	0	0	0	0	0	**5**
05:30 - 05:44	0	0	0	2	0	1	0	0	0	0	0	0	0	0	0	**3**
05:45 - 05:59	0	1	0	2	1	0	1	0	0	0	0	0	0	0	0	**5**
06:00 - 06:14	0	0	1	4	1	1	0	0	0	0	0	0	0	0	0	**7**
06:15 - 06:29	0	0	0	1	3	0	3	0	0	0	0	0	0	0	0	**7**
06:30 - 06:44	0	0	2	1	2	1	1	0	0	0	0	0	0	0	0	**7**
06:45 - 06:59	0	0	1	1	1	1	0	0	0	0	0	0	0	0	0	**4**
07:00 - 07:14	0	0	2	4	2	2	1	0	0	0	0	0	0	0	0	**11**
07:15 - 07:29	0	0	1	5	6	0	2	1	0	0	0	0	0	0	0	**15**
07:30 - 07:44	0	1	0	4	2	5	4	0	0	0	0	0	0	0	0	**16**
07:45 - 07:59	0	1	1	5	13	7	5	1	0	0	0	0	0	0	0	**33**
08:00 - 08:14	0	0	1	12	15	4	8	1	0	0	0	0	0	0	0	**41**
08:15 - 08:29	1	0	4	6	5	4	1	2	0	0	0	0	0	0	0	**23**
08:30 - 08:44	0	0	0	4	8	6	2	0	0	0	0	0	0	0	0	**20**
08:45 - 08:59	0	0	0	2	1	2	4	1	0	0	0	0	0	0	0	**10**
09:00 - 09:14	0	0	0	5	5	1	5	0	0	0	0	0	0	0	0	**16**
09:15 - 09:29	0	0	1	3	3	2	3	1	0	0	0	0	0	0	0	**13**
09:30 - 09:44	0	1	1	1	2	0	0	0	0	0	0	0	0	0	0	**5**
09:45 - 09:59	0	0	2	3	3	2	1	1	0	0	0	0	0	0	0	**12**
10:00 - 10:14	0	0	0	0	3	3	3	0	0	0	0	0	0	0	0	**9**
10:15 - 10:29	0	0	0	0	1	1	0	0	0	0	0	0	0	0	0	**2**
10:30 - 10:44	0	0	1	2	2	2	1	0	0	0	0	0	0	0	0	**8**
10:45 - 10:59	0	0	0	0	1	1	1	1	0	0	0	0	0	0	0	**4**
11:00 - 11:14	0	0	0	3	3	0	1	0	0	0	0	0	0	0	0	**7**
11:15 - 11:29	0	0	0	2	1	1	2	0	0	1	0	0	0	0	0	**7**
11:30 - 11:44	0	1	4	3	2	0	0	0	0	0	0	0	0	0	0	**10**
11:45 - 11:59	0	0	3	1	4	5	2	0	0	0	0	0	0	0	0	**15**
12:00 - 12:14	0	1	0	4	1	3	0	0	0	0	0	0	0	0	0	**9**
12:15 - 12:29	0	1	2	2	1	3	0	0	0	0	0	0	0	0	0	**9**
12:30 - 12:44	0	0	2	4	2	0	2	0	0	0	0	0	0	0	0	**10**

Daily Westbound Speeds (MPH)

Study Date: Tuesday, 09/18/2018
Unit ID: 0162
Location: SW 22ND ST / W OF SW 69TH AV

	0-5	5-10	10-15	15-20	20-25	25-30	30-35	35-40	40-45	45-50	50-55	55-60	60-65	65-70	70-75	Total
12:45 - 12:59	0	0	0	1	3	2	1	0	0	0	0	0	0	0	0	**7**
13:00 - 13:14	0	0	0	1	0	3	1	0	0	0	0	0	0	0	0	**5**
13:15 - 13:29	0	0	0	6	4	2	2	1	0	0	0	0	0	0	0	**15**
13:30 - 13:44	0	0	0	3	3	0	0	0	0	0	0	0	0	0	0	**6**
13:45 - 13:59	0	0	0	4	3	4	4	1	0	0	0	0	0	0	0	**16**
14:00 - 14:14	0	0	0	2	3	2	0	2	0	0	0	0	0	0	0	**9**
14:15 - 14:29	1	1	0	1	4	1	0	1	0	0	0	0	0	0	0	**9**
14:30 - 14:44	0	0	0	1	7	5	2	0	0	0	0	0	0	0	0	**15**
14:45 - 14:59	0	0	2	3	5	5	2	0	0	0	0	0	0	0	0	**17**
15:00 - 15:14	1	1	1	2	2	4	1	0	0	0	0	0	0	0	0	**12**
15:15 - 15:29	0	0	0	1	3	2	4	0	0	0	0	0	0	0	0	**10**
15:30 - 15:44	0	0	3	1	2	1	1	0	0	0	0	0	0	0	0	**8**
15:45 - 15:59	0	0	0	3	6	5	4	1	0	0	0	0	0	0	0	**19**
16:00 - 16:14	0	0	0	4	4	9	4	0	0	0	0	0	0	0	0	**21**
16:15 - 16:29	0	1	1	1	4	3	0	1	0	0	0	0	0	0	0	**11**
16:30 - 16:44	0	1	0	1	1	2	0	0	0	0	0	0	0	0	0	**5**
16:45 - 16:59	0	0	1	1	3	5	2	0	0	0	0	0	0	0	0	**12**
17:00 - 17:14	0	0	0	2	4	0	1	0	0	0	0	0	0	0	0	**7**
17:15 - 17:29	0	0	1	6	4	1	1	1	0	0	0	0	0	0	0	**14**
17:30 - 17:44	0	1	0	2	4	1	3	1	0	0	0	0	0	0	0	**12**
17:45 - 17:59	0	0	1	0	1	4	1	0	0	0	0	0	0	0	0	**7**
18:00 - 18:14	0	0	0	1	6	0	2	0	0	0	0	0	0	0	0	**9**
18:15 - 18:29	0	0	1	1	8	1	0	0	0	0	0	0	0	0	0	**11**
18:30 - 18:44	0	0	0	1	1	2	0	0	0	0	0	0	0	0	0	**4**
18:45 - 18:59	0	0	2	2	2	0	2	0	0	0	0	0	0	0	0	**8**
19:00 - 19:14	0	0	0	3	5	0	2	0	0	0	0	0	0	0	0	**10**
19:15 - 19:29	0	0	0	0	0	2	1	0	0	0	0	0	0	0	0	**3**
19:30 - 19:44	0	0	1	3	0	1	0	1	0	0	0	0	0	0	0	**6**
19:45 - 19:59	0	0	1	6	5	0	1	0	0	0	0	0	0	0	0	**13**
20:00 - 20:14	0	1	0	4	5	1	1	0	0	0	0	0	0	0	0	**12**
20:15 - 20:29	0	0	2	3	0	2	1	0	0	0	0	0	0	0	0	**8**
20:30 - 20:44	0	0	1	1	1	3	2	0	0	0	0	0	0	0	0	**8**
20:45 - 20:59	0	0	1	3	0	0	1	0	0	0	0	0	0	0	0	**5**
21:00 - 21:14	0	0	0	2	1	2	0	0	0	0	0	0	0	0	0	**5**
21:15 - 21:29	0	0	0	2	0	0	1	2	0	0	0	0	0	0	0	**5**
21:30 - 21:44	0	0	1	1	1	2	0	0	0	0	1	0	0	0	0	**6**
21:45 - 21:59	0	1	0	0	1	1	0	0	0	0	0	0	0	0	0	**3**
22:00 - 22:14	0	0	0	0	2	0	0	0	0	0	0	0	0	0	0	**2**
22:15 - 22:29	0	1	0	0	2	0	0	0	0	0	0	0	0	0	0	**3**
22:30 - 22:44	0	0	0	0	1	0	0	0	0	0	0	0	0	0	0	**1**
22:45 - 22:59	0	0	0	0	1	0	1	0	0	0	0	0	0	0	0	**2**
23:00 - 23:14	0	1	0	0	0	0	0	0	0	0	0	0	0	0	0	**1**
23:15 - 23:29	0	0	0	1	0	1	0	0	0	0	0	0	0	0	0	**2**
23:30 - 23:44	0	0	0	0	0	0	0	0	0	0	0	0	0	0	0	**0**
23:45 - 23:59	0	0	0	0	0	0	0	0	0	0	0	0	0	0	0	**0**
Totals	**3**	**17**	**50**	**168**	**212**	**142**	**107**	**24**	**0**	**2**	**1**	**0**	**0**	**0**	**0**	**726**
Percent of Total	**0.4**	**2.3**	**6.9**	**23.1**	**29.2**	**19.6**	**14.7**	**3.3**	**0.0**	**0.3**	**0.1**	**0.0**	**0.0**	**0.0**	**0.0**	**100**
Percent of AM	**0.3**	**1.8**	**7.8**	**23.4**	**28.7**	**17.1**	**16.8**	**3.6**	**0.0**	**0.6**	**0.0**	**0.0**	**0.0**	**0.0**	**0.0**	**100**
Percent of PM	**0.5**	**2.8**	**6.1**	**23.0**	**29.6**	**21.7**	**13.0**	**3.1**	**0.0**	**0.0**	**0.3**	**0.0**	**0.0**	**0.0**	**0.0**	**100**

Daily Westbound Speeds (MPH)

Study Date: Tuesday, 09/18/2018
Unit ID: 0162
Location: SW 22ND ST / W OF SW 69TH AV

Standard Deviation:	7.2 MPH	Ten Mile Pace:	15 to 24 MPH	85th Percentile:	31.4 MPH
Mean Speed:	23.8 MPH	Percent in Ten Mile Pace:	52.3%	15th Percentile:	16.4 MPH
Median Speed:	23.5 MPH			90th Percentile:	33.4 MPH
Modal Speed:	23.0 MPH			95th Percentile:	35.5 MPH

Daily Westbound Speeds (MPH)

Study Date: Wednesday, 09/19/2018
Unit ID: 0162
Location: SW 22ND ST / W OF SW 69TH AV

	0-5	5-10	10-15	15-20	20-25	25-30	30-35	35-40	40-45	45-50	50-55	55-60	60-65	65-70	70-75	Total
00:00 - 00:14	0	0	0	0	0	0	0	0	0	0	0	0	0	0	0	**0**
00:15 - 00:29	0	0	0	0	0	0	1	0	0	0	0	0	0	0	0	**1**
00:30 - 00:44	0	0	0	0	0	0	1	0	0	0	0	0	0	0	0	**1**
00:45 - 00:59	0	0	0	0	0	1	1	0	0	0	0	0	0	0	0	**2**
01:00 - 01:14	0	0	0	0	0	0	0	0	0	0	0	0	0	0	0	**0**
01:15 - 01:29	0	0	0	0	0	0	2	0	0	0	0	0	0	0	0	**2**
01:30 - 01:44	0	0	0	1	0	0	0	0	0	0	0	0	0	0	0	**1**
01:45 - 01:59	0	0	1	0	0	0	0	0	0	0	0	0	0	0	0	**1**
02:00 - 02:14	0	0	0	0	0	0	0	0	0	0	0	0	0	0	0	**0**
02:15 - 02:29	0	0	0	0	0	0	0	0	0	0	0	0	0	0	0	**0**
02:30 - 02:44	0	0	0	0	0	0	0	0	0	0	0	0	0	0	0	**0**
02:45 - 02:59	0	0	0	0	0	0	0	0	0	0	0	0	0	0	0	**0**
03:00 - 03:14	0	0	0	0	0	0	0	0	0	0	0	0	0	0	0	**0**
03:15 - 03:29	0	0	0	0	0	0	0	0	0	0	0	0	0	0	0	**0**
03:30 - 03:44	0	0	0	0	1	0	0	0	0	0	0	0	0	0	0	**1**
03:45 - 03:59	0	0	0	0	0	0	0	0	0	0	0	0	0	0	0	**0**
04:00 - 04:14	0	0	1	0	0	1	0	0	0	0	0	0	0	0	0	**2**
04:15 - 04:29	0	0	0	0	0	0	1	0	0	0	0	0	0	0	0	**1**
04:30 - 04:44	0	0	1	0	0	0	0	0	0	0	0	0	0	0	0	**1**
04:45 - 04:59	0	0	0	0	0	0	1	0	0	0	0	0	0	0	0	**1**
05:00 - 05:14	0	0	0	0	0	0	0	0	0	0	0	0	0	0	0	**0**
05:15 - 05:29	0	0	1	0	1	0	0	0	0	0	0	0	0	0	0	**2**
05:30 - 05:44	0	0	0	1	1	0	1	1	0	0	0	0	0	0	0	**4**
05:45 - 05:59	0	0	0	1	2	0	1	0	0	0	0	0	0	0	0	**4**
06:00 - 06:14	0	0	0	0	2	1	1	1	0	0	0	0	0	0	0	**5**
06:15 - 06:29	0	0	1	1	2	0	1	0	0	0	0	0	0	0	0	**5**
06:30 - 06:44	0	0	1	0	2	0	1	0	0	0	0	0	0	0	0	**4**
06:45 - 06:59	0	0	1	1	1	0	0	0	0	0	0	0	0	0	0	**3**
07:00 - 07:14	0	0	0	5	3	1	1	0	0	0	0	0	0	0	0	**10**
07:15 - 07:29	1	0	0	4	5	3	3	1	0	0	0	0	0	0	0	**17**
07:30 - 07:44	0	1	1	4	3	2	3	1	0	0	0	0	0	0	0	**15**
07:45 - 07:59	0	0	3	4	3	1	1	0	0	0	0	0	0	0	0	**12**
08:00 - 08:14	0	1	4	7	3	1	1	0	0	0	0	0	0	0	0	**17**
08:15 - 08:29	0	0	0	1	2	3	3	0	0	0	0	0	0	0	0	**9**
08:30 - 08:44	0	0	2	0	4	3	4	1	0	0	0	0	0	0	0	**14**
08:45 - 08:59	1	2	2	3	4	0	0	0	0	0	0	0	0	0	0	**12**
09:00 - 09:14	0	0	1	7	3	1	0	0	0	0	0	0	0	0	0	**12**
09:15 - 09:29	0	0	2	2	7	0	0	0	0	0	0	0	0	0	0	**11**
09:30 - 09:44	0	0	2	5	5	0	0	0	0	0	0	0	0	0	0	**12**
09:45 - 09:59	0	0	1	4	3	0	0	0	0	0	0	0	0	0	0	**8**
10:00 - 10:14	0	1	1	4	4	4	1	1	0	0	0	0	0	0	0	**16**
10:15 - 10:29	0	1	0	5	2	2	1	0	0	0	0	0	0	0	0	**11**
10:30 - 10:44	0	0	0	3	5	1	2	3	0	0	0	0	0	0	0	**14**
10:45 - 10:59	0	0	0	1	0	3	2	1	0	0	0	0	0	0	0	**7**
11:00 - 11:14	0	0	3	2	4	2	0	0	0	0	0	0	0	0	0	**11**
11:15 - 11:29	0	0	0	3	4	1	0	0	0	0	0	0	0	0	0	**8**
11:30 - 11:44	0	0	0	1	2	2	0	0	0	0	0	0	0	0	0	**5**
11:45 - 11:59	0	0	2	1	6	3	2	1	0	0	0	0	0	0	0	**15**
12:00 - 12:14	0	0	1	2	4	4	0	0	0	0	0	0	0	0	0	**11**
12:15 - 12:29	0	0	0	3	5	1	0	0	0	0	0	0	0	0	0	**9**
12:30 - 12:44	0	0	2	2	8	2	0	0	0	0	0	0	0	0	0	**14**

Daily Westbound Speeds (MPH)

Study Date: Wednesday, 09/19/2018
Unit ID: 0162
Location: SW 22ND ST / W OF SW 69TH AV

	0-5	5-10	10-15	15-20	20-25	25-30	30-35	35-40	40-45	45-50	50-55	55-60	60-65	65-70	70-75	Total
12:45 - 12:59	0	0	1	1	5	1	1	0	0	0	0	0	0	0	0	**9**
13:00 - 13:14	0	0	1	5	5	2	1	0	0	0	0	0	0	0	0	**14**
13:15 - 13:29	0	0	3	3	7	6	2	0	0	0	0	0	0	0	0	**21**
13:30 - 13:44	0	0	2	4	1	3	0	0	0	0	0	0	0	0	0	**10**
13:45 - 13:59	0	0	0	4	1	2	0	0	0	0	0	0	0	0	0	**7**
14:00 - 14:14	0	0	0	0	2	8	4	0	0	0	0	0	0	0	0	**14**
14:15 - 14:29	0	1	1	1	3	3	1	0	0	0	0	0	0	0	0	**10**
14:30 - 14:44	0	0	0	0	3	3	2	1	0	0	0	0	0	0	0	**9**
14:45 - 14:59	0	0	0	2	1	7	2	0	0	0	0	0	0	0	0	**12**
15:00 - 15:14	0	0	0	1	1	2	2	1	0	0	0	0	0	0	0	**7**
15:15 - 15:29	0	0	0	0	6	3	3	0	0	1	0	0	0	0	0	**13**
15:30 - 15:44	0	0	0	3	4	5	3	0	1	0	0	0	0	0	0	**16**
15:45 - 15:59	0	1	2	2	4	2	0	0	0	0	0	0	0	0	0	**11**
16:00 - 16:14	0	0	0	1	8	4	2	0	0	0	0	0	0	0	0	**15**
16:15 - 16:29	0	1	3	5	3	2	0	0	0	0	0	0	0	0	0	**14**
16:30 - 16:44	0	1	3	1	4	5	0	0	0	0	0	0	0	0	0	**14**
16:45 - 16:59	0	0	0	0	2	4	0	1	0	0	0	0	0	0	0	**7**
17:00 - 17:14	0	0	0	4	4	1	1	0	0	0	0	0	0	0	0	**10**
17:15 - 17:29	0	0	2	1	3	3	0	0	0	0	0	0	0	0	0	**9**
17:30 - 17:44	0	0	0	1	2	1	3	1	0	0	0	0	0	0	0	**8**
17:45 - 17:59	0	0	0	2	8	0	3	1	0	0	0	0	0	0	0	**14**
18:00 - 18:14	0	0	0	2	2	1	1	0	0	0	0	0	0	0	0	**6**
18:15 - 18:29	0	0	0	1	4	0	2	1	0	0	0	0	0	0	0	**8**
18:30 - 18:44	0	0	0	2	2	2	0	0	0	0	0	0	0	0	0	**6**
18:45 - 18:59	0	0	0	2	5	2	1	0	0	0	0	0	0	0	0	**10**
19:00 - 19:14	0	0	1	1	7	2	0	1	0	0	0	0	0	0	0	**12**
19:15 - 19:29	0	0	0	1	4	5	2	0	0	0	0	0	0	0	0	**12**
19:30 - 19:44	0	0	0	2	3	4	0	0	0	0	0	0	0	0	0	**9**
19:45 - 19:59	0	0	0	1	1	1	1	0	0	1	0	0	0	0	0	**5**
20:00 - 20:14	0	0	0	3	2	1	0	1	0	0	0	0	0	0	0	**7**
20:15 - 20:29	0	0	0	3	5	3	1	1	0	0	0	0	0	0	0	**13**
20:30 - 20:44	0	0	1	2	1	2	1	0	0	0	0	0	0	0	0	**7**
20:45 - 20:59	0	0	0	0	1	1	0	0	0	0	0	0	0	0	0	**2**
21:00 - 21:14	0	0	0	2	2	3	1	1	0	0	0	0	0	0	0	**9**
21:15 - 21:29	0	0	0	1	3	1	1	1	0	0	0	0	0	0	0	**7**
21:30 - 21:44	0	0	0	2	0	2	1	0	0	0	0	0	0	0	0	**5**
21:45 - 21:59	0	0	0	2	1	0	0	0	0	0	0	0	0	0	0	**3**
22:00 - 22:14	0	0	0	1	2	0	0	0	0	0	0	0	0	0	0	**3**
22:15 - 22:29	0	1	2	0	3	0	1	0	0	0	0	0	0	0	0	**7**
22:30 - 22:44	0	0	0	2	1	3	1	0	0	0	0	0	0	0	0	**7**
22:45 - 22:59	0	0	0	1	0	0	1	0	0	0	0	0	0	0	0	**2**
23:00 - 23:14	0	0	0	1	0	1	1	1	0	0	0	0	0	0	0	**4**
23:15 - 23:29	0	0	0	0	0	0	0	0	0	0	0	0	0	0	0	**0**
23:30 - 23:44	0	0	0	1	0	1	0	0	0	0	0	0	0	0	0	**2**
23:45 - 23:59	0	0	0	0	0	1	0	1	0	0	0	0	0	0	0	**2**
Totals	**2**	**11**	**56**	**152**	**227**	**146**	**82**	**24**	**1**	**2**	**0**	**0**	**0**	**0**	**0**	**703**
Percent of Total	**0.3**	**1.6**	**8.0**	**21.6**	**32.3**	**20.8**	**11.7**	**3.4**	**0.1**	**0.3**	**0.0**	**0.0**	**0.0**	**0.0**	**0.0**	**100**
Percent of AM	**0.7**	**2.2**	**11.2**	**25.6**	**30.3**	**13.0**	**13.0**	**4.0**	**0.0**	**0.0**	**0.0**	**0.0**	**0.0**	**0.0**	**0.0**	**100**
Percent of PM	**0.0**	**1.2**	**5.9**	**19.0**	**33.6**	**25.8**	**10.8**	**3.1**	**0.2**	**0.5**	**0.0**	**0.0**	**0.0**	**0.0**	**0.0**	**100**

Daily Westbound Speeds (MPH)

Study Date: Wednesday, 09/19/2018
Unit ID: 0162
Location: SW 22ND ST / W OF SW 69TH AV

Standard Deviation:	6.9 MPH	Ten Mile Pace:	15 to 24 MPH	85th Percentile:	30.2 MPH
Mean Speed:	23.6 MPH	Percent in Ten Mile Pace:	53.9%		
Median Speed:	23.4 MPH			15th Percentile:	16.4 MPH
Modal Speed:	23.0 MPH			90th Percentile:	32.8 MPH
				95th Percentile:	35.4 MPH

Daily Westbound Speeds (MPH)

Study Date: Thursday, 09/20/2018
Unit ID: 0162
Location: SW 22ND ST / W OF SW 69TH AV

	0-5	5-10	10-15	15-20	20-25	25-30	30-35	35-40	40-45	45-50	50-55	55-60	60-65	65-70	70-75	Total
00:00 - 00:14	0	0	0	1	0	1	0	0	0	0	0	0	0	0	0	**2**
00:15 - 00:29	0	0	0	0	0	0	0	0	0	0	0	0	0	0	0	**0**
00:30 - 00:44	0	0	0	0	1	0	0	0	0	0	0	0	0	0	0	**1**
00:45 - 00:59	0	0	0	0	0	0	0	0	1	0	0	0	0	0	0	**1**
01:00 - 01:14	0	0	0	0	0	1	1	0	0	1	0	0	0	0	0	**3**
01:15 - 01:29	0	0	0	0	0	0	0	1	0	0	0	0	0	0	0	**1**
01:30 - 01:44	0	0	0	0	0	1	0	0	0	0	0	0	0	0	0	**1**
01:45 - 01:59	0	0	0	0	0	0	0	0	0	0	0	0	0	0	0	**0**
02:00 - 02:14	0	0	0	0	0	0	1	0	0	0	0	0	0	0	0	**1**
02:15 - 02:29	0	0	0	0	0	0	0	0	0	0	0	0	0	0	0	**0**
02:30 - 02:44	0	0	0	0	0	0	0	0	0	0	0	0	0	0	0	**0**
02:45 - 02:59	0	0	0	0	0	0	0	0	0	0	0	0	0	0	0	**0**
03:00 - 03:14	0	0	0	0	0	0	0	0	0	0	0	0	0	0	0	**0**
03:15 - 03:29	0	0	0	0	0	0	0	0	0	0	0	0	0	0	0	**0**
03:30 - 03:44	0	0	0	0	0	0	0	0	0	0	0	0	0	0	0	**0**
03:45 - 03:59	0	0	0	0	0	0	0	0	0	0	0	0	0	0	0	**0**
04:00 - 04:14	0	0	0	0	0	0	1	0	0	0	0	0	0	0	0	**1**
04:15 - 04:29	0	0	0	0	0	1	0	0	0	0	0	0	0	0	0	**1**
04:30 - 04:44	0	1	0	0	0	0	0	0	0	0	0	0	0	0	0	**1**
04:45 - 04:59	0	0	0	0	0	1	0	0	0	0	0	0	0	0	0	**1**
05:00 - 05:14	0	0	0	0	1	0	0	0	0	0	0	0	0	0	0	**1**
05:15 - 05:29	0	0	0	0	0	0	0	0	0	0	0	0	0	0	0	**0**
05:30 - 05:44	0	0	1	1	3	2	2	0	0	0	0	0	0	0	0	**9**
05:45 - 05:59	0	0	0	3	1	0	2	0	0	0	0	0	0	0	0	**6**
06:00 - 06:14	0	0	0	2	3	1	0	0	0	0	0	0	0	0	0	**6**
06:15 - 06:29	0	0	1	2	2	0	0	0	0	0	0	0	0	0	0	**5**
06:30 - 06:44	0	1	0	4	4	0	1	0	0	0	0	0	0	0	0	**10**
06:45 - 06:59	0	0	0	1	0	5	0	1	0	0	0	0	0	0	0	**7**
07:00 - 07:14	0	0	0	5	4	2	1	1	0	0	0	0	0	0	0	**13**
07:15 - 07:29	0	0	1	12	4	1	1	1	0	0	0	0	0	0	0	**20**
07:30 - 07:44	0	1	4	4	6	3	2	0	0	0	0	0	0	0	0	**20**
07:45 - 07:59	0	1	11	18	14	0	0	0	0	0	0	0	0	0	0	**44**
08:00 - 08:14	0	4	14	21	11	6	1	0	0	0	0	0	0	0	0	**57**
08:15 - 08:29	0	0	3	4	8	5	2	0	0	0	0	0	0	0	0	**22**
08:30 - 08:44	0	0	0	2	5	8	7	3	0	0	0	0	0	0	0	**25**
08:45 - 08:59	0	0	0	2	8	3	3	1	0	0	0	0	0	0	0	**17**
09:00 - 09:14	0	0	1	4	8	5	5	1	0	0	0	0	0	0	0	**24**
09:15 - 09:29	0	0	0	2	6	8	5	1	0	0	0	0	0	0	0	**22**
09:30 - 09:44	1	1	0	1	2	3	1	1	0	0	0	0	0	0	0	**10**
09:45 - 09:59	0	0	0	7	3	5	2	1	0	0	0	0	0	0	0	**18**
10:00 - 10:14	0	0	0	2	2	1	2	0	1	0	0	0	0	0	0	**8**
10:15 - 10:29	0	1	1	1	3	7	3	0	1	0	0	0	0	0	0	**17**
10:30 - 10:44	0	0	1	2	1	1	0	0	0	0	0	0	0	0	0	**5**
10:45 - 10:59	0	0	2	2	1	1	2	0	0	0	0	0	0	0	0	**8**
11:00 - 11:14	0	0	0	1	2	3	1	0	0	0	0	0	0	0	0	**7**
11:15 - 11:29	0	0	1	0	3	2	3	0	0	0	0	0	0	0	0	**9**
11:30 - 11:44	0	0	0	0	1	4	1	0	0	0	0	0	0	0	0	**6**
11:45 - 11:59	0	0	0	2	1	1	1	0	0	0	0	0	0	0	0	**5**
12:00 - 12:14	0	0	0	0	4	2	1	0	0	0	0	0	0	0	0	**7**
12:15 - 12:29	0	0	0	7	1	3	0	1	0	0	0	0	0	0	0	**12**
12:30 - 12:44	0	0	1	1	2	0	0	0	0	0	0	0	0	0	0	**4**

Daily Westbound Speeds (MPH)

Study Date: Thursday, 09/20/2018
Unit ID: 0162
Location: SW 22ND ST / W OF SW 69TH AV

	0-5	5-10	10-15	15-20	20-25	25-30	30-35	35-40	40-45	45-50	50-55	55-60	60-65	65-70	70-75	Total
12:45 - 12:59	0	0	1	2	0	1	2	1	0	0	0	0	0	0	0	**7**
13:00 - 13:14	0	0	1	0	3	1	1	0	0	0	0	0	0	0	0	**6**
13:15 - 13:29	0	0	0	0	0	3	1	0	0	0	0	0	0	0	0	**4**
13:30 - 13:44	0	0	0	6	4	2	1	1	0	0	0	0	0	0	0	**14**
13:45 - 13:59	0	0	0	0	6	3	0	0	0	0	0	0	0	0	0	**9**
14:00 - 14:14	0	0	0	2	1	5	2	3	0	0	0	0	0	0	0	**13**
14:15 - 14:29	0	0	0	1	5	0	0	1	0	0	0	0	0	0	0	**7**
14:30 - 14:44	0	0	1	3	6	6	1	1	0	0	0	0	0	0	0	**18**
14:45 - 14:59	0	0	1	4	11	5	0	1	0	0	0	0	0	0	0	**22**
15:00 - 15:14	0	1	2	3	2	3	3	2	0	0	0	0	0	0	0	**16**
15:15 - 15:29	0	0	0	2	5	6	1	0	0	0	0	0	0	0	0	**14**
15:30 - 15:44	0	0	0	1	9	2	2	1	0	0	0	0	0	0	0	**15**
15:45 - 15:59	0	1	3	7	10	2	1	0	1	0	0	0	0	0	0	**25**
16:00 - 16:14	0	0	0	6	9	3	3	0	0	0	0	0	0	0	0	**21**
16:15 - 16:29	0	0	2	5	5	1	1	0	0	0	0	0	0	0	0	**14**
16:30 - 16:44	0	0	0	3	5	2	2	1	0	0	0	0	0	0	0	**13**
16:45 - 16:59	0	0	0	3	4	5	1	1	0	0	0	0	0	0	0	**14**
17:00 - 17:14	0	0	0	1	2	5	2	1	0	0	0	0	0	0	0	**11**
17:15 - 17:29	0	1	0	3	8	2	1	0	0	0	0	0	0	0	0	**15**
17:30 - 17:44	0	0	3	1	5	5	6	1	0	0	0	0	0	0	0	**21**
17:45 - 17:59	0	0	0	2	6	3	1	0	0	0	0	0	0	0	0	**12**
18:00 - 18:14	0	0	0	0	3	4	1	0	0	0	0	0	0	0	0	**8**
18:15 - 18:29	0	0	1	0	4	6	1	1	0	0	0	0	0	0	0	**13**
18:30 - 18:44	0	0	0	1	3	2	3	0	0	0	0	0	0	0	0	**9**
18:45 - 18:59	0	1	1	3	6	2	2	1	0	0	0	0	0	0	0	**16**
19:00 - 19:14	0	0	0	1	5	5	2	0	0	0	0	0	0	0	0	**13**
19:15 - 19:29	0	0	0	0	8	4	3	0	0	0	0	0	0	0	0	**15**
19:30 - 19:44	0	0	0	3	6	3	2	0	0	0	0	0	0	0	0	**14**
19:45 - 19:59	0	0	0	5	3	2	0	0	0	0	0	0	0	0	0	**10**
20:00 - 20:14	0	0	0	1	5	4	1	0	0	0	0	0	0	0	0	**11**
20:15 - 20:29	0	0	0	1	3	2	1	0	0	0	0	0	0	0	0	**7**
20:30 - 20:44	0	0	0	1	5	1	0	0	1	0	0	0	0	0	0	**8**
20:45 - 20:59	0	0	1	7	3	4	1	0	0	0	0	0	0	0	0	**16**
21:00 - 21:14	0	0	1	3	4	1	1	0	0	0	0	0	0	0	0	**10**
21:15 - 21:29	0	0	1	2	3	1	1	0	0	0	0	0	0	0	0	**8**
21:30 - 21:44	0	0	0	0	4	0	4	0	0	0	0	0	0	0	0	**8**
21:45 - 21:59	0	0	0	2	2	1	2	0	0	0	0	0	0	0	0	**7**
22:00 - 22:14	0	0	2	2	1	1	1	0	0	0	0	0	0	0	0	**7**
22:15 - 22:29	0	1	0	1	0	2	1	1	0	0	0	0	0	0	0	**6**
22:30 - 22:44	0	0	0	0	1	2	0	0	0	0	0	0	0	0	0	**3**
22:45 - 22:59	0	0	0	1	0	3	0	0	0	0	0	0	0	0	0	**4**
23:00 - 23:14	0	0	0	0	2	1	0	0	0	0	0	0	0	0	0	**3**
23:15 - 23:29	0	0	0	0	0	0	0	1	0	0	0	0	0	0	0	**1**
23:30 - 23:44	0	0	0	0	1	1	0	0	0	0	0	0	0	0	0	**2**
23:45 - 23:59	0	0	0	0	0	1	0	0	0	0	0	0	0	0	0	**1**
Totals	**1**	**15**	**63**	**203**	**293**	**205**	**111**	**32**	**5**	**1**	**0**	**0**	**0**	**0**	**0**	**929**
Percent of Total	**0.1**	**1.6**	**6.8**	**21.9**	**31.5**	**22.1**	**11.9**	**3.4**	**0.5**	**0.1**	**0.0**	**0.0**	**0.0**	**0.0**	**0.0**	**100**
Percent of AM	**0.2**	**2.4**	**9.9**	**25.5**	**26.0**	**19.8**	**12.3**	**2.9**	**0.7**	**0.2**	**0.0**	**0.0**	**0.0**	**0.0**	**0.0**	**100**
Percent of PM	**0.0**	**1.0**	**4.3**	**18.9**	**36.0**	**23.9**	**11.7**	**3.9**	**0.4**	**0.0**	**0.0**	**0.0**	**0.0**	**0.0**	**0.0**	**100**

Daily Westbound Speeds (MPH)

Study Date: Thursday, 09/20/2018
Unit ID: 0162
Location: SW 22ND ST / W OF SW 69TH AV

Standard Deviation:	6.8 MPH	Ten Mile Pace:	20 to 29 MPH	85th Percentile:	30.5 MPH
Mean Speed:	23.9 MPH	Percent in Ten Mile Pace:	53.6%		
Median Speed:	23.7 MPH			15th Percentile:	16.8 MPH
Modal Speed:	23.0 MPH			90th Percentile:	33.0 MPH
				95th Percentile:	35.5 MPH

Daily Eastbound Speeds (MPH)

Study Date: Tuesday, 09/18/2018
Unit ID: 0168
Location: SW 21ST ST / E OF SW 70TH AV

	0-5	5-10	10-15	15-20	20-25	25-30	30-35	35-40	40-45	45-50	50-55	55-60	60-65	65-70	70-75	Total
00:00 - 00:14	0	0	0	0	1	0	0	0	0	0	0	0	0	0	0	**1**
00:15 - 00:29	0	0	0	0	1	0	0	0	0	0	0	0	0	0	0	**1**
00:30 - 00:44	0	0	0	0	0	0	1	0	0	0	0	0	0	0	0	**1**
00:45 - 00:59	0	0	0	0	1	2	0	0	0	0	0	0	0	0	0	**3**
01:00 - 01:14	0	0	0	0	0	0	1	0	0	0	0	0	0	0	0	**1**
01:15 - 01:29	0	0	0	0	1	0	0	0	0	0	0	0	0	0	0	**1**
01:30 - 01:44	0	0	0	0	1	0	0	0	0	0	0	0	0	0	0	**1**
01:45 - 01:59	0	0	0	0	0	0	0	0	0	0	0	0	0	0	0	**0**
02:00 - 02:14	0	0	0	0	0	0	0	0	0	0	0	0	0	0	0	**0**
02:15 - 02:29	0	0	0	0	0	0	0	0	0	0	0	0	0	0	0	**0**
02:30 - 02:44	0	0	0	0	0	0	0	0	0	0	0	0	0	0	0	**0**
02:45 - 02:59	0	0	0	0	1	0	0	0	0	0	0	0	0	0	0	**1**
03:00 - 03:14	0	0	0	0	0	0	0	0	0	0	0	0	0	0	0	**0**
03:15 - 03:29	0	0	0	1	0	0	0	0	0	0	0	0	0	0	0	**1**
03:30 - 03:44	0	0	0	0	0	1	0	0	0	0	0	0	0	0	0	**1**
03:45 - 03:59	0	0	0	0	0	1	0	0	0	0	0	0	0	0	0	**1**
04:00 - 04:14	0	0	0	0	2	0	0	0	0	0	0	0	0	0	0	**2**
04:15 - 04:29	0	0	0	0	0	1	0	0	0	0	0	0	0	0	0	**1**
04:30 - 04:44	0	0	0	1	0	0	0	0	0	0	0	0	0	0	0	**1**
04:45 - 04:59	0	0	0	0	1	0	0	0	0	0	0	0	0	0	0	**1**
05:00 - 05:14	0	0	0	1	0	1	0	0	0	0	0	0	0	0	0	**2**
05:15 - 05:29	0	0	0	1	3	0	0	0	0	0	0	0	0	0	0	**4**
05:30 - 05:44	0	0	0	0	6	1	0	0	0	0	0	0	0	0	0	**7**
05:45 - 05:59	0	0	0	0	2	0	1	0	0	0	0	0	0	0	0	**3**
06:00 - 06:14	0	0	0	0	1	3	1	0	0	0	0	0	0	0	0	**5**
06:15 - 06:29	0	0	0	1	3	2	1	0	0	0	0	0	0	0	0	**7**
06:30 - 06:44	0	0	0	1	8	2	0	0	0	0	0	0	0	0	0	**11**
06:45 - 06:59	0	0	0	4	8	7	0	0	0	0	0	0	0	0	0	**19**
07:00 - 07:14	0	0	0	2	10	11	2	0	0	0	0	0	0	0	0	**25**
07:15 - 07:29	0	0	0	0	17	6	1	0	0	0	0	0	0	0	0	**24**
07:30 - 07:44	0	0	1	4	13	15	2	0	0	0	0	0	0	0	0	**35**
07:45 - 07:59	0	0	1	6	14	10	6	1	1	0	0	0	0	0	0	**39**
08:00 - 08:14	0	1	0	2	16	15	4	0	0	0	0	0	0	0	0	**38**
08:15 - 08:29	0	1	1	1	17	22	0	0	0	0	0	0	0	0	0	**42**
08:30 - 08:44	0	0	0	5	17	18	4	0	0	0	0	0	0	0	0	**44**
08:45 - 08:59	0	0	0	3	27	24	4	1	0	0	0	0	0	0	0	**59**
09:00 - 09:14	0	0	1	2	12	14	3	0	0	0	0	0	0	0	0	**32**
09:15 - 09:29	0	0	1	7	11	8	3	0	0	0	0	0	0	0	0	**30**
09:30 - 09:44	0	1	0	0	10	4	0	0	0	0	0	0	0	0	0	**15**
09:45 - 09:59	0	0	1	1	7	6	0	0	0	0	0	0	0	0	0	**15**
10:00 - 10:14	0	0	0	0	6	1	0	0	0	0	0	0	0	0	0	**7**
10:15 - 10:29	0	1	0	1	13	5	0	0	0	0	0	0	0	0	0	**20**
10:30 - 10:44	0	0	0	0	11	1	0	0	0	0	0	0	0	0	0	**12**
10:45 - 10:59	0	0	0	3	9	4	1	0	0	0	0	0	0	0	0	**17**
11:00 - 11:14	0	0	1	4	4	3	0	0	0	0	0	0	0	0	0	**12**
11:15 - 11:29	0	0	0	5	11	1	0	0	0	0	0	0	0	0	0	**17**
11:30 - 11:44	0	0	1	5	10	3	1	0	0	0	0	0	0	0	0	**20**
11:45 - 11:59	0	0	0	1	3	3	1	0	0	0	0	0	0	0	0	**8**
12:00 - 12:14	0	0	1	1	5	8	0	0	0	0	0	0	0	0	0	**15**
12:15 - 12:29	0	0	1	7	4	4	0	0	0	0	0	0	0	0	0	**16**
12:30 - 12:44	0	0	0	1	7	5	2	0	0	0	0	0	0	0	0	**15**

Daily Eastbound Speeds (MPH)

Study Date: Tuesday, 09/18/2018
Unit ID: 0168
Location: SW 21ST ST / E OF SW 70TH AV

	0-5	5-10	10-15	15-20	20-25	25-30	30-35	35-40	40-45	45-50	50-55	55-60	60-65	65-70	70-75	Total
12:45 - 12:59	0	0	0	3	11	2	2	0	0	0	0	0	0	0	0	**18**
13:00 - 13:14	0	0	1	2	2	2	1	0	0	0	0	0	0	0	0	**8**
13:15 - 13:29	0	0	1	4	14	7	0	1	0	0	0	0	0	0	0	**27**
13:30 - 13:44	0	1	1	1	9	4	1	0	0	0	0	0	0	0	0	**17**
13:45 - 13:59	0	1	1	3	7	1	0	0	0	0	0	0	0	0	0	**13**
14:00 - 14:14	0	0	2	0	3	5	0	0	0	0	0	0	0	0	0	**10**
14:15 - 14:29	0	0	0	0	7	6	0	0	0	0	0	0	0	0	0	**13**
14:30 - 14:44	0	1	1	2	15	6	0	1	0	0	0	0	0	0	0	**26**
14:45 - 14:59	0	0	1	1	7	5	1	1	0	0	0	0	0	0	0	**16**
15:00 - 15:14	0	0	0	1	8	5	1	0	0	0	0	0	0	0	0	**15**
15:15 - 15:29	0	0	2	7	8	8	0	0	0	0	0	0	0	0	0	**25**
15:30 - 15:44	0	0	0	3	13	4	0	0	0	0	0	0	0	0	0	**20**
15:45 - 15:59	0	0	1	4	11	3	0	1	0	0	0	0	0	0	0	**20**
16:00 - 16:14	0	1	0	2	9	4	1	0	0	0	0	0	0	0	0	**17**
16:15 - 16:29	0	0	1	1	9	3	0	0	0	0	0	0	0	0	0	**14**
16:30 - 16:44	0	1	3	1	12	8	1	0	0	0	0	0	0	0	0	**26**
16:45 - 16:59	0	0	0	3	9	5	1	0	0	0	0	0	0	0	0	**18**
17:00 - 17:14	0	0	0	5	3	2	0	0	0	0	0	0	0	0	0	**10**
17:15 - 17:29	0	0	0	1	7	3	1	0	0	0	0	0	0	0	0	**12**
17:30 - 17:44	0	0	1	1	14	3	2	0	0	0	0	0	0	0	0	**21**
17:45 - 17:59	0	0	1	5	4	2	1	0	0	0	0	0	0	0	0	**13**
18:00 - 18:14	0	0	2	5	17	2	1	0	0	0	0	0	0	0	0	**27**
18:15 - 18:29	0	0	0	0	8	3	0	0	0	0	0	0	0	0	0	**11**
18:30 - 18:44	0	0	2	2	10	5	1	0	0	0	0	0	0	0	0	**20**
18:45 - 18:59	0	1	0	3	4	0	1	0	0	0	0	0	0	0	0	**9**
19:00 - 19:14	0	0	2	6	7	3	0	0	0	0	0	0	0	0	0	**18**
19:15 - 19:29	0	0	0	3	8	8	0	0	0	0	0	0	0	0	0	**19**
19:30 - 19:44	0	0	1	2	8	0	1	0	0	0	0	0	0	0	0	**12**
19:45 - 19:59	0	0	0	4	11	1	0	0	0	0	0	0	0	0	0	**16**
20:00 - 20:14	0	0	1	4	7	5	0	0	0	0	0	0	0	0	0	**17**
20:15 - 20:29	0	0	0	2	13	7	0	0	0	0	0	0	0	0	0	**22**
20:30 - 20:44	0	0	0	2	8	3	0	1	0	0	0	0	0	0	0	**14**
20:45 - 20:59	0	0	1	3	5	1	1	0	0	0	0	0	0	0	0	**11**
21:00 - 21:14	0	0	1	1	6	0	1	0	0	0	0	0	0	0	0	**9**
21:15 - 21:29	0	0	2	0	1	0	0	0	0	0	0	0	0	0	0	**3**
21:30 - 21:44	0	0	1	3	1	2	0	0	0	0	0	0	0	0	0	**7**
21:45 - 21:59	0	0	1	2	3	3	0	0	0	0	0	0	0	0	0	**9**
22:00 - 22:14	0	0	1	1	4	0	2	0	0	0	0	0	0	0	0	**8**
22:15 - 22:29	0	0	0	2	6	2	0	0	0	0	0	0	0	0	0	**10**
22:30 - 22:44	0	0	0	1	2	1	0	0	0	0	0	0	0	0	0	**4**
22:45 - 22:59	0	0	0	1	4	0	0	0	0	0	0	0	0	0	0	**5**
23:00 - 23:14	0	0	0	2	0	1	0	0	0	0	0	0	0	0	0	**3**
23:15 - 23:29	0	0	0	1	2	1	0	0	0	0	0	0	0	0	0	**4**
23:30 - 23:44	0	0	0	1	0	0	0	0	0	0	0	0	0	0	0	**1**
23:45 - 23:59	0	0	0	2	0	0	0	0	0	0	0	0	0	0	0	**2**
Totals	**0**	**10**	**42**	**174**	**611**	**348**	**60**	**7**	**1**	**0**	**0**	**0**	**0**	**0**	**0**	**1253**
Percent of Total	**0.0**	**0.8**	**3.4**	**13.9**	**48.8**	**27.8**	**4.8**	**0.6**	**0.1**	**0.0**	**0.0**	**0.0**	**0.0**	**0.0**	**0.0**	**100**
Percent of AM	**0.0**	**0.7**	**1.4**	**10.6**	**47.4**	**33.2**	**6.3**	**0.3**	**0.2**	**0.0**	**0.0**	**0.0**	**0.0**	**0.0**	**0.0**	**100**
Percent of PM	**0.0**	**0.9**	**5.1**	**16.8**	**50.0**	**23.0**	**3.5**	**0.8**	**0.0**	**0.0**	**0.0**	**0.0**	**0.0**	**0.0**	**0.0**	**100**

Daily Eastbound Speeds (MPH)

Study Date: Tuesday, 09/18/2018
Unit ID: 0168
Location: SW 21ST ST / E OF SW 70TH AV

Standard Deviation:	4.9 MPH	Ten Mile Pace:	20 to 29 MPH	85th Percentile:	28.9 MPH
Mean Speed:	23.8 MPH	Percent in Ten Mile Pace:	76.5%	15th Percentile:	19.7 MPH
Median Speed:	23.9 MPH			90th Percentile:	30.0 MPH
Modal Speed:	23.0 MPH			95th Percentile:	30.5 MPH

Daily Eastbound Speeds (MPH)

Study Date: Wednesday, 09/19/2018
Unit ID: 0168
Location: SW 21ST ST / E OF SW 70TH AV

	0-5	5-10	10-15	15-20	20-25	25-30	30-35	35-40	40-45	45-50	50-55	55-60	60-65	65-70	70-75	Total
00:00 - 00:14	0	0	0	0	0	0	0	0	0	0	0	0	0	0	0	**0**
00:15 - 00:29	0	0	0	1	1	0	0	0	0	0	0	0	0	0	0	**2**
00:30 - 00:44	0	0	0	1	1	0	0	0	0	0	0	0	0	0	0	**2**
00:45 - 00:59	0	0	0	0	0	0	0	0	0	0	0	0	0	0	0	**0**
01:00 - 01:14	0	0	0	0	0	0	0	0	0	0	0	0	0	0	0	**0**
01:15 - 01:29	0	0	0	0	0	1	0	0	0	0	0	0	0	0	0	**1**
01:30 - 01:44	0	0	0	0	0	0	0	0	0	0	0	0	0	0	0	**0**
01:45 - 01:59	0	0	0	0	0	0	0	0	0	0	0	0	0	0	0	**0**
02:00 - 02:14	0	0	0	0	0	0	0	0	0	0	0	0	0	0	0	**0**
02:15 - 02:29	0	0	1	0	1	0	0	0	0	0	0	0	0	0	0	**2**
02:30 - 02:44	0	0	0	0	0	1	1	0	0	0	0	0	0	0	0	**2**
02:45 - 02:59	0	0	0	0	0	0	0	0	0	0	0	0	0	0	0	**0**
03:00 - 03:14	0	0	0	0	0	0	0	0	0	0	0	0	0	0	0	**0**
03:15 - 03:29	0	0	0	0	0	0	0	0	0	0	0	0	0	0	0	**0**
03:30 - 03:44	0	0	0	0	1	0	0	0	0	0	0	0	0	0	0	**1**
03:45 - 03:59	0	0	0	0	0	0	0	0	0	0	0	0	0	0	0	**0**
04:00 - 04:14	0	0	0	0	2	0	1	0	0	0	0	0	0	0	0	**3**
04:15 - 04:29	0	0	0	0	0	0	0	0	0	0	0	0	0	0	0	**0**
04:30 - 04:44	0	0	0	0	0	0	0	0	0	0	0	0	0	0	0	**0**
04:45 - 04:59	0	0	0	0	0	1	0	0	0	0	0	0	0	0	0	**1**
05:00 - 05:14	0	0	0	1	1	0	0	0	0	0	0	0	0	0	0	**2**
05:15 - 05:29	0	0	0	0	1	0	0	0	0	0	0	0	0	0	0	**1**
05:30 - 05:44	0	0	0	0	2	0	0	0	0	0	0	0	0	0	0	**2**
05:45 - 05:59	0	0	0	0	3	0	1	0	0	0	0	0	0	0	0	**4**
06:00 - 06:14	0	0	0	2	2	2	1	0	1	0	0	0	0	0	0	**8**
06:15 - 06:29	0	0	0	0	2	2	0	0	0	0	0	0	0	0	0	**4**
06:30 - 06:44	0	0	0	2	9	3	1	0	0	0	0	0	0	0	0	**15**
06:45 - 06:59	0	0	0	1	11	4	0	0	0	0	0	0	0	0	0	**16**
07:00 - 07:14	0	0	0	2	7	5	3	0	0	0	0	0	0	0	0	**17**
07:15 - 07:29	0	0	1	0	14	7	0	0	0	0	0	0	0	0	0	**22**
07:30 - 07:44	0	1	0	4	18	9	1	0	1	0	0	0	0	0	0	**34**
07:45 - 07:59	0	0	0	3	9	9	3	0	0	0	0	0	0	0	0	**24**
08:00 - 08:14	0	1	4	3	16	15	3	0	0	0	0	0	0	0	0	**42**
08:15 - 08:29	0	0	0	4	12	16	3	0	0	0	0	0	0	0	0	**35**
08:30 - 08:44	0	0	2	2	17	16	2	0	0	0	0	0	0	0	0	**39**
08:45 - 08:59	0	0	1	1	16	17	1	0	0	0	0	0	0	0	0	**36**
09:00 - 09:14	0	0	0	4	14	6	1	0	0	0	0	0	0	0	0	**25**
09:15 - 09:29	0	0	0	5	9	1	1	0	0	0	0	0	0	0	0	**16**
09:30 - 09:44	0	0	0	2	12	6	0	0	0	0	0	0	0	0	0	**20**
09:45 - 09:59	0	1	2	1	2	2	2	0	0	0	0	0	0	0	0	**10**
10:00 - 10:14	0	0	2	2	5	3	0	0	0	0	0	0	0	0	0	**12**
10:15 - 10:29	0	0	0	4	6	5	0	0	0	0	0	0	0	0	0	**15**
10:30 - 10:44	0	0	0	2	7	1	0	0	0	0	0	0	0	0	0	**10**
10:45 - 10:59	0	1	1	3	7	4	0	0	0	0	0	0	0	0	0	**16**
11:00 - 11:14	0	0	0	5	5	4	0	0	0	0	0	0	0	0	0	**14**
11:15 - 11:29	0	0	1	3	7	5	0	0	0	0	0	0	0	0	0	**16**
11:30 - 11:44	0	0	1	4	6	4	0	0	0	0	0	0	0	0	0	**15**
11:45 - 11:59	0	0	1	3	8	3	1	0	0	0	0	0	0	0	0	**16**
12:00 - 12:14	0	0	0	3	7	3	1	0	0	0	0	0	0	0	0	**14**
12:15 - 12:29	0	0	0	1	9	5	1	0	0	0	0	0	0	0	0	**16**
12:30 - 12:44	0	0	0	2	5	3	1	0	0	0	0	0	0	0	0	**11**

Daily Eastbound Speeds (MPH)

Study Date: Wednesday, 09/19/2018
Unit ID: 0168
Location: SW 21ST ST / E OF SW 70TH AV

	0-5	5-10	10-15	15-20	20-25	25-30	30-35	35-40	40-45	45-50	50-55	55-60	60-65	65-70	70-75	Total
12:45 - 12:59	0	0	1	2	6	3	2	0	0	0	0	0	0	0	0	**14**
13:00 - 13:14	0	0	0	2	5	6	1	0	0	0	0	0	0	0	0	**14**
13:15 - 13:29	0	0	0	7	6	2	0	0	0	0	0	0	0	0	0	**15**
13:30 - 13:44	0	0	1	1	5	4	1	0	0	0	0	0	0	0	0	**12**
13:45 - 13:59	0	0	0	3	5	4	0	0	0	0	0	0	0	0	0	**12**
14:00 - 14:14	0	0	0	3	12	5	1	0	0	0	0	0	0	0	0	**21**
14:15 - 14:29	0	0	2	2	7	4	0	1	0	0	0	0	0	0	0	**16**
14:30 - 14:44	0	0	1	6	8	4	0	0	0	0	0	0	0	0	0	**19**
14:45 - 14:59	0	0	0	6	9	1	1	0	0	0	0	0	0	0	0	**17**
15:00 - 15:14	0	0	1	0	6	3	1	0	0	0	0	0	0	0	0	**11**
15:15 - 15:29	0	0	1	0	3	1	1	0	0	0	0	0	0	0	0	**6**
15:30 - 15:44	0	0	0	5	7	4	1	0	0	0	0	0	0	0	0	**17**
15:45 - 15:59	0	1	1	2	10	6	1	0	0	0	0	0	0	0	0	**21**
16:00 - 16:14	0	0	1	4	10	3	0	0	0	0	0	0	0	0	0	**18**
16:15 - 16:29	0	0	2	3	5	8	0	0	0	0	0	0	0	0	0	**18**
16:30 - 16:44	0	0	2	4	4	6	0	0	0	0	0	0	0	0	0	**16**
16:45 - 16:59	0	0	1	3	7	4	0	0	0	0	0	0	0	0	0	**15**
17:00 - 17:14	0	1	0	4	9	5	0	0	0	0	0	0	0	0	0	**19**
17:15 - 17:29	0	0	1	1	6	3	0	0	0	0	0	0	0	0	0	**11**
17:30 - 17:44	0	0	1	0	5	5	0	0	0	0	0	0	0	0	0	**11**
17:45 - 17:59	0	0	1	2	11	7	2	0	0	0	0	0	0	0	0	**23**
18:00 - 18:14	0	1	1	3	5	6	0	0	0	0	0	0	0	0	0	**16**
18:15 - 18:29	0	0	1	3	7	0	0	0	0	0	0	0	0	0	0	**11**
18:30 - 18:44	0	1	0	7	10	3	0	0	0	0	0	0	0	0	0	**21**
18:45 - 18:59	0	0	0	2	8	4	0	0	0	0	0	0	0	0	0	**14**
19:00 - 19:14	0	0	2	3	8	1	1	0	0	0	0	0	0	0	0	**15**
19:15 - 19:29	0	0	1	2	4	5	0	0	0	0	0	0	0	0	0	**12**
19:30 - 19:44	0	0	0	2	9	5	0	0	0	0	0	0	0	0	0	**16**
19:45 - 19:59	0	0	3	2	4	3	0	0	0	0	0	0	0	0	0	**12**
20:00 - 20:14	0	0	0	2	10	2	0	0	0	0	0	0	0	0	0	**14**
20:15 - 20:29	0	0	0	4	3	2	2	0	0	0	0	0	0	0	0	**11**
20:30 - 20:44	0	0	0	1	2	0	1	0	0	0	0	0	0	0	0	**4**
20:45 - 20:59	0	0	2	3	4	1	0	0	0	0	0	0	0	0	0	**10**
21:00 - 21:14	0	0	0	2	3	1	0	0	0	0	0	0	0	0	0	**6**
21:15 - 21:29	0	0	0	2	2	0	0	0	0	0	0	0	0	0	0	**4**
21:30 - 21:44	0	0	0	0	2	1	0	0	0	0	0	0	0	0	0	**3**
21:45 - 21:59	0	0	0	4	4	1	0	0	0	0	0	0	0	0	0	**9**
22:00 - 22:14	0	0	1	2	7	1	0	0	0	0	0	0	0	0	0	**11**
22:15 - 22:29	0	0	0	2	5	0	0	0	0	0	0	0	0	0	0	**7**
22:30 - 22:44	0	0	0	6	0	0	0	0	0	0	0	0	0	0	0	**6**
22:45 - 22:59	0	0	0	0	2	0	0	0	0	0	0	0	0	0	0	**2**
23:00 - 23:14	0	0	0	0	1	2	0	0	0	0	0	0	0	0	0	**3**
23:15 - 23:29	0	0	1	1	2	1	0	0	0	0	0	0	0	0	0	**5**
23:30 - 23:44	0	0	0	1	0	0	0	0	0	0	0	0	0	0	0	**1**
23:45 - 23:59	0	0	0	1	3	1	0	0	0	0	0	0	0	0	0	**5**
Totals	**0**	**8**	**46**	**186**	**506**	**291**	**45**	**1**	**2**	**0**	**0**	**0**	**0**	**0**	**0**	**1085**
Percent of Total	**0.0**	**0.7**	**4.2**	**17.1**	**46.6**	**26.8**	**4.1**	**0.1**	**0.2**	**0.0**	**0.0**	**0.0**	**0.0**	**0.0**	**0.0**	**100**
Percent of AM	**0.0**	**0.8**	**3.4**	**13.0**	**46.8**	**30.4**	**5.2**	**0.0**	**0.4**	**0.0**	**0.0**	**0.0**	**0.0**	**0.0**	**0.0**	**100**
Percent of PM	**0.0**	**0.7**	**5.0**	**20.7**	**46.5**	**23.8**	**3.2**	**0.2**	**0.0**	**0.0**	**0.0**	**0.0**	**0.0**	**0.0**	**0.0**	**100**

Daily Eastbound Speeds (MPH)

Study Date: Wednesday, 09/19/2018
Unit ID: 0168
Location: SW 21ST ST / E OF SW 70TH AV

Standard Deviation:	5.0 MPH	Ten Mile Pace:	20 to 29 MPH	85th Percentile:	28.6 MPH
Mean Speed:	23.4 MPH	Percent in Ten Mile Pace:	73.5%	15th Percentile:	18.5 MPH
Median Speed:	23.6 MPH			90th Percentile:	29.7 MPH
Modal Speed:	23.0 MPH			95th Percentile:	30.9 MPH

Daily Eastbound Speeds (MPH)

Study Date: Thursday, 09/20/2018
Unit ID: 0168
Location: SW 21ST ST / E OF SW 70TH AV

	0-5	5-10	10-15	15-20	20-25	25-30	30-35	35-40	40-45	45-50	50-55	55-60	60-65	65-70	70-75	Total
00:00 - 00:14	0	0	0	1	2	1	0	0	0	0	0	0	0	0	0	**4**
00:15 - 00:29	0	0	0	1	1	0	0	0	0	0	0	0	0	0	0	**2**
00:30 - 00:44	0	0	0	0	0	0	0	0	0	0	0	0	0	0	0	**0**
00:45 - 00:59	0	0	0	0	0	0	0	0	0	0	0	0	0	0	0	**0**
01:00 - 01:14	0	0	0	0	1	0	0	0	0	0	0	0	0	0	0	**1**
01:15 - 01:29	0	0	0	1	0	0	0	0	0	0	0	0	0	0	0	**1**
01:30 - 01:44	0	0	0	0	1	0	0	0	0	0	0	0	0	0	0	**1**
01:45 - 01:59	0	0	0	0	2	0	0	0	0	0	0	0	0	0	0	**2**
02:00 - 02:14	0	0	0	0	1	0	0	0	0	0	0	0	0	0	0	**1**
02:15 - 02:29	0	0	1	0	2	1	0	0	0	0	0	0	0	0	0	**4**
02:30 - 02:44	0	0	0	0	0	1	0	0	0	0	0	0	0	0	0	**1**
02:45 - 02:59	0	0	0	0	0	0	0	0	0	0	0	0	0	0	0	**0**
03:00 - 03:14	0	0	0	0	0	0	0	0	0	0	0	0	0	0	0	**0**
03:15 - 03:29	0	0	0	0	1	0	0	0	0	0	0	0	0	0	0	**1**
03:30 - 03:44	0	0	0	0	0	0	0	0	0	0	0	0	0	0	0	**0**
03:45 - 03:59	0	0	0	0	0	0	0	0	0	0	0	0	0	0	0	**0**
04:00 - 04:14	0	0	0	0	1	0	1	0	0	0	0	0	0	0	0	**2**
04:15 - 04:29	0	0	0	1	0	0	0	0	0	0	0	0	0	0	0	**1**
04:30 - 04:44	0	0	0	0	0	0	0	0	0	0	0	0	0	0	0	**0**
04:45 - 04:59	0	0	0	0	1	0	0	0	0	0	0	0	0	0	0	**1**
05:00 - 05:14	0	0	0	0	1	0	0	0	0	0	0	0	0	0	0	**1**
05:15 - 05:29	0	0	0	0	1	1	0	0	0	0	0	0	0	0	0	**2**
05:30 - 05:44	0	0	0	0	3	3	0	0	0	0	0	0	0	0	0	**6**
05:45 - 05:59	0	0	0	0	1	2	1	0	0	0	0	0	0	0	0	**4**
06:00 - 06:14	0	0	0	0	5	3	1	0	0	0	0	0	0	0	0	**9**
06:15 - 06:29	0	0	0	3	4	1	0	1	0	0	0	0	0	0	0	**9**
06:30 - 06:44	0	0	0	0	3	2	0	0	0	0	0	0	0	0	0	**5**
06:45 - 06:59	0	0	0	0	9	6	2	0	0	0	0	0	0	0	0	**17**
07:00 - 07:14	0	0	1	2	6	10	1	1	0	0	0	0	0	0	0	**21**
07:15 - 07:29	0	0	1	2	14	7	1	0	0	0	0	0	0	0	0	**25**
07:30 - 07:44	0	1	1	3	20	11	3	1	0	0	0	0	0	0	0	**40**
07:45 - 07:59	0	0	2	1	22	16	7	0	0	0	0	0	0	0	0	**48**
08:00 - 08:14	0	0	2	3	16	13	5	0	0	0	0	0	0	0	0	**39**
08:15 - 08:29	0	0	0	1	11	17	5	0	0	0	0	0	0	0	0	**34**
08:30 - 08:44	1	0	1	3	23	14	3	0	0	0	0	0	0	0	0	**45**
08:45 - 08:59	0	0	4	1	17	17	1	0	0	0	0	0	0	0	0	**40**
09:00 - 09:14	0	1	1	5	7	13	2	0	0	0	0	0	0	0	0	**29**
09:15 - 09:29	0	0	0	2	8	6	4	1	0	0	0	0	0	0	0	**21**
09:30 - 09:44	0	0	0	0	10	9	1	0	0	0	0	0	0	0	0	**20**
09:45 - 09:59	0	1	0	2	8	2	1	0	0	0	0	0	0	0	0	**14**
10:00 - 10:14	0	0	0	2	10	4	2	1	0	0	0	0	0	0	0	**19**
10:15 - 10:29	0	0	1	1	7	4	3	0	0	0	0	0	0	0	0	**16**
10:30 - 10:44	0	0	1	2	7	4	2	0	0	0	0	0	0	0	0	**16**
10:45 - 10:59	0	0	0	3	4	1	0	0	0	0	0	0	0	0	0	**8**
11:00 - 11:14	0	0	0	1	2	3	0	0	0	0	0	0	0	0	0	**6**
11:15 - 11:29	0	0	0	1	8	2	0	0	0	0	0	0	0	0	0	**11**
11:30 - 11:44	0	0	1	3	5	4	1	0	0	0	0	0	0	0	0	**14**
11:45 - 11:59	0	1	0	4	8	6	0	0	0	0	0	0	0	0	0	**19**
12:00 - 12:14	0	1	0	2	12	1	2	0	0	0	0	0	0	0	0	**18**
12:15 - 12:29	0	0	0	3	8	5	1	0	0	0	0	0	0	0	0	**17**
12:30 - 12:44	0	0	0	3	14	2	0	0	0	0	0	0	0	0	0	**19**

Daily Eastbound Speeds (MPH)

Study Date: Thursday, 09/20/2018
Unit ID: 0168
Location: SW 21ST ST / E OF SW 70TH AV

	0-5	5-10	10-15	15-20	20-25	25-30	30-35	35-40	40-45	45-50	50-55	55-60	60-65	65-70	70-75	Total
12:45 - 12:59	0	0	0	5	4	2	2	0	0	0	0	0	0	0	0	**13**
13:00 - 13:14	0	0	1	1	7	1	1	0	0	0	0	0	0	0	0	**11**
13:15 - 13:29	0	0	0	0	2	7	0	0	0	0	0	0	0	0	0	**9**
13:30 - 13:44	0	0	0	3	3	4	0	0	0	0	0	0	0	0	0	**10**
13:45 - 13:59	0	0	1	1	6	0	0	0	0	0	0	0	0	0	0	**8**
14:00 - 14:14	0	0	0	4	10	1	0	0	0	0	0	0	0	0	0	**15**
14:15 - 14:29	0	0	1	6	13	5	0	0	0	0	0	0	0	0	0	**25**
14:30 - 14:44	0	0	0	3	2	2	0	0	0	0	0	0	0	0	0	**7**
14:45 - 14:59	0	0	1	1	7	1	1	0	0	0	0	0	0	0	0	**11**
15:00 - 15:14	0	0	1	1	10	5	0	0	0	0	0	0	0	0	0	**17**
15:15 - 15:29	0	0	0	7	12	4	1	0	0	0	0	0	0	0	0	**24**
15:30 - 15:44	0	0	0	3	2	0	0	0	0	0	0	0	0	0	0	**5**
15:45 - 15:59	0	0	0	2	4	4	1	0	0	0	0	0	0	0	0	**11**
16:00 - 16:14	0	0	0	4	8	4	2	0	0	0	0	0	0	0	0	**18**
16:15 - 16:29	0	1	3	4	9	8	0	0	0	0	0	0	0	0	0	**25**
16:30 - 16:44	0	0	0	1	12	4	0	1	0	0	0	0	0	0	0	**18**
16:45 - 16:59	0	0	0	3	6	4	2	0	0	0	0	0	0	0	0	**15**
17:00 - 17:14	0	0	0	2	11	5	1	0	0	0	0	0	0	0	0	**19**
17:15 - 17:29	0	0	0	1	6	5	1	0	0	0	0	0	0	0	0	**13**
17:30 - 17:44	0	0	0	1	10	5	0	0	0	0	0	0	0	0	0	**16**
17:45 - 17:59	0	0	2	1	19	3	1	0	0	0	0	0	0	0	0	**26**
18:00 - 18:14	0	0	0	2	10	6	0	0	0	0	0	0	0	0	0	**18**
18:15 - 18:29	0	0	2	4	5	1	0	0	0	0	0	0	0	0	0	**12**
18:30 - 18:44	0	0	0	1	4	4	1	0	0	0	0	0	0	0	0	**10**
18:45 - 18:59	0	0	2	2	8	8	0	0	0	0	0	0	0	0	0	**20**
19:00 - 19:14	0	0	2	2	7	9	0	0	0	0	0	0	0	0	0	**20**
19:15 - 19:29	0	0	0	1	5	2	0	0	0	0	0	0	0	0	0	**8**
19:30 - 19:44	0	1	0	1	4	5	1	0	0	0	0	0	0	0	0	**12**
19:45 - 19:59	0	0	1	2	7	3	0	0	0	0	0	0	0	0	0	**13**
20:00 - 20:14	0	0	0	0	10	1	1	0	0	0	0	0	0	0	0	**12**
20:15 - 20:29	0	0	0	2	4	1	0	0	0	0	0	0	0	0	0	**7**
20:30 - 20:44	0	0	0	3	5	4	0	0	0	0	0	0	0	0	0	**12**
20:45 - 20:59	0	0	2	4	8	4	1	0	0	0	0	0	0	0	0	**19**
21:00 - 21:14	0	0	0	1	5	1	0	0	0	0	0	0	0	0	0	**7**
21:15 - 21:29	0	0	0	3	4	2	0	0	0	0	0	0	0	0	0	**9**
21:30 - 21:44	0	0	0	1	4	0	0	0	0	0	0	0	0	0	0	**5**
21:45 - 21:59	0	0	1	1	5	0	0	0	0	0	0	0	0	0	0	**7**
22:00 - 22:14	0	0	0	2	2	0	1	0	0	0	0	0	0	0	0	**5**
22:15 - 22:29	0	0	0	5	2	0	0	1	0	0	0	0	0	0	0	**8**
22:30 - 22:44	0	0	0	2	2	1	0	0	0	0	0	0	0	0	0	**5**
22:45 - 22:59	0	0	0	2	1	0	0	0	0	0	0	0	0	0	0	**3**
23:00 - 23:14	0	0	0	1	2	0	0	0	0	0	0	0	0	0	0	**3**
23:15 - 23:29	0	0	1	1	1	1	0	0	0	0	0	0	0	0	0	**4**
23:30 - 23:44	0	0	0	1	2	0	1	0	0	0	0	0	0	0	0	**4**
23:45 - 23:59	0	0	0	0	1	0	0	0	0	0	0	0	0	0	0	**1**
Totals	**1**	**7**	**38**	**155**	**558**	**319**	**69**	**7**	**0**	**0**	**0**	**0**	**0**	**0**	**0**	**1154**
Percent of Total	**0.1**	**0.6**	**3.3**	**13.4**	**48.4**	**27.6**	**6.0**	**0.6**	**0.0**	**0.0**	**0.0**	**0.0**	**0.0**	**0.0**	**0.0**	**100**
Percent of AM	**0.2**	**0.7**	**3.0**	**8.8**	**45.2**	**32.9**	**8.4**	**0.9**	**0.0**	**0.0**	**0.0**	**0.0**	**0.0**	**0.0**	**0.0**	**100**
Percent of PM	**0.0**	**0.5**	**3.5**	**17.8**	**51.3**	**22.7**	**3.7**	**0.3**	**0.0**	**0.0**	**0.0**	**0.0**	**0.0**	**0.0**	**0.0**	**100**

Daily Eastbound Speeds (MPH)

Study Date: Thursday, 09/20/2018
Unit ID: 0168
Location: SW 21ST ST / E OF SW 70TH AV

Standard Deviation:	5.0 MPH	Ten Mile Pace:	20 to 29 MPH	85th Percentile:	29.2 MPH
Mean Speed:	24.0 MPH	Percent in Ten Mile Pace:	76.0%	15th Percentile:	19.9 MPH
Median Speed:	24.0 MPH			90th Percentile:	30.2 MPH
Modal Speed:	23.0 MPH			95th Percentile:	31.5 MPH

Daily Westbound Speeds (MPH)

Study Date: Tuesday, 09/18/2018
Unit ID: 0170
Location: SW 21ST ST / E OF SW 70TH AV

	0-5	5-10	10-15	15-20	20-25	25-30	30-35	35-40	40-45	45-50	50-55	55-60	60-65	65-70	70-75	Total
00:00 - 00:14	0	0	0	0	0	1	0	0	0	0	0	0	0	0	0	**1**
00:15 - 00:29	0	0	0	0	0	1	3	0	0	0	0	0	0	0	0	**4**
00:30 - 00:44	0	0	0	0	0	0	2	0	0	0	0	0	0	0	0	**2**
00:45 - 00:59	0	0	0	0	1	0	0	0	0	0	0	0	0	0	0	**1**
01:00 - 01:14	0	0	0	0	0	0	0	0	0	0	0	0	0	0	0	**0**
01:15 - 01:29	0	0	0	0	0	1	0	0	0	0	0	0	0	0	0	**1**
01:30 - 01:44	0	0	0	0	0	0	0	0	0	0	0	0	0	0	0	**0**
01:45 - 01:59	0	0	0	0	0	0	0	0	0	0	0	0	0	0	0	**0**
02:00 - 02:14	0	0	0	0	0	0	0	0	0	0	0	0	0	0	0	**0**
02:15 - 02:29	0	0	0	1	0	1	0	0	0	0	0	0	0	0	0	**2**
02:30 - 02:44	0	0	0	0	0	0	0	0	0	0	0	0	0	0	0	**0**
02:45 - 02:59	0	0	0	0	0	0	0	0	0	0	0	0	0	0	0	**0**
03:00 - 03:14	0	0	0	0	0	0	0	0	0	0	0	0	0	0	0	**0**
03:15 - 03:29	0	0	0	0	0	1	0	0	0	0	0	0	0	0	0	**1**
03:30 - 03:44	0	0	0	0	0	0	0	0	0	0	0	0	0	0	0	**0**
03:45 - 03:59	0	0	0	0	0	1	0	0	0	0	0	0	0	0	0	**1**
04:00 - 04:14	0	0	0	1	0	0	0	0	0	0	0	0	0	0	0	**1**
04:15 - 04:29	0	0	0	0	1	0	0	0	0	0	0	0	0	0	0	**1**
04:30 - 04:44	0	0	0	0	0	0	1	0	0	0	0	0	0	0	0	**1**
04:45 - 04:59	0	0	0	0	0	0	0	0	0	0	0	0	0	0	0	**0**
05:00 - 05:14	0	0	0	0	0	1	0	1	0	0	0	0	0	0	0	**2**
05:15 - 05:29	0	0	0	1	0	0	2	0	0	0	0	0	0	0	0	**3**
05:30 - 05:44	0	0	0	1	0	1	0	0	0	0	0	0	0	0	0	**2**
05:45 - 05:59	0	0	0	1	2	1	0	0	0	0	0	0	0	0	0	**4**
06:00 - 06:14	0	0	1	2	1	2	1	0	0	0	0	0	0	0	0	**7**
06:15 - 06:29	0	0	0	0	5	1	2	0	0	0	0	0	0	0	0	**8**
06:30 - 06:44	0	0	0	4	5	4	2	0	0	0	0	0	0	0	0	**15**
06:45 - 06:59	0	1	0	0	5	3	3	1	0	0	0	0	0	0	0	**13**
07:00 - 07:14	0	0	2	0	4	1	1	0	0	0	0	0	0	0	0	**8**
07:15 - 07:29	0	1	0	2	4	3	2	0	0	0	0	0	0	0	0	**12**
07:30 - 07:44	0	0	1	0	4	4	2	0	0	0	0	0	0	0	0	**11**
07:45 - 07:59	0	0	1	2	4	5	2	0	0	1	0	0	0	0	0	**15**
08:00 - 08:14	0	0	1	2	3	7	3	3	0	0	0	0	0	0	0	**19**
08:15 - 08:29	0	0	0	4	6	8	3	1	1	0	0	0	0	0	0	**23**
08:30 - 08:44	0	0	0	1	7	9	2	0	0	0	0	0	0	0	0	**19**
08:45 - 08:59	0	0	1	2	5	6	3	2	0	0	0	0	0	0	0	**19**
09:00 - 09:14	0	0	0	1	4	3	2	2	0	0	0	0	0	0	0	**12**
09:15 - 09:29	0	0	0	2	3	5	0	0	1	0	0	0	0	0	0	**11**
09:30 - 09:44	0	0	0	0	5	5	4	0	1	0	0	0	0	0	0	**15**
09:45 - 09:59	0	0	0	1	2	7	3	1	0	0	0	0	0	0	0	**14**
10:00 - 10:14	0	0	0	4	6	2	2	1	0	0	0	0	0	0	0	**15**
10:15 - 10:29	0	0	0	2	3	3	2	0	0	0	0	0	0	0	0	**10**
10:30 - 10:44	0	0	0	1	1	1	2	1	0	0	0	0	0	0	0	**6**
10:45 - 10:59	0	0	0	1	4	4	0	1	0	0	0	0	0	0	0	**10**
11:00 - 11:14	0	0	0	1	6	1	2	0	0	0	0	0	0	0	0	**10**
11:15 - 11:29	0	0	1	3	1	0	2	0	0	0	0	0	0	0	0	**7**
11:30 - 11:44	0	0	0	0	3	3	2	1	1	0	0	0	0	0	0	**10**
11:45 - 11:59	0	0	0	3	1	4	3	0	0	0	0	0	0	0	0	**11**
12:00 - 12:14	0	0	0	1	3	5	2	2	0	0	0	0	0	0	0	**13**
12:15 - 12:29	0	1	0	0	3	2	1	0	0	0	0	0	0	0	0	**7**
12:30 - 12:44	0	0	0	1	2	3	2	1	0	0	0	0	0	0	0	**9**

Daily Westbound Speeds (MPH)

Study Date: Tuesday, 09/18/2018
Unit ID: 0170
Location: SW 21ST ST / E OF SW 70TH AV

	0-5	5-10	10-15	15-20	20-25	25-30	30-35	35-40	40-45	45-50	50-55	55-60	60-65	65-70	70-75	Total
12:45 - 12:59	0	0	1	4	6	6	2	1	0	0	0	0	0	0	0	**20**
13:00 - 13:14	0	0	0	0	5	6	3	1	0	0	0	0	0	0	0	**15**
13:15 - 13:29	0	1	0	4	4	7	2	1	0	0	0	0	0	0	0	**19**
13:30 - 13:44	0	1	1	1	2	3	3	1	0	0	0	0	0	0	0	**12**
13:45 - 13:59	0	0	0	1	4	5	4	1	0	0	0	0	0	0	0	**15**
14:00 - 14:14	0	0	4	3	5	9	3	0	0	0	0	0	0	0	0	**24**
14:15 - 14:29	0	0	0	1	3	7	2	0	1	0	0	0	0	0	0	**14**
14:30 - 14:44	0	0	0	1	6	6	4	1	1	0	0	0	0	0	0	**19**
14:45 - 14:59	0	0	1	1	10	9	2	4	1	1	0	0	0	0	0	**29**
15:00 - 15:14	0	0	0	0	4	6	7	2	0	0	0	0	0	0	0	**19**
15:15 - 15:29	0	0	0	2	12	4	6	1	0	0	0	0	0	0	0	**25**
15:30 - 15:44	0	0	1	8	12	8	5	1	0	0	0	0	0	0	0	**35**
15:45 - 15:59	0	0	0	5	9	12	6	0	0	0	0	0	0	0	0	**32**
16:00 - 16:14	0	0	0	2	6	17	2	1	0	0	0	0	0	0	0	**28**
16:15 - 16:29	0	0	2	2	15	11	4	1	0	0	0	0	0	0	0	**35**
16:30 - 16:44	0	0	1	1	13	18	11	1	0	0	0	0	0	0	0	**45**
16:45 - 16:59	0	0	0	1	11	24	10	3	1	0	0	0	0	0	0	**50**
17:00 - 17:14	0	0	3	4	22	29	17	0	1	0	0	0	0	0	0	**76**
17:15 - 17:29	0	0	7	9	19	27	4	1	0	0	0	0	0	0	0	**67**
17:30 - 17:44	0	0	1	3	16	16	10	3	0	0	0	0	0	0	0	**49**
17:45 - 17:59	0	0	1	4	23	32	11	2	0	0	0	0	0	0	0	**73**
18:00 - 18:14	0	1	0	4	19	21	11	2	0	0	0	0	0	0	0	**58**
18:15 - 18:29	0	0	0	2	30	20	12	1	1	0	0	0	0	0	0	**66**
18:30 - 18:44	0	0	0	3	19	16	7	2	1	0	0	0	0	0	0	**48**
18:45 - 18:59	0	0	0	3	12	17	2	1	0	0	0	0	0	0	0	**35**
19:00 - 19:14	0	1	0	1	4	7	4	0	0	0	0	0	0	0	0	**17**
19:15 - 19:29	0	0	0	1	0	3	2	0	0	0	0	0	0	0	0	**6**
19:30 - 19:44	0	0	0	2	3	8	6	0	1	0	0	0	0	0	0	**20**
19:45 - 19:59	0	0	0	3	4	2	1	0	0	0	0	0	0	0	0	**10**
20:00 - 20:14	0	0	0	0	5	0	1	0	0	0	0	0	0	0	0	**6**
20:15 - 20:29	0	0	1	2	5	3	1	0	0	0	0	0	0	0	0	**12**
20:30 - 20:44	0	0	1	0	3	3	1	0	0	0	0	0	0	0	0	**8**
20:45 - 20:59	0	0	2	1	2	7	1	0	0	0	0	0	0	0	0	**13**
21:00 - 21:14	0	0	0	6	1	3	2	0	0	0	0	0	0	0	0	**12**
21:15 - 21:29	0	0	0	1	4	3	0	0	0	0	0	0	0	0	0	**8**
21:30 - 21:44	0	0	0	0	2	3	1	0	0	0	0	0	0	0	0	**6**
21:45 - 21:59	0	0	1	1	5	5	1	0	0	0	0	0	0	0	0	**13**
22:00 - 22:14	0	0	0	0	2	2	0	0	0	0	0	0	0	0	0	**4**
22:15 - 22:29	0	0	0	3	2	0	1	0	0	0	0	0	0	0	0	**6**
22:30 - 22:44	0	0	0	0	0	0	1	0	0	0	0	0	0	0	0	**1**
22:45 - 22:59	0	0	0	0	0	1	1	0	0	0	0	0	0	0	0	**2**
23:00 - 23:14	0	0	0	0	0	0	0	0	1	0	0	0	0	0	0	**1**
23:15 - 23:29	0	0	0	1	4	0	1	0	1	0	0	0	0	0	0	**7**
23:30 - 23:44	0	0	0	0	3	1	0	0	0	0	0	0	0	0	0	**4**
23:45 - 23:59	0	0	0	0	1	1	0	1	0	0	0	0	0	0	0	**3**
Totals	**0**	**7**	**36**	**136**	**441**	**498**	**238**	**51**	**14**	**2**	**0**	**0**	**0**	**0**	**0**	**1423**
Percent of Total	**0.0**	**0.5**	**2.5**	**9.6**	**31.0**	**35.0**	**16.7**	**3.6**	**1.0**	**0.1**	**0.0**	**0.0**	**0.0**	**0.0**	**0.0**	**100**
Percent of AM	**0.0**	**0.6**	**2.4**	**13.1**	**29.4**	**30.6**	**17.7**	**4.6**	**1.2**	**0.3**	**0.0**	**0.0**	**0.0**	**0.0**	**0.0**	**100**
Percent of PM	**0.0**	**0.5**	**2.6**	**8.5**	**31.5**	**36.3**	**16.4**	**3.3**	**0.9**	**0.1**	**0.0**	**0.0**	**0.0**	**0.0**	**0.0**	**100**

Daily Westbound Speeds (MPH)

Study Date: Tuesday, 09/18/2018
Unit ID: 0170
Location: SW 21ST ST / E OF SW 70TH AV

Standard Deviation:	6.0 MPH	Ten Mile Pace:	20 to 29 MPH	85th Percentile:	32.3 MPH
Mean Speed:	26.4 MPH	Percent in Ten Mile Pace:	66.0%	15th Percentile:	20.5 MPH
Median Speed:	26.1 MPH			90th Percentile:	34.1 MPH
Modal Speed:	28.0 MPH			95th Percentile:	35.9 MPH

Daily Westbound Speeds (MPH)

Study Date: Wednesday, 09/19/2018
Unit ID: 0170
Location: SW 21ST ST / E OF SW 70TH AV

	0-5	5-10	10-15	15-20	20-25	25-30	30-35	35-40	40-45	45-50	50-55	55-60	60-65	65-70	70-75	Total
00:00 - 00:14	0	0	0	0	1	0	2	0	0	0	0	0	0	0	0	**3**
00:15 - 00:29	0	0	0	0	0	1	0	0	0	0	0	0	0	0	0	**1**
00:30 - 00:44	0	0	0	0	0	1	0	0	0	0	0	0	0	0	0	**1**
00:45 - 00:59	0	0	0	0	0	1	0	0	0	0	0	0	0	0	0	**1**
01:00 - 01:14	0	0	1	0	0	0	0	0	0	0	0	0	0	0	0	**1**
01:15 - 01:29	0	0	0	0	0	0	0	0	0	0	0	0	0	0	0	**0**
01:30 - 01:44	0	0	0	0	0	0	1	1	0	0	0	0	0	0	0	**2**
01:45 - 01:59	0	0	0	0	0	0	0	0	0	0	0	0	0	0	0	**0**
02:00 - 02:14	0	0	0	0	0	0	0	0	0	0	0	0	0	0	0	**0**
02:15 - 02:29	0	0	0	0	1	0	1	0	0	0	0	0	0	0	0	**2**
02:30 - 02:44	0	0	1	0	0	0	0	0	0	0	1	0	0	0	0	**2**
02:45 - 02:59	0	0	0	0	0	0	0	0	0	0	0	0	0	0	0	**0**
03:00 - 03:14	0	0	0	0	0	0	0	0	0	0	0	0	0	0	0	**0**
03:15 - 03:29	0	0	0	0	0	0	0	0	0	0	0	0	0	0	0	**0**
03:30 - 03:44	0	0	0	0	0	0	0	0	0	0	0	0	0	0	0	**0**
03:45 - 03:59	0	0	0	0	0	0	0	0	0	0	0	0	0	0	0	**0**
04:00 - 04:14	0	0	0	0	0	0	0	0	0	0	0	0	0	0	0	**0**
04:15 - 04:29	0	0	0	1	0	1	0	0	0	0	0	0	0	0	0	**2**
04:30 - 04:44	0	0	1	0	0	0	0	0	0	0	0	0	0	0	0	**1**
04:45 - 04:59	0	0	0	0	0	0	0	1	0	0	0	0	0	0	0	**1**
05:00 - 05:14	0	0	0	0	0	2	0	0	0	0	0	0	0	0	0	**2**
05:15 - 05:29	0	0	0	0	0	0	0	0	0	0	1	0	0	0	0	**1**
05:30 - 05:44	0	0	0	0	0	0	0	0	0	0	0	0	0	0	0	**0**
05:45 - 05:59	0	0	0	1	1	1	1	0	0	0	0	0	0	0	0	**4**
06:00 - 06:14	0	0	1	0	0	0	0	0	0	1	0	0	0	0	0	**2**
06:15 - 06:29	0	0	0	2	2	2	0	0	0	0	0	0	0	0	0	**6**
06:30 - 06:44	0	0	1	1	2	2	0	0	0	0	0	0	0	0	0	**6**
06:45 - 06:59	0	0	0	0	2	2	0	1	0	0	0	0	0	0	0	**5**
07:00 - 07:14	0	0	1	0	1	5	1	1	0	0	0	0	0	0	0	**9**
07:15 - 07:29	0	0	1	3	3	3	0	0	0	0	0	0	0	0	0	**10**
07:30 - 07:44	0	0	0	1	5	6	3	0	0	0	0	0	0	0	0	**15**
07:45 - 07:59	0	0	1	2	3	2	0	1	0	0	0	0	0	0	0	**9**
08:00 - 08:14	0	0	0	2	4	11	1	2	0	0	0	0	0	0	0	**20**
08:15 - 08:29	0	0	0	3	5	2	2	3	0	0	0	0	0	0	0	**15**
08:30 - 08:44	0	0	0	1	7	3	2	2	1	0	0	0	0	0	0	**16**
08:45 - 08:59	0	0	0	4	10	1	1	0	0	0	0	0	0	0	0	**16**
09:00 - 09:14	0	0	0	1	3	2	1	1	1	0	0	0	0	0	0	**9**
09:15 - 09:29	0	0	0	4	3	1	1	1	0	0	0	0	0	0	0	**10**
09:30 - 09:44	0	1	0	2	2	4	4	2	0	0	0	0	0	0	0	**15**
09:45 - 09:59	0	0	0	2	4	7	2	0	0	0	0	0	0	0	0	**15**
10:00 - 10:14	0	0	0	1	3	2	1	0	0	0	0	0	0	0	0	**7**
10:15 - 10:29	0	0	0	0	0	7	2	1	0	0	0	0	0	0	0	**10**
10:30 - 10:44	0	1	1	1	1	3	2	0	0	0	0	0	0	0	0	**9**
10:45 - 10:59	0	1	0	1	1	3	2	0	0	0	0	0	0	0	0	**8**
11:00 - 11:14	0	0	0	2	2	5	4	2	0	0	0	0	0	0	0	**15**
11:15 - 11:29	0	0	0	2	3	6	0	1	0	0	0	0	0	0	0	**12**
11:30 - 11:44	0	0	1	1	3	4	1	1	1	0	0	0	0	0	0	**12**
11:45 - 11:59	0	0	2	0	4	5	2	0	0	0	0	0	0	0	0	**13**
12:00 - 12:14	0	0	1	0	3	6	2	0	0	0	0	0	0	0	0	**12**
12:15 - 12:29	0	0	0	1	4	7	1	2	1	0	0	0	0	0	0	**16**
12:30 - 12:44	0	0	0	2	11	3	2	3	0	0	0	0	0	0	0	**21**

Daily Westbound Speeds (MPH)

Study Date: Wednesday, 09/19/2018
Unit ID: 0170
Location: SW 21ST ST / E OF SW 70TH AV

	0-5	5-10	10-15	15-20	20-25	25-30	30-35	35-40	40-45	45-50	50-55	55-60	60-65	65-70	70-75	Total
12:45 - 12:59	0	0	0	4	10	9	7	0	0	0	0	0	0	0	0	**30**
13:00 - 13:14	0	0	0	0	6	2	5	1	1	0	0	0	0	0	0	**15**
13:15 - 13:29	0	0	1	0	1	8	0	1	0	0	0	0	0	0	0	**11**
13:30 - 13:44	0	0	1	5	0	4	3	2	0	0	0	0	0	0	0	**15**
13:45 - 13:59	0	0	1	1	2	5	1	2	0	0	0	0	0	0	0	**12**
14:00 - 14:14	0	0	0	3	7	8	1	0	1	0	0	0	0	0	0	**20**
14:15 - 14:29	0	0	0	2	6	4	2	0	0	1	0	0	0	0	0	**15**
14:30 - 14:44	0	0	0	0	3	7	3	1	0	0	0	0	0	0	0	**14**
14:45 - 14:59	0	0	2	2	11	5	2	1	0	0	0	0	0	0	0	**23**
15:00 - 15:14	0	0	0	1	2	5	2	0	1	0	0	0	0	0	0	**11**
15:15 - 15:29	0	0	0	0	10	6	2	0	0	0	0	0	0	0	0	**18**
15:30 - 15:44	0	1	0	1	8	3	2	3	0	0	0	0	0	0	0	**18**
15:45 - 15:59	0	0	0	3	9	10	3	1	0	0	0	0	0	0	0	**26**
16:00 - 16:14	0	0	0	4	15	9	2	0	0	0	0	0	0	0	0	**30**
16:15 - 16:29	0	0	1	5	13	4	5	0	0	0	0	0	0	0	0	**28**
16:30 - 16:44	0	0	2	1	11	10	10	1	0	0	0	0	0	0	0	**35**
16:45 - 16:59	0	0	1	2	16	9	3	2	0	0	0	0	0	0	0	**33**
17:00 - 17:14	0	0	0	6	21	15	5	1	0	0	0	0	0	0	0	**48**
17:15 - 17:29	0	0	0	8	20	17	10	0	0	0	0	0	0	0	0	**55**
17:30 - 17:44	0	0	0	5	10	16	9	3	1	0	0	0	0	0	0	**44**
17:45 - 17:59	0	0	2	3	13	13	5	0	0	0	0	0	0	0	0	**36**
18:00 - 18:14	0	0	0	2	15	14	6	1	0	0	0	0	0	0	0	**38**
18:15 - 18:29	0	0	0	3	15	13	3	2	0	0	0	0	0	0	0	**36**
18:30 - 18:44	0	0	1	1	17	13	4	4	0	0	0	0	0	0	0	**40**
18:45 - 18:59	0	0	0	8	5	16	2	0	0	1	0	0	0	0	0	**32**
19:00 - 19:14	0	0	0	0	6	6	1	1	0	0	0	0	0	0	0	**14**
19:15 - 19:29	0	0	0	1	6	10	7	0	0	0	0	0	0	0	0	**24**
19:30 - 19:44	0	0	0	6	9	11	0	0	0	0	0	0	0	0	0	**26**
19:45 - 19:59	0	0	0	2	3	6	1	0	0	0	0	0	0	0	0	**12**
20:00 - 20:14	0	0	1	0	3	2	2	0	0	0	0	0	0	0	0	**8**
20:15 - 20:29	0	1	1	1	2	1	1	0	0	0	0	0	0	0	0	**7**
20:30 - 20:44	0	0	0	3	6	1	0	0	0	0	0	0	0	0	0	**10**
20:45 - 20:59	0	0	1	3	5	3	0	1	0	0	0	0	0	0	0	**13**
21:00 - 21:14	0	0	0	2	5	4	0	0	0	0	0	0	0	0	0	**11**
21:15 - 21:29	0	0	0	2	3	1	1	0	0	0	0	0	0	0	0	**7**
21:30 - 21:44	0	0	0	2	3	2	2	1	0	0	0	0	0	0	0	**10**
21:45 - 21:59	0	0	0	0	2	1	0	0	0	0	0	0	0	0	0	**3**
22:00 - 22:14	0	0	1	0	4	2	1	0	0	0	0	0	0	0	0	**8**
22:15 - 22:29	0	0	0	2	2	2	0	0	0	0	0	0	0	0	0	**6**
22:30 - 22:44	0	0	1	2	0	2	0	0	0	0	0	0	0	0	0	**5**
22:45 - 22:59	0	0	0	0	2	1	1	0	0	0	0	0	0	0	0	**4**
23:00 - 23:14	0	0	0	1	0	1	0	0	0	0	0	0	0	0	0	**2**
23:15 - 23:29	0	0	0	0	0	0	1	0	0	0	0	0	0	0	0	**1**
23:30 - 23:44	0	0	0	0	1	0	1	0	0	0	0	0	0	0	0	**2**
23:45 - 23:59	0	0	0	0	0	0	1	0	0	0	0	0	0	0	0	**1**
Totals	**0**	**5**	**30**	**138**	**402**	**392**	**159**	**55**	**8**	**3**	**2**	**0**	**0**	**0**	**0**	**1194**
Percent of Total	**0.0**	**0.4**	**2.5**	**11.6**	**33.7**	**32.8**	**13.3**	**4.6**	**0.7**	**0.3**	**0.2**	**0.0**	**0.0**	**0.0**	**0.0**	**100**
Percent of AM	**0.0**	**1.0**	**4.2**	**13.2**	**26.4**	**33.0**	**12.8**	**7.3**	**1.0**	**0.3**	**0.7**	**0.0**	**0.0**	**0.0**	**0.0**	**100**
Percent of PM	**0.0**	**0.2**	**2.0**	**11.0**	**36.0**	**32.8**	**13.5**	**3.8**	**0.6**	**0.2**	**0.0**	**0.0**	**0.0**	**0.0**	**0.0**	**100**

Daily Westbound Speeds (MPH)

Study Date: Wednesday, 09/19/2018
Unit ID: 0170
Location: SW 21ST ST / E OF SW 70TH AV

Standard Deviation:	6.2 MPH	Ten Mile Pace:	20 to 29 MPH	85th Percentile:	31.8 MPH
Mean Speed:	26.0 MPH	Percent in Ten Mile Pace:	66.5%		
Median Speed:	25.3 MPH			15th Percentile:	20.1 MPH
Modal Speed:	23.0 MPH			90th Percentile:	34.0 MPH
				95th Percentile:	35.9 MPH

Daily Westbound Speeds (MPH)

Study Date: Thursday, 09/20/2018
Unit ID: 0170
Location: SW 21ST ST / E OF SW 70TH AV

	0-5	5-10	10-15	15-20	20-25	25-30	30-35	35-40	40-45	45-50	50-55	55-60	60-65	65-70	70-75	Total
00:00 - 00:14	0	0	0	0	0	0	0	0	0	0	0	0	0	0	0	**0**
00:15 - 00:29	0	0	1	0	0	0	0	0	0	0	0	0	0	0	0	**1**
00:30 - 00:44	0	0	0	0	0	0	0	0	0	0	0	0	0	0	0	**0**
00:45 - 00:59	0	0	0	0	0	0	0	0	0	0	0	0	0	0	0	**0**
01:00 - 01:14	0	0	0	0	0	0	0	0	0	0	0	0	0	0	0	**0**
01:15 - 01:29	0	0	0	0	0	0	0	0	0	0	0	0	0	0	0	**0**
01:30 - 01:44	0	0	0	0	0	0	0	1	0	0	0	0	0	0	0	**1**
01:45 - 01:59	0	0	0	0	0	2	0	0	0	0	0	0	0	0	0	**2**
02:00 - 02:14	0	0	0	0	0	0	0	0	0	0	0	0	0	0	0	**0**
02:15 - 02:29	0	0	0	0	0	0	0	0	0	0	0	0	0	0	0	**0**
02:30 - 02:44	0	0	0	0	0	0	1	0	0	0	0	0	0	0	0	**1**
02:45 - 02:59	0	0	0	0	0	0	0	0	0	0	0	0	0	0	0	**0**
03:00 - 03:14	0	0	0	0	0	0	0	0	0	0	0	0	0	0	0	**0**
03:15 - 03:29	0	0	0	0	1	0	0	0	0	0	0	0	0	0	0	**1**
03:30 - 03:44	0	0	0	0	0	0	0	0	0	0	0	0	0	0	0	**0**
03:45 - 03:59	0	0	0	0	0	0	0	0	0	0	0	0	0	0	0	**0**
04:00 - 04:14	0	0	0	0	0	0	0	0	0	0	0	0	0	0	0	**0**
04:15 - 04:29	0	0	0	0	2	0	0	0	0	0	0	0	0	0	0	**2**
04:30 - 04:44	0	0	0	0	1	0	0	0	0	0	0	0	0	0	0	**1**
04:45 - 04:59	0	0	1	0	0	1	0	0	0	0	0	0	0	0	0	**2**
05:00 - 05:14	0	0	0	0	0	1	0	0	0	0	0	0	0	0	0	**1**
05:15 - 05:29	0	0	0	0	0	0	0	1	1	0	0	0	0	0	0	**2**
05:30 - 05:44	0	0	0	1	1	1	0	0	0	0	0	0	0	0	0	**3**
05:45 - 05:59	0	0	0	1	1	0	2	0	0	0	0	0	0	0	0	**4**
06:00 - 06:14	0	0	0	1	1	1	0	0	0	0	0	0	0	0	0	**3**
06:15 - 06:29	0	0	1	0	1	4	0	0	0	0	0	0	0	0	0	**6**
06:30 - 06:44	0	1	2	2	7	2	1	0	0	0	0	0	0	0	0	**15**
06:45 - 06:59	0	0	0	1	0	5	0	0	0	0	0	0	0	0	0	**6**
07:00 - 07:14	0	0	0	1	3	4	3	1	0	0	0	0	0	0	0	**12**
07:15 - 07:29	0	0	0	1	6	2	1	1	0	0	0	0	0	0	0	**11**
07:30 - 07:44	0	1	0	1	5	5	0	0	0	1	0	0	0	0	0	**13**
07:45 - 07:59	0	0	0	2	5	6	0	0	0	0	0	0	0	0	0	**13**
08:00 - 08:14	0	0	0	3	11	6	4	0	0	1	0	0	0	0	0	**25**
08:15 - 08:29	0	0	0	4	9	11	4	0	0	0	0	0	0	0	0	**28**
08:30 - 08:44	0	0	3	4	5	7	0	1	0	0	0	0	0	0	0	**20**
08:45 - 08:59	0	0	0	2	5	5	1	2	0	0	0	0	0	0	0	**15**
09:00 - 09:14	0	1	0	2	10	0	0	0	1	0	0	0	0	0	0	**14**
09:15 - 09:29	0	0	0	0	2	3	1	0	0	0	0	0	0	0	0	**6**
09:30 - 09:44	0	0	0	0	2	2	2	0	0	0	0	0	0	0	0	**6**
09:45 - 09:59	0	0	0	0	3	5	2	1	2	0	0	0	0	0	0	**13**
10:00 - 10:14	0	0	1	0	4	4	0	0	0	0	0	0	0	0	0	**9**
10:15 - 10:29	0	0	1	1	3	6	0	0	0	0	0	0	0	0	0	**11**
10:30 - 10:44	0	0	0	2	8	3	2	0	0	0	0	0	0	0	0	**15**
10:45 - 10:59	0	0	0	2	5	1	0	0	0	0	0	0	0	0	0	**8**
11:00 - 11:14	0	0	1	1	1	2	1	0	0	0	0	0	0	0	0	**6**
11:15 - 11:29	0	0	1	1	3	4	3	1	0	0	0	0	0	0	0	**13**
11:30 - 11:44	0	0	0	0	3	5	3	0	0	0	0	0	0	0	0	**11**
11:45 - 11:59	0	0	1	0	7	4	1	0	0	0	0	0	0	0	0	**13**
12:00 - 12:14	0	0	0	1	1	3	0	0	0	0	0	0	0	0	0	**5**
12:15 - 12:29	0	0	0	2	6	2	0	2	0	0	0	0	0	0	0	**12**
12:30 - 12:44	0	0	0	2	4	9	1	0	0	0	0	0	0	0	0	**16**

Daily Westbound Speeds (MPH)

Study Date: Thursday, 09/20/2018
Unit ID: 0170
Location: SW 21ST ST / E OF SW 70TH AV

	0-5	5-10	10-15	15-20	20-25	25-30	30-35	35-40	40-45	45-50	50-55	55-60	60-65	65-70	70-75	Total
12:45 - 12:59	0	0	2	6	5	5	2	0	0	0	0	0	0	0	0	**20**
13:00 - 13:14	0	0	2	1	3	2	1	0	0	0	0	0	0	0	0	**9**
13:15 - 13:29	0	0	1	6	6	4	0	1	0	0	0	0	0	0	0	**18**
13:30 - 13:44	0	1	0	2	7	5	1	1	0	0	0	0	0	0	0	**17**
13:45 - 13:59	0	0	0	3	8	6	1	1	0	0	0	0	0	0	0	**19**
14:00 - 14:14	0	0	0	1	10	7	2	0	0	0	0	0	0	0	0	**20**
14:15 - 14:29	0	0	1	1	15	7	0	0	1	0	0	0	0	0	0	**25**
14:30 - 14:44	0	0	0	2	8	2	2	0	0	0	0	0	0	0	0	**14**
14:45 - 14:59	0	0	0	6	12	2	4	1	0	0	0	0	0	0	0	**25**
15:00 - 15:14	0	0	0	4	7	7	3	2	0	0	0	0	0	0	0	**23**
15:15 - 15:29	0	0	1	3	10	13	4	0	0	0	0	0	0	0	0	**31**
15:30 - 15:44	0	0	1	3	11	11	4	2	0	0	0	0	0	0	0	**32**
15:45 - 15:59	0	0	0	0	9	8	2	0	1	0	0	0	0	0	0	**20**
16:00 - 16:14	0	0	2	1	9	10	2	1	0	0	0	0	0	0	0	**25**
16:15 - 16:29	0	0	4	5	14	12	2	1	0	0	0	0	0	0	0	**38**
16:30 - 16:44	0	0	0	3	13	16	7	1	1	0	0	0	0	0	0	**41**
16:45 - 16:59	0	0	0	1	14	19	8	2	0	0	0	0	0	0	0	**44**
17:00 - 17:14	0	0	0	3	9	25	3	1	0	0	0	0	0	0	0	**41**
17:15 - 17:29	0	0	0	9	16	27	7	3	0	0	0	0	0	0	0	**62**
17:30 - 17:44	0	0	0	4	4	19	9	4	0	0	0	0	0	0	0	**40**
17:45 - 17:59	0	0	0	3	20	22	6	0	0	0	0	0	0	0	0	**51**
18:00 - 18:14	0	0	0	0	18	14	8	1	0	0	0	0	0	0	0	**41**
18:15 - 18:29	0	0	0	5	12	15	5	3	0	0	0	0	0	0	0	**40**
18:30 - 18:44	0	0	1	2	13	11	3	2	0	0	0	0	0	0	0	**32**
18:45 - 18:59	0	0	1	1	4	11	3	1	0	0	0	0	0	0	0	**21**
19:00 - 19:14	0	0	0	1	5	9	3	0	0	0	0	0	0	0	0	**18**
19:15 - 19:29	0	0	0	0	8	9	2	0	0	0	0	0	0	0	0	**19**
19:30 - 19:44	0	0	0	3	8	4	2	0	0	0	0	0	0	0	0	**17**
19:45 - 19:59	0	0	1	1	10	2	1	0	0	0	0	0	0	0	0	**15**
20:00 - 20:14	0	0	0	0	3	3	4	0	0	0	0	0	0	0	0	**10**
20:15 - 20:29	0	0	1	0	3	1	1	0	0	0	0	0	0	0	0	**6**
20:30 - 20:44	0	0	0	1	6	4	0	0	0	0	0	0	0	0	0	**11**
20:45 - 20:59	0	0	1	1	2	2	2	1	0	0	0	0	0	0	0	**9**
21:00 - 21:14	0	0	0	1	1	0	0	0	0	0	0	0	0	0	0	**2**
21:15 - 21:29	0	0	0	0	4	3	3	1	0	0	0	0	0	0	0	**11**
21:30 - 21:44	0	0	0	3	2	3	2	0	0	0	0	0	0	0	0	**10**
21:45 - 21:59	0	0	0	0	0	4	2	0	0	0	0	0	0	0	0	**6**
22:00 - 22:14	0	0	1	1	1	5	2	1	0	0	0	0	0	0	0	**11**
22:15 - 22:29	0	0	0	1	0	3	0	1	0	0	0	0	0	0	0	**5**
22:30 - 22:44	0	0	0	2	1	3	0	0	1	0	0	0	0	0	0	**7**
22:45 - 22:59	0	0	0	0	1	4	1	0	0	0	0	0	0	0	0	**6**
23:00 - 23:14	0	0	0	1	1	0	1	0	0	1	0	0	0	0	0	**4**
23:15 - 23:29	0	0	0	0	0	1	1	0	0	0	0	0	0	0	0	**2**
23:30 - 23:44	0	0	0	0	1	0	1	0	1	0	0	0	0	0	0	**3**
23:45 - 23:59	0	0	0	0	0	1	0	0	0	0	0	0	0	0	0	**1**
Totals	**0**	**4**	**33**	**129**	**440**	**457**	**150**	**43**	**9**	**3**	**0**	**0**	**0**	**0**	**0**	**1268**
Percent of Total	**0.0**	**0.3**	**2.6**	**10.2**	**34.7**	**36.0**	**11.8**	**3.4**	**0.7**	**0.2**	**0.0**	**0.0**	**0.0**	**0.0**	**0.0**	**100**
Percent of AM	**0.0**	**1.0**	**4.2**	**10.5**	**36.7**	**32.6**	**10.2**	**2.9**	**1.3**	**0.6**	**0.0**	**0.0**	**0.0**	**0.0**	**0.0**	**100**
Percent of PM	**0.0**	**0.1**	**2.1**	**10.1**	**34.0**	**37.2**	**12.4**	**3.6**	**0.5**	**0.1**	**0.0**	**0.0**	**0.0**	**0.0**	**0.0**	**100**

Daily Westbound Speeds (MPH)

Study Date: Thursday, 09/20/2018
Unit ID: 0170
Location: SW 21ST ST / E OF SW 70TH AV

Standard Deviation:	5.8 MPH	Ten Mile Pace:	20 to 29 MPH	85th Percentile:	30.6 MPH
Mean Speed:	25.9 MPH	Percent in Ten Mile Pace:	70.7%	15th Percentile:	20.3 MPH
Median Speed:	25.4 MPH			90th Percentile:	33.1 MPH
Modal Speed:	28.0 MPH			95th Percentile:	35.6 MPH

Daily Eastbound Speeds (MPH)

Study Date: Tuesday, 09/18/2018
Unit ID: 0161
Location: SW 16TH ST / E OF SW 70TH AV

	1-5	6-10	11-15	16-20	21-25	26-30	31-35	36-40	41-45	46-50	51-55	56-60	61-65	66-70	71-99	Total
00:00 - 00:14	0	0	0	0	0	1	0	1	0	0	0	0	0	0	0	**2**
00:15 - 00:29	0	0	0	0	1	1	1	0	0	0	0	0	0	0	0	**3**
00:30 - 00:44	0	0	0	0	0	1	1	0	0	0	0	0	0	0	0	**2**
00:45 - 00:59	0	0	0	0	3	1	0	1	0	0	0	0	0	0	0	**5**
01:00 - 01:14	0	0	0	1	1	0	0	1	1	0	0	0	0	0	0	**4**
01:15 - 01:29	0	0	0	1	0	0	2	0	0	0	0	0	0	0	0	**3**
01:30 - 01:44	0	0	0	0	0	0	0	0	0	0	0	0	0	0	0	**0**
01:45 - 01:59	0	0	0	0	0	0	1	0	0	0	0	0	0	0	0	**1**
02:00 - 02:14	0	0	0	0	0	0	1	0	0	0	0	0	0	0	0	**1**
02:15 - 02:29	0	0	0	0	1	0	0	0	0	0	0	0	0	0	0	**1**
02:30 - 02:44	0	0	0	0	0	0	0	0	0	0	0	0	0	0	0	**0**
02:45 - 02:59	0	0	0	0	0	0	0	0	0	0	0	0	0	0	0	**0**
03:00 - 03:14	0	0	0	0	0	0	0	0	0	0	1	0	0	0	0	**1**
03:15 - 03:29	0	0	0	0	2	0	0	0	0	0	0	0	0	0	0	**2**
03:30 - 03:44	0	0	0	0	0	0	0	0	0	0	0	0	0	0	0	**0**
03:45 - 03:59	0	0	0	0	0	1	0	0	0	0	0	0	0	0	0	**1**
04:00 - 04:14	0	0	0	0	1	0	0	0	0	0	0	0	0	0	0	**1**
04:15 - 04:29	0	0	0	0	3	0	0	0	0	0	0	0	0	0	0	**3**
04:30 - 04:44	0	0	0	1	0	0	0	2	0	0	0	0	0	0	0	**3**
04:45 - 04:59	0	0	0	0	0	0	1	0	1	0	0	0	0	0	0	**2**
05:00 - 05:14	0	0	0	0	0	0	1	0	0	0	0	0	0	0	0	**1**
05:15 - 05:29	0	1	0	1	6	1	2	2	0	0	0	0	0	0	0	**13**
05:30 - 05:44	0	0	0	3	7	1	2	0	3	0	0	0	0	0	0	**16**
05:45 - 05:59	0	0	0	1	1	3	3	0	1	0	0	0	0	0	0	**9**
06:00 - 06:14	0	0	0	3	6	6	3	1	0	0	0	0	0	0	0	**19**
06:15 - 06:29	0	0	0	3	11	12	8	1	0	1	0	0	0	0	0	**36**
06:30 - 06:44	0	0	0	4	12	16	6	5	0	0	0	0	0	0	0	**43**
06:45 - 06:59	0	0	2	7	26	4	7	3	2	0	0	0	0	0	0	**51**
07:00 - 07:14	0	0	3	13	32	17	8	2	0	0	0	0	0	0	0	**75**
07:15 - 07:29	0	0	1	9	50	11	14	1	0	0	0	0	0	0	0	**86**
07:30 - 07:44	1	1	2	13	32	17	10	0	0	0	0	0	0	0	0	**76**
07:45 - 07:59	0	0	3	21	54	29	6	1	0	0	0	0	0	0	0	**114**
08:00 - 08:14	0	0	0	14	39	22	13	4	0	1	0	0	0	0	0	**93**
08:15 - 08:29	0	1	0	18	68	25	8	0	1	0	0	0	0	0	0	**121**
08:30 - 08:44	0	2	2	12	51	26	13	5	1	0	0	0	0	0	0	**112**
08:45 - 08:59	0	2	2	24	63	26	11	4	1	0	0	0	0	0	0	**133**
09:00 - 09:14	0	0	0	15	31	22	5	5	2	0	0	0	0	0	0	**80**
09:15 - 09:29	0	0	2	11	39	13	10	0	1	0	0	0	0	0	0	**76**
09:30 - 09:44	1	0	3	19	36	16	2	1	0	0	0	0	0	0	0	**78**
09:45 - 09:59	0	0	0	10	27	15	9	5	0	0	0	0	0	0	1	**67**
10:00 - 10:14	1	0	0	6	37	10	3	2	2	0	0	0	0	0	0	**61**
10:15 - 10:29	0	0	1	12	8	14	6	0	2	0	0	0	0	0	0	**43**
10:30 - 10:44	1	0	0	8	18	8	6	1	2	0	0	0	0	0	0	**44**
10:45 - 10:59	0	0	0	4	12	13	6	1	1	0	0	0	0	0	0	**37**
11:00 - 11:14	0	0	2	11	15	9	4	5	0	0	0	0	0	0	0	**46**
11:15 - 11:29	0	0	1	8	10	14	4	1	0	0	0	0	0	0	0	**38**
11:30 - 11:44	0	0	1	8	14	10	6	3	0	1	0	0	0	0	0	**43**
11:45 - 11:59	0	0	0	8	32	8	5	1	0	0	0	0	0	0	0	**54**
12:00 - 12:14	1	0	0	5	16	6	10	3	0	0	0	0	0	0	0	**41**
12:15 - 12:29	0	0	4	5	16	8	0	1	0	1	0	0	1	0	0	**36**
12:30 - 12:44	0	0	0	9	21	12	1	2	0	0	0	0	0	0	0	**45**

Printed: 10/04/2018 at 13:50
TrafficViewer Pro v1.6.4.124
PicoCount 2500 V2.40 (s/n# 17032237)

Daily Eastbound Speeds (MPH)

Study Date: Tuesday, 09/18/2018
Unit ID: 0161
Location: SW 16TH ST / E OF SW 70TH AV

	1-5	6-10	11-15	16-20	21-25	26-30	31-35	36-40	41-45	46-50	51-55	56-60	61-65	66-70	71-99	Total
12:45 - 12:59	0	0	4	3	19	17	4	2	2	0	0	0	0	0	1	**52**
13:00 - 13:14	0	0	1	11	17	8	3	2	1	0	0	0	0	0	0	**43**
13:15 - 13:29	0	0	0	7	13	10	6	3	1	0	0	0	0	0	0	**40**
13:30 - 13:44	0	0	4	5	28	12	6	3	0	0	0	0	0	0	0	**58**
13:45 - 13:59	0	0	5	9	23	8	1	2	0	0	0	0	0	0	0	**48**
14:00 - 14:14	0	0	2	7	31	7	8	3	0	0	0	0	0	0	0	**58**
14:15 - 14:29	0	0	0	8	21	7	1	3	3	1	0	0	0	0	0	**44**
14:30 - 14:44	0	2	0	6	20	13	7	4	0	1	0	0	0	0	0	**53**
14:45 - 14:59	0	0	2	9	30	2	5	3	1	0	0	0	0	0	0	**52**
15:00 - 15:14	0	0	1	9	24	15	7	5	4	0	0	0	0	0	0	**65**
15:15 - 15:29	1	1	0	12	32	10	10	1	0	0	0	0	0	0	0	**67**
15:30 - 15:44	0	0	1	9	21	12	7	3	0	0	0	0	0	0	0	**53**
15:45 - 15:59	1	4	1	11	16	16	4	8	1	0	1	0	0	0	0	**63**
16:00 - 16:14	0	1	0	11	34	17	7	1	0	0	0	0	0	0	0	**71**
16:15 - 16:29	0	1	1	7	16	6	6	2	1	0	0	0	0	0	0	**40**
16:30 - 16:44	3	2	0	4	18	8	4	3	0	1	0	0	0	0	0	**43**
16:45 - 16:59	0	0	2	7	24	9	8	3	1	0	2	0	0	0	0	**56**
17:00 - 17:14	0	1	2	11	18	11	4	2	0	0	0	0	0	0	0	**49**
17:15 - 17:29	1	0	4	19	16	7	2	4	0	0	0	0	0	0	1	**54**
17:30 - 17:44	9	2	0	8	32	5	4	1	1	0	0	0	0	0	0	**62**
17:45 - 17:59	0	1	0	9	22	8	3	2	2	0	0	1	0	0	0	**48**
18:00 - 18:14	0	0	1	3	15	14	7	2	0	0	1	0	0	0	0	**43**
18:15 - 18:29	3	2	3	9	17	14	4	5	0	0	0	0	0	0	0	**57**
18:30 - 18:44	0	1	0	5	27	11	5	2	0	0	0	0	0	0	0	**51**
18:45 - 18:59	1	1	0	11	7	11	3	0	0	0	0	0	0	0	0	**34**
19:00 - 19:14	2	0	4	18	20	8	2	0	0	0	0	0	0	0	0	**54**
19:15 - 19:29	0	0	1	12	21	9	8	2	0	0	0	0	0	0	0	**53**
19:30 - 19:44	0	0	0	4	20	13	3	1	0	0	0	0	0	0	0	**41**
19:45 - 19:59	0	1	0	10	20	5	6	1	0	0	0	0	0	0	0	**43**
20:00 - 20:14	0	1	0	7	24	9	7	2	0	0	1	0	0	0	0	**51**
20:15 - 20:29	0	0	0	4	18	7	1	2	0	0	0	0	0	0	0	**32**
20:30 - 20:44	0	0	0	3	9	5	5	2	0	0	0	0	0	0	0	**24**
20:45 - 20:59	0	0	2	2	6	10	1	0	1	0	0	0	0	0	0	**22**
21:00 - 21:14	0	0	0	7	13	5	1	1	0	0	0	0	0	0	0	**27**
21:15 - 21:29	0	0	0	8	13	2	3	1	0	0	0	0	0	0	0	**27**
21:30 - 21:44	0	0	0	1	2	0	2	2	1	1	0	0	0	0	0	**9**
21:45 - 21:59	0	0	0	1	6	4	3	1	0	0	1	0	0	0	0	**16**
22:00 - 22:14	0	0	0	0	2	3	3	1	1	0	0	0	0	0	0	**10**
22:15 - 22:29	0	0	0	10	3	1	3	0	0	0	0	0	0	0	0	**17**
22:30 - 22:44	0	0	0	0	7	3	1	0	0	0	0	0	0	0	0	**11**
22:45 - 22:59	0	0	0	1	1	3	6	2	1	0	0	0	0	0	0	**14**
23:00 - 23:14	0	0	0	0	3	0	0	1	1	0	0	0	0	0	0	**5**
23:15 - 23:29	0	0	0	2	2	1	0	1	0	0	0	0	0	0	0	**6**
23:30 - 23:44	0	0	0	0	4	2	0	2	2	0	0	0	0	0	0	**10**
23:45 - 23:59	0	0	1	0	1	1	3	3	0	0	0	0	0	0	0	**9**
Totals	**26**	**28**	**71**	**588**	**1538**	**748**	**383**	**159**	**46**	**8**	**7**	**1**	**1**	**0**	**3**	**3607**
Percent of Total	**0.7**	**0.8**	**2.0**	**16.3**	**42.6**	**20.7**	**10.6**	**4.4**	**1.3**	**0.2**	**0.2**	**0.0**	**0.0**	**0.0**	**0.1**	**100**
Percent of AM	**0.2**	**0.4**	**1.5**	**15.8**	**44.1**	**21.9**	**11.1**	**3.5**	**1.2**	**0.2**	**0.1**	**0.0**	**0.0**	**0.0**	**0.1**	**100**
Percent of PM	**1.2**	**1.1**	**2.4**	**16.7**	**41.4**	**19.7**	**10.2**	**5.2**	**1.3**	**0.3**	**0.3**	**0.1**	**0.1**	**0.0**	**0.1**	**100**

Daily Eastbound Speeds (MPH)

Study Date: Tuesday, 09/18/2018
Unit ID: 0161
Location: SW 16TH ST / E OF SW 70TH AV

Standard Deviation:	6.9 MPH	Ten Mile Pace:	21 to 30 MPH	85th Percentile:	31.9 MPH
Mean Speed:	25.4 MPH	Percent in Ten Mile Pace:	63.4%	15th Percentile:	19.5 MPH
Median Speed:	24.5 MPH			90th Percentile:	34.2 MPH
Modal Speed:	23.5 MPH			95th Percentile:	37.4 MPH

Daily Eastbound Speeds (MPH)

Study Date: Wednesday, 09/19/2018
Unit ID: 0161
Location: SW 16TH ST / E OF SW 70TH AV

	1-5	6-10	11-15	16-20	21-25	26-30	31-35	36-40	41-45	46-50	51-55	56-60	61-65	66-70	71-99	Total
00:00 - 00:14	0	0	0	2	2	1	1	0	2	0	0	0	0	0	0	**8**
00:15 - 00:29	0	0	0	0	1	0	1	2	0	0	0	0	0	0	0	**4**
00:30 - 00:44	0	0	0	0	1	1	0	0	0	0	0	0	0	0	0	**2**
00:45 - 00:59	0	0	0	1	0	2	0	0	0	0	0	0	0	0	0	**3**
01:00 - 01:14	0	0	0	0	0	0	0	0	0	0	0	0	0	0	0	**0**
01:15 - 01:29	0	0	0	0	1	0	1	0	0	0	0	0	0	0	0	**2**
01:30 - 01:44	0	0	0	0	1	0	0	0	0	0	0	0	0	0	0	**1**
01:45 - 01:59	0	0	0	0	0	0	0	0	0	0	0	0	0	0	0	**0**
02:00 - 02:14	0	0	0	1	0	0	0	0	0	0	0	0	0	0	0	**1**
02:15 - 02:29	0	0	0	0	0	0	0	0	0	0	0	0	0	0	0	**0**
02:30 - 02:44	0	0	0	0	0	0	0	0	0	0	0	0	0	0	0	**0**
02:45 - 02:59	0	0	0	0	0	0	0	0	0	0	0	0	0	0	0	**0**
03:00 - 03:14	0	0	0	0	0	0	0	0	0	0	0	0	0	0	0	**0**
03:15 - 03:29	0	0	0	0	0	0	0	0	0	0	0	0	0	0	0	**0**
03:30 - 03:44	0	0	0	0	0	0	0	0	0	0	0	0	0	0	0	**0**
03:45 - 03:59	0	0	0	0	0	0	0	0	0	0	0	0	0	0	0	**0**
04:00 - 04:14	0	0	0	0	0	0	0	0	0	0	0	0	0	0	0	**0**
04:15 - 04:29	0	0	0	0	0	0	0	1	0	0	0	0	0	0	0	**1**
04:30 - 04:44	0	0	0	1	1	0	0	1	1	0	0	0	0	0	0	**4**
04:45 - 04:59	0	0	0	0	1	1	0	2	0	0	0	0	0	0	0	**4**
05:00 - 05:14	0	0	0	0	0	2	1	1	0	0	0	0	0	0	0	**4**
05:15 - 05:29	0	1	0	0	3	2	2	2	0	0	0	0	0	0	0	**10**
05:30 - 05:44	0	0	0	2	3	2	1	2	1	0	0	0	0	0	0	**11**
05:45 - 05:59	0	0	0	1	2	1	4	0	0	0	0	0	0	0	0	**8**
06:00 - 06:14	0	0	0	4	8	3	1	1	0	1	0	0	0	0	0	**18**
06:15 - 06:29	0	0	0	2	4	2	5	3	0	0	0	0	0	0	0	**16**
06:30 - 06:44	0	0	0	6	13	6	4	3	1	1	0	0	0	0	0	**34**
06:45 - 06:59	0	0	0	4	11	8	10	1	1	0	0	0	0	0	0	**35**
07:00 - 07:14	0	0	1	9	19	11	7	1	0	0	0	0	0	0	0	**48**
07:15 - 07:29	0	0	1	13	24	25	13	3	1	0	0	0	0	0	0	**80**
07:30 - 07:44	0	0	2	11	51	19	11	3	0	0	0	0	0	0	0	**97**
07:45 - 07:59	0	0	1	8	43	13	13	3	0	0	0	0	0	0	0	**81**
08:00 - 08:14	0	0	4	13	33	15	10	4	0	0	0	0	0	0	0	**79**
08:15 - 08:29	0	0	2	12	32	10	11	9	3	1	0	0	0	0	0	**80**
08:30 - 08:44	0	2	3	18	29	24	10	5	1	1	0	0	0	0	0	**93**
08:45 - 08:59	0	1	1	15	40	21	15	4	0	0	0	0	0	0	0	**97**
09:00 - 09:14	0	0	2	12	48	13	11	4	0	1	0	0	0	0	0	**91**
09:15 - 09:29	0	1	3	11	34	17	9	4	0	0	1	0	0	0	0	**80**
09:30 - 09:44	1	0	2	13	27	14	4	3	2	0	1	0	0	0	0	**67**
09:45 - 09:59	0	2	2	8	41	17	4	0	0	0	0	0	0	0	0	**74**
10:00 - 10:14	1	1	2	10	14	5	6	3	0	0	0	0	0	0	0	**42**
10:15 - 10:29	0	0	2	7	21	8	5	0	0	0	0	0	0	0	0	**43**
10:30 - 10:44	0	3	11	15	25	2	1	1	0	0	0	0	0	0	0	**58**
10:45 - 10:59	0	2	15	14	3	2	0	1	0	0	0	0	0	0	0	**37**
11:00 - 11:14	0	0	0	6	8	12	5	0	0	1	0	0	0	0	0	**32**
11:15 - 11:29	0	0	1	12	19	7	3	1	0	0	0	0	0	0	0	**43**
11:30 - 11:44	1	0	0	6	20	15	2	4	1	0	0	0	0	0	0	**49**
11:45 - 11:59	0	0	0	14	19	8	6	4	0	0	0	0	0	0	0	**51**
12:00 - 12:14	0	0	0	4	12	13	7	2	0	0	0	0	0	0	0	**38**
12:15 - 12:29	0	0	0	11	24	10	6	3	0	0	0	0	0	0	0	**54**
12:30 - 12:44	0	1	1	5	23	10	7	3	1	0	0	0	0	0	0	**51**

Daily Eastbound Speeds (MPH)

Study Date: Wednesday, 09/19/2018
Unit ID: 0161
Location: SW 16TH ST / E OF SW 70TH AV

	1-5	6-10	11-15	16-20	21-25	26-30	31-35	36-40	41-45	46-50	51-55	56-60	61-65	66-70	71-99	Total
12:45 - 12:59	0	0	1	15	16	15	4	1	1	0	0	0	0	0	0	**53**
13:00 - 13:14	0	0	0	5	14	13	4	2	1	1	1	0	0	0	0	**41**
13:15 - 13:29	1	0	0	4	23	10	1	4	0	1	0	0	0	0	0	**44**
13:30 - 13:44	0	0	1	14	15	15	3	1	1	0	0	0	0	0	0	**50**
13:45 - 13:59	0	0	0	12	22	4	3	2	1	0	0	0	0	0	0	**44**
14:00 - 14:14	0	1	0	12	13	11	12	2	1	0	0	0	0	0	0	**52**
14:15 - 14:29	0	0	1	7	19	9	5	4	1	0	1	0	0	0	0	**47**
14:30 - 14:44	0	0	0	2	15	15	9	3	0	0	0	0	0	0	0	**44**
14:45 - 14:59	0	0	1	4	27	13	3	1	0	0	0	0	0	0	0	**49**
15:00 - 15:14	0	0	1	3	19	7	12	2	2	1	0	0	0	0	0	**47**
15:15 - 15:29	0	0	0	6	16	14	2	1	0	0	0	0	0	0	0	**39**
15:30 - 15:44	1	0	2	9	11	4	4	3	0	0	0	0	0	0	0	**34**
15:45 - 15:59	0	0	1	4	10	10	8	3	0	0	1	0	0	0	0	**37**
16:00 - 16:14	0	0	1	5	20	7	14	3	0	0	0	0	0	0	0	**50**
16:15 - 16:29	0	0	0	2	20	10	7	3	0	0	0	0	0	0	1	**43**
16:30 - 16:44	0	5	2	7	27	7	3	3	0	0	0	0	0	0	0	**54**
16:45 - 16:59	0	0	1	8	25	4	4	3	1	0	0	0	0	0	0	**46**
17:00 - 17:14	2	1	1	3	22	8	5	0	0	0	0	0	0	0	0	**42**
17:15 - 17:29	0	0	0	7	22	13	5	0	0	0	0	0	0	0	0	**47**
17:30 - 17:44	3	2	1	11	15	6	2	3	0	0	0	0	0	0	0	**43**
17:45 - 17:59	0	1	1	4	19	11	5	2	2	0	0	0	0	0	1	**46**
18:00 - 18:14	0	1	0	10	26	10	7	0	0	0	0	0	0	0	1	**55**
18:15 - 18:29	0	0	1	13	14	15	4	1	1	1	0	0	0	0	0	**50**
18:30 - 18:44	0	1	1	8	17	5	9	1	0	0	0	0	0	0	0	**42**
18:45 - 18:59	0	1	0	10	21	7	6	1	1	0	1	0	0	0	0	**48**
19:00 - 19:14	0	0	1	5	18	8	7	2	1	0	0	0	0	0	0	**42**
19:15 - 19:29	0	0	2	11	24	5	3	3	0	0	0	0	0	1	0	**49**
19:30 - 19:44	0	0	2	13	24	10	0	2	1	0	0	0	0	0	0	**52**
19:45 - 19:59	0	0	0	4	15	11	8	0	1	0	0	0	0	0	0	**39**
20:00 - 20:14	0	0	0	5	16	8	2	1	0	0	0	0	0	0	0	**32**
20:15 - 20:29	0	0	0	2	10	8	4	1	2	0	0	0	0	0	0	**27**
20:30 - 20:44	0	0	1	1	10	3	3	1	0	0	0	0	0	0	0	**19**
20:45 - 20:59	0	0	0	2	13	7	2	1	0	0	0	0	0	0	0	**25**
21:00 - 21:14	0	0	0	3	9	6	1	4	0	0	0	0	0	0	0	**23**
21:15 - 21:29	0	0	0	1	6	4	3	4	1	0	0	0	0	0	0	**19**
21:30 - 21:44	0	0	0	0	6	7	2	0	1	0	0	0	0	0	0	**16**
21:45 - 21:59	0	0	0	3	3	0	4	4	0	0	0	0	0	0	0	**14**
22:00 - 22:14	0	0	0	3	5	2	3	1	0	2	0	0	0	0	0	**16**
22:15 - 22:29	0	0	0	1	4	7	3	0	0	0	0	0	0	0	0	**15**
22:30 - 22:44	0	0	0	3	6	4	2	0	0	0	0	0	0	0	0	**15**
22:45 - 22:59	0	0	1	0	3	3	1	1	0	0	0	0	0	0	0	**9**
23:00 - 23:14	0	0	0	1	2	1	2	0	0	0	0	0	0	0	0	**6**
23:15 - 23:29	0	0	0	5	0	0	2	0	0	0	0	0	0	0	0	**7**
23:30 - 23:44	0	0	0	3	5	0	5	0	0	0	0	0	0	0	0	**13**
23:45 - 23:59	0	0	0	0	0	1	2	0	0	0	0	0	0	0	0	**3**
Totals	**10**	**27**	**80**	**522**	**1308**	**660**	**397**	**158**	**35**	**12**	**6**	**0**	**0**	**1**	**3**	**3219**
Percent of Total	**0.3**	**0.8**	**2.5**	**16.2**	**40.6**	**20.5**	**12.3**	**4.9**	**1.1**	**0.4**	**0.2**	**0.0**	**0.0**	**0.0**	**0.1**	**100**
Percent of AM	**0.2**	**0.9**	**3.7**	**16.9**	**40.5**	**19.4**	**11.9**	**5.1**	**0.9**	**0.4**	**0.1**	**0.0**	**0.0**	**0.0**	**0.0**	**100**
Percent of PM	**0.4**	**0.8**	**1.4**	**15.7**	**40.8**	**21.4**	**12.7**	**4.7**	**1.2**	**0.3**	**0.2**	**0.0**	**0.0**	**0.1**	**0.2**	**100**

Daily Eastbound Speeds (MPH)

Study Date: Wednesday, 09/19/2018
Unit ID: 0161
Location: SW 16TH ST / E OF SW 70TH AV

Standard Deviation:	6.9 MPH	Ten Mile Pace:	21 to 30 MPH	85th Percentile:	32.6 MPH
Mean Speed:	25.7 MPH	Percent in Ten Mile Pace:	61.1%		
Median Speed:	24.7 MPH			15th Percentile:	19.5 MPH
Modal Speed:	23.5 MPH			90th Percentile:	34.6 MPH
				95th Percentile:	37.7 MPH

Daily Eastbound Speeds (MPH)

Study Date: Thursday, 09/20/2018
Unit ID: 0161
Location: SW 16TH ST / E OF SW 70TH AV

	1-5	6-10	11-15	16-20	21-25	26-30	31-35	36-40	41-45	46-50	51-55	56-60	61-65	66-70	71-99	Total
00:00 - 00:14	0	0	0	1	1	3	1	1	0	0	0	0	0	0	0	**7**
00:15 - 00:29	0	0	0	0	1	1	1	1	0	0	0	0	0	0	0	**4**
00:30 - 00:44	0	0	0	1	1	0	1	0	2	0	0	0	0	0	0	**5**
00:45 - 00:59	0	0	0	0	1	1	1	0	0	0	0	0	0	0	0	**3**
01:00 - 01:14	0	0	0	0	1	0	0	1	0	0	0	0	0	0	0	**2**
01:15 - 01:29	0	0	0	0	0	0	1	0	0	0	0	0	0	0	0	**1**
01:30 - 01:44	0	0	0	0	0	0	1	0	0	0	0	0	0	0	0	**1**
01:45 - 01:59	0	0	0	0	0	0	0	1	0	0	0	0	0	0	0	**1**
02:00 - 02:14	0	0	0	0	0	1	0	0	0	0	0	0	0	0	0	**1**
02:15 - 02:29	0	0	0	0	1	0	1	0	0	0	0	0	0	0	0	**2**
02:30 - 02:44	0	0	0	0	0	0	0	0	0	0	0	0	0	0	0	**0**
02:45 - 02:59	0	0	0	0	0	1	0	0	0	0	0	0	0	0	0	**1**
03:00 - 03:14	0	0	0	0	0	0	0	0	0	0	0	0	0	0	0	**0**
03:15 - 03:29	0	0	0	0	1	0	0	0	0	0	0	0	0	0	0	**1**
03:30 - 03:44	0	0	0	0	0	0	0	1	0	0	0	0	0	0	0	**1**
03:45 - 03:59	0	0	0	0	0	0	0	0	0	0	0	0	0	0	0	**0**
04:00 - 04:14	0	0	0	1	1	0	0	0	0	0	0	0	0	0	0	**2**
04:15 - 04:29	0	0	0	0	2	0	0	0	0	0	0	0	0	0	0	**2**
04:30 - 04:44	0	0	0	1	0	1	1	0	0	0	0	0	0	0	0	**3**
04:45 - 04:59	0	0	0	2	0	0	1	1	0	0	0	0	0	0	0	**4**
05:00 - 05:14	0	0	0	0	2	0	3	1	0	0	0	0	0	0	0	**6**
05:15 - 05:29	0	0	0	1	0	3	1	3	0	0	0	0	0	0	0	**8**
05:30 - 05:44	0	0	1	1	2	2	1	0	1	0	0	0	0	0	0	**8**
05:45 - 05:59	0	0	0	3	5	8	2	2	0	1	0	0	0	0	0	**21**
06:00 - 06:14	0	0	0	5	3	6	4	0	0	0	0	0	0	0	0	**18**
06:15 - 06:29	0	0	0	4	7	7	5	3	0	0	0	0	0	0	0	**26**
06:30 - 06:44	0	0	1	5	12	16	7	2	2	1	0	0	0	0	0	**46**
06:45 - 06:59	0	0	1	8	15	12	10	3	1	0	0	0	0	0	0	**50**
07:00 - 07:14	0	0	1	8	28	18	17	2	0	0	0	0	0	0	0	**74**
07:15 - 07:29	0	0	1	23	44	17	6	6	0	0	0	0	0	0	0	**97**
07:30 - 07:44	1	0	1	14	60	15	8	2	2	0	0	0	0	0	0	**103**
07:45 - 07:59	0	1	4	12	60	31	6	0	0	0	0	0	0	0	0	**114**
08:00 - 08:14	1	0	3	6	55	32	9	1	1	0	0	0	0	0	0	**108**
08:15 - 08:29	0	0	1	14	52	25	8	3	0	1	0	0	0	0	1	**105**
08:30 - 08:44	0	0	1	19	59	33	6	3	0	0	0	0	0	0	0	**121**
08:45 - 08:59	0	1	0	6	48	22	15	4	0	2	0	0	0	0	0	**98**
09:00 - 09:14	0	0	1	7	39	16	13	6	0	1	0	0	0	0	0	**83**
09:15 - 09:29	2	0	1	11	28	24	8	6	1	0	0	0	0	0	0	**81**
09:30 - 09:44	0	0	0	12	30	31	9	3	0	0	0	0	0	0	0	**85**
09:45 - 09:59	0	0	0	9	30	21	10	4	0	0	0	0	0	0	0	**74**
10:00 - 10:14	0	0	0	7	34	14	6	3	1	0	0	0	0	0	0	**65**
10:15 - 10:29	0	0	1	7	17	11	2	2	1	0	0	0	0	0	0	**41**
10:30 - 10:44	0	0	1	11	15	5	7	2	0	0	0	0	0	0	0	**41**
10:45 - 10:59	0	0	4	10	23	13	9	5	2	0	0	0	0	0	0	**66**
11:00 - 11:14	0	1	0	6	16	12	9	2	1	0	0	0	0	0	0	**47**
11:15 - 11:29	0	0	1	9	21	12	7	0	1	0	0	0	0	0	0	**51**
11:30 - 11:44	0	0	0	15	17	8	10	2	3	0	0	0	0	0	0	**55**
11:45 - 11:59	0	0	0	3	21	11	4	5	0	0	0	0	0	0	0	**44**
12:00 - 12:14	0	0	0	13	24	5	6	1	0	0	0	0	0	0	0	**49**
12:15 - 12:29	0	0	0	2	26	6	3	0	0	0	0	0	0	0	0	**37**
12:30 - 12:44	1	0	0	6	11	10	4	2	0	0	0	0	0	0	0	**34**

Daily Eastbound Speeds (MPH)

Study Date: Thursday, 09/20/2018
Unit ID: 0161
Location: SW 16TH ST / E OF SW 70TH AV

	1-5	6-10	11-15	16-20	21-25	26-30	31-35	36-40	41-45	46-50	51-55	56-60	61-65	66-70	71-99	Total
12:45 - 12:59	1	0	2	7	17	7	9	5	0	0	0	0	0	0	0	**48**
13:00 - 13:14	0	0	1	7	15	8	8	2	1	0	0	0	0	0	0	**42**
13:15 - 13:29	0	0	1	13	34	8	3	2	1	0	0	0	0	0	0	**62**
13:30 - 13:44	1	0	0	5	14	18	5	2	0	0	0	0	0	0	0	**45**
13:45 - 13:59	0	0	0	9	18	11	5	1	1	0	0	0	0	1	0	**46**
14:00 - 14:14	0	0	0	17	20	11	2	3	1	0	0	0	0	0	0	**54**
14:15 - 14:29	0	0	0	6	33	11	5	1	1	0	0	0	0	0	0	**57**
14:30 - 14:44	0	0	0	10	27	15	7	0	0	0	0	0	1	0	0	**60**
14:45 - 14:59	0	0	0	10	21	12	3	4	0	0	0	0	0	1	0	**51**
15:00 - 15:14	0	3	0	6	14	7	7	1	1	0	0	0	0	0	0	**39**
15:15 - 15:29	0	2	0	18	26	9	4	3	0	2	1	0	0	0	0	**65**
15:30 - 15:44	0	0	3	7	32	8	5	2	0	0	0	0	0	0	0	**57**
15:45 - 15:59	0	0	2	9	32	10	14	1	0	0	0	0	0	0	0	**68**
16:00 - 16:14	0	0	0	13	24	19	6	3	0	0	0	0	0	0	0	**65**
16:15 - 16:29	0	1	1	6	20	8	1	2	0	0	0	0	0	0	0	**39**
16:30 - 16:44	1	0	1	17	17	4	9	3	0	0	0	0	0	0	0	**52**
16:45 - 16:59	0	1	1	7	23	6	4	4	1	0	0	0	0	0	0	**47**
17:00 - 17:14	0	2	1	12	26	5	6	2	0	0	0	0	0	0	0	**54**
17:15 - 17:29	0	0	4	7	17	7	3	4	3	1	0	0	0	0	0	**46**
17:30 - 17:44	1	2	5	11	24	11	13	0	0	1	0	0	0	0	0	**68**
17:45 - 17:59	2	4	6	8	20	9	5	0	0	0	0	0	0	0	0	**54**
18:00 - 18:14	1	1	0	8	21	15	8	2	0	0	0	0	0	0	0	**56**
18:15 - 18:29	1	0	0	7	20	8	2	1	0	0	0	0	0	0	0	**39**
18:30 - 18:44	0	0	1	4	29	4	5	3	1	0	2	0	0	0	0	**49**
18:45 - 18:59	0	1	1	12	14	7	2	2	0	0	0	0	0	0	0	**39**
19:00 - 19:14	0	0	2	6	15	9	4	2	0	0	0	0	0	0	0	**38**
19:15 - 19:29	0	0	2	9	23	4	6	1	1	0	0	0	0	0	0	**46**
19:30 - 19:44	0	1	1	16	16	8	10	0	1	0	0	0	0	0	0	**53**
19:45 - 19:59	0	0	0	6	9	6	2	2	0	0	0	0	0	0	0	**25**
20:00 - 20:14	0	0	1	8	12	6	2	1	1	0	0	0	0	0	0	**31**
20:15 - 20:29	0	0	0	2	11	4	5	3	0	0	1	0	0	0	0	**26**
20:30 - 20:44	0	0	0	8	7	8	4	0	0	0	0	0	0	0	0	**27**
20:45 - 20:59	0	0	0	4	9	11	4	1	0	0	0	0	0	0	0	**29**
21:00 - 21:14	0	0	0	8	8	7	2	3	0	0	0	0	0	0	0	**28**
21:15 - 21:29	0	0	1	4	8	6	7	0	1	0	0	0	0	0	0	**27**
21:30 - 21:44	0	0	0	1	7	8	7	0	0	0	0	0	0	0	0	**23**
21:45 - 21:59	0	0	0	1	6	3	4	2	1	0	0	0	0	0	0	**17**
22:00 - 22:14	0	0	0	2	9	4	6	0	1	0	0	0	0	0	0	**22**
22:15 - 22:29	0	0	0	2	3	7	1	0	0	0	0	0	0	0	0	**13**
22:30 - 22:44	0	0	0	0	3	7	2	1	0	0	0	0	0	0	0	**13**
22:45 - 22:59	0	0	0	1	1	3	2	2	0	0	0	0	0	0	0	**9**
23:00 - 23:14	0	0	0	0	4	2	5	1	0	0	0	0	0	0	0	**12**
23:15 - 23:29	0	0	1	3	3	4	2	0	0	0	0	0	0	0	0	**13**
23:30 - 23:44	0	0	1	1	3	1	1	0	0	0	0	0	0	0	0	**7**
23:45 - 23:59	0	0	0	0	1	0	1	2	0	0	0	0	0	0	0	**4**
Totals	**13**	**21**	**63**	**581**	**1530**	**800**	**442**	**158**	**36**	**10**	**4**	**0**	**1**	**2**	**1**	**3662**
Percent of Total	**0.4**	**0.6**	**1.7**	**15.9**	**41.8**	**21.8**	**12.1**	**4.3**	**1.0**	**0.3**	**0.1**	**0.0**	**0.0**	**0.1**	**0.0**	**100**
Percent of AM	**0.2**	**0.2**	**1.4**	**13.6**	**42.4**	**24.4**	**11.9**	**4.6**	**1.1**	**0.3**	**0.0**	**0.0**	**0.0**	**0.0**	**0.1**	**100**
Percent of PM	**0.5**	**1.0**	**2.1**	**18.0**	**41.2**	**19.5**	**12.3**	**4.1**	**0.9**	**0.2**	**0.2**	**0.0**	**0.1**	**0.1**	**0.0**	**100**

Daily Eastbound Speeds (MPH)

Study Date: Thursday, 09/20/2018
Unit ID: 0161
Location: SW 16TH ST / E OF SW 70TH AV

Standard Deviation:	6.5 MPH	Ten Mile Pace:	21 to 30 MPH	85th Percentile:	32.2 MPH
Mean Speed:	25.7 MPH	Percent in Ten Mile Pace:	63.6%	15th Percentile:	19.9 MPH
Median Speed:	24.8 MPH			90th Percentile:	34.3 MPH
Modal Speed:	23.5 MPH			95th Percentile:	36.9 MPH

Daily Westbound Speeds (MPH)

Study Date: Tuesday, 09/18/2018
Unit ID: 0056
Location: SW 16TH ST / E OF SW 70TH AV

	1-5	6-10	11-15	16-20	21-25	26-30	31-35	36-40	41-45	46-50	51-55	56-60	61-65	66-70	71-99	Total
00:00 - 00:14	0	0	0	0	1	1	1	1	2	0	0	0	0	0	0	**6**
00:15 - 00:29	0	0	0	0	0	2	2	1	0	1	0	0	0	0	0	**6**
00:30 - 00:44	0	0	0	0	0	2	1	3	1	0	0	0	0	0	0	**7**
00:45 - 00:59	0	0	0	0	0	0	0	1	0	0	0	0	0	0	0	**1**
01:00 - 01:14	0	0	0	0	0	2	2	1	0	1	0	0	0	0	0	**6**
01:15 - 01:29	0	0	0	0	0	0	0	0	0	0	0	0	0	0	0	**0**
01:30 - 01:44	0	0	0	0	0	0	1	0	0	0	0	0	0	0	0	**1**
01:45 - 01:59	0	0	0	0	1	1	0	0	0	0	0	0	0	0	0	**2**
02:00 - 02:14	0	0	0	0	0	0	0	1	0	0	0	0	0	0	0	**1**
02:15 - 02:29	0	0	0	0	0	0	1	0	0	0	0	0	0	0	0	**1**
02:30 - 02:44	0	0	0	0	0	0	0	0	0	0	0	0	0	0	0	**0**
02:45 - 02:59	0	0	0	0	0	0	1	0	0	0	0	0	0	0	0	**1**
03:00 - 03:14	0	0	0	0	0	0	0	0	0	0	0	0	0	0	0	**0**
03:15 - 03:29	0	0	0	0	0	1	0	0	0	0	0	0	0	0	0	**1**
03:30 - 03:44	0	0	0	0	0	1	1	0	0	0	0	0	0	0	0	**2**
03:45 - 03:59	0	0	0	0	1	0	0	0	0	0	0	0	0	0	0	**1**
04:00 - 04:14	0	0	0	0	0	0	0	0	0	0	0	0	0	0	0	**0**
04:15 - 04:29	0	0	0	0	1	0	0	1	0	0	0	0	0	0	0	**2**
04:30 - 04:44	0	0	0	1	1	0	0	1	0	1	0	0	0	0	0	**4**
04:45 - 04:59	0	0	0	0	1	2	0	1	0	0	0	0	0	0	0	**4**
05:00 - 05:14	0	0	0	0	0	1	0	0	0	0	0	0	0	0	0	**1**
05:15 - 05:29	0	0	0	0	1	1	1	2	0	0	0	0	0	0	0	**5**
05:30 - 05:44	0	1	1	3	5	2	1	3	0	1	0	0	0	0	0	**17**
05:45 - 05:59	0	0	0	2	1	6	1	2	1	1	0	0	0	0	0	**14**
06:00 - 06:14	0	0	0	2	5	2	5	2	0	0	0	0	0	0	0	**16**
06:15 - 06:29	0	0	0	0	0	5	2	0	0	0	0	0	0	0	0	**7**
06:30 - 06:44	0	0	0	2	11	12	9	5	0	0	0	0	0	0	0	**39**
06:45 - 06:59	0	1	3	6	14	10	5	5	2	0	0	0	0	0	0	**46**
07:00 - 07:14	0	0	0	3	5	16	13	2	3	0	0	0	0	0	1	**43**
07:15 - 07:29	0	0	0	3	16	17	9	7	2	0	0	0	0	0	0	**54**
07:30 - 07:44	0	1	3	3	18	22	12	4	4	0	0	0	0	0	0	**67**
07:45 - 07:59	0	0	2	3	13	20	16	7	1	0	0	0	0	0	0	**62**
08:00 - 08:14	0	0	1	5	19	20	13	5	2	0	0	0	0	0	0	**65**
08:15 - 08:29	0	2	4	10	17	20	13	7	0	0	0	0	0	0	0	**73**
08:30 - 08:44	6	3	6	10	13	17	18	5	1	0	0	0	0	0	0	**79**
08:45 - 08:59	1	0	2	3	17	22	7	2	0	0	1	0	0	0	0	**55**
09:00 - 09:14	0	0	0	5	9	15	11	7	1	0	0	0	0	0	0	**48**
09:15 - 09:29	0	0	1	2	12	16	14	0	0	1	0	0	0	0	0	**46**
09:30 - 09:44	1	1	2	4	10	14	10	2	0	0	0	0	0	0	0	**44**
09:45 - 09:59	0	0	0	4	14	14	18	2	0	0	0	0	1	0	0	**53**
10:00 - 10:14	0	2	0	4	8	12	6	3	1	0	0	0	0	0	0	**36**
10:15 - 10:29	0	0	0	1	9	14	10	9	2	0	0	0	0	0	0	**45**
10:30 - 10:44	0	0	1	6	9	13	8	0	2	0	0	0	0	0	0	**39**
10:45 - 10:59	0	0	1	0	7	15	7	6	0	0	0	0	0	0	0	**36**
11:00 - 11:14	0	0	0	2	14	18	8	3	0	0	0	0	0	0	0	**45**
11:15 - 11:29	0	0	0	4	12	9	9	1	3	0	0	0	0	0	0	**38**
11:30 - 11:44	0	0	0	6	17	13	9	8	1	0	0	0	0	0	0	**54**
11:45 - 11:59	1	1	0	6	12	24	12	4	2	0	0	0	0	0	0	**62**
12:00 - 12:14	0	0	1	5	14	14	14	4	1	0	0	0	0	0	0	**53**
12:15 - 12:29	0	0	1	3	12	12	12	5	0	0	0	0	0	0	0	**45**
12:30 - 12:44	0	0	0	5	7	14	12	4	0	1	0	0	0	0	0	**43**

Printed: 10/04/2018 at 13:47
TrafficViewer Pro v1.6.4.124
PicoCount 2500 V2.40 (s/n# 14060370)

Daily Westbound Speeds (MPH)

Study Date: Tuesday, 09/18/2018
Unit ID: 0056
Location: SW 16TH ST / E OF SW 70TH AV

	1-5	6-10	11-15	16-20	21-25	26-30	31-35	36-40	41-45	46-50	51-55	56-60	61-65	66-70	71-99	Total
12:45 - 12:59	0	0	0	7	18	19	4	4	0	0	0	0	0	0	0	**52**
13:00 - 13:14	0	0	0	7	11	22	8	4	2	1	0	0	1	0	0	**56**
13:15 - 13:29	0	0	1	2	14	16	17	4	1	0	0	0	0	0	0	**55**
13:30 - 13:44	0	0	1	2	18	19	10	6	0	0	0	0	0	0	0	**56**
13:45 - 13:59	0	0	0	5	13	24	21	4	0	0	0	0	0	0	0	**67**
14:00 - 14:14	0	0	1	6	25	19	11	3	1	0	0	0	0	0	0	**66**
14:15 - 14:29	0	0	0	5	17	31	7	3	3	0	0	0	0	0	0	**66**
14:30 - 14:44	0	1	3	9	17	33	12	3	0	1	0	0	0	0	0	**79**
14:45 - 14:59	0	1	1	3	25	16	26	4	2	0	0	0	0	0	0	**78**
15:00 - 15:14	0	0	1	4	14	17	17	5	1	0	0	0	0	0	1	**60**
15:15 - 15:29	0	3	6	8	29	30	19	1	1	0	0	0	0	0	0	**97**
15:30 - 15:44	0	4	7	11	24	27	16	5	4	0	0	0	0	0	0	**98**
15:45 - 15:59	2	5	5	6	34	32	12	4	1	0	1	0	0	0	0	**102**
16:00 - 16:14	0	3	3	10	26	29	19	4	0	0	0	0	0	0	0	**94**
16:15 - 16:29	0	1	11	17	29	23	20	2	1	0	0	0	0	0	0	**104**
16:30 - 16:44	0	2	13	17	31	30	17	5	0	0	0	0	0	0	0	**115**
16:45 - 16:59	0	0	3	12	38	29	22	3	0	0	0	0	0	0	0	**107**
17:00 - 17:14	0	6	6	23	35	26	18	2	3	0	0	0	0	0	0	**119**
17:15 - 17:29	0	4	14	27	42	25	13	1	2	0	0	0	0	0	0	**128**
17:30 - 17:44	0	4	14	28	43	29	14	1	0	0	0	1	0	0	0	**134**
17:45 - 17:59	0	12	22	30	28	26	11	2	0	0	0	0	0	0	0	**131**
18:00 - 18:14	2	9	23	30	34	25	7	0	0	0	0	0	0	0	0	**130**
18:15 - 18:29	0	2	21	34	41	20	14	1	0	0	0	0	0	0	0	**133**
18:30 - 18:44	0	1	5	24	34	24	17	4	0	1	0	0	0	0	0	**110**
18:45 - 18:59	0	3	2	9	16	27	15	1	1	1	0	0	0	0	0	**75**
19:00 - 19:14	0	0	2	12	25	27	8	3	0	0	0	0	0	0	0	**77**
19:15 - 19:29	0	0	0	6	21	30	18	2	0	0	0	0	0	0	0	**77**
19:30 - 19:44	0	0	0	3	18	15	14	5	0	0	0	0	0	0	0	**55**
19:45 - 19:59	0	0	1	5	10	17	7	4	1	0	0	0	0	0	0	**45**
20:00 - 20:14	0	0	0	1	16	25	10	0	0	0	0	0	0	0	0	**52**
20:15 - 20:29	0	0	1	0	8	22	9	0	0	2	0	0	0	0	0	**42**
20:30 - 20:44	0	0	1	3	7	12	8	3	0	0	0	0	0	0	0	**34**
20:45 - 20:59	0	0	0	0	5	14	8	1	1	0	0	0	0	0	0	**29**
21:00 - 21:14	0	0	0	5	5	13	7	2	1	0	0	0	0	0	0	**33**
21:15 - 21:29	0	0	0	7	6	13	9	2	1	0	0	0	0	0	0	**38**
21:30 - 21:44	0	0	0	7	13	9	4	0	0	0	0	0	0	0	0	**33**
21:45 - 21:59	0	0	1	3	5	10	8	0	2	1	0	0	0	0	0	**30**
22:00 - 22:14	0	0	0	2	4	9	9	1	1	1	0	0	0	0	0	**27**
22:15 - 22:29	0	0	0	1	3	4	9	2	1	0	0	0	0	0	0	**20**
22:30 - 22:44	0	0	0	1	3	4	4	2	0	0	0	0	0	0	0	**14**
22:45 - 22:59	0	0	0	1	1	2	6	1	2	1	0	0	0	0	0	**14**
23:00 - 23:14	0	0	0	0	0	3	5	1	0	0	0	0	0	0	0	**9**
23:15 - 23:29	0	0	0	0	1	2	3	0	0	0	0	0	0	0	0	**6**
23:30 - 23:44	0	0	0	1	1	0	4	0	2	1	0	0	0	0	0	**9**
23:45 - 23:59	0	0	0	1	1	2	3	0	0	0	0	0	0	0	0	**7**
Totals	**13**	**73**	**198**	**508**	**1136**	**1273**	**815**	**232**	**67**	**17**	**2**	**1**	**2**	**0**	**2**	**4339**
Percent of Total	**0.3**	**1.7**	**4.6**	**11.7**	**26.2**	**29.3**	**18.8**	**5.3**	**1.5**	**0.4**	**0.0**	**0.0**	**0.0**	**0.0**	**0.0**	**100**
Percent of AM	**0.7**	**1.0**	**2.2**	**8.1**	**23.8**	**30.9**	**20.8**	**9.2**	**2.5**	**0.5**	**0.1**	**0.0**	**0.1**	**0.0**	**0.1**	**100**
Percent of PM	**0.1**	**2.0**	**5.5**	**13.1**	**27.1**	**28.7**	**18.0**	**3.8**	**1.2**	**0.4**	**0.0**	**0.0**	**0.0**	**0.0**	**0.0**	**100**

Daily Westbound Speeds (MPH)

Study Date: Tuesday, 09/18/2018
Unit ID: 0056
Location: SW 16TH ST / E OF SW 70TH AV

Standard Deviation:	7.3 MPH	Ten Mile Pace:	21 to 30 MPH	85th Percentile:	34.0 MPH
Mean Speed:	26.8 MPH	Percent in Ten Mile Pace:	55.5%	15th Percentile:	19.6 MPH
Median Speed:	26.9 MPH			90th Percentile:	35.3 MPH
Modal Speed:	28.5 MPH			95th Percentile:	38.3 MPH

Daily Westbound Speeds (MPH)

Study Date: Wednesday, 09/19/2018
Unit ID: 0056
Location: SW 16TH ST / E OF SW 70TH AV

	1-5	6-10	11-15	16-20	21-25	26-30	31-35	36-40	41-45	46-50	51-55	56-60	61-65	66-70	71-99	Total
00:00 - 00:14	0	0	0	0	0	2	0	1	1	0	0	0	0	0	0	**4**
00:15 - 00:29	0	0	0	0	1	1	1	0	0	0	0	0	0	0	0	**3**
00:30 - 00:44	0	0	0	1	0	0	1	1	0	0	0	0	0	0	0	**3**
00:45 - 00:59	0	0	0	0	0	0	1	1	1	0	0	0	0	0	0	**3**
01:00 - 01:14	0	0	0	0	0	2	1	0	1	0	0	0	0	0	0	**4**
01:15 - 01:29	0	0	0	0	0	0	2	0	0	0	0	0	0	0	0	**2**
01:30 - 01:44	0	0	0	0	0	0	0	1	0	0	0	0	0	0	0	**1**
01:45 - 01:59	0	0	0	0	0	2	0	0	0	0	0	0	0	0	0	**2**
02:00 - 02:14	0	0	1	0	0	0	0	0	0	1	0	0	0	0	0	**2**
02:15 - 02:29	0	0	0	0	0	1	1	2	0	0	0	0	0	0	0	**4**
02:30 - 02:44	0	0	0	0	1	1	0	0	0	0	0	0	0	0	0	**2**
02:45 - 02:59	0	0	0	0	0	0	0	0	0	0	0	0	0	0	0	**0**
03:00 - 03:14	0	0	0	0	0	0	0	0	0	1	0	0	0	0	0	**1**
03:15 - 03:29	0	0	0	0	0	0	1	0	0	0	0	0	0	0	0	**1**
03:30 - 03:44	0	0	0	0	0	1	0	0	0	0	0	0	0	0	0	**1**
03:45 - 03:59	0	0	0	0	0	1	1	0	0	0	0	0	0	0	0	**2**
04:00 - 04:14	0	0	0	1	0	0	1	0	0	0	0	0	0	0	0	**2**
04:15 - 04:29	0	0	0	0	0	0	0	0	0	0	0	0	0	0	0	**0**
04:30 - 04:44	0	0	0	0	0	0	0	0	0	0	0	0	0	0	0	**0**
04:45 - 04:59	0	0	0	0	0	1	1	0	0	0	0	0	0	0	0	**2**
05:00 - 05:14	0	0	0	0	0	0	1	1	0	0	0	0	0	0	0	**2**
05:15 - 05:29	0	0	0	0	1	0	0	0	1	0	0	0	0	0	0	**2**
05:30 - 05:44	0	0	0	0	4	3	3	1	1	0	0	0	0	0	0	**12**
05:45 - 05:59	0	1	0	1	2	2	3	1	0	1	0	0	0	0	0	**11**
06:00 - 06:14	0	0	0	2	1	6	3	2	1	0	0	0	0	0	0	**15**
06:15 - 06:29	0	0	0	0	4	3	5	1	0	0	0	0	0	0	0	**13**
06:30 - 06:44	0	0	0	2	3	10	8	3	0	0	0	0	0	0	0	**26**
06:45 - 06:59	0	0	0	0	3	10	8	5	0	0	0	0	0	0	0	**26**
07:00 - 07:14	0	0	0	1	0	10	8	4	2	0	0	0	0	0	0	**25**
07:15 - 07:29	0	0	0	7	13	20	8	1	1	0	0	0	0	0	0	**50**
07:30 - 07:44	0	0	1	6	11	15	15	5	0	2	1	0	0	0	1	**57**
07:45 - 07:59	0	0	0	4	13	10	9	2	4	1	0	0	0	0	0	**43**
08:00 - 08:14	0	2	3	6	14	15	8	3	3	0	0	0	0	0	0	**54**
08:15 - 08:29	0	0	0	4	8	14	18	4	1	1	0	1	0	0	0	**51**
08:30 - 08:44	0	0	0	4	15	20	10	5	1	0	0	0	0	0	0	**55**
08:45 - 08:59	2	0	1	4	12	16	15	6	1	0	0	0	0	0	0	**57**
09:00 - 09:14	0	2	1	8	7	22	11	1	0	0	1	0	0	0	0	**53**
09:15 - 09:29	1	0	0	4	9	12	14	5	0	0	0	0	0	0	0	**45**
09:30 - 09:44	0	0	4	7	11	25	12	4	2	0	0	0	0	0	0	**65**
09:45 - 09:59	0	0	2	13	16	16	10	2	0	0	0	0	0	0	0	**59**
10:00 - 10:14	0	0	1	5	8	11	14	6	1	0	0	0	0	0	0	**46**
10:15 - 10:29	0	0	0	4	21	19	4	2	0	0	0	0	0	0	0	**50**
10:30 - 10:44	0	0	1	8	7	13	9	4	0	0	0	0	0	0	0	**42**
10:45 - 10:59	0	0	2	15	15	17	5	4	0	0	0	0	0	0	0	**58**
11:00 - 11:14	0	0	0	4	7	13	8	1	1	0	0	0	0	0	0	**34**
11:15 - 11:29	0	0	0	6	10	14	8	6	1	0	0	0	0	0	0	**45**
11:30 - 11:44	0	0	1	7	11	15	13	3	0	0	0	0	0	0	0	**50**
11:45 - 11:59	0	0	1	1	10	16	16	0	0	0	0	0	0	0	0	**44**
12:00 - 12:14	0	0	0	6	7	18	12	2	2	0	0	0	1	0	0	**48**
12:15 - 12:29	0	0	0	6	13	14	13	9	1	0	0	0	0	0	0	**56**
12:30 - 12:44	0	0	1	7	18	16	5	3	1	0	0	0	0	0	0	**51**

Daily Westbound Speeds (MPH)

Study Date: Wednesday, 09/19/2018
Unit ID: 0056
Location: SW 16TH ST / E OF SW 70TH AV

	1-5	6-10	11-15	16-20	21-25	26-30	31-35	36-40	41-45	46-50	51-55	56-60	61-65	66-70	71-99	Total
12:45 - 12:59	0	0	0	6	15	17	10	5	1	0	0	0	0	0	0	**54**
13:00 - 13:14	0	0	0	5	13	21	13	3	0	0	0	0	0	0	0	**55**
13:15 - 13:29	0	0	0	9	20	17	14	3	0	1	0	0	0	0	0	**64**
13:30 - 13:44	0	0	2	8	20	25	14	2	0	0	0	0	0	0	0	**71**
13:45 - 13:59	0	0	0	5	16	13	12	5	2	0	0	1	0	0	0	**54**
14:00 - 14:14	0	0	1	6	16	13	8	0	1	1	0	0	0	0	0	**46**
14:15 - 14:29	0	0	4	8	18	30	7	7	0	1	0	0	0	0	0	**75**
14:30 - 14:44	0	0	3	12	21	26	15	2	1	0	0	0	1	0	0	**81**
14:45 - 14:59	0	2	3	8	19	29	12	2	0	2	1	0	0	0	0	**78**
15:00 - 15:14	0	1	1	2	14	19	20	5	0	0	0	0	0	0	0	**62**
15:15 - 15:29	0	0	0	2	21	32	9	9	3	0	0	0	0	0	0	**76**
15:30 - 15:44	0	1	1	5	11	26	21	3	0	1	0	0	0	0	0	**69**
15:45 - 15:59	0	0	0	0	11	24	20	5	1	0	0	0	0	0	0	**61**
16:00 - 16:14	0	1	3	6	9	28	26	2	0	0	0	0	0	0	0	**75**
16:15 - 16:29	0	1	3	7	28	34	21	7	1	0	0	0	0	0	0	**102**
16:30 - 16:44	0	2	3	12	31	25	20	6	1	0	0	0	0	0	0	**100**
16:45 - 16:59	0	3	7	20	30	29	18	4	1	0	0	0	0	0	0	**112**
17:00 - 17:14	0	1	4	13	38	30	15	6	1	1	0	0	0	0	0	**109**
17:15 - 17:29	1	4	12	26	33	33	12	6	1	0	0	0	0	0	0	**128**
17:30 - 17:44	0	6	20	27	37	23	13	0	0	0	0	0	0	0	0	**126**
17:45 - 17:59	6	3	25	24	31	35	16	3	0	0	0	0	0	0	0	**143**
18:00 - 18:14	0	14	15	29	34	15	8	1	0	0	0	0	0	0	1	**117**
18:15 - 18:29	0	4	25	21	29	20	11	1	0	0	0	1	0	0	0	**112**
18:30 - 18:44	0	6	4	12	29	36	13	4	0	0	0	0	0	0	0	**104**
18:45 - 18:59	1	1	2	15	42	22	9	1	0	0	0	0	0	0	0	**93**
19:00 - 19:14	0	0	1	2	16	27	15	1	1	0	0	0	0	0	1	**64**
19:15 - 19:29	0	1	1	5	22	28	13	0	0	1	0	0	0	0	0	**71**
19:30 - 19:44	0	0	3	7	20	21	10	4	1	0	0	0	0	0	0	**66**
19:45 - 19:59	0	0	0	4	14	12	11	5	2	0	0	0	0	0	0	**48**
20:00 - 20:14	0	0	0	3	10	21	18	2	1	0	0	0	0	0	0	**55**
20:15 - 20:29	0	0	1	2	7	8	9	3	4	0	0	0	0	0	0	**34**
20:30 - 20:44	0	0	0	3	7	8	8	2	2	1	0	0	0	0	0	**31**
20:45 - 20:59	0	0	0	0	11	16	12	3	2	0	0	0	0	0	0	**44**
21:00 - 21:14	0	0	0	1	6	11	6	1	1	1	0	0	0	0	0	**27**
21:15 - 21:29	0	0	0	2	5	8	10	2	1	0	0	0	0	0	0	**28**
21:30 - 21:44	0	0	0	3	6	12	4	0	0	1	0	0	0	0	0	**26**
21:45 - 21:59	0	0	0	0	5	5	4	1	0	0	0	0	0	0	0	**15**
22:00 - 22:14	0	0	0	0	4	6	6	3	2	0	0	0	0	0	0	**21**
22:15 - 22:29	0	0	0	0	4	5	4	2	1	0	0	0	0	0	0	**16**
22:30 - 22:44	0	0	3	1	0	4	6	1	0	0	0	0	0	0	0	**15**
22:45 - 22:59	0	0	0	1	2	4	3	2	0	0	1	0	0	0	0	**13**
23:00 - 23:14	0	0	0	0	1	1	4	3	0	1	0	0	0	0	0	**10**
23:15 - 23:29	0	0	0	1	2	2	2	2	0	0	0	0	0	0	0	**9**
23:30 - 23:44	0	0	0	0	1	3	3	2	0	0	0	0	0	0	0	**9**
23:45 - 23:59	0	0	0	0	0	0	3	2	0	0	0	0	0	0	0	**5**
Totals	**11**	**56**	**167**	**467**	**1005**	**1231**	**795**	**235**	**60**	**19**	**4**	**3**	**2**	**0**	**3**	**4058**
Percent of Total	**0.3**	**1.4**	**4.1**	**11.5**	**24.8**	**30.3**	**19.6**	**5.8**	**1.5**	**0.5**	**0.1**	**0.1**	**0.0**	**0.0**	**0.1**	**100**
Percent of AM	**0.3**	**0.4**	**1.7**	**11.1**	**21.1**	**31.8**	**22.8**	**7.8**	**2.1**	**0.6**	**0.2**	**0.1**	**0.0**	**0.0**	**0.1**	**100**
Percent of PM	**0.3**	**1.7**	**5.1**	**11.7**	**26.2**	**29.8**	**18.4**	**5.0**	**1.2**	**0.4**	**0.1**	**0.1**	**0.1**	**0.0**	**0.1**	**100**

Daily Westbound Speeds (MPH)

Study Date: Wednesday, 09/19/2018
Unit ID: 0056
Location: SW 16TH ST / E OF SW 70TH AV

Standard Deviation:	7.4 MPH	Ten Mile Pace:	21 to 30 MPH	85th Percentile:	34.2 MPH
Mean Speed:	27.1 MPH	Percent in Ten Mile Pace:	55.1%		
Median Speed:	27.3 MPH			15th Percentile:	20.0 MPH
Modal Speed:	28.5 MPH			90th Percentile:	35.5 MPH
				95th Percentile:	38.6 MPH

Daily Westbound Speeds (MPH)

Study Date: Thursday, 09/20/2018
Unit ID: 0056
Location: SW 16TH ST / E OF SW 70TH AV

	1-5	6-10	11-15	16-20	21-25	26-30	31-35	36-40	41-45	46-50	51-55	56-60	61-65	66-70	71-99	Total
00:00 - 00:14	0	0	0	0	2	0	2	2	0	0	0	0	0	0	0	**6**
00:15 - 00:29	0	0	0	0	0	2	1	0	0	0	0	0	0	0	0	**3**
00:30 - 00:44	0	0	0	0	1	1	1	1	0	0	0	0	0	0	0	**4**
00:45 - 00:59	0	0	0	0	2	6	0	0	0	0	0	0	0	0	0	**8**
01:00 - 01:14	0	0	0	0	0	0	0	0	0	0	0	0	0	0	0	**0**
01:15 - 01:29	0	0	0	0	1	0	1	1	0	0	0	0	0	0	0	**3**
01:30 - 01:44	0	0	0	1	0	1	1	0	0	0	0	0	0	0	0	**3**
01:45 - 01:59	0	0	0	0	0	0	1	0	1	1	1	0	0	0	0	**4**
02:00 - 02:14	0	0	0	0	0	0	0	0	1	0	0	0	0	0	0	**1**
02:15 - 02:29	0	0	0	1	0	1	0	0	0	0	0	0	0	0	0	**2**
02:30 - 02:44	0	0	0	0	0	0	1	0	0	0	0	0	0	0	0	**1**
02:45 - 02:59	0	0	0	0	1	0	0	1	0	0	0	0	0	0	0	**2**
03:00 - 03:14	0	0	0	0	0	0	0	0	0	0	0	0	0	0	0	**0**
03:15 - 03:29	0	0	0	0	0	0	0	0	0	0	0	0	0	0	0	**0**
03:30 - 03:44	0	0	0	0	1	0	0	0	0	0	0	0	0	0	0	**1**
03:45 - 03:59	0	0	0	0	0	0	1	0	0	0	0	0	0	0	0	**1**
04:00 - 04:14	0	0	0	0	1	0	0	1	0	0	1	0	0	0	0	**3**
04:15 - 04:29	0	0	0	0	1	0	0	0	1	0	0	0	0	0	0	**2**
04:30 - 04:44	0	0	0	0	0	0	1	0	1	0	0	0	0	0	0	**2**
04:45 - 04:59	0	0	0	0	0	0	1	0	0	0	0	0	0	0	0	**1**
05:00 - 05:14	0	0	0	0	0	0	1	0	0	0	0	0	0	0	0	**1**
05:15 - 05:29	0	0	0	0	1	1	1	1	0	0	0	0	0	0	0	**4**
05:30 - 05:44	0	0	0	0	2	3	6	3	0	0	0	0	0	0	0	**14**
05:45 - 05:59	0	0	0	0	3	6	4	2	1	0	0	0	0	0	0	**16**
06:00 - 06:14	0	0	0	0	4	7	5	0	0	0	0	0	0	0	0	**16**
06:15 - 06:29	0	0	0	1	2	3	8	2	0	0	0	0	0	0	0	**16**
06:30 - 06:44	0	0	0	5	7	8	7	3	1	0	0	0	0	0	0	**31**
06:45 - 06:59	0	0	1	5	11	15	14	2	2	0	0	0	0	0	0	**50**
07:00 - 07:14	0	0	1	8	7	9	9	11	0	0	0	0	0	0	0	**45**
07:15 - 07:29	0	1	0	5	11	23	9	0	0	0	0	0	0	0	0	**49**
07:30 - 07:44	0	1	5	6	25	20	12	2	0	1	0	0	0	0	1	**73**
07:45 - 07:59	0	1	3	9	24	18	15	2	1	0	0	0	0	0	0	**73**
08:00 - 08:14	1	2	1	9	22	20	7	1	2	0	0	0	0	0	0	**65**
08:15 - 08:29	0	0	2	7	29	26	14	4	1	0	0	0	0	0	0	**83**
08:30 - 08:44	0	0	5	8	19	17	16	1	1	0	1	1	0	0	0	**69**
08:45 - 08:59	0	0	1	3	23	27	14	5	2	0	0	0	0	0	0	**75**
09:00 - 09:14	0	0	1	2	15	14	7	6	1	0	0	0	0	0	0	**46**
09:15 - 09:29	0	0	0	5	11	9	8	2	1	0	0	0	0	0	0	**36**
09:30 - 09:44	0	1	1	1	7	14	13	4	0	0	0	0	0	0	0	**41**
09:45 - 09:59	0	0	2	5	11	13	18	5	0	0	0	0	0	0	0	**54**
10:00 - 10:14	0	1	0	3	8	21	7	2	0	1	0	0	0	0	0	**43**
10:15 - 10:29	0	0	1	3	20	15	10	5	2	0	0	0	0	0	0	**56**
10:30 - 10:44	0	0	0	0	14	13	23	0	0	0	0	0	0	0	0	**50**
10:45 - 10:59	0	0	0	3	18	13	9	1	0	0	0	0	0	0	0	**44**
11:00 - 11:14	0	0	2	9	17	16	8	3	1	1	0	0	0	0	0	**57**
11:15 - 11:29	0	0	0	3	7	13	11	3	1	0	0	0	0	0	0	**38**
11:30 - 11:44	0	0	0	1	12	16	6	4	0	0	0	0	0	0	0	**39**
11:45 - 11:59	0	0	0	2	11	21	4	2	0	1	1	0	0	0	0	**42**
12:00 - 12:14	0	0	1	5	14	13	12	3	0	0	0	0	0	0	0	**48**
12:15 - 12:29	0	0	0	2	13	19	8	10	0	0	0	0	0	0	0	**52**
12:30 - 12:44	1	1	0	6	20	13	11	1	0	0	0	0	0	0	0	**53**

Printed: 10/04/2018 at 13:47
TrafficViewer Pro v1.6.4.124
PicoCount 2500 V2.40 (s/n# 14060370)

Daily Westbound Speeds (MPH)

Study Date: Thursday, 09/20/2018
Unit ID: 0056
Location: SW 16TH ST / E OF SW 70TH AV

	1-5	6-10	11-15	16-20	21-25	26-30	31-35	36-40	41-45	46-50	51-55	56-60	61-65	66-70	71-99	Total
12:45 - 12:59	0	0	1	6	24	19	10	4	0	0	0	0	0	0	0	**64**
13:00 - 13:14	0	0	1	13	13	23	10	1	0	0	1	0	0	0	0	**62**
13:15 - 13:29	0	0	1	5	25	18	7	1	1	0	0	0	0	0	0	**58**
13:30 - 13:44	0	0	0	6	21	9	13	5	1	0	0	0	0	0	0	**55**
13:45 - 13:59	0	0	4	13	25	26	9	6	0	0	0	1	0	0	0	**84**
14:00 - 14:14	0	0	1	6	23	23	6	4	1	0	0	0	0	0	0	**64**
14:15 - 14:29	0	0	5	7	19	22	9	5	2	1	1	0	0	0	0	**71**
14:30 - 14:44	0	0	0	5	15	27	9	2	1	0	0	0	0	0	0	**59**
14:45 - 14:59	0	0	1	11	26	22	20	5	0	0	0	0	0	0	0	**85**
15:00 - 15:14	0	3	14	22	26	20	11	3	1	0	0	0	0	0	0	**100**
15:15 - 15:29	1	3	11	16	26	24	12	5	2	0	0	0	0	0	0	**100**
15:30 - 15:44	0	0	2	8	36	26	16	9	1	0	0	0	0	0	0	**98**
15:45 - 15:59	0	1	4	15	31	26	12	3	2	0	0	0	0	0	0	**94**
16:00 - 16:14	5	4	7	14	24	29	12	4	2	1	0	0	0	0	0	**102**
16:15 - 16:29	0	5	5	26	25	24	9	8	0	1	0	0	0	0	0	**103**
16:30 - 16:44	0	3	15	23	42	32	13	3	0	0	0	0	0	0	0	**131**
16:45 - 16:59	0	3	8	15	28	41	23	2	0	0	0	0	0	0	0	**120**
17:00 - 17:14	0	6	11	24	34	34	16	1	0	0	0	0	0	0	0	**126**
17:15 - 17:29	0	3	6	21	44	33	32	1	0	1	0	0	0	0	0	**141**
17:30 - 17:44	0	9	14	26	46	28	8	5	2	0	0	0	0	0	0	**138**
17:45 - 17:59	0	8	11	34	34	28	13	4	1	0	0	0	0	0	0	**133**
18:00 - 18:14	0	5	13	33	29	32	13	6	0	0	0	0	0	0	0	**131**
18:15 - 18:29	0	2	14	18	37	31	15	4	0	0	0	0	0	0	0	**121**
18:30 - 18:44	0	1	10	20	34	18	14	3	0	0	0	0	0	0	0	**100**
18:45 - 18:59	0	1	1	13	36	21	17	6	0	0	0	0	0	0	0	**95**
19:00 - 19:14	0	0	1	7	17	28	12	4	1	0	0	0	0	0	0	**70**
19:15 - 19:29	0	0	3	5	27	17	13	2	1	0	0	0	0	0	0	**68**
19:30 - 19:44	0	0	2	2	16	16	14	3	0	0	0	0	0	0	0	**53**
19:45 - 19:59	0	1	0	1	16	16	13	7	0	0	0	0	0	0	0	**54**
20:00 - 20:14	0	0	0	4	10	13	7	3	0	0	0	0	0	0	0	**37**
20:15 - 20:29	0	0	0	1	5	16	15	5	0	0	0	0	0	0	0	**42**
20:30 - 20:44	0	0	0	0	9	10	12	5	0	0	0	0	0	0	0	**36**
20:45 - 20:59	0	0	0	4	8	9	7	2	0	0	0	0	0	0	0	**30**
21:00 - 21:14	0	0	0	0	5	10	3	3	3	0	0	0	0	0	0	**24**
21:15 - 21:29	0	0	0	5	4	6	6	5	1	0	0	0	0	0	0	**27**
21:30 - 21:44	0	0	1	6	4	6	12	3	0	0	0	0	0	0	0	**32**
21:45 - 21:59	0	0	0	2	7	10	10	1	0	0	0	0	0	0	0	**30**
22:00 - 22:14	0	0	0	0	1	4	4	3	1	0	0	0	0	0	0	**13**
22:15 - 22:29	0	0	0	1	2	3	3	1	1	0	0	0	0	0	0	**11**
22:30 - 22:44	0	0	0	0	1	5	2	4	1	0	0	0	0	0	0	**13**
22:45 - 22:59	0	0	0	0	3	7	4	0	0	0	0	0	0	0	0	**14**
23:00 - 23:14	0	0	0	1	3	1	4	4	2	0	0	0	0	0	0	**15**
23:15 - 23:29	0	0	0	1	0	4	2	1	0	0	0	0	0	0	0	**8**
23:30 - 23:44	0	0	2	1	1	3	3	1	1	0	0	0	0	0	0	**12**
23:45 - 23:59	0	0	0	0	1	1	4	2	0	0	0	0	0	0	0	**8**
Totals	**8**	**66**	**196**	**559**	**1261**	**1258**	**787**	**255**	**50**	**9**	**6**	**2**	**0**	**0**	**1**	**4458**
Percent of Total	**0.2**	**1.5**	**4.4**	**12.5**	**28.3**	**28.2**	**17.7**	**5.7**	**1.1**	**0.2**	**0.1**	**0.0**	**0.0**	**0.0**	**0.0**	**100**
Percent of AM	**0.1**	**0.5**	**2.0**	**8.2**	**27.6**	**30.8**	**21.8**	**6.4**	**1.6**	**0.4**	**0.3**	**0.1**	**0.0**	**0.0**	**0.1**	**100**
Percent of PM	**0.2**	**1.9**	**5.3**	**14.3**	**28.6**	**27.2**	**16.0**	**5.4**	**0.9**	**0.1**	**0.1**	**0.0**	**0.0**	**0.0**	**0.0**	**100**

Daily Westbound Speeds (MPH)

Study Date: Thursday, 09/20/2018
Unit ID: 0056
Location: SW 16TH ST / E OF SW 70TH AV

Standard Deviation:	7.1 MPH	Ten Mile Pace:	21 to 30 MPH	85th Percentile:	33.8 MPH
Mean Speed:	26.6 MPH	Percent in Ten Mile Pace:	56.5%	15th Percentile:	19.6 MPH
Median Speed:	26.6 MPH			90th Percentile:	35.2 MPH
Modal Speed:	23.5 MPH			95th Percentile:	38.0 MPH

Daily Eastbound Speeds (MPH)

Study Date: Tuesday, 09/18/2018
Unit ID: 0163
Location: SW 12TH ST / E OF SW 70TH AVE

	0-5	5-10	10-15	15-20	20-25	25-30	30-35	35-40	40-45	45-50	50-55	55-60	60-65	65-70	70-75	Total
00:00 - 00:14	0	0	1	0	1	1	0	0	0	0	0	0	0	0	0	**3**
00:15 - 00:29	0	0	0	1	1	0	0	0	0	0	0	0	0	0	0	**2**
00:30 - 00:44	0	0	0	2	0	0	0	0	0	0	0	0	0	0	0	**2**
00:45 - 00:59	0	0	1	0	0	0	0	0	0	0	0	0	0	0	0	**1**
01:00 - 01:14	0	1	0	1	2	0	0	0	0	0	0	0	0	0	0	**4**
01:15 - 01:29	0	0	1	0	0	0	0	0	0	0	0	0	0	0	0	**1**
01:30 - 01:44	0	0	0	0	0	0	0	0	0	0	0	0	0	0	0	**0**
01:45 - 01:59	0	0	0	0	0	0	0	0	0	0	0	0	0	0	0	**0**
02:00 - 02:14	0	0	1	0	0	0	0	0	0	0	0	0	0	0	0	**1**
02:15 - 02:29	0	0	0	0	0	0	0	0	0	0	0	0	0	0	0	**0**
02:30 - 02:44	0	0	1	0	0	0	0	0	0	0	0	0	0	0	0	**1**
02:45 - 02:59	0	0	0	0	0	0	0	0	0	0	0	0	0	0	0	**0**
03:00 - 03:14	0	0	0	0	0	0	0	0	0	0	0	0	0	0	0	**0**
03:15 - 03:29	0	0	0	0	0	0	0	0	0	0	0	0	0	0	0	**0**
03:30 - 03:44	0	0	0	0	0	0	0	0	0	0	0	0	0	0	0	**0**
03:45 - 03:59	0	0	0	0	0	0	0	0	0	0	0	0	0	0	0	**0**
04:00 - 04:14	0	0	0	0	0	0	0	0	0	0	0	0	0	0	0	**0**
04:15 - 04:29	0	0	0	0	0	0	0	0	0	0	0	0	0	0	0	**0**
04:30 - 04:44	0	0	0	0	0	0	0	0	0	0	0	0	0	0	0	**0**
04:45 - 04:59	0	0	1	1	0	0	0	0	0	0	0	0	0	0	0	**2**
05:00 - 05:14	0	0	2	1	0	0	0	0	0	0	0	0	0	0	0	**3**
05:15 - 05:29	0	0	0	0	0	0	0	0	0	0	0	0	0	0	0	**0**
05:30 - 05:44	0	0	1	2	0	0	0	0	0	0	0	0	0	0	0	**3**
05:45 - 05:59	0	0	0	2	1	0	0	0	0	0	0	0	0	0	0	**3**
06:00 - 06:14	0	0	0	1	3	0	0	0	0	0	0	0	0	0	0	**4**
06:15 - 06:29	0	1	1	7	2	0	0	0	0	0	0	0	0	0	0	**11**
06:30 - 06:44	0	1	3	6	1	0	0	0	0	0	0	0	0	0	0	**11**
06:45 - 06:59	0	0	1	7	6	1	0	0	0	0	0	0	0	0	0	**15**
07:00 - 07:14	0	2	1	13	5	1	0	0	0	0	0	0	0	0	0	**22**
07:15 - 07:29	0	0	9	14	5	0	0	0	0	0	0	0	0	0	0	**28**
07:30 - 07:44	0	0	2	18	8	1	0	0	0	0	0	0	0	0	0	**29**
07:45 - 07:59	0	0	0	12	10	2	0	0	0	0	0	0	0	0	0	**24**
08:00 - 08:14	0	0	5	10	13	1	0	1	0	0	0	0	0	0	0	**30**
08:15 - 08:29	0	0	5	6	8	1	0	0	0	0	0	0	0	0	0	**20**
08:30 - 08:44	0	0	5	16	5	0	0	0	0	0	0	0	0	0	0	**26**
08:45 - 08:59	0	1	3	18	10	4	0	0	0	0	0	0	0	0	0	**36**
09:00 - 09:14	0	2	1	17	4	1	0	0	0	0	0	0	0	0	0	**25**
09:15 - 09:29	0	0	1	12	6	0	0	0	0	0	0	0	0	0	0	**19**
09:30 - 09:44	0	0	4	14	9	0	0	0	1	0	0	0	0	0	0	**28**
09:45 - 09:59	0	0	4	18	5	1	0	0	0	0	0	0	0	0	0	**28**
10:00 - 10:14	0	0	0	22	7	1	0	0	0	0	0	0	0	0	0	**30**
10:15 - 10:29	0	0	1	14	7	0	0	0	0	0	0	0	0	0	0	**22**
10:30 - 10:44	0	1	6	8	3	0	0	0	0	0	0	0	0	0	0	**18**
10:45 - 10:59	0	0	3	19	8	1	0	0	0	0	0	0	0	0	0	**31**
11:00 - 11:14	0	1	4	7	3	0	0	0	0	0	0	0	0	0	0	**15**
11:15 - 11:29	0	0	7	5	4	1	0	0	0	0	0	0	0	0	0	**17**
11:30 - 11:44	0	2	3	11	4	2	0	0	0	0	0	0	0	0	0	**22**
11:45 - 11:59	0	0	4	18	3	0	0	0	0	0	0	0	0	0	0	**25**
12:00 - 12:14	0	2	5	9	4	0	0	0	0	0	0	0	0	0	0	**20**
12:15 - 12:29	1	0	7	13	4	0	1	0	0	0	0	0	0	0	0	**26**
12:30 - 12:44	0	0	5	12	3	0	0	0	0	0	0	0	0	0	0	**20**

Daily Eastbound Speeds (MPH)

Study Date: Tuesday, 09/18/2018
Unit ID: 0163
Location: SW 12TH ST / E OF SW 70TH AVE

	0-5	5-10	10-15	15-20	20-25	25-30	30-35	35-40	40-45	45-50	50-55	55-60	60-65	65-70	70-75	Total
12:45 - 12:59	0	0	5	20	8	0	0	0	0	0	0	0	0	0	0	**33**
13:00 - 13:14	0	0	2	17	7	0	0	0	0	0	0	0	0	0	0	**26**
13:15 - 13:29	1	1	4	12	10	0	0	0	0	0	0	0	0	0	0	**28**
13:30 - 13:44	0	1	4	10	6	0	0	0	0	0	0	0	0	0	0	**21**
13:45 - 13:59	0	0	6	12	7	0	0	0	0	0	0	0	0	0	0	**25**
14:00 - 14:14	0	0	3	14	6	0	0	0	0	0	0	0	0	0	0	**23**
14:15 - 14:29	0	0	3	9	5	0	0	0	0	0	0	0	0	0	0	**17**
14:30 - 14:44	0	1	7	9	6	0	0	0	0	0	0	0	0	0	0	**23**
14:45 - 14:59	1	0	2	12	9	0	0	0	0	0	0	0	0	0	0	**24**
15:00 - 15:14	0	1	1	14	12	0	0	0	0	0	0	0	0	0	0	**28**
15:15 - 15:29	0	0	3	14	6	0	0	0	0	0	0	0	0	0	0	**23**
15:30 - 15:44	0	0	9	9	5	1	0	0	0	0	0	0	0	0	0	**24**
15:45 - 15:59	0	0	5	10	4	1	0	0	0	0	0	0	0	0	0	**20**
16:00 - 16:14	0	0	6	20	5	0	0	0	0	0	0	0	0	0	0	**31**
16:15 - 16:29	0	0	6	9	11	0	0	0	0	0	0	0	0	0	0	**26**
16:30 - 16:44	0	1	6	15	7	0	0	0	0	0	0	0	0	0	0	**29**
16:45 - 16:59	0	0	3	14	8	1	0	0	0	0	0	0	0	0	0	**26**
17:00 - 17:14	0	0	9	23	6	0	1	0	0	0	0	0	0	0	0	**39**
17:15 - 17:29	0	1	4	7	3	1	0	0	0	0	0	0	0	0	0	**16**
17:30 - 17:44	0	0	3	12	10	0	0	1	0	0	0	0	0	0	0	**26**
17:45 - 17:59	0	0	3	19	9	0	0	0	0	0	0	0	0	0	0	**31**
18:00 - 18:14	0	1	7	14	10	2	0	0	0	0	0	0	0	0	0	**34**
18:15 - 18:29	0	0	3	12	4	0	0	0	1	0	0	0	0	0	0	**20**
18:30 - 18:44	0	0	2	13	4	0	0	0	0	0	0	0	0	0	0	**19**
18:45 - 18:59	0	0	3	11	3	0	0	0	0	0	0	0	0	0	0	**17**
19:00 - 19:14	0	0	4	6	1	0	0	0	0	0	0	0	0	0	0	**11**
19:15 - 19:29	0	1	7	7	5	0	0	0	0	0	0	0	0	0	0	**20**
19:30 - 19:44	0	1	5	10	3	0	0	0	0	0	0	0	0	0	0	**19**
19:45 - 19:59	0	0	3	6	5	0	0	0	0	0	0	0	0	0	0	**14**
20:00 - 20:14	0	1	4	2	1	1	0	0	0	0	0	0	0	0	0	**9**
20:15 - 20:29	0	1	5	7	2	0	0	0	0	0	0	0	0	0	0	**15**
20:30 - 20:44	0	3	1	4	2	0	0	0	0	0	0	0	0	0	0	**10**
20:45 - 20:59	0	2	7	6	2	0	0	0	0	0	0	0	0	0	0	**17**
21:00 - 21:14	0	1	2	6	2	0	0	0	0	0	0	0	0	0	0	**11**
21:15 - 21:29	0	0	0	6	1	0	0	0	0	0	0	0	0	0	0	**7**
21:30 - 21:44	0	0	2	2	2	0	0	0	0	0	0	0	0	0	0	**6**
21:45 - 21:59	0	0	3	4	0	0	0	0	0	0	0	0	0	0	0	**7**
22:00 - 22:14	0	0	1	2	0	0	0	0	0	0	0	0	0	0	0	**3**
22:15 - 22:29	0	0	0	5	1	0	0	0	0	0	0	0	0	0	0	**6**
22:30 - 22:44	0	0	0	1	2	0	0	0	0	0	0	0	0	0	0	**3**
22:45 - 22:59	0	1	2	3	0	0	0	0	0	0	0	0	0	0	0	**6**
23:00 - 23:14	0	0	0	2	1	0	0	0	0	0	0	0	0	0	0	**3**
23:15 - 23:29	0	0	0	1	1	0	0	0	0	0	0	0	0	0	0	**2**
23:30 - 23:44	0	0	0	2	1	0	0	0	0	0	0	0	0	0	0	**3**
23:45 - 23:59	0	0	1	0	0	0	0	0	0	0	0	0	0	0	0	**1**
Totals	**3**	**32**	**255**	**750**	**358**	**26**	**2**	**2**	**2**	**0**	**0**	**0**	**0**	**0**	**0**	**1430**
Percent of Total	**0.2**	**2.2**	**17.8**	**52.4**	**25.0**	**1.8**	**0.1**	**0.1**	**0.1**	**0.0**	**0.0**	**0.0**	**0.0**	**0.0**	**0.0**	**100**
Percent of AM	**0.0**	**2.1**	**14.6**	**53.9**	**25.6**	**3.4**	**0.0**	**0.2**	**0.2**	**0.0**	**0.0**	**0.0**	**0.0**	**0.0**	**0.0**	**100**
Percent of PM	**0.3**	**2.3**	**19.9**	**51.5**	**24.7**	**0.8**	**0.2**	**0.1**	**0.1**	**0.0**	**0.0**	**0.0**	**0.0**	**0.0**	**0.0**	**100**

Daily Eastbound Speeds (MPH)

Study Date: Tuesday, 09/18/2018
Unit ID: 0163
Location: SW 12TH ST / E OF SW 70TH AVE

Standard Deviation:	4.5 MPH	Ten Mile Pace:	15 to 24 MPH	85th Percentile:	22.9 MPH
Mean Speed:	18.4 MPH	Percent in Ten Mile Pace:	77.5%		
Median Speed:	18.4 MPH			15th Percentile:	14.2 MPH
Modal Speed:	18.0 MPH			90th Percentile:	24.1 MPH
				95th Percentile:	25.3 MPH

Daily Eastbound Speeds (MPH)

Study Date: Wednesday, 09/19/2018
Unit ID: 0163
Location: SW 12TH ST / E OF SW 70TH AVE

	0-5	5-10	10-15	15-20	20-25	25-30	30-35	35-40	40-45	45-50	50-55	55-60	60-65	65-70	70-75	Total
00:00 - 00:14	0	0	1	0	0	0	0	0	0	0	0	0	0	0	0	**1**
00:15 - 00:29	0	0	0	2	0	0	0	0	0	0	0	0	0	0	0	**2**
00:30 - 00:44	0	0	1	0	0	0	0	0	0	0	0	0	0	0	0	**1**
00:45 - 00:59	0	0	0	0	0	0	0	0	0	0	0	0	0	0	0	**0**
01:00 - 01:14	0	0	0	0	0	0	0	0	0	0	0	0	0	0	0	**0**
01:15 - 01:29	0	0	0	0	1	0	0	0	0	0	0	0	0	0	0	**1**
01:30 - 01:44	0	0	0	0	0	0	0	0	0	0	0	0	0	0	0	**0**
01:45 - 01:59	0	0	0	0	0	0	0	0	0	0	0	0	0	0	0	**0**
02:00 - 02:14	0	0	0	0	0	0	0	0	0	0	0	0	0	0	0	**0**
02:15 - 02:29	0	0	0	0	0	0	0	0	0	0	0	0	0	0	0	**0**
02:30 - 02:44	0	0	0	0	0	0	0	0	0	0	0	0	0	0	0	**0**
02:45 - 02:59	0	0	0	0	0	0	0	0	0	0	0	0	0	0	0	**0**
03:00 - 03:14	0	0	0	0	0	0	0	0	0	0	0	0	0	0	0	**0**
03:15 - 03:29	0	0	0	0	0	0	0	0	0	0	0	0	0	0	0	**0**
03:30 - 03:44	0	0	1	0	0	0	0	0	0	0	0	0	0	0	0	**1**
03:45 - 03:59	0	0	0	0	0	0	0	0	0	0	0	0	0	0	0	**0**
04:00 - 04:14	0	0	0	0	0	0	0	0	0	0	0	0	0	0	0	**0**
04:15 - 04:29	0	0	0	0	0	0	0	0	0	0	0	0	0	0	0	**0**
04:30 - 04:44	0	0	0	0	0	0	0	0	0	0	0	0	0	0	0	**0**
04:45 - 04:59	0	0	0	0	0	0	0	0	0	0	0	0	0	0	0	**0**
05:00 - 05:14	0	0	0	1	1	0	0	0	0	0	0	0	0	0	0	**2**
05:15 - 05:29	0	0	1	0	0	0	0	0	0	0	0	0	0	0	0	**1**
05:30 - 05:44	0	0	2	2	0	0	0	0	0	0	0	0	0	0	0	**4**
05:45 - 05:59	0	0	1	3	0	0	0	0	0	0	0	0	0	0	0	**4**
06:00 - 06:14	0	0	0	2	2	1	0	0	0	0	0	0	0	0	0	**5**
06:15 - 06:29	0	0	3	4	1	0	0	0	0	0	0	0	0	0	0	**8**
06:30 - 06:44	0	0	2	5	3	0	0	0	0	0	0	0	0	0	0	**10**
06:45 - 06:59	0	0	3	9	7	0	0	0	0	0	0	0	0	0	0	**19**
07:00 - 07:14	0	1	8	7	2	0	0	0	0	0	0	0	0	0	0	**18**
07:15 - 07:29	0	0	3	11	10	1	0	0	0	0	0	0	0	0	0	**25**
07:30 - 07:44	0	1	6	15	4	1	0	0	0	0	0	0	0	0	0	**27**
07:45 - 07:59	0	0	8	13	6	0	0	0	0	0	0	0	0	0	0	**27**
08:00 - 08:14	0	0	3	9	7	0	0	0	1	0	0	0	0	0	0	**20**
08:15 - 08:29	0	0	3	8	6	2	0	0	0	0	0	0	0	0	0	**19**
08:30 - 08:44	0	0	1	15	11	2	0	0	0	0	0	0	0	0	0	**29**
08:45 - 08:59	0	0	2	6	12	2	0	0	0	0	0	0	0	0	0	**22**
09:00 - 09:14	0	0	5	16	5	0	0	0	0	0	0	0	0	0	0	**26**
09:15 - 09:29	0	0	6	11	3	0	0	0	0	0	0	0	0	0	0	**20**
09:30 - 09:44	0	1	1	21	6	0	0	0	0	0	0	0	0	0	0	**29**
09:45 - 09:59	0	1	5	7	2	0	0	0	0	0	0	0	0	0	0	**15**
10:00 - 10:14	0	3	2	9	12	0	0	0	0	0	0	0	0	0	0	**26**
10:15 - 10:29	1	0	5	13	3	1	0	0	0	0	0	0	0	0	0	**23**
10:30 - 10:44	0	1	6	10	4	0	0	0	0	0	0	0	0	0	0	**21**
10:45 - 10:59	0	2	4	9	7	0	0	0	0	0	0	0	0	0	0	**22**
11:00 - 11:14	0	0	8	16	6	1	0	0	0	0	0	0	0	0	0	**31**
11:15 - 11:29	0	1	3	9	6	0	0	0	0	0	0	0	0	0	0	**19**
11:30 - 11:44	0	0	2	12	6	0	0	0	0	0	0	0	0	0	0	**20**
11:45 - 11:59	0	0	4	8	7	1	0	0	0	0	0	0	0	0	0	**20**
12:00 - 12:14	4	0	4	14	6	1	0	0	0	0	0	0	0	0	0	**29**
12:15 - 12:29	0	1	3	12	8	0	0	0	0	0	0	0	0	0	0	**24**
12:30 - 12:44	0	0	7	12	7	1	0	0	0	0	0	0	0	0	0	**27**

Daily Eastbound Speeds (MPH)

Study Date: Wednesday, 09/19/2018
Unit ID: 0163
Location: SW 12TH ST / E OF SW 70TH AVE

	0-5	5-10	10-15	15-20	20-25	25-30	30-35	35-40	40-45	45-50	50-55	55-60	60-65	65-70	70-75	Total
12:45 - 12:59	0	1	4	10	9	0	0	0	0	1	0	0	0	0	0	**25**
13:00 - 13:14	2	2	4	20	7	0	0	0	0	0	0	0	0	0	0	**35**
13:15 - 13:29	0	0	4	21	7	0	0	0	0	0	0	0	0	0	0	**32**
13:30 - 13:44	0	0	3	9	8	0	0	0	0	0	0	0	0	0	0	**20**
13:45 - 13:59	0	0	3	12	5	0	1	0	0	0	0	0	0	0	0	**21**
14:00 - 14:14	0	0	2	6	3	0	0	0	0	0	0	0	0	0	0	**11**
14:15 - 14:29	0	4	5	14	7	0	0	0	0	0	0	0	0	0	0	**30**
14:30 - 14:44	0	1	3	8	7	1	1	0	0	1	0	0	0	0	0	**22**
14:45 - 14:59	0	2	6	18	7	0	0	0	0	0	0	0	0	0	0	**33**
15:00 - 15:14	0	1	2	10	3	0	0	0	0	0	0	0	0	0	0	**16**
15:15 - 15:29	0	1	3	15	3	1	0	0	0	0	0	0	0	0	0	**23**
15:30 - 15:44	0	0	2	16	11	2	0	0	0	0	0	0	0	0	0	**31**
15:45 - 15:59	2	0	4	15	9	0	0	0	0	0	0	0	0	0	0	**30**
16:00 - 16:14	0	0	5	15	5	2	0	0	0	0	0	0	1	0	0	**28**
16:15 - 16:29	0	0	3	5	2	1	0	0	0	0	0	0	0	0	0	**11**
16:30 - 16:44	0	0	7	20	9	1	0	0	0	0	0	0	0	0	0	**37**
16:45 - 16:59	0	1	4	8	13	0	0	0	0	0	0	0	0	0	0	**26**
17:00 - 17:14	0	1	5	14	6	0	1	0	0	0	0	0	0	0	0	**27**
17:15 - 17:29	3	0	1	11	7	0	0	0	0	0	0	0	0	0	0	**22**
17:30 - 17:44	0	0	1	7	8	0	0	0	0	0	0	0	0	0	0	**16**
17:45 - 17:59	0	0	2	10	4	0	0	0	0	0	0	0	0	0	0	**16**
18:00 - 18:14	0	1	2	14	6	1	0	0	0	0	0	0	0	0	0	**24**
18:15 - 18:29	0	0	2	12	12	0	0	0	0	0	0	0	0	0	0	**26**
18:30 - 18:44	0	0	2	15	6	1	0	0	0	0	0	0	0	0	0	**24**
18:45 - 18:59	1	0	2	11	5	1	0	0	0	0	0	0	0	0	0	**20**
19:00 - 19:14	0	0	7	10	3	1	0	0	0	0	0	0	1	0	0	**22**
19:15 - 19:29	0	2	4	9	8	0	0	0	0	0	0	0	0	0	0	**23**
19:30 - 19:44	0	0	7	7	2	0	0	0	0	0	0	1	0	0	0	**17**
19:45 - 19:59	0	1	3	7	2	0	0	0	0	0	0	0	0	0	0	**13**
20:00 - 20:14	0	0	2	4	3	0	0	0	0	0	0	0	0	0	0	**9**
20:15 - 20:29	0	1	4	4	2	0	0	0	0	0	0	0	0	0	0	**11**
20:30 - 20:44	0	0	1	4	3	0	0	0	0	0	0	0	0	0	0	**8**
20:45 - 20:59	0	0	2	5	1	0	0	0	0	0	0	0	0	0	0	**8**
21:00 - 21:14	0	0	2	6	0	0	0	0	0	0	0	0	0	0	0	**8**
21:15 - 21:29	0	0	4	5	2	0	0	0	0	0	0	0	0	0	0	**11**
21:30 - 21:44	0	0	2	5	2	1	0	0	0	0	0	0	0	0	0	**10**
21:45 - 21:59	0	0	0	5	4	0	0	0	0	0	0	0	0	0	0	**9**
22:00 - 22:14	0	0	2	1	1	0	0	0	0	0	0	0	0	0	0	**4**
22:15 - 22:29	0	0	3	4	1	0	0	0	0	0	0	0	0	0	0	**8**
22:30 - 22:44	0	0	0	1	2	0	0	0	0	0	0	0	0	0	0	**3**
22:45 - 22:59	0	0	0	2	2	0	0	0	0	0	0	0	0	0	0	**4**
23:00 - 23:14	0	0	0	0	0	0	0	0	0	0	0	0	0	0	0	**0**
23:15 - 23:29	0	0	2	0	1	0	0	0	0	0	0	0	0	0	0	**3**
23:30 - 23:44	0	0	0	0	0	0	0	0	0	0	0	0	0	0	0	**0**
23:45 - 23:59	0	0	0	1	0	0	0	0	0	0	0	0	0	0	0	**1**
Totals	**13**	**31**	**240**	**687**	**369**	**27**	**3**	**0**	**1**	**2**	**0**	**1**	**2**	**0**	**0**	**1376**
Percent of Total	**0.9**	**2.3**	**17.4**	**49.9**	**26.8**	**2.0**	**0.2**	**0.0**	**0.1**	**0.1**	**0.0**	**0.1**	**0.1**	**0.0**	**0.0**	**100**
Percent of AM	**0.2**	**2.1**	**19.3**	**48.8**	**27.0**	**2.3**	**0.0**	**0.0**	**0.2**	**0.0**	**0.0**	**0.0**	**0.0**	**0.0**	**0.0**	**100**
Percent of PM	**1.4**	**2.3**	**16.3**	**50.6**	**26.7**	**1.7**	**0.3**	**0.0**	**0.0**	**0.2**	**0.0**	**0.1**	**0.2**	**0.0**	**0.0**	**100**

Daily Eastbound Speeds (MPH)

Study Date: Wednesday, 09/19/2018
Unit ID: 0163
Location: SW 12TH ST / E OF SW 70TH AVE

Standard Deviation:	5.1 MPH	Ten Mile Pace:	15 to 24 MPH	85th Percentile:	23.2 MPH
Mean Speed:	18.5 MPH	Percent in Ten Mile Pace:	76.7%		
Median Speed:	18.5 MPH			15th Percentile:	14.0 MPH
Modal Speed:	18.0 MPH			90th Percentile:	24.3 MPH
				95th Percentile:	25.5 MPH

Daily Eastbound Speeds (MPH)

Study Date: Thursday, 09/20/2018
Unit ID: 0163
Location: SW 12TH ST / E OF SW 70TH AVE

	0-5	5-10	10-15	15-20	20-25	25-30	30-35	35-40	40-45	45-50	50-55	55-60	60-65	65-70	70-75	Total
00:00 - 00:14	0	0	0	2	0	0	0	0	0	0	0	0	0	0	0	**2**
00:15 - 00:29	0	0	1	0	0	0	0	0	0	0	0	0	0	0	0	**1**
00:30 - 00:44	0	0	0	2	0	0	0	0	0	0	0	0	0	0	0	**2**
00:45 - 00:59	0	0	0	1	0	0	0	0	0	0	0	0	0	0	0	**1**
01:00 - 01:14	0	0	0	0	0	0	0	0	0	0	0	0	0	0	0	**0**
01:15 - 01:29	0	0	0	0	0	0	0	0	0	0	0	0	0	0	0	**0**
01:30 - 01:44	0	0	0	2	0	0	0	0	0	0	0	0	0	0	0	**2**
01:45 - 01:59	0	0	0	0	0	0	0	0	0	0	0	0	0	0	0	**0**
02:00 - 02:14	0	0	0	0	0	0	0	0	0	0	0	0	0	0	0	**0**
02:15 - 02:29	0	0	0	0	0	0	0	0	0	0	0	0	0	0	0	**0**
02:30 - 02:44	0	0	0	0	0	0	0	0	0	0	0	0	0	0	0	**0**
02:45 - 02:59	0	0	0	0	0	0	0	0	0	0	0	0	0	0	0	**0**
03:00 - 03:14	0	0	0	1	0	0	0	0	0	0	0	0	0	0	0	**1**
03:15 - 03:29	0	0	0	0	0	0	0	0	0	0	0	0	0	0	0	**0**
03:30 - 03:44	0	0	0	0	0	0	0	0	0	0	0	0	0	0	0	**0**
03:45 - 03:59	0	0	0	0	0	0	0	0	0	0	0	0	0	0	0	**0**
04:00 - 04:14	0	0	0	0	0	0	0	0	0	0	0	0	0	0	0	**0**
04:15 - 04:29	0	0	0	0	0	0	0	0	0	0	0	0	0	0	0	**0**
04:30 - 04:44	0	0	0	0	0	0	0	0	0	0	0	0	0	0	0	**0**
04:45 - 04:59	0	0	0	0	0	0	0	0	0	0	0	0	0	0	0	**0**
05:00 - 05:14	0	0	0	2	1	0	0	0	0	0	0	0	0	0	0	**3**
05:15 - 05:29	0	0	0	1	0	0	0	0	0	0	0	0	0	0	0	**1**
05:30 - 05:44	0	0	0	1	1	0	0	0	0	0	0	0	0	0	0	**2**
05:45 - 05:59	0	0	0	2	3	0	0	0	0	0	0	0	0	0	0	**5**
06:00 - 06:14	0	0	0	1	2	0	0	0	0	0	0	0	0	0	0	**3**
06:15 - 06:29	0	1	1	5	1	0	0	0	0	0	0	0	0	0	0	**8**
06:30 - 06:44	1	1	2	7	3	1	0	0	0	0	0	0	0	0	0	**15**
06:45 - 06:59	0	0	8	6	1	0	0	0	0	0	0	0	0	0	0	**15**
07:00 - 07:14	1	0	7	8	8	1	0	0	0	0	0	0	0	0	0	**25**
07:15 - 07:29	0	3	6	11	10	0	0	0	0	0	0	0	0	0	0	**30**
07:30 - 07:44	0	0	1	11	12	0	0	0	0	0	0	0	0	0	0	**24**
07:45 - 07:59	0	0	1	13	13	0	0	0	0	0	0	0	0	0	0	**27**
08:00 - 08:14	0	0	6	17	16	1	0	0	0	0	0	0	0	0	0	**40**
08:15 - 08:29	0	1	6	25	13	0	0	0	0	0	0	0	0	0	0	**45**
08:30 - 08:44	0	0	2	27	5	0	0	0	0	0	0	0	0	0	0	**34**
08:45 - 08:59	0	1	3	12	10	1	0	0	0	0	0	0	0	0	0	**27**
09:00 - 09:14	1	0	7	18	12	1	0	0	0	0	0	0	0	0	0	**39**
09:15 - 09:29	0	0	6	9	13	1	0	0	0	0	0	0	0	0	0	**29**
09:30 - 09:44	0	1	11	17	5	0	0	0	0	0	0	0	0	0	0	**34**
09:45 - 09:59	0	0	3	16	11	0	0	0	0	0	0	0	0	0	0	**30**
10:00 - 10:14	0	1	7	12	5	0	0	0	0	0	0	0	0	0	0	**25**
10:15 - 10:29	0	1	3	4	6	0	0	0	0	0	0	0	0	0	0	**14**
10:30 - 10:44	0	0	3	9	8	0	0	0	0	0	0	0	0	0	0	**20**
10:45 - 10:59	1	1	5	9	9	0	0	0	0	0	0	0	0	0	0	**25**
11:00 - 11:14	0	1	5	15	3	0	0	0	0	0	0	0	0	0	0	**24**
11:15 - 11:29	0	0	5	16	6	1	0	0	0	0	0	0	0	0	0	**28**
11:30 - 11:44	0	0	7	10	7	0	0	0	0	0	0	0	0	0	0	**24**
11:45 - 11:59	0	0	8	13	4	0	0	0	0	0	0	0	0	0	0	**25**
12:00 - 12:14	0	1	4	13	7	0	0	0	0	0	0	0	0	0	0	**25**
12:15 - 12:29	0	0	6	9	8	0	0	0	0	0	0	0	0	0	0	**23**
12:30 - 12:44	0	0	3	11	4	0	0	0	0	0	0	0	0	0	0	**18**

Daily Eastbound Speeds (MPH)

Study Date: Thursday, 09/20/2018
Unit ID: 0163
Location: SW 12TH ST / E OF SW 70TH AVE

	0-5	5-10	10-15	15-20	20-25	25-30	30-35	35-40	40-45	45-50	50-55	55-60	60-65	65-70	70-75	Total
12:45 - 12:59	1	2	3	9	7	0	0	0	0	0	0	0	0	0	0	**22**
13:00 - 13:14	0	0	10	18	4	0	0	0	0	0	0	0	0	0	0	**32**
13:15 - 13:29	0	0	2	12	4	1	0	0	0	0	0	0	0	0	0	**19**
13:30 - 13:44	0	2	6	9	7	0	0	0	0	0	0	0	0	0	0	**24**
13:45 - 13:59	0	0	2	8	11	0	0	0	0	0	0	0	0	0	0	**21**
14:00 - 14:14	0	0	4	10	4	0	0	0	0	0	0	0	0	0	0	**18**
14:15 - 14:29	0	1	3	10	7	1	0	1	1	0	0	0	0	0	0	**24**
14:30 - 14:44	0	2	7	8	2	0	0	0	0	0	0	0	0	0	0	**19**
14:45 - 14:59	0	1	4	11	3	0	0	0	0	0	0	0	0	0	0	**19**
15:00 - 15:14	0	0	4	13	9	0	0	0	0	0	0	0	0	0	0	**26**
15:15 - 15:29	0	1	6	19	6	0	0	0	0	0	0	0	0	0	0	**32**
15:30 - 15:44	0	1	7	11	4	0	0	0	0	0	0	0	0	0	0	**23**
15:45 - 15:59	1	0	5	8	4	0	0	0	0	0	0	0	0	0	0	**18**
16:00 - 16:14	0	0	4	15	7	0	0	0	0	0	0	0	0	0	0	**26**
16:15 - 16:29	0	0	2	8	11	0	0	0	0	0	0	0	0	0	0	**21**
16:30 - 16:44	0	1	6	7	5	1	0	0	0	0	0	0	0	0	0	**20**
16:45 - 16:59	0	0	2	13	4	2	0	0	0	0	0	0	0	0	0	**21**
17:00 - 17:14	0	0	9	6	8	0	0	0	0	0	0	0	0	0	0	**23**
17:15 - 17:29	0	1	5	13	5	1	0	0	0	0	0	0	0	0	0	**25**
17:30 - 17:44	0	1	4	13	7	1	0	0	0	0	0	0	0	0	0	**26**
17:45 - 17:59	0	0	1	8	1	1	0	0	0	0	0	0	0	0	0	**11**
18:00 - 18:14	1	0	7	10	7	0	0	0	0	0	0	0	0	0	0	**25**
18:15 - 18:29	0	0	2	7	5	0	0	0	0	0	0	0	0	0	0	**14**
18:30 - 18:44	0	0	5	15	5	0	0	0	0	0	0	0	0	0	0	**25**
18:45 - 18:59	0	0	2	12	4	0	0	0	0	0	1	0	0	0	0	**19**
19:00 - 19:14	0	1	7	8	6	2	0	0	0	0	0	0	0	0	0	**24**
19:15 - 19:29	0	0	2	13	8	0	0	0	0	0	0	0	0	0	0	**23**
19:30 - 19:44	0	0	8	8	0	0	0	0	0	0	0	0	0	0	0	**16**
19:45 - 19:59	0	0	3	11	0	0	0	0	0	0	0	0	0	0	0	**14**
20:00 - 20:14	0	0	2	9	1	0	0	0	0	0	0	0	0	0	0	**12**
20:15 - 20:29	0	2	1	2	1	0	0	0	0	0	0	0	0	0	0	**6**
20:30 - 20:44	0	0	3	2	1	0	0	0	0	0	0	0	0	0	0	**6**
20:45 - 20:59	0	0	3	8	5	0	0	0	0	0	0	0	0	0	0	**16**
21:00 - 21:14	0	0	0	4	0	0	0	0	0	0	0	0	0	0	0	**4**
21:15 - 21:29	0	0	2	3	3	0	0	0	0	0	0	0	0	0	0	**8**
21:30 - 21:44	0	0	0	6	0	0	0	0	0	0	0	0	0	0	0	**6**
21:45 - 21:59	0	0	1	1	0	0	0	0	0	0	0	0	0	0	0	**2**
22:00 - 22:14	0	0	1	7	2	0	0	0	0	0	0	0	0	0	0	**10**
22:15 - 22:29	0	0	0	5	0	0	0	0	0	0	0	0	0	0	0	**5**
22:30 - 22:44	0	0	1	4	0	0	0	0	0	0	0	0	0	0	0	**5**
22:45 - 22:59	0	0	1	1	0	0	0	0	0	0	0	0	0	0	0	**2**
23:00 - 23:14	0	0	0	4	1	0	0	0	0	0	0	0	0	0	0	**5**
23:15 - 23:29	0	0	0	3	1	0	0	0	0	0	0	0	0	0	0	**4**
23:30 - 23:44	0	0	0	1	1	1	0	0	0	0	0	0	0	0	0	**3**
23:45 - 23:59	0	0	0	0	0	0	0	0	0	0	0	0	0	0	0	**0**
Totals	**7**	**29**	**274**	**711**	**378**	**18**	**0**	**1**	**1**	**0**	**1**	**0**	**0**	**0**	**0**	**1420**
Percent of Total	**0.5**	**2.0**	**19.3**	**50.1**	**26.6**	**1.3**	**0.0**	**0.1**	**0.1**	**0.0**	**0.1**	**0.0**	**0.0**	**0.0**	**0.0**	**100**
Percent of AM	**0.6**	**1.9**	**18.1**	**48.4**	**29.8**	**1.1**	**0.0**	**0.0**	**0.0**	**0.0**	**0.0**	**0.0**	**0.0**	**0.0**	**0.0**	**100**
Percent of PM	**0.4**	**2.2**	**20.3**	**51.4**	**24.1**	**1.4**	**0.0**	**0.1**	**0.1**	**0.0**	**0.1**	**0.0**	**0.0**	**0.0**	**0.0**	**100**

Daily Eastbound Speeds (MPH)

Study Date: Thursday, 09/20/2018
Unit ID: 0163
Location: SW 12TH ST / E OF SW 70TH AVE

Standard Deviation:	4.5 MPH	Ten Mile Pace:	15 to 24 MPH	85th Percentile:	22.9 MPH
Mean Speed:	18.3 MPH	Percent in Ten Mile Pace:	76.7%	15th Percentile:	13.9 MPH
Median Speed:	18.4 MPH			90th Percentile:	24.1 MPH
Modal Speed:	18.0 MPH			95th Percentile:	25.2 MPH

Daily Westbound Speeds (MPH)

Study Date: Tuesday, 09/18/2018
Unit ID: 0163
Location: SW 12TH ST / E OF SW 70TH AVE

	0-5	5-10	10-15	15-20	20-25	25-30	30-35	35-40	40-45	45-50	50-55	55-60	60-65	65-70	70-75	Total
00:00 - 00:14	0	0	0	2	0	0	0	0	0	0	0	0	0	0	0	**2**
00:15 - 00:29	0	0	0	0	3	0	0	0	0	0	0	0	0	0	0	**3**
00:30 - 00:44	0	0	1	0	0	0	0	0	0	0	0	0	0	0	0	**1**
00:45 - 00:59	0	0	0	0	0	0	0	0	0	0	0	0	0	0	0	**0**
01:00 - 01:14	0	0	0	1	2	0	0	0	0	0	0	0	0	0	0	**3**
01:15 - 01:29	0	0	0	0	0	0	0	0	0	0	0	0	0	0	0	**0**
01:30 - 01:44	0	0	0	0	0	0	0	0	0	0	0	0	0	0	0	**0**
01:45 - 01:59	0	0	0	0	0	0	0	0	0	0	0	0	0	0	0	**0**
02:00 - 02:14	0	0	0	1	1	0	0	0	0	0	0	0	0	0	0	**2**
02:15 - 02:29	0	0	0	0	0	0	0	0	0	0	0	0	0	0	0	**0**
02:30 - 02:44	0	0	0	0	0	0	0	0	0	0	0	0	0	0	0	**0**
02:45 - 02:59	0	0	0	0	0	0	0	0	0	0	0	0	0	0	0	**0**
03:00 - 03:14	0	0	0	0	0	0	0	0	0	0	0	0	0	0	0	**0**
03:15 - 03:29	0	0	0	0	0	0	0	0	0	0	0	0	0	0	0	**0**
03:30 - 03:44	0	0	0	1	0	0	0	0	0	0	0	0	0	0	0	**1**
03:45 - 03:59	0	0	0	0	0	0	0	0	0	0	0	0	0	0	0	**0**
04:00 - 04:14	0	0	0	0	1	0	0	0	0	0	0	0	0	0	0	**1**
04:15 - 04:29	0	0	0	0	0	0	0	0	0	0	0	0	0	0	0	**0**
04:30 - 04:44	0	0	0	0	0	0	0	0	0	0	0	0	0	0	0	**0**
04:45 - 04:59	0	0	0	0	0	0	0	0	0	0	0	0	0	0	0	**0**
05:00 - 05:14	0	0	0	0	0	0	0	0	0	0	0	0	0	0	0	**0**
05:15 - 05:29	0	0	1	0	1	1	0	0	0	0	0	0	0	0	0	**3**
05:30 - 05:44	0	0	0	4	0	0	0	0	0	0	0	0	0	0	0	**4**
05:45 - 05:59	0	0	0	4	1	0	0	0	0	0	0	0	0	0	0	**5**
06:00 - 06:14	0	0	1	0	3	3	0	0	0	0	0	0	0	0	0	**7**
06:15 - 06:29	0	0	0	8	7	0	0	0	0	0	0	0	0	0	0	**15**
06:30 - 06:44	0	0	1	10	7	0	0	0	0	0	0	0	0	0	0	**18**
06:45 - 06:59	0	1	0	5	6	0	0	0	0	0	0	0	0	0	0	**12**
07:00 - 07:14	0	2	2	5	3	1	0	0	0	0	0	0	0	0	0	**13**
07:15 - 07:29	0	2	3	17	15	4	1	0	0	0	0	0	0	0	0	**42**
07:30 - 07:44	0	1	0	11	10	4	0	0	0	0	0	0	0	0	0	**26**
07:45 - 07:59	0	0	2	14	11	7	0	0	0	0	0	0	0	0	0	**34**
08:00 - 08:14	0	1	3	20	18	1	0	0	0	0	0	0	0	0	0	**43**
08:15 - 08:29	0	1	7	13	9	2	0	0	0	0	0	0	0	0	0	**32**
08:30 - 08:44	0	1	2	9	12	2	0	0	0	0	0	0	0	0	0	**26**
08:45 - 08:59	0	0	1	9	10	1	0	0	0	0	0	0	0	0	0	**21**
09:00 - 09:14	0	1	3	12	9	0	0	0	0	0	0	0	0	0	0	**25**
09:15 - 09:29	0	1	3	10	7	0	0	0	0	0	0	0	0	0	0	**21**
09:30 - 09:44	0	2	4	11	15	2	0	1	0	0	0	0	0	0	0	**35**
09:45 - 09:59	0	1	3	16	14	0	0	0	0	0	0	0	0	0	0	**34**
10:00 - 10:14	2	0	6	10	9	1	0	0	0	0	0	0	0	0	0	**28**
10:15 - 10:29	0	0	4	15	12	1	0	0	0	0	0	0	0	0	0	**32**
10:30 - 10:44	0	2	3	17	8	2	2	0	0	0	0	0	0	0	0	**34**
10:45 - 10:59	0	0	2	11	11	0	0	0	0	0	0	0	0	0	0	**24**
11:00 - 11:14	0	1	2	11	6	0	0	0	0	0	0	0	0	0	0	**20**
11:15 - 11:29	0	0	0	14	17	3	0	0	0	0	0	0	0	0	0	**34**
11:30 - 11:44	0	0	6	14	13	0	0	0	0	0	0	0	0	0	0	**33**
11:45 - 11:59	0	1	2	11	7	2	0	0	0	0	0	0	0	0	0	**23**
12:00 - 12:14	0	1	2	12	11	2	0	0	0	0	0	0	0	0	0	**28**
12:15 - 12:29	0	0	3	16	11	2	0	0	0	0	0	0	0	0	0	**32**
12:30 - 12:44	0	0	5	19	8	1	0	0	0	0	0	0	0	0	0	**33**

Printed: 09/22/2018 at 10:46
TrafficViewer Pro v1.6.4.124
PicoCount 2500 V2.37 (s/n# 17032270)

Daily Westbound Speeds (MPH)

Study Date: Tuesday, 09/18/2018
Unit ID: 0163
Location: SW 12TH ST / E OF SW 70TH AVE

	0-5	5-10	10-15	15-20	20-25	25-30	30-35	35-40	40-45	45-50	50-55	55-60	60-65	65-70	70-75	Total
12:45 - 12:59	0	0	2	14	16	0	0	0	0	0	0	0	0	0	0	**32**
13:00 - 13:14	0	0	3	28	10	1	0	0	0	0	0	0	0	0	0	**42**
13:15 - 13:29	0	0	3	14	11	2	0	0	0	0	0	0	0	0	0	**30**
13:30 - 13:44	0	0	3	11	12	4	0	0	0	0	0	0	0	0	0	**30**
13:45 - 13:59	0	0	8	10	12	3	0	0	0	0	0	0	0	0	0	**33**
14:00 - 14:14	0	0	4	20	15	2	0	0	0	0	0	0	0	0	0	**41**
14:15 - 14:29	0	0	4	20	17	2	1	0	0	0	0	0	0	0	0	**44**
14:30 - 14:44	0	0	4	14	20	0	0	0	0	0	0	0	0	0	0	**38**
14:45 - 14:59	0	0	0	15	11	1	0	0	0	0	0	0	0	0	0	**27**
15:00 - 15:14	0	2	3	12	17	1	0	0	0	0	0	0	0	0	0	**35**
15:15 - 15:29	1	0	4	20	10	2	0	0	0	0	0	0	0	0	0	**37**
15:30 - 15:44	0	0	0	24	30	1	0	0	0	0	0	0	0	0	0	**55**
15:45 - 15:59	0	0	3	23	22	0	0	0	0	0	0	0	0	0	0	**48**
16:00 - 16:14	0	0	5	25	14	3	0	0	0	0	0	0	0	0	0	**47**
16:15 - 16:29	0	1	7	22	18	6	0	0	0	0	0	0	0	0	0	**54**
16:30 - 16:44	0	2	10	27	21	2	0	0	0	0	0	0	0	0	0	**62**
16:45 - 16:59	0	2	4	32	20	2	0	1	0	0	0	0	0	0	0	**61**
17:00 - 17:14	0	0	11	49	31	1	0	0	0	0	0	0	0	0	0	**92**
17:15 - 17:29	0	0	5	27	41	9	0	0	0	0	0	0	0	0	0	**82**
17:30 - 17:44	0	1	7	34	42	4	1	0	0	0	0	0	0	0	0	**89**
17:45 - 17:59	0	0	5	33	38	9	0	0	0	0	0	0	0	0	0	**85**
18:00 - 18:14	0	0	3	35	40	3	0	0	0	0	0	0	0	0	0	**81**
18:15 - 18:29	0	0	3	26	35	7	0	0	0	0	0	0	0	0	0	**71**
18:30 - 18:44	0	1	3	14	30	4	0	0	0	0	0	0	0	0	0	**52**
18:45 - 18:59	0	0	3	29	20	0	0	0	0	0	0	0	0	0	0	**52**
19:00 - 19:14	0	0	7	15	16	3	0	0	0	0	0	0	0	0	0	**41**
19:15 - 19:29	1	3	4	14	10	0	0	0	0	0	0	0	0	0	0	**32**
19:30 - 19:44	0	0	4	15	16	0	0	0	0	0	0	0	0	0	0	**35**
19:45 - 19:59	1	1	4	12	10	0	0	0	0	0	0	0	0	0	0	**28**
20:00 - 20:14	0	0	8	11	9	0	1	0	0	0	0	0	0	0	0	**29**
20:15 - 20:29	0	1	1	7	10	0	0	0	0	0	0	0	0	0	0	**19**
20:30 - 20:44	0	0	2	6	10	1	0	0	0	0	0	0	0	0	0	**19**
20:45 - 20:59	0	0	4	3	7	0	0	0	0	0	0	0	0	0	0	**14**
21:00 - 21:14	0	0	1	5	3	1	0	0	0	0	0	0	0	0	0	**10**
21:15 - 21:29	0	0	1	4	6	0	0	0	0	0	0	0	0	0	0	**11**
21:30 - 21:44	0	0	2	6	7	1	0	0	0	0	0	0	0	0	0	**16**
21:45 - 21:59	0	0	0	12	6	1	0	0	0	0	0	0	0	0	0	**19**
22:00 - 22:14	0	0	2	2	2	0	0	0	0	0	0	0	0	0	0	**6**
22:15 - 22:29	0	0	0	5	1	0	0	0	0	0	0	0	0	0	0	**6**
22:30 - 22:44	0	0	0	3	5	0	0	0	0	0	0	0	0	0	0	**8**
22:45 - 22:59	0	0	0	5	0	0	0	0	0	0	0	0	0	0	0	**5**
23:00 - 23:14	0	0	0	6	6	0	0	0	0	0	0	0	0	0	0	**12**
23:15 - 23:29	0	0	0	1	5	0	0	0	0	0	0	0	0	0	0	**6**
23:30 - 23:44	0	0	0	2	2	0	0	0	0	0	0	0	0	0	0	**4**
23:45 - 23:59	0	0	0	1	0	1	0	0	0	0	0	0	0	0	0	**2**
Totals	**5**	**33**	**219**	**1046**	**962**	**119**	**6**	**2**	**0**	**0**	**0**	**0**	**0**	**0**	**0**	**2392**
Percent of Total	**0.2**	**1.4**	**9.2**	**43.7**	**40.2**	**5.0**	**0.3**	**0.1**	**0.0**	**0.0**	**0.0**	**0.0**	**0.0**	**0.0**	**0.0**	**100**
Percent of AM	**0.3**	**2.7**	**9.4**	**43.5**	**37.7**	**5.6**	**0.5**	**0.2**	**0.0**	**0.0**	**0.0**	**0.0**	**0.0**	**0.0**	**0.0**	**100**
Percent of PM	**0.2**	**0.9**	**9.0**	**43.8**	**41.2**	**4.7**	**0.2**	**0.1**	**0.0**	**0.0**	**0.0**	**0.0**	**0.0**	**0.0**	**0.0**	**100**

Daily Westbound Speeds (MPH)

Study Date: Tuesday, 09/18/2018
Unit ID: 0163
Location: SW 12TH ST / E OF SW 70TH AVE

Standard Deviation:	4.4 MPH	Ten Mile Pace:	15 to 24 MPH	85th Percentile:	24.6 MPH
Mean Speed:	19.9 MPH	Percent in Ten Mile Pace:	83.9%	15th Percentile:	15.6 MPH
Median Speed:	20.4 MPH			90th Percentile:	25.3 MPH
Modal Speed:	18.0 MPH			95th Percentile:	25.3 MPH

Daily Westbound Speeds (MPH)

Study Date: Wednesday, 09/19/2018
Unit ID: 0163
Location: SW 12TH ST / E OF SW 70TH AVE

	0-5	5-10	10-15	15-20	20-25	25-30	30-35	35-40	40-45	45-50	50-55	55-60	60-65	65-70	70-75	Total
00:00 - 00:14	0	0	0	1	1	1	0	0	0	0	0	0	0	0	0	**3**
00:15 - 00:29	0	0	0	0	3	1	0	0	0	0	0	0	0	0	0	**4**
00:30 - 00:44	0	0	0	0	1	0	0	0	0	0	0	0	0	0	0	**1**
00:45 - 00:59	0	0	0	0	1	0	0	0	0	0	0	0	0	0	0	**1**
01:00 - 01:14	0	0	0	1	0	0	0	0	0	0	0	0	0	0	0	**1**
01:15 - 01:29	0	0	0	0	1	0	0	0	0	0	0	0	0	0	0	**1**
01:30 - 01:44	0	0	0	1	0	0	0	0	0	0	0	0	0	0	0	**1**
01:45 - 01:59	0	0	0	0	0	0	0	0	0	0	0	0	0	0	0	**0**
02:00 - 02:14	0	0	0	1	1	0	0	0	0	0	0	0	0	0	0	**2**
02:15 - 02:29	0	0	0	1	0	0	0	0	0	0	0	0	0	0	0	**1**
02:30 - 02:44	0	0	0	0	0	0	0	0	0	0	0	0	0	0	0	**0**
02:45 - 02:59	0	0	0	1	0	0	0	0	0	0	0	0	0	0	0	**1**
03:00 - 03:14	0	0	0	0	0	0	0	0	0	0	0	0	0	0	0	**0**
03:15 - 03:29	0	0	0	0	0	0	0	0	0	0	0	0	0	0	0	**0**
03:30 - 03:44	0	0	0	0	0	0	0	0	0	0	0	0	0	0	0	**0**
03:45 - 03:59	0	0	0	0	1	0	0	0	0	0	0	0	0	0	0	**1**
04:00 - 04:14	0	0	0	0	0	0	0	0	0	0	0	0	0	0	0	**0**
04:15 - 04:29	0	0	0	0	0	0	0	0	0	0	0	0	0	0	0	**0**
04:30 - 04:44	0	0	0	0	0	0	0	0	0	0	0	0	0	0	0	**0**
04:45 - 04:59	0	0	1	0	0	0	0	0	0	0	0	0	0	0	0	**1**
05:00 - 05:14	0	0	0	0	1	0	0	0	0	0	0	0	0	0	0	**1**
05:15 - 05:29	0	0	0	1	0	0	0	0	0	0	0	0	0	0	0	**1**
05:30 - 05:44	0	0	0	1	0	0	0	0	0	0	0	0	0	0	0	**1**
05:45 - 05:59	0	0	0	3	2	0	0	0	0	0	0	0	0	0	0	**5**
06:00 - 06:14	0	0	0	1	3	0	0	0	0	0	0	0	0	0	0	**4**
06:15 - 06:29	0	0	0	4	6	1	0	0	0	0	0	0	0	0	0	**11**
06:30 - 06:44	0	0	2	6	6	2	0	0	0	0	0	0	0	0	0	**16**
06:45 - 06:59	0	0	2	6	6	1	0	0	0	0	0	0	0	0	0	**15**
07:00 - 07:14	0	1	2	5	12	3	0	0	0	0	0	0	0	0	0	**23**
07:15 - 07:29	0	0	4	9	9	1	0	0	0	0	0	0	0	0	0	**23**
07:30 - 07:44	0	0	3	11	14	1	0	0	0	0	0	0	0	0	0	**29**
07:45 - 07:59	0	0	2	15	16	1	0	0	0	0	0	0	0	0	0	**34**
08:00 - 08:14	0	0	3	12	13	1	0	0	0	0	0	0	0	0	0	**29**
08:15 - 08:29	0	1	1	15	9	1	0	0	0	0	0	0	0	0	0	**27**
08:30 - 08:44	0	0	2	9	17	2	0	0	0	0	0	0	0	0	0	**30**
08:45 - 08:59	0	0	1	13	8	3	0	0	1	0	0	0	0	0	0	**26**
09:00 - 09:14	0	1	1	12	7	1	0	0	0	0	0	0	0	0	0	**22**
09:15 - 09:29	0	1	4	8	13	0	1	0	0	0	0	0	0	0	0	**27**
09:30 - 09:44	0	0	3	18	14	0	1	0	0	0	0	0	0	0	0	**36**
09:45 - 09:59	0	1	7	21	12	2	1	0	0	0	0	0	0	0	0	**44**
10:00 - 10:14	0	0	2	15	14	1	0	0	0	0	0	0	0	0	0	**32**
10:15 - 10:29	0	0	3	10	15	2	1	0	0	0	0	0	0	0	0	**31**
10:30 - 10:44	0	1	3	5	12	1	0	0	0	0	0	0	0	0	0	**22**
10:45 - 10:59	0	0	3	12	10	0	0	0	0	0	0	0	0	0	0	**25**
11:00 - 11:14	0	1	1	16	11	0	0	0	0	0	0	0	0	0	0	**29**
11:15 - 11:29	0	1	8	20	8	1	0	0	0	0	0	0	0	0	0	**38**
11:30 - 11:44	0	0	1	13	16	0	0	0	0	0	0	0	0	0	0	**30**
11:45 - 11:59	0	0	2	22	13	0	0	0	0	0	0	0	0	0	0	**37**
12:00 - 12:14	0	0	6	11	14	3	0	0	0	0	0	0	0	0	0	**34**
12:15 - 12:29	0	0	5	10	19	1	0	0	0	0	0	0	0	0	0	**35**
12:30 - 12:44	0	0	3	15	28	1	0	0	0	0	0	0	0	0	0	**47**

Daily Westbound Speeds (MPH)

Study Date: Wednesday, 09/19/2018
Unit ID: 0163
Location: SW 12TH ST / E OF SW 70TH AVE

	0-5	5-10	10-15	15-20	20-25	25-30	30-35	35-40	40-45	45-50	50-55	55-60	60-65	65-70	70-75	Total
12:45 - 12:59	0	1	7	16	14	1	0	0	0	0	0	0	0	0	0	**39**
13:00 - 13:14	0	0	5	15	13	1	1	0	0	0	0	0	0	0	0	**35**
13:15 - 13:29	0	0	2	11	16	8	1	0	0	0	0	0	0	0	0	**38**
13:30 - 13:44	0	0	3	11	22	4	1	0	0	0	0	0	0	0	0	**41**
13:45 - 13:59	0	0	1	16	12	3	0	0	0	0	0	0	0	0	0	**32**
14:00 - 14:14	0	0	3	17	11	2	0	0	0	0	0	0	0	0	0	**33**
14:15 - 14:29	0	1	5	13	17	1	0	0	0	0	0	0	0	0	0	**37**
14:30 - 14:44	0	0	3	17	16	0	2	0	0	0	0	0	0	0	0	**38**
14:45 - 14:59	0	1	2	25	13	3	0	1	0	0	0	0	0	0	0	**45**
15:00 - 15:14	0	1	4	19	13	3	0	0	0	0	0	0	0	0	0	**40**
15:15 - 15:29	0	1	4	9	23	3	0	0	0	0	0	0	0	0	0	**40**
15:30 - 15:44	0	0	3	21	22	8	0	0	0	0	0	0	0	0	0	**54**
15:45 - 15:59	0	0	3	15	22	2	1	0	0	0	0	0	1	0	0	**44**
16:00 - 16:14	0	0	2	17	16	2	0	0	0	0	0	0	0	0	0	**37**
16:15 - 16:29	0	0	1	18	34	4	0	0	0	0	0	0	0	0	0	**57**
16:30 - 16:44	0	0	4	21	25	2	1	0	0	0	0	0	0	0	0	**53**
16:45 - 16:59	0	1	1	33	27	4	0	0	0	0	0	0	0	0	0	**66**
17:00 - 17:14	1	2	13	29	27	3	0	0	0	0	0	0	0	0	0	**75**
17:15 - 17:29	0	1	9	16	30	2	0	0	0	0	0	0	0	0	0	**58**
17:30 - 17:44	0	2	3	31	39	4	0	0	0	0	0	0	0	0	0	**79**
17:45 - 17:59	0	1	4	26	31	1	0	0	0	0	0	0	0	0	0	**63**
18:00 - 18:14	0	1	5	23	31	1	1	0	0	0	0	0	0	0	0	**62**
18:15 - 18:29	0	1	1	21	23	3	0	0	0	0	0	0	0	0	0	**49**
18:30 - 18:44	0	1	6	23	15	2	0	0	0	0	0	0	0	0	0	**47**
18:45 - 18:59	0	0	5	21	17	2	1	0	0	0	0	0	0	0	0	**46**
19:00 - 19:14	0	1	4	22	16	4	0	0	0	0	0	0	0	0	0	**47**
19:15 - 19:29	0	0	1	11	13	1	1	0	0	0	0	0	0	0	0	**27**
19:30 - 19:44	0	0	6	23	9	3	0	0	0	0	0	0	0	0	0	**41**
19:45 - 19:59	0	0	2	12	19	0	0	0	0	0	0	0	0	0	0	**33**
20:00 - 20:14	0	0	3	8	10	0	0	0	0	0	0	0	0	0	0	**21**
20:15 - 20:29	0	0	2	6	6	2	0	0	0	0	0	0	0	0	0	**16**
20:30 - 20:44	0	0	2	9	6	0	0	0	0	0	0	0	0	0	0	**17**
20:45 - 20:59	0	0	2	2	6	1	0	0	0	0	0	0	0	0	0	**11**
21:00 - 21:14	0	0	6	9	6	1	0	0	0	0	0	0	0	0	0	**22**
21:15 - 21:29	0	0	3	12	12	0	0	0	0	0	0	0	0	0	0	**27**
21:30 - 21:44	0	0	2	5	8	1	0	0	0	0	0	0	0	0	0	**16**
21:45 - 21:59	0	0	2	5	3	1	0	0	0	0	0	0	0	0	0	**11**
22:00 - 22:14	0	1	0	4	4	1	0	0	0	0	0	0	0	0	0	**10**
22:15 - 22:29	0	0	2	6	2	1	0	0	0	0	0	0	0	0	0	**11**
22:30 - 22:44	0	0	0	2	8	0	0	0	0	0	0	0	0	0	0	**10**
22:45 - 22:59	0	0	2	0	2	0	0	0	0	0	0	0	0	0	0	**4**
23:00 - 23:14	0	0	1	0	5	0	0	0	0	0	0	0	0	0	0	**6**
23:15 - 23:29	0	0	0	3	2	0	0	0	0	0	0	0	0	0	0	**5**
23:30 - 23:44	0	0	0	3	1	0	0	0	0	0	0	0	0	0	0	**4**
23:45 - 23:59	0	0	0	0	4	0	0	0	0	0	0	0	0	0	0	**4**
Totals	**1**	**25**	**214**	**951**	**1008**	**117**	**14**	**1**	**1**	**0**	**0**	**0**	**1**	**0**	**0**	**2333**
Percent of Total	**0.0**	**1.1**	**9.2**	**40.8**	**43.2**	**5.0**	**0.6**	**0.0**	**0.0**	**0.0**	**0.0**	**0.0**	**0.0**	**0.0**	**0.0**	**100**
Percent of AM	**0.0**	**1.2**	**9.2**	**43.4**	**41.4**	**4.1**	**0.6**	**0.0**	**0.2**	**0.0**	**0.0**	**0.0**	**0.0**	**0.0**	**0.0**	**100**
Percent of PM	**0.1**	**1.0**	**9.2**	**39.7**	**43.9**	**5.4**	**0.6**	**0.1**	**0.0**	**0.0**	**0.0**	**0.0**	**0.1**	**0.0**	**0.0**	**100**

Daily Westbound Speeds (MPH)

Study Date: Wednesday, 09/19/2018
Unit ID: 0163
Location: SW 12TH ST / E OF SW 70TH AVE

Standard Deviation:	4.5 MPH	Ten Mile Pace:	15 to 24 MPH	85th Percentile:	24.7 MPH
Mean Speed:	20.2 MPH	Percent in Ten Mile Pace:	84.0%		
Median Speed:	20.8 MPH			15th Percentile:	15.7 MPH
Modal Speed:	23.0 MPH			90th Percentile:	25.4 MPH
				95th Percentile:	25.9 MPH

Daily Westbound Speeds (MPH)

Study Date: Thursday, 09/20/2018
Unit ID: 0163
Location: SW 12TH ST / E OF SW 70TH AVE

	0-5	5-10	10-15	15-20	20-25	25-30	30-35	35-40	40-45	45-50	50-55	55-60	60-65	65-70	70-75	Total
00:00 - 00:14	0	0	0	0	0	0	0	0	0	0	0	0	0	0	0	**0**
00:15 - 00:29	0	0	0	0	0	0	0	0	0	0	0	0	0	0	0	**0**
00:30 - 00:44	0	0	1	3	1	0	0	0	0	0	0	0	0	0	0	**5**
00:45 - 00:59	0	0	0	0	1	0	0	0	0	0	0	0	0	0	0	**1**
01:00 - 01:14	0	0	0	0	0	0	0	0	0	0	0	0	0	0	0	**0**
01:15 - 01:29	0	0	0	1	0	0	0	0	0	0	0	0	0	0	0	**1**
01:30 - 01:44	0	0	0	0	0	0	0	0	0	0	0	0	0	0	0	**0**
01:45 - 01:59	0	0	1	0	0	0	0	0	0	0	0	0	0	0	0	**1**
02:00 - 02:14	0	0	0	0	0	0	0	0	0	0	0	0	0	0	0	**0**
02:15 - 02:29	0	0	0	0	0	0	0	0	0	0	0	0	0	0	0	**0**
02:30 - 02:44	0	0	0	0	0	0	0	0	0	0	0	0	0	0	0	**0**
02:45 - 02:59	0	0	0	0	0	0	0	0	0	0	0	0	0	0	0	**0**
03:00 - 03:14	0	0	0	1	0	0	0	0	0	0	0	0	0	0	0	**1**
03:15 - 03:29	0	0	0	1	0	0	0	0	0	0	0	0	0	0	0	**1**
03:30 - 03:44	0	0	0	0	0	0	0	0	0	0	0	0	0	0	0	**0**
03:45 - 03:59	0	0	0	1	0	0	0	0	0	0	0	0	0	0	0	**1**
04:00 - 04:14	0	0	0	0	0	0	0	0	0	0	0	0	0	0	0	**0**
04:15 - 04:29	0	0	0	1	0	0	0	0	0	0	0	0	0	0	0	**1**
04:30 - 04:44	0	0	0	0	0	0	0	0	0	0	0	0	0	0	0	**0**
04:45 - 04:59	0	0	0	0	0	0	0	0	0	0	0	0	0	0	0	**0**
05:00 - 05:14	0	0	0	0	0	0	0	0	0	0	0	0	0	0	0	**0**
05:15 - 05:29	0	0	1	0	0	0	0	0	0	0	0	0	0	0	0	**1**
05:30 - 05:44	0	0	1	2	1	0	0	0	0	0	0	0	0	0	0	**4**
05:45 - 05:59	0	0	0	2	0	0	0	0	0	0	0	0	0	0	0	**2**
06:00 - 06:14	0	0	0	4	2	0	0	0	0	0	0	0	0	0	0	**6**
06:15 - 06:29	0	0	1	6	5	1	0	0	0	0	0	0	0	0	0	**13**
06:30 - 06:44	0	0	2	10	6	0	0	0	0	0	0	0	0	0	0	**18**
06:45 - 06:59	0	0	3	6	4	2	0	0	0	0	0	0	0	0	0	**15**
07:00 - 07:14	0	1	4	5	5	1	0	0	0	0	0	0	0	0	0	**16**
07:15 - 07:29	0	1	3	20	12	2	0	0	0	0	0	0	0	0	0	**38**
07:30 - 07:44	0	0	2	17	11	3	1	0	0	0	0	0	0	0	0	**34**
07:45 - 07:59	0	0	3	19	18	1	0	0	0	0	0	0	0	0	0	**41**
08:00 - 08:14	0	1	4	17	18	4	1	0	0	1	0	0	0	0	0	**46**
08:15 - 08:29	0	1	3	15	11	2	0	0	0	0	0	0	0	0	0	**32**
08:30 - 08:44	0	0	1	10	14	2	0	0	0	0	0	0	0	0	0	**27**
08:45 - 08:59	0	0	1	14	17	3	0	0	0	0	0	0	0	0	0	**35**
09:00 - 09:14	3	0	3	13	5	2	0	0	0	0	0	0	0	0	0	**26**
09:15 - 09:29	0	0	5	10	11	2	0	1	0	0	0	0	0	0	0	**29**
09:30 - 09:44	0	0	3	17	8	2	0	0	0	0	0	0	0	0	0	**30**
09:45 - 09:59	1	0	6	15	12	1	0	0	0	0	0	0	0	0	0	**35**
10:00 - 10:14	0	0	2	12	12	0	0	0	0	0	0	0	0	0	0	**26**
10:15 - 10:29	0	0	2	20	7	1	0	0	0	0	0	0	0	0	0	**30**
10:30 - 10:44	0	0	4	9	15	3	0	0	0	0	0	0	0	0	0	**31**
10:45 - 10:59	0	0	0	13	16	2	0	0	0	0	0	0	0	0	0	**31**
11:00 - 11:14	0	0	4	11	10	1	0	1	0	0	0	0	0	0	0	**27**
11:15 - 11:29	0	0	6	12	11	0	0	0	0	0	0	0	0	0	0	**29**
11:30 - 11:44	0	1	5	14	11	1	0	0	0	0	0	0	0	0	0	**32**
11:45 - 11:59	0	0	9	8	6	1	0	0	0	0	0	0	0	0	0	**24**
12:00 - 12:14	0	0	1	9	13	2	0	0	0	0	0	0	0	0	0	**25**
12:15 - 12:29	0	0	4	18	14	0	0	0	0	0	0	0	0	0	0	**36**
12:30 - 12:44	0	0	2	12	16	0	0	0	0	0	0	0	0	0	0	**30**

Daily Westbound Speeds (MPH)

Study Date: Thursday, 09/20/2018
Unit ID: 0163
Location: SW 12TH ST / E OF SW 70TH AVE

	0-5	5-10	10-15	15-20	20-25	25-30	30-35	35-40	40-45	45-50	50-55	55-60	60-65	65-70	70-75	Total
12:45 - 12:59	0	1	5	15	17	1	0	0	0	0	0	0	0	0	0	**39**
13:00 - 13:14	0	0	4	12	14	2	0	0	0	0	0	0	0	0	0	**32**
13:15 - 13:29	0	0	1	10	14	1	0	0	0	0	0	0	0	0	0	**26**
13:30 - 13:44	0	0	6	12	14	4	0	0	0	0	0	0	0	0	0	**36**
13:45 - 13:59	0	0	1	17	8	4	0	0	0	0	0	0	0	0	0	**30**
14:00 - 14:14	0	0	4	20	12	2	0	0	0	0	0	0	0	0	0	**38**
14:15 - 14:29	0	2	3	10	17	4	0	0	0	0	0	0	0	0	0	**36**
14:30 - 14:44	1	3	0	25	14	0	0	0	0	0	0	0	0	0	0	**43**
14:45 - 14:59	0	0	6	15	16	1	0	0	0	0	0	0	0	0	0	**38**
15:00 - 15:14	0	0	2	18	18	2	0	0	0	1	0	0	0	0	0	**41**
15:15 - 15:29	0	0	7	28	23	2	0	0	0	0	0	0	0	0	0	**60**
15:30 - 15:44	0	0	2	10	14	2	0	0	0	0	0	0	0	0	0	**28**
15:45 - 15:59	0	1	1	25	20	2	0	0	0	0	0	0	0	0	0	**49**
16:00 - 16:14	0	0	4	21	26	3	0	0	0	0	0	0	0	0	0	**54**
16:15 - 16:29	0	1	2	15	17	5	0	0	0	0	0	0	0	0	0	**40**
16:30 - 16:44	0	0	5	21	20	5	0	0	0	0	0	0	0	0	0	**51**
16:45 - 16:59	0	0	6	22	20	3	0	0	0	0	0	0	0	0	0	**51**
17:00 - 17:14	0	2	16	28	26	3	0	0	0	0	0	0	0	0	0	**75**
17:15 - 17:29	0	0	4	33	34	6	1	0	0	0	0	0	0	0	0	**78**
17:30 - 17:44	0	0	4	22	39	4	0	0	0	0	0	0	0	0	0	**69**
17:45 - 17:59	0	0	4	25	48	7	0	0	0	0	0	0	0	0	0	**84**
18:00 - 18:14	1	0	9	24	31	3	0	0	0	0	0	0	0	0	0	**68**
18:15 - 18:29	0	0	6	15	25	0	0	0	0	0	0	0	0	0	0	**46**
18:30 - 18:44	0	0	3	21	15	0	0	0	0	0	0	0	0	0	0	**39**
18:45 - 18:59	0	0	3	19	16	2	0	0	0	0	0	0	0	0	0	**40**
19:00 - 19:14	0	2	0	14	14	2	0	0	0	0	0	0	0	0	0	**32**
19:15 - 19:29	0	0	1	10	17	0	0	0	0	0	0	0	0	0	0	**28**
19:30 - 19:44	0	0	3	10	14	1	0	0	0	0	0	0	0	0	0	**28**
19:45 - 19:59	0	1	2	11	11	0	0	0	0	0	0	0	0	0	0	**25**
20:00 - 20:14	0	0	4	17	8	0	0	0	0	0	0	0	0	0	0	**29**
20:15 - 20:29	0	0	4	5	4	1	0	0	0	0	0	0	0	0	0	**14**
20:30 - 20:44	0	0	3	8	4	0	0	0	0	0	0	0	0	0	0	**15**
20:45 - 20:59	0	0	2	5	6	0	0	0	0	0	0	0	0	0	0	**13**
21:00 - 21:14	0	0	4	4	2	0	0	0	0	0	0	0	0	0	0	**10**
21:15 - 21:29	0	0	1	7	7	0	0	0	0	0	0	0	0	0	0	**15**
21:30 - 21:44	0	0	0	13	7	0	0	0	0	0	0	0	0	0	0	**20**
21:45 - 21:59	0	1	1	9	4	0	0	0	0	0	0	0	0	0	0	**15**
22:00 - 22:14	0	0	0	5	2	1	0	0	0	0	0	0	0	0	0	**8**
22:15 - 22:29	0	0	1	2	2	0	0	0	0	0	0	0	0	0	0	**5**
22:30 - 22:44	0	0	0	4	2	1	0	0	0	0	0	0	0	0	0	**7**
22:45 - 22:59	0	0	1	2	2	1	0	0	0	0	0	0	0	0	0	**6**
23:00 - 23:14	0	0	0	3	2	0	0	0	0	0	0	0	0	0	0	**5**
23:15 - 23:29	0	0	0	2	0	0	0	0	0	0	0	0	0	0	0	**2**
23:30 - 23:44	0	0	1	1	2	0	0	0	0	0	0	0	0	0	0	**4**
23:45 - 23:59	0	0	0	0	2	1	0	0	0	0	0	0	0	0	0	**3**
Totals	**6**	**19**	**223**	**963**	**923**	**115**	**3**	**2**	**0**	**2**	**0**	**0**	**0**	**0**	**0**	**2256**
Percent of Total	**0.3**	**0.8**	**9.9**	**42.7**	**40.9**	**5.1**	**0.1**	**0.1**	**0.0**	**0.1**	**0.0**	**0.0**	**0.0**	**0.0**	**0.0**	**100**
Percent of AM	**0.6**	**0.7**	**11.6**	**44.8**	**36.2**	**5.4**	**0.3**	**0.3**	**0.0**	**0.1**	**0.0**	**0.0**	**0.0**	**0.0**	**0.0**	**100**
Percent of PM	**0.1**	**0.9**	**9.1**	**41.8**	**43.0**	**5.0**	**0.1**	**0.0**	**0.0**	**0.1**	**0.0**	**0.0**	**0.0**	**0.0**	**0.0**	**100**

Daily Westbound Speeds (MPH)

Study Date: Thursday, 09/20/2018
Unit ID: 0163
Location: SW 12TH ST / E OF SW 70TH AVE

Standard Deviation:	4.4 MPH	Ten Mile Pace:	15 to 24 MPH	85th Percentile:	24.6 MPH
Mean Speed:	20.0 MPH	Percent in Ten Mile Pace:	83.6%		
Median Speed:	20.5 MPH			15th Percentile:	15.6 MPH
Modal Speed:	18.0 MPH			90th Percentile:	25.3 MPH
				95th Percentile:	25.5 MPH

Daily Eastbound Speeds (MPH)

Study Date: Tuesday, 09/18/2018
Unit ID: 0176
Location: TAMIAMI TRAIL / W OF SW 69TH ST

	0-5	5-10	10-15	15-20	20-25	25-30	30-35	35-40	40-45	45-50	50-55	55-60	60-65	65-70	70-75	Total
00:00 - 00:14	0	0	0	2	9	9	9	13	8	4	0	0	0	0	0	**54**
00:15 - 00:29	0	0	1	2	7	22	11	9	8	2	0	0	0	0	0	**62**
00:30 - 00:44	0	0	1	0	7	9	15	14	4	2	0	0	0	0	0	**52**
00:45 - 00:59	0	0	1	0	13	11	11	16	6	2	0	0	0	0	0	**60**
01:00 - 01:14	0	0	0	3	6	12	8	6	1	0	0	0	0	0	0	**36**
01:15 - 01:29	0	0	0	1	6	9	4	13	8	0	0	0	0	0	0	**41**
01:30 - 01:44	0	0	0	0	5	4	3	5	4	3	0	0	0	0	0	**24**
01:45 - 01:59	0	0	0	1	6	6	5	11	8	2	0	0	0	0	0	**39**
02:00 - 02:14	0	0	0	2	6	5	7	8	6	0	1	0	0	0	0	**35**
02:15 - 02:29	0	0	0	2	5	4	7	5	4	1	0	0	0	0	0	**28**
02:30 - 02:44	0	0	0	2	1	4	7	3	4	4	0	0	0	0	0	**25**
02:45 - 02:59	0	1	0	4	3	3	4	9	2	1	0	0	0	0	0	**27**
03:00 - 03:14	0	0	1	1	0	2	7	3	4	2	0	0	0	0	0	**20**
03:15 - 03:29	0	0	0	2	4	6	6	4	0	0	0	0	0	0	0	**22**
03:30 - 03:44	0	0	0	8	5	9	8	4	1	2	0	0	0	0	0	**37**
03:45 - 03:59	1	2	1	2	7	3	5	8	5	2	0	0	0	0	0	**36**
04:00 - 04:14	0	0	0	3	6	3	6	9	5	3	0	0	0	0	0	**35**
04:15 - 04:29	0	0	1	1	5	3	7	7	7	4	0	1	0	0	0	**36**
04:30 - 04:44	0	0	0	1	5	12	6	10	6	6	0	0	0	0	0	**46**
04:45 - 04:59	0	0	3	1	8	8	15	11	6	3	0	0	0	0	0	**55**
05:00 - 05:14	0	0	0	3	5	7	21	25	9	3	0	0	0	0	0	**73**
05:15 - 05:29	0	0	1	5	16	19	25	29	10	2	0	0	0	0	0	**107**
05:30 - 05:44	0	2	0	4	23	24	20	35	28	4	0	0	0	0	0	**140**
05:45 - 05:59	0	0	4	2	15	32	66	47	23	3	1	0	0	0	0	**193**
06:00 - 06:14	0	0	3	5	29	44	66	34	11	4	0	0	0	0	0	**196**
06:15 - 06:29	0	0	5	15	83	91	18	18	4	3	0	0	0	0	0	**237**
06:30 - 06:44	0	2	1	20	67	94	41	15	2	2	1	0	0	0	0	**245**
06:45 - 06:59	0	0	2	11	70	150	68	39	14	2	1	0	0	0	0	**357**
07:00 - 07:14	0	2	25	46	154	64	16	2	0	1	0	0	0	0	0	**310**
07:15 - 07:29	0	0	1	13	96	141	62	23	5	0	0	0	0	0	0	**341**
07:30 - 07:44	0	3	8	25	72	127	66	16	5	0	0	0	0	0	0	**322**
07:45 - 07:59	0	1	8	18	87	99	42	22	4	0	0	0	0	0	0	**281**
08:00 - 08:14	0	1	8	33	123	107	27	8	5	1	0	0	0	0	0	**313**
08:15 - 08:29	0	5	4	26	88	98	47	14	6	1	0	0	0	0	0	**289**
08:30 - 08:44	0	0	0	8	78	122	84	29	13	2	0	0	0	0	0	**336**
08:45 - 08:59	5	8	10	30	79	136	34	13	5	0	0	0	0	0	0	**320**
09:00 - 09:14	1	4	11	32	132	90	32	15	1	0	0	0	0	0	0	**318**
09:15 - 09:29	0	4	17	67	118	49	9	5	0	0	0	0	0	0	0	**269**
09:30 - 09:44	1	5	19	74	125	61	12	0	0	0	0	0	0	0	0	**297**
09:45 - 09:59	0	5	13	88	130	42	7	1	0	0	0	1	0	0	0	**287**
10:00 - 10:14	0	9	25	74	106	32	2	1	0	0	0	0	0	0	0	**249**
10:15 - 10:29	1	4	21	59	124	62	33	1	1	0	1	0	0	0	0	**307**
10:30 - 10:44	0	0	9	61	113	43	12	4	2	0	0	0	0	0	0	**244**
10:45 - 10:59	0	3	8	53	134	52	11	2	0	0	0	0	0	0	0	**263**
11:00 - 11:14	0	5	6	29	151	86	32	6	1	0	0	0	0	0	0	**316**
11:15 - 11:29	0	0	11	81	160	56	3	2	0	0	0	0	0	0	0	**313**
11:30 - 11:44	0	2	8	38	154	46	12	0	1	0	0	0	0	0	0	**261**
11:45 - 11:59	0	0	2	56	128	65	15	7	0	0	0	0	0	0	0	**273**
12:00 - 12:14	1	1	15	43	101	76	25	7	0	0	0	0	0	0	0	**269**
12:15 - 12:29	0	0	5	30	114	80	23	8	1	1	0	0	0	0	0	**262**
12:30 - 12:44	0	0	3	42	140	94	19	1	0	0	0	0	0	0	0	**299**

Daily Eastbound Speeds (MPH)

Study Date: Tuesday, 09/18/2018
Unit ID: 0176
Location: TAMIAMI TRAIL / W OF SW 69TH ST

	0-5	5-10	10-15	15-20	20-25	25-30	30-35	35-40	40-45	45-50	50-55	55-60	60-65	65-70	70-75	Total
12:45 - 12:59	0	1	7	34	93	73	18	6	0	0	0	0	0	0	0	**232**
13:00 - 13:14	0	4	6	45	123	64	15	7	1	0	0	0	0	0	0	**265**
13:15 - 13:29	0	7	11	32	125	78	17	7	1	0	0	0	0	0	0	**278**
13:30 - 13:44	0	1	4	44	104	72	37	9	6	1	0	0	0	0	0	**278**
13:45 - 13:59	0	0	3	41	134	91	28	7	2	0	0	0	0	0	0	**306**
14:00 - 14:14	1	1	4	31	103	88	22	12	2	0	0	0	0	0	0	**264**
14:15 - 14:29	0	0	8	26	161	56	22	5	2	1	2	0	0	0	0	**283**
14:30 - 14:44	0	1	2	18	128	68	26	7	0	0	0	0	0	0	0	**250**
14:45 - 14:59	0	1	4	32	121	90	17	13	1	0	1	0	0	0	0	**280**
15:00 - 15:14	0	1	5	15	137	55	16	11	0	1	0	0	0	0	0	**241**
15:15 - 15:29	0	4	18	53	142	59	10	2	0	0	0	0	0	0	0	**288**
15:30 - 15:44	0	0	5	45	102	100	48	17	2	0	0	0	0	0	0	**319**
15:45 - 15:59	0	4	2	42	120	78	40	21	6	1	0	0	0	0	0	**314**
16:00 - 16:14	0	1	3	25	120	122	53	12	1	0	0	0	0	0	0	**337**
16:15 - 16:29	0	0	3	16	84	99	52	24	9	0	0	0	0	0	0	**287**
16:30 - 16:44	0	2	3	18	81	109	63	15	4	1	0	0	0	0	0	**296**
16:45 - 16:59	0	0	3	23	111	107	69	17	7	1	0	0	0	0	0	**338**
17:00 - 17:14	0	1	1	9	94	108	59	35	7	2	0	0	0	0	0	**316**
17:15 - 17:29	0	1	0	16	93	88	67	28	6	0	0	0	0	0	0	**299**
17:30 - 17:44	1	1	2	30	107	90	63	16	6	0	0	0	0	0	0	**316**
17:45 - 17:59	0	1	3	27	91	80	55	14	17	0	1	0	0	0	0	**289**
18:00 - 18:14	0	2	2	11	76	82	61	40	12	1	0	0	0	1	0	**288**
18:15 - 18:29	0	0	2	9	97	98	55	28	4	3	1	0	0	0	0	**297**
18:30 - 18:44	0	0	1	8	67	107	54	13	12	1	1	0	0	0	0	**264**
18:45 - 18:59	0	0	0	7	69	61	81	46	12	4	0	0	0	0	0	**280**
19:00 - 19:14	0	0	0	23	72	79	73	31	5	1	0	0	0	0	0	**284**
19:15 - 19:29	0	0	5	15	105	87	43	21	11	1	0	0	0	0	0	**288**
19:30 - 19:44	0	1	2	30	85	75	64	32	7	0	1	1	0	0	0	**298**
19:45 - 19:59	0	1	0	15	75	95	68	22	3	0	0	0	0	0	0	**279**
20:00 - 20:14	0	0	2	29	98	86	37	20	1	0	0	0	0	0	0	**273**
20:15 - 20:29	3	2	12	46	113	53	23	5	0	1	0	0	0	0	0	**258**
20:30 - 20:44	0	0	0	20	112	79	30	8	1	3	0	0	0	0	0	**253**
20:45 - 20:59	1	0	0	18	74	56	30	18	5	0	0	0	0	0	0	**202**
21:00 - 21:14	0	0	1	26	79	57	40	9	8	2	0	0	0	0	0	**222**
21:15 - 21:29	0	1	0	20	73	60	30	16	4	2	0	0	0	0	0	**206**
21:30 - 21:44	0	0	0	16	96	72	23	8	3	1	0	0	0	0	0	**219**
21:45 - 21:59	0	0	0	13	57	71	26	15	10	1	0	0	0	0	0	**193**
22:00 - 22:14	0	1	0	5	60	58	46	13	4	1	0	0	0	0	0	**188**
22:15 - 22:29	0	0	1	16	52	43	40	33	3	0	1	0	0	0	0	**189**
22:30 - 22:44	0	0	0	8	50	52	43	27	11	4	0	0	0	0	0	**195**
22:45 - 22:59	0	0	0	8	29	55	32	32	10	1	1	1	0	0	0	**169**
23:00 - 23:14	0	0	0	8	38	44	23	14	9	0	0	0	0	0	0	**136**
23:15 - 23:29	0	1	0	3	17	25	31	25	7	2	1	0	0	0	0	**112**
23:30 - 23:44	0	0	0	7	31	23	14	11	6	1	0	0	0	0	0	**93**
23:45 - 23:59	0	0	0	2	22	29	8	21	5	3	2	1	0	0	0	**93**
Totals	**16**	**110**	**387**	**2114**	**7150**	**5755**	**2873**	**1390**	**481**	**113**	**17**	**5**	**0**	**1**	**0**	**20412**
Percent of Total	**0.1**	**0.5**	**1.9**	**10.4**	**35.0**	**28.2**	**14.1**	**6.8**	**2.4**	**0.6**	**0.1**	**0.0**	**0.0**	**0.0**	**0.0**	**100**
Percent of AM	**0.1**	**0.8**	**2.9**	**12.3**	**33.7**	**26.5**	**12.6**	**7.1**	**3.0**	**0.9**	**0.1**	**0.0**	**0.0**	**0.0**	**0.0**	**100**
Percent of PM	**0.1**	**0.3**	**1.2**	**9.0**	**35.9**	**29.3**	**15.1**	**6.6**	**1.9**	**0.3**	**0.1**	**0.0**	**0.0**	**0.0**	**0.0**	**100**

Daily Eastbound Speeds (MPH)

Study Date: Tuesday, 09/18/2018
Unit ID: 0176
Location: TAMIAMI TRAIL / W OF SW 69TH ST

Standard Deviation:	6.8 MPH	Ten Mile Pace:	20 to 29 MPH	85th Percentile:	33.8 MPH
Mean Speed:	26.7 MPH	Percent in Ten Mile Pace:	63.2%	15th Percentile:	20.4 MPH
Median Speed:	25.4 MPH			90th Percentile:	35.9 MPH
Modal Speed:	23.0 MPH			95th Percentile:	39.3 MPH

Daily Eastbound Speeds (MPH)

Study Date: Wednesday, 09/19/2018
Unit ID: 0176
Location: TAMIAMI TRAIL / W OF SW 69TH ST

	0-5	5-10	10-15	15-20	20-25	25-30	30-35	35-40	40-45	45-50	50-55	55-60	60-65	65-70	70-75	Total
00:00 - 00:14	0	0	0	2	7	16	24	11	5	6	0	0	0	0	0	**71**
00:15 - 00:29	0	0	0	1	8	14	14	6	3	0	0	0	0	0	0	**46**
00:30 - 00:44	0	0	0	2	9	12	11	10	5	2	1	0	0	0	0	**52**
00:45 - 00:59	0	0	0	0	11	14	3	6	6	0	1	0	0	0	0	**41**
01:00 - 01:14	0	0	0	3	5	8	9	10	8	4	1	0	0	0	0	**48**
01:15 - 01:29	0	0	0	3	9	7	10	4	2	1	0	0	0	0	0	**36**
01:30 - 01:44	0	0	0	0	4	4	11	3	3	4	1	1	0	0	0	**31**
01:45 - 01:59	0	0	0	2	4	5	3	3	3	2	0	0	0	0	0	**22**
02:00 - 02:14	0	0	1	1	6	9	4	5	5	1	2	0	0	0	0	**34**
02:15 - 02:29	0	0	0	0	2	3	4	9	9	3	1	1	0	0	0	**32**
02:30 - 02:44	0	0	0	3	3	6	5	9	1	3	1	0	0	0	0	**31**
02:45 - 02:59	0	0	0	1	5	5	5	5	2	2	0	0	0	0	0	**25**
03:00 - 03:14	0	0	0	0	3	1	4	5	4	0	0	0	0	0	0	**17**
03:15 - 03:29	0	0	0	0	0	6	5	5	2	0	1	0	0	0	0	**19**
03:30 - 03:44	0	0	0	1	2	2	3	4	4	2	0	0	0	0	0	**18**
03:45 - 03:59	0	0	0	2	4	6	3	6	3	2	0	0	0	0	0	**26**
04:00 - 04:14	0	0	0	0	3	2	8	9	8	3	0	0	0	0	0	**33**
04:15 - 04:29	0	0	0	2	9	7	9	8	4	5	0	0	0	0	0	**44**
04:30 - 04:44	0	0	0	2	4	1	10	11	9	4	0	0	0	0	0	**41**
04:45 - 04:59	0	0	1	0	4	9	17	14	10	4	2	0	1	0	0	**62**
05:00 - 05:14	0	0	0	2	6	8	14	18	16	3	0	0	0	0	0	**67**
05:15 - 05:29	0	0	0	2	9	16	20	28	11	10	2	0	0	0	0	**98**
05:30 - 05:44	0	0	0	2	9	18	31	44	20	10	0	0	0	0	0	**134**
05:45 - 05:59	0	0	0	1	7	21	42	53	22	10	4	1	0	0	0	**161**
06:00 - 06:14	0	0	0	5	26	41	50	49	21	7	2	0	0	0	0	**201**
06:15 - 06:29	0	1	2	3	29	69	83	72	28	5	0	0	0	0	0	**292**
06:30 - 06:44	0	0	4	29	116	63	37	32	7	0	0	0	0	0	0	**288**
06:45 - 06:59	0	1	2	26	113	114	58	21	1	0	0	0	0	0	0	**336**
07:00 - 07:14	0	0	14	53	85	93	50	24	6	4	0	0	0	0	0	**329**
07:15 - 07:29	0	3	12	63	117	79	27	1	0	0	0	0	0	0	0	**302**
07:30 - 07:44	0	7	13	44	99	91	18	1	0	0	0	0	0	0	0	**273**
07:45 - 07:59	0	8	21	70	119	83	24	4	0	0	0	0	0	0	1	**330**
08:00 - 08:14	0	5	19	52	114	84	12	3	1	0	0	0	0	0	1	**291**
08:15 - 08:29	0	7	7	30	85	71	42	13	2	1	0	0	0	0	0	**258**
08:30 - 08:44	1	6	12	47	148	63	14	0	0	0	0	0	0	0	0	**291**
08:45 - 08:59	0	2	3	18	79	121	51	20	3	0	0	0	0	0	0	**297**
09:00 - 09:14	0	10	16	57	140	98	22	2	0	0	0	0	0	0	0	**345**
09:15 - 09:29	1	1	15	59	141	44	6	0	0	0	0	0	0	0	0	**267**
09:30 - 09:44	2	2	9	37	105	94	48	16	4	0	0	0	0	0	0	**317**
09:45 - 09:59	0	0	4	24	120	107	24	7	1	0	0	0	0	0	0	**287**
10:00 - 10:14	2	2	10	60	121	90	17	2	1	0	0	0	0	0	0	**305**
10:15 - 10:29	0	0	0	21	140	114	34	11	2	0	0	0	0	0	0	**322**
10:30 - 10:44	2	1	5	12	152	109	20	6	1	0	0	0	0	0	0	**308**
10:45 - 10:59	0	4	14	44	142	53	11	2	0	0	0	0	0	0	0	**270**
11:00 - 11:14	0	3	9	40	128	56	14	6	4	0	0	0	0	0	0	**260**
11:15 - 11:29	0	3	9	50	144	85	14	3	0	0	0	0	0	0	0	**308**
11:30 - 11:44	0	1	5	49	148	82	19	4	1	0	0	0	0	0	0	**309**
11:45 - 11:59	0	1	5	53	122	63	22	6	1	3	0	0	0	0	0	**276**
12:00 - 12:14	0	0	7	49	106	71	37	17	2	1	0	0	0	0	0	**290**
12:15 - 12:29	0	2	8	59	109	58	19	7	1	0	0	0	0	0	0	**263**
12:30 - 12:44	0	1	3	33	134	107	17	4	0	0	0	0	0	0	0	**299**

Daily Eastbound Speeds (MPH)

Study Date: Wednesday, 09/19/2018
Unit ID: 0176
Location: TAMIAMI TRAIL / W OF SW 69TH ST

	0-5	5-10	10-15	15-20	20-25	25-30	30-35	35-40	40-45	45-50	50-55	55-60	60-65	65-70	70-75	Total
12:45 - 12:59	0	1	7	36	150	56	17	0	0	1	0	0	0	0	0	**268**
13:00 - 13:14	2	1	8	58	153	74	15	0	1	0	0	0	0	0	0	**312**
13:15 - 13:29	0	7	9	33	153	74	19	3	3	0	1	0	0	0	0	**302**
13:30 - 13:44	0	1	9	45	168	48	18	6	0	1	0	0	0	0	0	**296**
13:45 - 13:59	0	0	7	39	123	58	21	7	2	0	0	0	0	0	0	**257**
14:00 - 14:14	0	0	1	31	119	93	10	4	2	0	0	0	0	0	0	**260**
14:15 - 14:29	0	5	20	57	136	60	5	1	1	0	0	0	0	0	0	**285**
14:30 - 14:44	0	0	5	39	121	73	14	2	1	0	0	0	0	0	0	**255**
14:45 - 14:59	4	6	4	18	119	98	38	5	1	0	0	0	0	0	0	**293**
15:00 - 15:14	0	0	6	36	136	74	18	3	1	1	0	0	0	0	0	**275**
15:15 - 15:29	0	2	2	46	132	74	12	2	1	0	0	0	0	0	0	**271**
15:30 - 15:44	0	2	4	22	87	65	51	15	10	0	0	0	0	0	0	**256**
15:45 - 15:59	0	0	5	35	126	86	39	12	5	0	0	0	0	0	0	**308**
16:00 - 16:14	0	0	0	22	118	109	51	17	10	0	0	0	0	0	0	**327**
16:15 - 16:29	0	0	1	16	118	115	56	21	3	0	0	0	0	0	0	**330**
16:30 - 16:44	0	0	6	20	102	87	56	38	9	1	0	0	0	0	0	**319**
16:45 - 16:59	0	0	3	11	84	115	69	32	10	3	0	0	0	0	0	**327**
17:00 - 17:14	0	1	2	24	114	82	44	14	6	2	1	0	0	0	0	**290**
17:15 - 17:29	0	1	0	27	108	120	60	25	3	1	0	0	0	0	0	**345**
17:30 - 17:44	0	2	2	18	107	96	73	20	4	3	0	0	0	0	0	**325**
17:45 - 17:59	0	2	4	46	132	88	32	5	2	0	0	0	0	0	0	**311**
18:00 - 18:14	0	0	5	28	88	88	92	18	5	1	0	0	0	0	0	**325**
18:15 - 18:29	0	0	2	24	115	97	44	16	7	1	2	0	0	0	0	**308**
18:30 - 18:44	0	1	0	15	97	98	80	28	4	0	0	0	0	0	0	**323**
18:45 - 18:59	0	0	0	17	101	130	71	19	6	0	0	0	0	0	0	**344**
19:00 - 19:14	0	0	2	23	119	123	49	18	4	1	0	0	0	0	0	**339**
19:15 - 19:29	0	0	1	30	91	94	62	13	5	2	0	0	0	0	0	**298**
19:30 - 19:44	0	0	3	24	79	94	39	23	7	0	0	0	0	0	0	**269**
19:45 - 19:59	0	0	1	21	68	85	44	27	9	1	0	0	0	0	0	**256**
20:00 - 20:14	0	0	1	16	83	77	39	18	1	0	0	0	0	0	0	**235**
20:15 - 20:29	0	0	0	18	80	85	43	15	3	1	0	0	0	0	0	**245**
20:30 - 20:44	0	0	1	14	96	88	34	19	5	2	0	0	0	0	0	**259**
20:45 - 20:59	0	1	0	12	55	69	63	16	4	1	0	0	0	0	0	**221**
21:00 - 21:14	0	0	2	14	73	77	52	16	3	1	0	0	0	0	0	**238**
21:15 - 21:29	0	1	6	10	44	57	46	18	6	2	0	0	0	0	0	**190**
21:30 - 21:44	0	0	0	17	63	70	27	14	3	0	0	0	0	0	0	**194**
21:45 - 21:59	0	0	0	17	34	44	50	27	12	0	2	0	0	0	0	**186**
22:00 - 22:14	0	0	1	12	58	49	45	17	4	4	0	0	0	0	0	**190**
22:15 - 22:29	0	1	0	11	80	53	28	17	3	1	0	1	0	0	0	**195**
22:30 - 22:44	0	0	1	3	56	37	18	17	7	5	2	0	0	0	0	**146**
22:45 - 22:59	0	0	0	6	30	48	33	19	6	2	0	0	0	0	0	**144**
23:00 - 23:14	0	0	0	9	26	37	35	14	6	4	0	0	0	0	0	**131**
23:15 - 23:29	0	1	1	3	37	37	25	19	9	1	0	0	0	0	0	**133**
23:30 - 23:44	0	0	0	3	31	40	21	16	10	5	0	0	0	0	0	**126**
23:45 - 23:59	0	0	0	7	18	26	19	10	4	3	0	0	0	0	0	**87**
Totals	**14**	**107**	**362**	**2152**	**7443**	**5851**	**2836**	**1285**	**460**	**153**	**27**	**4**	**1**	**0**	**2**	**20697**
Percent of Total	**0.1**	**0.5**	**1.7**	**10.4**	**36.0**	**28.3**	**13.7**	**6.2**	**2.2**	**0.7**	**0.1**	**0.0**	**0.0**	**0.0**	**0.0**	**100**
Percent of AM	**0.1**	**0.8**	**2.6**	**11.9**	**34.7**	**26.3**	**12.0**	**7.2**	**3.0**	**1.2**	**0.2**	**0.0**	**0.0**	**0.0**	**0.0**	**100**
Percent of PM	**0.0**	**0.3**	**1.2**	**9.4**	**36.8**	**29.6**	**14.9**	**5.6**	**1.7**	**0.4**	**0.1**	**0.0**	**0.0**	**0.0**	**0.0**	**100**

Daily Eastbound Speeds (MPH)

Study Date: Wednesday, 09/19/2018
Unit ID: 0176
Location: TAMIAMI TRAIL / W OF SW 69TH ST

Standard Deviation:	6.8 MPH	Ten Mile Pace:	20 to 29 MPH	85th Percentile:	33.5 MPH
Mean Speed:	26.6 MPH	Percent in Ten Mile Pace:	64.2%		
Median Speed:	25.3 MPH			15th Percentile:	20.4 MPH
Modal Speed:	23.0 MPH			90th Percentile:	35.7 MPH
				95th Percentile:	39.2 MPH

Daily Eastbound Speeds (MPH)

Study Date: Thursday, 09/20/2018
Unit ID: 0176
Location: TAMIAMI TRAIL / W OF SW 69TH ST

	0-5	5-10	10-15	15-20	20-25	25-30	30-35	35-40	40-45	45-50	50-55	55-60	60-65	65-70	70-75	Total
00:00 - 00:14	0	0	0	3	13	9	18	11	3	3	0	1	0	0	0	**61**
00:15 - 00:29	0	0	0	1	12	14	11	13	4	2	1	0	0	0	0	**58**
00:30 - 00:44	0	0	0	2	14	11	10	7	15	2	0	0	0	0	0	**61**
00:45 - 00:59	0	0	0	1	4	12	8	14	3	2	0	0	0	0	0	**44**
01:00 - 01:14	0	0	0	2	11	10	11	9	4	3	0	0	0	0	0	**50**
01:15 - 01:29	0	0	0	2	7	6	12	13	4	3	0	0	0	0	0	**47**
01:30 - 01:44	0	0	0	0	6	4	11	7	5	0	1	0	0	0	0	**34**
01:45 - 01:59	0	0	0	1	2	3	8	4	10	2	1	1	0	0	0	**32**
02:00 - 02:14	0	0	0	1	4	10	7	5	3	1	0	0	0	0	0	**31**
02:15 - 02:29	0	0	0	0	1	2	5	7	3	1	0	0	0	0	0	**19**
02:30 - 02:44	0	0	0	2	5	2	7	5	3	1	0	0	0	0	0	**25**
02:45 - 02:59	0	0	0	1	2	4	2	7	7	0	0	0	0	0	0	**23**
03:00 - 03:14	0	0	0	1	4	2	5	9	3	0	0	0	0	0	0	**24**
03:15 - 03:29	0	0	0	2	5	3	5	5	2	3	0	0	0	0	0	**25**
03:30 - 03:44	0	0	0	2	6	7	6	7	2	2	0	1	0	0	0	**33**
03:45 - 03:59	0	0	0	0	2	4	2	15	3	2	1	0	0	0	0	**29**
04:00 - 04:14	0	0	0	1	1	4	5	9	4	3	0	0	0	0	0	**27**
04:15 - 04:29	0	0	0	2	1	8	10	9	9	6	1	0	0	0	0	**46**
04:30 - 04:44	0	0	0	1	2	3	8	9	13	2	1	0	0	0	0	**39**
04:45 - 04:59	0	0	1	0	4	9	11	7	8	6	2	3	0	0	0	**51**
05:00 - 05:14	0	0	0	0	2	12	12	15	17	3	2	1	0	0	0	**64**
05:15 - 05:29	0	1	0	3	5	11	23	28	18	6	1	0	0	0	0	**96**
05:30 - 05:44	0	0	0	0	9	33	30	32	23	10	4	0	0	0	0	**141**
05:45 - 05:59	0	0	0	1	14	33	69	43	28	6	1	2	0	0	0	**197**
06:00 - 06:14	0	0	2	0	33	77	75	31	9	0	3	0	0	0	0	**230**
06:15 - 06:29	0	1	3	24	69	66	46	36	10	0	1	1	0	0	0	**257**
06:30 - 06:44	0	0	1	15	71	100	54	23	14	1	0	0	0	0	0	**279**
06:45 - 06:59	0	1	0	12	52	142	106	33	5	0	0	0	0	0	0	**351**
07:00 - 07:14	0	2	8	30	142	115	27	4	1	1	0	0	1	0	0	**331**
07:15 - 07:29	0	5	14	53	145	84	8	1	0	0	0	0	0	0	0	**310**
07:30 - 07:44	0	3	9	42	130	63	13	0	0	0	0	0	0	0	0	**260**
07:45 - 07:59	1	8	30	42	103	58	6	2	0	1	1	0	0	0	0	**252**
08:00 - 08:14	0	1	2	22	101	129	57	29	4	0	0	0	0	0	0	**345**
08:15 - 08:29	0	1	1	15	75	83	76	42	6	1	1	0	0	0	0	**301**
08:30 - 08:44	1	1	2	16	73	114	77	27	7	1	1	0	0	0	0	**320**
08:45 - 08:59	3	7	13	21	125	89	30	2	0	0	0	0	0	0	0	**290**
09:00 - 09:14	1	7	18	65	117	59	11	4	1	0	0	0	0	0	0	**283**
09:15 - 09:29	1	4	12	83	116	55	10	0	0	0	0	0	0	0	0	**281**
09:30 - 09:44	1	12	28	58	129	39	10	1	0	0	1	0	0	0	0	**279**
09:45 - 09:59	1	12	17	45	107	39	11	4	1	0	0	0	0	0	0	**237**
10:00 - 10:14	0	0	18	63	107	76	33	9	2	0	0	0	0	0	0	**308**
10:15 - 10:29	0	1	8	25	111	96	25	15	1	1	0	0	0	0	0	**283**
10:30 - 10:44	0	0	8	34	100	67	39	14	5	2	0	0	0	0	0	**269**
10:45 - 10:59	0	7	34	51	85	68	21	3	4	0	0	0	0	0	0	**273**
11:00 - 11:14	0	0	3	48	149	55	15	2	0	1	0	0	0	0	0	**273**
11:15 - 11:29	0	1	9	52	118	81	22	2	1	1	0	0	0	0	0	**287**
11:30 - 11:44	1	10	21	69	97	27	3	2	0	0	0	0	0	0	0	**230**
11:45 - 11:59	0	0	19	61	103	66	32	11	3	0	0	0	0	0	0	**295**
12:00 - 12:14	0	0	4	32	94	77	29	11	7	0	0	0	0	0	0	**254**
12:15 - 12:29	0	0	4	34	155	67	12	2	0	0	0	0	0	0	0	**274**
12:30 - 12:44	0	0	9	49	133	86	15	3	1	0	0	0	0	0	0	**296**

Daily Eastbound Speeds (MPH)

Study Date: Thursday, 09/20/2018
Unit ID: 0176
Location: TAMIAMI TRAIL / W OF SW 69TH ST

	0-5	5-10	10-15	15-20	20-25	25-30	30-35	35-40	40-45	45-50	50-55	55-60	60-65	65-70	70-75	Total
12:45 - 12:59	0	3	12	39	114	74	13	2	0	0	0	0	0	0	0	**257**
13:00 - 13:14	0	1	4	20	138	65	29	3	0	0	0	0	0	0	1	**261**
13:15 - 13:29	0	0	0	31	151	78	22	7	7	1	0	0	0	0	0	**297**
13:30 - 13:44	0	3	7	54	136	71	32	4	2	0	0	0	0	0	0	**309**
13:45 - 13:59	4	1	14	61	90	58	27	9	0	0	0	0	0	0	0	**264**
14:00 - 14:14	0	1	1	28	136	73	29	3	2	0	0	0	0	0	0	**273**
14:15 - 14:29	0	2	3	48	134	65	13	6	1	0	0	0	0	0	0	**272**
14:30 - 14:44	0	5	12	63	174	55	8	0	0	0	0	0	0	0	0	**317**
14:45 - 14:59	0	4	6	32	135	49	9	4	2	0	0	0	0	0	0	**241**
15:00 - 15:14	0	1	6	31	107	52	20	11	1	0	0	0	0	0	0	**229**
15:15 - 15:29	0	3	9	47	146	60	8	0	2	3	0	0	0	0	0	**278**
15:30 - 15:44	0	1	4	31	101	109	41	12	3	0	0	0	0	0	0	**302**
15:45 - 15:59	0	0	1	39	102	77	57	16	9	3	0	0	0	0	0	**304**
16:00 - 16:14	0	4	6	30	81	89	71	26	2	1	0	0	0	0	0	**310**
16:15 - 16:29	0	1	3	25	94	114	44	31	5	1	0	0	0	0	0	**318**
16:30 - 16:44	0	0	0	17	96	85	47	33	11	1	0	0	0	0	0	**290**
16:45 - 16:59	0	1	3	13	82	101	54	37	7	2	0	0	0	0	0	**300**
17:00 - 17:14	0	0	1	8	96	95	75	19	6	0	0	0	0	0	0	**300**
17:15 - 17:29	0	3	8	33	89	95	42	31	14	5	1	0	0	0	0	**321**
17:30 - 17:44	0	0	4	39	81	97	42	22	16	0	0	1	0	0	0	**302**
17:45 - 17:59	0	0	1	11	65	83	62	44	11	2	1	0	0	0	0	**280**
18:00 - 18:14	0	2	0	14	77	106	85	28	4	2	2	0	0	0	0	**320**
18:15 - 18:29	0	2	2	18	53	61	90	36	8	1	2	0	0	0	0	**273**
18:30 - 18:44	1	0	3	16	71	80	55	25	13	1	0	2	1	1	0	**269**
18:45 - 18:59	0	0	1	8	88	94	76	35	13	5	1	0	0	0	0	**321**
19:00 - 19:14	0	0	2	14	88	92	62	31	5	1	0	0	0	0	0	**295**
19:15 - 19:29	0	0	1	23	68	101	68	22	5	1	1	0	0	0	0	**290**
19:30 - 19:44	0	0	0	10	81	108	53	29	5	0	0	0	0	0	0	**286**
19:45 - 19:59	0	0	0	13	57	74	67	22	7	2	3	0	0	0	0	**245**
20:00 - 20:14	0	0	0	7	66	96	65	27	3	1	0	0	0	0	0	**265**
20:15 - 20:29	0	1	0	12	85	112	64	17	4	0	0	0	0	0	0	**295**
20:30 - 20:44	0	1	2	12	86	63	51	19	3	0	0	0	0	0	0	**237**
20:45 - 20:59	0	0	2	22	80	53	46	23	3	0	0	0	0	0	0	**229**
21:00 - 21:14	0	0	0	6	63	77	54	27	4	0	0	0	0	0	0	**231**
21:15 - 21:29	0	0	3	11	48	67	66	17	5	1	0	0	0	0	0	**218**
21:30 - 21:44	0	0	1	9	71	81	21	11	3	0	0	0	0	0	0	**197**
21:45 - 21:59	0	0	0	5	61	50	28	10	2	0	0	0	0	0	0	**156**
22:00 - 22:14	0	0	3	13	43	56	41	18	10	1	0	1	0	0	0	**186**
22:15 - 22:29	0	0	2	10	36	56	43	23	7	1	1	0	0	0	0	**179**
22:30 - 22:44	0	0	1	7	66	68	29	21	5	4	0	0	0	0	0	**201**
22:45 - 22:59	0	0	0	4	32	38	34	22	10	3	0	0	0	0	0	**143**
23:00 - 23:14	0	1	0	7	45	41	29	13	1	1	0	1	0	0	0	**139**
23:15 - 23:29	0	0	1	6	33	39	33	20	3	6	2	1	1	0	0	**145**
23:30 - 23:44	0	0	1	3	34	30	21	12	9	4	1	0	0	0	0	**115**
23:45 - 23:59	0	0	0	2	14	19	26	21	8	2	0	1	0	0	1	**94**
Totals	**15**	**126**	**428**	**2042**	**6770**	**5601**	**3111**	**1452**	**517**	**135**	**39**	**17**	**3**	**1**	**2**	**20259**
Percent of Total	**0.1**	**0.6**	**2.1**	**10.1**	**33.4**	**27.6**	**15.4**	**7.2**	**2.6**	**0.7**	**0.2**	**0.1**	**0.0**	**0.0**	**0.0**	**100**
Percent of AM	**0.1**	**1.1**	**3.5**	**12.1**	**32.1**	**25.5**	**13.6**	**7.3**	**3.3**	**1.0**	**0.3**	**0.1**	**0.0**	**0.0**	**0.0**	**100**
Percent of PM	**0.0**	**0.3**	**1.2**	**8.8**	**34.3**	**29.0**	**16.5**	**7.1**	**2.0**	**0.5**	**0.1**	**0.1**	**0.0**	**0.0**	**0.0**	**100**

Daily Eastbound Speeds (MPH)

Study Date: Thursday, 09/20/2018
Unit ID: 0176
Location: TAMIAMI TRAIL / W OF SW 69TH ST

Standard Deviation:	7.1 MPH	Ten Mile Pace:	20 to 29 MPH	85th Percentile:	34.3 MPH
Mean Speed:	26.9 MPH	Percent in Ten Mile Pace:	61.1%	15th Percentile:	20.4 MPH
Median Speed:	25.8 MPH			90th Percentile:	35.6 MPH
Modal Speed:	23.0 MPH			95th Percentile:	39.8 MPH

Daily Westbound Speeds (MPH)

Study Date: Tuesday, 09/18/2018
Unit ID: 0222
Location: TAMIAMI TRAIL / W OF SW 69TH ST

	0-5	5-10	10-15	15-20	20-25	25-30	30-35	35-40	40-45	45-50	50-55	55-60	60-65	65-70	70-75	Total
00:00 - 00:14	0	0	1	14	14	12	22	12	4	1	2	0	0	0	0	**82**
00:15 - 00:29	0	0	1	2	18	13	20	13	9	2	0	0	1	0	0	**79**
00:30 - 00:44	0	0	3	6	9	17	25	8	4	2	1	0	0	0	0	**75**
00:45 - 00:59	0	0	1	10	15	13	13	7	1	0	0	0	0	0	0	**60**
01:00 - 01:14	0	0	0	2	3	14	9	10	2	1	1	0	1	0	0	**43**
01:15 - 01:29	0	0	0	0	4	10	6	6	1	0	0	0	0	0	0	**27**
01:30 - 01:44	0	1	0	0	6	9	13	7	1	1	0	0	0	0	0	**38**
01:45 - 01:59	0	0	0	2	10	4	5	3	0	2	0	0	0	0	0	**26**
02:00 - 02:14	0	0	0	3	8	5	10	4	6	1	0	0	0	0	0	**37**
02:15 - 02:29	0	0	0	0	4	4	9	8	2	2	0	0	0	0	2	**31**
02:30 - 02:44	0	0	1	0	4	7	8	8	4	0	0	0	0	0	0	**32**
02:45 - 02:59	0	0	0	1	5	6	6	9	4	1	0	0	0	0	0	**32**
03:00 - 03:14	0	0	0	0	1	2	14	1	5	0	1	0	0	0	0	**24**
03:15 - 03:29	0	0	1	2	4	3	5	7	1	1	0	0	0	0	0	**24**
03:30 - 03:44	0	0	0	1	6	3	5	3	2	3	0	0	0	0	0	**23**
03:45 - 03:59	0	0	1	1	4	11	9	6	2	0	0	0	0	0	0	**34**
04:00 - 04:14	0	1	0	1	0	4	4	5	4	0	2	0	0	0	0	**21**
04:15 - 04:29	0	0	0	0	4	6	11	8	2	1	0	0	0	0	0	**32**
04:30 - 04:44	0	0	0	5	6	9	8	11	5	3	0	0	0	0	0	**47**
04:45 - 04:59	0	0	1	6	4	7	11	6	8	1	0	0	0	0	0	**44**
05:00 - 05:14	0	0	0	6	9	6	20	9	3	0	0	0	0	0	0	**53**
05:15 - 05:29	0	0	5	5	8	7	15	13	10	1	0	0	0	0	0	**64**
05:30 - 05:44	0	0	1	5	10	27	23	30	13	1	0	0	0	0	0	**110**
05:45 - 05:59	0	2	1	7	16	13	31	23	7	3	1	0	0	0	0	**104**
06:00 - 06:14	0	1	5	6	11	28	52	36	18	6	0	1	0	0	0	**164**
06:15 - 06:29	0	1	7	14	31	41	67	41	16	3	2	0	0	0	0	**223**
06:30 - 06:44	0	1	13	23	34	40	73	33	18	1	0	0	0	0	0	**236**
06:45 - 06:59	0	1	3	14	29	63	61	42	11	4	0	0	0	0	0	**228**
07:00 - 07:14	0	1	7	21	58	65	63	32	5	1	0	0	0	0	0	**253**
07:15 - 07:29	6	5	8	12	51	76	58	23	5	0	0	0	0	0	0	**244**
07:30 - 07:44	0	4	9	13	54	100	46	24	6	1	1	0	0	0	0	**258**
07:45 - 07:59	2	14	18	19	27	24	15	5	0	0	0	0	0	0	0	**124**
08:00 - 08:14	1	9	20	40	61	20	21	1	2	0	0	0	0	0	0	**175**
08:15 - 08:29	0	1	6	22	57	92	40	20	2	0	0	0	0	0	0	**240**
08:30 - 08:44	6	10	15	13	61	75	30	13	4	1	0	0	0	0	0	**228**
08:45 - 08:59	0	1	8	21	56	108	60	12	2	3	0	0	0	0	0	**271**
09:00 - 09:14	3	5	17	40	80	52	37	17	4	0	0	0	0	0	0	**255**
09:15 - 09:29	0	5	16	16	57	90	58	16	3	0	1	0	0	0	0	**262**
09:30 - 09:44	0	2	11	25	100	57	25	6	2	1	0	0	0	0	0	**229**
09:45 - 09:59	0	6	11	41	90	66	32	12	0	0	0	0	0	0	0	**258**
10:00 - 10:14	0	4	13	34	76	72	36	22	6	0	1	0	0	0	0	**264**
10:15 - 10:29	0	7	13	46	60	50	33	15	7	1	0	1	0	0	0	**233**
10:30 - 10:44	0	3	12	29	80	78	48	12	3	0	0	0	0	0	0	**265**
10:45 - 10:59	0	3	7	35	81	88	30	4	0	0	0	0	0	0	0	**248**
11:00 - 11:14	1	5	12	18	95	92	26	9	0	0	0	0	0	0	0	**258**
11:15 - 11:29	0	4	18	35	98	60	23	5	1	0	0	0	0	0	0	**244**
11:30 - 11:44	0	7	30	90	58	25	1	2	0	0	0	0	0	0	0	**213**
11:45 - 11:59	0	6	25	48	60	67	38	4	1	0	0	0	0	0	0	**249**
12:00 - 12:14	0	8	17	37	84	55	32	6	4	0	0	0	0	0	0	**243**
12:15 - 12:29	0	11	39	97	85	30	10	3	0	0	0	0	0	0	0	**275**
12:30 - 12:44	0	2	18	39	75	52	24	2	0	0	0	0	0	0	0	**212**

Printed: 09/22/2018 at 10:17
TrafficViewer Pro v1.6.4.124
PicoCount 2500 V2.35 (s/n# 14060689)

Daily Westbound Speeds (MPH)

Study Date: Tuesday, 09/18/2018
Unit ID: 0222
Location: TAMIAMI TRAIL / W OF SW 69TH ST

	0-5	5-10	10-15	15-20	20-25	25-30	30-35	35-40	40-45	45-50	50-55	55-60	60-65	65-70	70-75	Total
12:45 - 12:59	0	14	15	29	41	63	14	2	0	0	0	0	0	0	0	**178**
13:00 - 13:14	0	10	17	45	92	66	16	5	1	0	1	0	0	0	0	**253**
13:15 - 13:29	0	7	19	61	81	32	6	0	0	1	0	0	0	0	0	**207**
13:30 - 13:44	0	8	10	49	95	61	23	13	0	0	0	0	0	0	0	**259**
13:45 - 13:59	4	8	36	28	20	0	0	1	1	0	0	0	0	1	0	**99**
14:00 - 14:14	0	9	28	91	42	2	0	0	0	0	0	0	0	0	0	**172**
14:15 - 14:29	0	8	30	52	44	9	1	0	0	0	0	0	0	0	0	**144**
14:30 - 14:44	3	13	28	61	41	27	16	3	4	0	0	1	1	0	0	**198**
14:45 - 14:59	0	6	16	30	88	68	16	6	1	1	0	0	0	0	0	**232**
15:00 - 15:14	1	3	13	38	78	52	16	5	2	0	0	0	0	0	0	**208**
15:15 - 15:29	16	17	32	58	84	33	7	1	0	0	0	0	0	0	0	**248**
15:30 - 15:44	1	11	30	55	54	5	0	0	0	0	0	0	0	0	0	**156**
15:45 - 15:59	1	8	43	66	50	11	0	0	0	0	0	0	0	0	0	**179**
16:00 - 16:14	0	9	34	58	82	11	3	0	0	0	0	0	0	1	0	**198**
16:15 - 16:29	4	21	39	48	4	0	0	1	0	0	0	0	0	0	0	**117**
16:30 - 16:44	1	10	47	65	30	0	0	0	0	0	0	0	0	0	0	**153**
16:45 - 16:59	0	15	32	52	26	5	1	0	0	0	0	0	0	0	0	**131**
17:00 - 17:14	1	24	30	13	1	2	0	0	0	0	0	0	0	0	0	**71**
17:15 - 17:29	3	24	14	7	3	1	0	0	1	0	0	0	0	0	0	**53**
17:30 - 17:44	3	16	13	3	0	0	0	0	0	0	0	0	0	0	0	**35**
17:45 - 17:59	2	10	16	21	11	1	1	0	0	0	0	0	0	0	0	**62**
18:00 - 18:14	3	17	28	15	3	0	1	0	0	0	0	0	0	0	0	**67**
18:15 - 18:29	2	21	48	40	7	1	2	0	0	0	0	0	0	0	0	**121**
18:30 - 18:44	0	19	53	31	4	0	0	0	0	0	0	0	0	0	0	**107**
18:45 - 18:59	0	12	39	46	22	3	1	0	0	0	0	0	0	0	0	**123**
19:00 - 19:14	0	2	14	65	139	78	23	7	0	0	0	0	0	0	0	**328**
19:15 - 19:29	0	2	11	78	133	71	24	5	1	0	0	0	0	0	0	**325**
19:30 - 19:44	13	10	30	33	116	79	20	8	3	0	0	0	0	0	0	**312**
19:45 - 19:59	0	3	18	42	71	41	22	2	2	0	0	0	0	0	0	**201**
20:00 - 20:14	1	13	5	32	89	83	35	9	3	1	0	0	0	0	0	**271**
20:15 - 20:29	1	5	9	37	75	68	34	6	1	0	0	0	0	0	0	**236**
20:30 - 20:44	1	11	14	52	43	63	24	11	1	0	0	0	0	0	0	**220**
20:45 - 20:59	2	4	17	29	47	61	54	24	5	0	0	0	0	0	0	**243**
21:00 - 21:14	1	5	12	21	27	53	46	34	13	2	0	0	0	0	0	**214**
21:15 - 21:29	0	3	16	29	35	61	49	19	4	2	1	0	0	0	0	**219**
21:30 - 21:44	0	3	17	14	31	36	32	19	4	1	0	0	0	0	0	**157**
21:45 - 21:59	0	7	9	29	41	34	17	9	2	0	0	0	0	0	0	**148**
22:00 - 22:14	0	13	17	20	39	45	27	6	1	0	0	0	0	0	0	**168**
22:15 - 22:29	7	11	15	22	25	28	24	10	1	1	0	0	0	0	0	**144**
22:30 - 22:44	0	1	0	19	41	52	37	13	5	0	0	0	0	0	0	**168**
22:45 - 22:59	0	1	4	12	32	32	31	15	11	2	0	0	0	0	0	**140**
23:00 - 23:14	0	0	3	10	21	36	32	28	9	1	0	0	0	0	0	**140**
23:15 - 23:29	1	4	9	16	32	22	17	10	2	0	0	0	0	0	0	**113**
23:30 - 23:44	0	2	11	22	23	21	14	7	2	0	0	0	0	0	0	**102**
23:45 - 23:59	0	1	1	3	21	20	31	18	7	1	0	0	0	0	0	**103**
Totals	**91**	**552**	**1337**	**2574**	**3965**	**3315**	**2058**	**931**	**307**	**62**	**15**	**3**	**3**	**2**	**2**	**15217**
Percent of Total	**0.6**	**3.6**	**8.8**	**16.9**	**26.1**	**21.8**	**13.5**	**6.1**	**2.0**	**0.4**	**0.1**	**0.0**	**0.0**	**0.0**	**0.0**	**100**
Percent of AM	**0.3**	**1.6**	**4.7**	**11.1**	**24.2**	**25.7**	**18.8**	**9.2**	**3.2**	**0.7**	**0.2**	**0.0**	**0.0**	**0.0**	**0.0**	**100**
Percent of PM	**0.9**	**5.2**	**12.0**	**21.5**	**27.5**	**18.6**	**9.3**	**3.6**	**1.1**	**0.2**	**0.0**	**0.0**	**0.0**	**0.0**	**0.0**	**100**

Daily Westbound Speeds (MPH)

Study Date: Tuesday, 09/18/2018
Unit ID: 0222
Location: TAMIAMI TRAIL / W OF SW 69TH ST

Standard Deviation:	8.3 MPH	Ten Mile Pace:	20 to 29 MPH	85th Percentile:	33.2 MPH
Mean Speed:	24.5 MPH	Percent in Ten Mile Pace:	47.8%	15th Percentile:	15.7 MPH
Median Speed:	24.6 MPH			90th Percentile:	35.4 MPH
Modal Speed:	23.0 MPH			95th Percentile:	38.6 MPH

Daily Westbound Speeds (MPH)

Study Date: Wednesday, 09/19/2018
Unit ID: 0222
Location: TAMIAMI TRAIL / W OF SW 69TH ST

	0-5	5-10	10-15	15-20	20-25	25-30	30-35	35-40	40-45	45-50	50-55	55-60	60-65	65-70	70-75	Total
00:00 - 00:14	0	1	2	8	17	13	16	13	8	2	0	0	0	0	0	**80**
00:15 - 00:29	0	0	0	6	10	20	14	21	10	3	0	0	0	0	0	**84**
00:30 - 00:44	0	0	0	3	11	10	14	17	6	1	1	0	0	0	0	**63**
00:45 - 00:59	0	0	1	2	7	10	8	7	5	2	0	0	0	0	0	**42**
01:00 - 01:14	0	0	1	0	10	2	15	17	6	2	0	0	0	0	0	**53**
01:15 - 01:29	0	0	1	1	11	4	11	10	5	0	0	1	0	0	0	**44**
01:30 - 01:44	0	1	1	4	4	3	11	9	2	0	1	0	0	0	0	**36**
01:45 - 01:59	0	1	1	5	5	10	12	6	1	0	0	0	0	0	0	**41**
02:00 - 02:14	0	0	1	3	4	7	10	9	7	2	0	0	0	0	0	**43**
02:15 - 02:29	0	0	0	1	3	5	4	7	0	1	1	0	0	0	0	**22**
02:30 - 02:44	0	0	0	0	6	6	11	9	4	0	0	0	0	0	0	**36**
02:45 - 02:59	0	0	0	1	3	7	3	4	6	1	0	0	0	0	0	**25**
03:00 - 03:14	0	0	0	0	3	1	3	8	4	2	1	0	0	0	0	**22**
03:15 - 03:29	0	0	1	1	4	1	6	3	5	2	0	0	0	0	0	**23**
03:30 - 03:44	1	0	0	1	6	4	7	10	5	3	0	0	0	0	0	**37**
03:45 - 03:59	0	0	0	0	5	6	10	5	2	1	0	0	0	0	0	**29**
04:00 - 04:14	0	0	0	0	3	6	6	5	4	1	0	0	0	0	0	**25**
04:15 - 04:29	0	0	0	1	4	4	5	7	7	3	0	0	0	0	0	**31**
04:30 - 04:44	0	0	0	1	7	8	12	8	4	1	0	0	1	0	0	**42**
04:45 - 04:59	0	0	0	0	1	11	11	9	7	1	0	0	0	0	0	**40**
05:00 - 05:14	0	0	1	3	4	9	16	22	6	2	1	0	0	0	0	**64**
05:15 - 05:29	0	0	0	4	12	5	18	24	9	5	0	0	0	0	0	**77**
05:30 - 05:44	0	0	1	6	8	12	24	30	19	7	2	0	0	0	0	**109**
05:45 - 05:59	0	0	0	4	11	16	26	23	21	4	3	0	0	0	0	**108**
06:00 - 06:14	0	0	0	2	6	22	41	48	27	6	0	0	0	0	0	**152**
06:15 - 06:29	0	1	5	13	19	30	51	62	17	3	1	0	0	0	0	**202**
06:30 - 06:44	0	1	2	12	24	35	62	51	17	3	0	0	0	0	0	**207**
06:45 - 06:59	1	0	11	12	20	28	54	51	11	4	1	0	0	0	0	**193**
07:00 - 07:14	0	1	6	12	49	67	57	39	10	3	0	0	0	0	0	**244**
07:15 - 07:29	1	3	7	13	61	98	36	10	2	0	0	0	0	0	0	**231**
07:30 - 07:44	0	1	5	18	62	89	64	18	7	1	1	0	0	0	0	**266**
07:45 - 07:59	0	5	24	26	70	79	34	12	8	1	0	0	0	0	0	**259**
08:00 - 08:14	0	2	5	29	85	48	45	29	3	1	0	0	0	0	0	**247**
08:15 - 08:29	0	4	11	26	58	76	46	19	5	0	1	0	0	0	0	**246**
08:30 - 08:44	0	2	13	25	67	111	46	17	0	1	0	0	0	0	0	**282**
08:45 - 08:59	0	4	9	21	65	109	54	16	8	4	1	0	0	0	0	**291**
09:00 - 09:14	0	0	4	19	69	96	42	10	3	3	0	0	0	0	0	**246**
09:15 - 09:29	0	0	3	19	64	75	54	26	5	0	0	0	0	0	0	**246**
09:30 - 09:44	0	3	14	22	56	69	47	18	6	0	2	0	0	0	0	**237**
09:45 - 09:59	0	7	13	34	74	76	26	8	0	0	0	0	0	0	0	**238**
10:00 - 10:14	0	3	17	44	63	56	26	13	4	1	0	0	0	0	0	**227**
10:15 - 10:29	0	9	20	37	58	84	25	10	2	1	1	0	0	0	0	**247**
10:30 - 10:44	1	9	21	28	80	78	27	5	0	1	0	0	0	0	0	**250**
10:45 - 10:59	1	1	10	24	100	68	34	14	0	0	0	0	0	0	0	**252**
11:00 - 11:14	2	7	20	40	80	19	7	3	0	1	0	1	0	0	0	**180**
11:15 - 11:29	1	9	11	28	69	51	16	3	0	1	0	0	0	0	0	**189**
11:30 - 11:44	0	4	14	50	107	47	34	8	1	0	0	0	0	0	0	**265**
11:45 - 11:59	0	7	19	25	75	86	43	16	2	0	0	0	0	0	0	**273**
12:00 - 12:14	2	11	21	59	86	40	15	5	2	0	0	0	0	0	0	**241**
12:15 - 12:29	3	9	29	84	88	27	10	2	0	0	0	0	0	0	0	**252**
12:30 - 12:44	1	7	16	30	71	51	35	5	1	0	0	0	0	0	0	**217**

Daily Westbound Speeds (MPH)

Study Date: Wednesday, 09/19/2018
Unit ID: 0222
Location: TAMIAMI TRAIL / W OF SW 69TH ST

	0-5	5-10	10-15	15-20	20-25	25-30	30-35	35-40	40-45	45-50	50-55	55-60	60-65	65-70	70-75	Total
12:45 - 12:59	0	6	13	18	41	46	34	10	3	0	0	0	0	0	0	**171**
13:00 - 13:14	2	5	31	63	79	54	13	2	0	0	0	0	1	0	0	**250**
13:15 - 13:29	0	3	19	59	58	34	6	2	0	0	0	0	0	0	0	**181**
13:30 - 13:44	1	8	20	53	57	37	5	1	0	0	0	0	0	0	0	**182**
13:45 - 13:59	1	7	15	18	63	63	35	4	1	0	0	0	0	0	0	**207**
14:00 - 14:14	0	9	14	24	79	68	24	15	4	0	0	0	0	0	0	**237**
14:15 - 14:29	1	8	17	72	56	40	8	3	0	0	0	0	0	0	0	**205**
14:30 - 14:44	1	8	24	82	111	52	11	3	4	1	0	0	0	0	0	**297**
14:45 - 14:59	0	5	11	37	95	70	13	1	1	0	0	0	0	0	0	**233**
15:00 - 15:14	1	10	25	19	51	47	19	1	0	0	0	0	0	0	0	**173**
15:15 - 15:29	2	7	25	59	35	27	5	0	0	0	0	0	0	0	0	**160**
15:30 - 15:44	1	8	23	56	76	26	5	0	0	0	0	0	1	0	0	**196**
15:45 - 15:59	0	8	29	58	75	37	13	3	0	0	0	0	0	0	0	**223**
16:00 - 16:14	2	5	19	74	122	78	17	0	1	0	0	0	0	0	0	**318**
16:15 - 16:29	1	5	42	71	54	14	5	0	0	0	0	0	0	0	0	**192**
16:30 - 16:44	0	9	21	80	78	32	11	3	0	0	0	0	0	0	0	**234**
16:45 - 16:59	3	11	25	29	20	0	0	1	0	0	0	0	0	0	0	**89**
17:00 - 17:14	3	20	26	33	10	1	0	0	0	0	0	0	0	0	0	**93**
17:15 - 17:29	3	30	29	26	6	1	0	0	1	0	0	0	0	0	0	**96**
17:30 - 17:44	3	22	32	14	0	0	0	0	0	0	0	0	0	0	0	**71**
17:45 - 17:59	2	22	18	5	0	0	1	0	0	0	1	0	0	0	0	**49**
18:00 - 18:14	5	25	37	27	14	1	0	0	0	0	0	1	0	0	0	**110**
18:15 - 18:29	4	23	24	8	6	2	0	0	0	0	0	0	0	0	0	**67**
18:30 - 18:44	1	13	18	11	16	1	0	0	0	0	0	0	0	0	0	**60**
18:45 - 18:59	1	7	28	15	1	0	0	0	0	1	0	0	0	0	0	**53**
19:00 - 19:14	7	20	37	65	42	9	3	0	0	1	0	0	0	0	0	**184**
19:15 - 19:29	3	38	15	5	8	3	0	0	0	0	0	0	0	0	0	**72**
19:30 - 19:44	1	15	22	8	2	0	0	0	0	0	0	0	0	0	1	**49**
19:45 - 19:59	3	19	29	18	0	0	0	0	0	0	0	0	0	0	0	**69**
20:00 - 20:14	3	9	17	22	16	32	19	7	4	0	0	0	0	0	0	**129**
20:15 - 20:29	6	5	13	29	46	62	32	10	2	1	0	0	0	0	0	**206**
20:30 - 20:44	1	2	10	34	65	39	31	7	3	0	0	0	0	0	0	**192**
20:45 - 20:59	1	4	16	25	64	68	24	19	2	2	2	0	0	0	0	**227**
21:00 - 21:14	1	4	10	11	52	50	41	28	7	2	0	0	0	0	0	**206**
21:15 - 21:29	1	3	6	28	62	43	48	29	7	0	0	0	0	0	0	**227**
21:30 - 21:44	0	7	17	27	40	45	19	13	3	0	0	0	0	0	0	**171**
21:45 - 21:59	0	2	24	27	63	48	18	9	1	2	0	0	0	0	0	**194**
22:00 - 22:14	0	2	10	29	38	36	25	9	4	3	0	0	0	0	0	**156**
22:15 - 22:29	1	8	20	19	21	31	19	2	2	0	0	0	0	0	0	**123**
22:30 - 22:44	0	7	15	22	26	21	35	13	6	1	0	0	0	0	0	**146**
22:45 - 22:59	1	1	12	12	34	12	25	15	4	0	0	0	0	0	0	**116**
23:00 - 23:14	0	0	1	5	28	20	34	28	11	1	1	0	0	0	0	**129**
23:15 - 23:29	0	0	1	7	15	33	23	24	1	0	0	0	0	0	0	**104**
23:30 - 23:44	0	2	8	19	17	16	12	16	7	1	0	0	0	0	0	**98**
23:45 - 23:59	2	2	4	16	11	11	32	19	5	1	0	0	0	0	0	**103**
Totals	**83**	**547**	**1213**	**2246**	**3738**	**3205**	**1969**	**1098**	**378**	**98**	**22**	**3**	**3**	**0**	**1**	**14604**
Percent of Total	**0.6**	**3.7**	**8.3**	**15.4**	**25.6**	**21.9**	**13.5**	**7.5**	**2.6**	**0.7**	**0.2**	**0.0**	**0.0**	**0.0**	**0.0**	**100**
Percent of AM	**0.1**	**1.3**	**4.0**	**9.3**	**24.0**	**26.0**	**18.2**	**11.5**	**4.3**	**1.2**	**0.3**	**0.0**	**0.0**	**0.0**	**0.0**	**100**
Percent of PM	**1.0**	**5.9**	**12.1**	**20.8**	**27.0**	**18.4**	**9.3**	**4.0**	**1.1**	**0.2**	**0.1**	**0.0**	**0.0**	**0.0**	**0.0**	**100**

Daily Westbound Speeds (MPH)

Study Date: Wednesday, 09/19/2018
Unit ID: 0222
Location: TAMIAMI TRAIL / W OF SW 69TH ST

Standard Deviation:	8.6 MPH	Ten Mile Pace:	20 to 29 MPH	85th Percentile:	34.2 MPH
Mean Speed:	25.0 MPH	Percent in Ten Mile Pace:	47.5%		
Median Speed:	25.2 MPH			15th Percentile:	15.9 MPH
Modal Speed:	23.0 MPH			90th Percentile:	35.8 MPH
				95th Percentile:	39.8 MPH

Daily Westbound Speeds (MPH)

Study Date: Thursday, 09/20/2018
Unit ID: 0222
Location: TAMIAMI TRAIL / W OF SW 69TH ST

	0-5	5-10	10-15	15-20	20-25	25-30	30-35	35-40	40-45	45-50	50-55	55-60	60-65	65-70	70-75	Total
00:00 - 00:14	0	0	2	3	7	19	30	13	7	3	0	0	0	0	0	**84**
00:15 - 00:29	0	0	2	5	12	14	12	21	6	0	1	0	0	0	0	**73**
00:30 - 00:44	0	0	0	4	8	11	13	9	5	1	2	0	0	0	0	**53**
00:45 - 00:59	0	0	0	2	8	12	12	9	6	4	2	0	0	0	0	**55**
01:00 - 01:14	0	1	0	5	9	9	9	7	7	1	0	0	0	0	0	**48**
01:15 - 01:29	0	0	2	2	2	9	15	4	1	2	1	0	0	0	0	**38**
01:30 - 01:44	0	0	0	2	5	10	6	8	2	1	0	0	0	0	0	**34**
01:45 - 01:59	0	0	0	1	1	11	9	12	2	0	0	0	0	0	0	**36**
02:00 - 02:14	0	0	0	4	2	7	7	8	4	2	1	0	0	0	0	**35**
02:15 - 02:29	0	0	0	1	2	4	6	12	4	2	0	0	0	0	0	**31**
02:30 - 02:44	0	0	0	1	3	4	7	10	5	0	0	0	0	0	0	**30**
02:45 - 02:59	0	0	0	2	2	5	9	4	3	2	0	0	0	0	0	**27**
03:00 - 03:14	0	0	0	0	5	3	8	5	5	0	0	0	0	0	0	**26**
03:15 - 03:29	0	0	1	2	4	5	4	7	1	1	0	0	0	0	0	**25**
03:30 - 03:44	0	0	0	2	13	3	13	3	1	0	0	0	0	0	0	**35**
03:45 - 03:59	0	1	0	2	4	6	8	5	2	1	0	1	0	0	0	**30**
04:00 - 04:14	0	0	0	0	5	2	9	11	3	0	0	0	0	0	0	**30**
04:15 - 04:29	0	0	0	1	3	3	4	6	3	1	0	0	0	0	0	**21**
04:30 - 04:44	0	0	0	0	7	10	9	13	3	1	0	0	1	0	0	**44**
04:45 - 04:59	0	0	1	2	7	14	8	7	6	3	0	0	0	0	0	**48**
05:00 - 05:14	0	0	0	3	7	5	9	10	8	3	1	0	0	0	0	**46**
05:15 - 05:29	0	1	0	2	6	7	17	19	14	4	1	0	0	0	0	**71**
05:30 - 05:44	0	0	0	3	9	13	29	22	22	4	0	0	0	0	0	**102**
05:45 - 05:59	0	0	1	0	6	13	34	45	11	2	1	0	0	0	0	**113**
06:00 - 06:14	0	0	0	9	12	21	36	42	33	7	0	0	0	0	0	**160**
06:15 - 06:29	0	1	7	12	22	51	66	32	13	3	0	0	0	0	0	**207**
06:30 - 06:44	0	3	3	11	35	43	57	33	17	4	0	0	0	0	0	**206**
06:45 - 06:59	1	3	7	9	26	64	67	31	15	6	0	0	0	0	0	**229**
07:00 - 07:14	0	2	10	19	59	65	43	15	4	1	0	0	0	0	0	**218**
07:15 - 07:29	0	7	22	37	78	61	37	15	1	3	0	0	0	0	0	**261**
07:30 - 07:44	1	1	8	20	60	69	61	13	5	1	0	0	0	0	0	**239**
07:45 - 07:59	1	7	9	28	94	81	50	8	1	0	0	0	0	0	0	**279**
08:00 - 08:14	0	0	4	24	70	83	62	23	2	1	0	0	0	0	0	**269**
08:15 - 08:29	0	3	9	17	43	95	90	26	4	0	0	0	0	0	0	**287**
08:30 - 08:44	0	4	9	17	83	72	47	17	5	3	1	0	0	0	0	**258**
08:45 - 08:59	0	4	7	48	75	68	35	16	2	0	0	0	0	0	1	**256**
09:00 - 09:14	1	2	8	17	58	67	63	17	13	1	0	0	0	0	0	**247**
09:15 - 09:29	2	7	11	29	61	65	42	17	3	2	0	0	0	0	0	**239**
09:30 - 09:44	0	0	3	25	80	60	24	9	4	0	0	0	0	0	0	**205**
09:45 - 09:59	0	3	20	41	86	53	32	9	5	0	0	0	0	0	0	**249**
10:00 - 10:14	0	8	20	42	58	61	34	7	1	0	0	0	0	0	0	**231**
10:15 - 10:29	2	7	12	24	80	76	36	13	3	1	0	0	0	0	0	**254**
10:30 - 10:44	1	2	12	46	83	84	40	15	4	0	0	0	0	0	0	**287**
10:45 - 10:59	1	11	7	35	67	88	32	10	2	0	0	0	0	0	0	**253**
11:00 - 11:14	1	4	12	21	74	69	45	12	2	0	0	0	0	0	0	**240**
11:15 - 11:29	0	11	16	25	60	91	33	15	4	1	0	0	0	0	0	**256**
11:30 - 11:44	0	8	27	71	79	55	26	0	0	0	0	0	0	0	0	**266**
11:45 - 11:59	0	5	14	43	69	80	65	15	0	1	0	0	0	0	0	**292**
12:00 - 12:14	1	7	17	34	91	70	21	5	2	2	0	0	0	0	0	**250**
12:15 - 12:29	0	8	14	30	76	61	31	6	2	1	0	0	0	1	0	**230**
12:30 - 12:44	0	7	11	32	78	89	28	8	1	0	0	0	0	0	0	**254**

Daily Westbound Speeds (MPH)

Study Date: Thursday, 09/20/2018
Unit ID: 0222
Location: TAMIAMI TRAIL / W OF SW 69TH ST

	0-5	5-10	10-15	15-20	20-25	25-30	30-35	35-40	40-45	45-50	50-55	55-60	60-65	65-70	70-75	Total
12:45 - 12:59	0	4	18	49	87	63	34	6	2	0	0	0	0	0	0	**263**
13:00 - 13:14	7	16	15	35	54	56	30	10	0	0	0	0	0	0	0	**223**
13:15 - 13:29	0	5	24	45	82	53	14	2	1	2	0	0	0	0	0	**228**
13:30 - 13:44	8	12	26	39	105	63	15	6	0	1	0	0	0	0	0	**275**
13:45 - 13:59	2	14	40	42	46	8	5	2	1	0	0	0	0	0	0	**160**
14:00 - 14:14	3	16	42	30	11	3	0	0	0	0	0	0	0	0	0	**105**
14:15 - 14:29	1	6	15	49	70	22	4	0	0	1	0	0	0	0	0	**168**
14:30 - 14:44	6	15	22	41	52	28	12	4	1	0	0	0	0	0	0	**181**
14:45 - 14:59	6	16	30	14	1	0	0	0	0	0	0	0	0	0	0	**67**
15:00 - 15:14	9	16	28	50	10	0	0	0	0	1	0	0	1	0	0	**115**
15:15 - 15:29	1	20	34	29	8	0	0	0	0	1	0	0	0	0	0	**93**
15:30 - 15:44	11	10	29	45	42	19	3	0	0	0	1	0	0	0	0	**160**
15:45 - 15:59	0	4	13	23	76	49	6	3	2	0	0	0	0	0	0	**176**
16:00 - 16:14	0	5	29	95	100	31	2	0	1	0	0	0	0	0	0	**263**
16:15 - 16:29	5	15	25	12	5	0	0	0	0	0	0	0	0	0	0	**62**
16:30 - 16:44	6	21	42	30	19	2	0	0	0	0	0	0	0	0	0	**120**
16:45 - 16:59	0	18	30	31	34	22	18	9	1	1	0	0	0	0	0	**164**
17:00 - 17:14	4	14	14	20	17	9	12	10	1	0	0	0	0	0	0	**101**
17:15 - 17:29	13	20	24	21	5	0	0	0	0	0	0	0	0	0	0	**83**
17:30 - 17:44	3	21	36	24	2	0	0	0	0	0	0	0	0	0	0	**86**
17:45 - 17:59	5	18	22	8	0	0	0	0	0	0	0	0	0	0	0	**53**
18:00 - 18:14	6	35	23	14	8	1	0	1	0	0	0	0	1	0	0	**89**
18:15 - 18:29	3	11	20	26	35	3	1	1	0	0	0	0	0	0	0	**100**
18:30 - 18:44	2	2	8	29	86	33	1	0	0	0	0	0	0	0	0	**161**
18:45 - 18:59	8	3	6	31	86	48	32	17	3	0	0	0	0	0	0	**234**
19:00 - 19:14	1	9	15	47	98	59	22	4	1	0	0	0	0	0	0	**256**
19:15 - 19:29	3	6	13	35	97	53	20	6	2	0	0	0	0	0	0	**235**
19:30 - 19:44	3	3	17	41	57	44	23	7	3	1	0	0	0	0	0	**199**
19:45 - 19:59	3	4	14	25	60	42	19	6	2	0	0	0	0	0	0	**175**
20:00 - 20:14	0	9	6	27	54	51	31	12	3	2	0	0	0	0	0	**195**
20:15 - 20:29	7	5	14	18	55	59	34	10	1	0	0	0	0	0	0	**203**
20:30 - 20:44	1	1	11	19	41	73	28	9	2	0	0	0	0	0	0	**185**
20:45 - 20:59	0	4	12	23	49	50	42	12	4	0	1	0	0	0	1	**198**
21:00 - 21:14	0	2	6	21	58	79	51	9	4	3	0	0	0	0	0	**233**
21:15 - 21:29	2	9	6	15	27	47	55	23	5	2	0	0	0	0	0	**191**
21:30 - 21:44	3	7	18	38	38	31	17	4	3	0	0	0	0	0	0	**159**
21:45 - 21:59	0	10	10	28	46	29	25	5	5	0	0	0	0	0	0	**158**
22:00 - 22:14	0	0	3	14	65	54	40	18	3	0	0	0	0	0	0	**197**
22:15 - 22:29	1	4	8	15	27	41	38	14	2	1	0	0	0	0	0	**151**
22:30 - 22:44	3	5	13	23	29	17	22	13	3	0	0	0	0	0	0	**128**
22:45 - 22:59	1	4	19	19	25	48	37	12	2	1	0	0	0	0	0	**168**
23:00 - 23:14	0	4	7	24	29	39	30	18	2	1	0	0	0	0	0	**154**
23:15 - 23:29	1	1	11	24	19	21	20	12	7	1	1	0	0	0	0	**118**
23:30 - 23:44	4	6	13	11	21	18	20	12	5	1	1	0	0	0	0	**112**
23:45 - 23:59	0	5	6	11	15	14	18	14	8	3	0	0	0	0	0	**94**
Totals	**154**	**563**	**1145**	**2125**	**3845**	**3423**	**2271**	**990**	**359**	**99**	**15**	**1**	**3**	**1**	**2**	**14996**
Percent of Total	**1.0**	**3.8**	**7.6**	**14.2**	**25.6**	**22.8**	**15.1**	**6.6**	**2.4**	**0.7**	**0.1**	**0.0**	**0.0**	**0.0**	**0.0**	**100**
Percent of AM	**0.2**	**1.5**	**3.8**	**10.2**	**23.5**	**25.9**	**20.1**	**9.7**	**3.9**	**1.0**	**0.2**	**0.0**	**0.0**	**0.0**	**0.0**	**100**
Percent of PM	**1.8**	**5.7**	**11.0**	**17.6**	**27.5**	**20.1**	**10.8**	**3.9**	**1.1**	**0.3**	**0.1**	**0.0**	**0.0**	**0.0**	**0.0**	**100**

Daily Westbound Speeds (MPH)

Study Date: Thursday, 09/20/2018
Unit ID: 0222
Location: TAMIAMI TRAIL / W OF SW 69TH ST

Standard Deviation:	8.6 MPH	Ten Mile Pace:	20 to 29 MPH	85th Percentile:	33.9 MPH
Mean Speed:	25.1 MPH	Percent in Ten Mile Pace:	48.5%	15th Percentile:	16.1 MPH
Median Speed:	25.5 MPH			90th Percentile:	35.9 MPH
Modal Speed:	23.0 MPH			95th Percentile:	39.4 MPH

Daily Eastbound Speeds (MPH)

Study Date: Tuesday, 09/18/2018
Unit ID: 0109
Location: SW 4TH ST W OF SW 69TH AV

	0-5	5-10	10-15	15-20	20-25	25-30	30-35	35-40	40-45	45-50	50-55	55-60	60-65	65-70	70-75	Total
00:00 - 00:14	0	0	0	1	0	0	0	0	0	0	0	0	0	0	0	**1**
00:15 - 00:29	0	0	0	0	0	1	0	0	0	0	0	0	0	0	0	**1**
00:30 - 00:44	0	0	0	1	0	1	1	0	0	0	0	0	0	0	0	**3**
00:45 - 00:59	0	0	0	0	0	0	1	0	0	0	0	0	0	0	0	**1**
01:00 - 01:14	0	0	0	0	0	0	0	0	0	0	0	0	0	0	0	**0**
01:15 - 01:29	0	0	1	0	0	1	0	0	0	0	0	0	0	0	0	**2**
01:30 - 01:44	0	0	0	0	1	1	0	0	0	0	0	0	0	0	0	**2**
01:45 - 01:59	0	0	0	0	0	0	0	0	0	0	0	0	0	0	0	**0**
02:00 - 02:14	0	0	0	0	1	0	0	0	0	0	0	0	0	0	0	**1**
02:15 - 02:29	0	0	0	0	1	0	0	0	0	0	0	0	0	0	0	**1**
02:30 - 02:44	0	0	0	0	0	0	0	0	0	0	0	0	0	0	0	**0**
02:45 - 02:59	0	0	0	0	0	0	0	0	0	0	0	0	0	0	0	**0**
03:00 - 03:14	0	0	0	0	1	1	0	0	0	0	0	0	0	0	0	**2**
03:15 - 03:29	0	0	0	0	0	1	0	0	0	0	0	0	0	0	0	**1**
03:30 - 03:44	0	0	0	0	0	0	0	0	0	0	0	0	0	0	0	**0**
03:45 - 03:59	0	0	1	0	0	1	0	0	0	0	0	0	0	0	0	**2**
04:00 - 04:14	0	0	0	0	1	0	0	0	0	0	0	0	0	0	0	**1**
04:15 - 04:29	0	0	0	0	1	0	0	0	0	0	0	0	0	0	0	**1**
04:30 - 04:44	0	0	0	0	1	0	0	0	0	0	0	0	0	0	0	**1**
04:45 - 04:59	0	0	2	1	0	1	0	0	0	0	0	0	0	0	0	**4**
05:00 - 05:14	0	0	0	1	1	0	0	0	0	0	0	0	0	0	0	**2**
05:15 - 05:29	0	1	0	3	2	0	0	0	0	0	0	0	0	0	0	**6**
05:30 - 05:44	0	0	3	2	1	1	0	0	0	0	0	0	0	0	0	**7**
05:45 - 05:59	0	0	2	3	1	0	0	0	0	0	0	0	0	0	0	**6**
06:00 - 06:14	0	1	7	7	4	0	0	0	0	0	0	0	0	0	0	**19**
06:15 - 06:29	0	0	12	0	9	4	0	0	0	0	0	0	0	0	0	**25**
06:30 - 06:44	0	0	3	8	15	3	1	0	0	0	0	0	0	0	0	**30**
06:45 - 06:59	0	1	0	4	22	6	0	0	0	0	0	0	0	0	0	**33**
07:00 - 07:14	0	1	6	10	28	9	1	0	0	0	0	0	0	0	0	**55**
07:15 - 07:29	0	4	2	8	41	7	3	1	0	0	0	0	0	0	0	**66**
07:30 - 07:44	0	1	6	22	28	13	3	0	0	0	0	0	0	0	0	**73**
07:45 - 07:59	0	1	6	19	36	11	0	0	0	0	0	0	0	0	0	**73**
08:00 - 08:14	0	6	8	47	28	12	1	0	0	0	0	0	0	0	0	**102**
08:15 - 08:29	0	16	19	19	33	6	0	0	1	0	0	0	0	0	0	**94**
08:30 - 08:44	0	7	17	36	31	13	1	0	0	0	0	0	0	0	0	**105**
08:45 - 08:59	1	4	10	32	52	8	1	0	0	0	0	0	0	0	0	**108**
09:00 - 09:14	2	9	19	55	25	4	0	0	0	0	0	0	0	0	0	**114**
09:15 - 09:29	0	1	11	40	49	4	2	0	0	0	0	0	0	0	0	**107**
09:30 - 09:44	0	0	9	29	29	7	0	0	0	0	0	0	0	0	0	**74**
09:45 - 09:59	0	0	8	25	33	4	2	0	0	0	0	0	0	0	0	**72**
10:00 - 10:14	0	2	4	10	26	10	1	0	0	0	0	0	0	0	0	**53**
10:15 - 10:29	1	3	3	22	26	10	1	1	0	0	0	0	0	0	0	**67**
10:30 - 10:44	0	1	10	20	16	5	0	1	0	0	0	0	0	0	0	**53**
10:45 - 10:59	0	1	10	21	23	1	1	0	0	0	0	0	0	0	0	**57**
11:00 - 11:14	1	0	2	12	23	7	0	0	0	0	0	0	0	0	0	**45**
11:15 - 11:29	0	3	4	15	21	8	1	0	0	0	0	0	0	0	0	**52**
11:30 - 11:44	0	0	11	14	25	10	2	0	0	0	0	0	0	0	0	**62**
11:45 - 11:59	0	1	8	17	27	7	3	0	0	0	0	0	0	0	0	**63**
12:00 - 12:14	0	5	3	24	23	2	0	0	0	0	0	0	0	0	0	**57**
12:15 - 12:29	0	0	5	26	23	6	0	0	0	0	0	0	0	0	0	**60**
12:30 - 12:44	0	3	7	23	33	5	2	0	0	0	0	0	0	0	0	**73**

Daily Eastbound Speeds (MPH)

Study Date: Tuesday, 09/18/2018
Unit ID: 0109
Location: SW 4TH ST W OF SW 69TH AV

	0-5	5-10	10-15	15-20	20-25	25-30	30-35	35-40	40-45	45-50	50-55	55-60	60-65	65-70	70-75	Total
12:45 - 12:59	0	1	11	25	24	3	0	0	0	0	0	0	0	0	0	**64**
13:00 - 13:14	1	3	8	25	26	5	0	0	0	0	0	0	0	0	0	**68**
13:15 - 13:29	0	3	6	15	32	5	1	2	1	0	0	0	0	0	0	**65**
13:30 - 13:44	0	2	8	10	23	8	0	0	0	0	0	0	0	0	0	**51**
13:45 - 13:59	0	2	7	18	22	5	0	0	0	0	0	0	0	0	0	**54**
14:00 - 14:14	0	0	4	16	38	10	1	0	0	0	0	0	0	0	0	**69**
14:15 - 14:29	0	1	5	6	22	8	2	0	0	0	0	0	0	0	0	**44**
14:30 - 14:44	0	0	3	13	31	10	2	0	0	0	0	0	0	0	0	**59**
14:45 - 14:59	0	0	3	15	23	13	3	0	0	0	0	0	0	0	0	**57**
15:00 - 15:14	0	0	1	13	22	11	1	1	0	0	0	0	0	0	0	**49**
15:15 - 15:29	0	1	6	16	21	14	2	0	0	0	1	0	0	0	0	**61**
15:30 - 15:44	0	0	4	10	39	11	2	0	0	0	0	0	0	0	0	**66**
15:45 - 15:59	0	1	7	22	25	8	5	0	0	0	0	1	0	0	0	**69**
16:00 - 16:14	2	3	3	21	29	20	1	1	0	0	0	0	0	0	0	**80**
16:15 - 16:29	0	1	3	20	35	12	2	0	0	1	0	0	0	1	0	**75**
16:30 - 16:44	0	0	6	17	31	10	0	0	0	0	0	0	0	0	0	**64**
16:45 - 16:59	0	2	4	23	38	8	1	0	0	0	0	0	0	0	0	**76**
17:00 - 17:14	0	7	8	25	25	11	0	0	0	0	0	0	0	0	0	**76**
17:15 - 17:29	0	2	2	18	31	11	3	2	0	0	0	0	0	0	0	**69**
17:30 - 17:44	1	0	6	18	28	7	4	1	1	0	0	0	0	0	0	**66**
17:45 - 17:59	0	1	4	15	25	21	0	0	0	0	0	0	0	0	0	**66**
18:00 - 18:14	0	0	3	8	37	16	2	0	0	0	0	0	0	0	0	**66**
18:15 - 18:29	0	0	2	7	29	3	4	0	0	0	0	0	0	0	0	**45**
18:30 - 18:44	0	1	2	6	26	15	0	0	0	0	0	0	0	0	0	**50**
18:45 - 18:59	0	1	8	13	21	7	0	0	0	0	1	0	0	0	0	**51**
19:00 - 19:14	0	0	2	11	25	5	1	0	0	0	0	0	0	0	0	**44**
19:15 - 19:29	0	1	3	7	32	5	0	0	0	0	0	0	0	0	0	**48**
19:30 - 19:44	0	0	1	12	9	7	1	0	1	0	0	0	0	0	0	**31**
19:45 - 19:59	0	0	0	8	17	8	0	0	0	0	0	0	0	0	0	**33**
20:00 - 20:14	0	0	3	9	21	7	0	0	0	0	0	0	0	0	0	**40**
20:15 - 20:29	0	0	0	4	9	9	1	0	0	0	0	0	0	0	0	**23**
20:30 - 20:44	0	0	0	10	16	9	2	0	0	0	0	0	0	0	0	**37**
20:45 - 20:59	0	0	1	5	9	8	1	0	0	0	0	0	0	0	0	**24**
21:00 - 21:14	0	0	0	6	9	4	0	1	0	0	0	0	0	0	0	**20**
21:15 - 21:29	0	0	0	1	18	10	1	0	0	0	0	0	0	0	0	**30**
21:30 - 21:44	0	0	0	3	10	5	0	0	0	0	0	0	0	0	0	**18**
21:45 - 21:59	0	0	0	5	6	8	1	0	0	0	0	0	0	0	0	**20**
22:00 - 22:14	0	0	0	1	6	4	1	0	0	0	0	0	0	0	0	**12**
22:15 - 22:29	0	0	0	3	4	3	1	0	0	0	0	0	0	0	0	**11**
22:30 - 22:44	0	0	0	3	7	2	1	0	0	0	0	0	0	0	0	**13**
22:45 - 22:59	0	0	0	1	4	2	1	0	0	0	0	0	0	0	0	**8**
23:00 - 23:14	0	0	2	4	2	0	2	0	0	0	0	0	0	0	0	**10**
23:15 - 23:29	0	0	0	1	2	3	1	1	0	0	0	0	0	0	0	**8**
23:30 - 23:44	0	0	0	1	1	1	0	0	0	0	0	0	0	0	0	**3**
23:45 - 23:59	0	0	1	0	4	1	0	0	0	0	0	0	0	0	0	**6**
Totals	**9**	**105**	**356**	**1067**	**1655**	**544**	**79**	**12**	**4**	**1**	**2**	**1**	**0**	**1**	**0**	**3836**
Percent of Total	**0.2**	**2.7**	**9.3**	**27.8**	**43.1**	**14.2**	**2.1**	**0.3**	**0.1**	**0.0**	**0.1**	**0.0**	**0.0**	**0.0**	**0.0**	**100**
Percent of AM	**0.3**	**3.9**	**12.4**	**30.6**	**40.2**	**10.8**	**1.6**	**0.2**	**0.1**	**0.0**	**0.0**	**0.0**	**0.0**	**0.0**	**0.0**	**100**
Percent of PM	**0.2**	**1.9**	**6.9**	**25.7**	**45.4**	**16.7**	**2.4**	**0.4**	**0.1**	**0.0**	**0.1**	**0.0**	**0.0**	**0.0**	**0.0**	**100**

Daily Eastbound Speeds (MPH)

Study Date: Tuesday, 09/18/2018
Unit ID: 0109
Location: SW 4TH ST W OF SW 69TH AV

Standard Deviation:	5.6 MPH	Ten Mile Pace:	15 to 24 MPH	85th Percentile:	25.8 MPH
Mean Speed:	21.2 MPH	Percent in Ten Mile Pace:	71.0%	15th Percentile:	15.6 MPH
Median Speed:	21.4 MPH			90th Percentile:	27.9 MPH
Modal Speed:	23.0 MPH			95th Percentile:	30.0 MPH

Daily Eastbound Speeds (MPH)

Study Date: Wednesday, 09/19/2018
Unit ID: 0109
Location: SW 4TH ST W OF SW 69TH AV

	0-5	5-10	10-15	15-20	20-25	25-30	30-35	35-40	40-45	45-50	50-55	55-60	60-65	65-70	70-75	Total
00:00 - 00:14	0	0	0	0	0	1	0	0	0	0	0	0	0	0	0	**1**
00:15 - 00:29	0	0	0	0	1	1	1	0	0	0	0	0	0	0	0	**3**
00:30 - 00:44	0	0	1	1	0	0	0	0	0	0	0	0	0	0	0	**2**
00:45 - 00:59	0	0	1	2	1	0	0	0	0	0	0	0	0	0	0	**4**
01:00 - 01:14	0	0	0	0	2	1	0	0	0	0	0	0	0	0	0	**3**
01:15 - 01:29	0	0	0	0	0	1	0	1	0	0	0	0	0	0	0	**2**
01:30 - 01:44	0	0	0	0	3	0	0	0	0	0	0	0	0	0	0	**3**
01:45 - 01:59	0	0	0	0	2	1	0	0	0	0	0	0	0	0	0	**3**
02:00 - 02:14	0	0	0	0	3	0	0	0	0	0	0	0	0	0	0	**3**
02:15 - 02:29	0	0	0	0	0	0	0	0	0	0	0	0	0	0	0	**0**
02:30 - 02:44	0	0	0	0	0	0	0	0	0	0	0	0	0	0	0	**0**
02:45 - 02:59	0	0	0	0	0	0	0	0	0	0	0	0	0	0	0	**0**
03:00 - 03:14	0	0	0	0	0	0	0	0	0	0	0	0	0	0	0	**0**
03:15 - 03:29	0	0	0	0	0	0	0	0	0	0	0	0	0	0	0	**0**
03:30 - 03:44	0	0	0	0	1	1	0	0	0	0	0	0	0	0	0	**2**
03:45 - 03:59	0	0	0	1	0	2	0	0	0	0	0	0	0	0	0	**3**
04:00 - 04:14	0	0	0	0	0	0	0	0	0	0	0	0	0	0	0	**0**
04:15 - 04:29	0	0	0	0	0	1	0	0	0	0	0	0	0	0	0	**1**
04:30 - 04:44	0	0	0	0	1	0	0	0	0	0	0	0	0	0	0	**1**
04:45 - 04:59	0	0	0	2	1	1	0	0	0	0	0	0	0	0	0	**4**
05:00 - 05:14	0	0	0	1	2	0	0	0	0	0	0	0	0	0	0	**3**
05:15 - 05:29	0	0	1	0	1	0	0	0	0	0	0	0	0	0	0	**2**
05:30 - 05:44	0	0	0	1	3	0	1	0	0	0	0	0	0	0	0	**5**
05:45 - 05:59	0	0	1	0	1	2	1	0	0	0	0	0	0	0	0	**5**
06:00 - 06:14	0	1	3	0	3	3	0	0	0	0	0	0	0	0	0	**10**
06:15 - 06:29	0	1	4	3	8	6	2	0	0	0	0	0	0	0	0	**24**
06:30 - 06:44	0	0	2	6	11	5	0	0	0	0	0	0	0	0	0	**24**
06:45 - 06:59	0	0	1	5	10	8	1	0	0	0	0	0	0	0	0	**25**
07:00 - 07:14	0	0	4	4	25	11	4	1	0	0	0	0	1	0	0	**50**
07:15 - 07:29	0	1	8	25	25	13	1	0	0	0	0	0	0	0	0	**73**
07:30 - 07:44	0	1	4	16	50	9	2	0	0	0	0	0	0	0	0	**82**
07:45 - 07:59	0	1	2	10	42	11	2	1	0	0	0	0	0	0	0	**69**
08:00 - 08:14	0	3	13	20	56	9	0	0	0	1	0	0	0	0	0	**102**
08:15 - 08:29	0	1	4	11	51	24	4	0	0	0	1	0	0	0	0	**96**
08:30 - 08:44	0	1	3	24	45	21	8	0	0	0	1	0	1	0	0	**104**
08:45 - 08:59	0	0	3	15	45	18	4	0	0	0	0	0	0	0	0	**85**
09:00 - 09:14	0	0	4	16	40	8	1	0	0	0	0	0	0	0	0	**69**
09:15 - 09:29	0	1	7	13	27	12	1	0	0	0	0	0	0	0	0	**61**
09:30 - 09:44	2	2	14	17	11	2	2	0	0	0	0	0	0	0	0	**50**
09:45 - 09:59	0	0	4	9	21	5	0	0	1	0	0	0	0	0	0	**40**
10:00 - 10:14	0	0	6	14	24	7	1	0	0	0	0	0	0	0	0	**52**
10:15 - 10:29	0	2	8	15	18	7	0	0	0	0	0	0	0	0	0	**50**
10:30 - 10:44	0	0	3	16	25	2	1	0	0	0	0	0	0	0	0	**47**
10:45 - 10:59	0	4	8	11	26	8	0	0	0	0	0	0	0	0	0	**57**
11:00 - 11:14	0	0	7	10	22	5	0	0	0	0	0	0	0	0	0	**44**
11:15 - 11:29	0	1	5	11	26	4	3	0	0	0	0	0	0	1	0	**51**
11:30 - 11:44	0	1	7	25	19	11	0	0	0	0	0	0	0	0	0	**63**
11:45 - 11:59	0	4	1	18	15	9	3	0	0	0	0	0	0	0	0	**50**
12:00 - 12:14	0	1	4	17	33	9	0	0	0	0	0	0	0	0	0	**64**
12:15 - 12:29	0	0	3	19	38	9	0	0	0	0	0	0	0	0	0	**69**
12:30 - 12:44	0	1	5	13	33	8	2	0	0	0	0	0	0	0	0	**62**

Daily Eastbound Speeds (MPH)

Study Date: Wednesday, 09/19/2018
Unit ID: 0109
Location: SW 4TH ST W OF SW 69TH AV

	0-5	5-10	10-15	15-20	20-25	25-30	30-35	35-40	40-45	45-50	50-55	55-60	60-65	65-70	70-75	Total
12:45 - 12:59	0	0	6	12	21	6	0	1	0	1	0	0	0	0	0	**47**
13:00 - 13:14	0	1	2	14	26	11	1	0	0	0	0	0	0	0	0	**55**
13:15 - 13:29	0	0	2	21	16	11	3	0	0	0	0	0	0	0	0	**53**
13:30 - 13:44	0	0	6	12	32	10	0	0	0	0	0	0	0	0	0	**60**
13:45 - 13:59	1	1	5	8	24	12	0	0	0	0	0	0	0	0	0	**51**
14:00 - 14:14	0	0	8	18	35	3	3	0	0	0	0	0	0	0	0	**67**
14:15 - 14:29	0	0	4	15	24	4	2	0	0	1	0	0	0	0	0	**50**
14:30 - 14:44	0	1	1	11	24	10	1	0	0	0	0	0	0	0	0	**48**
14:45 - 14:59	0	1	6	12	31	13	3	0	0	0	0	0	0	0	0	**66**
15:00 - 15:14	0	0	1	10	27	17	2	2	0	0	0	0	0	0	0	**59**
15:15 - 15:29	0	0	4	14	31	11	3	0	0	0	0	0	0	0	0	**63**
15:30 - 15:44	0	1	0	7	27	19	5	0	0	0	0	0	0	1	0	**60**
15:45 - 15:59	0	1	2	12	35	12	0	0	0	0	0	1	0	0	0	**63**
16:00 - 16:14	0	0	1	12	32	16	2	1	1	0	0	0	0	0	0	**65**
16:15 - 16:29	2	0	3	7	31	14	1	0	0	0	0	0	0	0	0	**58**
16:30 - 16:44	0	0	3	5	29	19	3	0	0	0	0	0	0	0	0	**59**
16:45 - 16:59	0	1	4	19	34	14	4	0	1	0	0	0	0	0	0	**77**
17:00 - 17:14	0	1	5	16	31	14	3	0	0	0	0	0	0	0	0	**70**
17:15 - 17:29	0	0	1	8	30	17	2	0	0	0	0	0	0	0	0	**58**
17:30 - 17:44	0	1	6	11	35	13	2	0	0	1	0	0	0	0	1	**70**
17:45 - 17:59	0	1	8	12	23	10	4	1	0	0	0	0	1	0	0	**60**
18:00 - 18:14	0	0	0	6	28	12	2	1	0	0	1	0	0	0	1	**51**
18:15 - 18:29	0	1	3	13	25	5	1	1	0	0	0	0	0	0	0	**49**
18:30 - 18:44	0	1	1	6	21	11	3	0	0	0	0	0	0	0	0	**43**
18:45 - 18:59	0	0	3	11	29	10	0	0	0	0	0	0	0	0	0	**53**
19:00 - 19:14	0	1	1	9	36	14	2	0	0	0	0	0	0	0	0	**63**
19:15 - 19:29	0	0	1	9	23	8	2	0	0	0	0	0	0	0	0	**43**
19:30 - 19:44	0	0	1	8	22	12	1	1	0	0	0	0	0	0	0	**45**
19:45 - 19:59	0	0	0	10	15	9	2	0	0	0	0	0	0	0	0	**36**
20:00 - 20:14	0	0	1	3	18	14	2	0	0	0	0	0	0	0	0	**38**
20:15 - 20:29	0	0	2	7	11	10	1	0	0	0	0	0	0	0	0	**31**
20:30 - 20:44	0	0	2	5	12	8	0	1	0	0	0	0	0	0	0	**28**
20:45 - 20:59	0	0	1	3	16	6	0	0	0	0	0	0	0	0	0	**26**
21:00 - 21:14	0	0	1	4	12	4	1	0	0	0	0	0	0	0	0	**22**
21:15 - 21:29	0	0	1	5	6	5	1	1	0	0	0	0	0	0	0	**19**
21:30 - 21:44	0	1	3	2	7	3	1	0	0	0	0	0	0	0	0	**17**
21:45 - 21:59	0	0	1	3	8	5	2	0	0	0	0	0	0	0	0	**19**
22:00 - 22:14	0	0	0	4	8	4	0	0	0	0	0	0	0	0	0	**16**
22:15 - 22:29	0	0	0	0	6	4	0	0	0	0	0	0	0	0	0	**10**
22:30 - 22:44	0	0	0	1	2	1	1	1	0	0	0	0	0	0	0	**6**
22:45 - 22:59	0	0	0	2	4	3	0	0	0	0	0	0	0	0	0	**9**
23:00 - 23:14	0	0	0	1	5	1	0	0	0	0	0	0	0	0	0	**7**
23:15 - 23:29	0	0	0	0	2	0	1	0	0	0	0	0	0	0	0	**3**
23:30 - 23:44	0	0	0	1	8	3	0	0	0	0	0	0	0	0	0	**12**
23:45 - 23:59	0	0	0	2	2	3	1	0	0	0	0	0	0	0	0	**8**
Totals	**5**	**41**	**241**	**742**	**1695**	**667**	**113**	**14**	**3**	**4**	**3**	**1**	**3**	**2**	**2**	**3536**
Percent of Total	**0.1**	**1.2**	**6.8**	**21.0**	**47.9**	**18.9**	**3.2**	**0.4**	**0.1**	**0.1**	**0.1**	**0.0**	**0.1**	**0.1**	**0.1**	**100**
Percent of AM	**0.1**	**1.8**	**9.0**	**22.5**	**46.7**	**16.1**	**3.0**	**0.2**	**0.1**	**0.1**	**0.1**	**0.0**	**0.1**	**0.1**	**0.0**	**100**
Percent of PM	**0.1**	**0.8**	**5.3**	**19.9**	**48.8**	**20.7**	**3.3**	**0.5**	**0.1**	**0.1**	**0.0**	**0.0**	**0.0**	**0.0**	**0.1**	**100**

Daily Eastbound Speeds (MPH)

Study Date: Wednesday, 09/19/2018
Unit ID: 0109
Location: SW 4TH ST W OF SW 69TH AV

Standard Deviation:	5.7 MPH	Ten Mile Pace:	15 to 24 MPH	85th Percentile:	27.5 MPH
Mean Speed:	22.6 MPH	Percent in Ten Mile Pace:	68.9%		
Median Speed:	22.6 MPH			15th Percentile:	17.0 MPH
Modal Speed:	23.0 MPH			90th Percentile:	29.1 MPH
				95th Percentile:	30.7 MPH

Daily Eastbound Speeds (MPH)

Study Date: Thursday, 09/20/2018
Unit ID: 0109
Location: SW 4TH ST W OF SW 69TH AV

	0-5	5-10	10-15	15-20	20-25	25-30	30-35	35-40	40-45	45-50	50-55	55-60	60-65	65-70	70-75	Total
00:00 - 00:14	0	0	0	0	5	1	0	0	0	0	0	0	0	0	0	**6**
00:15 - 00:29	0	0	0	0	4	1	1	1	0	0	0	0	0	0	0	**7**
00:30 - 00:44	0	0	0	1	4	0	0	0	0	0	0	0	0	0	0	**5**
00:45 - 00:59	0	0	0	0	0	0	0	0	0	0	0	0	0	0	0	**0**
01:00 - 01:14	0	0	0	1	0	0	0	0	0	0	0	0	0	0	0	**1**
01:15 - 01:29	0	0	0	0	0	0	1	1	0	0	0	0	0	0	0	**2**
01:30 - 01:44	0	0	0	0	0	0	0	0	0	0	0	0	0	0	0	**0**
01:45 - 01:59	0	0	0	0	2	1	0	0	0	0	0	0	0	0	0	**3**
02:00 - 02:14	0	0	0	0	0	0	0	0	0	0	0	0	0	0	0	**0**
02:15 - 02:29	0	0	0	0	0	0	0	0	0	0	0	0	0	0	0	**0**
02:30 - 02:44	0	0	0	0	0	1	0	0	0	0	0	0	0	0	0	**1**
02:45 - 02:59	0	0	0	0	1	0	0	0	0	0	0	0	0	0	0	**1**
03:00 - 03:14	0	0	0	0	4	0	0	0	0	0	0	0	0	0	0	**4**
03:15 - 03:29	0	0	0	0	0	0	0	0	0	0	0	0	0	0	0	**0**
03:30 - 03:44	0	0	0	0	0	1	0	0	0	0	0	0	0	0	0	**1**
03:45 - 03:59	0	0	1	0	1	0	0	0	0	0	0	0	0	0	0	**2**
04:00 - 04:14	0	0	0	1	0	0	0	0	0	0	0	0	0	0	0	**1**
04:15 - 04:29	0	0	0	0	1	0	0	0	0	0	0	0	0	0	0	**1**
04:30 - 04:44	0	0	0	0	0	0	0	0	0	0	0	0	0	0	0	**0**
04:45 - 04:59	0	0	1	0	0	0	0	0	0	0	0	0	0	0	0	**1**
05:00 - 05:14	0	0	2	2	0	0	0	1	0	0	0	0	0	0	0	**5**
05:15 - 05:29	0	0	1	3	2	3	0	0	0	0	0	0	0	0	0	**9**
05:30 - 05:44	0	0	0	6	1	1	0	0	0	0	0	0	0	0	0	**8**
05:45 - 05:59	0	0	4	0	1	0	0	0	0	0	0	0	0	0	0	**5**
06:00 - 06:14	0	0	8	5	3	4	0	0	0	0	0	0	0	0	0	**20**
06:15 - 06:29	0	2	5	3	7	1	0	0	0	0	0	0	0	0	0	**18**
06:30 - 06:44	0	1	3	11	14	7	0	0	0	0	0	0	0	0	0	**36**
06:45 - 06:59	0	0	2	12	24	11	0	1	0	1	0	0	0	0	0	**51**
07:00 - 07:14	0	0	12	7	26	15	0	1	0	0	0	0	0	0	0	**61**
07:15 - 07:29	0	2	15	15	24	8	1	0	0	0	0	0	0	0	0	**65**
07:30 - 07:44	0	0	11	32	28	9	2	1	0	0	0	0	0	0	0	**83**
07:45 - 07:59	0	2	4	31	35	12	3	1	0	0	0	0	0	1	0	**89**
08:00 - 08:14	0	3	6	56	47	8	3	0	0	0	0	0	0	0	0	**123**
08:15 - 08:29	0	0	1	15	51	18	1	0	0	0	0	0	0	0	0	**86**
08:30 - 08:44	2	9	13	30	35	10	1	0	0	0	1	0	0	0	0	**101**
08:45 - 08:59	0	5	20	52	36	12	1	0	0	0	0	0	0	0	0	**126**
09:00 - 09:14	0	1	11	22	39	6	2	0	0	0	0	0	0	0	0	**81**
09:15 - 09:29	0	2	8	32	38	7	3	0	0	0	0	0	0	0	0	**90**
09:30 - 09:44	0	1	2	16	37	12	1	0	0	0	0	0	0	0	0	**69**
09:45 - 09:59	0	0	9	8	26	9	1	0	0	0	0	0	0	0	0	**53**
10:00 - 10:14	0	0	5	19	34	8	0	0	0	0	0	0	0	0	0	**66**
10:15 - 10:29	0	1	2	16	22	8	2	0	0	0	0	0	0	0	0	**51**
10:30 - 10:44	0	2	8	15	26	4	1	0	0	0	0	0	0	0	0	**56**
10:45 - 10:59	1	1	7	24	22	3	0	0	0	0	0	0	0	0	0	**58**
11:00 - 11:14	1	1	3	9	26	10	3	0	0	0	0	0	0	0	0	**53**
11:15 - 11:29	0	1	11	21	22	2	0	1	0	0	0	0	0	0	0	**58**
11:30 - 11:44	0	1	15	22	22	13	0	0	0	0	0	0	0	0	0	**73**
11:45 - 11:59	0	0	13	20	25	5	4	0	0	0	0	0	0	0	0	**67**
12:00 - 12:14	0	1	4	26	20	10	0	0	1	0	0	0	0	0	0	**62**
12:15 - 12:29	0	0	5	13	27	8	2	0	0	0	0	0	0	0	0	**55**
12:30 - 12:44	0	0	2	21	22	11	0	0	0	0	0	0	0	0	0	**56**

Daily Eastbound Speeds (MPH)

Study Date: Thursday, 09/20/2018
Unit ID: 0109
Location: SW 4TH ST W OF SW 69TH AV

	0-5	5-10	10-15	15-20	20-25	25-30	30-35	35-40	40-45	45-50	50-55	55-60	60-65	65-70	70-75	Total
12:45 - 12:59	0	1	6	21	24	7	0	0	0	0	0	0	0	0	0	**59**
13:00 - 13:14	0	3	9	18	27	11	0	0	0	0	0	0	0	0	0	**68**
13:15 - 13:29	1	2	12	16	27	16	1	0	0	0	0	0	0	0	0	**75**
13:30 - 13:44	0	0	9	28	18	4	1	0	0	0	0	0	0	0	0	**60**
13:45 - 13:59	0	0	6	12	24	12	3	0	0	0	0	0	0	0	0	**57**
14:00 - 14:14	0	1	6	13	26	4	2	0	0	0	0	0	0	0	0	**52**
14:15 - 14:29	0	0	1	16	18	10	3	0	0	0	0	0	0	0	0	**48**
14:30 - 14:44	0	0	5	12	26	17	1	1	0	0	0	0	0	0	0	**62**
14:45 - 14:59	0	1	8	13	32	15	0	0	0	0	0	0	0	0	0	**69**
15:00 - 15:14	0	0	5	14	26	10	3	0	0	0	0	0	0	0	0	**58**
15:15 - 15:29	0	1	8	18	22	11	0	1	0	0	0	0	0	0	0	**61**
15:30 - 15:44	0	2	9	24	29	3	0	1	0	0	0	0	0	0	0	**68**
15:45 - 15:59	0	0	7	20	25	13	1	0	0	0	0	0	0	0	0	**66**
16:00 - 16:14	0	0	12	19	24	9	2	1	0	0	0	0	0	0	0	**67**
16:15 - 16:29	1	1	10	20	26	5	1	0	0	0	0	0	0	0	0	**64**
16:30 - 16:44	0	1	8	23	24	8	3	1	0	1	0	0	0	1	0	**70**
16:45 - 16:59	0	2	11	22	31	9	2	0	0	0	0	0	0	0	0	**77**
17:00 - 17:14	0	1	3	29	14	13	3	0	0	0	0	0	0	0	0	**63**
17:15 - 17:29	0	2	6	18	24	8	3	1	0	0	0	0	0	0	0	**62**
17:30 - 17:44	0	1	5	13	29	12	2	0	0	0	0	0	0	0	0	**62**
17:45 - 17:59	0	0	1	12	35	13	2	0	0	0	0	0	1	0	0	**64**
18:00 - 18:14	0	1	2	15	22	12	2	0	0	0	1	0	0	0	0	**55**
18:15 - 18:29	0	1	1	11	47	10	0	0	0	0	0	0	0	0	0	**70**
18:30 - 18:44	2	3	5	18	30	5	1	0	0	0	0	0	0	0	0	**64**
18:45 - 18:59	0	0	4	12	27	10	1	0	0	0	0	0	0	0	0	**54**
19:00 - 19:14	0	0	2	5	31	12	3	0	0	0	0	0	0	0	0	**53**
19:15 - 19:29	0	1	1	7	16	8	1	0	0	0	0	0	0	0	0	**34**
19:30 - 19:44	0	1	0	7	18	6	1	0	0	0	0	0	0	0	0	**33**
19:45 - 19:59	0	0	1	9	19	12	0	0	0	0	0	0	0	0	0	**41**
20:00 - 20:14	0	0	0	11	15	4	0	0	0	0	0	0	0	0	0	**30**
20:15 - 20:29	0	0	1	8	24	11	4	0	0	0	0	0	0	0	0	**48**
20:30 - 20:44	0	1	1	14	10	6	4	0	0	0	0	0	0	0	0	**36**
20:45 - 20:59	0	0	0	3	10	7	0	1	0	0	0	0	0	0	0	**21**
21:00 - 21:14	0	0	0	3	6	3	1	1	0	0	0	0	0	0	0	**14**
21:15 - 21:29	0	0	0	3	12	4	0	0	0	0	0	0	0	0	0	**19**
21:30 - 21:44	0	0	1	3	7	3	1	0	0	0	0	0	0	0	0	**15**
21:45 - 21:59	0	1	0	7	6	4	1	0	0	0	0	0	0	0	0	**19**
22:00 - 22:14	0	0	1	2	7	2	1	0	0	0	0	0	0	0	0	**13**
22:15 - 22:29	0	0	0	1	11	4	1	0	0	0	0	0	0	0	0	**17**
22:30 - 22:44	0	0	0	2	5	5	1	0	1	0	0	0	0	0	0	**14**
22:45 - 22:59	0	0	0	2	3	3	1	2	0	0	0	0	0	0	0	**11**
23:00 - 23:14	0	0	1	3	5	1	0	0	0	0	0	0	0	0	0	**10**
23:15 - 23:29	0	0	0	2	4	3	0	0	0	0	0	0	0	0	0	**9**
23:30 - 23:44	0	0	0	1	4	0	0	0	0	0	0	0	0	0	0	**5**
23:45 - 23:59	0	0	0	0	2	1	2	2	0	0	0	0	0	0	0	**7**
Totals	**8**	**64**	**382**	**1097**	**1636**	**586**	**92**	**20**	**2**	**2**	**2**	**0**	**1**	**2**	**0**	**3894**
Percent of Total	**0.2**	**1.6**	**9.8**	**28.2**	**42.0**	**15.0**	**2.4**	**0.5**	**0.1**	**0.1**	**0.1**	**0.0**	**0.0**	**0.1**	**0.0**	**100**
Percent of AM	**0.2**	**2.1**	**12.0**	**29.9**	**41.0**	**12.4**	**1.8**	**0.5**	**0.0**	**0.1**	**0.1**	**0.0**	**0.0**	**0.1**	**0.0**	**100**
Percent of PM	**0.2**	**1.3**	**8.1**	**26.9**	**42.8**	**17.1**	**2.8**	**0.5**	**0.1**	**0.0**	**0.0**	**0.0**	**0.0**	**0.0**	**0.0**	**100**

Daily Eastbound Speeds (MPH)

Study Date: Thursday, 09/20/2018
Unit ID: 0109
Location: SW 4TH ST W OF SW 69TH AV

Standard Deviation:	5.6 MPH	Ten Mile Pace:	15 to 24 MPH	85th Percentile:	26.3 MPH
Mean Speed:	21.5 MPH	Percent in Ten Mile Pace:	70.2%	15th Percentile:	15.7 MPH
Median Speed:	21.5 MPH			90th Percentile:	28.2 MPH
Modal Speed:	23.0 MPH			95th Percentile:	30.2 MPH

Daily Westbound Speeds (MPH)

Study Date: Tuesday, 09/18/2018
Unit ID: 0173
Location: SW 4TH ST W OF SW 69TH AV

	0-5	5-10	10-15	15-20	20-25	25-30	30-35	35-40	40-45	45-50	50-55	55-60	60-65	65-70	70-75	Total
00:00 - 00:14	0	0	0	1	1	0	0	0	0	0	0	0	0	0	0	**2**
00:15 - 00:29	0	0	0	0	3	0	0	0	0	0	0	0	0	0	0	**3**
00:30 - 00:44	0	0	2	0	1	0	0	0	0	0	0	0	0	0	0	**3**
00:45 - 00:59	0	0	0	0	0	0	0	0	0	0	0	0	0	0	0	**0**
01:00 - 01:14	0	0	0	0	0	0	0	0	0	0	0	0	0	0	0	**0**
01:15 - 01:29	0	0	0	0	0	0	0	0	0	0	0	0	0	0	0	**0**
01:30 - 01:44	0	0	0	0	1	0	0	0	0	0	0	0	0	0	0	**1**
01:45 - 01:59	0	0	0	0	0	0	0	0	0	0	0	0	0	0	0	**0**
02:00 - 02:14	0	0	0	0	0	0	0	0	0	0	0	0	0	0	0	**0**
02:15 - 02:29	0	0	0	0	0	0	0	0	0	0	0	0	0	0	0	**0**
02:30 - 02:44	0	0	0	0	1	0	0	0	0	0	0	0	0	0	0	**1**
02:45 - 02:59	0	0	0	0	1	0	0	0	0	0	0	0	0	0	0	**1**
03:00 - 03:14	0	0	1	0	0	0	0	0	0	0	0	0	0	0	0	**1**
03:15 - 03:29	0	0	0	0	1	1	0	0	0	0	0	0	0	0	0	**2**
03:30 - 03:44	0	0	0	0	1	0	0	0	0	0	0	0	0	0	0	**1**
03:45 - 03:59	0	0	0	0	1	0	0	0	0	0	0	0	0	0	0	**1**
04:00 - 04:14	0	0	0	0	1	0	0	0	0	0	0	0	0	0	0	**1**
04:15 - 04:29	0	0	1	1	0	0	0	0	0	0	0	0	0	0	0	**2**
04:30 - 04:44	0	0	1	2	0	0	0	0	0	0	0	0	0	0	0	**3**
04:45 - 04:59	0	0	1	0	1	0	0	0	0	0	0	0	0	0	0	**2**
05:00 - 05:14	0	0	3	4	3	0	0	0	0	0	0	0	0	0	0	**10**
05:15 - 05:29	0	0	0	3	3	0	0	0	0	0	0	0	0	0	0	**6**
05:30 - 05:44	0	0	1	6	2	1	0	0	0	0	0	0	0	0	0	**10**
05:45 - 05:59	0	0	3	5	3	0	0	0	0	0	0	0	0	0	0	**11**
06:00 - 06:14	0	0	1	7	13	1	0	0	0	0	0	0	0	0	0	**22**
06:15 - 06:29	0	0	1	10	14	2	1	0	0	0	0	0	0	0	0	**28**
06:30 - 06:44	0	0	3	11	11	5	0	0	0	0	0	0	0	0	0	**30**
06:45 - 06:59	0	0	2	18	15	6	2	0	0	0	0	0	0	0	0	**43**
07:00 - 07:14	0	1	3	15	16	4	0	0	0	0	0	0	0	0	0	**39**
07:15 - 07:29	0	0	1	17	25	6	0	0	0	0	0	0	0	0	0	**49**
07:30 - 07:44	0	2	0	15	28	11	0	0	0	0	0	0	0	0	0	**56**
07:45 - 07:59	0	3	3	17	22	7	0	1	0	0	0	0	0	0	0	**53**
08:00 - 08:14	0	2	3	14	32	11	0	1	0	0	0	0	0	0	0	**63**
08:15 - 08:29	0	3	8	22	25	6	0	0	0	0	0	0	0	0	0	**64**
08:30 - 08:44	0	1	12	10	23	6	0	0	0	0	0	0	0	0	0	**52**
08:45 - 08:59	0	2	3	15	28	4	0	0	0	0	0	0	0	0	0	**52**
09:00 - 09:14	1	3	5	10	25	1	0	0	0	0	0	0	0	0	0	**45**
09:15 - 09:29	0	2	3	16	14	2	1	0	0	0	0	0	0	0	0	**38**
09:30 - 09:44	0	1	5	9	10	0	0	0	0	0	0	0	0	0	0	**25**
09:45 - 09:59	0	0	3	20	16	3	1	0	0	0	0	0	0	0	0	**43**
10:00 - 10:14	0	0	4	18	16	2	1	0	0	0	0	0	0	0	0	**41**
10:15 - 10:29	0	0	2	6	14	5	0	0	0	0	0	0	0	0	0	**27**
10:30 - 10:44	1	2	2	13	17	3	1	0	0	0	0	0	0	0	0	**39**
10:45 - 10:59	0	0	1	13	19	5	1	0	0	0	0	0	0	0	0	**39**
11:00 - 11:14	0	0	1	20	14	0	0	0	0	0	0	0	0	0	0	**35**
11:15 - 11:29	0	1	3	13	15	4	0	0	0	0	0	0	0	0	0	**36**
11:30 - 11:44	0	1	6	5	14	3	0	0	0	0	0	0	0	0	0	**29**
11:45 - 11:59	0	1	5	11	19	3	0	0	0	0	0	0	0	0	0	**39**
12:00 - 12:14	0	1	2	9	21	9	0	0	0	0	0	0	0	0	0	**42**
12:15 - 12:29	0	0	0	6	19	4	0	0	0	0	0	0	0	0	0	**29**
12:30 - 12:44	0	0	1	12	23	4	1	0	0	0	0	0	0	0	0	**41**

Daily Westbound Speeds (MPH)

Study Date: Tuesday, 09/18/2018
Unit ID: 0173
Location: SW 4TH ST W OF SW 69TH AV

	0-5	5-10	10-15	15-20	20-25	25-30	30-35	35-40	40-45	45-50	50-55	55-60	60-65	65-70	70-75	Total
12:45 - 12:59	0	1	9	17	15	3	0	1	0	0	0	0	0	0	0	**46**
13:00 - 13:14	0	2	4	21	16	2	0	0	0	0	0	0	0	0	0	**45**
13:15 - 13:29	0	1	3	9	16	7	0	0	0	0	0	0	0	0	0	**36**
13:30 - 13:44	0	2	1	23	13	3	0	1	0	1	0	0	0	0	0	**44**
13:45 - 13:59	0	0	1	10	22	5	0	0	0	0	0	0	0	0	0	**38**
14:00 - 14:14	0	0	1	15	35	8	1	0	0	0	0	0	1	0	0	**61**
14:15 - 14:29	0	1	0	10	26	2	0	0	0	0	0	0	0	0	0	**39**
14:30 - 14:44	0	0	1	13	40	5	0	0	0	1	0	0	0	0	0	**60**
14:45 - 14:59	0	0	0	14	24	6	0	0	0	0	0	0	0	0	0	**44**
15:00 - 15:14	0	0	2	11	27	8	0	0	0	0	0	0	0	0	0	**48**
15:15 - 15:29	2	1	2	13	23	13	3	0	0	0	0	0	0	0	0	**57**
15:30 - 15:44	0	0	1	18	41	13	0	0	0	0	0	0	0	0	1	**74**
15:45 - 15:59	0	0	0	17	37	13	0	0	0	0	0	0	0	0	0	**67**
16:00 - 16:14	0	0	1	14	40	7	1	0	0	0	0	0	0	0	0	**63**
16:15 - 16:29	0	2	0	25	45	13	0	0	0	0	0	0	0	0	1	**86**
16:30 - 16:44	0	2	2	23	43	17	1	0	0	0	0	0	0	0	0	**88**
16:45 - 16:59	0	2	2	19	65	12	1	1	0	0	0	2	0	0	0	**104**
17:00 - 17:14	0	0	4	41	63	16	1	0	0	0	0	0	0	0	0	**125**
17:15 - 17:29	0	0	5	47	86	15	3	0	0	0	0	0	0	0	0	**156**
17:30 - 17:44	0	4	12	56	92	8	1	0	0	0	0	1	0	0	0	**174**
17:45 - 17:59	0	1	0	63	82	16	0	0	1	0	0	0	0	0	0	**163**
18:00 - 18:14	0	2	11	39	89	9	0	0	0	0	0	0	0	0	0	**150**
18:15 - 18:29	0	3	2	51	79	13	3	0	0	0	0	0	0	0	0	**151**
18:30 - 18:44	2	0	1	30	56	11	0	0	0	0	0	0	0	0	0	**100**
18:45 - 18:59	1	2	2	25	42	9	1	0	0	0	0	0	1	0	0	**83**
19:00 - 19:14	0	0	2	18	28	9	0	0	0	0	0	0	0	0	0	**57**
19:15 - 19:29	0	0	2	14	14	4	0	0	0	0	0	0	0	0	0	**34**
19:30 - 19:44	0	0	0	8	25	2	1	0	0	0	0	0	0	0	0	**36**
19:45 - 19:59	0	0	5	7	12	2	0	0	0	0	0	0	0	0	0	**26**
20:00 - 20:14	2	1	0	17	9	0	0	0	0	0	0	0	0	0	0	**29**
20:15 - 20:29	0	0	1	8	16	2	0	0	0	0	0	0	0	0	0	**27**
20:30 - 20:44	0	1	2	5	8	0	0	0	0	0	0	0	0	0	0	**16**
20:45 - 20:59	0	0	0	9	9	1	0	0	0	0	0	0	0	0	0	**19**
21:00 - 21:14	0	0	1	2	7	2	1	0	0	0	0	0	0	0	0	**13**
21:15 - 21:29	0	0	1	1	3	0	0	0	0	0	0	0	0	0	0	**5**
21:30 - 21:44	0	0	1	4	6	1	0	0	0	0	0	0	0	0	0	**12**
21:45 - 21:59	0	0	2	1	3	4	0	0	0	0	0	0	0	0	0	**10**
22:00 - 22:14	0	0	0	3	7	0	0	0	0	0	0	0	0	0	0	**10**
22:15 - 22:29	0	0	0	1	5	1	0	1	0	0	0	0	0	0	0	**8**
22:30 - 22:44	0	0	0	2	2	0	0	0	0	0	0	0	0	0	0	**4**
22:45 - 22:59	0	0	0	1	1	1	0	0	0	0	0	0	0	0	0	**3**
23:00 - 23:14	0	0	0	4	1	0	0	0	0	0	0	0	0	0	0	**5**
23:15 - 23:29	0	0	0	3	2	0	0	0	0	0	0	0	0	0	0	**5**
23:30 - 23:44	0	0	0	0	3	0	0	0	0	0	0	0	0	0	0	**3**
23:45 - 23:59	0	0	0	0	1	0	0	0	0	0	0	0	0	0	0	**1**
Totals	**9**	**54**	**180**	**1106**	**1811**	**382**	**27**	**6**	**1**	**2**	**0**	**3**	**2**	**0**	**2**	**3585**
Percent of Total	**0.3**	**1.5**	**5.0**	**30.9**	**50.5**	**10.7**	**0.8**	**0.2**	**0.0**	**0.1**	**0.0**	**0.1**	**0.1**	**0.0**	**0.1**	**100**
Percent of AM	**0.2**	**2.4**	**8.9**	**33.1**	**44.8**	**9.7**	**0.8**	**0.2**	**0.0**	**0.0**	**0.0**	**0.0**	**0.0**	**0.0**	**0.0**	**100**
Percent of PM	**0.3**	**1.1**	**3.4**	**29.9**	**52.9**	**11.0**	**0.7**	**0.2**	**0.0**	**0.1**	**0.0**	**0.1**	**0.1**	**0.0**	**0.1**	**100**

Daily Westbound Speeds (MPH)

Study Date: Tuesday, 09/18/2018
Unit ID: 0173
Location: SW 4TH ST W OF SW 69TH AV

Standard Deviation:	5.0 MPH	Ten Mile Pace:	15 to 24 MPH	85th Percentile:	25.6 MPH
Mean Speed:	21.4 MPH	Percent in Ten Mile Pace:	81.4%	15th Percentile:	16.6 MPH
Median Speed:	21.5 MPH			90th Percentile:	26.0 MPH
Modal Speed:	23.0 MPH			95th Percentile:	28.9 MPH

Daily Westbound Speeds (MPH)

Study Date: Wednesday, 09/19/2018
Unit ID: 0173
Location: SW 4TH ST W OF SW 69TH AV

	0-5	5-10	10-15	15-20	20-25	25-30	30-35	35-40	40-45	45-50	50-55	55-60	60-65	65-70	70-75	Total
00:00 - 00:14	0	0	0	0	1	0	0	0	0	0	0	0	0	0	0	**1**
00:15 - 00:29	0	0	0	1	3	0	0	0	0	0	0	0	0	0	0	**4**
00:30 - 00:44	0	0	1	1	1	1	0	0	0	0	0	0	0	0	0	**4**
00:45 - 00:59	0	0	0	1	0	0	0	0	0	0	0	0	0	0	0	**1**
01:00 - 01:14	0	0	0	0	1	0	0	0	0	0	0	0	0	0	0	**1**
01:15 - 01:29	0	0	0	0	1	0	0	0	0	0	0	0	0	0	0	**1**
01:30 - 01:44	0	0	0	1	0	0	0	0	0	0	0	0	0	0	0	**1**
01:45 - 01:59	0	0	1	0	0	0	0	0	0	0	0	0	0	0	0	**1**
02:00 - 02:14	0	0	0	0	0	0	0	0	0	0	0	0	0	0	0	**0**
02:15 - 02:29	0	0	0	0	1	0	0	0	0	0	0	0	0	0	0	**1**
02:30 - 02:44	0	0	0	1	0	0	0	0	0	0	0	0	0	0	0	**1**
02:45 - 02:59	0	0	0	2	0	0	0	0	0	0	0	0	0	0	0	**2**
03:00 - 03:14	0	0	0	0	0	0	0	0	0	0	0	0	0	0	0	**0**
03:15 - 03:29	0	0	0	0	0	0	0	0	0	0	0	0	0	0	0	**0**
03:30 - 03:44	0	0	0	0	0	1	0	0	0	0	0	0	0	0	0	**1**
03:45 - 03:59	0	0	0	1	0	0	0	0	0	0	0	0	0	0	0	**1**
04:00 - 04:14	0	0	0	0	1	0	0	0	0	0	0	0	0	0	0	**1**
04:15 - 04:29	0	0	0	1	0	0	0	0	0	0	0	0	0	0	0	**1**
04:30 - 04:44	0	0	0	2	2	0	0	0	0	0	0	0	0	0	0	**4**
04:45 - 04:59	0	0	0	1	0	0	0	0	0	0	0	0	0	0	0	**1**
05:00 - 05:14	0	0	1	0	0	0	0	0	0	0	0	0	0	0	0	**1**
05:15 - 05:29	0	0	1	1	0	0	0	0	0	0	0	0	0	0	0	**2**
05:30 - 05:44	0	0	0	2	4	1	0	0	0	0	0	0	0	0	0	**7**
05:45 - 05:59	0	0	3	5	2	0	0	0	0	0	0	0	0	0	0	**10**
06:00 - 06:14	0	0	2	8	7	0	0	0	0	0	0	0	0	0	0	**17**
06:15 - 06:29	0	0	1	8	12	2	0	0	0	0	0	0	0	0	0	**23**
06:30 - 06:44	0	0	0	7	11	3	0	0	0	0	0	0	0	0	0	**21**
06:45 - 06:59	0	0	2	11	12	4	0	0	1	0	0	0	0	0	0	**30**
07:00 - 07:14	0	0	1	11	21	2	0	0	0	0	0	0	0	0	0	**35**
07:15 - 07:29	0	2	3	8	29	8	1	0	0	0	0	0	0	0	0	**51**
07:30 - 07:44	0	2	2	16	25	3	0	0	0	0	0	0	0	0	0	**48**
07:45 - 07:59	0	0	0	10	28	6	2	0	0	0	0	0	0	0	0	**46**
08:00 - 08:14	0	1	2	12	27	8	1	0	0	0	0	0	0	0	0	**51**
08:15 - 08:29	0	1	0	13	26	6	0	0	0	0	0	0	0	0	0	**46**
08:30 - 08:44	0	0	1	13	28	2	1	0	0	1	0	0	0	0	0	**46**
08:45 - 08:59	0	0	1	14	24	4	0	0	0	0	0	0	0	0	0	**43**
09:00 - 09:14	0	0	2	12	20	5	0	1	0	0	0	0	0	0	0	**40**
09:15 - 09:29	0	0	1	7	21	3	0	0	0	0	0	0	0	0	0	**32**
09:30 - 09:44	0	1	1	23	20	2	1	0	0	0	0	0	0	0	0	**48**
09:45 - 09:59	0	1	8	15	22	1	0	0	0	0	0	0	0	0	0	**47**
10:00 - 10:14	0	0	2	16	13	4	0	0	0	0	0	0	0	0	0	**35**
10:15 - 10:29	6	0	1	11	22	4	0	0	0	0	0	0	0	0	0	**44**
10:30 - 10:44	0	1	2	13	18	0	0	0	0	0	0	0	0	0	0	**34**
10:45 - 10:59	0	1	0	11	16	6	1	0	0	0	0	0	0	0	0	**35**
11:00 - 11:14	0	0	5	16	17	3	0	0	0	0	0	0	0	0	0	**41**
11:15 - 11:29	1	0	3	13	19	2	1	0	0	0	1	0	0	0	0	**40**
11:30 - 11:44	0	2	4	14	21	7	0	0	0	0	0	0	0	0	0	**48**
11:45 - 11:59	0	0	0	20	21	7	0	1	0	0	0	0	0	0	0	**49**
12:00 - 12:14	0	0	1	6	26	3	1	0	0	0	0	0	0	0	0	**37**
12:15 - 12:29	0	1	2	6	25	8	0	0	0	0	0	0	0	0	0	**42**
12:30 - 12:44	0	0	2	14	16	6	0	0	0	0	0	0	0	0	0	**38**

Daily Westbound Speeds (MPH)

Study Date: Wednesday, 09/19/2018
Unit ID: 0173
Location: SW 4TH ST W OF SW 69TH AV

	0-5	5-10	10-15	15-20	20-25	25-30	30-35	35-40	40-45	45-50	50-55	55-60	60-65	65-70	70-75	Total
12:45 - 12:59	0	0	0	12	31	4	0	0	0	0	0	0	0	0	0	**47**
13:00 - 13:14	0	0	1	11	20	4	1	0	0	0	0	0	0	0	0	**37**
13:15 - 13:29	0	1	1	10	21	3	2	0	0	0	0	0	0	0	0	**38**
13:30 - 13:44	0	0	2	12	26	3	0	0	0	0	0	0	0	0	0	**43**
13:45 - 13:59	0	1	0	11	19	4	0	0	0	0	0	0	0	0	0	**35**
14:00 - 14:14	1	1	4	13	20	6	0	1	0	0	0	0	0	0	0	**46**
14:15 - 14:29	0	0	1	14	29	3	1	0	0	0	0	0	0	0	0	**48**
14:30 - 14:44	0	0	4	15	27	2	0	0	0	0	0	0	0	0	0	**48**
14:45 - 14:59	0	1	1	13	22	10	1	0	1	0	0	0	0	0	0	**49**
15:00 - 15:14	0	0	1	11	24	4	1	0	0	0	0	0	0	0	0	**41**
15:15 - 15:29	0	0	0	10	28	5	1	0	0	0	1	0	0	0	0	**45**
15:30 - 15:44	0	0	2	13	38	4	0	0	0	0	0	0	0	0	0	**57**
15:45 - 15:59	0	0	0	12	45	6	0	0	0	0	1	0	0	0	0	**64**
16:00 - 16:14	0	1	1	22	53	13	0	0	0	0	0	0	0	0	0	**90**
16:15 - 16:29	1	0	2	24	40	9	1	0	0	0	0	0	0	0	0	**77**
16:30 - 16:44	0	0	3	14	44	14	0	1	0	0	0	0	0	0	0	**76**
16:45 - 16:59	0	1	2	25	51	16	1	0	2	0	0	0	0	0	0	**98**
17:00 - 17:14	0	1	0	32	60	18	1	0	0	0	0	0	1	0	0	**113**
17:15 - 17:29	0	0	3	33	95	19	1	0	1	0	0	0	0	0	0	**152**
17:30 - 17:44	0	2	8	49	91	13	0	0	1	0	0	0	0	0	0	**164**
17:45 - 17:59	0	3	6	47	78	13	0	2	0	0	0	0	0	0	0	**149**
18:00 - 18:14	0	0	8	46	62	15	0	0	0	0	0	0	0	0	0	**131**
18:15 - 18:29	0	0	0	57	89	14	0	0	0	1	0	0	0	0	0	**161**
18:30 - 18:44	0	0	5	32	85	9	0	0	0	0	0	0	0	0	0	**131**
18:45 - 18:59	1	0	2	30	54	11	0	0	0	0	0	0	0	0	0	**98**
19:00 - 19:14	0	1	0	10	30	3	0	0	0	0	0	0	0	0	0	**44**
19:15 - 19:29	0	0	2	17	32	10	0	0	0	0	0	0	0	0	0	**61**
19:30 - 19:44	0	0	1	18	17	4	1	0	0	0	0	0	0	0	0	**41**
19:45 - 19:59	0	0	0	14	23	4	0	0	0	0	0	0	0	0	0	**41**
20:00 - 20:14	0	1	2	7	12	3	0	0	0	0	0	0	0	0	0	**25**
20:15 - 20:29	0	0	2	6	15	2	1	0	0	0	0	0	0	0	0	**26**
20:30 - 20:44	0	0	4	9	7	2	0	0	0	0	0	0	0	0	0	**22**
20:45 - 20:59	0	0	0	7	8	3	0	0	0	0	0	0	0	0	0	**18**
21:00 - 21:14	0	1	0	5	3	2	0	0	0	0	0	0	0	0	0	**11**
21:15 - 21:29	0	0	1	3	6	1	0	0	0	0	0	0	0	0	0	**11**
21:30 - 21:44	0	0	0	5	8	0	0	0	0	0	0	0	0	0	0	**13**
21:45 - 21:59	0	0	0	3	6	2	1	0	0	0	0	0	0	0	0	**12**
22:00 - 22:14	0	0	0	2	6	1	0	0	0	0	0	0	0	0	0	**9**
22:15 - 22:29	0	0	0	6	7	0	0	0	0	0	0	0	0	0	0	**13**
22:30 - 22:44	0	0	0	4	0	0	1	0	0	0	0	0	0	0	0	**5**
22:45 - 22:59	0	0	0	4	2	0	0	0	0	0	0	0	0	0	0	**6**
23:00 - 23:14	0	0	1	3	2	0	0	0	0	0	0	0	0	0	0	**6**
23:15 - 23:29	0	0	0	2	2	2	0	0	0	0	0	0	0	0	0	**6**
23:30 - 23:44	0	0	1	0	2	0	0	0	0	0	0	0	0	0	0	**3**
23:45 - 23:59	0	0	0	0	3	0	0	0	0	0	0	0	0	0	0	**3**
Totals	**10**	**28**	**127**	**1041**	**1907**	**373**	**24**	**6**	**6**	**2**	**3**	**0**	**1**	**0**	**0**	**3528**
Percent of Total	**0.3**	**0.8**	**3.6**	**29.5**	**54.1**	**10.6**	**0.7**	**0.2**	**0.2**	**0.1**	**0.1**	**0.0**	**0.0**	**0.0**	**0.0**	**100**
Percent of AM	**0.7**	**1.2**	**5.1**	**32.3**	**49.8**	**9.5**	**0.8**	**0.2**	**0.1**	**0.1**	**0.1**	**0.0**	**0.0**	**0.0**	**0.0**	**100**
Percent of PM	**0.1**	**0.6**	**3.0**	**28.4**	**55.7**	**11.0**	**0.6**	**0.2**	**0.2**	**0.0**	**0.1**	**0.0**	**0.0**	**0.0**	**0.0**	**100**

Daily Westbound Speeds (MPH)

Study Date: Wednesday, 09/19/2018
Unit ID: 0173
Location: SW 4TH ST W OF SW 69TH AV

Standard Deviation:	4.6 MPH	Ten Mile Pace:	15 to 24 MPH	85th Percentile:	25.6 MPH
Mean Speed:	21.7 MPH	Percent in Ten Mile Pace:	83.6%	15th Percentile:	17.1 MPH
Median Speed:	21.8 MPH			90th Percentile:	26.0 MPH
Modal Speed:	23.0 MPH			95th Percentile:	28.8 MPH

Daily Westbound Speeds (MPH)

Study Date: Thursday, 09/20/2018
Unit ID: 0173
Location: SW 4TH ST W OF SW 69TH AV

	0-5	5-10	10-15	15-20	20-25	25-30	30-35	35-40	40-45	45-50	50-55	55-60	60-65	65-70	70-75	Total
00:00 - 00:14	0	0	0	2	3	0	0	0	0	0	0	0	0	0	0	**5**
00:15 - 00:29	0	0	0	0	2	1	0	0	0	0	0	0	0	0	0	**3**
00:30 - 00:44	0	0	0	0	4	0	0	0	0	0	0	0	0	0	0	**4**
00:45 - 00:59	0	0	0	2	0	0	0	0	0	0	0	0	0	0	0	**2**
01:00 - 01:14	0	0	0	1	0	0	0	0	0	0	0	0	0	0	0	**1**
01:15 - 01:29	0	0	0	0	1	0	0	0	0	0	0	0	0	0	0	**1**
01:30 - 01:44	0	0	0	1	0	0	0	0	0	0	0	0	0	0	0	**1**
01:45 - 01:59	0	0	0	0	0	2	0	0	0	0	0	0	0	0	0	**2**
02:00 - 02:14	0	0	0	0	1	0	0	0	0	0	0	0	0	0	0	**1**
02:15 - 02:29	0	0	0	0	1	0	0	0	0	0	0	0	0	0	0	**1**
02:30 - 02:44	0	0	0	0	0	0	0	0	0	0	0	0	0	0	0	**0**
02:45 - 02:59	0	0	1	1	1	0	0	0	0	0	0	0	0	0	0	**3**
03:00 - 03:14	0	0	0	0	1	0	0	0	0	0	0	0	0	0	0	**1**
03:15 - 03:29	0	0	0	0	0	0	0	0	0	0	0	0	0	0	0	**0**
03:30 - 03:44	0	0	0	0	0	0	0	0	0	0	0	0	0	0	0	**0**
03:45 - 03:59	0	0	0	0	1	0	0	0	0	0	0	0	0	0	0	**1**
04:00 - 04:14	0	0	0	2	0	0	0	0	0	0	0	0	0	0	0	**2**
04:15 - 04:29	0	0	0	1	1	0	0	0	0	0	0	0	0	0	0	**2**
04:30 - 04:44	0	0	1	1	1	0	1	0	0	0	0	0	0	0	0	**4**
04:45 - 04:59	0	0	1	0	3	1	0	0	0	0	0	0	0	0	0	**5**
05:00 - 05:14	0	0	0	5	4	1	0	0	0	0	0	0	0	0	0	**10**
05:15 - 05:29	0	0	0	3	3	0	0	0	0	0	0	0	0	0	0	**6**
05:30 - 05:44	0	0	0	6	3	1	0	0	0	0	0	0	0	0	0	**10**
05:45 - 05:59	0	0	1	4	3	0	0	0	0	0	0	0	0	0	0	**8**
06:00 - 06:14	0	0	1	6	8	0	1	0	0	0	0	0	0	0	0	**16**
06:15 - 06:29	0	0	3	10	18	3	0	0	0	0	0	0	0	0	0	**34**
06:30 - 06:44	0	0	3	13	14	2	0	0	0	0	0	0	0	0	0	**32**
06:45 - 06:59	0	0	2	11	17	4	0	1	0	0	0	0	0	0	0	**35**
07:00 - 07:14	1	2	2	15	20	2	0	0	0	0	0	0	0	0	0	**42**
07:15 - 07:29	0	0	1	15	33	4	0	0	0	0	0	0	0	0	0	**53**
07:30 - 07:44	0	2	3	22	27	12	1	0	0	1	0	0	0	0	0	**68**
07:45 - 07:59	1	0	2	25	33	9	0	1	1	0	0	0	0	0	0	**72**
08:00 - 08:14	2	0	2	11	41	5	0	0	0	0	0	0	0	0	0	**61**
08:15 - 08:29	0	0	1	10	35	8	0	0	0	0	0	0	0	0	0	**54**
08:30 - 08:44	0	0	3	17	33	4	1	0	0	0	0	0	1	0	0	**59**
08:45 - 08:59	1	1	4	10	24	7	0	0	1	0	0	0	0	0	0	**48**
09:00 - 09:14	0	0	5	11	15	5	2	0	0	0	0	0	0	0	0	**38**
09:15 - 09:29	0	1	1	13	22	5	0	0	0	0	0	0	0	0	0	**42**
09:30 - 09:44	3	0	1	18	15	3	0	0	0	0	0	0	0	0	0	**40**
09:45 - 09:59	0	0	2	6	27	0	0	0	0	0	0	0	0	0	0	**35**
10:00 - 10:14	0	0	0	9	17	7	1	0	0	0	0	0	0	0	0	**34**
10:15 - 10:29	0	0	0	11	20	3	0	1	0	0	0	0	0	0	0	**35**
10:30 - 10:44	0	1	3	9	16	4	0	0	0	0	1	0	0	0	0	**34**
10:45 - 10:59	0	1	3	15	14	2	0	0	0	0	0	0	0	0	0	**35**
11:00 - 11:14	0	0	2	12	20	6	0	0	0	0	0	0	0	0	0	**40**
11:15 - 11:29	0	0	4	15	15	1	1	1	0	0	0	0	0	0	0	**37**
11:30 - 11:44	0	0	3	21	27	4	0	0	0	0	0	0	0	0	0	**55**
11:45 - 11:59	0	0	2	14	24	4	0	0	0	0	0	0	0	0	0	**44**
12:00 - 12:14	0	0	0	9	19	3	1	0	0	0	0	0	0	0	0	**32**
12:15 - 12:29	0	0	6	10	9	6	0	0	0	0	1	0	0	0	0	**32**
12:30 - 12:44	0	0	1	17	21	5	0	0	0	0	0	0	0	0	0	**44**

Daily Westbound Speeds (MPH)

Study Date: Thursday, 09/20/2018
Unit ID: 0173
Location: SW 4TH ST W OF SW 69TH AV

	0-5	5-10	10-15	15-20	20-25	25-30	30-35	35-40	40-45	45-50	50-55	55-60	60-65	65-70	70-75	Total
12:45 - 12:59	0	0	0	22	15	4	1	1	0	0	0	0	0	0	0	**43**
13:00 - 13:14	0	2	3	19	11	5	1	0	0	0	0	0	0	0	0	**41**
13:15 - 13:29	0	1	1	6	22	3	2	0	0	0	0	0	0	0	0	**35**
13:30 - 13:44	0	0	5	18	26	2	2	0	0	0	0	0	0	0	0	**53**
13:45 - 13:59	0	1	0	10	26	3	0	0	1	0	0	0	0	0	0	**41**
14:00 - 14:14	0	1	1	11	35	8	0	0	0	0	0	0	0	0	0	**56**
14:15 - 14:29	1	0	2	19	27	10	0	0	0	0	0	0	0	0	0	**59**
14:30 - 14:44	0	0	0	12	30	9	0	0	0	0	0	0	0	0	0	**51**
14:45 - 14:59	0	0	3	6	37	6	0	0	0	0	0	0	0	0	0	**52**
15:00 - 15:14	0	0	2	21	33	11	2	0	0	0	0	0	0	0	0	**69**
15:15 - 15:29	0	1	5	23	37	1	1	0	0	0	0	0	0	0	0	**68**
15:30 - 15:44	0	0	2	14	35	6	5	0	0	0	0	0	0	0	0	**62**
15:45 - 15:59	0	0	3	21	36	7	0	0	0	0	0	0	0	0	0	**67**
16:00 - 16:14	0	1	6	21	60	9	1	0	0	0	0	1	0	0	0	**99**
16:15 - 16:29	0	5	8	34	28	3	2	0	0	0	0	0	0	0	0	**80**
16:30 - 16:44	0	0	7	42	44	11	1	1	0	0	0	0	0	0	0	**106**
16:45 - 16:59	0	0	2	36	62	8	0	0	0	0	1	0	0	0	0	**109**
17:00 - 17:14	0	1	3	50	56	5	0	0	0	1	0	0	0	0	0	**116**
17:15 - 17:29	0	4	10	53	59	13	0	0	0	0	1	0	0	0	0	**140**
17:30 - 17:44	0	1	15	51	90	6	1	0	0	0	0	0	0	0	0	**164**
17:45 - 17:59	0	0	10	67	83	5	2	0	0	1	1	0	0	0	0	**169**
18:00 - 18:14	0	2	13	44	90	6	1	0	0	0	0	0	0	0	0	**156**
18:15 - 18:29	0	0	7	39	54	5	0	0	1	0	0	0	0	0	0	**106**
18:30 - 18:44	0	1	3	31	44	2	0	0	1	0	0	0	0	0	1	**83**
18:45 - 18:59	0	1	10	27	26	4	1	0	0	0	0	0	0	0	0	**69**
19:00 - 19:14	0	0	1	17	20	3	0	0	0	0	0	0	0	0	0	**41**
19:15 - 19:29	0	0	3	20	27	3	0	0	0	0	0	0	0	0	0	**53**
19:30 - 19:44	0	0	1	15	14	2	0	0	0	0	0	0	0	0	0	**32**
19:45 - 19:59	0	0	2	4	23	1	0	0	0	0	0	0	0	0	0	**30**
20:00 - 20:14	0	0	1	12	17	0	0	0	1	0	0	0	0	0	0	**31**
20:15 - 20:29	0	1	3	10	15	1	0	0	0	1	0	0	0	0	0	**31**
20:30 - 20:44	0	0	2	2	7	0	1	0	0	0	0	0	0	0	0	**12**
20:45 - 20:59	0	0	1	5	14	0	0	0	0	0	0	0	0	0	0	**20**
21:00 - 21:14	0	0	1	8	6	1	0	0	0	0	0	0	0	0	0	**16**
21:15 - 21:29	0	0	1	10	5	2	0	0	0	0	0	0	0	0	0	**18**
21:30 - 21:44	0	0	1	2	13	0	0	0	0	0	0	0	0	0	0	**16**
21:45 - 21:59	0	0	0	4	3	1	0	0	0	0	0	0	0	0	0	**8**
22:00 - 22:14	0	0	0	8	3	0	0	0	0	0	0	0	0	0	0	**11**
22:15 - 22:29	0	0	0	3	3	1	0	0	0	0	0	0	0	0	0	**7**
22:30 - 22:44	0	0	1	7	4	1	0	0	0	0	0	0	0	0	0	**13**
22:45 - 22:59	0	0	0	3	0	0	0	0	0	0	0	0	0	0	0	**3**
23:00 - 23:14	0	0	0	2	8	0	0	0	0	0	0	0	0	0	0	**10**
23:15 - 23:29	0	0	1	3	0	1	0	0	0	0	0	0	0	0	0	**5**
23:30 - 23:44	0	0	0	1	5	1	0	0	0	0	0	0	0	0	0	**7**
23:45 - 23:59	0	0	0	3	4	0	0	0	0	0	0	0	0	0	0	**7**
Totals	**9**	**31**	**204**	**1220**	**1874**	**294**	**33**	**6**	**6**	**4**	**5**	**1**	**1**	**0**	**1**	**3689**
Percent of Total	**0.2**	**0.8**	**5.5**	**33.1**	**50.8**	**8.0**	**0.9**	**0.2**	**0.2**	**0.1**	**0.1**	**0.0**	**0.0**	**0.0**	**0.0**	**100**
Percent of AM	**0.7**	**0.7**	**5.1**	**31.2**	**50.9**	**9.9**	**0.7**	**0.4**	**0.2**	**0.1**	**0.1**	**0.0**	**0.1**	**0.0**	**0.0**	**100**
Percent of PM	**0.0**	**0.9**	**5.7**	**33.9**	**50.8**	**7.2**	**1.0**	**0.1**	**0.2**	**0.1**	**0.2**	**0.0**	**0.0**	**0.0**	**0.0**	**100**

Daily Westbound Speeds (MPH)

Study Date: Thursday, 09/20/2018
Unit ID: 0173
Location: SW 4TH ST W OF SW 69TH AV

Standard Deviation:	4.9 MPH	Ten Mile Pace:	15 to 24 MPH	85th Percentile:	25.4 MPH
Mean Speed:	21.3 MPH	Percent in Ten Mile Pace:	83.9%	15th Percentile:	16.5 MPH
Median Speed:	21.2 MPH			90th Percentile:	25.9 MPH
Modal Speed:	23.0 MPH			95th Percentile:	28.4 MPH

Appendix B – Historical Growth Analysis

SR 968/FLAGLER ST, 200' E SW/NW 72 AV --

FIN#	0
Location	1

County:	Miami (87)
Station #:	871139
Highway:	SR 968/FLAGLER ST, 200' E SW/NW 72 AV

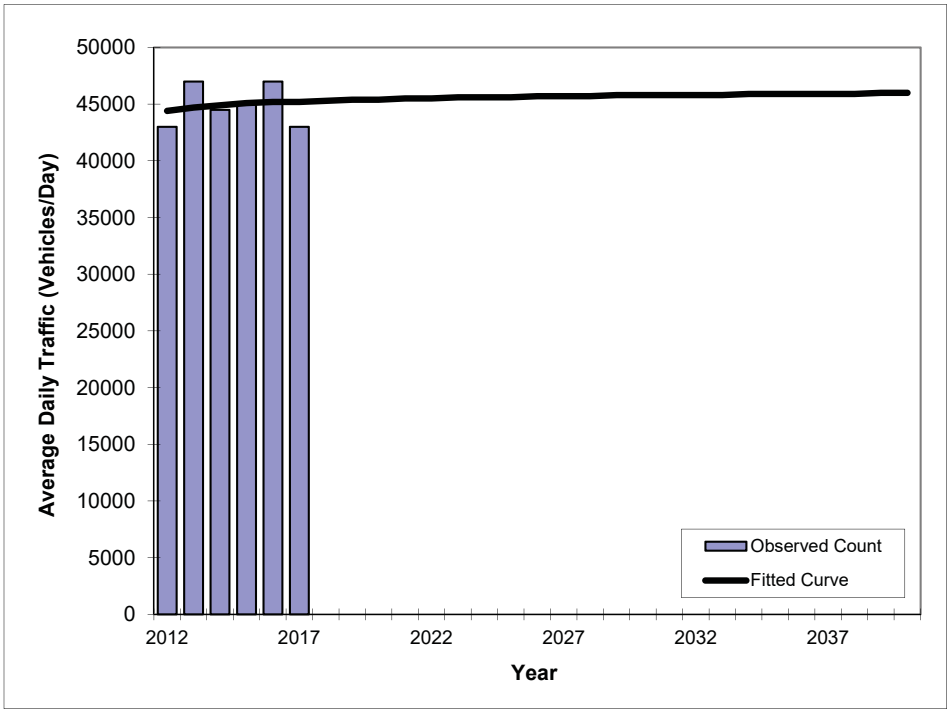

Year	Traffic (ADT/AADT) Count*	Trend**
2012	43000	44400
2013	47000	44700
2014	44500	44900
2015	45000	45100
2016	47000	45200
2017	43000	45200
2020 Opening Year Trend		
2020	N/A	45400
2030 Mid-Year Trend		
2030	N/A	45800
2040 Design Year Trend		
2040	N/A	46000
TRANPLAN Forecasts/Trends		

*Axle-Adjusted

Trend R-squared:	2.93%
Compounded Annual Historic Growth Rate:	0.36%
Compounded Growth Rate (2017 to Design Year):	0.08%
Printed:	2-Oct-18

Decaying Exponential Growth Option

SW 72ND AVE, 200' SOUTH OF SW 40TH STREET --

FIN#	0
Location	1

County:	Miami (87)
Station #:	878138
Highway:	72ND AVE, 200' SOUTH OF SW 40TH STR

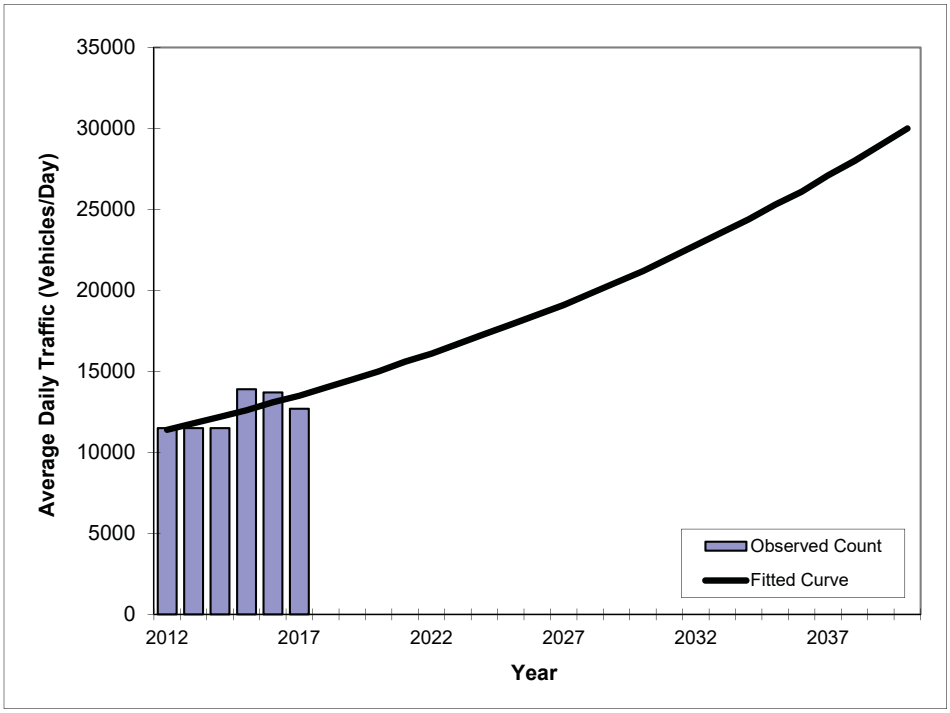

Year	Traffic (ADT/AADT) Count*	Trend**
2012	11500	11400
2013	11500	11800
2014	11500	12200
2015	13900	12600
2016	13700	13100
2017	12700	13500
2020 Opening Year Trend		
2020	N/A	15000
2030 Mid-Year Trend		
2030	N/A	21200
2040 Design Year Trend		
2040	N/A	30000
TRANPLAN Forecasts/Trends		

*Axle-Adjusted

Trend R-squared:	51.65%
Compounded Annual Historic Growth Rate:	3.44%
Compounded Growth Rate (2017 to Design Year):	3.53%
Printed:	2-Oct-18

Exponential Growth Option

SW 72ND AVE, 200' SOUTH OF SW 72ND STREET --

FIN#	0
Location	1

County:	Miami (87)
Station #:	878186
Highway:	72ND AVE, 200' SOUTH OF SW 72ND STR

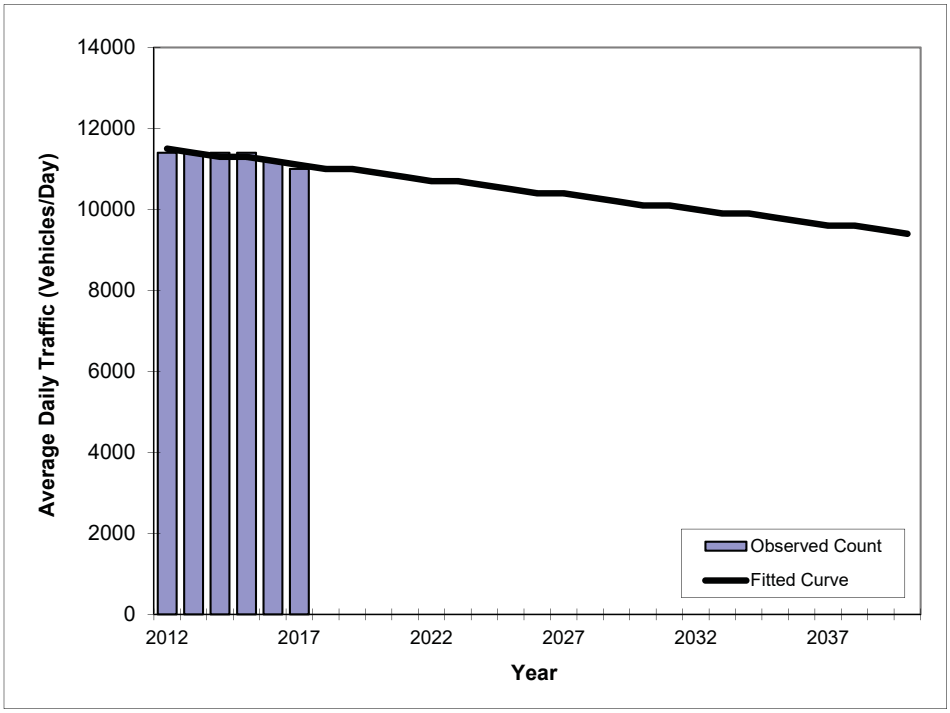

Year	Traffic (ADT/AADT) Count*	Trend**
2012	11400	11500
2013	11400	11400
2014	11400	11300
2015	11400	11300
2016	11200	11200
2017	11000	11100
2020 Opening Year Trend		
2020	N/A	10900
2030 Mid-Year Trend		
2030	N/A	10100
2040 Design Year Trend		
2040	N/A	9400
TRANPLAN Forecasts/Trends		

*Axle-Adjusted

** Annual Trend Increase:	-74
Trend R-squared:	68.98%
Trend Annual Historic Growth Rate:	-0.70%
Trend Growth Rate (2017 to Design Year):	-0.67%
Printed:	2-Oct-18

Straight Line Growth Option

SW 72ND AVE, 200' SOUTH OF SW 56TH STREET --

FIN#	0
Location	1

County:	Miami (87)
Station #:	878187
Highway:	72ND AVE, 200' SOUTH OF SW 56TH STR

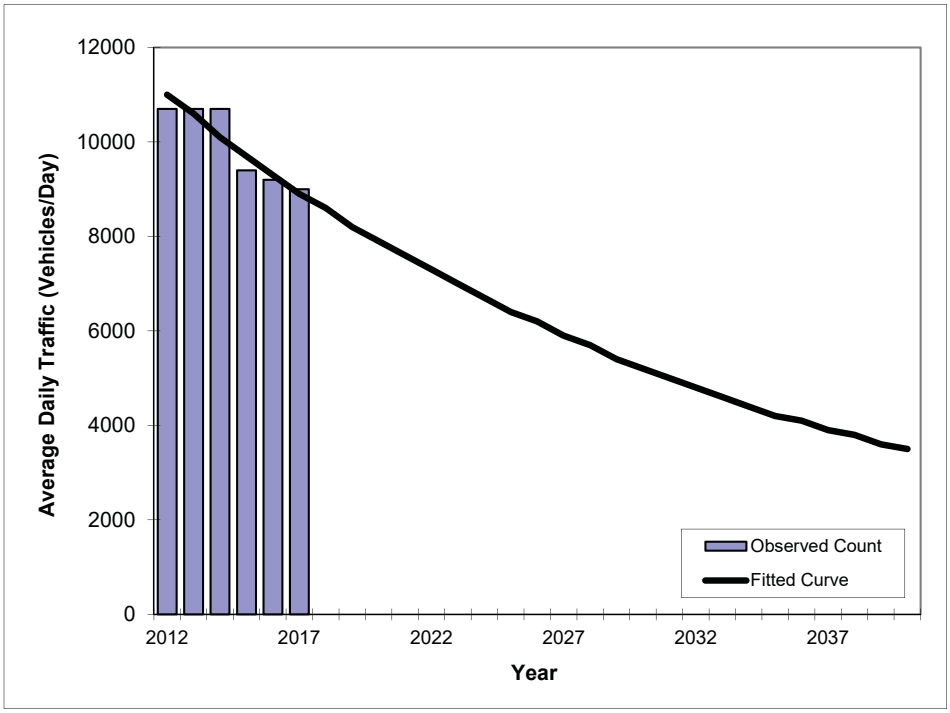

Year	Traffic (ADT/AADT) Count*	Trend**
2012	10700	11000
2013	10700	10600
2014	10700	10100
2015	9400	9700
2016	9200	9300
2017	9000	8900
2020 Opening Year Trend		
2020	N/A	7900
2030 Mid-Year Trend		
2030	N/A	5200
2040 Design Year Trend		
2040	N/A	3500
TRANPLAN Forecasts/Trends		

*Axle-Adjusted

Trend R-squared:	84.98%
Compounded Annual Historic Growth Rate:	-4.15%
Compounded Growth Rate (2017 to Design Year):	-3.98%
Printed:	2-Oct-18

Exponential Growth Option

SW 56TH ST, 200' WEST OF SW 69TH AVENUE --

FIN#	0
Location	1

County:	Miami (87)
Station #:	878279
Highway:	V 56TH ST, 200' WEST OF SW 69TH AVENU

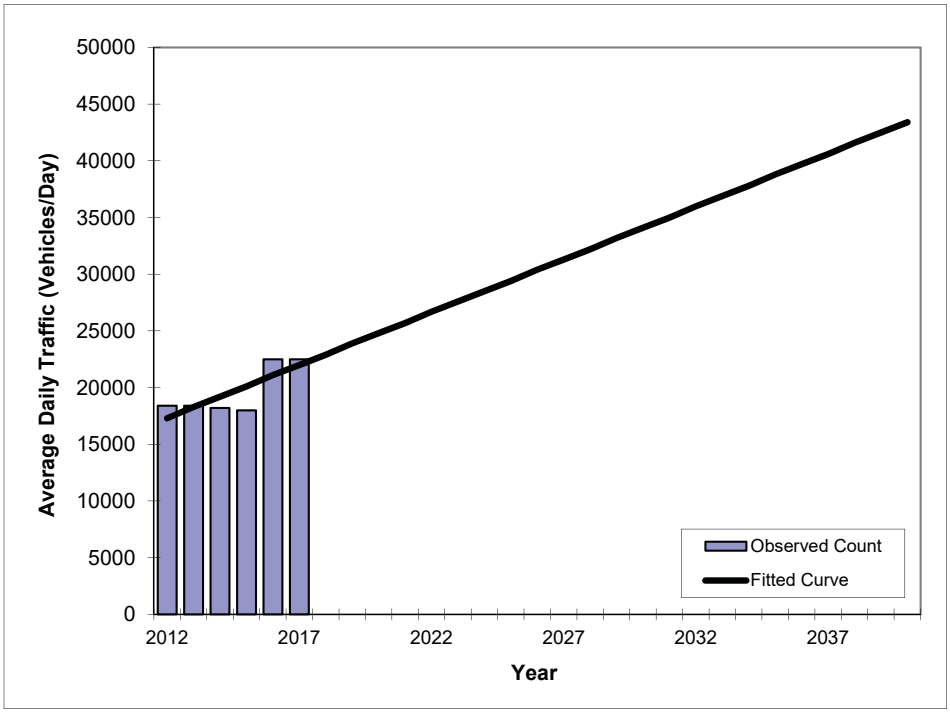

Year	Traffic (ADT/AADT) Count*	Trend**
2012	18400	17300
2013	18400	18300
2014	18200	19200
2015	18000	20100
2016	22500	21100
2017	22500	22000
2020 Opening Year Trend		
2020	N/A	24800
2030 Mid-Year Trend		
2030	N/A	34100
2040 Design Year Trend		
2040	N/A	43400
TRANPLAN Forecasts/Trends		

*Axle-Adjusted

** Annual Trend Increase:	931
Trend R-squared:	62.75%
Trend Annual Historic Growth Rate:	5.43%
Trend Growth Rate (2017 to Design Year):	4.23%
Printed:	2-Oct-18

Straight Line Growth Option

SW 67TH AVE, 200' SOUTH OF SW 40TH STREET --

FIN#	0
Location	1

County:	Miami (87)
Station #:	878304
Highway:	67TH AVE, 200' SOUTH OF SW 40TH STR

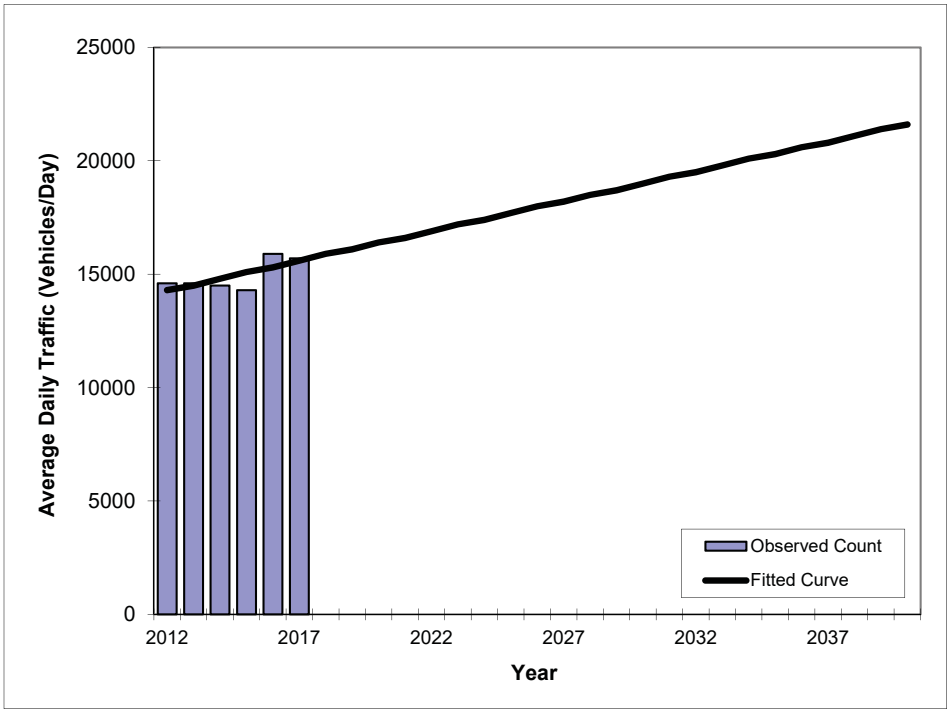

Year	Traffic (ADT/AADT) Count*	Trend**
2012	14600	14300
2013	14600	14500
2014	14500	14800
2015	14300	15100
2016	15900	15300
2017	15700	15600
2020 Opening Year Trend		
2020	N/A	16400
2030 Mid-Year Trend		
2030	N/A	19000
2040 Design Year Trend		
2040	N/A	21600
TRANPLAN Forecasts/Trends		

*Axle-Adjusted

** Annual Trend Increase:	263
Trend R-squared:	51.82%
Trend Annual Historic Growth Rate:	1.82%
Trend Growth Rate (2017 to Design Year):	1.67%
Printed:	2-Oct-18

Straight Line Growth Option

SW 67TH AVE, 200' SOUTH OF NW 24TH STREET --

FIN#	0
Location	1

County:	Miami (87)
Station #:	878305
Highway:	67TH AVE, 200' SOUTH OF NW 24TH STR

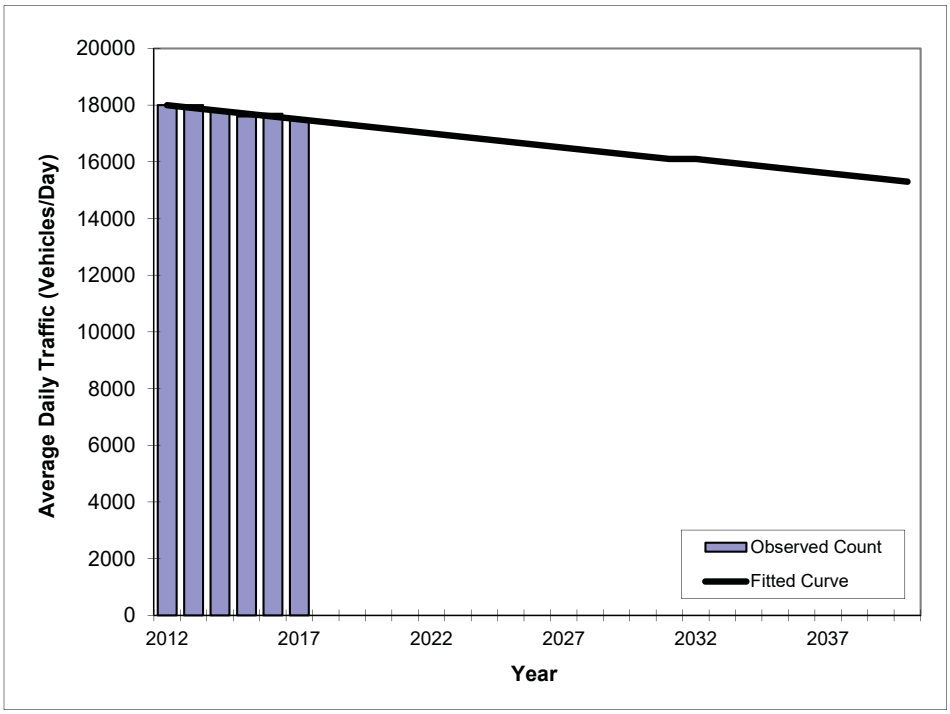

Year	Traffic (ADT/AADT) Count*	Trend**
2012	18000	18000
2013	18000	17900
2014	17800	17800
2015	17600	17700
2016	17700	17600
2017	17500	17500
2020 Opening Year Trend		
2020	N/A	17200
2030 Mid-Year Trend		
2030	N/A	16200
2040 Design Year Trend		
2040	N/A	15300
TRANPLAN Forecasts/Trends		

Trend R-squared:	86.77%
Compounded Annual Historic Growth Rate:	-0.56%
Compounded Growth Rate (2017 to Design Year):	-0.58%
Printed:	2-Oct-18

Exponential Growth Option

***Axle-Adjusted**

SW 67TH AVE, 200' SOUTH OF NW 8TH STREET --

FIN#	0
Location	1

County:	Miami (87)
Station #:	878306
Highway:	67TH AVE, 200' SOUTH OF NW 8TH STRE

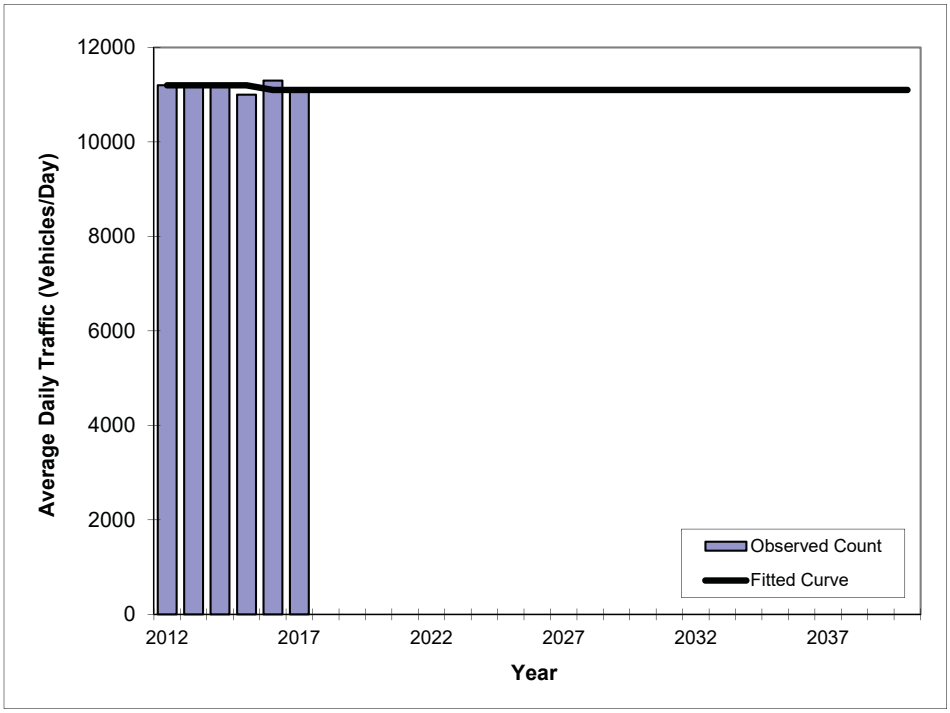

Year	Traffic (ADT/AADT) Count*	Trend**
2012	11200	11200
2013	11200	11200
2014	11200	11200
2015	11000	11200
2016	11300	11100
2017	11100	11100
2020 Opening Year Trend		
2020	N/A	11100
2030 Mid-Year Trend		
2030	N/A	11100
2040 Design Year Trend		
2040	N/A	11100
TRANPLAN Forecasts/Trends		

*Axle-Adjusted

Trend R-squared:	4.96%
Compounded Annual Historic Growth Rate:	-0.18%
Compounded Growth Rate (2017 to Design Year):	0.00%
Printed:	2-Oct-18

Decaying Exponential Growth Option

SW 67TH AVE, 200' SOUTH OF FLAGLER STREET --

FIN#	0
Location	1

County:	Miami (87)
Station #:	878307
Highway:	67TH AVE, 200' SOUTH OF FLAGLER STR

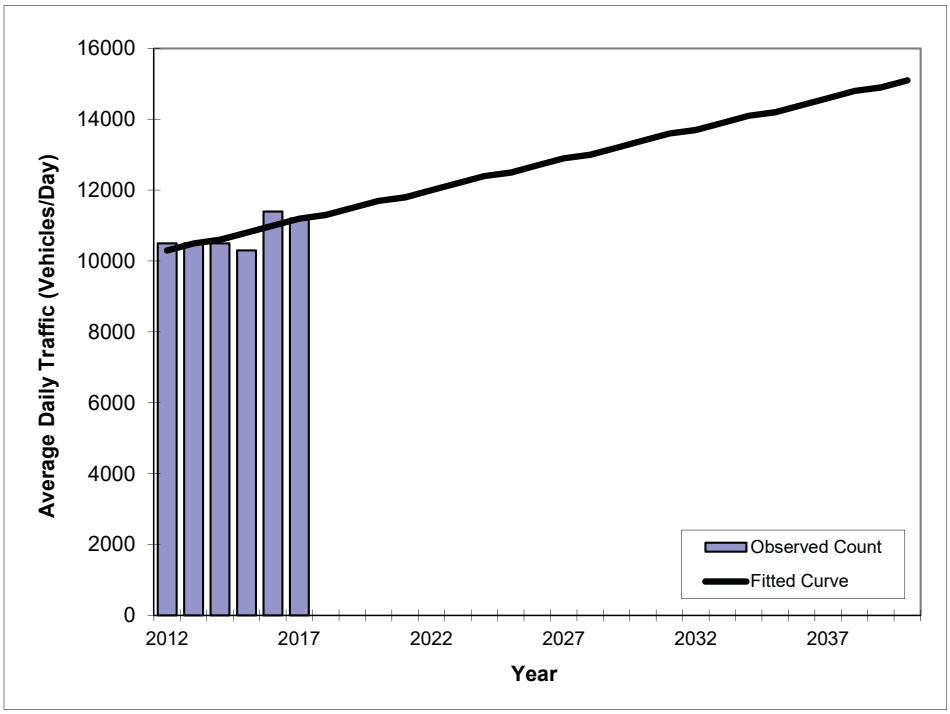

Year	Traffic (ADT/AADT) Count*	Trend**
2012	10500	10300
2013	10500	10500
2014	10500	10600
2015	10300	10800
2016	11400	11000
2017	11200	11200
2020 Opening Year Trend		
2020	N/A	11700
2030 Mid-Year Trend		
2030	N/A	13400
2040 Design Year Trend		
2040	N/A	15100
TRANPLAN Forecasts/Trends		

*Axle-Adjusted

** Annual Trend Increase:	171
Trend R-squared:	50.75%
Trend Annual Historic Growth Rate:	1.75%
Trend Growth Rate (2017 to Design Year):	1.51%
Printed:	2-Oct-18

Straight Line Growth Option

SW 67TH AVE, 200' SOUTH OF NW 72ND STREET --

FIN#	0
Location	1

County:	Miami (87)
Station #:	878308
Highway:	67TH AVE, 200' SOUTH OF NW 72ND STR

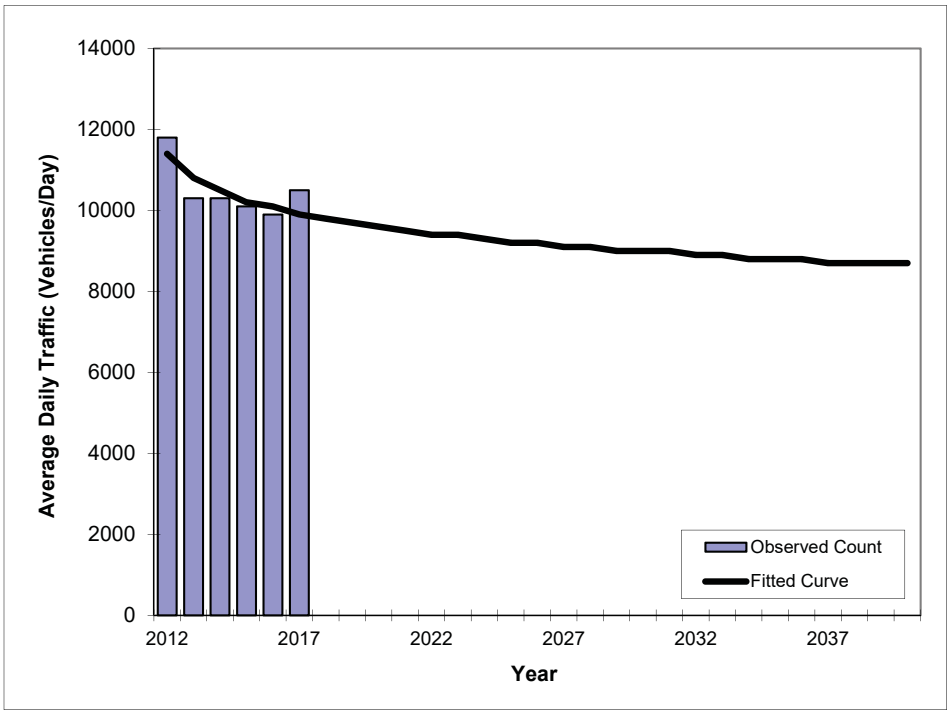

Year	Traffic (ADT/AADT) Count*	Trend**
2012	11800	11400
2013	10300	10800
2014	10300	10500
2015	10100	10200
2016	9900	10100
2017	10500	9900
2020 Opening Year Trend		
2020	N/A	9600
2030 Mid-Year Trend		
2030	N/A	9000
2040 Design Year Trend		
2040	N/A	8700
TRANPLAN Forecasts/Trends		

*Axle-Adjusted

Trend R-squared:	62.28%
Compounded Annual Historic Growth Rate:	-2.78%
Compounded Growth Rate (2017 to Design Year):	-0.56%
Printed:	2-Oct-18

Decaying Exponential Growth Option

Appendix C – SERPM AADT Growth Analysis

A	B	SERPM 2010 Volume	SERPM 2040 Volume	Compound Annual Growth Rate
3701	36314	513	1,545	3.74%
3702	31851	2,375	4,259	1.97%
3703	30244	3,429	4,854	1.17%
3703	31850	2,103	2,369	0.40%
3703	31851	2,205	3,548	1.60%
3704	31585	412	295	-1.10%
3704	31849	1,798	1,126	-1.55%
3704	34601	1,356	2,989	2.67%
3705	34601	772	953	0.71%
3707	28871	711	848	0.59%
3708	28871	1,445	2,611	1.99%
3708	34553	1,688	1,224	-1.07%
3709	34553	2,145	2,205	0.09%
3912	34873	11,786	14,098	0.60%
3912	35027	25,122	32,421	0.85%
3913	34016	1,859	3,547	2.18%
3913	34873	2,805	4,431	1.53%
3914	32478	475	545	0.46%
3914	32481	433	450	0.13%
3915	30232	570	522	-0.29%
3915	32478	332	475	1.20%
3916	28835	1,128	1,594	1.16%
3916	32482	843	687	-0.68%
3916	33440	509	140	-4.22%
3917	30233	987	1,135	0.47%
3917	32388	482	753	1.50%
3918	30179	868	900	0.12%
3918	30233	180	101	-1.90%
3918	33440	822	733	-0.38%
3918	33756	503	745	1.32%
3919	33856	6,556	6,905	0.17%
3920	32391	4,682	4,578	-0.07%
3920	33756	1,573	2,580	1.66%
3921	32232	5,854	6,476	0.34%
3921	32389	4,239	4,824	0.43%
3922	28314	3,356	3,506	0.15%
3928	30246	650	807	0.72%
3928	33867	2,711	3,643	0.99%
3928	34987	1,550	1,291	-0.61%
3929	30245	1,267	1,338	0.18%
3929	31850	1,527	2,215	1.25%
3929	32089	2,134	1,872	-0.44%
3930	30243	462	716	1.47%
3930	32088	4,494	5,033	0.38%
3930	32090	462	632	1.05%
3930	34987	4,574	4,910	0.24%
3931	33872	6,647	8,338	0.76%
3932	32234	1,988	1,917	-0.12%
3932	32902	601	807	0.99%
3933	29787	3,470	3,411	-0.06%
3933	32232	1,115	1,271	0.44%
3934	28852	420	473	0.39%
3934	30237	834	964	0.49%
3935	30237	367	436	0.57%
3938	32234	3,070	3,556	0.49%
3939	32090	1,432	2,774	2.23%
3940	32089	1,326	2,033	1.43%
4012	30235	274	408	1.33%
4013	32392	728	781	0.23%
4016	30179	873	1,178	1.01%
4017	32482	1,827	2,381	0.89%
4021	32484	6,737	6,717	-0.01%
4022	34015	9,136	5,255	-1.83%
4023	34552	1,764	2,803	1.56%

A	B	SERPM 2010 Volume	SERPM 2040 Volume	Compound Annual Growth Rate
4024	32593	2,511	2,833	0.40%
4026	34552	1,909	2,032	0.21%
28081	28083	13,236	8,920	-1.31%
28081	33962	13,591	37,126	3.41%
28081	34986	11,872	30,767	3.23%
28083	29466	15,145	52,741	4.25%
28085	28854	38,224	47,611	0.73%
28156	30645	26,534	28,619	0.25%
28314	3922	3,353	3,508	0.15%
28314	28852	29,066	35,103	0.63%
28314	32233	31,122	35,008	0.39%
28835	3916	1,269	1,380	0.28%
28835	32480	18,104	20,460	0.41%
28835	32483	16,009	17,576	0.31%
28849	28854	27,265	5,386	-5.26%
28852	3934	488	705	1.23%
28852	28314	30,557	34,411	0.40%
28852	32235	28,578	34,399	0.62%
28854	30558	89,169	52,996	-1.72%
28870	28871	12,439	20,067	1.61%
28870	34553	8,952	14,977	1.73%
28870	34986	7,839	25,792	4.05%
28871	3707	708	849	0.61%
28871	3708	1,349	2,540	2.13%
28871	28870	10,585	14,992	1.17%
28871	31585	13,182	20,049	1.41%
29634	28083	1,909	43,821	11.01%
29737	34987	6,555	7,700	0.54%
29747	30242	6,383	7,833	0.68%
29747	30245	5,482	6,386	0.51%
29747	32089	14,543	18,200	0.75%
29747	32090	14,802	18,638	0.77%
29787	3933	3,221	3,134	-0.09%
29787	32088	3,643	5,078	1.11%
29787	32233	2,761	3,716	1.00%
30177	32393	8,160	9,533	0.52%
30178	32394	6,603	6,899	0.15%
30179	3918	951	909	-0.15%
30179	4016	847	1,139	0.99%
30179	32393	6,872	7,000	0.06%
30179	32394	6,874	8,066	0.53%
30181	32391	4,125	4,700	0.44%
30230	32599	3,180	6,216	2.26%
30231	32589	2,788	2,813	0.03%
30231	34016	10,605	11,628	0.31%
30231	34873	12,929	14,014	0.27%
30232	3915	485	582	0.61%
30232	32479	3,323	3,184	-0.14%
30232	32480	3,778	4,205	0.36%
30233	3917	1,044	1,122	0.24%
30233	3918	171	68	-3.03%
30233	32390	5,176	5,111	-0.04%
30233	32479	5,553	6,459	0.51%
30235	4012	264	646	3.03%
30235	32235	7,334	6,991	-0.16%
30235	32391	7,605	7,762	0.07%
30237	3934	758	740	-0.08%
30237	3935	190	391	2.43%
30237	32234	11,524	14,024	0.66%
30237	32235	12,179	15,088	0.72%
30241	32092	14,240	17,738	0.73%
30242	29747	7,006	8,217	0.53%
30243	3930	9	636	15.35%
30244	3703	3,199	4,857	1.40%

A	B	SERPM 2010 Volume	SERPM 2040 Volume	Compound Annual Growth Rate
30244	31586	25,048	33,625	0.99%
30244	31589	19,302	26,500	1.06%
30244	34374	3,774	5,562	1.30%
30245	3929	1,879	1,794	-0.15%
30245	29747	4,207	5,711	1.02%
30245	34987	5,599	6,555	0.53%
30246	3928	297	330	0.36%
30530	30562	101,186	86,293	-0.53%
30555	28861	73,767	86,293	0.52%
30558	30556	85,981	52,996	-1.60%
30562	30555	106,527	86,293	-0.70%
30598	32388	19,567	23,005	0.54%
30616	32478	18,446	22,242	0.63%
30644	28154	26,128	29,176	0.37%
30645	30647	15,789	17,335	0.31%
30645	32588	10,745	11,284	0.16%
30646	30644	10,303	8,770	-0.54%
30647	32592	15,789	17,335	0.31%
30648	30646	10,303	8,770	-0.54%
30648	32592	32,481	34,579	0.21%
30648	32596	43,872	45,129	0.09%
31584	31585	16,955	22,602	0.96%
31585	3704	475	412	-0.47%
31585	28871	11,230	14,904	0.95%
31585	31584	20,384	26,024	0.82%
31585	31586	24,244	34,930	1.22%
31585	34601	8,089	9,180	0.42%
31586	30244	24,244	34,930	1.22%
31586	31585	25,048	33,625	0.99%
31588	34374	3,624	5,244	1.24%
31588	34861	6,375	7,417	0.51%
31588	36314	3,177	5,131	1.61%
31589	30244	20,026	25,515	0.81%
31589	31590	16,092	21,608	0.99%
31589	31851	13,697	18,835	1.07%
31589	36314	3,098	3,851	0.73%
31590	31589	17,212	22,085	0.83%
31848	31849	19,229	22,876	0.58%
31848	34601	8,667	9,151	0.18%
31849	3704	1,703	1,166	-1.25%
31849	31848	18,915	23,650	0.75%
31849	33867	18,790	23,380	0.73%
31850	3703	2,194	2,527	0.47%
31850	3929	1,237	1,970	1.57%
31850	31852	14,968	17,898	0.60%
31850	33867	17,345	22,560	0.88%
31851	3702	2,223	4,215	2.16%
31851	3703	2,366	3,394	1.21%
31851	31589	13,536	16,920	0.75%
31851	31852	14,737	19,482	0.93%
31852	31850	14,403	18,611	0.86%
31852	31851	14,584	17,370	0.58%
31852	31853	15,401	19,552	0.80%
31852	32089	16,152	19,613	0.65%
31853	31852	16,027	20,042	0.75%
32086	33872	23,060	26,861	0.51%
32088	3930	5,366	5,694	0.20%
32088	29787	4,129	5,236	0.79%
32088	32902	17,889	21,540	0.62%
32088	33872	19,231	23,178	0.62%
32089	3929	1,806	1,602	-0.40%
32089	3940	1,166	1,899	1.64%
32089	29747	16,374	20,492	0.75%
32089	31852	14,808	17,724	0.60%

A	B	SERPM 2010 Volume	SERPM 2040 Volume	Compound Annual Growth Rate
32090	3930	378	703	2.09%
32090	3939	1,286	2,729	2.54%
32090	29747	13,622	16,636	0.67%
32090	32091	15,743	19,001	0.63%
32091	32090	14,334	17,025	0.58%
32091	32092	14,478	17,370	0.61%
32091	32234	12,121	15,234	0.76%
32091	32902	17,709	21,696	0.68%
32092	30241	14,478	17,370	0.61%
32092	32091	14,240	17,738	0.73%
32232	3921	5,591	7,402	0.94%
32232	3933	1,350	1,552	0.47%
32232	32233	28,426	35,271	0.72%
32232	36235	36,961	42,153	0.44%
32233	28314	29,627	35,702	0.62%
32233	29787	2,025	3,281	1.62%
32233	32232	30,011	34,461	0.46%
32233	32389	7,330	8,275	0.40%
32234	3932	2,059	1,928	-0.22%
32234	3938	2,955	3,547	0.61%
32234	30237	12,370	15,405	0.73%
32234	32091	11,318	13,849	0.68%
32235	28852	30,137	33,938	0.40%
32235	30235	7,661	7,741	0.03%
32235	30237	11,081	13,437	0.64%
32235	32236	26,461	30,862	0.51%
32236	32235	27,250	29,500	0.26%
32388	3917	392	771	2.28%
32388	30598	19,816	22,616	0.44%
32388	32390	19,175	22,234	0.49%
32389	3921	4,541	3,929	-0.48%
32389	32233	6,684	7,725	0.48%
32389	33856	7,265	7,848	0.26%
32390	30233	5,538	6,315	0.44%
32390	32388	19,334	21,863	0.41%
32390	33756	15,200	18,669	0.69%
32390	33856	5,429	4,175	-0.87%
32391	3920	4,686	4,428	-0.19%
32391	30181	4,228	4,727	0.37%
32391	30235	7,267	7,249	-0.01%
32391	32392	6,795	7,343	0.26%
32392	4013	683	758	0.35%
32392	32391	6,564	6,708	0.07%
32392	32393	7,072	7,876	0.36%
32393	30177	8,081	9,473	0.53%
32393	30179	7,032	8,090	0.47%
32393	32392	6,796	7,218	0.20%
32393	33756	13,739	15,489	0.40%
32394	30178	6,412	7,443	0.50%
32394	30179	6,771	6,946	0.09%
32394	32482	6,204	6,860	0.34%
32394	33440	4,211	4,565	0.27%
32478	3914	562	611	0.28%
32478	3915	413	395	-0.16%
32478	30616	18,987	23,776	0.75%
32478	32480	17,712	21,401	0.63%
32479	30232	3,937	4,214	0.23%
32479	30233	5,239	5,208	-0.02%
32479	33440	4,680	5,491	0.53%
32480	28835	16,710	18,531	0.35%
32480	30232	3,079	3,235	0.16%
32480	32478	18,422	22,920	0.73%
32480	32481	5,089	6,208	0.67%
32481	3914	362	383	0.19%

A	B	SERPM 2010 Volume	SERPM 2040 Volume	Compound Annual Growth Rate
32481	32480	3,705	4,828	0.89%
32481	32586	5,218	6,354	0.66%
32482	3916	873	672	-0.87%
32482	4017	1,514	2,249	1.33%
32482	32394	5,991	6,279	0.16%
32482	32483	6,189	6,762	0.30%
32483	28835	17,545	19,291	0.32%
32483	32482	5,693	6,033	0.19%
32483	32484	7,438	7,997	0.24%
32483	32485	15,327	15,562	0.05%
32484	4021	6,295	6,337	0.02%
32484	32483	7,548	7,639	0.04%
32484	32595	9,386	10,258	0.30%
32485	32483	16,256	16,907	0.13%
32490	32599	42,361	45,463	0.24%
32586	30644	15,826	20,406	0.85%
32586	32481	3,763	4,907	0.89%
32586	32588	3,877	4,967	0.83%
32586	32595	4,377	7,168	1.66%
32588	32586	15,179	16,985	0.38%
32588	34016	11,908	14,051	0.55%
32589	30231	6,294	5,975	-0.17%
32589	34015	2,788	2,813	0.03%
32591	34432	32,366	33,261	0.09%
32592	30648	43,872	45,129	0.09%
32593	4024	2,520	2,855	0.42%
32594	32598	9,159	10,027	0.30%
32595	32484	9,055	9,519	0.17%
32595	32586	7,447	14,108	2.15%
32595	32596	7,236	8,327	0.47%
32595	32599	3,480	5,989	1.83%
32596	30648	42,784	43,349	0.04%
32596	32595	7,965	9,380	0.55%
32596	32599	41,921	42,503	0.05%
32596	34552	7,741	9,175	0.57%
32598	32594	7,923	8,596	0.27%
32598	34552	9,159	10,027	0.30%
32599	30230	3,126	5,252	1.74%
32599	32490	42,287	43,320	0.08%
32599	32595	5,490	11,138	2.39%
32599	32596	40,039	40,461	0.03%
32902	3932	549	803	1.28%
32902	32088	18,309	22,503	0.69%
32902	32091	17,340	20,737	0.60%
33440	3916	333	385	0.48%
33440	3918	779	704	-0.34%
33440	32394	4,129	4,570	0.34%
33440	32479	4,981	5,269	0.19%
33756	3918	510	790	1.47%

A	B	SERPM 2010 Volume	SERPM 2040 Volume	Compound Annual Growth Rate
33756	3920	1,594	2,793	1.89%
33756	32390	15,366	18,039	0.54%
33756	32393	13,544	15,861	0.53%
33782	34553	6,151	13,734	2.71%
33856	3919	6,545	6,888	0.17%
33856	32389	6,921	6,403	-0.26%
33856	32390	5,784	5,638	-0.09%
33867	3928	2,755	3,630	0.92%
33867	31849	18,381	24,194	0.92%
33867	31850	17,710	21,759	0.69%
33872	3931	6,573	8,372	0.81%
33872	32086	22,195	26,972	0.65%
33872	32088	20,170	23,033	0.44%
33962	28081	14,103	25,882	2.04%
34015	4022	4,145	3,734	-0.35%
34015	32589	6,294	5,975	-0.17%
34015	34433	5,160	4,652	-0.34%
34015	35024	3,423	1,810	-2.10%
34016	3913	2,138	3,812	1.95%
34016	30231	9,770	10,628	0.28%
34016	32588	12,464	14,785	0.57%
34374	30244	3,624	5,244	1.24%
34374	31588	3,774	5,562	1.30%
34432	32591	35,801	37,710	0.17%
34432	34433	6,124	6,987	0.44%
34433	34015	6,124	6,987	0.44%
34433	34432	5,160	4,652	-0.34%
34552	4023	1,758	2,793	1.56%
34552	4026	1,628	2,158	0.94%
34552	32596	9,264	10,489	0.41%
34552	32598	7,923	8,596	0.27%
34553	3708	1,767	1,299	-1.02%
34553	3709	2,100	2,162	0.10%
34553	28870	8,589	15,078	1.89%
34553	33782	6,481	13,601	2.50%
34601	3704	1,392	2,852	2.42%
34601	3705	1,053	1,230	0.52%
34601	31585	8,825	8,879	0.02%
34601	31848	7,613	9,313	0.67%
34861	31588	5,973	7,491	0.76%
34873	3912	19,553	21,377	0.30%
34873	3913	2,525	4,158	1.68%
34873	30231	10,259	11,852	0.48%
34873	34874	3,504	5,052	1.23%
34874	34873	8,320	9,896	0.58%
34986	28081	7,839	25,792	4.05%
34986	28870	11,250	30,767	3.41%
34987	3928	1,823	1,761	-0.12%
34987	3930	4,264	4,222	-0.03%
34987	29737	7,255	8,137	0.38%
34987	30245	4,935	6,336	0.84%
35024	34015	974	1,117	0.46%
35024	35025	3,423	1,810	-2.10%
35025	35024	974	1,117	0.46%
35025	35026	3,423	1,810	-2.10%
35026	35025	974	1,117	0.46%
35027	3912	17,604	25,276	1.21%
36235	32232	35,348	44,171	0.75%
36314	3701	496	1,483	3.72%
36314	31588	3,429	4,740	1.09%
36314	31589	2,863	4,305	1.37%
		Average		**0.65%**

Appendix D – SERPM SED Growth Analysis

TAZ_REG	Population 2010	Employment 2010	Population 2040	Employment 2040	Population Growth	Employment Growth
3912	46	3,211	55	5,730	0.60%	1.95%
3913	3,132	191	5,685	231	2.01%	0.64%
3914	547	231	589	285	0.25%	0.70%
3915	679	45	731	55	0.25%	0.67%
3916	897	936	860	1,141	-0.14%	0.66%
3917	842	273	856	342	0.05%	0.75%
3918	313	266	325	337	0.13%	0.79%
3919	602	2,862	738	3,373	0.68%	0.55%
3920	2,405	209	2,719	254	0.41%	0.65%
3921	164	4,755	156	5,944	-0.17%	0.75%
3922	877	693	911	828	0.13%	0.60%
3928	2,751	701	2,722	901	-0.04%	0.84%
3929	1,809	1,179	1,755	1,527	-0.10%	0.87%
3930	5,263	1,375	5,204	2,047	-0.04%	1.34%
3931	370	2,353	320	3,407	-0.48%	1.24%
3932	1,446	284	1,467	414	0.05%	1.26%
3933	2,719	613	2,734	869	0.02%	1.17%
3934	573	155	612	237	0.22%	1.43%
3935	779	280	811	348	0.13%	0.73%
3938	3,145	306	3,193	372	0.05%	0.65%
3939	2,241	312	3,547	418	1.54%	0.98%
3940	2,365	799	3,886	1,251	1.67%	1.51%
4012	1,466	350	1,493	410	0.06%	0.53%
4013	1,111	69	1,136	81	0.07%	0.54%
4016	1,204	89	1,218	106	0.04%	0.58%
4017	1,221	1,000	1,750	1,322	1.21%	0.93%
4021	610	3,663	967	4,633	1.55%	0.79%
4022	130	589	189	771	1.26%	0.90%
4023	1	337	707	396	24.45%	0.54%
4024	950	393	1,124	494	0.56%	0.77%
4025	211	163	180	209	-0.53%	0.83%
4026	1,167	802	1,623	1,147	1.11%	1.20%
4068	1,643	1,292	1,823	1,535	0.35%	0.58%
3654	1	19,080	1	22,156	0.00%	0.50%
3700	1	174	1	230	0.00%	0.93%
3701	2,457	415	2,966	562	0.63%	1.02%
3702	3,298	364	4,633	712	1.14%	2.26%
3703	2,544	1,420	4,155	1,846	1.65%	0.88%
3704	1,501	552	2,039	812	1.03%	1.29%
3705	1,016	229	1,095	389	0.25%	1.78%
3706	1,063	218	1,065	261	0.01%	0.60%
3707	739	14	781	17	0.18%	0.65%
3708	1,984	23	2,109	76	0.20%	4.06%
3709	1	655	1	860	0.00%	0.91%
3710	1	467	1	527	0.00%	0.40%
3711	25	1,565	30	2,015	0.61%	0.85%
Average					**0.94%**	**0.98%**
Population and Employment Average						**0.96%**

Appendix E – Strava Growth Analysis

--

FIN#	0
Location	1

County:	Miami (87)
Station #:	Strava_Ride
Highway:	0

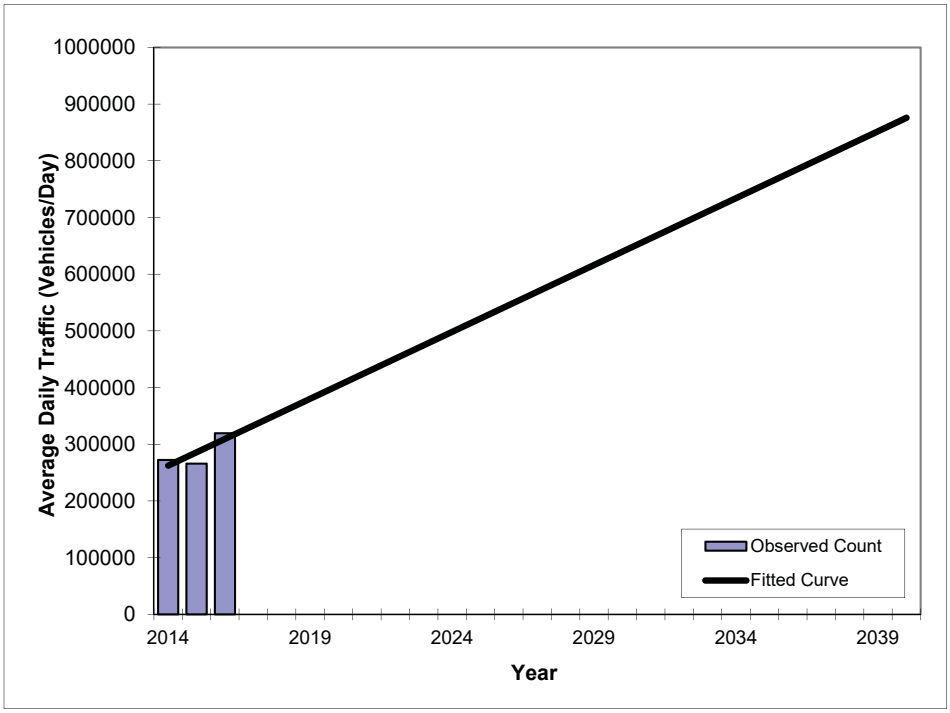

Year	Traffic (ADT/AADT) Count*	Trend**
2014	272300	262300
2015	265900	285900
2016	319500	309500
2020 Opening Year Trend		
2020	N/A	403900
2030 Mid-Year Trend		
2030	N/A	639900
2040 Design Year Trend		
2040	N/A	875900
TRANPLAN Forecasts/Trends		

*Axle-Adjusted

** Annual Trend Increase:	23,600
Trend R-squared:	64.99%
Trend Annual Historic Growth Rate:	9.00%
Trend Growth Rate (2016 to Design Year):	7.63%
Printed:	3-Oct-18

Straight Line Growth Option

--

FIN#	0
Location	1

County:	Miami (87)
Station #:	Strava_Run
Highway:	0

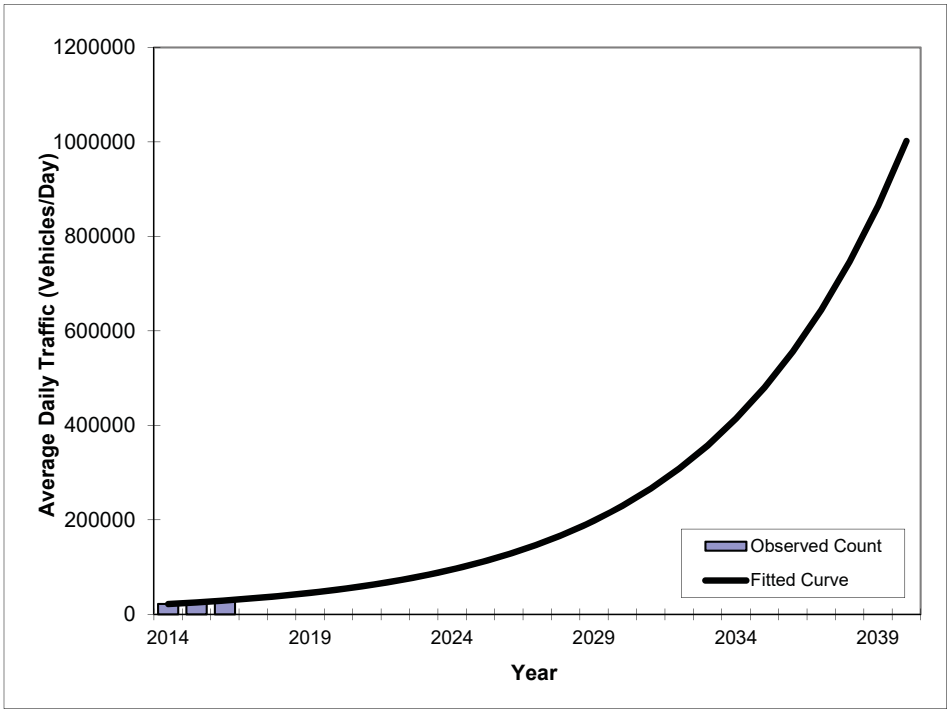

Year	Traffic (ADT/AADT) Count*	Trend**
2014	22200	21800
2015	24400	25300
2016	29800	29300
2020 Opening Year Trend		
2020	N/A	52800
2030 Mid-Year Trend		
2030	N/A	229900
2040 Design Year Trend		
2040	N/A	1002200
TRANPLAN Forecasts/Trends		

*Axle-Adjusted

Trend R-squared:	95.90%
Compounded Annual Historic Growth Rate:	15.93%
Compounded Growth Rate (2016 to Design Year):	15.86%
Printed:	3-Oct-18

Exponential Growth Option

Appendix F – Seasonal Factor

2017 PEAK SEASON FACTOR CATEGORY REPORT - REPORT TYPE: ALL
CATEGORY: 8701 MIAMI-DADE SOUTH

MOCF: 0.99

WEEK	DATES	SF	PSCF
1	01/01/2017 - 01/07/2017	0.99	1.00
2	01/08/2017 - 01/14/2017	1.01	1.02
3	01/15/2017 - 01/21/2017	1.02	1.03
4	01/22/2017 - 01/28/2017	1.01	1.02
5	01/29/2017 - 02/04/2017	1.01	1.02
6	02/05/2017 - 02/11/2017	1.00	1.01
* 7	02/12/2017 - 02/18/2017	0.99	1.00
* 8	02/19/2017 - 02/25/2017	0.99	1.00
* 9	02/26/2017 - 03/04/2017	0.99	1.00
*10	03/05/2017 - 03/11/2017	0.99	1.00
*11	03/12/2017 - 03/18/2017	0.99	1.00
*12	03/19/2017 - 03/25/2017	0.99	1.00
*13	03/26/2017 - 04/01/2017	0.99	1.00
*14	04/02/2017 - 04/08/2017	0.98	0.99
*15	04/09/2017 - 04/15/2017	0.98	0.99
*16	04/16/2017 - 04/22/2017	0.98	0.99
*17	04/23/2017 - 04/29/2017	0.99	1.00
*18	04/30/2017 - 05/06/2017	0.99	1.00
*19	05/07/2017 - 05/13/2017	1.00	1.01
20	05/14/2017 - 05/20/2017	1.00	1.01
21	05/21/2017 - 05/27/2017	1.00	1.01
22	05/28/2017 - 06/03/2017	1.00	1.01
23	06/04/2017 - 06/10/2017	1.00	1.01
24	06/11/2017 - 06/17/2017	1.00	1.01
25	06/18/2017 - 06/24/2017	1.00	1.01
26	06/25/2017 - 07/01/2017	1.01	1.02
27	07/02/2017 - 07/08/2017	1.02	1.03
28	07/09/2017 - 07/15/2017	1.02	1.03
29	07/16/2017 - 07/22/2017	1.03	1.04
30	07/23/2017 - 07/29/2017	1.03	1.04
31	07/30/2017 - 08/05/2017	1.02	1.03
32	08/06/2017 - 08/12/2017	1.02	1.03
33	08/13/2017 - 08/19/2017	1.01	1.02
34	08/20/2017 - 08/26/2017	1.01	1.02
35	08/27/2017 - 09/02/2017	1.02	1.03
36	09/03/2017 - 09/09/2017	1.02	1.03
37	09/10/2017 - 09/16/2017	1.03	1.04
38	09/17/2017 - 09/23/2017	1.03	1.04
39	09/24/2017 - 09/30/2017	1.02	1.03
40	10/01/2017 - 10/07/2017	1.02	1.03
41	10/08/2017 - 10/14/2017	1.01	1.02
42	10/15/2017 - 10/21/2017	1.00	1.01
43	10/22/2017 - 10/28/2017	1.00	1.01
44	10/29/2017 - 11/04/2017	1.01	1.02
45	11/05/2017 - 11/11/2017	1.01	1.02
46	11/12/2017 - 11/18/2017	1.01	1.02
47	11/19/2017 - 11/25/2017	1.01	1.02
48	11/26/2017 - 12/02/2017	1.00	1.01
49	12/03/2017 - 12/09/2017	1.00	1.01
50	12/10/2017 - 12/16/2017	0.99	1.00
51	12/17/2017 - 12/23/2017	0.99	1.00
52	12/24/2017 - 12/30/2017	1.01	1.02
53	12/31/2017 - 12/31/2017	1.02	1.03

* PEAK SEASON

Appendix G – Signal TODs and SOPs

SIGNAL OPERATING PLAN

N

	Direction	EB		WB					NB		Ped Heads				Movements/Display/Actuation
Timing Phases	Head No.	6		5/2	2				4	4R					
(2+5)	Dwell	R		<G/G	G				R	R					
WB	(2+5)	R		<Y/G	G				R	R					
(Actuated)															
(2+6)	Dwell	G		G	G				R	R					
EW	4	Y		Y	Y				R	R					
(Recall)															
(4)	Dwell	R		R	R				G	G					
NB	(2+5)	R		R	R				Y	Y					
(Actuated)	(2+6)	R		R	R				Y	Y					
Flashing Operation		FY		FY	FY				FR	FR					Page 1 of 1

Miami-Dade County Public Works Department

Drawn	Date	SW 70 AV & 80 ST		
F Badrampour	01/09			
Checked	Date	Placed in Service	Phasing No.	Asset Number
H.Hernandez	11/5/08	Date 09/25 - 11/08 By	4	4684

QuadPEXPads

TOD Schedule Report

for 4684: SW 70 Av&SW 80 St

Print Date: 5/22/2018

Print Time: 3:37 PM

Asset	Intersection	TOD Schedule	Op Mode	Plan #	Cycle	Offset	TOD Setting	Active PhaseBank	Active Maximum
4684	SW 70 Av&SW 80 St	DOW-3		N/A	0	0	N/A	0	Max 0

Splits

PH 1	PH 2	PH 3	PH 4	PH 5	PH 6	PH 7	PH 8
-	WBT	-	NBL	WBL	EBT	-	-
0	0	0	0	0	0	0	0

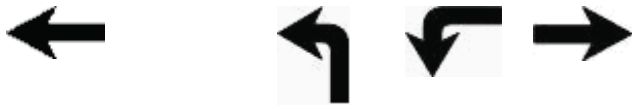

Active Phase Bank: Phase Bank 1

Phase	Walk (Phase Bank 1 / 2 / 3)	Don't Walk (1 / 2 / 3)	Min Initial (1 / 2 / 3)	Veh Ext (1 / 2 / 3)	Max Limit (1 / 2 / 3)	Max 2 (1 / 2 / 3)	Yellow	Red
1 -	0 - 0 - 0	0 - 0 - 0	0 - 0 - 0	0 - 0 - 0	0 - 0 - 0	0 - 0 - 0	0	0
2 WBT	0 - 0 - 0	0 - 0 - 0	15 - 15 - 15	1 - 1 - 1	30 - 40 - 30	0 - 30 - 0	4	3.5
3 -	0 - 0 - 0	0 - 0 - 0	0 - 0 - 0	0 - 0 - 0	0 - 0 - 0	0 - 0 - 0	0	0
4 NBL	2 - 2 - 2	9 - 9 - 9	7 - 7 - 7	2.5 - 2.5 - 2.5	20 - 18 - 18	20 - 15 - 0	4	2
5 WBL	0 - 0 - 0	0 - 0 - 0	5 - 5 - 5	2 - 2 - 2	7 - 7 - 7	0 - 7 - 0	3.7	3.5
6 EBT	0 - 0 - 0	0 - 0 - 0	15 - 15 - 15	1 - 1 - 1	30 - 40 - 30	0 - 30 - 0	4	3.5
7 -	0 - 0 - 0	0 - 0 - 0	0 - 0 - 0	0 - 0 - 0	0 - 0 - 0	0 - 0 - 0	0	0
8 -	0 - 0 - 0	0 - 0 - 0	0 - 0 - 0	0 - 0 - 0	0 - 0 - 0	0 - 0 - 0	0	0

Last In Service Date: unknown

Permitted Phases

	12345678
Default	-2-456--
External Permit 0	-2-4-6--
External Permit 1	-2-4-6--
External Permit 2	-2-4-6--

Current TOD Schedule	Plan	Cycle	1	2	3	4	5	6	7	8	Ring Offset	Offset
			-	WBT	-	NBL	WBL	EBT	-	-		

Local TOD Schedule

Time	Plan	DOW
0000	Flash	Su M T W Th F S
0500	Free	Su M T W Th F S

TOD Schedule Report

for 4684: SW 70 Av&SW 80 St

Print Date: 5/22/2018

Print Time: 3:37 PM

Current Time of Day Function

Time	Function	Settings *	Day of Week
0000	TOD OUTPUTS	--------	SuM T W ThF S
0500	TOD OUTPUTS	------2-	SuM T W ThF S
0630	TOD OUTPUTS	-------1	M T W ThF
0900	TOD OUTPUTS	------2-	M T W ThF
1600	TOD OUTPUTS	-------1	M T W ThF
1900	TOD OUTPUTS	------2-	M T W ThF

Local Time of Day Function

Time	Function	Settings *	Day of Week
0000	TOD OUTPUTS	--------	SuM T W ThF S
0500	TOD OUTPUTS	------2-	SuM T W ThF S
0630	TOD OUTPUTS	-------1	M T W ThF
0900	TOD OUTPUTS	------2-	M T W ThF
1600	TOD OUTPUTS	-------1	M T W ThF
1900	TOD OUTPUTS	------2-	M T W ThF

* Settings

Blank - FREE - Phase Bank 1, Max 1
Blank - Plan - Phase Bank 1, Max 2
1 - Phase Bank 2, Max 1
2 - Phase Bank 2, Max 2
3 - Phase Bank 3, Max 1
4 - Phase Bank 3, Max 2
5 - EXTERNAL PERMIT 1
6 - EXTERNAL PERMIT 2
7 - X-PED OMIT
8 - TBA

No Calendar Defined/Enabled

SIGNAL OPERATING PLAN

N

Timing Phases	Direction		EB					WB				SB	NB			Ped Heads			
	Head No.		1	5	6R	1A	6A	5	2	5A	2A	6A	7/4	4R	4A	PB	P2A	PB	Movements/Display/Actuation
(2+5)	Dwell		<R	R	R	<R	R	<G	G	<G/G	G	R	R	R/G>	R	DW	W/F	DW	
WB	Cycle	(2+6)	<R	R	R	<R	R	<Y	G	<Y	G	R	R	R/Y>	R	DW	DW	DW	
Coral Way																			
(Actuated)																			
	Dwell																		
	Cycle																		
	Dwell																		
	Cycle																		
(2+6)	Dwell		<R	G	G	<R	G	<R	G	<R	G	R	R	R	R	W/F	W/F	DW	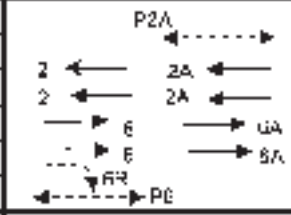
E/W	Cycle	(3)	<R	G	G	<R	G	<R	Y	<R	Y	R	R	R	R	DW	DW	DW	
		(2+5)	<R	Y	Y	<R	Y	<R	G	<R	G	R	R	R	R	DW	DW	DW	
Coral Way		(4)	<R	Y	Y	<R	G	<R	Y	<R	Y	R	R	R	R	DW	DW	DW	
		(7)	<R	Y	Y	<R	Y	<R	G	<R	Y	R	R	R	R	DW	DW	DW	
(Recall)		(8)	<R	Y	Y	<R	Y	<R	Y	<R	G	R	R	R	R	DW	DW	DW	
(3)	Dwell		<G/G	G	G/G>	<G	G	<R	R	R	R	R	R	R	R	DW	DW	DW	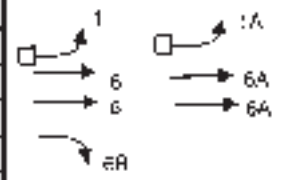
EB	Cycle	(4)	<Y	Y	Y/Y>	<Y	Y	<R	R	R	R	R	R	R	R	DW	DW	DW	
		(7)	<Y	Y	Y/Y>	<Y	Y	<R	R	R	R	R	R	R	R	DW	DW	DW	
Coral Way		(8)	<Y	Y	Y/Y>	<Y	Y	<R	R	R	R	R	R	R	R	DW	DW	DW	
		(2+5)	<Y	Y	Y/Y>	<Y	Y	<R	R	R	R	R	R	R	R	DW	DW	DW	
		(2+6)	<Y	G	G/Y>	<Y	G	<R	R	R	R	R	R	R	R	DW	DW	DW	
(Actuated)																			
(4)	Dwell		<R	R	R	<G	G	<R	R	R	R	R	<G/G	G	R	DW	DW	DW	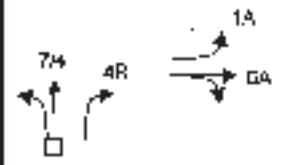
NB	Cycle	(7)	<R	R	R	<Y	Y	<R	R	R	R	R	<Y/Y	Y	R	DW	DW	DW	
		(8)	<R	R	R	<Y	Y	<R	R	R	R	R	<Y/Y	Y	R	DW	DW	DW	
SW 70 Ct		(2+5)	<R	R	R	<Y	Y	<R	R	R	R	R	<Y/Y	Y	R	DW	DW	DW	
		(2+6)	<R	R	R	<Y	Y	<R	R	R	R	R	<Y/Y	Y	R	DW	DW	DW	
(Actuated)																			
(7)	Dwell		<R	R	R	<R	R	<G	G	<R	R	G	R	R/G>	G	DW	DW	DW	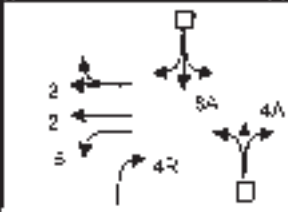
N/S	Cycle	(8)	<R	R	R	<R	R	<G	Y	<R	R	Y	R	R/G>	Y	DW	DW	DW	
		(2+5)	<R	R	R	<R	R	<G	G	<R	R	Y	R	R/G>	Y	DW	DW	DW	
SW 70 Ct		(2+6)	<R	R	R	<R	R	<Y	G	<R	R	Y	R	R/Y>	Y	DW	DW	DW	
(Actuated)																			
(8)	Dwell		<R	R	R	<R	R	<G	R	<G/G	G	R	R	R/G>	R	DW	DW	W/F	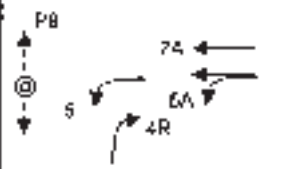
WB	Cycle	(2+5)	<R	R	R	<R	R	<G	R	<G/G	G	R	R	R/G>	R	DW	DW	DW	
Coral Way		(2+6)	<R	R	R	<R	R	<Y	R	Y	G	R	R	R/Y>	R	DW	DW	DW	
(Actuated)																			
Flashing Operation			F<R	FY	FY	F<R	FY	F<R	FY	F<R	FY	FR	FR	FR	FR				Page 1 of 1

Miami-Dade County Public Works Department

Drawn	Date	Coral Way & SW 70 Ct		
R. Marin	4/1/2014			
Checked	Date	Placed in Service	Phasing No.	Asset Number
H. Hernandez	4/8/14	Date	1	6922

TOD Schedule Report

for 6922: Coral Way&SW 70 Ct

Print Date: 11/21/2017

Print Time: 10:36 AM

Asset	Intersection	TOD Schedule	Op Mode	Plan #	Cycle	Offset	TOD Setting	Active PhaseBank	Active Maximum
6922	Coral Way&SW 70 Ct	DOW-3		N/A	0	0	N/A	0	Max 0

Splits

PH 1	PH 2	PH 3	PH 4	PH 5	PH 6	PH 7	PH 8
-	WBT	EBL	NBT	WBL	EBT	NS	WL+PED
0	0	0	0	0	0	0	0

Active Phase Bank: Phase Bank 1

Phase	Walk (Phase Bank 1 / 2 / 3)	Don't Walk (1 / 2 / 3)	Min Initial (1 / 2 / 3)	Veh Ext (1 / 2 / 3)	Max Limit (1 / 2 / 3)	Max 2 (1 / 2 / 3)	Yellow	Red
1 -	0 - 0 - 0	0 - 0 - 0	0 - 0 - 0	0 - 0 - 0	0 - 0 - 0	0 - 0 - 0	0	0
2 WBT	7 - 7 - 7	9 - 9 - 9	7 - 7 - 7	1 - 1 - 1	40 - 40 - 40	0 - 40 - 40	4.4	2
3 EBL	0 - 0 - 0	0 - 0 - 0	5 - 5 - 5	3 - 2 - 2	7 - 7 - 7	13 - 12 - 12	3.7	2
4 NBT	0 - 0 - 0	0 - 0 - 0	7 - 7 - 7	2.5 - 2.5 - 2.5	10 - 10 - 10	59 - 32 - 32	4	2
5 WBL	0 - 0 - 0	0 - 0 - 0	5 - 5 - 5	3 - 2 - 2	7 - 7 - 7	13 - 12 - 12	3.7	2
6 EBT	7 - 7 - 7	14 - 14 - 14	7 - 7 - 7	1 - 1 - 1	40 - 40 - 40	0 - 40 - 40	4.4	2
7 NS	0 - 0 - 0	0 - 0 - 0	5 - 5 - 5	2 - 2 - 2	5 - 5 - 5	15 - 15 - 7	3.7	2
8 WL+	7 - 7 - 7	21 - 21 - 21	7 - 7 - 7	2.5 - 2.5 - 2.5	10 - 10 - 10	49 - 32 - 32	4	2

Last In Service Date: 06/25/2014 15:08

Permitted Phases

	12345678
Default	-2345678
External Permit 0	-2-4-6-8
External Permit 1	-2-4-6-8
External Permit 2	-2-4-6-8

TOD Schedule Report

for 6922: Coral Way&SW 70 Ct

Print Date: 11/21/2017

Print Time: 10:36 AM

Current TOD Schedule	Plan	Cycle	Green Time 1 -	2 WBT	3 EBL	4 NBT	5 WBL	6 EBT	7 NS	8 WL+	Ring Offset	Offset
	1	140	0	68	6	10	**	68	11	15	0	65
	2	180	0	86	12	14	**	86	14	24	0	61
	3	105	0	31	7	12	**	31	13	12	0	76
	4	120	0	45	7	13	**	45	12	13	0	86
	5	100	0	26	6	13	**	26	13	12	0	73
	6	180	0	104	10	9	**	104	6	21	0	160
	7	120	0	49	6	12	**	49	15	8	0	86
	8	170	0	96	7	10	**	96	13	14	0	65
	9	160	0	100	6	7	**	100	9	8	0	15
	10	140	0	80	6	7	**	80	9	8	0	9
	11	90	0	33	6	7	**	33	7	7	0	0
	13	90	0	29	6	8	**	29	9	8	0	60
	14	130	0	58	6	10	**	58	11	15	0	65
	15	140	0	68	7	9	**	68	11	15	0	39
	16	140	0	68	7	8	**	68	12	15	0	55
	17	150	0	77	7	9	**	77	12	15	0	101
	18	140	0	66	8	9	**	66	11	16	0	39
	19	110	0	38	6	8	**	38	12	16	0	102
	20	110	0	39	6	9	**	39	12	14	0	104
	21	180	0	107	8	8	**	107	10	17	0	25

Local TOD Schedule

Time	Plan	DOW
0000	9	Su S
0000	Flash	M T W Th F
0100	10	Su S
0100	Flash	M T W Th F
0130	Flash	Su S
0500	11	M T W Th F
0530	Flash	Su S
0530	1	M T W Th F
0600	6	M T W Th F
0600	9	Su S
0700	5	Su S
0800	21	Su S
0930	14	M T W Th F
1345	8	M T W Th F
1430	2	M T W Th F
1800	19	Su S
2000	14	M T W Th F
2100	5	M T W Th F
2100	5	Su S
2200	9	M T W Th F

Current Time of Day Function

Time	Function	Settings *	Day of Week
0000	TOD OUTPUTS	--------	M T W ThF
0530	TOD OUTPUTS	---5----	M T W ThF
0600	TOD OUTPUTS	--------	M T W ThF
2200	TOD OUTPUTS	--6-----	M T W ThF

Local Time of Day Function

Time	Function	Settings *	Day of Week
0000	TOD OUTPUTS	--------	M T W ThF
0000	TOD OUTPUTS	---5----	Su S
0530	TOD OUTPUTS	---5----	M T W ThF
0600	TOD OUTPUTS	--------	M T W ThF
0700	TOD OUTPUTS	--------	Su S
2200	TOD OUTPUTS	--6-----	M T W ThF

* Settings

Blank - FREE - Phase Bank 1, Max 1
Blank - Plan - Phase Bank 1, Max 2
1 - Phase Bank 2, Max 1
2 - Phase Bank 2, Max 2
3 - Phase Bank 3, Max 1
4 - Phase Bank 3, Max 2
5 - EXTERNAL PERMIT 1
6 - EXTERNAL PERMIT 2
7 - X-PED OMIT
8 - TBA

No Calendar Defined/Enabled

SIGNAL OPERATING PLAN

N

Timing Phases	Direction	WB	EB	SB	NB	Ped Heads	Movements/Display/Actuation
	Head No.	6	2	8	4		
(2+6) E/WB SW 16 ST RECALL	Dwell	G	G				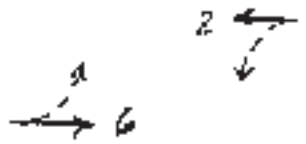
	Clearance	Y	Y				
(4+8) N/SB SW 70 ST Actuated	Dwell			G	G		
	Clearance			Y	Y		
	Dwell						
	Clearance						
	Dwell						
	Clearance						
	Dwell						
	Clearance						
	Dwell						
	Clearance						REDS NOT SHOWN
Flashing Operation		FY	FY	FR	FR		Page 1 of 1

Miami-Dade County Public Works Department

Drawn	Date	SW 70 AV & SW 16 ST		
Checked H. HERNANDEZ	Date 8/11/04	Placed In Service: Date 11/15/04 By Hope power	Phasing No. 1	Asset Number 6418

TOD Schedule Report
for 6418: SW 70 Av&SW 16 St

Print Date: 5/22/2018

Print Time: 6:31 PM

Asset	Intersection	TOD Schedule	Op Mode	Plan #	Cycle	Offset	TOD Setting	Active PhaseBank	Active Maximum
6418	SW 70 Av&SW 16 St	DOW-3		N/A	0	0	N/A	0	Max 0

Splits

PH 1	PH 2	PH 3	PH 4	PH 5	PH 6	PH 7	PH 8
-	EBT	-	NBT	-	WBT	-	SBT
0	0	0	0	0	0	0	0

Active Phase Bank: Phase Bank 1

Phase	Walk (Phase Bank 1 - 2 - 3)	Don't Walk (1 - 2 - 3)	Min Initial (1 - 2 - 3)	Veh Ext (1 - 2 - 3)	Max Limit (1 - 2 - 3)	Max 2 (1 - 2 - 3)	Yellow	Red
1 -	0 - 0 - 0	0 - 0 - 0	0 - 0 - 0	0 - 0 - 0	0 - 0 - 0	0 - 0 - 0	0	0
2 EBT	0 - 0 - 0	0 - 0 - 0	12 - 12 - 12	1 - 1 - 1	20 - 35 - 30	0 - 0 - 0	4	2
3 -	0 - 0 - 0	0 - 0 - 0	0 - 0 - 0	0 - 0 - 0	0 - 0 - 0	0 - 0 - 0	0	0
4 NBT	1 - 1 - 1	10 - 10 - 10	7 - 7 - 7	2.5 - 2.5 - 2.5	12 - 20 - 20	20 - 0 - 0	4	2
5 -	0 - 0 - 0	0 - 0 - 0	0 - 0 - 0	0 - 0 - 0	0 - 0 - 0	0 - 0 - 0	0	0
6 WBT	0 - 0 - 0	0 - 0 - 0	12 - 12 - 12	1 - 1 - 1	20 - 35 - 30	0 - 0 - 0	4	2
7 -	0 - 0 - 0	0 - 0 - 0	0 - 0 - 0	0 - 0 - 0	0 - 0 - 0	0 - 0 - 0	0	0
8 SBT	0 - 0 - 0	0 - 0 - 0	7 - 7 - 7	2.5 - 2.5 - 2.5	12 - 20 - 20	20 - 0 - 0	4	2

Last In Service Date: unknown

Permitted Phases

	12345678
Default	-2-4-6-8
External Permit 0	--------
External Permit 1	--------
External Permit 2	--------

Current TOD Schedule	Plan	Cycle	1	2	3	4	5	6	7	8	Ring Offset	Offset
			-	EBT	-	NBT	-	WBT	-	SBT		

Local TOD Schedule

Time	Plan	DOW
0000	Free	Su M T W Th F S

TOD Schedule Report

for 6418: SW 70 Av&SW 16 St

Print Date: 5/22/2018

Print Time: 6:31 PM

Current Time of Day Function

Time	Function	Settings *	Day of Week
0600	TOD OUTPUTS	-------1	SuM T W ThF S
0900	TOD OUTPUTS	--------	SuM T W ThF S
1500	TOD OUTPUTS	-----3--	SuM T W ThF S
1800	TOD OUTPUTS	--------	SuM T W ThF S

Local Time of Day Function

Time	Function	Settings *	Day of Week
0600	TOD OUTPUTS	-------1	SuM T W ThF S
0900	TOD OUTPUTS	--------	SuM T W ThF S
1500	TOD OUTPUTS	-----3--	SuM T W ThF S
1800	TOD OUTPUTS	--------	SuM T W ThF S

* Settings

Blank - FREE - Phase Bank 1, Max 1
Blank - Plan - Phase Bank 1, Max 2
1 - Phase Bank 2, Max 1
2 - Phase Bank 2, Max 2
3 - Phase Bank 3, Max 1
4 - Phase Bank 3, Max 2
5 - EXTERNAL PERMIT 1
6 - EXTERNAL PERMIT 2
7 - X-PED OMIT
8 - TBA

No Calendar Defined/Enabled

SIGNAL OPERATING PLAN

N

	Direction	EB		WB		SB		NB	Ped Heads			
Timing Phases	Head No.	1/6	6	5/2	2	3/8	8R	4	P6	P2		P4
(1+5)	Dwell	<G/R	R	<G/R	R	R	R/G>	R	DW	DW		DW
	Clear to (1+6)	<G/R	R	<Y/R	R	R	R/G>	R	DW	DW		DW
	(2+5)	<Y/R	R	<G/R	R	R	R/Y>	R	DW	DW		DW
	(2+6)	<Y/R	R	<Y/R	R	R	R/Y>	R	DW	DW		DW
	(3+8)	<Y/R	R	<Y/R	R	R	R/Y>	R	DW	DW		DW
	(4+8)	<Y/R	R	<Y/R	R	R	R/Y>	R	DW	DW		DW
	(PE1C)	<G/R	R	<Y/R	R	R	R/Y>	R	DW	DW		DW
(Actuated)	(PE2C)	<Y/R	R	<G/R	R	R	R/Y>	R	DW	DW		DW
(1+6)	Dwell	<G/G	G	R	R	R	R/G>	R	W/F	DW		DW
	Clear to (2+6)	<Y/G	G	R	R	R	R/Y>	R	DW	DW		DW
	(3+8)	<Y/Y	Y	R	R	R	R/Y>	R	DW	DW		DW
	(4+8)	<Y/Y	Y	R	R	R	R/Y>	R	DW	DW		DW
	(PE1C)	<G/G	G	R	R	R	R/Y>	R	DW	DW		DW
	(PE2C)	<Y/Y	Y	R	R	R	R/Y>	R	DW	DW		DW
(Actuated)												
(2+5)	Dwell	R	R	<G/G	G	R	R	R	DW	W/F		DW
	Clear to (2+6)	R	R	<Y/G	G	R	R	R	DW	DW		DW
	(3+8)	R	R	<Y/Y	Y	R	R	R	DW	DW		DW
	(4+8)	R	R	<Y/Y	Y	R	R	R	DW	DW		DW
	(PE1C)	R	R	<Y/Y	Y	R	R	R	DW	DW		DW
	(PE2C)	R	R	<G/G	G	R	R	R	DW	DW		DW
(Actuated)												
(2+6)	Dwell	G	G	G	G	R	R	R	W/F	W/F		DW
	Clear to (3+8)	Y	Y	Y	Y	R	R	R	DW	DW		DW
	(4+8)	Y	Y	Y	Y	R	R	R	DW	DW		DW
SW 8 St	(PE1C)	Y	Y	Y	Y	R	R	R	DW	DW		DW
	(PE2C)	Y	Y	Y	Y	R	R	R	DW	DW		DW
(Actuated)												
(3+8)	Dwell	R	R	R	R	<G/G	G/G>	R	DW	DW		DW
	Clear to (4+8)	R	R	R	R	<Y/G	G/G>	R	DW	DW		DW
	(1+5)	R	R	R	R	<Y/Y	Y/G>	R	DW	DW		DW
	(1+6)	R	R	R	R	<Y/Y	Y/G>	R	DW	DW		DW
	(2+5)	R	R	R	R	<Y/Y	Y/Y>	R	DW	DW		DW
	(2+6)	R	R	R	R	<Y/Y	Y/Y>	R	DW	DW		DW
	(PE1C)	R	R	R	R	<Y/Y	Y/Y>	R	DW	DW		DW
(Actuated)	(PE2C)	R	R	R	R	<Y/Y	Y/Y>	R	DW	DW		DW
(4+8)	Dwell	R	R	R	R	G	G	G	DW	DW		W/F
	Clear to (1+5)	R	R	R	R	Y	Y	Y	DW	DW		DW
	(1+6)	R	R	R	R	Y	Y	Y	DW	DW		DW
SW 70 Av	(2+5)	R	R	R	R	Y	Y	Y	DW	DW		DW
	(2+6)	R	R	R	R	Y	Y	Y	DW	DW		DW
	(PE1C)	R	R	R	R	Y	Y	Y	DW	DW		DW
	(PE2C)	R	R	R	R	Y	Y	Y	DW	DW		DW
(Actuated)												
	Dwell											
	Clear to											
	Dwell											
	Clear to											
Flashing Operation		FY	FY	FY	FY	FR	FR	FR				

Movements/Display/Actuation

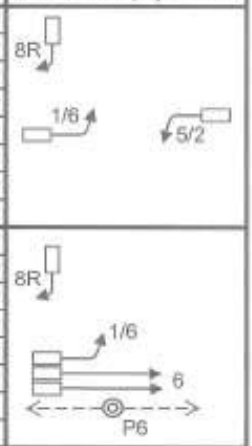

Miami-Dade County Public Works Department

Drawn Radames Iribar RI	Date 1/5/2016	SW 70 Av & SW 8 St		
Checked	Date 2/3/17	Placed in Service	Phasing No.	Asset Number
		Date 2/8/2017 By SSC	3	6944

SIGNAL OPERATING PLAN

N

	Direction	EB		WB		SB		NB	Ped Heads			
Timing Phases	Head No.	1/6	6	5/2	2	3/8	8R	4	P6	P2		P4
(PE1C)	Dwell	<G/G	G	R	R	R	R	R	DW	DW		DW
Track Clearance	Clearance (PE1D1)	<Y/Y	Y	R	R	R	R	R	DW	DW		DW
(Actuated)												
(PE1D1)	Dwell	R	R	R	R	G	G	G	DW	DW		DW
Dwell1	Clearance (PE1D2)	R	R	R	R	Y	Y	Y	DW	DW		DW
	Clearance (PER)	R	R	R	R	Y	Y	Y	DW	DW		DW
(Actuated)												
(PE1D2)	Dwell	R	R	<G/R	R	R	R	R				
Dwell2	Clearance (PE1D1)	R	R	<Y/R	R	R	R	R				
	Clearance (PER)	R	R	<Y/R	R	R	R	R				
(Actuated)												
(PE2C)	Dwell	R	R	<G/G	G	R	R	R	DW	DW		DW
Track Clearance	Clearance (PE2D1)	R	R	<Y/Y	Y	R	R	R	DW	DW		DW
									DW	DW		DW
(Actuated)												
(PE2D1)	Dwell	R	R	R	R	G	G	G	DW	DW		DW
Dwell	Clearance (PED2)	R	R	R	R	Y	Y	Y	DW	DW		DW
	Clearance (PER)	R	R	R	R	Y	Y	Y	DW	DW		DW
(Actuated)												
(PE2D2)	Dwell	<G/G	R	R	R	R	R	R	DW	DW		DW
Dwell	Clearance (PED1)	<Y/Y	R	R	R	R	R	R	DW	DW		DW
	Clearance (PER)	<Y/Y	R	R	R	R	R	R	DW	DW		DW
(Actuated)												
(PER)	Dwell	G	G	G	G	R	R	R	W/F	W/F		DW
Recovery	Clearance (2+6)	G	G	G	G	R	R	R	DW	DW		DW
(Actuated)												
	Dwell											
	Clearance											
Flashing Operation		FY	FY	FY	FY	FR	FR	FR				

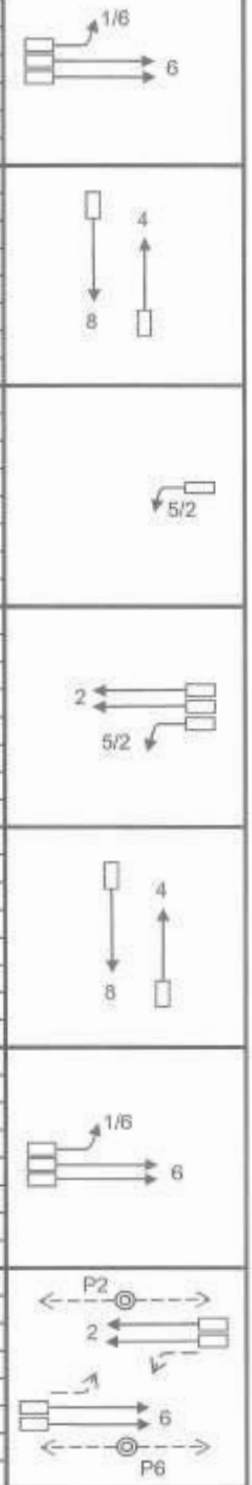

Page 2 of 2

Miami-Dade County Public Works Department

Drawn Radames Iribar RI	Date 1/5/2016	SW 70 Av & SW 8 St		
Checked	Date 2/3/17	Placed in Service Date 2/8/2017 By SSL	Phasing No. 3	Asset Number 6944

TOD Schedule Report

for 6944: SW 70 Av&SW 8 St

Print Date: 4/25/2018

Print Time: 2:10 AM

Asset	Intersection	TOD Schedule	Op Mode	Plan #	Cycle	Offset	TOD Setting	Active PhaseBank	Active Maximum
6944	SW 70 Av&SW 8 St	DOW-4		N/A	0	0	N/A	0	Max 0

Splits

PH 1	PH 2	PH 3	PH 4	PH 5	PH 6	PH 7	PH 8
EBL	WBT	SBL	NBT	WBL	EBT	-	SBT
0	0	0	0	0	0	0	0

Active Phase Bank: Phase Bank 1

Phase	Walk (Phase Bank 1 / 2 / 3)	Don't Walk (1 / 2 / 3)	Min Initial (1 / 2 / 3)	Veh Ext (1 / 2 / 3)	Max Limit (1 / 2 / 3)	Max 2 (1 / 2 / 3)	Yellow	Red
1 EBL	0 - 0 - 0	0 - 0 - 0	5 - 5 - 5	3 - 3 - 1	24 - 15 - 15	25 - 24 - 24	4	2
2 WBT	5 - 5 - 5	18 - 18 - 18	7 - 7 - 7	1 - 1 - 1	50 - 35 - 35	0 - 40 - 40	4	2
3 SBL	0 - 0 - 0	0 - 0 - 0	5 - 5 - 5	3 - 3 - 1	25 - 15 - 15	30 - 25 - 25	4	2
4 NBT	5 - 5 - 5	13 - 13 - 13	7 - 7 - 7	2.5 - 2.5 - 1	35 - 30 - 30	55 - 55 - 55	4	2
5 WBL	0 - 0 - 0	0 - 0 - 0	5 - 5 - 5	3 - 3 - 1	24 - 15 - 15	25 - 24 - 24	4	2
6 EBT	5 - 5 - 5	18 - 18 - 18	7 - 7 - 7	1 - 1 - 1	50 - 35 - 35	0 - 40 - 40	4	2
7 -	0 - 0 - 0	0 - 0 - 0	0 - 0 - 0	0 - 0 - 0	0 - 0 - 0	0 - 0 - 0	0	0
8 SBT	0 - 0 - 0	0 - 0 - 0	7 - 7 - 7	2.5 - 2.5 - 1	35 - 30 - 30	55 - 55 - 55	4	2

Last In Service Date: unknown

Permitted Phases

	12345678
Default	123456-8
External Permit 0	--------
External Permit 1	-2-4-6-8
External Permit 2	-2-4-6-8

TOD Schedule Report

for 6944: SW 70 Av&SW 8 St

Print Date: 4/25/2018

Print Time: 2:10 AM

Current TOD Schedule	Plan	Cycle	Green Time 1 EBL	2 WBT	3 SBL	4 NBT	5 WBL	6 EBT	7 -	8 SBT	Ring Offset	Offset
	2	160	11	94	7	24	6	99	0	37	0	135
	4	190	11	129	6	20	8	132	0	31	0	41
	7	160	11	85	12	28	8	88	0	46	0	71
	9	160	11	85	12	28	8	88	0	46	0	45
	11	170	7	108	8	23	12	103	0	37	0	99
	12	190	7	133	6	20	7	133	0	31	0	103
	13	160	11	85	12	28	8	88	0	46	0	15
	14	140	8	80	7	21	7	81	0	34	0	63
	15	120	7	60	9	20	7	60	0	35	0	63
	17	120	7	60	9	20	7	60	0	35	0	63
	18	130	7	65	9	25	7	65	0	40	0	48
	20	150	7	85	9	25	7	85	0	40	0	32
	21	160	7	95	9	25	7	95	0	40	0	32
	22	130	7	65	9	25	7	65	0	40	0	31
	23	120	7	60	9	20	7	60	0	35	0	63
	24	120	7	60	9	20	7	60	0	35	0	63
	27	130	7	65	9	25	7	65	0	40	0	23

Local TOD Schedule

Time	Plan	DOW
0000	17	M T W Th F
0000	23	Su S
0115	Free	M T W Th F
0130	24	Su S
0215	Free	Su S
0500	Free	M T W Th F
0545	2	M T W Th F
0615	18	Su S
0645	4	M T W Th F
1000	7	M T W Th F
1000	20	Su S
1130	9	M T W Th F
1500	11	M T W Th F
1500	21	Su S
1630	12	M T W Th F
2000	13	M T W Th F
2100	22	Su S
2130	14	M T W Th F
2300	15	M T W Th F

Current Time of Day Function

Time	Function	Settings *	Day of Week
0000	TOD OUTPUTS	--------	SuM T W ThF S

Local Time of Day Function

Time	Function	Settings *	Day of Week
0000	TOD OUTPUTS	--------	SuM T W ThF S

* Settings

Blank - FREE - Phase Bank 1, Max 1
Blank - Plan - Phase Bank 1, Max 2
1 - Phase Bank 2, Max 1
2 - Phase Bank 2, Max 2
3 - Phase Bank 3, Max 1
4 - Phase Bank 3, Max 2
5 - EXTERNAL PERMIT 1
6 - EXTERNAL PERMIT 2
7 - X-PED OMIT
8 - TBA

No Calendar Defined/Enabled

SIGNAL OPERATING PLAN

N

Phase	Direction / Head No.	EB 6	WB 5/2 2	SB 0	NB 4	Ped Heads P6	P2	P8	P4	Drawing
	Dwell									
	Clear									
	Dwell									
	Clear									
(2+5) WB	Dwell	R	<G/G G	R	R	DW	W/F	DW	DW	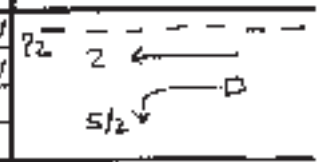
	Clear (2+6)	R	<Y/G G	R	R	DW	DW	DW	DW	
(Actuated)										
(2+6) E/W W. Flagler	Dwell	G	G G	R	R	W/F	W/F	DW	DW	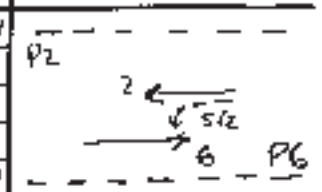
	Clear									
(Recall)	(4+8)	Y	Y Y	R	R	DW	DW	DW	DW	
(4+8) N/S 69 Av	Dwell	R	R R	G	G	DW	DW	W/F	W/F	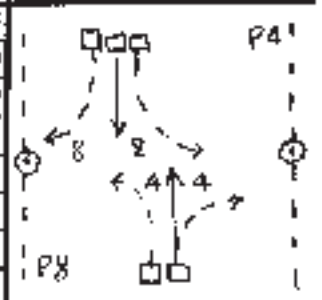
	Clear (2+6)	R	R R	Y	Y	DW	DW	DW	DW	
	Clear (2+5)	R	R R	Y	Y	DW	DW	DW	DW	
(Actuated)										
Pre-emption Clearance	Dwell	G	R R	R	R					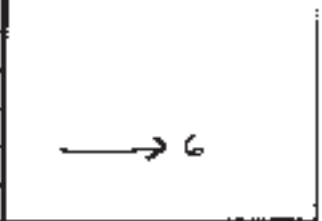
	Clear PE1									
	Clear PE2									
PE1 N/S	Dwell	R	R R	G	G					
	Clear PE2	R	R R	Y	Y					
	Clear Recov. (2+6)	R	R R	Y	Y					
(Actuated)										
PE2 WL	Dwell	R	R/<G R	R	R					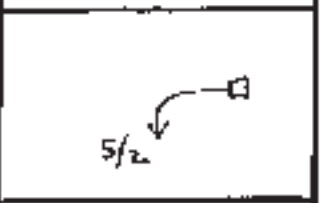
	Clear PE1	R	R/<Y R	R	R					
	Clear Recov. (2+6)	R	R/<Y R	R	R					
(Actuated)										
Flashing Operation		FY	FY FY	FR	FR					Page 1 of 1

Miami-Dade County Public Works Department

Drawn	Date				
H. Hernandez	2/4/2002	W Flagler St & 69 Av			
Checked	Date	Placed in Service		Phasing No.	Asset Number
	2/4/02	Date 2/5/02	By TCD	5	4296

HlyQuadPPMan\ConcPads

TOD Schedule Report

for 4296: Flagler St W&W 69 Av

Print Date: 5/22/2018

Print Time: 2:38 PM

Asset	Intersection	TOD Schedule	Op Mode	Plan #	Cycle	Offset	TOD Setting	Active PhaseBank	Active Maximum
4296	Flagler St W&W 69 Av	DOW-3		N/A	0	0	N/A	0	Max 0

Splits

PH 1	PH 2	PH 3	PH 4	PH 5	PH 6	PH 7	PH 8
-	WBT	-	NBT	WBL	EBT	-	SBT
0	0	0	0	0	0	0	0

Active Phase Bank: Phase Bank 1

Phase	Walk (Phase Bank 1 / 2 / 3)	Don't Walk (1 / 2 / 3)	Min Initial (1 / 2 / 3)	Veh Ext (1 / 2 / 3)	Max Limit (1 / 2 / 3)	Max 2 (1 / 2 / 3)	Yellow	Red
1 -	0 - 0 - 0	0 - 0 - 0	0 - 0 - 0	0 - 0 - 0	0 - 0 - 0	0 - 0 - 0	0	0
2 WBT	7 - 7 - 7	16 - 16 - 16	7 - 7 - 7	1 - 1 - 1	40 - 40 - 40	0 - 40 - 40	4.4	2
3 -	0 - 0 - 0	0 - 0 - 0	0 - 0 - 0	0 - 0 - 0	0 - 0 - 0	0 - 0 - 0	0	0
4 NBT	7 - 7 - 7	15 - 15 - 15	7 - 7 - 7	2.5 - 2.5 - 2.5	14 - 14 - 14	44 - 27 - 27	4	2
5 WBL	0 - 0 - 0	0 - 0 - 0	5 - 5 - 5	2 - 2 - 2	5 - 5 - 5	10 - 6 - 6	4	2
6 EBT	7 - 7 - 7	16 - 16 - 16	7 - 7 - 7	1 - 1 - 1	40 - 40 - 40	0 - 40 - 40	4.4	2
7 -	0 - 0 - 0	0 - 0 - 0	0 - 0 - 0	0 - 0 - 0	0 - 0 - 0	0 - 0 - 0	0	0
8 SBT	7 - 7 - 7	15 - 15 - 15	7 - 7 - 7	2.5 - 2.5 - 2.5	14 - 14 - 14	44 - 27 - 27	4	2

Last In Service Date: unknown

Permitted Phases

	12345678
Default	-2-456-8
External Permit 0	-2-4-6-8
External Permit 1	-2-4-6-8
External Permit 2	-2-4-6-8

TOD Schedule Report

for 4296: Flagler St W&W 69 Av

Print Date: 5/22/2018

Print Time: 2:38 PM

Current TOD Schedule	Plan	Cycle	Green Time 1 -	2 WBT	3 -	4 NBT	5 WBL	6 EBT	7 -	8 SBT	Ring Offset	Offset
	3	120	0	86	0	22	8	72	0	22	0	34
	4	180	0	128	0	40	6	116	0	40	0	58
	5	150	0	117	0	21	7	104	0	21	0	71
	6	160	0	113	0	35	8	99	0	35	0	37
	8	150	0	105	0	33	8	91	0	33	0	109
	10	180	0	134	0	34	8	120	0	34	0	17
	14	150	0	110	0	28	6	98	0	28	0	36
	15	120	0	84	0	24	7	71	0	21	0	48
	17	100	0	66	0	22	8	52	0	22	0	64
	18	100	0	66	0	22	8	52	0	22	0	45
	20	120	0	83	0	25	8	69	0	25	0	65
	21	150	0	104	0	34	8	90	0	34	0	76
	22	100	0	63	0	25	7	50	0	25	0	85

Local TOD Schedule

Time	Plan	DOW
0000	Free	M T W Th F
0000	22	Su S
0100	Free	Su S
0130	Flash	M T W Th F
0200	Flash	Su S
0500	3	M T W Th F
0600	4	M T W Th F
0600	18	Su S
0730	20	Su S
0930	5	M T W Th F
1100	6	M T W Th F
1345	8	M T W Th F
1530	10	M T W Th F
1630	21	Su S
2030	22	Su S
2030	14	M T W Th F
2130	15	M T W Th F
2200	17	M T W Th F

Current Time of Day Function

Time	Function	Settings *	Day of Week
0000	TOD OUTPUTS	--------	SuM T W ThF S

Local Time of Day Function

Time	Function	Settings *	Day of Week
0000	TOD OUTPUTS	--------	SuM T W ThF S

* Settings

Blank - FREE - Phase Bank 1, Max 1
Blank - Plan - Phase Bank 1, Max 2
1 - Phase Bank 2, Max 1
2 - Phase Bank 2, Max 2
3 - Phase Bank 3, Max 1
4 - Phase Bank 3, Max 2
5 - EXTERNAL PERMIT 1
6 - EXTERNAL PERMIT 2
7 - X-PED OMIT
8 - TBA

No Calendar Defined/Enabled

Appendix H – Microsimulation Analysis

Synchro Inputs – Existing Condition – AM

Lane Group	EBL	EBT	EBR	WBL	WBT	WBR	NBL	NBT	NBR	SBL	SBT	SBR
Lane Configurations												
Traffic Volume (vph)	11	1616	64	19	1263	3	97	84	15	5	33	144
Future Volume (vph)	11	1616	64	19	1263	3	97	84	15	5	33	144
Ideal Flow (vphpl)	1900	1900	1900	1900	1900	1900	1900	1900	1900	1900	1900	1900
Storage Length (ft)	0		0	110		0	120		0	80		0
Storage Lanes	0		0	1		0	1		0	1		1
Taper Length (ft)	25			25			25			25		
Lane Util. Factor	0.95	0.95	0.95	1.00	0.95	0.95	1.00	1.00	1.00	1.00	1.00	1.00
Ped Bike Factor		1.00			1.00		1.00					0.98
Frt		0.994						0.977				0.850
Flt Protected				0.950			0.950			0.950		
Satd. Flow (prot)	0	3518	0	1752	3505	0	1719	1768	0	1770	1863	1583
Flt Permitted		0.936		0.056			0.734			0.645		
Satd. Flow (perm)	0	3293	0	103	3505	0	1322	1768	0	1201	1863	1557
Right Turn on Red			Yes			Yes			Yes			Yes
Satd. Flow (RTOR)		4						5				90
Link Speed (mph)		30			30			30			30	
Link Distance (ft)		171			3106			1344			634	
Travel Time (s)		3.9			70.6			30.5			14.4	
Confl. Peds. (#/hr)	1					1	2					2
Peak Hour Factor	0.95	0.95	0.95	0.95	0.95	0.95	0.95	0.95	0.95	0.95	0.95	0.95
Heavy Vehicles (%)	2%	2%	2%	3%	3%	3%	5%	5%	5%	2%	2%	2%
Adj. Flow (vph)	12	1701	67	20	1329	3	102	88	16	5	35	152
Shared Lane Traffic (%)												
Lane Group Flow (vph)	0	1780	0	20	1332	0	102	104	0	5	35	152
Enter Blocked Intersection	No	No	No	No	No	No	No	No	No	No	No	No
Lane Alignment	Left	Left	Right	Left	Left	Right	Left	Left	Right	Left	Left	Right
Median Width(ft)		12			12			12			12	
Link Offset(ft)		0			0			0			0	
Crosswalk Width(ft)		16			16			16			16	
Two way Left Turn Lane												
Headway Factor	1.00	1.00	1.00	1.00	1.00	1.00	1.00	1.00	1.00	1.00	1.00	1.00
Turning Speed (mph)	15		9	15		9	15		9	15		9
Number of Detectors	1	2		1	2		1	2		1	2	1
Detector Template	Left	Thru		Left	Thru		Left	Thru		Left	Thru	Right
Leading Detector (ft)	20	100		20	100		20	100		20	100	20
Trailing Detector (ft)	0	0		0	0		0	0		0	0	0
Detector 1 Position(ft)	0	0		0	0		0	0		0	0	0
Detector 1 Size(ft)	20	6		20	6		20	6		20	6	20
Detector 1 Type	Cl+Ex	Cl+Ex		Cl+Ex	Cl+Ex		Cl+Ex	Cl+Ex		Cl+Ex	Cl+Ex	Cl+Ex
Detector 1 Channel												
Detector 1 Extend (s)	0.0	0.0		0.0	0.0		0.0	0.0		0.0	0.0	0.0
Detector 1 Queue (s)	0.0	0.0		0.0	0.0		0.0	0.0		0.0	0.0	0.0
Detector 1 Delay (s)	0.0	0.0		0.0	0.0		0.0	0.0		0.0	0.0	0.0
Detector 2 Position(ft)		94			94			94			94	
Detector 2 Size(ft)		6			6			6			6	
Detector 2 Type		Cl+Ex			Cl+Ex			Cl+Ex			Cl+Ex	
Detector 2 Channel												
Detector 2 Extend (s)		0.0			0.0			0.0			0.0	

Lane Group	EBL	EBT	EBR	WBL	WBT	WBR	NBL	NBT	NBR	SBL	SBT	SBR
Turn Type	Perm	NA		pm+pt	NA		Perm	NA		Perm	NA	Perm
Protected Phases		6		5	2			4			8	
Permitted Phases	6			2			4			8		8
Detector Phase	6	6		5	2		4	4		8	8	8
Switch Phase												
Minimum Initial (s)	7.0	7.0		5.0	7.0		7.0	7.0		7.0	7.0	7.0
Minimum Split (s)	29.4	29.4		11.0	29.4		28.0	28.0		28.0	28.0	28.0
Total Split (s)	122.0	122.0		12.0	134.0		46.0	46.0		46.0	46.0	46.0
Total Split (%)	67.8%	67.8%		6.7%	74.4%		25.6%	25.6%		25.6%	25.6%	25.6%
Maximum Green (s)	115.6	115.6		6.0	127.6		40.0	40.0		40.0	40.0	40.0
Yellow Time (s)	4.4	4.4		4.0	4.4		4.0	4.0		4.0	4.0	4.0
All-Red Time (s)	2.0	2.0		2.0	2.0		2.0	2.0		2.0	2.0	2.0
Lost Time Adjust (s)		0.0		0.0	0.0		0.0	0.0		0.0	0.0	0.0
Total Lost Time (s)		6.4		6.0	6.4		6.0	6.0		6.0	6.0	6.0
Lead/Lag	Lag	Lag		Lead								
Lead-Lag Optimize?	Yes	Yes		Yes								
Vehicle Extension (s)	1.0	1.0		2.0	1.0		2.5	2.5		2.5	2.5	2.5
Recall Mode	None	None		Max	C-Min		Max	Max		Max	Max	Max
Walk Time (s)	7.0	7.0			7.0		7.0	7.0		7.0	7.0	7.0
Flash Dont Walk (s)	16.0	16.0			16.0		15.0	15.0		15.0	15.0	15.0
Pedestrian Calls (#/hr)	0	0			0		0	0		0	0	0
Act Effct Green (s)		115.6		128.0	127.6		40.0	40.0		40.0	40.0	40.0
Actuated g/C Ratio		0.64		0.71	0.71		0.22	0.22		0.22	0.22	0.22
v/c Ratio		0.84		0.16	0.54		0.35	0.26		0.02	0.08	0.37
Control Delay		29.8		10.3	13.3		63.0	57.1		55.2	56.3	26.9
Queue Delay		0.0		0.0	0.0		0.0	0.0		0.0	0.0	0.0
Total Delay		29.8		10.3	13.3		63.0	57.1		55.2	56.3	26.9
LOS		C		B	B		E	E		E	E	C
Approach Delay		29.8			13.2			60.0			33.0	
Approach LOS		C			B			E			C	

Intersection Summary	
Area Type: Other	
Cycle Length: 180	
Actuated Cycle Length: 180	
Offset: 58 (32%), Referenced to phase 2:WBTL, Start of Yellow	
Natural Cycle: 90	
Control Type: Actuated-Coordinated	
Maximum v/c Ratio: 0.84	
Intersection Signal Delay: 25.4	Intersection LOS: C
Intersection Capacity Utilization 83.1%	ICU Level of Service E
Analysis Period (min) 15	

Splits and Phases: 1: SW 69th Ave/NW 69th Ave & W Flagler St

Lane Group	EBL	EBT	WBT	WBR	SBL	SBR
Lane Configurations						
Traffic Volume (vph)	9	1720	1468	7	1	2
Future Volume (vph)	9	1720	1468	7	1	2
Ideal Flow (vphpl)	1900	1900	1900	1900	1900	1900
Storage Length (ft)	125			0	0	0
Storage Lanes	1			0	1	0
Taper Length (ft)	25				25	
Lane Util. Factor	1.00	0.95	0.95	0.95	1.00	1.00
Ped Bike Factor						
Frt			0.999		0.910	
Flt Protected	0.950				0.984	
Satd. Flow (prot)	1787	3574	3571	0	1684	0
Flt Permitted	0.950				0.984	
Satd. Flow (perm)	1787	3574	3571	0	1684	0
Link Speed (mph)		30	30		30	
Link Distance (ft)		2193	130		251	
Travel Time (s)		49.8	3.0		5.7	
Confl. Peds. (#/hr)	10					
Peak Hour Factor	0.97	0.97	0.97	0.97	0.97	0.97
Heavy Vehicles (%)	1%	1%	1%	1%	1%	1%
Adj. Flow (vph)	9	1773	1513	7	1	2
Shared Lane Traffic (%)						
Lane Group Flow (vph)	9	1773	1520	0	3	0
Enter Blocked Intersection	No	No	No	No	No	No
Lane Alignment	Left	Left	Left	Right	Left	Right
Median Width(ft)		12	12		12	
Link Offset(ft)		0	0		0	
Crosswalk Width(ft)		16	16		16	
Two way Left Turn Lane						
Headway Factor	1.00	1.00	1.00	1.00	1.00	1.00
Turning Speed (mph)	15			9	15	9
Sign Control		Free	Free		Stop	

Intersection Summary	
Area Type:	Other
Control Type: Unsignalized	
Intersection Capacity Utilization 57.5%	ICU Level of Service B
Analysis Period (min) 15	

Lane Group	EBL	EBT	EBR	WBL	WBT	WBR	NBL	NBT	NBR	SBL	SBT	SBR
Lane Configurations												
Traffic Volume (vph)	40	380	58	5	190	9	36	97	10	16	54	33
Future Volume (vph)	40	380	58	5	190	9	36	97	10	16	54	33
Ideal Flow (vphpl)	1900	1900	1900	1900	1900	1900	1900	1900	1900	1900	1900	1900
Lane Util. Factor	1.00	1.00	1.00	1.00	1.00	1.00	1.00	1.00	1.00	1.00	1.00	1.00
Ped Bike Factor												
Frt		0.984			0.994			0.990			0.957	
Flt Protected		0.996			0.999			0.987			0.992	
Satd. Flow (prot)	0	1791	0	0	1850	0	0	1802	0	0	1702	0
Flt Permitted		0.996			0.999			0.987			0.992	
Satd. Flow (perm)	0	1791	0	0	1850	0	0	1802	0	0	1702	0
Link Speed (mph)		30			30			30			30	
Link Distance (ft)		175			3048			1367			1344	
Travel Time (s)		4.0			69.3			31.1			30.5	
Confl. Peds. (#/hr)	1					1	2					2
Peak Hour Factor	0.93	0.93	0.93	0.93	0.93	0.93	0.93	0.93	0.93	0.93	0.93	0.93
Heavy Vehicles (%)	4%	4%	4%	2%	2%	2%	3%	3%	3%	6%	6%	6%
Adj. Flow (vph)	43	409	62	5	204	10	39	104	11	17	58	35
Shared Lane Traffic (%)												
Lane Group Flow (vph)	0	514	0	0	219	0	0	154	0	0	110	0
Enter Blocked Intersection	No	No	No	No	No	No	No	No	No	No	No	No
Lane Alignment	Left	Left	Right	Left	Left	Right	Left	Left	Right	Left	Left	Right
Median Width(ft)		0			0			12			12	
Link Offset(ft)		0			0			0			0	
Crosswalk Width(ft)		16			16			16			16	
Two way Left Turn Lane												
Headway Factor	1.00	1.00	1.00	1.00	1.00	1.00	1.00	1.00	1.00	1.00	1.00	1.00
Turning Speed (mph)	15		9	15		9	15		9	15		9
Sign Control		Stop			Stop			Stop			Stop	

Intersection Summary	
Area Type:	Other
Control Type: Unsignalized	
Intersection Capacity Utilization 59.1%	ICU Level of Service B
Analysis Period (min) 15	

Lane Group	EBL	EBT	EBR	WBL	WBT	WBR	NBL	NBT	NBR	SBL	SBT	SBR
Lane Configurations												
Traffic Volume (vph)	32	1755	26	30	1342	42	66	6	53	53	5	21
Future Volume (vph)	32	1755	26	30	1342	42	66	6	53	53	5	21
Ideal Flow (vphpl)	1900	1900	1900	1900	1900	1900	1900	1900	1900	1900	1900	1900
Storage Length (ft)	100		0	45		0	0		0	0		0
Storage Lanes	1		0	1		0	0		0	0		1
Taper Length (ft)	25			25			25			25		
Lane Util. Factor	1.00	0.95	0.95	1.00	0.95	0.95	1.00	1.00	1.00	1.00	1.00	1.00
Ped Bike Factor		1.00			1.00			0.99				
Frt		0.998			0.995			0.943				0.850
Flt Protected	0.950			0.950				0.974			0.956	
Satd. Flow (prot)	1787	3566	0	1770	3516	0	0	1683	0	0	1763	1568
Flt Permitted	0.132			0.070				0.803			0.581	
Satd. Flow (perm)	248	3566	0	130	3516	0	0	1388	0	0	1072	1568
Right Turn on Red			Yes			Yes			Yes			Yes
Satd. Flow (RTOR)		2			4			16				21
Link Speed (mph)		30			30			30			30	
Link Distance (ft)		3163			226			1301			124	
Travel Time (s)		71.9			5.1			29.6			2.8	
Confl. Peds. (#/hr)	7		2	2		7			1	1		
Peak Hour Factor	0.98	0.98	0.98	0.98	0.98	0.98	0.98	0.98	0.98	0.98	0.98	0.98
Heavy Vehicles (%)	1%	1%	1%	2%	2%	2%	3%	3%	3%	3%	3%	3%
Adj. Flow (vph)	33	1791	27	31	1369	43	67	6	54	54	5	21
Shared Lane Traffic (%)												
Lane Group Flow (vph)	33	1818	0	31	1412	0	0	127	0	0	59	21
Enter Blocked Intersection	No	No	No	No	No	No	No	No	No	No	No	No
Lane Alignment	Left	Left	Right	Left	Left	Right	Left	Left	Right	Left	Left	Right
Median Width(ft)		12			12			0			0	
Link Offset(ft)		0			0			0			0	
Crosswalk Width(ft)		16			16			16			16	
Two way Left Turn Lane												
Headway Factor	1.00	1.00	1.00	1.00	1.00	1.00	1.00	1.00	1.00	1.00	1.00	1.00
Turning Speed (mph)	15		9	15		9	15		9	15		9
Number of Detectors	1	2		1	2		1	2		1	2	1
Detector Template	Left	Thru		Left	Thru		Left	Thru		Left	Thru	Right
Leading Detector (ft)	20	100		20	100		20	100		20	100	20
Trailing Detector (ft)	0	0		0	0		0	0		0	0	0
Detector 1 Position(ft)	0	0		0	0		0	0		0	0	0
Detector 1 Size(ft)	20	6		20	6		20	6		20	6	20
Detector 1 Type	Cl+Ex	Cl+Ex		Cl+Ex	Cl+Ex		Cl+Ex	Cl+Ex		Cl+Ex	Cl+Ex	Cl+Ex
Detector 1 Channel												
Detector 1 Extend (s)	0.0	0.0		0.0	0.0		0.0	0.0		0.0	0.0	0.0
Detector 1 Queue (s)	0.0	0.0		0.0	0.0		0.0	0.0		0.0	0.0	0.0
Detector 1 Delay (s)	0.0	0.0		0.0	0.0		0.0	0.0		0.0	0.0	0.0
Detector 2 Position(ft)		94			94			94			94	
Detector 2 Size(ft)		6			6			6			6	
Detector 2 Type		Cl+Ex			Cl+Ex			Cl+Ex			Cl+Ex	
Detector 2 Channel												
Detector 2 Extend (s)		0.0			0.0			0.0			0.0	

Lane Group	EBL	EBT	EBR	WBL	WBT	WBR	NBL	NBT	NBR	SBL	SBT	SBR
Turn Type	pm+pt	NA		pm+pt	NA		Perm	NA		pm+pt	NA	pm+ov
Protected Phases	1	6		5	2			4		3	8	1
Permitted Phases	6			2			4			8		8
Detector Phase	1	6		5	2		4	4		3	8	1
Switch Phase												
Minimum Initial (s)	5.0	7.0		5.0	7.0		7.0	7.0		5.0	7.0	5.0
Minimum Split (s)	11.0	29.0		11.0	29.0		24.0	24.0		11.0	13.0	11.0
Total Split (s)	17.0	138.0		14.0	135.0		26.0	26.0		12.0	38.0	17.0
Total Split (%)	8.9%	72.6%		7.4%	71.1%		13.7%	13.7%		6.3%	20.0%	8.9%
Maximum Green (s)	11.0	132.0		8.0	129.0		20.0	20.0		6.0	32.0	11.0
Yellow Time (s)	4.0	4.0		4.0	4.0		4.0	4.0		4.0	4.0	4.0
All-Red Time (s)	2.0	2.0		2.0	2.0		2.0	2.0		2.0	2.0	2.0
Lost Time Adjust (s)	0.0	0.0		0.0	0.0			0.0			0.0	0.0
Total Lost Time (s)	6.0	6.0		6.0	6.0			6.0			6.0	6.0
Lead/Lag	Lead	Lag		Lead	Lag		Lag	Lag		Lead		Lead
Lead-Lag Optimize?	Yes	Yes		Yes	Yes		Yes	Yes		Yes		Yes
Vehicle Extension (s)	3.0	1.0		3.0	1.0		2.5	2.5		3.0	2.5	3.0
Recall Mode	Max	C-Min		Max	C-Min		Max	Max		Max	Max	Max
Walk Time (s)		5.0			5.0		5.0	5.0				
Flash Dont Walk (s)		18.0			18.0		13.0	13.0				
Pedestrian Calls (#/hr)		0			0		0	0				
Act Effct Green (s)	143.0	132.0		137.0	129.0			20.0			32.0	49.0
Actuated g/C Ratio	0.75	0.69		0.72	0.68			0.11			0.17	0.26
v/c Ratio	0.12	0.73		0.19	0.59			0.79			0.29	0.05
Control Delay	6.2	20.3		8.2	17.6			103.7			72.4	17.6
Queue Delay	0.0	0.0		0.0	0.0			0.0			0.0	0.0
Total Delay	6.2	20.3		8.2	17.6			103.7			72.4	17.6
LOS	A	C		A	B			F			E	B
Approach Delay		20.0			17.4			103.7			58.0	
Approach LOS		C			B			F			E	

Intersection Summary	
Area Type:	Other
Cycle Length: 190	
Actuated Cycle Length: 190	
Offset: 41 (22%), Referenced to phase 2:WBTL and 6:EBTL, Start of Yellow	
Natural Cycle: 100	
Control Type: Actuated-Coordinated	
Maximum v/c Ratio: 0.79	
Intersection Signal Delay: 22.8	Intersection LOS: C
Intersection Capacity Utilization 74.3%	ICU Level of Service D
Analysis Period (min) 15	

Splits and Phases: 4: SW 70th Ave & SW 8th St

Lane Group	EBL	EBT	EBR	WBL	WBT	WBR	NBL	NBT	NBR	SBL	SBT	SBR
Lane Configurations												
Traffic Volume (vph)	77	1613	12	9	1352	21	10	5	16	12	0	82
Future Volume (vph)	77	1613	12	9	1352	21	10	5	16	12	0	82
Ideal Flow (vphpl)	1900	1900	1900	1900	1900	1900	1900	1900	1900	1900	1900	1900
Storage Length (ft)	0		0	50		0	0		0	150		0
Storage Lanes	1		0	1		0	0		0	1		0
Taper Length (ft)	25			25			25			25		
Lane Util. Factor	1.00	0.95	0.95	1.00	0.95	0.95	1.00	1.00	1.00	1.00	1.00	1.00
Ped Bike Factor												
Frt		0.999			0.998			0.930			0.850	
Flt Protected	0.950			0.950				0.984		0.950		
Satd. Flow (prot)	1770	3536	0	1770	3532	0	0	1672	0	1736	1553	0
Flt Permitted	0.950			0.950				0.984		0.950		
Satd. Flow (perm)	1770	3536	0	1770	3532	0	0	1672	0	1736	1553	0
Link Speed (mph)		30			30			30			30	
Link Distance (ft)		172			4245			1304			1367	
Travel Time (s)		3.9			96.5			29.6			31.1	
Confl. Peds. (#/hr)	2		2	2		2	2		1	1		2
Peak Hour Factor	0.98	0.98	0.98	0.98	0.98	0.98	0.98	0.98	0.98	0.98	0.98	0.98
Heavy Vehicles (%)	2%	2%	2%	2%	2%	2%	4%	4%	4%	4%	4%	4%
Adj. Flow (vph)	79	1646	12	9	1380	21	10	5	16	12	0	84
Shared Lane Traffic (%)												
Lane Group Flow (vph)	79	1658	0	9	1401	0	0	31	0	12	84	0
Enter Blocked Intersection	No	No	No	No	No	No	No	No	No	No	No	No
Lane Alignment	Left	Left	Right	Left	Left	Right	Left	Left	Right	Left	Left	Right
Median Width(ft)		12			12			12			12	
Link Offset(ft)		0			0			0			0	
Crosswalk Width(ft)		16			16			16			16	
Two way Left Turn Lane												
Headway Factor	1.00	1.00	1.00	1.00	1.00	1.00	1.00	1.00	1.00	1.00	1.00	1.00
Turning Speed (mph)	15		9	15		9	15		9	15		9
Sign Control		Free			Free			Stop			Stop	

Intersection Summary	
Area Type:	Other
Control Type: Unsignalized	
Intersection Capacity Utilization 67.0%	ICU Level of Service C
Analysis Period (min) 15	

Lane Group	EBL	EBT	EBR	WBL	WBT	WBR	NBL	NBT	NBR	SBL	SBT	SBR
Lane Configurations												
Traffic Volume (vph)	19	122	15	5	111	8	25	19	9	6	8	18
Future Volume (vph)	19	122	15	5	111	8	25	19	9	6	8	18
Ideal Flow (vphpl)	1900	1900	1900	1900	1900	1900	1900	1900	1900	1900	1900	1900
Lane Util. Factor	1.00	1.00	1.00	1.00	1.00	1.00	1.00	1.00	1.00	1.00	1.00	1.00
Ped Bike Factor												
Frt		0.987			0.991			0.977			0.925	
Flt Protected		0.994			0.998			0.977			0.991	
Satd. Flow (prot)	0	1810	0	0	1842	0	0	1778	0	0	1628	0
Flt Permitted		0.994			0.998			0.977			0.991	
Satd. Flow (perm)	0	1810	0	0	1842	0	0	1778	0	0	1628	0
Link Speed (mph)		30			30			30			30	
Link Distance (ft)		1218			191			1295			1301	
Travel Time (s)		27.7			4.3			29.4			29.6	
Confl. Peds. (#/hr)	1		3	3		1			1	1		
Peak Hour Factor	0.84	0.84	0.84	0.84	0.84	0.84	0.84	0.84	0.84	0.84	0.84	0.84
Heavy Vehicles (%)	3%	3%	3%	2%	2%	2%	2%	2%	2%	7%	7%	7%
Adj. Flow (vph)	23	145	18	6	132	10	30	23	11	7	10	21
Shared Lane Traffic (%)												
Lane Group Flow (vph)	0	186	0	0	148	0	0	64	0	0	38	0
Enter Blocked Intersection	No	No	No	No	No	No	No	No	No	No	No	No
Lane Alignment	Left	Left	Right	Left	Left	Right	Left	Left	Right	Left	Left	Right
Median Width(ft)		0			0			0			0	
Link Offset(ft)		0			0			0			0	
Crosswalk Width(ft)		16			16			16			16	
Two way Left Turn Lane												
Headway Factor	1.00	1.00	1.00	1.00	1.00	1.00	1.00	1.00	1.00	1.00	1.00	1.00
Turning Speed (mph)	15		9	15		9	15		9	15		9
Sign Control		Stop			Stop			Stop			Stop	

Intersection Summary	
Area Type:	Other
Control Type: Unsignalized	
Intersection Capacity Utilization 28.3%	ICU Level of Service A
Analysis Period (min) 15	

Lane Group	EBL	EBT	EBR	WBL	WBT	WBR	NBL	NBT	NBR	SBL	SBT	SBR
Lane Configurations												
Traffic Volume (vph)	6	122	16	20	110	29	15	75	19	7	28	7
Future Volume (vph)	6	122	16	20	110	29	15	75	19	7	28	7
Ideal Flow (vphpl)	1900	1900	1900	1900	1900	1900	1900	1900	1900	1900	1900	1900
Lane Util. Factor	1.00	1.00	1.00	1.00	1.00	1.00	1.00	1.00	1.00	1.00	1.00	1.00
Ped Bike Factor												
Frt		0.985			0.975			0.976			0.978	
Flt Protected		0.998			0.994			0.993			0.992	
Satd. Flow (prot)	0	1849	0	0	1805	0	0	1788	0	0	1807	0
Flt Permitted		0.998			0.994			0.993			0.992	
Satd. Flow (perm)	0	1849	0	0	1805	0	0	1788	0	0	1807	0
Link Speed (mph)		30			30			30			30	
Link Distance (ft)		194			1122			681			1304	
Travel Time (s)		4.4			25.5			15.5			29.6	
Confl. Peds. (#/hr)	2		1	1		2	2		1	1		2
Peak Hour Factor	0.86	0.86	0.86	0.86	0.86	0.86	0.86	0.86	0.86	0.86	0.86	0.86
Heavy Vehicles (%)	1%	1%	1%	2%	2%	2%	3%	3%	3%	2%	2%	2%
Adj. Flow (vph)	7	142	19	23	128	34	17	87	22	8	33	8
Shared Lane Traffic (%)												
Lane Group Flow (vph)	0	168	0	0	185	0	0	126	0	0	49	0
Enter Blocked Intersection	No	No	No	No	No	No	No	No	No	No	No	No
Lane Alignment	Left	Left	Right	Left	Left	Right	Left	Left	Right	Left	Left	Right
Median Width(ft)		0			0			0			0	
Link Offset(ft)		0			0			0			0	
Crosswalk Width(ft)		16			16			16			16	
Two way Left Turn Lane												
Headway Factor	1.00	1.00	1.00	1.00	1.00	1.00	1.00	1.00	1.00	1.00	1.00	1.00
Turning Speed (mph)	15		9	15		9	15		9	15		9
Sign Control		Free			Free			Stop			Stop	

Intersection Summary	
Area Type:	Other
Control Type: Unsignalized	
Intersection Capacity Utilization 30.2%	ICU Level of Service A
Analysis Period (min) 15	

Lane Group	EBL	EBT	EBR	WBL	WBT	WBR	NBL	NBT	NBR	SBL	SBT	SBR
Lane Configurations												
Traffic Volume (vph)	11	334	8	56	228	23	11	59	136	21	30	6
Future Volume (vph)	11	334	8	56	228	23	11	59	136	21	30	6
Ideal Flow (vphpl)	1900	1900	1900	1900	1900	1900	1900	1900	1900	1900	1900	1900
Lane Util. Factor	1.00	1.00	1.00	1.00	1.00	1.00	1.00	1.00	1.00	1.00	1.00	1.00
Ped Bike Factor		1.00			1.00							
Frt		0.997			0.990			0.910			0.986	
Flt Protected		0.999			0.991			0.997			0.982	
Satd. Flow (prot)	0	1873	0	0	1846	0	0	1690	0	0	1804	0
Flt Permitted		0.989			0.888			0.978			0.750	
Satd. Flow (perm)	0	1854	0	0	1653	0	0	1658	0	0	1378	0
Right Turn on Red			Yes			Yes			Yes			Yes
Satd. Flow (RTOR)		3			9			142			6	
Link Speed (mph)		30			30			30			30	
Link Distance (ft)		3560			156			188			1295	
Travel Time (s)		80.9			3.5			4.3			29.4	
Confl. Peds. (#/hr)			2	2								
Peak Hour Factor	0.96	0.96	0.96	0.96	0.96	0.96	0.96	0.96	0.96	0.96	0.96	0.96
Heavy Vehicles (%)	1%	1%	1%	1%	1%	1%	2%	2%	2%	2%	2%	2%
Adj. Flow (vph)	11	348	8	58	238	24	11	61	142	22	31	6
Shared Lane Traffic (%)												
Lane Group Flow (vph)	0	367	0	0	320	0	0	214	0	0	59	0
Enter Blocked Intersection	No	No	No	No	No	No	No	No	No	No	No	No
Lane Alignment	Left	Left	Right	Left	Left	Right	Left	Left	Right	Left	Left	Right
Median Width(ft)		0			0			0			0	
Link Offset(ft)		0			0			0			0	
Crosswalk Width(ft)		16			16			16			16	
Two way Left Turn Lane												
Headway Factor	1.00	1.00	1.00	1.00	1.00	1.00	1.00	1.00	1.00	1.00	1.00	1.00
Turning Speed (mph)	15		9	15		9	15		9	15		9
Number of Detectors	1	2		1	2		1	2		1	2	
Detector Template	Left	Thru		Left	Thru		Left	Thru		Left	Thru	
Leading Detector (ft)	20	100		20	100		20	100		20	100	
Trailing Detector (ft)	0	0		0	0		0	0		0	0	
Detector 1 Position(ft)	0	0		0	0		0	0		0	0	
Detector 1 Size(ft)	20	6		20	6		20	6		20	6	
Detector 1 Type	Cl+Ex	Cl+Ex		Cl+Ex	Cl+Ex		Cl+Ex	Cl+Ex		Cl+Ex	Cl+Ex	
Detector 1 Channel												
Detector 1 Extend (s)	0.0	0.0		0.0	0.0		0.0	0.0		0.0	0.0	
Detector 1 Queue (s)	0.0	0.0		0.0	0.0		0.0	0.0		0.0	0.0	
Detector 1 Delay (s)	0.0	0.0		0.0	0.0		0.0	0.0		0.0	0.0	
Detector 2 Position(ft)		94			94			94			94	
Detector 2 Size(ft)		6			6			6			6	
Detector 2 Type		Cl+Ex			Cl+Ex			Cl+Ex			Cl+Ex	
Detector 2 Channel												
Detector 2 Extend (s)		0.0			0.0			0.0			0.0	
Turn Type	Perm	NA		Perm	NA		Perm	NA		Perm	NA	
Protected Phases		2			6			4			8	
Permitted Phases	2			6			4			8		

Lane Group	EBL	EBT	EBR	WBL	WBT	WBR	NBL	NBT	NBR	SBL	SBT	SBR
Detector Phase	2	2		6	6		4	4		8	8	
Switch Phase												
Minimum Initial (s)	12.0	12.0		12.0	12.0		7.0	7.0		7.0	7.0	
Minimum Split (s)	18.0	18.0		18.0	18.0		17.0	17.0		13.0	13.0	
Total Split (s)	41.0	41.0		41.0	41.0		26.0	26.0		26.0	26.0	
Total Split (%)	61.2%	61.2%		61.2%	61.2%		38.8%	38.8%		38.8%	38.8%	
Maximum Green (s)	35.0	35.0		35.0	35.0		20.0	20.0		20.0	20.0	
Yellow Time (s)	4.0	4.0		4.0	4.0		4.0	4.0		4.0	4.0	
All-Red Time (s)	2.0	2.0		2.0	2.0		2.0	2.0		2.0	2.0	
Lost Time Adjust (s)		0.0			0.0			0.0			0.0	
Total Lost Time (s)		6.0			6.0			6.0			6.0	
Lead/Lag												
Lead-Lag Optimize?												
Vehicle Extension (s)	1.0	1.0		1.0	1.0		2.5	2.5		2.5	2.5	
Recall Mode	Max	Max		None	None		None	None		None	None	
Walk Time (s)							1.0	1.0				
Flash Dont Walk (s)							10.0	10.0				
Pedestrian Calls (#/hr)							0	0				
Act Effct Green (s)		35.0			35.0			8.7			8.7	
Actuated g/C Ratio		0.63			0.63			0.16			0.16	
v/c Ratio		0.31			0.31			0.57			0.27	
Control Delay		6.0			6.0			14.8			22.1	
Queue Delay		0.0			0.0			0.0			0.0	
Total Delay		6.0			6.0			14.8			22.1	
LOS		A			A			B			C	
Approach Delay		6.0			6.0			14.8			22.1	
Approach LOS		A			A			B			C	

Intersection Summary	
Area Type:	Other
Cycle Length: 67	
Actuated Cycle Length: 55.7	
Natural Cycle: 40	
Control Type: Actuated-Uncoordinated	
Maximum v/c Ratio: 0.57	
Intersection Signal Delay: 9.0	Intersection LOS: A
Intersection Capacity Utilization 62.5%	ICU Level of Service B
Analysis Period (min) 15	

Splits and Phases: 8: SW 16th St & SW 70th Ave

Lane Group	EBL	EBT	EBR	WBL	WBT	WBR	NBL	NBT	NBR	SBL	SBT	SBR
Lane Configurations												
Traffic Volume (vph)	4	1583	2	13	1151	26	4	0	0	8	0	19
Future Volume (vph)	4	1583	2	13	1151	26	4	0	0	8	0	19
Ideal Flow (vphpl)	1900	1900	1900	1900	1900	1900	1900	1900	1900	1900	1900	1900
Storage Length (ft)	0		0	0		65	0		0	0		0
Storage Lanes	1		0	0		1	0		0	0		0
Taper Length (ft)	25			25			25			25		
Lane Util. Factor	1.00	0.95	0.95	0.91	0.91	1.00	1.00	1.00	1.00	1.00	1.00	1.00
Ped Bike Factor	0.99	1.00				0.91					1.00	
Frt						0.850					0.904	
Flt Protected	0.950				0.999			0.950			0.986	
Satd. Flow (prot)	1770	3539	0	0	5080	1583	0	1736	0	0	1660	0
Flt Permitted	0.950				0.940			0.782			0.902	
Satd. Flow (perm)	1747	3539	0	0	4780	1447	0	1429	0	0	1511	0
Right Turn on Red			Yes			Yes			Yes			Yes
Satd. Flow (RTOR)						93					169	
Link Speed (mph)		30			30			30			30	
Link Distance (ft)		190			193			454			534	
Travel Time (s)		4.3			4.4			10.3			12.1	
Confl. Peds. (#/hr)	12		1	1		12			2	2		
Peak Hour Factor	0.96	0.96	0.96	0.96	0.96	0.92	0.96	0.96	0.96	0.96	0.96	0.96
Heavy Vehicles (%)	2%	2%	2%	2%	2%	2%	4%	4%	4%	2%	2%	2%
Adj. Flow (vph)	4	1649	2	14	1199	28	4	0	0	8	0	20
Shared Lane Traffic (%)												
Lane Group Flow (vph)	4	1651	0	0	1213	28	0	4	0	0	28	0
Enter Blocked Intersection	No	No	No	No	No	No	No	No	No	No	No	No
Lane Alignment	Left	Left	Right	Left	Left	Right	Left	Left	Right	Left	Left	Right
Median Width(ft)		12			12			0			0	
Link Offset(ft)		0			0			0			0	
Crosswalk Width(ft)		16			16			16			16	
Two way Left Turn Lane												
Headway Factor	1.00	1.00	1.00	1.00	1.00	1.00	1.00	1.00	1.00	1.00	1.00	1.00
Turning Speed (mph)	15		9	15		9	15		9	15		9
Number of Detectors	1	2		1	2	1	1	2		1	2	
Detector Template	Left	Thru		Left	Thru	Right	Left	Thru		Left	Thru	
Leading Detector (ft)	20	100		20	100	20	20	100		20	100	
Trailing Detector (ft)	0	0		0	0	0	0	0		0	0	
Detector 1 Position(ft)	0	0		0	0	0	0	0		0	0	
Detector 1 Size(ft)	20	6		20	6	20	20	6		20	6	
Detector 1 Type	Cl+Ex	Cl+Ex		Cl+Ex	Cl+Ex	Cl+Ex	Cl+Ex	Cl+Ex		Cl+Ex	Cl+Ex	
Detector 1 Channel												
Detector 1 Extend (s)	0.0	0.0		0.0	0.0	0.0	0.0	0.0		0.0	0.0	
Detector 1 Queue (s)	0.0	0.0		0.0	0.0	0.0	0.0	0.0		0.0	0.0	
Detector 1 Delay (s)	0.0	0.0		0.0	0.0	0.0	0.0	0.0		0.0	0.0	
Detector 2 Position(ft)		94			94			94			94	
Detector 2 Size(ft)		6			6			6			6	
Detector 2 Type		Cl+Ex			Cl+Ex			Cl+Ex			Cl+Ex	
Detector 2 Channel												
Detector 2 Extend (s)		0.0			0.0			0.0			0.0	

Lane Group	Ø1	Ø2	Ø4	Ø5	Ø6	Ø8	Ø9	Ø13
Lane Configurations								
Traffic Volume (vph)								
Future Volume (vph)								
Ideal Flow (vphpl)								
Storage Length (ft)								
Storage Lanes								
Taper Length (ft)								
Lane Util. Factor								
Ped Bike Factor								
Frt								
Flt Protected								
Satd. Flow (prot)								
Flt Permitted								
Satd. Flow (perm)								
Right Turn on Red								
Satd. Flow (RTOR)								
Link Speed (mph)								
Link Distance (ft)								
Travel Time (s)								
Confl. Peds. (#/hr)								
Peak Hour Factor								
Heavy Vehicles (%)								
Adj. Flow (vph)								
Shared Lane Traffic (%)								
Lane Group Flow (vph)								
Enter Blocked Intersection								
Lane Alignment								
Median Width(ft)								
Link Offset(ft)								
Crosswalk Width(ft)								
Two way Left Turn Lane								
Headway Factor								
Turning Speed (mph)								
Number of Detectors								
Detector Template								
Leading Detector (ft)								
Trailing Detector (ft)								
Detector 1 Position(ft)								
Detector 1 Size(ft)								
Detector 1 Type								
Detector 1 Channel								
Detector 1 Extend (s)								
Detector 1 Queue (s)								
Detector 1 Delay (s)								
Detector 2 Position(ft)								
Detector 2 Size(ft)								
Detector 2 Type								
Detector 2 Channel								
Detector 2 Extend (s)								

Lane Group	EBL	EBT	EBR	WBL	WBT	WBR	NBL	NBT	NBR	SBL	SBT	SBR
Turn Type	Prot	NA		Prot	NA	Perm	Perm	NA		Perm	NA	
Protected Phases	1 13	6 13		5 8!	2 8!			3!			7	
Permitted Phases						2 8	3!			7		
Detector Phase	1 13	6 13		5 8	2 8	2 8	3	3		7	7	
Switch Phase												
Minimum Initial (s)							7.0	7.0		5.0	5.0	
Minimum Split (s)							13.0	13.0		10.7	10.7	
Total Split (s)							12.0	12.0		12.0	12.0	
Total Split (%)							6.7%	6.7%		6.7%	6.7%	
Maximum Green (s)							6.0	6.0		6.3	6.3	
Yellow Time (s)							4.0	4.0		3.7	3.7	
All-Red Time (s)							2.0	2.0		2.0	2.0	
Lost Time Adjust (s)								0.0			0.0	
Total Lost Time (s)								6.0			5.7	
Lead/Lag							Lead	Lead		Lead	Lead	
Lead-Lag Optimize?							Yes	Yes		Yes	Yes	
Vehicle Extension (s)							2.5	2.5		2.0	2.0	
Recall Mode							Max	Max		Max	Max	
Walk Time (s)												
Flash Dont Walk (s)												
Pedestrian Calls (#/hr)												
Act Effct Green (s)	85.4	107.6			70.7	70.2		33.0			6.3	
Actuated g/C Ratio	0.47	0.60			0.39	0.39		0.18			0.04	
v/c Ratio	0.00	0.78			0.70	0.05		0.02			0.13	
Control Delay	35.8	30.7			45.3	0.2		60.8			1.3	
Queue Delay	0.0	48.9			0.0	0.0		0.0			0.0	
Total Delay	35.8	79.6			45.3	0.2		60.8			1.3	
LOS	D	E			D	A		E			A	
Approach Delay		79.5			44.3			60.8			1.3	
Approach LOS		E			D			E			A	

Intersection Summary

Area Type: Other
Cycle Length: 180
Actuated Cycle Length: 180
Offset: 160 (89%), Referenced to phase 2:WBT and 6:EBT, Start of Yellow
Natural Cycle: 100
Control Type: Actuated-Coordinated
Maximum v/c Ratio: 0.78
Intersection Signal Delay: 63.8 Intersection LOS: E
Intersection Capacity Utilization 78.7% ICU Level of Service D
Analysis Period (min) 15
! Phase conflict between lane groups.

Splits and Phases: 9: Driveway/SW 70th Ct & SW 24th St

Lane Group	Ø1	Ø2	Ø4	Ø5	Ø6	Ø8	Ø9	Ø13
Turn Type								
Protected Phases	1	2	4	5	6	8	9	13
Permitted Phases								
Detector Phase								
Switch Phase								
Minimum Initial (s)	5.0	7.0	5.0	5.0	7.0	7.0	7.0	7.0
Minimum Split (s)	11.0	22.4	24.0	10.7	27.4	27.4	13.0	13.0
Total Split (s)	16.0	110.0	27.0	27.0	99.0	27.0	15.0	15.0
Total Split (%)	9%	61%	15%	15%	55%	15%	8%	8%
Maximum Green (s)	10.0	103.6	21.0	21.3	92.6	20.6	9.0	9.0
Yellow Time (s)	4.0	4.4	4.0	3.7	4.4	4.4	4.0	4.0
All-Red Time (s)	2.0	2.0	2.0	2.0	2.0	2.0	2.0	2.0
Lost Time Adjust (s)								
Total Lost Time (s)								
Lead/Lag	Lag	Lead	Lag	Lead	Lag	Lag		
Lead-Lag Optimize?	Yes	Yes	Yes	Yes	Yes	Yes		
Vehicle Extension (s)	3.0	1.0	3.0	3.0	1.0	1.0	1.0	1.0
Recall Mode	Max	C-Min	None	Max	C-Max	None	None	None
Walk Time (s)		7.0	7.0		7.0	7.0		
Flash Dont Walk (s)		9.0	11.0		14.0	14.0		
Pedestrian Calls (#/hr)		0	0		0	0		
Act Effct Green (s)								
Actuated g/C Ratio								
v/c Ratio								
Control Delay								
Queue Delay								
Total Delay								
LOS								
Approach Delay								
Approach LOS								

Intersection Summary

Lane Group	EBL	EBT	EBR	WBL	WBT	WBR	NBL	NBT	NBR	SBL	SBT	SBR
Lane Configurations												
Traffic Volume (vph)	36	1568	75	10	1065	64	31	13	26	9	6	52
Future Volume (vph)	36	1568	75	10	1065	64	31	13	26	9	6	52
Ideal Flow (vphpl)	1900	1900	1900	1900	1900	1900	1900	1900	1900	1900	1900	1900
Storage Length (ft)	0		80	0		100	0		0	0		0
Storage Lanes	0		1	0		1	0		0	0		0
Taper Length (ft)	25			25			25			25		
Lane Util. Factor	0.95	0.95	1.00	0.95	0.95	1.00	1.00	1.00	1.00	1.00	1.00	1.00
Ped Bike Factor												
Frt			0.850			0.850		0.949			0.894	
Flt Protected		0.999						0.978			0.994	
Satd. Flow (prot)	0	3536	1583	0	3539	1583	0	1746	0	0	1672	0
Flt Permitted		0.999						0.978			0.994	
Satd. Flow (perm)	0	3536	1583	0	3539	1583	0	1746	0	0	1672	0
Link Speed (mph)		30			30			30			30	
Link Distance (ft)		243			5738			2923			238	
Travel Time (s)		5.5			130.4			66.4			5.4	
Confl. Peds. (#/hr)	3					3	2		2	2		2
Peak Hour Factor	0.97	0.97	0.97	0.97	0.97	0.97	0.97	0.97	0.97	0.97	0.97	0.97
Heavy Vehicles (%)	2%	2%	2%	2%	2%	2%	1%	1%	1%	1%	1%	1%
Adj. Flow (vph)	37	1616	77	10	1098	66	32	13	27	9	6	54
Shared Lane Traffic (%)												
Lane Group Flow (vph)	0	1653	77	0	1108	66	0	72	0	0	69	0
Enter Blocked Intersection	No	No	No	No	No	No	No	No	No	No	No	No
Lane Alignment	Left	Left	Right	Left	Left	Right	Left	Left	Right	Left	Left	Right
Median Width(ft)		0			0			0			0	
Link Offset(ft)		0			0			0			0	
Crosswalk Width(ft)		16			16			16			16	
Two way Left Turn Lane												
Headway Factor	1.00	1.00	1.00	1.00	1.00	1.00	1.00	1.00	1.00	1.00	1.00	1.00
Turning Speed (mph)	15		9	15		9	15		9	15		9
Sign Control		Free			Free			Stop			Stop	

Intersection Summary			
Area Type:	Other		
Control Type: Unsignalized			
Intersection Capacity Utilization 86.0%		ICU Level of Service E	
Analysis Period (min) 15			

Lane Group	EBL	EBT	EBR	WBL	WBT	WBR	NBL	NBT	NBR	SBL	SBT	SBR
Lane Configurations												
Traffic Volume (vph)	8	3168	21	41	1757	8	0	0	0	2	0	5
Future Volume (vph)	8	3168	21	41	1757	8	0	0	0	2	0	5
Ideal Flow (vphpl)	1900	1900	1900	1900	1900	1900	1900	1900	1900	1900	1900	1900
Storage Length (ft)	50		0	50		0	0		0	0		90
Storage Lanes	1		0	0		0	0		0	1		1
Taper Length (ft)	25			25			25			25		
Lane Util. Factor	1.00	0.91	0.91	0.91	0.91	0.91	1.00	1.00	1.00	1.00	1.00	1.00
Ped Bike Factor												
Frt		0.999			0.999							0.850
Flt Protected	0.950				0.999					0.950		
Satd. Flow (prot)	1770	5080	0	0	5075	0	0	1863	0	1433	0	1282
Flt Permitted	0.950				0.999					0.950		
Satd. Flow (perm)	1770	5080	0	0	5075	0	0	1863	0	1433	0	1282
Link Speed (mph)		30			30			30			30	
Link Distance (ft)		1738			387			292			477	
Travel Time (s)		39.5			8.8			6.6			10.8	
Confl. Peds. (#/hr)	10					10						
Peak Hour Factor	0.99	0.99	0.99	0.99	0.99	0.99	0.99	0.99	0.99	0.99	0.92	0.99
Heavy Vehicles (%)	2%	2%	2%	2%	2%	2%	2%	2%	2%	26%	2%	26%
Adj. Flow (vph)	8	3200	21	41	1775	8	0	0	0	2	0	5
Shared Lane Traffic (%)												
Lane Group Flow (vph)	8	3221	0	0	1824	0	0	0	0	2	0	5
Enter Blocked Intersection	No	No	No	No	No	No	No	No	No	No	No	No
Lane Alignment	Left	Left	Right	Left	Left	Right	Left	Left	Right	Left	Left	Right
Median Width(ft)		12			12			12			12	
Link Offset(ft)		0			0			0			0	
Crosswalk Width(ft)		16			16			16			16	
Two way Left Turn Lane												
Headway Factor	1.00	1.00	1.00	1.00	1.00	1.00	1.00	1.00	1.00	1.00	1.00	1.00
Turning Speed (mph)	15		9	15		9	15		9	15		9
Sign Control		Free			Free			Stop			Stop	

Intersection Summary	
Area Type:	Other
Control Type: Unsignalized	
Intersection Capacity Utilization 73.5%	ICU Level of Service D
Analysis Period (min) 15	

Lane Group	EBL	EBT	EBR	WBL	WBT	WBR	NBL	NBT	NBR	SBL	SBT	SBR
Lane Configurations												
Traffic Volume (vph)	165	2717	83	11	1976	21	0	0	52	0	0	91
Future Volume (vph)	165	2717	83	11	1976	21	0	0	52	0	0	91
Ideal Flow (vphpl)	1900	1900	1900	1900	1900	1900	1900	1900	1900	1900	1900	1900
Storage Length (ft)	0		0	120		0	0		0	0		0
Storage Lanes	1		0	1		0	0		1	0		1
Taper Length (ft)	25			25			25			25		
Lane Util. Factor	1.00	0.91	0.91	1.00	0.91	0.91	1.00	1.00	1.00	1.00	1.00	1.00
Ped Bike Factor												
Frt		0.996			0.998				0.865			0.865
Flt Protected	0.950			0.950								
Satd. Flow (prot)	1770	5065	0	1770	5075	0	0	0	1611	0	0	1611
Flt Permitted	0.950			0.950								
Satd. Flow (perm)	1770	5065	0	1770	5075	0	0	0	1611	0	0	1611
Link Speed (mph)		30			30			30			30	
Link Distance (ft)		134			4054			653			1966	
Travel Time (s)		3.0			92.1			14.8			44.7	
Confl. Peds. (#/hr)			1	1			2					2
Peak Hour Factor	0.95	0.95	0.95	0.95	0.95	0.95	0.95	0.95	0.95	0.95	0.95	0.95
Adj. Flow (vph)	174	2860	87	12	2080	22	0	0	55	0	0	96
Shared Lane Traffic (%)												
Lane Group Flow (vph)	174	2947	0	12	2102	0	0	0	55	0	0	96
Enter Blocked Intersection	No	No	No	No	No	No	No	No	No	No	No	No
Lane Alignment	Left	Left	Right	Left	Left	Right	Left	Left	Right	Left	Left	Right
Median Width(ft)		12			12			0			0	
Link Offset(ft)		0			0			0			0	
Crosswalk Width(ft)		16			16			16			16	
Two way Left Turn Lane												
Headway Factor	1.00	1.00	1.00	1.00	1.00	1.00	1.00	1.00	1.00	1.00	1.00	1.00
Turning Speed (mph)	15		9	15		9	15		9	15		9
Sign Control		Free			Free			Stop			Stop	

Intersection Summary	
Area Type:	Other
Control Type: Unsignalized	
Intersection Capacity Utilization 64.3%	ICU Level of Service C
Analysis Period (min) 15	

Lane Group	EBT	EBR	WBL	WBT	NBL	NBR
Lane Configurations						
Traffic Volume (vph)	1467	157	68	804	31	31
Future Volume (vph)	1467	157	68	804	31	31
Ideal Flow (vphpl)	1900	1900	1900	1900	1900	1900
Storage Length (ft)		0	80		0	0
Storage Lanes		0	1		1	0
Taper Length (ft)			25		25	
Lane Util. Factor	0.95	0.95	1.00	0.95	1.00	1.00
Ped Bike Factor						
Frt	0.985				0.932	
Flt Protected			0.950		0.976	
Satd. Flow (prot)	3486	0	1770	3539	1711	0
Flt Permitted			0.950		0.976	
Satd. Flow (perm)	3486	0	1770	3539	1711	0
Link Speed (mph)	30			30	30	
Link Distance (ft)	2216			231	1151	
Travel Time (s)	50.4			5.3	26.2	
Confl. Peds. (#/hr)		3	3			
Peak Hour Factor	0.91	0.91	0.91	0.91	0.91	0.91
Heavy Vehicles (%)	2%	2%	2%	2%	1%	1%
Adj. Flow (vph)	1612	173	75	884	34	34
Shared Lane Traffic (%)						
Lane Group Flow (vph)	1785	0	75	884	68	0
Enter Blocked Intersection	No	No	No	No	No	No
Lane Alignment	Left	Right	Left	Left	Left	Right
Median Width(ft)	12			12	12	
Link Offset(ft)	0			0	0	
Crosswalk Width(ft)	16			16	16	
Two way Left Turn Lane						
Headway Factor	1.00	1.00	1.00	1.00	1.00	1.00
Turning Speed (mph)		9	15		15	9
Sign Control	Free			Free	Stop	

Intersection Summary	
Area Type:	Other
Control Type: Unsignalized	
Intersection Capacity Utilization 63.0%	ICU Level of Service B
Analysis Period (min) 15	

Lane Group	EBT	EBR	WBL	WBT	NBL	NBR
Lane Configurations						
Traffic Volume (vph)	1627	76	28	740	4	42
Future Volume (vph)	1627	76	28	740	4	42
Ideal Flow (vphpl)	1900	1900	1900	1900	1900	1900
Storage Length (ft)		0	80		0	0
Storage Lanes		0	1		1	0
Taper Length (ft)			25		25	
Lane Util. Factor	0.95	0.95	1.00	0.95	1.00	1.00
Ped Bike Factor						
Frt	0.993				0.876	
Flt Protected			0.950		0.996	
Satd. Flow (prot)	3514	0	1770	3539	1609	0
Flt Permitted			0.950		0.996	
Satd. Flow (perm)	3514	0	1770	3539	1609	0
Link Speed (mph)	30			30	30	
Link Distance (ft)	228			2182	751	
Travel Time (s)	5.2			49.6	17.1	
Confl. Peds. (#/hr)		2	2			
Peak Hour Factor	0.91	0.91	0.91	0.91	0.91	0.91
Heavy Vehicles (%)	2%	2%	2%	2%	3%	3%
Adj. Flow (vph)	1788	84	31	813	4	46
Shared Lane Traffic (%)						
Lane Group Flow (vph)	1872	0	31	813	50	0
Enter Blocked Intersection	No	No	No	No	No	No
Lane Alignment	Left	Right	Left	Left	Left	Right
Median Width(ft)	12			12	12	
Link Offset(ft)	0			0	0	
Crosswalk Width(ft)	16			16	16	
Two way Left Turn Lane						
Headway Factor	1.00	1.00	1.00	1.00	1.00	1.00
Turning Speed (mph)		9	15		15	9
Sign Control	Free			Free	Stop	

Intersection Summary	
Area Type:	Other
Control Type: Unsignalized	
Intersection Capacity Utilization 57.4%	ICU Level of Service B
Analysis Period (min) 15	

Lane Group	EBL	EBT	WBT	WBR	SBL	SBR
Lane Configurations						
Traffic Volume (vph)	9	1744	600	5	3	13
Future Volume (vph)	9	1744	600	5	3	13
Ideal Flow (vphpl)	1900	1900	1900	1900	1900	1900
Storage Length (ft)	135			0	0	0
Storage Lanes	1			0	1	0
Taper Length (ft)	25				25	
Lane Util. Factor	1.00	0.95	0.95	0.95	1.00	1.00
Ped Bike Factor						
Frt			0.999		0.890	
Flt Protected	0.950				0.991	
Satd. Flow (prot)	1787	3574	3571	0	1659	0
Flt Permitted	0.950				0.991	
Satd. Flow (perm)	1787	3574	3571	0	1659	0
Link Speed (mph)		30	30		30	
Link Distance (ft)		401	7150		2598	
Travel Time (s)		9.1	162.5		59.0	
Confl. Peds. (#/hr)	2			2		
Peak Hour Factor	0.97	0.97	0.97	0.97	0.97	0.97
Heavy Vehicles (%)	1%	1%	1%	1%	1%	1%
Adj. Flow (vph)	9	1798	619	5	3	13
Shared Lane Traffic (%)						
Lane Group Flow (vph)	9	1798	624	0	16	0
Enter Blocked Intersection	No	No	No	No	No	No
Lane Alignment	Left	Left	Left	Right	Left	Right
Median Width(ft)		12	12		12	
Link Offset(ft)		0	0		0	
Crosswalk Width(ft)		16	16		16	
Two way Left Turn Lane						
Headway Factor	1.00	1.00	1.00	1.00	1.00	1.00
Turning Speed (mph)	15			9	15	9
Sign Control		Free	Free		Stop	

Intersection Summary	
Area Type:	Other
Control Type: Unsignalized	
Intersection Capacity Utilization 58.2%	ICU Level of Service B
Analysis Period (min) 15	

Lane Group	EBT	EBR	WBL	WBT	NBL	NBR
Lane Configurations						
Traffic Volume (vph)	556	15	45	187	92	435
Future Volume (vph)	556	15	45	187	92	435
Ideal Flow (vphpl)	1900	1900	1900	1900	1900	1900
Lane Util. Factor	1.00	1.00	1.00	1.00	0.97	1.00
Ped Bike Factor	1.00		1.00			
Frt	0.996					0.850
Flt Protected			0.950		0.950	
Satd. Flow (prot)	1855	0	1787	1881	3400	1568
Flt Permitted			0.294		0.950	
Satd. Flow (perm)	1855	0	553	1881	3400	1568
Right Turn on Red		Yes				Yes
Satd. Flow (RTOR)	2					453
Link Speed (mph)	30			30	30	
Link Distance (ft)	155			1747	395	
Travel Time (s)	3.5			39.7	9.0	
Confl. Peds. (#/hr)		1	1			6
Peak Hour Factor	0.96	0.96	0.96	0.96	0.96	0.96
Heavy Vehicles (%)	2%	2%	1%	1%	3%	3%
Adj. Flow (vph)	579	16	47	195	96	453
Shared Lane Traffic (%)						
Lane Group Flow (vph)	595	0	47	195	96	453
Enter Blocked Intersection	No	No	No	No	No	No
Lane Alignment	Left	Right	Left	Left	Left	Right
Median Width(ft)	12			12	24	
Link Offset(ft)	0			0	0	
Crosswalk Width(ft)	16			16	16	
Two way Left Turn Lane						
Headway Factor	1.00	1.00	1.00	1.00	1.00	1.00
Turning Speed (mph)		9	15		15	9
Number of Detectors	2		1	2	1	1
Detector Template	Thru		Left	Thru	Left	Right
Leading Detector (ft)	100		20	100	20	20
Trailing Detector (ft)	0		0	0	0	0
Detector 1 Position(ft)	0		0	0	0	0
Detector 1 Size(ft)	6		20	6	20	20
Detector 1 Type	Cl+Ex		Cl+Ex	Cl+Ex	Cl+Ex	Cl+Ex
Detector 1 Channel						
Detector 1 Extend (s)	0.0		0.0	0.0	0.0	0.0
Detector 1 Queue (s)	0.0		0.0	0.0	0.0	0.0
Detector 1 Delay (s)	0.0		0.0	0.0	0.0	0.0
Detector 2 Position(ft)	94			94		
Detector 2 Size(ft)	6			6		
Detector 2 Type	Cl+Ex			Cl+Ex		
Detector 2 Channel						
Detector 2 Extend (s)	0.0			0.0		
Turn Type	NA		pm+pt	NA	Perm	Over
Protected Phases	6		5	2		5
Permitted Phases			2		4	

Lane Group	EBT	EBR	WBL	WBT	NBL	NBR
Detector Phase	6		5	2	4	5
Switch Phase						
Minimum Initial (s)	15.0		5.0	15.0	7.0	5.0
Minimum Split (s)	22.5		12.2	22.5	17.0	12.2
Total Split (s)	48.0		14.0	62.0	24.0	14.0
Total Split (%)	55.8%		16.3%	72.1%	27.9%	16.3%
Maximum Green (s)	40.5		6.8	54.5	18.0	6.8
Yellow Time (s)	4.0		3.7	4.0	4.0	3.7
All-Red Time (s)	3.5		3.5	3.5	2.0	3.5
Lost Time Adjust (s)	0.0		0.0	0.0	0.0	0.0
Total Lost Time (s)	7.5		7.2	7.5	6.0	7.2
Lead/Lag	Lag		Lead			Lead
Lead-Lag Optimize?	Yes		Yes			Yes
Vehicle Extension (s)	1.0		2.0	1.0	2.5	2.0
Recall Mode	Max		None	Max	None	None
Walk Time (s)					2.0	
Flash Dont Walk (s)					9.0	
Pedestrian Calls (#/hr)					0	
Act Effct Green (s)	41.1		55.2	56.6	7.5	6.5
Actuated g/C Ratio	0.56		0.76	0.78	0.10	0.09
v/c Ratio	0.57		0.09	0.13	0.27	0.82
Control Delay	14.0		3.4	3.4	33.6	18.0
Queue Delay	0.0		0.0	0.0	0.0	0.0
Total Delay	14.0		3.4	3.4	33.6	18.0
LOS	B		A	A	C	B
Approach Delay	14.0			3.4	20.7	
Approach LOS	B			A	C	

Intersection Summary	
Area Type:	Other
Cycle Length: 86	
Actuated Cycle Length: 72.9	
Natural Cycle: 75	
Control Type: Actuated-Uncoordinated	
Maximum v/c Ratio: 0.82	
Intersection Signal Delay: 14.8	Intersection LOS: B
Intersection Capacity Utilization 70.0%	ICU Level of Service C
Analysis Period (min) 15	

Splits and Phases: 16: SW 70th Ave & SW 80th St

Lane Group	EBL	EBT	WBT	WBR	SBL	SBR
Lane Configurations						
Traffic Volume (vph)	14	453	273	9	9	32
Future Volume (vph)	14	453	273	9	9	32
Ideal Flow (vphpl)	1900	1900	1900	1900	1900	1900
Lane Util. Factor	1.00	1.00	1.00	1.00	1.00	1.00
Ped Bike Factor						
Frt			0.996		0.893	
Flt Protected		0.998			0.990	
Satd. Flow (prot)	0	1859	1874	0	1663	0
Flt Permitted		0.998			0.990	
Satd. Flow (perm)	0	1859	1874	0	1663	0
Link Speed (mph)		30	30		30	
Link Distance (ft)		235	1246		617	
Travel Time (s)		5.3	28.3		14.0	
Confl. Peds. (#/hr)	2			2		
Peak Hour Factor	0.95	0.95	0.95	0.95	0.95	0.95
Heavy Vehicles (%)	2%	2%	1%	1%	1%	1%
Adj. Flow (vph)	15	477	287	9	9	34
Shared Lane Traffic (%)						
Lane Group Flow (vph)	0	492	296	0	43	0
Enter Blocked Intersection	No	No	No	No	No	No
Lane Alignment	Left	Left	Left	Right	Left	Right
Median Width(ft)		0	0		12	
Link Offset(ft)		0	0		0	
Crosswalk Width(ft)		16	16		16	
Two way Left Turn Lane						
Headway Factor	1.00	1.00	1.00	1.00	1.00	1.00
Turning Speed (mph)	15			9	15	9
Sign Control		Free	Free		Stop	

Intersection Summary	
Area Type:	Other
Control Type: Unsignalized	
Intersection Capacity Utilization 45.1%	ICU Level of Service A
Analysis Period (min) 15	

Lane Group	EBL	EBT	WBT	WBR	SBL	SBR
Lane Configurations						
Traffic Volume (vph)	4	1781	564	2	4	5
Future Volume (vph)	4	1781	564	2	4	5
Ideal Flow (vphpl)	1900	1900	1900	1900	1900	1900
Storage Length (ft)	60			0	0	0
Storage Lanes	1			0	1	0
Taper Length (ft)	25				25	
Lane Util. Factor	1.00	0.95	0.95	0.95	1.00	1.00
Ped Bike Factor						
Frt					0.925	
Flt Protected	0.950				0.978	
Satd. Flow (prot)	1787	3574	3574	0	1669	0
Flt Permitted	0.950				0.978	
Satd. Flow (perm)	1787	3574	3574	0	1669	0
Link Speed (mph)		30	30		30	
Link Distance (ft)		1866	224		577	
Travel Time (s)		42.4	5.1		13.1	
Confl. Peds. (#/hr)	3			3		
Peak Hour Factor	0.93	0.93	0.93	0.93	0.93	0.93
Heavy Vehicles (%)	1%	1%	1%	1%	3%	3%
Adj. Flow (vph)	4	1915	606	2	4	5
Shared Lane Traffic (%)						
Lane Group Flow (vph)	4	1915	608	0	9	0
Enter Blocked Intersection	No	No	No	No	No	No
Lane Alignment	Left	Left	Left	Right	Left	Right
Median Width(ft)		12	12		12	
Link Offset(ft)		0	0		0	
Crosswalk Width(ft)		16	16		16	
Two way Left Turn Lane						
Headway Factor	1.00	1.00	1.00	1.00	1.00	1.00
Turning Speed (mph)	15			9	15	9
Sign Control		Free	Free		Stop	

Intersection Summary	
Area Type:	Other
Control Type: Unsignalized	
Intersection Capacity Utilization 59.2%	ICU Level of Service B
Analysis Period (min) 15	

Lane Group	EBL	EBT	EBR	WBL	WBT	WBR	NBL	NBT	NBR	SBL	SBT	SBR
Lane Configurations												
Traffic Volume (vph)	22	123	27	0	1	0	1	2	0	264	31	10
Future Volume (vph)	22	123	27	0	1	0	1	2	0	264	31	10
Ideal Flow (vphpl)	1900	1900	1900	1900	1900	1900	1900	1900	1900	1900	1900	1900
Lane Util. Factor	1.00	1.00	1.00	1.00	1.00	1.00	1.00	1.00	1.00	1.00	1.00	1.00
Ped Bike Factor												
Frt		0.979									0.996	
Flt Protected		0.994						0.984			0.959	
Satd. Flow (prot)	0	1831	0	0	1881	0	0	1851	0	0	1797	0
Flt Permitted		0.994						0.984			0.959	
Satd. Flow (perm)	0	1831	0	0	1881	0	0	1851	0	0	1797	0
Link Speed (mph)		30			30			30			30	
Link Distance (ft)		265			1151			219			613	
Travel Time (s)		6.0			26.2			5.0			13.9	
Confl. Peds. (#/hr)	3		68	68		3	1		85	85		1
Peak Hour Factor	0.82	0.82	0.82	0.82	0.82	0.82	0.82	0.82	0.82	0.82	0.82	0.82
Heavy Vehicles (%)	1%	1%	1%	1%	1%	1%	1%	1%	1%	1%	1%	1%
Adj. Flow (vph)	27	150	33	0	1	0	1	2	0	322	38	12
Shared Lane Traffic (%)												
Lane Group Flow (vph)	0	210	0	0	1	0	0	3	0	0	372	0
Enter Blocked Intersection	No	No	No	No	No	No	No	No	No	No	No	No
Lane Alignment	Left	Left	Right	Left	Left	Right	Left	Left	Right	Left	Left	Right
Median Width(ft)		0			0			0			0	
Link Offset(ft)		0			0			0			0	
Crosswalk Width(ft)		16			16			16			16	
Two way Left Turn Lane												
Headway Factor	1.00	1.00	1.00	1.00	1.00	1.00	1.00	1.00	1.00	1.00	1.00	1.00
Turning Speed (mph)	15		9	15		9	15		9	15		9
Sign Control		Stop			Stop			Stop			Stop	

Intersection Summary	
Area Type:	Other
Control Type: Unsignalized	
Intersection Capacity Utilization 47.0%	ICU Level of Service A
Analysis Period (min) 15	

Synchro Inputs – Existing Condition - PM

Lane Group	EBL	EBT	EBR	WBL	WBT	WBR	NBL	NBT	NBR	SBL	SBT	SBR
Lane Configurations												
Traffic Volume (vph)	2	1477	98	39	1571	4	115	63	16	6	85	274
Future Volume (vph)	2	1477	98	39	1571	4	115	63	16	6	85	274
Ideal Flow (vphpl)	1900	1900	1900	1900	1900	1900	1900	1900	1900	1900	1900	1900
Storage Length (ft)	0		0	110		0	120		0	80		0
Storage Lanes	0		0	1		0	1		0	1		1
Taper Length (ft)	25			25			25			25		
Lane Util. Factor	0.95	0.95	0.95	1.00	0.95	0.95	1.00	1.00	1.00	1.00	1.00	1.00
Ped Bike Factor					1.00		1.00	1.00		0.99		0.99
Frt		0.991						0.970				0.850
Flt Protected				0.950			0.950			0.950		
Satd. Flow (prot)	0	3507	0	1752	3504	0	1719	1748	0	1770	1863	1583
Flt Permitted		0.953		0.075			0.662			0.676		
Satd. Flow (perm)	0	3343	0	138	3504	0	1195	1748	0	1251	1863	1561
Right Turn on Red			Yes			Yes			Yes			Yes
Satd. Flow (RTOR)		8						6				57
Link Speed (mph)		30			30			30			30	
Link Distance (ft)		171			3106			1344			634	
Travel Time (s)		3.9			70.6			30.5			14.4	
Confl. Peds. (#/hr)	8					8	1		3	3		1
Peak Hour Factor	0.93	0.93	0.93	0.93	0.93	0.93	0.93	0.93	0.93	0.93	0.93	0.93
Heavy Vehicles (%)	2%	2%	2%	3%	3%	3%	5%	5%	5%	2%	2%	2%
Adj. Flow (vph)	2	1588	105	42	1689	4	124	68	17	6	91	295
Shared Lane Traffic (%)												
Lane Group Flow (vph)	0	1695	0	42	1693	0	124	85	0	6	91	295
Enter Blocked Intersection	No	No	No	No	No	No	No	No	No	No	No	No
Lane Alignment	Left	Left	Right	Left	Left	Right	Left	Left	Right	Left	Left	Right
Median Width(ft)		12			12			12			12	
Link Offset(ft)		0			0			0			0	
Crosswalk Width(ft)		16			16			16			16	
Two way Left Turn Lane												
Headway Factor	1.00	1.00	1.00	1.00	1.00	1.00	1.00	1.00	1.00	1.00	1.00	1.00
Turning Speed (mph)	15		9	15		9	15		9	15		9
Number of Detectors	1	2		1	2		1	2		1	2	1
Detector Template	Left	Thru		Left	Thru		Left	Thru		Left	Thru	Right
Leading Detector (ft)	20	100		20	100		20	100		20	100	20
Trailing Detector (ft)	0	0		0	0		0	0		0	0	0
Detector 1 Position(ft)	0	0		0	0		0	0		0	0	0
Detector 1 Size(ft)	20	6		20	6		20	6		20	6	20
Detector 1 Type	Cl+Ex	Cl+Ex		Cl+Ex	Cl+Ex		Cl+Ex	Cl+Ex		Cl+Ex	Cl+Ex	Cl+Ex
Detector 1 Channel												
Detector 1 Extend (s)	0.0	0.0		0.0	0.0		0.0	0.0		0.0	0.0	0.0
Detector 1 Queue (s)	0.0	0.0		0.0	0.0		0.0	0.0		0.0	0.0	0.0
Detector 1 Delay (s)	0.0	0.0		0.0	0.0		0.0	0.0		0.0	0.0	0.0
Detector 2 Position(ft)		94			94			94			94	
Detector 2 Size(ft)		6			6			6			6	
Detector 2 Type		Cl+Ex			Cl+Ex			Cl+Ex			Cl+Ex	
Detector 2 Channel												
Detector 2 Extend (s)		0.0			0.0			0.0			0.0	

Lane Group	EBL	EBT	EBR	WBL	WBT	WBR	NBL	NBT	NBR	SBL	SBT	SBR
Turn Type	Perm	NA		pm+pt	NA		Perm	NA		Perm	NA	Perm
Protected Phases		6		5	2			4			8	
Permitted Phases	6			2			4			8		8
Detector Phase	6	6		5	2		4	4		8	8	8
Switch Phase												
Minimum Initial (s)	7.0	7.0		5.0	7.0		7.0	7.0		7.0	7.0	7.0
Minimum Split (s)	29.4	29.4		11.0	29.4		28.0	28.0		28.0	28.0	28.0
Total Split (s)	126.0	126.0		14.0	140.0		40.0	40.0		40.0	40.0	40.0
Total Split (%)	70.0%	70.0%		7.8%	77.8%		22.2%	22.2%		22.2%	22.2%	22.2%
Maximum Green (s)	119.6	119.6		8.0	133.6		34.0	34.0		34.0	34.0	34.0
Yellow Time (s)	4.4	4.4		4.0	4.4		4.0	4.0		4.0	4.0	4.0
All-Red Time (s)	2.0	2.0		2.0	2.0		2.0	2.0		2.0	2.0	2.0
Lost Time Adjust (s)		0.0		0.0	0.0		0.0	0.0		0.0	0.0	0.0
Total Lost Time (s)		6.4		6.0	6.4		6.0	6.0		6.0	6.0	6.0
Lead/Lag	Lag	Lag		Lead								
Lead-Lag Optimize?	Yes	Yes		Yes								
Vehicle Extension (s)	1.0	1.0		2.0	1.0		2.5	2.5		2.5	2.5	2.5
Recall Mode	None	None		Max	C-Min		Max	Max		Max	Max	Max
Walk Time (s)	7.0	7.0			7.0		7.0	7.0		7.0	7.0	7.0
Flash Dont Walk (s)	16.0	16.0			16.0		15.0	15.0		15.0	15.0	15.0
Pedestrian Calls (#/hr)	0	0			0		0	0		0	0	0
Act Effct Green (s)		119.6		134.0	133.6		34.0	34.0		34.0	34.0	34.0
Actuated g/C Ratio		0.66		0.74	0.74		0.19	0.19		0.19	0.19	0.19
v/c Ratio		0.76		0.24	0.65		0.55	0.25		0.03	0.26	0.87
Control Delay		23.3		9.3	13.0		76.5	60.1		60.2	64.6	80.7
Queue Delay		0.0		0.0	0.0		0.0	0.0		0.0	0.0	0.0
Total Delay		23.3		9.3	13.0		76.5	60.1		60.2	64.6	80.7
LOS		C		A	B		E	E		E	E	F
Approach Delay		23.3			13.0			69.8			76.7	
Approach LOS		C			B			E			E	

Intersection Summary

Area Type: Other
Cycle Length: 180
Actuated Cycle Length: 180
Offset: 17 (9%), Referenced to phase 2:WBTL, Start of Yellow
Natural Cycle: 90
Control Type: Actuated-Coordinated
Maximum v/c Ratio: 0.87
Intersection Signal Delay: 26.5 — Intersection LOS: C
Intersection Capacity Utilization 83.6% — ICU Level of Service E
Analysis Period (min) 15

Splits and Phases: 1: SW 69th Ave/NW 69th Ave & W Flagler St

Lane Group	EBL	EBT	WBT	WBR	SBL	SBR
Lane Configurations						
Traffic Volume (vph)	18	1667	1946	12	4	16
Future Volume (vph)	18	1667	1946	12	4	16
Ideal Flow (vphpl)	1900	1900	1900	1900	1900	1900
Storage Length (ft)	125			0	0	0
Storage Lanes	1			0	1	0
Taper Length (ft)	25				25	
Lane Util. Factor	1.00	0.95	0.95	0.95	1.00	1.00
Ped Bike Factor						
Frt			0.999		0.892	
Flt Protected	0.950				0.990	
Satd. Flow (prot)	1787	3574	3571	0	1661	0
Flt Permitted	0.950				0.990	
Satd. Flow (perm)	1787	3574	3571	0	1661	0
Link Speed (mph)		30	30		30	
Link Distance (ft)		2193	130		251	
Travel Time (s)		49.8	3.0		5.7	
Confl. Peds. (#/hr)	8			8	1	4
Peak Hour Factor	0.97	0.97	0.97	0.97	0.97	0.97
Heavy Vehicles (%)	1%	1%	1%	1%	1%	1%
Adj. Flow (vph)	19	1719	2006	12	4	16
Shared Lane Traffic (%)						
Lane Group Flow (vph)	19	1719	2018	0	20	0
Enter Blocked Intersection	No	No	No	No	No	No
Lane Alignment	Left	Left	Left	Right	Left	Right
Median Width(ft)		12	12		12	
Link Offset(ft)		0	0		0	
Crosswalk Width(ft)		16	16		16	
Two way Left Turn Lane						
Headway Factor	1.00	1.00	1.00	1.00	1.00	1.00
Turning Speed (mph)	15			9	15	9
Sign Control		Free	Free		Stop	

Intersection Summary	
Area Type:	Other
Control Type: Unsignalized	
Intersection Capacity Utilization 65.4%	ICU Level of Service C
Analysis Period (min) 15	

Lane Group	EBL	EBT	EBR	WBL	WBT	WBR	NBL	NBT	NBR	SBL	SBT	SBR
Lane Configurations												
Traffic Volume (vph)	21	207	57	12	456	14	122	50	5	11	83	124
Future Volume (vph)	21	207	57	12	456	14	122	50	5	11	83	124
Ideal Flow (vphpl)	1900	1900	1900	1900	1900	1900	1900	1900	1900	1900	1900	1900
Lane Util. Factor	1.00	1.00	1.00	1.00	1.00	1.00	1.00	1.00	1.00	1.00	1.00	1.00
Ped Bike Factor												
Frt		0.973			0.996			0.996			0.923	
Flt Protected		0.996			0.999			0.967			0.998	
Satd. Flow (prot)	0	1770	0	0	1853	0	0	1777	0	0	1651	0
Flt Permitted		0.996			0.999			0.967			0.998	
Satd. Flow (perm)	0	1770	0	0	1853	0	0	1777	0	0	1651	0
Link Speed (mph)		30			30			30			30	
Link Distance (ft)		175			3048			1367			1344	
Travel Time (s)		4.0			69.3			31.1			30.5	
Confl. Peds. (#/hr)							2		2	2		2
Peak Hour Factor	0.96	0.96	0.96	0.96	0.96	0.96	0.96	0.96	0.96	0.96	0.96	0.96
Heavy Vehicles (%)	4%	4%	4%	2%	2%	2%	3%	3%	3%	6%	6%	6%
Adj. Flow (vph)	22	216	59	13	475	15	127	52	5	11	86	129
Shared Lane Traffic (%)												
Lane Group Flow (vph)	0	297	0	0	503	0	0	184	0	0	226	0
Enter Blocked Intersection	No	No	No	No	No	No	No	No	No	No	No	No
Lane Alignment	Left	Left	Right	Left	Left	Right	Left	Left	Right	Left	Left	Right
Median Width(ft)		0			0			12			12	
Link Offset(ft)		0			0			0			0	
Crosswalk Width(ft)		16			16			16			16	
Two way Left Turn Lane												
Headway Factor	1.00	1.00	1.00	1.00	1.00	1.00	1.00	1.00	1.00	1.00	1.00	1.00
Turning Speed (mph)	15		9	15		9	15		9	15		9
Sign Control		Stop			Stop			Stop			Stop	

Intersection Summary	
Area Type:	Other
Control Type: Unsignalized	
Intersection Capacity Utilization 60.6%	ICU Level of Service B
Analysis Period (min) 15	

Lane Group	EBL	EBT	EBR	WBL	WBT	WBR	NBL	NBT	NBR	SBL	SBT	SBR
Lane Configurations												
Traffic Volume (vph)	63	1333	35	40	1429	105	54	22	43	74	27	67
Future Volume (vph)	63	1333	35	40	1429	105	54	22	43	74	27	67
Ideal Flow (vphpl)	1900	1900	1900	1900	1900	1900	1900	1900	1900	1900	1900	1900
Storage Length (ft)	100		0	45		0	0		0	0		0
Storage Lanes	1		0	1		0	0		0	0		1
Taper Length (ft)	25			25			25			25		
Lane Util. Factor	1.00	0.95	0.95	1.00	0.95	0.95	1.00	1.00	1.00	1.00	1.00	1.00
Ped Bike Factor		1.00			1.00			0.99				
Frt		0.996			0.990			0.951				0.850
Flt Protected	0.950			0.950				0.978			0.965	
Satd. Flow (prot)	1787	3555	0	1770	3487	0	0	1702	0	0	1780	1568
Flt Permitted	0.093			0.126				0.802			0.578	
Satd. Flow (perm)	175	3555	0	235	3487	0	0	1396	0	0	1066	1568
Right Turn on Red			Yes			Yes			Yes			Yes
Satd. Flow (RTOR)		3			9			12				53
Link Speed (mph)		30			30			30			30	
Link Distance (ft)		3163			226			1301			124	
Travel Time (s)		71.9			5.1			29.6			2.8	
Confl. Peds. (#/hr)	12		8	8		12			3	3		
Peak Hour Factor	0.92	0.92	0.92	0.92	0.92	0.92	0.92	0.92	0.92	0.92	0.92	0.92
Heavy Vehicles (%)	1%	1%	1%	2%	2%	2%	3%	3%	3%	3%	3%	3%
Adj. Flow (vph)	68	1449	38	43	1553	114	59	24	47	80	29	73
Shared Lane Traffic (%)												
Lane Group Flow (vph)	68	1487	0	43	1667	0	0	130	0	0	109	73
Enter Blocked Intersection	No	No	No	No	No	No	No	No	No	No	No	No
Lane Alignment	Left	Left	Right	Left	Left	Right	Left	Left	Right	Left	Left	Right
Median Width(ft)		12			12			0			0	
Link Offset(ft)		0			0			0			0	
Crosswalk Width(ft)		16			16			16			16	
Two way Left Turn Lane												
Headway Factor	1.00	1.00	1.00	1.00	1.00	1.00	1.00	1.00	1.00	1.00	1.00	1.00
Turning Speed (mph)	15		9	15		9	15		9	15		9
Number of Detectors	1	2		1	2		1	2		1	2	1
Detector Template	Left	Thru		Left	Thru		Left	Thru		Left	Thru	Right
Leading Detector (ft)	20	100		20	100		20	100		20	100	20
Trailing Detector (ft)	0	0		0	0		0	0		0	0	0
Detector 1 Position(ft)	0	0		0	0		0	0		0	0	0
Detector 1 Size(ft)	20	6		20	6		20	6		20	6	20
Detector 1 Type	Cl+Ex	Cl+Ex		Cl+Ex	Cl+Ex		Cl+Ex	Cl+Ex		Cl+Ex	Cl+Ex	Cl+Ex
Detector 1 Channel												
Detector 1 Extend (s)	0.0	0.0		0.0	0.0		0.0	0.0		0.0	0.0	0.0
Detector 1 Queue (s)	0.0	0.0		0.0	0.0		0.0	0.0		0.0	0.0	0.0
Detector 1 Delay (s)	0.0	0.0		0.0	0.0		0.0	0.0		0.0	0.0	0.0
Detector 2 Position(ft)		94			94			94			94	
Detector 2 Size(ft)		6			6			6			6	
Detector 2 Type		Cl+Ex			Cl+Ex			Cl+Ex			Cl+Ex	
Detector 2 Channel												
Detector 2 Extend (s)		0.0			0.0			0.0			0.0	

Lane Group	EBL	EBT	EBR	WBL	WBT	WBR	NBL	NBT	NBR	SBL	SBT	SBR
Turn Type	pm+pt	NA		pm+pt	NA		Perm	NA		pm+pt	NA	pm+ov
Protected Phases	1	6		5	2			4		3	8	1
Permitted Phases	6			2			4			8		8
Detector Phase	1	6		5	2		4	4		3	8	1
Switch Phase												
Minimum Initial (s)	5.0	7.0		5.0	7.0		7.0	7.0		5.0	7.0	5.0
Minimum Split (s)	11.0	29.0		11.0	29.0		24.0	24.0		11.0	13.0	11.0
Total Split (s)	13.0	139.0		13.0	139.0		26.0	26.0		12.0	38.0	13.0
Total Split (%)	6.8%	73.2%		6.8%	73.2%		13.7%	13.7%		6.3%	20.0%	6.8%
Maximum Green (s)	7.0	133.0		7.0	133.0		20.0	20.0		6.0	32.0	7.0
Yellow Time (s)	4.0	4.0		4.0	4.0		4.0	4.0		4.0	4.0	4.0
All-Red Time (s)	2.0	2.0		2.0	2.0		2.0	2.0		2.0	2.0	2.0
Lost Time Adjust (s)	0.0	0.0		0.0	0.0			0.0			0.0	0.0
Total Lost Time (s)	6.0	6.0		6.0	6.0			6.0			6.0	6.0
Lead/Lag	Lead	Lag		Lead	Lag		Lag	Lag		Lead		Lead
Lead-Lag Optimize?	Yes	Yes		Yes	Yes		Yes	Yes		Yes		Yes
Vehicle Extension (s)	3.0	1.0		3.0	1.0		2.5	2.5		3.0	2.5	3.0
Recall Mode	Max	C-Min		Max	C-Min		Max	Max		Max	Max	Max
Walk Time (s)		5.0			5.0		5.0	5.0				
Flash Dont Walk (s)		18.0			18.0		13.0	13.0				
Pedestrian Calls (#/hr)		0			0		0	0				
Act Effct Green (s)	140.0	133.0		140.0	133.0			20.0			32.0	45.0
Actuated g/C Ratio	0.74	0.70		0.74	0.70			0.11			0.17	0.24
v/c Ratio	0.36	0.60		0.19	0.68			0.83			0.54	0.18
Control Delay	10.9	15.9		7.2	18.1			111.6			81.7	21.0
Queue Delay	0.0	0.0		0.0	0.0			0.0			0.0	0.0
Total Delay	10.9	15.9		7.2	18.1			111.6			81.7	21.0
LOS	B	B		A	B			F			F	C
Approach Delay		15.7			17.8			111.6			57.3	
Approach LOS		B			B			F			E	

Intersection Summary	
Area Type:	Other
Cycle Length: 190	
Actuated Cycle Length: 190	
Offset: 103 (54%), Referenced to phase 2:WBTL and 6:EBTL, Start of Yellow	
Natural Cycle: 90	
Control Type: Actuated-Coordinated	
Maximum v/c Ratio: 0.83	
Intersection Signal Delay: 22.3	Intersection LOS: C
Intersection Capacity Utilization 77.1%	ICU Level of Service D
Analysis Period (min) 15	

Splits and Phases: 4: SW 70th Ave & SW 8th St

Lane Group	EBL	EBT	EBR	WBL	WBT	WBR	NBL	NBT	NBR	SBL	SBT	SBR
Lane Configurations												
Traffic Volume (vph)	44	1408	15	7	1377	23	9	6	26	5	8	96
Future Volume (vph)	44	1408	15	7	1377	23	9	6	26	5	8	96
Ideal Flow (vphpl)	1900	1900	1900	1900	1900	1900	1900	1900	1900	1900	1900	1900
Storage Length (ft)	0		0	50		0	0		0	150		0
Storage Lanes	1		0	1		0	0		0	1		0
Taper Length (ft)	25			25			25			25		
Lane Util. Factor	1.00	0.95	0.95	1.00	0.95	0.95	1.00	1.00	1.00	1.00	1.00	1.00
Ped Bike Factor												
Frt		0.998			0.998			0.915			0.862	
Flt Protected	0.950			0.950				0.989		0.950		
Satd. Flow (prot)	1770	3532	0	1770	3532	0	0	1653	0	1736	1575	0
Flt Permitted	0.950			0.950				0.989		0.950		
Satd. Flow (perm)	1770	3532	0	1770	3532	0	0	1653	0	1736	1575	0
Link Speed (mph)		30			30			30			30	
Link Distance (ft)		172			4245			1304			1367	
Travel Time (s)		3.9			96.5			29.6			31.1	
Confl. Peds. (#/hr)	3		5	5		3	3		2	2		3
Peak Hour Factor	0.89	0.89	0.89	0.89	0.89	0.89	0.89	0.89	0.89	0.89	0.89	0.89
Heavy Vehicles (%)	2%	2%	2%	2%	2%	2%	4%	4%	4%	4%	4%	4%
Adj. Flow (vph)	49	1582	17	8	1547	26	10	7	29	6	9	108
Shared Lane Traffic (%)												
Lane Group Flow (vph)	49	1599	0	8	1573	0	0	46	0	6	117	0
Enter Blocked Intersection	No	No	No	No	No	No	No	No	No	No	No	No
Lane Alignment	Left	Left	Right	Left	Left	Right	Left	Left	Right	Left	Left	Right
Median Width(ft)		12			12			12			12	
Link Offset(ft)		0			0			0			0	
Crosswalk Width(ft)		16			16			16			16	
Two way Left Turn Lane												
Headway Factor	1.00	1.00	1.00	1.00	1.00	1.00	1.00	1.00	1.00	1.00	1.00	1.00
Turning Speed (mph)	15		9	15		9	15		9	15		9
Sign Control		Free			Free			Stop			Stop	

Intersection Summary	
Area Type:	Other
Control Type: Unsignalized	
Intersection Capacity Utilization 55.6%	ICU Level of Service B
Analysis Period (min) 15	

Lane Group	EBL	EBT	EBR	WBL	WBT	WBR	NBL	NBT	NBR	SBL	SBT	SBR
Lane Configurations												
Traffic Volume (vph)	9	80	9	7	273	9	13	14	3	3	36	40
Future Volume (vph)	9	80	9	7	273	9	13	14	3	3	36	40
Ideal Flow (vphpl)	1900	1900	1900	1900	1900	1900	1900	1900	1900	1900	1900	1900
Lane Util. Factor	1.00	1.00	1.00	1.00	1.00	1.00	1.00	1.00	1.00	1.00	1.00	1.00
Ped Bike Factor												
Frt		0.987			0.996			0.987			0.931	
Flt Protected		0.995			0.999			0.979			0.998	
Satd. Flow (prot)	0	1812	0	0	1853	0	0	1800	0	0	1650	0
Flt Permitted		0.995			0.999			0.979			0.998	
Satd. Flow (perm)	0	1812	0	0	1853	0	0	1800	0	0	1650	0
Link Speed (mph)		30			30			30			30	
Link Distance (ft)		1218			191			1295			1301	
Travel Time (s)		27.7			4.3			29.4			29.6	
Confl. Peds. (#/hr)	5		6	6		5						
Peak Hour Factor	0.94	0.94	0.94	0.94	0.94	0.94	0.94	0.94	0.94	0.94	0.94	0.94
Heavy Vehicles (%)	3%	3%	3%	2%	2%	2%	2%	2%	2%	7%	7%	7%
Adj. Flow (vph)	10	85	10	7	290	10	14	15	3	3	38	43
Shared Lane Traffic (%)												
Lane Group Flow (vph)	0	105	0	0	307	0	0	32	0	0	84	0
Enter Blocked Intersection	No	No	No	No	No	No	No	No	No	No	No	No
Lane Alignment	Left	Left	Right	Left	Left	Right	Left	Left	Right	Left	Left	Right
Median Width(ft)		0			0			0			0	
Link Offset(ft)		0			0			0			0	
Crosswalk Width(ft)		16			16			16			16	
Two way Left Turn Lane												
Headway Factor	1.00	1.00	1.00	1.00	1.00	1.00	1.00	1.00	1.00	1.00	1.00	1.00
Turning Speed (mph)	15		9	15		9	15		9	15		9
Sign Control		Stop			Stop			Stop			Stop	

Intersection Summary	
Area Type:	Other
Control Type: Unsignalized	
Intersection Capacity Utilization 30.6%	ICU Level of Service A
Analysis Period (min) 15	

Lane Group	EBL	EBT	EBR	WBL	WBT	WBR	NBL	NBT	NBR	SBL	SBT	SBR
Lane Configurations												
Traffic Volume (vph)	7	70	12	32	258	38	14	53	14	14	59	16
Future Volume (vph)	7	70	12	32	258	38	14	53	14	14	59	16
Ideal Flow (vphpl)	1900	1900	1900	1900	1900	1900	1900	1900	1900	1900	1900	1900
Lane Util. Factor	1.00	1.00	1.00	1.00	1.00	1.00	1.00	1.00	1.00	1.00	1.00	1.00
Ped Bike Factor												
Frt		0.981			0.984			0.976			0.976	
Flt Protected		0.996			0.995			0.991			0.992	
Satd. Flow (prot)	0	1838	0	0	1824	0	0	1784	0	0	1803	0
Flt Permitted		0.996			0.995			0.991			0.992	
Satd. Flow (perm)	0	1838	0	0	1824	0	0	1784	0	0	1803	0
Link Speed (mph)		30			30			30			30	
Link Distance (ft)		194			1122			681			1304	
Travel Time (s)		4.4			25.5			15.5			29.6	
Confl. Peds. (#/hr)	2		2	2		2			2	2		
Peak Hour Factor	0.94	0.94	0.94	0.94	0.94	0.94	0.94	0.94	0.94	0.94	0.94	0.94
Heavy Vehicles (%)	1%	1%	1%	2%	2%	2%	3%	3%	3%	2%	2%	2%
Adj. Flow (vph)	7	74	13	34	274	40	15	56	15	15	63	17
Shared Lane Traffic (%)												
Lane Group Flow (vph)	0	94	0	0	348	0	0	86	0	0	95	0
Enter Blocked Intersection	No	No	No	No	No	No	No	No	No	No	No	No
Lane Alignment	Left	Left	Right	Left	Left	Right	Left	Left	Right	Left	Left	Right
Median Width(ft)		0			0			0			0	
Link Offset(ft)		0			0			0			0	
Crosswalk Width(ft)		16			16			16			16	
Two way Left Turn Lane												
Headway Factor	1.00	1.00	1.00	1.00	1.00	1.00	1.00	1.00	1.00	1.00	1.00	1.00
Turning Speed (mph)	15		9	15		9	15		9	15		9
Sign Control		Free			Free			Stop			Stop	

Intersection Summary	
Area Type:	Other
Control Type: Unsignalized	
Intersection Capacity Utilization 37.6%	ICU Level of Service A
Analysis Period (min) 15	

Lane Group	EBL	EBT	EBR	WBL	WBT	WBR	NBL	NBT	NBR	SBL	SBT	SBR
Lane Configurations												
Traffic Volume (vph)	1	138	12	105	465	27	14	36	66	19	47	13
Future Volume (vph)	1	138	12	105	465	27	14	36	66	19	47	13
Ideal Flow (vphpl)	1900	1900	1900	1900	1900	1900	1900	1900	1900	1900	1900	1900
Lane Util. Factor	1.00	1.00	1.00	1.00	1.00	1.00	1.00	1.00	1.00	1.00	1.00	1.00
Ped Bike Factor		1.00			1.00			1.00			1.00	
Frt		0.989			0.994			0.924			0.977	
Flt Protected					0.991			0.994			0.988	
Satd. Flow (prot)	0	1857	0	0	1853	0	0	1711	0	0	1792	0
Flt Permitted		0.998			0.914			0.942			0.908	
Satd. Flow (perm)	0	1853	0	0	1709	0	0	1621	0	0	1646	0
Right Turn on Red			Yes			Yes			Yes			Yes
Satd. Flow (RTOR)		10			5			69			14	
Link Speed (mph)		30			30			30			30	
Link Distance (ft)		3560			156			188			1295	
Travel Time (s)		80.9			3.5			4.3			29.4	
Confl. Peds. (#/hr)			2	2			1					1
Peak Hour Factor	0.95	0.95	0.95	0.95	0.95	0.95	0.95	0.95	0.95	0.95	0.95	0.95
Heavy Vehicles (%)	1%	1%	1%	1%	1%	1%	2%	2%	2%	2%	2%	2%
Adj. Flow (vph)	1	145	13	111	489	28	15	38	69	20	49	14
Shared Lane Traffic (%)												
Lane Group Flow (vph)	0	159	0	0	628	0	0	122	0	0	83	0
Enter Blocked Intersection	No	No	No	No	No	No	No	No	No	No	No	No
Lane Alignment	Left	Left	Right	Left	Left	Right	Left	Left	Right	Left	Left	Right
Median Width(ft)		0			0			0			0	
Link Offset(ft)		0			0			0			0	
Crosswalk Width(ft)		16			16			16			16	
Two way Left Turn Lane												
Headway Factor	1.00	1.00	1.00	1.00	1.00	1.00	1.00	1.00	1.00	1.00	1.00	1.00
Turning Speed (mph)	15		9	15		9	15		9	15		9
Number of Detectors	1	2		1	2		1	2		1	2	
Detector Template	Left	Thru		Left	Thru		Left	Thru		Left	Thru	
Leading Detector (ft)	20	100		20	100		20	100		20	100	
Trailing Detector (ft)	0	0		0	0		0	0		0	0	
Detector 1 Position(ft)	0	0		0	0		0	0		0	0	
Detector 1 Size(ft)	20	6		20	6		20	6		20	6	
Detector 1 Type	Cl+Ex	Cl+Ex		Cl+Ex	Cl+Ex		Cl+Ex	Cl+Ex		Cl+Ex	Cl+Ex	
Detector 1 Channel												
Detector 1 Extend (s)	0.0	0.0		0.0	0.0		0.0	0.0		0.0	0.0	
Detector 1 Queue (s)	0.0	0.0		0.0	0.0		0.0	0.0		0.0	0.0	
Detector 1 Delay (s)	0.0	0.0		0.0	0.0		0.0	0.0		0.0	0.0	
Detector 2 Position(ft)		94			94			94			94	
Detector 2 Size(ft)		6			6			6			6	
Detector 2 Type		Cl+Ex			Cl+Ex			Cl+Ex			Cl+Ex	
Detector 2 Channel												
Detector 2 Extend (s)		0.0			0.0			0.0			0.0	
Turn Type	Perm	NA		Perm	NA		Perm	NA		Perm	NA	
Protected Phases		2			6			4			8	
Permitted Phases	2			6			4			8		

Lane Group	EBL	EBT	EBR	WBL	WBT	WBR	NBL	NBT	NBR	SBL	SBT	SBR
Detector Phase	2	2		6	6		4	4		8	8	
Switch Phase												
Minimum Initial (s)	12.0	12.0		12.0	12.0		7.0	7.0		7.0	7.0	
Minimum Split (s)	18.0	18.0		18.0	18.0		17.0	17.0		13.0	13.0	
Total Split (s)	36.0	36.0		36.0	36.0		26.0	26.0		26.0	26.0	
Total Split (%)	58.1%	58.1%		58.1%	58.1%		41.9%	41.9%		41.9%	41.9%	
Maximum Green (s)	30.0	30.0		30.0	30.0		20.0	20.0		20.0	20.0	
Yellow Time (s)	4.0	4.0		4.0	4.0		4.0	4.0		4.0	4.0	
All-Red Time (s)	2.0	2.0		2.0	2.0		2.0	2.0		2.0	2.0	
Lost Time Adjust (s)		0.0			0.0			0.0			0.0	
Total Lost Time (s)		6.0			6.0			6.0			6.0	
Lead/Lag												
Lead-Lag Optimize?												
Vehicle Extension (s)	1.0	1.0		1.0	1.0		2.5	2.5		2.5	2.5	
Recall Mode	Max	Max		None	None		None	None		None	None	
Walk Time (s)							1.0	1.0				
Flash Dont Walk (s)							10.0	10.0				
Pedestrian Calls (#/hr)							0	0				
Act Effct Green (s)		34.2			34.2			7.8			7.8	
Actuated g/C Ratio		0.68			0.68			0.16			0.16	
v/c Ratio		0.13			0.54			0.39			0.31	
Control Delay		4.5			8.2			14.0			19.4	
Queue Delay		0.0			0.0			0.0			0.0	
Total Delay		4.5			8.2			14.0			19.4	
LOS		A			A			B			B	
Approach Delay		4.5			8.2			14.0			19.4	
Approach LOS		A			A			B			B	

Intersection Summary	
Area Type:	Other
Cycle Length: 62	
Actuated Cycle Length: 50.2	
Natural Cycle: 50	
Control Type: Actuated-Uncoordinated	
Maximum v/c Ratio: 0.54	
Intersection Signal Delay: 9.3	Intersection LOS: A
Intersection Capacity Utilization 64.5%	ICU Level of Service C
Analysis Period (min) 15	

Splits and Phases: 8: SW 16th St & SW 70th Ave

Lane Group	EBL	EBT	EBR	WBL	WBT	WBR	NBL	NBT	NBR	SBL	SBT	SBR
Lane Configurations												
Traffic Volume (vph)	16	1397	12	12	1300	24	13	3	6	13	0	9
Future Volume (vph)	16	1397	12	12	1300	24	13	3	6	13	0	9
Ideal Flow (vphpl)	1900	1900	1900	1900	1900	1900	1900	1900	1900	1900	1900	1900
Storage Length (ft)	0		0	0		65	0		0	0		0
Storage Lanes	1		0	0		1	0		0	0		0
Taper Length (ft)	25			25			25			25		
Lane Util. Factor	1.00	0.95	0.95	0.91	0.91	1.00	1.00	1.00	1.00	1.00	1.00	1.00
Ped Bike Factor	1.00	1.00				0.96		1.00			1.00	
Frt		0.999				0.850		0.965			0.944	
Flt Protected	0.950							0.970			0.972	
Satd. Flow (prot)	1770	3535	0	0	5085	1583	0	1703	0	0	1709	0
Flt Permitted	0.950				0.940			0.875			0.838	
Satd. Flow (perm)	1765	3535	0	0	4780	1525	0	1536	0	0	1470	0
Right Turn on Red			Yes			Yes			Yes			Yes
Satd. Flow (RTOR)		1				93		6			169	
Link Speed (mph)		30			30			30			30	
Link Distance (ft)		190			193			454			534	
Travel Time (s)		4.3			4.4			10.3			12.1	
Confl. Peds. (#/hr)	3		2	2		3			1	1		
Peak Hour Factor	0.94	0.94	0.94	0.94	0.94	0.94	0.94	0.94	0.94	0.94	0.94	0.94
Heavy Vehicles (%)	2%	2%	2%	2%	2%	2%	4%	4%	4%	2%	2%	2%
Adj. Flow (vph)	17	1486	13	13	1383	26	14	3	6	14	0	10
Shared Lane Traffic (%)												
Lane Group Flow (vph)	17	1499	0	0	1396	26	0	23	0	0	24	0
Enter Blocked Intersection	No	No	No	No	No	No	No	No	No	No	No	No
Lane Alignment	Left	Left	Right	Left	Left	Right	Left	Left	Right	Left	Left	Right
Median Width(ft)		12			12			0			0	
Link Offset(ft)		0			0			0			0	
Crosswalk Width(ft)		16			16			16			16	
Two way Left Turn Lane												
Headway Factor	1.00	1.00	1.00	1.00	1.00	1.00	1.00	1.00	1.00	1.00	1.00	1.00
Turning Speed (mph)	15		9	15		9	15		9	15		9
Number of Detectors	1	2		1	2	1	1	2		1	2	
Detector Template	Left	Thru		Left	Thru	Right	Left	Thru		Left	Thru	
Leading Detector (ft)	20	100		20	100	20	20	100		20	100	
Trailing Detector (ft)	0	0		0	0	0	0	0		0	0	
Detector 1 Position(ft)	0	0		0	0	0	0	0		0	0	
Detector 1 Size(ft)	20	6		20	6	20	20	6		20	6	
Detector 1 Type	Cl+Ex	Cl+Ex		Cl+Ex	Cl+Ex	Cl+Ex	Cl+Ex	Cl+Ex		Cl+Ex	Cl+Ex	
Detector 1 Channel												
Detector 1 Extend (s)	0.0	0.0		0.0	0.0	0.0	0.0	0.0		0.0	0.0	
Detector 1 Queue (s)	0.0	0.0		0.0	0.0	0.0	0.0	0.0		0.0	0.0	
Detector 1 Delay (s)	0.0	0.0		0.0	0.0	0.0	0.0	0.0		0.0	0.0	
Detector 2 Position(ft)		94			94			94			94	
Detector 2 Size(ft)		6			6			6			6	
Detector 2 Type		Cl+Ex			Cl+Ex			Cl+Ex			Cl+Ex	
Detector 2 Channel												
Detector 2 Extend (s)		0.0			0.0			0.0			0.0	

Lane Group	Ø1	Ø2	Ø4	Ø5	Ø6	Ø8	Ø9	Ø13
Lane Configurations								
Traffic Volume (vph)								
Future Volume (vph)								
Ideal Flow (vphpl)								
Storage Length (ft)								
Storage Lanes								
Taper Length (ft)								
Lane Util. Factor								
Ped Bike Factor								
Frt								
Flt Protected								
Satd. Flow (prot)								
Flt Permitted								
Satd. Flow (perm)								
Right Turn on Red								
Satd. Flow (RTOR)								
Link Speed (mph)								
Link Distance (ft)								
Travel Time (s)								
Confl. Peds. (#/hr)								
Peak Hour Factor								
Heavy Vehicles (%)								
Adj. Flow (vph)								
Shared Lane Traffic (%)								
Lane Group Flow (vph)								
Enter Blocked Intersection								
Lane Alignment								
Median Width(ft)								
Link Offset(ft)								
Crosswalk Width(ft)								
Two way Left Turn Lane								
Headway Factor								
Turning Speed (mph)								
Number of Detectors								
Detector Template								
Leading Detector (ft)								
Trailing Detector (ft)								
Detector 1 Position(ft)								
Detector 1 Size(ft)								
Detector 1 Type								
Detector 1 Channel								
Detector 1 Extend (s)								
Detector 1 Queue (s)								
Detector 1 Delay (s)								
Detector 2 Position(ft)								
Detector 2 Size(ft)								
Detector 2 Type								
Detector 2 Channel								
Detector 2 Extend (s)								

Lane Group	EBL	EBT	EBR	WBL	WBT	WBR	NBL	NBT	NBR	SBL	SBT	SBR
Turn Type	Prot	NA		Prot	NA	Perm	Perm	NA		Perm	NA	
Protected Phases	1 13	6 13		5 8!	2 8!			3!			7	
Permitted Phases						2 8	3!			7		
Detector Phase	1 13	6 13		5 8	2 8	2 8	3	3		7	7	
Switch Phase												
Minimum Initial (s)							7.0	7.0		5.0	5.0	
Minimum Split (s)							13.0	13.0		10.7	10.7	
Total Split (s)							17.0	17.0		20.0	20.0	
Total Split (%)							9.4%	9.4%		11.1%	11.1%	
Maximum Green (s)							11.0	11.0		14.3	14.3	
Yellow Time (s)							4.0	4.0		3.7	3.7	
All-Red Time (s)							2.0	2.0		2.0	2.0	
Lost Time Adjust (s)								0.0			0.0	
Total Lost Time (s)								6.0			5.7	
Lead/Lag							Lead	Lead		Lead	Lead	
Lead-Lag Optimize?							Yes	Yes		Yes	Yes	
Vehicle Extension (s)							2.5	2.5		2.0	2.0	
Recall Mode							Max	Max		Max	Max	
Walk Time (s)												
Flash Dont Walk (s)												
Pedestrian Calls (#/hr)												
Act Effct Green (s)	60.2	91.3			85.1	85.1		46.3			16.6	
Actuated g/C Ratio	0.33	0.51			0.47	0.47		0.26			0.09	
v/c Ratio	0.03	0.84			0.69	0.03		0.06			0.08	
Control Delay	52.1	42.9			36.1	0.1		41.6			0.6	
Queue Delay	0.0	49.4			0.0	0.0		0.0			0.0	
Total Delay	52.1	92.4			36.1	0.1		41.6			0.6	
LOS	D	F			D	A		D			A	
Approach Delay		91.9			35.4			41.6			0.6	
Approach LOS		F			D			D			A	

Intersection Summary

Area Type: Other
Cycle Length: 180
Actuated Cycle Length: 180
Offset: 160 (89%), Referenced to phase 2:WBT and 6:EBT, Start of Yellow
Natural Cycle: 90
Control Type: Actuated-Coordinated
Maximum v/c Ratio: 0.84
Intersection Signal Delay: 63.9 Intersection LOS: E
Intersection Capacity Utilization 73.8% ICU Level of Service D
Analysis Period (min) 15
! Phase conflict between lane groups.

Splits and Phases: 9: Driveway/SW 70th Ct & SW 24th St

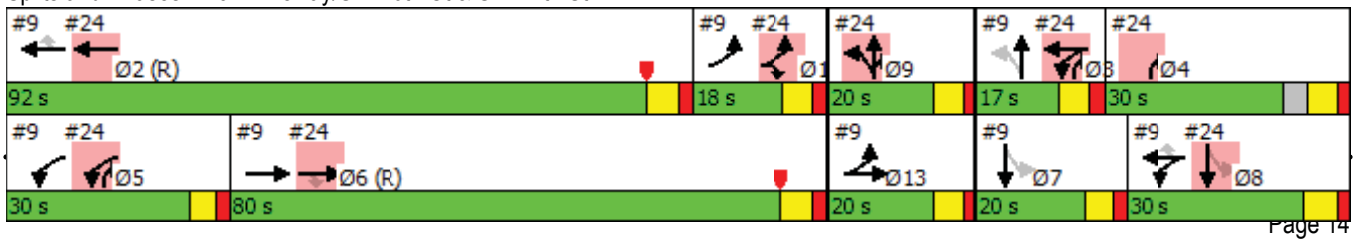

Lane Group	Ø1	Ø2	Ø4	Ø5	Ø6	Ø8	Ø9	Ø13
Turn Type								
Protected Phases	1	2	4	5	6	8	9	13
Permitted Phases								
Detector Phase								
Switch Phase								
Minimum Initial (s)	5.0	7.0	5.0	5.0	7.0	7.0	7.0	7.0
Minimum Split (s)	11.0	22.4	24.0	10.7	27.4	27.4	13.0	13.0
Total Split (s)	18.0	92.0	30.0	30.0	80.0	30.0	20.0	20.0
Total Split (%)	10%	51%	17%	17%	44%	17%	11%	11%
Maximum Green (s)	12.0	85.6	24.0	24.3	73.6	23.6	14.0	14.0
Yellow Time (s)	4.0	4.4	4.0	3.7	4.4	4.4	4.0	4.0
All-Red Time (s)	2.0	2.0	2.0	2.0	2.0	2.0	2.0	2.0
Lost Time Adjust (s)								
Total Lost Time (s)								
Lead/Lag	Lag	Lead	Lag	Lead	Lag	Lag		
Lead-Lag Optimize?	Yes	Yes	Yes	Yes	Yes	Yes		
Vehicle Extension (s)	3.0	1.0	3.0	3.0	1.0	1.0	1.0	1.0
Recall Mode	Max	C-Min	None	Max	C-Max	None	None	None
Walk Time (s)		7.0	7.0		7.0	7.0		
Flash Dont Walk (s)		9.0	11.0		14.0	14.0		
Pedestrian Calls (#/hr)		0	0		0	0		
Act Effct Green (s)								
Actuated g/C Ratio								
v/c Ratio								
Control Delay								
Queue Delay								
Total Delay								
LOS								
Approach Delay								
Approach LOS								

Intersection Summary

Lane Group	EBL	EBT	EBR	WBL	WBT	WBR	NBL	NBT	NBR	SBL	SBT	SBR
Lane Configurations												
Traffic Volume (vph)	56	1347	56	12	1125	84	44	8	20	8	6	26
Future Volume (vph)	56	1347	56	12	1125	84	44	8	20	8	6	26
Ideal Flow (vphpl)	1900	1900	1900	1900	1900	1900	1900	1900	1900	1900	1900	1900
Storage Length (ft)	0		80	0		100	0		0	0		0
Storage Lanes	0		1	0		1	0		0	0		0
Taper Length (ft)	25			25			25			25		
Lane Util. Factor	0.95	0.95	1.00	0.95	0.95	1.00	1.00	1.00	1.00	1.00	1.00	1.00
Ped Bike Factor												
Frt			0.850			0.850		0.962			0.911	
Flt Protected		0.998			0.999			0.970			0.990	
Satd. Flow (prot)	0	3532	1583	0	3536	1583	0	1755	0	0	1697	0
Flt Permitted		0.998			0.999			0.970			0.990	
Satd. Flow (perm)	0	3532	1583	0	3536	1583	0	1755	0	0	1697	0
Link Speed (mph)		30			30			30			30	
Link Distance (ft)		243			5738			2923			238	
Travel Time (s)		5.5			130.4			66.4			5.4	
Confl. Peds. (#/hr)	1		4	4		1			1	1		
Peak Hour Factor	0.96	0.96	0.96	0.96	0.96	0.96	0.96	0.96	0.96	0.96	0.96	0.96
Heavy Vehicles (%)	2%	2%	2%	2%	2%	2%	1%	1%	1%	1%	1%	1%
Adj. Flow (vph)	58	1403	58	13	1172	88	46	8	21	8	6	27
Shared Lane Traffic (%)												
Lane Group Flow (vph)	0	1461	58	0	1185	88	0	75	0	0	41	0
Enter Blocked Intersection	No	No	No	No	No	No	No	No	No	No	No	No
Lane Alignment	Left	Left	Right	Left	Left	Right	Left	Left	Right	Left	Left	Right
Median Width(ft)		0			0			0			0	
Link Offset(ft)		0			0			0			0	
Crosswalk Width(ft)		16			16			16			16	
Two way Left Turn Lane												
Headway Factor	1.00	1.00	1.00	1.00	1.00	1.00	1.00	1.00	1.00	1.00	1.00	1.00
Turning Speed (mph)	15		9	15		9	15		9	15		9
Sign Control		Free			Free			Stop			Stop	

Intersection Summary			
Area Type:	Other		
Control Type: Unsignalized			
Intersection Capacity Utilization 90.6%		ICU Level of Service E	
Analysis Period (min) 15			

Lane Group	EBL	EBT	EBR	WBL	WBT	WBR	NBL	NBT	NBR	SBL	SBT	SBR
Lane Configurations												
Traffic Volume (vph)	4	1963	12	19	1764	4	0	0	0	1	0	0
Future Volume (vph)	4	1963	12	19	1764	4	0	0	0	1	0	0
Ideal Flow (vphpl)	1900	1900	1900	1900	1900	1900	1900	1900	1900	1900	1900	1900
Storage Length (ft)	50		0	50		0	0		0	0		90
Storage Lanes	1		0	0		0	0		0	1		1
Taper Length (ft)	25			25			25			25		
Lane Util. Factor	1.00	0.91	0.91	0.91	0.91	0.91	1.00	1.00	1.00	1.00	1.00	1.00
Ped Bike Factor												
Frt		0.999										
Flt Protected	0.950				0.999					0.950		
Satd. Flow (prot)	1770	5080	0	0	5080	0	0	1863	0	1433	0	1508
Flt Permitted	0.950				0.999					0.950		
Satd. Flow (perm)	1770	5080	0	0	5080	0	0	1863	0	1433	0	1508
Link Speed (mph)		30			30			30			30	
Link Distance (ft)		1738			387			230			477	
Travel Time (s)		39.5			8.8			5.2			10.8	
Confl. Peds. (#/hr)	1		4	4		1			1	1		
Peak Hour Factor	0.90	0.90	0.90	0.90	0.90	0.90	0.90	0.90	0.90	0.90	0.90	0.90
Heavy Vehicles (%)	2%	2%	2%	2%	2%	2%	2%	2%	2%	26%	2%	26%
Adj. Flow (vph)	4	2181	13	21	1960	4	0	0	0	1	0	0
Shared Lane Traffic (%)												
Lane Group Flow (vph)	4	2194	0	0	1985	0	0	0	0	1	0	0
Enter Blocked Intersection	No	No	No	No	No	No	No	No	No	No	No	No
Lane Alignment	Left	Left	Right	Left	Left	Right	Left	Left	Right	Left	Left	Right
Median Width(ft)		12			12			12			12	
Link Offset(ft)		0			0			0			0	
Crosswalk Width(ft)		16			16			16			16	
Two way Left Turn Lane												
Headway Factor	1.00	1.00	1.00	1.00	1.00	1.00	1.00	1.00	1.00	1.00	1.00	1.00
Turning Speed (mph)	15		9	15		9	15		9	15		9
Sign Control		Free			Free			Stop			Stop	

Intersection Summary	
Area Type:	Other
Control Type: Unsignalized	
Intersection Capacity Utilization 57.7%	ICU Level of Service B
Analysis Period (min) 15	

Lane Group	EBL	EBT	EBR	WBL	WBT	WBR	NBL	NBT	NBR	SBL	SBT	SBR
Lane Configurations												
Traffic Volume (vph)	49	1486	197	23	1878	4	0	0	63	0	0	98
Future Volume (vph)	49	1486	197	23	1878	4	0	0	63	0	0	98
Ideal Flow (vphpl)	1900	1900	1900	1900	1900	1900	1900	1900	1900	1900	1900	1900
Storage Length (ft)	0		0	120		0	0		0	0		0
Storage Lanes	1		0	1		0	0		1	0		1
Taper Length (ft)	25			25			25			25		
Lane Util. Factor	1.00	0.91	0.91	1.00	0.91	0.91	1.00	1.00	1.00	1.00	1.00	1.00
Ped Bike Factor												
Frt		0.982							0.865			0.865
Flt Protected	0.950			0.950								
Satd. Flow (prot)	1770	4994	0	1770	5085	0	0	0	1611	0	0	1611
Flt Permitted	0.950			0.950								
Satd. Flow (perm)	1770	4994	0	1770	5085	0	0	0	1611	0	0	1611
Link Speed (mph)		30			30			30			30	
Link Distance (ft)		134			4054			653			1966	
Travel Time (s)		3.0			92.1			14.8			44.7	
Confl. Peds. (#/hr)			1	1			7					7
Peak Hour Factor	0.93	0.93	0.93	0.93	0.93	0.93	0.93	0.93	0.93	0.93	0.93	0.93
Adj. Flow (vph)	53	1598	212	25	2019	4	0	0	68	0	0	105
Shared Lane Traffic (%)												
Lane Group Flow (vph)	53	1810	0	25	2023	0	0	0	68	0	0	105
Enter Blocked Intersection	No	No	No	No	No	No	No	No	No	No	No	No
Lane Alignment	Left	Left	Right	Left	Left	Right	Left	Left	Right	Left	Left	Right
Median Width(ft)		12			12			0			0	
Link Offset(ft)		0			0			0			0	
Crosswalk Width(ft)		16			16			16			16	
Two way Left Turn Lane												
Headway Factor	1.00	1.00	1.00	1.00	1.00	1.00	1.00	1.00	1.00	1.00	1.00	1.00
Turning Speed (mph)	15		9	15		9	15		9	15		9
Sign Control		Free			Free			Stop			Stop	

Intersection Summary	
Area Type:	Other
Control Type: Unsignalized	
Intersection Capacity Utilization 51.2%	ICU Level of Service A
Analysis Period (min) 15	

Lane Group	EBT	EBR	WBL	WBT	NBL	NBR
Lane Configurations						
Traffic Volume (vph)	850	24	16	1509	14	16
Future Volume (vph)	850	24	16	1509	14	16
Ideal Flow (vphpl)	1900	1900	1900	1900	1900	1900
Storage Length (ft)		0	80		0	0
Storage Lanes		0	1		1	0
Taper Length (ft)			25		25	
Lane Util. Factor	0.95	0.95	1.00	0.95	1.00	1.00
Ped Bike Factor						
Frt	0.996				0.928	
Flt Protected			0.950		0.977	
Satd. Flow (prot)	3525	0	1770	3539	1706	0
Flt Permitted			0.950		0.977	
Satd. Flow (perm)	3525	0	1770	3539	1706	0
Link Speed (mph)	30			30	30	
Link Distance (ft)	2216			231	1151	
Travel Time (s)	50.4			5.3	26.2	
Confl. Peds. (#/hr)		4	4			2
Peak Hour Factor	0.97	0.97	0.97	0.97	0.97	0.97
Heavy Vehicles (%)	2%	2%	2%	2%	1%	1%
Adj. Flow (vph)	876	25	16	1556	14	16
Shared Lane Traffic (%)						
Lane Group Flow (vph)	901	0	16	1556	30	0
Enter Blocked Intersection	No	No	No	No	No	No
Lane Alignment	Left	Right	Left	Left	Left	Right
Median Width(ft)	12			12	12	
Link Offset(ft)	0			0	0	
Crosswalk Width(ft)	16			16	16	
Two way Left Turn Lane						
Headway Factor	1.00	1.00	1.00	1.00	1.00	1.00
Turning Speed (mph)		9	15		15	9
Sign Control	Free			Free	Stop	

Intersection Summary	
Area Type:	Other
Control Type: Unsignalized	
Intersection Capacity Utilization 52.4%	ICU Level of Service A
Analysis Period (min) 15	

Lane Group	EBT	EBR	WBL	WBT	NBL	NBR
Lane Configurations						
Traffic Volume (vph)	858	3	23	1538	4	19
Future Volume (vph)	858	3	23	1538	4	19
Ideal Flow (vphpl)	1900	1900	1900	1900	1900	1900
Storage Length (ft)		0	80		0	0
Storage Lanes		0	1		1	0
Taper Length (ft)			25		25	
Lane Util. Factor	0.95	0.95	1.00	0.95	1.00	1.00
Ped Bike Factor						
Frt	0.999				0.887	
Flt Protected			0.950		0.992	
Satd. Flow (prot)	3536	0	1770	3539	1623	0
Flt Permitted			0.950		0.992	
Satd. Flow (perm)	3536	0	1770	3539	1623	0
Link Speed (mph)	30			30	30	
Link Distance (ft)	228			2182	751	
Travel Time (s)	5.2			49.6	17.1	
Confl. Peds. (#/hr)		3	3			
Peak Hour Factor	0.97	0.97	0.97	0.97	0.97	0.97
Heavy Vehicles (%)	2%	2%	2%	2%	3%	3%
Adj. Flow (vph)	885	3	24	1586	4	20
Shared Lane Traffic (%)						
Lane Group Flow (vph)	888	0	24	1586	24	0
Enter Blocked Intersection	No	No	No	No	No	No
Lane Alignment	Left	Right	Left	Left	Left	Right
Median Width(ft)	12			12	12	
Link Offset(ft)	0			0	0	
Crosswalk Width(ft)	16			16	16	
Two way Left Turn Lane						
Headway Factor	1.00	1.00	1.00	1.00	1.00	1.00
Turning Speed (mph)		9	15		15	9
Sign Control	Free			Free	Stop	

Intersection Summary	
Area Type:	Other
Control Type: Unsignalized	
Intersection Capacity Utilization 52.5%	ICU Level of Service A
Analysis Period (min) 15	

Lane Group	EBL	EBT	WBT	WBR	SBL	SBR
Lane Configurations						
Traffic Volume (vph)	15	872	1736	4	3	54
Future Volume (vph)	15	872	1736	4	3	54
Ideal Flow (vphpl)	1900	1900	1900	1900	1900	1900
Storage Length (ft)	135			0	0	0
Storage Lanes	1			0	1	0
Taper Length (ft)	25				25	
Lane Util. Factor	1.00	0.95	0.95	0.95	1.00	1.00
Ped Bike Factor						
Frt					0.872	
Flt Protected	0.950				0.997	
Satd. Flow (prot)	1787	3574	3574	0	1635	0
Flt Permitted	0.950				0.997	
Satd. Flow (perm)	1787	3574	3574	0	1635	0
Link Speed (mph)		30	30		30	
Link Distance (ft)		401	7150		2598	
Travel Time (s)		9.1	162.5		59.0	
Confl. Peds. (#/hr)	1			1		
Peak Hour Factor	0.98	0.98	0.98	0.98	0.98	0.98
Heavy Vehicles (%)	1%	1%	1%	1%	1%	1%
Adj. Flow (vph)	15	890	1771	4	3	55
Shared Lane Traffic (%)						
Lane Group Flow (vph)	15	890	1775	0	58	0
Enter Blocked Intersection	No	No	No	No	No	No
Lane Alignment	Left	Left	Left	Right	Left	Right
Median Width(ft)		12	12		12	
Link Offset(ft)		0	0		0	
Crosswalk Width(ft)		16	16		16	
Two way Left Turn Lane						
Headway Factor	1.00	1.00	1.00	1.00	1.00	1.00
Turning Speed (mph)	15			9	15	9
Sign Control		Free	Free		Stop	

Intersection Summary	
Area Type:	Other
Control Type: Unsignalized	
Intersection Capacity Utilization 58.3%	ICU Level of Service B
Analysis Period (min) 15	

Lane Group	EBT	EBR	WBL	WBT	NBL	NBR
Lane Configurations						
Traffic Volume (vph)	232	88	256	470	274	175
Future Volume (vph)	232	88	256	470	274	175
Ideal Flow (vphpl)	1900	1900	1900	1900	1900	1900
Lane Util. Factor	1.00	1.00	1.00	1.00	0.97	1.00
Ped Bike Factor	1.00		1.00			
Frt	0.963					0.850
Flt Protected			0.950		0.950	
Satd. Flow (prot)	1787	0	1787	1881	3400	1568
Flt Permitted			0.444		0.950	
Satd. Flow (perm)	1787	0	835	1881	3400	1568
Right Turn on Red		Yes				Yes
Satd. Flow (RTOR)	30					192
Link Speed (mph)	30			30	30	
Link Distance (ft)	155			1747	395	
Travel Time (s)	3.5			39.7	9.0	
Confl. Peds. (#/hr)		3	3			3
Peak Hour Factor	0.91	0.91	0.91	0.91	0.91	0.91
Heavy Vehicles (%)	2%	2%	1%	1%	3%	3%
Adj. Flow (vph)	255	97	281	516	301	192
Shared Lane Traffic (%)						
Lane Group Flow (vph)	352	0	281	516	301	192
Enter Blocked Intersection	No	No	No	No	No	No
Lane Alignment	Left	Right	Left	Left	Left	Right
Median Width(ft)	12			12	24	
Link Offset(ft)	0			0	0	
Crosswalk Width(ft)	16			16	16	
Two way Left Turn Lane						
Headway Factor	1.00	1.00	1.00	1.00	1.00	1.00
Turning Speed (mph)		9	15		15	9
Number of Detectors	2		1	2	1	1
Detector Template	Thru		Left	Thru	Left	Right
Leading Detector (ft)	100		20	100	20	20
Trailing Detector (ft)	0		0	0	0	0
Detector 1 Position(ft)	0		0	0	0	0
Detector 1 Size(ft)	6		20	6	20	20
Detector 1 Type	Cl+Ex		Cl+Ex	Cl+Ex	Cl+Ex	Cl+Ex
Detector 1 Channel						
Detector 1 Extend (s)	0.0		0.0	0.0	0.0	0.0
Detector 1 Queue (s)	0.0		0.0	0.0	0.0	0.0
Detector 1 Delay (s)	0.0		0.0	0.0	0.0	0.0
Detector 2 Position(ft)	94			94		
Detector 2 Size(ft)	6			6		
Detector 2 Type	Cl+Ex			Cl+Ex		
Detector 2 Channel						
Detector 2 Extend (s)	0.0			0.0		
Turn Type	NA		pm+pt	NA	Perm	Over
Protected Phases	6		5	2		5
Permitted Phases			2		4	

Lane Group	EBT	EBR	WBL	WBT	NBL	NBR
Detector Phase	6		5	2	4	5
Switch Phase						
Minimum Initial (s)	15.0		5.0	15.0	7.0	5.0
Minimum Split (s)	22.5		12.2	22.5	17.0	12.2
Total Split (s)	48.0		14.0	62.0	24.0	14.0
Total Split (%)	55.8%		16.3%	72.1%	27.9%	16.3%
Maximum Green (s)	40.5		6.8	54.5	18.0	6.8
Yellow Time (s)	4.0		3.7	4.0	4.0	3.7
All-Red Time (s)	3.5		3.5	3.5	2.0	3.5
Lost Time Adjust (s)	0.0		0.0	0.0	0.0	0.0
Total Lost Time (s)	7.5		7.2	7.5	6.0	7.2
Lead/Lag	Lag		Lead			Lead
Lead-Lag Optimize?	Yes		Yes			Yes
Vehicle Extension (s)	1.0		2.0	1.0	2.5	2.0
Recall Mode	Max		None	Max	None	None
Walk Time (s)					2.0	
Flash Dont Walk (s)					9.0	
Pedestrian Calls (#/hr)					0	
Act Effct Green (s)	40.6		54.9	54.6	11.8	6.7
Actuated g/C Ratio	0.51		0.69	0.68	0.15	0.08
v/c Ratio	0.38		0.43	0.40	0.60	0.63
Control Delay	12.8		7.3	7.0	36.9	15.9
Queue Delay	0.0		0.0	0.0	0.0	0.0
Total Delay	12.8		7.3	7.0	36.9	15.9
LOS	B		A	A	D	B
Approach Delay	12.8			7.1	28.7	
Approach LOS	B			A	C	

Intersection Summary	
Area Type:	Other
Cycle Length: 86	
Actuated Cycle Length: 79.9	
Natural Cycle: 60	
Control Type: Actuated-Uncoordinated	
Maximum v/c Ratio: 0.63	
Intersection Signal Delay: 14.8	Intersection LOS: B
Intersection Capacity Utilization 57.0%	ICU Level of Service B
Analysis Period (min) 15	

Splits and Phases: 16: SW 70th Ave & SW 80th St

Lane Group	EBL	EBT	WBT	WBR	SBL	SBR
Lane Configurations						
Traffic Volume (vph)	13	214	561	8	6	41
Future Volume (vph)	13	214	561	8	6	41
Ideal Flow (vphpl)	1900	1900	1900	1900	1900	1900
Lane Util. Factor	1.00	1.00	1.00	1.00	1.00	1.00
Frt			0.998		0.882	
Flt Protected		0.997			0.994	
Satd. Flow (prot)	0	1857	1877	0	1649	0
Flt Permitted		0.997			0.994	
Satd. Flow (perm)	0	1857	1877	0	1649	0
Link Speed (mph)		30	30		30	
Link Distance (ft)		235	1246		617	
Travel Time (s)		5.3	28.3		14.0	
Peak Hour Factor	0.96	0.96	0.96	0.96	0.96	0.96
Heavy Vehicles (%)	2%	2%	1%	1%	1%	1%
Adj. Flow (vph)	14	223	584	8	6	43
Shared Lane Traffic (%)						
Lane Group Flow (vph)	0	237	592	0	49	0
Enter Blocked Intersection	No	No	No	No	No	No
Lane Alignment	Left	Left	Left	Right	Left	Right
Median Width(ft)		0	0		12	
Link Offset(ft)		0	0		0	
Crosswalk Width(ft)		16	16		16	
Two way Left Turn Lane						
Headway Factor	1.00	1.00	1.00	1.00	1.00	1.00
Turning Speed (mph)	15			9	15	9
Sign Control		Free	Free		Stop	

Intersection Summary			
Area Type:	Other		
Control Type: Unsignalized			
Intersection Capacity Utilization 40.0%		ICU Level of Service A	
Analysis Period (min) 15			

Lane Group	EBL	EBT	WBT	WBR	SBL	SBR
Lane Configurations						
Traffic Volume (vph)	9	888	1657	5	6	11
Future Volume (vph)	9	888	1657	5	6	11
Ideal Flow (vphpl)	1900	1900	1900	1900	1900	1900
Storage Length (ft)	60			0	0	0
Storage Lanes	1			0	1	0
Taper Length (ft)	25				25	
Lane Util. Factor	1.00	0.95	0.95	0.95	1.00	1.00
Ped Bike Factor						
Frt					0.910	
Flt Protected	0.950				0.984	
Satd. Flow (prot)	1787	3574	3574	0	1652	0
Flt Permitted	0.950				0.984	
Satd. Flow (perm)	1787	3574	3574	0	1652	0
Link Speed (mph)		30	30		30	
Link Distance (ft)		1866	224		577	
Travel Time (s)		42.4	5.1		13.1	
Confl. Peds. (#/hr)	1			1	1	
Peak Hour Factor	0.95	0.95	0.95	0.95	0.95	0.95
Heavy Vehicles (%)	1%	1%	1%	1%	3%	3%
Adj. Flow (vph)	9	935	1744	5	6	12
Shared Lane Traffic (%)						
Lane Group Flow (vph)	9	935	1749	0	18	0
Enter Blocked Intersection	No	No	No	No	No	No
Lane Alignment	Left	Left	Left	Right	Left	Right
Median Width(ft)		12	12		12	
Link Offset(ft)		0	0		0	
Crosswalk Width(ft)		16	16		16	
Two way Left Turn Lane						
Headway Factor	1.00	1.00	1.00	1.00	1.00	1.00
Turning Speed (mph)	15			9	15	9
Sign Control		Free	Free		Stop	

Intersection Summary	
Area Type:	Other
Control Type: Unsignalized	
Intersection Capacity Utilization 56.0%	ICU Level of Service B
Analysis Period (min) 15	

Lane Group	EBL	EBT	EBR	WBL	WBT	WBR	NBL	NBT	NBR	SBL	SBT	SBR
Lane Configurations												
Traffic Volume (vph)	7	27	0	0	109	32	0	0	0	28	0	39
Future Volume (vph)	7	27	0	0	109	32	0	0	0	28	0	39
Ideal Flow (vphpl)	1900	1900	1900	1900	1900	1900	1900	1900	1900	1900	1900	1900
Lane Util. Factor	1.00	1.00	1.00	1.00	1.00	1.00	1.00	1.00	1.00	1.00	1.00	1.00
Ped Bike Factor												
Frt					0.970						0.922	
Flt Protected		0.990									0.979	
Satd. Flow (prot)	0	1862	0	0	1825	0	0	1881	0	0	1698	0
Flt Permitted		0.990									0.979	
Satd. Flow (perm)	0	1862	0	0	1825	0	0	1881	0	0	1698	0
Link Speed (mph)		30			30			30			30	
Link Distance (ft)		265			1151			219			613	
Travel Time (s)		6.0			26.2			5.0			13.9	
Confl. Peds. (#/hr)			5	5					11	11		
Peak Hour Factor	0.88	0.88	0.88	0.88	0.88	0.88	0.88	0.88	0.88	0.88	0.88	0.88
Heavy Vehicles (%)	1%	1%	1%	1%	1%	1%	1%	1%	1%	1%	1%	1%
Adj. Flow (vph)	8	31	0	0	124	36	0	0	0	32	0	44
Shared Lane Traffic (%)												
Lane Group Flow (vph)	0	39	0	0	160	0	0	0	0	0	76	0
Enter Blocked Intersection	No	No	No	No	No	No	No	No	No	No	No	No
Lane Alignment	Left	Left	Right	Left	Left	Right	Left	Left	Right	Left	Left	Right
Median Width(ft)		0			0			0			0	
Link Offset(ft)		0			0			0			0	
Crosswalk Width(ft)		16			16			16			16	
Two way Left Turn Lane												
Headway Factor	1.00	1.00	1.00	1.00	1.00	1.00	1.00	1.00	1.00	1.00	1.00	1.00
Turning Speed (mph)	15		9	15		9	15		9	15		9
Sign Control		Stop			Stop			Stop			Stop	

Intersection Summary			
Area Type:	Other		
Control Type: Unsignalized			
Intersection Capacity Utilization 21.4%		ICU Level of Service A	
Analysis Period (min) 15			

Synchro Inputs – Future Condition – AM

Lane Group	EBL	EBT	EBR	WBL	WBT	WBR	NBL	NBT	NBR	SBL	SBT	SBR
Lane Configurations												
Traffic Volume (vph)	14	1994	79	23	1558	4	119	104	19	6	41	178
Future Volume (vph)	14	1994	79	23	1558	4	119	104	19	6	41	178
Ideal Flow (vphpl)	1900	1900	1900	1900	1900	1900	1900	1900	1900	1900	1900	1900
Storage Length (ft)	0		0	110		0	120		0	80		0
Storage Lanes	0		0	1		0	1		0	1		1
Taper Length (ft)	25			25			25			25		
Lane Util. Factor	0.95	0.95	0.95	1.00	0.95	0.95	1.00	1.00	1.00	1.00	1.00	1.00
Ped Bike Factor					1.00		1.00					0.98
Frt		0.994						0.977				0.850
Flt Protected				0.950			0.950			0.950		
Satd. Flow (prot)	0	3518	0	1752	3505	0	1719	1768	0	1770	1863	1583
Flt Permitted		0.924		0.033			0.729			0.593		
Satd. Flow (perm)	0	3251	0	61	3505	0	1313	1768	0	1105	1863	1557
Right Turn on Red			Yes			Yes			Yes			Yes
Satd. Flow (RTOR)		4						5				57
Link Speed (mph)		30			30			30			30	
Link Distance (ft)		171			3106			1344			634	
Travel Time (s)		3.9			70.6			30.5			14.4	
Confl. Peds. (#/hr)	1					1	2					2
Peak Hour Factor	0.95	0.95	0.95	0.95	0.95	0.95	0.95	0.95	0.95	0.95	0.95	0.95
Heavy Vehicles (%)	2%	2%	2%	3%	3%	3%	5%	5%	5%	2%	2%	2%
Adj. Flow (vph)	15	2099	83	24	1640	4	125	109	20	6	43	187
Shared Lane Traffic (%)												
Lane Group Flow (vph)	0	2197	0	24	1644	0	125	129	0	6	43	187
Enter Blocked Intersection	No	No	No	No	No	No	No	No	No	No	No	No
Lane Alignment	Left	Left	Right	Left	Left	Right	Left	Left	Right	Left	Left	Right
Median Width(ft)		12			12			12			12	
Link Offset(ft)		0			0			0			0	
Crosswalk Width(ft)		16			16			16			16	
Two way Left Turn Lane												
Headway Factor	1.00	1.00	1.00	1.00	1.00	1.00	1.00	1.00	1.00	1.00	1.00	1.00
Turning Speed (mph)	15		9	15		9	15		9	15		9
Number of Detectors	1	2		1	2		1	2		1	2	1
Detector Template	Left	Thru		Left	Thru		Left	Thru		Left	Thru	Right
Leading Detector (ft)	20	100		20	100		20	100		20	100	20
Trailing Detector (ft)	0	0		0	0		0	0		0	0	0
Detector 1 Position(ft)	0	0		0	0		0	0		0	0	0
Detector 1 Size(ft)	20	6		20	6		20	6		20	6	20
Detector 1 Type	Cl+Ex	Cl+Ex		Cl+Ex	Cl+Ex		Cl+Ex	Cl+Ex		Cl+Ex	Cl+Ex	Cl+Ex
Detector 1 Channel												
Detector 1 Extend (s)	0.0	0.0		0.0	0.0		0.0	0.0		0.0	0.0	0.0
Detector 1 Queue (s)	0.0	0.0		0.0	0.0		0.0	0.0		0.0	0.0	0.0
Detector 1 Delay (s)	0.0	0.0		0.0	0.0		0.0	0.0		0.0	0.0	0.0
Detector 2 Position(ft)		94			94			94			94	
Detector 2 Size(ft)		6			6			6			6	
Detector 2 Type		Cl+Ex			Cl+Ex			Cl+Ex			Cl+Ex	
Detector 2 Channel												
Detector 2 Extend (s)		0.0			0.0			0.0			0.0	

Lane Group	EBL	EBT	EBR	WBL	WBT	WBR	NBL	NBT	NBR	SBL	SBT	SBR
Turn Type	Perm	NA		pm+pt	NA		Perm	NA		Perm	NA	Perm
Protected Phases		6		5	2			4			8	
Permitted Phases	6			2			4			8		8
Detector Phase	6	6		5	2		4	4		8	8	8
Switch Phase												
Minimum Initial (s)	7.0	7.0		5.0	7.0		7.0	7.0		7.0	7.0	7.0
Minimum Split (s)	29.4	29.4		11.0	29.4		28.0	28.0		28.0	28.0	28.0
Total Split (s)	122.0	122.0		12.0	134.0		46.0	46.0		46.0	46.0	46.0
Total Split (%)	67.8%	67.8%		6.7%	74.4%		25.6%	25.6%		25.6%	25.6%	25.6%
Maximum Green (s)	115.6	115.6		6.0	127.6		40.0	40.0		40.0	40.0	40.0
Yellow Time (s)	4.4	4.4		4.0	4.4		4.0	4.0		4.0	4.0	4.0
All-Red Time (s)	2.0	2.0		2.0	2.0		2.0	2.0		2.0	2.0	2.0
Lost Time Adjust (s)		0.0		0.0	0.0		0.0	0.0		0.0	0.0	0.0
Total Lost Time (s)		6.4		6.0	6.4		6.0	6.0		6.0	6.0	6.0
Lead/Lag	Lag	Lag		Lead								
Lead-Lag Optimize?	Yes	Yes		Yes								
Vehicle Extension (s)	1.0	1.0		2.0	1.0		2.5	2.5		2.5	2.5	2.5
Recall Mode	None	None		Max	C-Min		Max	Max		Max	Max	Max
Walk Time (s)	7.0	7.0			7.0		7.0	7.0		7.0	7.0	7.0
Flash Dont Walk (s)	16.0	16.0			16.0		15.0	15.0		15.0	15.0	15.0
Pedestrian Calls (#/hr)	0	0			0		0	0		0	0	0
Act Effct Green (s)		115.6		128.0	127.6		40.0	40.0		40.0	40.0	40.0
Actuated g/C Ratio		0.64		0.71	0.71		0.22	0.22		0.22	0.22	0.22
v/c Ratio		1.05		0.24	0.66		0.43	0.33		0.02	0.10	0.48
Control Delay		66.5		13.4	16.0		65.6	59.0		55.3	56.7	46.3
Queue Delay		0.0		0.0	0.0		0.0	0.0		0.0	0.0	0.0
Total Delay		66.5		13.4	16.0		65.6	59.0		55.3	56.7	46.3
LOS		E		B	B		E	E		E	E	D
Approach Delay		66.5			15.9			62.3			48.4	
Approach LOS		E			B			E			D	

Intersection Summary

Area Type: Other
Cycle Length: 180
Actuated Cycle Length: 180
Offset: 58 (32%), Referenced to phase 2:WBTL, Start of Yellow
Natural Cycle: 140
Control Type: Actuated-Coordinated
Maximum v/c Ratio: 1.05
Intersection Signal Delay: 45.9 — Intersection LOS: D
Intersection Capacity Utilization 96.1% — ICU Level of Service F
Analysis Period (min) 15

Splits and Phases: 1: SW 69th Ave/NW 69th Ave & W Flagler St

Lane Group	EBL	EBT	WBT	WBR	SBL	SBR
Lane Configurations						
Traffic Volume (vph)	11	2122	1811	9	1	3
Future Volume (vph)	11	2122	1811	9	1	3
Ideal Flow (vphpl)	1900	1900	1900	1900	1900	1900
Storage Length (ft)	125			0	0	0
Storage Lanes	1			0	1	0
Taper Length (ft)	25				25	
Lane Util. Factor	1.00	0.95	0.95	0.95	1.00	1.00
Ped Bike Factor						
Frt			0.999		0.899	
Flt Protected	0.950				0.988	
Satd. Flow (prot)	1787	3574	3571	0	1671	0
Flt Permitted	0.950				0.988	
Satd. Flow (perm)	1787	3574	3571	0	1671	0
Link Speed (mph)		30	30		30	
Link Distance (ft)		2193	130		251	
Travel Time (s)		49.8	3.0		5.7	
Confl. Peds. (#/hr)	10					
Peak Hour Factor	0.97	0.97	0.97	0.97	0.97	0.97
Heavy Vehicles (%)	1%	1%	1%	1%	1%	1%
Adj. Flow (vph)	11	2188	1867	9	1	3
Shared Lane Traffic (%)						
Lane Group Flow (vph)	11	2188	1876	0	4	0
Enter Blocked Intersection	No	No	No	No	No	No
Lane Alignment	Left	Left	Left	Right	Left	Right
Median Width(ft)		12	12		12	
Link Offset(ft)		0	0		0	
Crosswalk Width(ft)		16	16		16	
Two way Left Turn Lane						
Headway Factor	1.00	1.00	1.00	1.00	1.00	1.00
Turning Speed (mph)	15			9	15	9
Sign Control		Free	Free		Stop	

Intersection Summary	
Area Type:	Other
Control Type: Unsignalized	
Intersection Capacity Utilization 68.7%	ICU Level of Service C
Analysis Period (min) 15	

Lane Group	EBL	EBT	EBR	WBL	WBT	WBR	NBL	NBT	NBR	SBL	SBT	SBR
Lane Configurations												
Traffic Volume (vph)	50	469	71	6	234	11	44	119	13	20	66	41
Future Volume (vph)	50	469	71	6	234	11	44	119	13	20	66	41
Ideal Flow (vphpl)	1900	1900	1900	1900	1900	1900	1900	1900	1900	1900	1900	1900
Lane Util. Factor	1.00	1.00	1.00	1.00	1.00	1.00	1.00	1.00	1.00	1.00	1.00	1.00
Ped Bike Factor												
Frt		0.984			0.994			0.990			0.957	
Flt Protected		0.996			0.999			0.988			0.992	
Satd. Flow (prot)	0	1791	0	0	1850	0	0	1804	0	0	1702	0
Flt Permitted		0.996			0.999			0.988			0.992	
Satd. Flow (perm)	0	1791	0	0	1850	0	0	1804	0	0	1702	0
Link Speed (mph)		30			30			30			30	
Link Distance (ft)		175			3048			1367			1344	
Travel Time (s)		4.0			69.3			31.1			30.5	
Confl. Peds. (#/hr)	1					1	2					2
Peak Hour Factor	0.93	0.93	0.93	0.93	0.93	0.93	0.93	0.93	0.93	0.93	0.93	0.93
Heavy Vehicles (%)	4%	4%	4%	2%	2%	2%	3%	3%	3%	6%	6%	6%
Adj. Flow (vph)	54	504	76	6	252	12	47	128	14	22	71	44
Shared Lane Traffic (%)												
Lane Group Flow (vph)	0	634	0	0	270	0	0	189	0	0	137	0
Enter Blocked Intersection	No	No	No	No	No	No	No	No	No	No	No	No
Lane Alignment	Left	Left	Right	Left	Left	Right	Left	Left	Right	Left	Left	Right
Median Width(ft)		0			0			12			12	
Link Offset(ft)		0			0			0			0	
Crosswalk Width(ft)		16			16			16			16	
Two way Left Turn Lane												
Headway Factor	1.00	1.00	1.00	1.00	1.00	1.00	1.00	1.00	1.00	1.00	1.00	1.00
Turning Speed (mph)	15		9	15		9	15		9	15		9
Sign Control		Stop			Stop			Stop			Stop	

Intersection Summary	
Area Type:	Other
Control Type: Unsignalized	
Intersection Capacity Utilization 70.3%	ICU Level of Service C
Analysis Period (min) 15	

Lane Group	EBL	EBT	EBR	WBL	WBT	WBR	NBL	NBT	NBR	SBL	SBT	SBR
Lane Configurations												
Traffic Volume (vph)	39	2166	32	37	1656	52	81	8	65	65	6	25
Future Volume (vph)	39	2166	32	37	1656	52	81	8	65	65	6	25
Ideal Flow (vphpl)	1900	1900	1900	1900	1900	1900	1900	1900	1900	1900	1900	1900
Storage Length (ft)	100		0	45		0	0		0	0		0
Storage Lanes	1		0	1		0	0		0	0		1
Taper Length (ft)	25			25			25			25		
Lane Util. Factor	1.00	0.95	0.95	1.00	0.95	0.95	1.00	1.00	1.00	1.00	1.00	1.00
Ped Bike Factor		1.00			1.00			0.99				
Frt		0.998			0.995			0.943				0.850
Flt Protected	0.950			0.950				0.974			0.956	
Satd. Flow (prot)	1787	3566	0	1770	3516	0	0	1684	0	0	1763	1568
Flt Permitted	0.073			0.031				0.796			0.564	
Satd. Flow (perm)	137	3566	0	58	3516	0	0	1376	0	0	1040	1568
Right Turn on Red			Yes			Yes			Yes			Yes
Satd. Flow (RTOR)		2			4			15				26
Link Speed (mph)		30			30			30			30	
Link Distance (ft)		3163			226			1301			124	
Travel Time (s)		71.9			5.1			29.6			2.8	
Confl. Peds. (#/hr)	7		2	2		7			1	1		
Peak Hour Factor	0.98	0.98	0.98	0.98	0.98	0.98	0.98	0.98	0.98	0.98	0.98	0.98
Heavy Vehicles (%)	1%	1%	1%	2%	2%	2%	3%	3%	3%	3%	3%	3%
Adj. Flow (vph)	40	2210	33	38	1690	53	83	8	66	66	6	26
Shared Lane Traffic (%)												
Lane Group Flow (vph)	40	2243	0	38	1743	0	0	157	0	0	72	26
Enter Blocked Intersection	No	No	No	No	No	No	No	No	No	No	No	No
Lane Alignment	Left	Left	Right	Left	Left	Right	Left	Left	Right	Left	Left	Right
Median Width(ft)		12			12			0			0	
Link Offset(ft)		0			0			0			0	
Crosswalk Width(ft)		16			16			16			16	
Two way Left Turn Lane												
Headway Factor	1.00	1.00	1.00	1.00	1.00	1.00	1.00	1.00	1.00	1.00	1.00	1.00
Turning Speed (mph)	15		9	15		9	15		9	15		9
Number of Detectors	1	2		1	2		1	2		1	2	1
Detector Template	Left	Thru		Left	Thru		Left	Thru		Left	Thru	Right
Leading Detector (ft)	20	100		20	100		20	100		20	100	20
Trailing Detector (ft)	0	0		0	0		0	0		0	0	0
Detector 1 Position(ft)	0	0		0	0		0	0		0	0	0
Detector 1 Size(ft)	20	6		20	6		20	6		20	6	20
Detector 1 Type	Cl+Ex	Cl+Ex		Cl+Ex	Cl+Ex		Cl+Ex	Cl+Ex		Cl+Ex	Cl+Ex	Cl+Ex
Detector 1 Channel												
Detector 1 Extend (s)	0.0	0.0		0.0	0.0		0.0	0.0		0.0	0.0	0.0
Detector 1 Queue (s)	0.0	0.0		0.0	0.0		0.0	0.0		0.0	0.0	0.0
Detector 1 Delay (s)	0.0	0.0		0.0	0.0		0.0	0.0		0.0	0.0	0.0
Detector 2 Position(ft)		94			94			94			94	
Detector 2 Size(ft)		6			6			6			6	
Detector 2 Type		Cl+Ex			Cl+Ex			Cl+Ex			Cl+Ex	
Detector 2 Channel												
Detector 2 Extend (s)		0.0			0.0			0.0			0.0	

Lane Group	EBL	EBT	EBR	WBL	WBT	WBR	NBL	NBT	NBR	SBL	SBT	SBR
Turn Type	pm+pt	NA		pm+pt	NA		Perm	NA		pm+pt	NA	pm+ov
Protected Phases	1	6		5	2			4		3	8	1
Permitted Phases	6			2			4			8		8
Detector Phase	1	6		5	2		4	4		3	8	1
Switch Phase												
Minimum Initial (s)	5.0	7.0		5.0	7.0		7.0	7.0		5.0	7.0	5.0
Minimum Split (s)	11.0	29.0		11.0	29.0		24.0	24.0		11.0	13.0	11.0
Total Split (s)	17.0	138.0		14.0	135.0		26.0	26.0		12.0	38.0	17.0
Total Split (%)	8.9%	72.6%		7.4%	71.1%		13.7%	13.7%		6.3%	20.0%	8.9%
Maximum Green (s)	11.0	132.0		8.0	129.0		20.0	20.0		6.0	32.0	11.0
Yellow Time (s)	4.0	4.0		4.0	4.0		4.0	4.0		4.0	4.0	4.0
All-Red Time (s)	2.0	2.0		2.0	2.0		2.0	2.0		2.0	2.0	2.0
Lost Time Adjust (s)	0.0	0.0		0.0	0.0			0.0			0.0	0.0
Total Lost Time (s)	6.0	6.0		6.0	6.0			6.0			6.0	6.0
Lead/Lag	Lead	Lag		Lead	Lag		Lag	Lag		Lead		Lead
Lead-Lag Optimize?	Yes	Yes		Yes	Yes		Yes	Yes		Yes		Yes
Vehicle Extension (s)	3.0	1.0		3.0	1.0		2.5	2.5		3.0	2.5	3.0
Recall Mode	Max	C-Min		Max	C-Min		Max	Max		Max	Max	Max
Walk Time (s)		5.0			5.0		5.0	5.0				
Flash Dont Walk (s)		18.0			18.0		13.0	13.0				
Pedestrian Calls (#/hr)		0			0		0	0				
Act Effct Green (s)	143.0	132.0		137.0	129.0			20.0			32.0	49.0
Actuated g/C Ratio	0.75	0.69		0.72	0.68			0.11			0.17	0.26
v/c Ratio	0.20	0.91		0.34	0.73			0.99			0.37	0.06
Control Delay	7.6	30.5		22.6	21.7			143.0			74.6	16.4
Queue Delay	0.0	0.0		0.0	0.0			0.0			0.0	0.0
Total Delay	7.6	30.5		22.6	21.7			143.0			74.6	16.4
LOS	A	C		C	C			F			E	B
Approach Delay		30.1			21.7			143.0			59.2	
Approach LOS		C			C			F			E	

Intersection Summary

Area Type: Other
Cycle Length: 190
Actuated Cycle Length: 190
Offset: 41 (22%), Referenced to phase 2:WBTL and 6:EBTL, Start of Yellow
Natural Cycle: 130
Control Type: Actuated-Coordinated
Maximum v/c Ratio: 0.99
Intersection Signal Delay: 31.4 Intersection LOS: C
Intersection Capacity Utilization 86.5% ICU Level of Service E
Analysis Period (min) 15

Splits and Phases: 4: SW 70th Ave & SW 8th St

Lane Group	EBL	EBT	EBR	WBL	WBT	WBR	NBL	NBT	NBR	SBL	SBT	SBR
Lane Configurations												
Traffic Volume (vph)	95	1990	15	11	1669	25	13	6	20	15	0	102
Future Volume (vph)	95	1990	15	11	1669	25	13	6	20	15	0	102
Ideal Flow (vphpl)	1900	1900	1900	1900	1900	1900	1900	1900	1900	1900	1900	1900
Storage Length (ft)	0		0	50		0	0		0	150		0
Storage Lanes	1		0	1		0	0		0	1		0
Taper Length (ft)	25			25			25			25		
Lane Util. Factor	1.00	0.95	0.95	1.00	0.95	0.95	1.00	1.00	1.00	1.00	1.00	1.00
Ped Bike Factor												
Frt		0.999			0.998			0.931			0.850	
Flt Protected	0.950			0.950				0.984		0.950		
Satd. Flow (prot)	1770	3536	0	1770	3532	0	0	1674	0	1736	1553	0
Flt Permitted	0.950			0.950				0.984		0.950		
Satd. Flow (perm)	1770	3536	0	1770	3532	0	0	1674	0	1736	1553	0
Link Speed (mph)		30			30			30			30	
Link Distance (ft)		172			4245			1304			1367	
Travel Time (s)		3.9			96.5			29.6			31.1	
Confl. Peds. (#/hr)	2		2	2		2	2		1	1		2
Peak Hour Factor	0.98	0.98	0.98	0.98	0.98	0.98	0.98	0.98	0.98	0.98	0.98	0.98
Heavy Vehicles (%)	2%	2%	2%	2%	2%	2%	4%	4%	4%	4%	4%	4%
Adj. Flow (vph)	97	2031	15	11	1703	26	13	6	20	15	0	104
Shared Lane Traffic (%)												
Lane Group Flow (vph)	97	2046	0	11	1729	0	0	39	0	15	104	0
Enter Blocked Intersection	No	No	No	No	No	No	No	No	No	No	No	No
Lane Alignment	Left	Left	Right	Left	Left	Right	Left	Left	Right	Left	Left	Right
Median Width(ft)		12			12			12			12	
Link Offset(ft)		0			0			0			0	
Crosswalk Width(ft)		16			16			16			16	
Two way Left Turn Lane												
Headway Factor	1.00	1.00	1.00	1.00	1.00	1.00	1.00	1.00	1.00	1.00	1.00	1.00
Turning Speed (mph)	15		9	15		9	15		9	15		9
Sign Control		Free			Free			Stop			Stop	

Intersection Summary	
Area Type:	Other
Control Type: Unsignalized	
Intersection Capacity Utilization 77.9%	ICU Level of Service D
Analysis Period (min) 15	

Lane Group	EBL	EBT	EBR	WBL	WBT	WBR	NBL	NBT	NBR	SBL	SBT	SBR
Lane Configurations												
Traffic Volume (vph)	23	150	19	6	137	10	31	23	11	8	10	22
Future Volume (vph)	23	150	19	6	137	10	31	23	11	8	10	22
Ideal Flow (vphpl)	1900	1900	1900	1900	1900	1900	1900	1900	1900	1900	1900	1900
Lane Util. Factor	1.00	1.00	1.00	1.00	1.00	1.00	1.00	1.00	1.00	1.00	1.00	1.00
Ped Bike Factor												
Frt		0.986			0.991			0.977			0.927	
Flt Protected		0.994			0.998			0.977			0.990	
Satd. Flow (prot)	0	1808	0	0	1842	0	0	1778	0	0	1630	0
Flt Permitted		0.994			0.998			0.977			0.990	
Satd. Flow (perm)	0	1808	0	0	1842	0	0	1778	0	0	1630	0
Link Speed (mph)		30			30			30			30	
Link Distance (ft)		1218			191			1295			1301	
Travel Time (s)		27.7			4.3			29.4			29.6	
Confl. Peds. (#/hr)	1		3	3		1			1	1		
Peak Hour Factor	0.84	0.84	0.84	0.84	0.84	0.84	0.84	0.84	0.84	0.84	0.84	0.84
Heavy Vehicles (%)	3%	3%	3%	2%	2%	2%	2%	2%	2%	7%	7%	7%
Adj. Flow (vph)	27	179	23	7	163	12	37	27	13	10	12	26
Shared Lane Traffic (%)												
Lane Group Flow (vph)	0	229	0	0	182	0	0	77	0	0	48	0
Enter Blocked Intersection	No	No	No	No	No	No	No	No	No	No	No	No
Lane Alignment	Left	Left	Right	Left	Left	Right	Left	Left	Right	Left	Left	Right
Median Width(ft)		0			0			0			0	
Link Offset(ft)		0			0			0			0	
Crosswalk Width(ft)		16			16			16			16	
Two way Left Turn Lane												
Headway Factor	1.00	1.00	1.00	1.00	1.00	1.00	1.00	1.00	1.00	1.00	1.00	1.00
Turning Speed (mph)	15		9	15		9	15		9	15		9
Sign Control		Stop			Stop			Stop			Stop	

Intersection Summary	
Area Type:	Other
Control Type: Unsignalized	
Intersection Capacity Utilization 33.0%	ICU Level of Service A
Analysis Period (min) 15	

Lane Group	EBL	EBT	EBR	WBL	WBT	WBR	NBL	NBT	NBR	SBL	SBT	SBR
Lane Configurations												
Traffic Volume (vph)	8	150	19	6	137	10	31	23	11	8	10	22
Future Volume (vph)	8	150	19	6	137	10	31	23	11	8	10	22
Ideal Flow (vphpl)	1900	1900	1900	1900	1900	1900	1900	1900	1900	1900	1900	1900
Lane Util. Factor	1.00	1.00	1.00	1.00	1.00	1.00	1.00	1.00	1.00	1.00	1.00	1.00
Ped Bike Factor												
Frt		0.986			0.991			0.977			0.925	
Flt Protected		0.998			0.998			0.977			0.991	
Satd. Flow (prot)	0	1851	0	0	1842	0	0	1761	0	0	1708	0
Flt Permitted		0.998			0.998			0.977			0.991	
Satd. Flow (perm)	0	1851	0	0	1842	0	0	1761	0	0	1708	0
Link Speed (mph)		30			30			30			30	
Link Distance (ft)		194			1122			681			1304	
Travel Time (s)		4.4			25.5			15.5			29.6	
Confl. Peds. (#/hr)	2		1	1		2	2		1	1		2
Peak Hour Factor	0.86	0.86	0.86	0.86	0.86	0.86	0.86	0.86	0.86	0.86	0.86	0.86
Heavy Vehicles (%)	1%	1%	1%	2%	2%	2%	3%	3%	3%	2%	2%	2%
Adj. Flow (vph)	9	174	22	7	159	12	36	27	13	9	12	26
Shared Lane Traffic (%)												
Lane Group Flow (vph)	0	205	0	0	178	0	0	76	0	0	47	0
Enter Blocked Intersection	No	No	No	No	No	No	No	No	No	No	No	No
Lane Alignment	Left	Left	Right	Left	Left	Right	Left	Left	Right	Left	Left	Right
Median Width(ft)		0			0			0			0	
Link Offset(ft)		0			0			0			0	
Crosswalk Width(ft)		16			16			16			16	
Two way Left Turn Lane												
Headway Factor	1.00	1.00	1.00	1.00	1.00	1.00	1.00	1.00	1.00	1.00	1.00	1.00
Turning Speed (mph)	15		9	15		9	15		9	15		9
Sign Control		Free			Free			Stop			Stop	

Intersection Summary	
Area Type:	Other
Control Type: Unsignalized	
Intersection Capacity Utilization 26.6%	ICU Level of Service A
Analysis Period (min) 15	

Lane Group	EBL	EBT	EBR	WBL	WBT	WBR	NBL	NBT	NBR	SBL	SBT	SBR
Lane Configurations												
Traffic Volume (vph)	14	412	10	69	281	28	14	72	168	25	37	8
Future Volume (vph)	14	412	10	69	281	28	14	72	168	25	37	8
Ideal Flow (vphpl)	1900	1900	1900	1900	1900	1900	1900	1900	1900	1900	1900	1900
Lane Util. Factor	1.00	1.00	1.00	1.00	1.00	1.00	1.00	1.00	1.00	1.00	1.00	1.00
Ped Bike Factor		1.00			1.00							
Frt		0.997			0.990			0.911			0.985	
Flt Protected		0.998			0.991			0.997			0.983	
Satd. Flow (prot)	0	1871	0	0	1846	0	0	1692	0	0	1804	0
Flt Permitted		0.984			0.860			0.976			0.674	
Satd. Flow (perm)	0	1845	0	0	1601	0	0	1656	0	0	1237	0
Right Turn on Red			Yes			Yes			Yes			Yes
Satd. Flow (RTOR)		3			9			149			8	
Link Speed (mph)		30			30			30			30	
Link Distance (ft)		3560			156			188			1295	
Travel Time (s)		80.9			3.5			4.3			29.4	
Confl. Peds. (#/hr)			2	2								
Peak Hour Factor	0.96	0.96	0.96	0.96	0.96	0.96	0.96	0.96	0.96	0.96	0.96	0.96
Heavy Vehicles (%)	1%	1%	1%	1%	1%	1%	2%	2%	2%	2%	2%	2%
Adj. Flow (vph)	15	429	10	72	293	29	15	75	175	26	39	8
Shared Lane Traffic (%)												
Lane Group Flow (vph)	0	454	0	0	394	0	0	265	0	0	73	0
Enter Blocked Intersection	No	No	No	No	No	No	No	No	No	No	No	No
Lane Alignment	Left	Left	Right	Left	Left	Right	Left	Left	Right	Left	Left	Right
Median Width(ft)		0			0			0			0	
Link Offset(ft)		0			0			0			0	
Crosswalk Width(ft)		16			16			16			16	
Two way Left Turn Lane												
Headway Factor	1.00	1.00	1.00	1.00	1.00	1.00	1.00	1.00	1.00	1.00	1.00	1.00
Turning Speed (mph)	15		9	15		9	15		9	15		9
Number of Detectors	1	2		1	2		1	2		1	2	
Detector Template	Left	Thru		Left	Thru		Left	Thru		Left	Thru	
Leading Detector (ft)	20	100		20	100		20	100		20	100	
Trailing Detector (ft)	0	0		0	0		0	0		0	0	
Detector 1 Position(ft)	0	0		0	0		0	0		0	0	
Detector 1 Size(ft)	20	6		20	6		20	6		20	6	
Detector 1 Type	Cl+Ex	Cl+Ex		Cl+Ex	Cl+Ex		Cl+Ex	Cl+Ex		Cl+Ex	Cl+Ex	
Detector 1 Channel												
Detector 1 Extend (s)	0.0	0.0		0.0	0.0		0.0	0.0		0.0	0.0	
Detector 1 Queue (s)	0.0	0.0		0.0	0.0		0.0	0.0		0.0	0.0	
Detector 1 Delay (s)	0.0	0.0		0.0	0.0		0.0	0.0		0.0	0.0	
Detector 2 Position(ft)		94			94			94			94	
Detector 2 Size(ft)		6			6			6			6	
Detector 2 Type		Cl+Ex			Cl+Ex			Cl+Ex			Cl+Ex	
Detector 2 Channel												
Detector 2 Extend (s)		0.0			0.0			0.0			0.0	
Turn Type	Perm	NA		Perm	NA		Perm	NA		Perm	NA	
Protected Phases		2			6			4			8	
Permitted Phases	2			6			4			8		

Lane Group	EBL	EBT	EBR	WBL	WBT	WBR	NBL	NBT	NBR	SBL	SBT	SBR
Detector Phase	2	2		6	6		4	4		8	8	
Switch Phase												
Minimum Initial (s)	12.0	12.0		12.0	12.0		7.0	7.0		7.0	7.0	
Minimum Split (s)	18.0	18.0		18.0	18.0		17.0	17.0		13.0	13.0	
Total Split (s)	41.0	41.0		41.0	41.0		26.0	26.0		26.0	26.0	
Total Split (%)	61.2%	61.2%		61.2%	61.2%		38.8%	38.8%		38.8%	38.8%	
Maximum Green (s)	35.0	35.0		35.0	35.0		20.0	20.0		20.0	20.0	
Yellow Time (s)	4.0	4.0		4.0	4.0		4.0	4.0		4.0	4.0	
All-Red Time (s)	2.0	2.0		2.0	2.0		2.0	2.0		2.0	2.0	
Lost Time Adjust (s)		0.0			0.0			0.0			0.0	
Total Lost Time (s)		6.0			6.0			6.0			6.0	
Lead/Lag												
Lead-Lag Optimize?												
Vehicle Extension (s)	1.0	1.0		1.0	1.0		2.5	2.5		2.5	2.5	
Recall Mode	Max	Max		None	None		None	None		None	None	
Walk Time (s)							1.0	1.0				
Flash Dont Walk (s)							10.0	10.0				
Pedestrian Calls (#/hr)							0	0				
Act Effct Green (s)		35.1			35.1			9.9			9.9	
Actuated g/C Ratio		0.62			0.62			0.17			0.17	
v/c Ratio		0.40			0.40			0.65			0.33	
Control Delay		7.5			7.6			17.8			22.6	
Queue Delay		0.0			0.0			0.0			0.0	
Total Delay		7.5			7.6			17.8			22.6	
LOS		A			A			B			C	
Approach Delay		7.5			7.6			17.8			22.6	
Approach LOS		A			A			B			C	

Intersection Summary	
Area Type:	Other
Cycle Length: 67	
Actuated Cycle Length: 57	
Natural Cycle: 40	
Control Type: Actuated-Uncoordinated	
Maximum v/c Ratio: 0.65	
Intersection Signal Delay: 10.8	Intersection LOS: B
Intersection Capacity Utilization 73.6%	ICU Level of Service D
Analysis Period (min) 15	

Splits and Phases: 8: SW 16th St & SW 70th Ave

Lane Group	EBL	EBT	EBR	WBL	WBT	WBR	NBL	NBT	NBR	SBL	SBT	SBR
Lane Configurations												
Traffic Volume (vph)	5	1953	3	17	1420	32	5	0	0	10	0	23
Future Volume (vph)	5	1953	3	17	1420	32	5	0	0	10	0	23
Ideal Flow (vphpl)	1900	1900	1900	1900	1900	1900	1900	1900	1900	1900	1900	1900
Storage Length (ft)	0		0	0		65	0		0	0		0
Storage Lanes	1		0	0		1	0		0	0		0
Taper Length (ft)	25			25			25			25		
Lane Util. Factor	1.00	0.95	0.95	0.91	0.91	1.00	1.00	1.00	1.00	1.00	1.00	1.00
Ped Bike Factor	0.99	1.00				0.91					0.99	
Frt						0.850					0.905	
Flt Protected	0.950				0.999			0.950			0.986	
Satd. Flow (prot)	1770	3539	0	0	5080	1583	0	1736	0	0	1662	0
Flt Permitted	0.950				0.820			0.761			0.899	
Satd. Flow (perm)	1755	3539	0	0	4170	1447	0	1390	0	0	1508	0
Right Turn on Red			Yes			Yes			Yes			Yes
Satd. Flow (RTOR)						93					169	
Link Speed (mph)		30			30			30			30	
Link Distance (ft)		190			193			454			534	
Travel Time (s)		4.3			4.4			10.3			12.1	
Confl. Peds. (#/hr)	12		1	1		12			2	2		
Peak Hour Factor	0.96	0.96	0.96	0.96	0.96	0.92	0.96	0.96	0.96	0.96	0.96	0.96
Heavy Vehicles (%)	2%	2%	2%	2%	2%	2%	4%	4%	4%	2%	2%	2%
Adj. Flow (vph)	5	2034	3	18	1479	35	5	0	0	10	0	24
Shared Lane Traffic (%)												
Lane Group Flow (vph)	5	2037	0	0	1497	35	0	5	0	0	34	0
Enter Blocked Intersection	No	No	No	No	No	No	No	No	No	No	No	No
Lane Alignment	Left	Left	Right	Left	Left	Right	Left	Left	Right	Left	Left	Right
Median Width(ft)		12			12			0			0	
Link Offset(ft)		0			0			0			0	
Crosswalk Width(ft)		16			16			16			16	
Two way Left Turn Lane												
Headway Factor	1.00	1.00	1.00	1.00	1.00	1.00	1.00	1.00	1.00	1.00	1.00	1.00
Turning Speed (mph)	15		9	15		9	15		9	15		9
Number of Detectors	1	2		1	2	1	1	2		1	2	
Detector Template	Left	Thru		Left	Thru	Right	Left	Thru		Left	Thru	
Leading Detector (ft)	20	100		20	100	20	20	100		20	100	
Trailing Detector (ft)	0	0		0	0	0	0	0		0	0	
Detector 1 Position(ft)	0	0		0	0	0	0	0		0	0	
Detector 1 Size(ft)	20	6		20	6	20	20	6		20	6	
Detector 1 Type	Cl+Ex	Cl+Ex		Cl+Ex	Cl+Ex	Cl+Ex	Cl+Ex	Cl+Ex		Cl+Ex	Cl+Ex	
Detector 1 Channel												
Detector 1 Extend (s)	0.0	0.0		0.0	0.0	0.0	0.0	0.0		0.0	0.0	
Detector 1 Queue (s)	0.0	0.0		0.0	0.0	0.0	0.0	0.0		0.0	0.0	
Detector 1 Delay (s)	0.0	0.0		0.0	0.0	0.0	0.0	0.0		0.0	0.0	
Detector 2 Position(ft)		94			94			94			94	
Detector 2 Size(ft)		6			6			6			6	
Detector 2 Type		Cl+Ex			Cl+Ex			Cl+Ex			Cl+Ex	
Detector 2 Channel												
Detector 2 Extend (s)		0.0			0.0			0.0			0.0	

Lane Group	Ø1	Ø2	Ø4	Ø5	Ø6	Ø8	Ø9	Ø13
Lane Configurations								
Traffic Volume (vph)								
Future Volume (vph)								
Ideal Flow (vphpl)								
Storage Length (ft)								
Storage Lanes								
Taper Length (ft)								
Lane Util. Factor								
Ped Bike Factor								
Frt								
Flt Protected								
Satd. Flow (prot)								
Flt Permitted								
Satd. Flow (perm)								
Right Turn on Red								
Satd. Flow (RTOR)								
Link Speed (mph)								
Link Distance (ft)								
Travel Time (s)								
Confl. Peds. (#/hr)								
Peak Hour Factor								
Heavy Vehicles (%)								
Adj. Flow (vph)								
Shared Lane Traffic (%)								
Lane Group Flow (vph)								
Enter Blocked Intersection								
Lane Alignment								
Median Width(ft)								
Link Offset(ft)								
Crosswalk Width(ft)								
Two way Left Turn Lane								
Headway Factor								
Turning Speed (mph)								
Number of Detectors								
Detector Template								
Leading Detector (ft)								
Trailing Detector (ft)								
Detector 1 Position(ft)								
Detector 1 Size(ft)								
Detector 1 Type								
Detector 1 Channel								
Detector 1 Extend (s)								
Detector 1 Queue (s)								
Detector 1 Delay (s)								
Detector 2 Position(ft)								
Detector 2 Size(ft)								
Detector 2 Type								
Detector 2 Channel								
Detector 2 Extend (s)								

Lane Group	EBL	EBT	EBR	WBL	WBT	WBR	NBL	NBT	NBR	SBL	SBT	SBR
Turn Type	Prot	NA		Prot	NA	Perm	Perm	NA		Perm	NA	
Protected Phases	1 13	6 13		5 8!	2 8!			3!			7	
Permitted Phases						2 8	3!			7		
Detector Phase	1 13	6 13		5 8	2 8	2 8	3	3		7	7	
Switch Phase												
Minimum Initial (s)							7.0	7.0		5.0	5.0	
Minimum Split (s)							13.0	13.0		10.7	10.7	
Total Split (s)							12.0	12.0		12.0	12.0	
Total Split (%)							6.7%	6.7%		6.7%	6.7%	
Maximum Green (s)							6.0	6.0		6.3	6.3	
Yellow Time (s)							4.0	4.0		3.7	3.7	
All-Red Time (s)							2.0	2.0		2.0	2.0	
Lost Time Adjust (s)								0.0			0.0	
Total Lost Time (s)								6.0			5.7	
Lead/Lag							Lead	Lead		Lead	Lead	
Lead-Lag Optimize?							Yes	Yes		Yes	Yes	
Vehicle Extension (s)							2.5	2.5		2.0	2.0	
Recall Mode							Max	Max		Max	Max	
Walk Time (s)												
Flash Dont Walk (s)												
Pedestrian Calls (#/hr)												
Act Effct Green (s)	32.2	107.6			123.4	123.4		33.0			6.3	
Actuated g/C Ratio	0.18	0.60			0.69	0.69		0.18			0.04	
v/c Ratio	0.02	0.96			0.64	0.03		0.02			0.16	
Control Delay	67.4	46.9			14.1	0.1		60.8			1.6	
Queue Delay	0.0	44.0			0.0	0.0		0.0			0.0	
Total Delay	67.4	90.9			14.1	0.1		60.8			1.6	
LOS	E	F			B	A		E			A	
Approach Delay		90.8			13.8			60.8			1.6	
Approach LOS		F			B			E			A	

Intersection Summary

Area Type: Other
Cycle Length: 180
Actuated Cycle Length: 180
Offset: 160 (89%), Referenced to phase 2:WBT and 6:EBT, Start of Yellow
Natural Cycle: 130
Control Type: Actuated-Coordinated
Maximum v/c Ratio: 0.96
Intersection Signal Delay: 57.3 Intersection LOS: E
Intersection Capacity Utilization 88.9% ICU Level of Service E
Analysis Period (min) 15
! Phase conflict between lane groups.

Splits and Phases: 9: Driveway/SW 70th Ct & SW 24th St

Lane Group	Ø1	Ø2	Ø4	Ø5	Ø6	Ø8	Ø9	Ø13
Turn Type								
Protected Phases	1	2	4	5	6	8	9	13
Permitted Phases								
Detector Phase								
Switch Phase								
Minimum Initial (s)	5.0	7.0	5.0	5.0	7.0	7.0	7.0	7.0
Minimum Split (s)	11.0	22.4	24.0	10.7	27.4	27.4	13.0	13.0
Total Split (s)	16.0	110.0	27.0	27.0	99.0	27.0	15.0	15.0
Total Split (%)	9%	61%	15%	15%	55%	15%	8%	8%
Maximum Green (s)	10.0	103.6	21.0	21.3	92.6	20.6	9.0	9.0
Yellow Time (s)	4.0	4.4	4.0	3.7	4.4	4.4	4.0	4.0
All-Red Time (s)	2.0	2.0	2.0	2.0	2.0	2.0	2.0	2.0
Lost Time Adjust (s)								
Total Lost Time (s)								
Lead/Lag	Lag	Lead	Lag	Lead	Lag	Lag		
Lead-Lag Optimize?	Yes	Yes	Yes	Yes	Yes	Yes		
Vehicle Extension (s)	3.0	1.0	3.0	3.0	1.0	1.0	1.0	1.0
Recall Mode	Max	C-Min	None	Max	C-Max	None	None	None
Walk Time (s)		7.0	7.0		7.0	7.0		
Flash Dont Walk (s)		9.0	11.0		14.0	14.0		
Pedestrian Calls (#/hr)		0	0		0	0		
Act Effct Green (s)								
Actuated g/C Ratio								
v/c Ratio								
Control Delay								
Queue Delay								
Total Delay								
LOS								
Approach Delay								
Approach LOS								

Intersection Summary

Lane Group	EBL	EBT	EBR	WBL	WBT	WBR	NBL	NBT	NBR	SBL	SBT	SBR
Lane Configurations												
Traffic Volume (vph)	44	1934	93	13	1314	79	38	17	32	11	8	64
Future Volume (vph)	44	1934	93	13	1314	79	38	17	32	11	8	64
Ideal Flow (vphpl)	1900	1900	1900	1900	1900	1900	1900	1900	1900	1900	1900	1900
Storage Length (ft)	0		80	0		100	0		0	0		0
Storage Lanes	0		1	0		1	0		0	0		0
Taper Length (ft)	25			25			25			25		
Lane Util. Factor	0.95	0.95	1.00	0.95	0.95	1.00	1.00	1.00	1.00	1.00	1.00	1.00
Ped Bike Factor												
Frt			0.850			0.850		0.950			0.895	
Flt Protected		0.999						0.979			0.994	
Satd. Flow (prot)	0	3536	1583	0	3539	1583	0	1750	0	0	1674	0
Flt Permitted		0.999						0.979			0.994	
Satd. Flow (perm)	0	3536	1583	0	3539	1583	0	1750	0	0	1674	0
Link Speed (mph)		30			30			30			30	
Link Distance (ft)		243			5738			2923			238	
Travel Time (s)		5.5			130.4			66.4			5.4	
Confl. Peds. (#/hr)	3					3	2		2	2		2
Peak Hour Factor	0.97	0.97	0.97	0.97	0.97	0.97	0.97	0.97	0.97	0.97	0.97	0.97
Heavy Vehicles (%)	2%	2%	2%	2%	2%	2%	1%	1%	1%	1%	1%	1%
Adj. Flow (vph)	45	1994	96	13	1355	81	39	18	33	11	8	66
Shared Lane Traffic (%)												
Lane Group Flow (vph)	0	2039	96	0	1368	81	0	90	0	0	85	0
Enter Blocked Intersection	No	No	No	No	No	No	No	No	No	No	No	No
Lane Alignment	Left	Left	Right	Left	Left	Right	Left	Left	Right	Left	Left	Right
Median Width(ft)		0			0			0			0	
Link Offset(ft)		0			0			0			0	
Crosswalk Width(ft)		16			16			16			16	
Two way Left Turn Lane												
Headway Factor	1.00	1.00	1.00	1.00	1.00	1.00	1.00	1.00	1.00	1.00	1.00	1.00
Turning Speed (mph)	15		9	15		9	15		9	15		9
Sign Control		Free			Free			Stop			Stop	

Intersection Summary	
Area Type:	Other
Control Type: Unsignalized	
Intersection Capacity Utilization 103.4%	ICU Level of Service G
Analysis Period (min) 15	

Lane Group	EBL	EBT	EBR	WBL	WBT	WBR	NBL	NBT	NBR	SBL	SBT	SBR
Lane Configurations												
Traffic Volume (vph)	10	3909	25	51	2168	10	0	0	0	3	0	6
Future Volume (vph)	10	3909	25	51	2168	10	0	0	0	3	0	6
Ideal Flow (vphpl)	1900	1900	1900	1900	1900	1900	1900	1900	1900	1900	1900	1900
Storage Length (ft)	50		0	50		0	0		0	0		90
Storage Lanes	1		0	0		0	0		0	1		1
Taper Length (ft)	25			25			25			25		
Lane Util. Factor	1.00	0.91	0.91	0.91	0.91	0.91	1.00	1.00	1.00	1.00	1.00	1.00
Ped Bike Factor												
Frt		0.999			0.999							0.850
Flt Protected	0.950				0.999					0.950		
Satd. Flow (prot)	1770	5080	0	0	5075	0	0	1863	0	1433	0	1282
Flt Permitted	0.950				0.999					0.950		
Satd. Flow (perm)	1770	5080	0	0	5075	0	0	1863	0	1433	0	1282
Link Speed (mph)		30			30			30			30	
Link Distance (ft)		1738			387			292			477	
Travel Time (s)		39.5			8.8			6.6			10.8	
Confl. Peds. (#/hr)	10					10						
Peak Hour Factor	0.99	0.99	0.99	0.99	0.99	0.99	0.99	0.99	0.99	0.99	0.92	0.99
Heavy Vehicles (%)	2%	2%	2%	2%	2%	2%	2%	2%	2%	26%	2%	26%
Adj. Flow (vph)	10	3948	25	52	2190	10	0	0	0	3	0	6
Shared Lane Traffic (%)												
Lane Group Flow (vph)	10	3973	0	0	2252	0	0	0	0	3	0	6
Enter Blocked Intersection	No	No	No	No	No	No	No	No	No	No	No	No
Lane Alignment	Left	Left	Right	Left	Left	Right	Left	Left	Right	Left	Left	Right
Median Width(ft)		12			12			12			12	
Link Offset(ft)		0			0			0			0	
Crosswalk Width(ft)		16			16			16			16	
Two way Left Turn Lane												
Headway Factor	1.00	1.00	1.00	1.00	1.00	1.00	1.00	1.00	1.00	1.00	1.00	1.00
Turning Speed (mph)	15		9	15		9	15		9	15		9
Sign Control		Free			Free			Stop			Stop	

Intersection Summary	
Area Type:	Other
Control Type: Unsignalized	
Intersection Capacity Utilization 88.6%	ICU Level of Service E
Analysis Period (min) 15	

Lane Group	EBL	EBT	EBR	WBL	WBT	WBR	NBL	NBT	NBR	SBL	SBT	SBR
Lane Configurations												
Traffic Volume (vph)	203	3353	103	14	2438	25	0	0	64	0	0	112
Future Volume (vph)	203	3353	103	14	2438	25	0	0	64	0	0	112
Ideal Flow (vphpl)	1900	1900	1900	1900	1900	1900	1900	1900	1900	1900	1900	1900
Storage Length (ft)	0		0	120		0	0		0	0		0
Storage Lanes	1		0	1		0	0		1	0		1
Taper Length (ft)	25			25			25			25		
Lane Util. Factor	1.00	0.91	0.91	1.00	0.91	0.91	1.00	1.00	1.00	1.00	1.00	1.00
Ped Bike Factor												
Frt		0.996			0.998				0.865			0.865
Flt Protected	0.950			0.950								
Satd. Flow (prot)	1770	5065	0	1770	5075	0	0	0	1611	0	0	1611
Flt Permitted	0.950			0.950								
Satd. Flow (perm)	1770	5065	0	1770	5075	0	0	0	1611	0	0	1611
Link Speed (mph)		30			30			30			30	
Link Distance (ft)		134			4054			653			1966	
Travel Time (s)		3.0			92.1			14.8			44.7	
Confl. Peds. (#/hr)			1	1			2					2
Peak Hour Factor	0.95	0.95	0.95	0.95	0.95	0.95	0.95	0.95	0.95	0.95	0.95	0.95
Adj. Flow (vph)	214	3529	108	15	2566	26	0	0	67	0	0	118
Shared Lane Traffic (%)												
Lane Group Flow (vph)	214	3637	0	15	2592	0	0	0	67	0	0	118
Enter Blocked Intersection	No	No	No	No	No	No	No	No	No	No	No	No
Lane Alignment	Left	Left	Right	Left	Left	Right	Left	Left	Right	Left	Left	Right
Median Width(ft)		12			12			0			0	
Link Offset(ft)		0			0			0			0	
Crosswalk Width(ft)		16			16			16			16	
Two way Left Turn Lane												
Headway Factor	1.00	1.00	1.00	1.00	1.00	1.00	1.00	1.00	1.00	1.00	1.00	1.00
Turning Speed (mph)	15		9	15		9	15		9	15		9
Sign Control		Free			Free			Stop			Stop	

Intersection Summary	
Area Type:	Other
Control Type: Unsignalized	
Intersection Capacity Utilization 77.7%	ICU Level of Service D
Analysis Period (min) 15	

Lane Group	EBT	EBR	WBL	WBT	NBL	NBR
Lane Configurations						
Traffic Volume (vph)	1810	193	84	993	38	38
Future Volume (vph)	1810	193	84	993	38	38
Ideal Flow (vphpl)	1900	1900	1900	1900	1900	1900
Storage Length (ft)		0	80		0	0
Storage Lanes		0	1		1	0
Taper Length (ft)			25		25	
Lane Util. Factor	0.95	0.95	1.00	0.95	1.00	1.00
Ped Bike Factor						
Frt	0.986				0.932	
Flt Protected			0.950		0.976	
Satd. Flow (prot)	3490	0	1770	3539	1711	0
Flt Permitted			0.950		0.976	
Satd. Flow (perm)	3490	0	1770	3539	1711	0
Link Speed (mph)	30			30	30	
Link Distance (ft)	2216			231	1151	
Travel Time (s)	50.4			5.3	26.2	
Confl. Peds. (#/hr)		3	3			
Peak Hour Factor	0.91	0.91	0.91	0.91	0.91	0.91
Heavy Vehicles (%)	2%	2%	2%	2%	1%	1%
Adj. Flow (vph)	1989	212	92	1091	42	42
Shared Lane Traffic (%)						
Lane Group Flow (vph)	2201	0	92	1091	84	0
Enter Blocked Intersection	No	No	No	No	No	No
Lane Alignment	Left	Right	Left	Left	Left	Right
Median Width(ft)	12			12	12	
Link Offset(ft)	0			0	0	
Crosswalk Width(ft)	16			16	16	
Two way Left Turn Lane						
Headway Factor	1.00	1.00	1.00	1.00	1.00	1.00
Turning Speed (mph)		9	15		15	9
Sign Control	Free			Free	Stop	

Intersection Summary	
Area Type:	Other
Control Type: Unsignalized	
Intersection Capacity Utilization 75.3%	ICU Level of Service D
Analysis Period (min) 15	

Lane Group	EBT	EBR	WBL	WBT	NBL	NBR
Lane Configurations						
Traffic Volume (vph)	2008	94	34	913	5	52
Future Volume (vph)	2008	94	34	913	5	52
Ideal Flow (vphpl)	1900	1900	1900	1900	1900	1900
Storage Length (ft)		0	80		0	0
Storage Lanes		0	1		1	0
Taper Length (ft)			25		25	
Lane Util. Factor	0.95	0.95	1.00	0.95	1.00	1.00
Ped Bike Factor						
Frt	0.993				0.876	
Flt Protected			0.950		0.996	
Satd. Flow (prot)	3514	0	1770	3539	1609	0
Flt Permitted			0.950		0.996	
Satd. Flow (perm)	3514	0	1770	3539	1609	0
Link Speed (mph)	30			30	30	
Link Distance (ft)	228			2182	751	
Travel Time (s)	5.2			49.6	17.1	
Confl. Peds. (#/hr)		2	2			
Peak Hour Factor	0.91	0.91	0.91	0.91	0.91	0.91
Heavy Vehicles (%)	2%	2%	2%	2%	3%	3%
Adj. Flow (vph)	2207	103	37	1003	5	57
Shared Lane Traffic (%)						
Lane Group Flow (vph)	2310	0	37	1003	62	0
Enter Blocked Intersection	No	No	No	No	No	No
Lane Alignment	Left	Right	Left	Left	Left	Right
Median Width(ft)	12			12	12	
Link Offset(ft)	0			0	0	
Crosswalk Width(ft)	16			16	16	
Two way Left Turn Lane						
Headway Factor	1.00	1.00	1.00	1.00	1.00	1.00
Turning Speed (mph)		9	15		15	9
Sign Control	Free			Free	Stop	

Intersection Summary	
Area Type:	Other
Control Type: Unsignalized	
Intersection Capacity Utilization 68.7%	ICU Level of Service C
Analysis Period (min) 15	

Lane Group	EBL	EBT	WBT	WBR	SBL	SBR
Lane Configurations						
Traffic Volume (vph)	11	2152	741	6	4	17
Future Volume (vph)	11	2152	741	6	4	17
Ideal Flow (vphpl)	1900	1900	1900	1900	1900	1900
Storage Length (ft)	135			0	0	0
Storage Lanes	1			0	1	0
Taper Length (ft)	25				25	
Lane Util. Factor	1.00	0.95	0.95	0.95	1.00	1.00
Ped Bike Factor						
Frt			0.999		0.890	
Flt Protected	0.950				0.991	
Satd. Flow (prot)	1787	3574	3571	0	1659	0
Flt Permitted	0.950				0.991	
Satd. Flow (perm)	1787	3574	3571	0	1659	0
Link Speed (mph)		30	30		30	
Link Distance (ft)		401	7150		2598	
Travel Time (s)		9.1	162.5		59.0	
Confl. Peds. (#/hr)	2			2		
Peak Hour Factor	0.97	0.97	0.97	0.97	0.97	0.97
Heavy Vehicles (%)	1%	1%	1%	1%	1%	1%
Adj. Flow (vph)	11	2219	764	6	4	18
Shared Lane Traffic (%)						
Lane Group Flow (vph)	11	2219	770	0	22	0
Enter Blocked Intersection	No	No	No	No	No	No
Lane Alignment	Left	Left	Left	Right	Left	Right
Median Width(ft)		12	12		12	
Link Offset(ft)		0	0		0	
Crosswalk Width(ft)		16	16		16	
Two way Left Turn Lane						
Headway Factor	1.00	1.00	1.00	1.00	1.00	1.00
Turning Speed (mph)	15			9	15	9
Sign Control		Free	Free		Stop	

Intersection Summary	
Area Type:	Other
Control Type: Unsignalized	
Intersection Capacity Utilization 69.5%	ICU Level of Service C
Analysis Period (min) 15	

Lane Group	EBT	EBR	WBL	WBT	NBL	NBR
Lane Configurations						
Traffic Volume (vph)	686	19	56	231	113	536
Future Volume (vph)	686	19	56	231	113	536
Ideal Flow (vphpl)	1900	1900	1900	1900	1900	1900
Lane Util. Factor	1.00	1.00	1.00	1.00	0.97	1.00
Ped Bike Factor	1.00		1.00			
Frt	0.996					0.850
Flt Protected			0.950		0.950	
Satd. Flow (prot)	1855	0	1787	1881	3400	1568
Flt Permitted			0.202		0.950	
Satd. Flow (perm)	1855	0	380	1881	3400	1568
Right Turn on Red		Yes				Yes
Satd. Flow (RTOR)	2					437
Link Speed (mph)	30			30	30	
Link Distance (ft)	155			1747	395	
Travel Time (s)	3.5			39.7	9.0	
Confl. Peds. (#/hr)		1	1			6
Peak Hour Factor	0.96	0.96	0.96	0.96	0.96	0.96
Heavy Vehicles (%)	2%	2%	1%	1%	3%	3%
Adj. Flow (vph)	715	20	58	241	118	558
Shared Lane Traffic (%)						
Lane Group Flow (vph)	735	0	58	241	118	558
Enter Blocked Intersection	No	No	No	No	No	No
Lane Alignment	Left	Right	Left	Left	Left	Right
Median Width(ft)	12			12	24	
Link Offset(ft)	0			0	0	
Crosswalk Width(ft)	16			16	16	
Two way Left Turn Lane						
Headway Factor	1.00	1.00	1.00	1.00	1.00	1.00
Turning Speed (mph)		9	15		15	9
Number of Detectors	2		1	2	1	1
Detector Template	Thru		Left	Thru	Left	Right
Leading Detector (ft)	100		20	100	20	20
Trailing Detector (ft)	0		0	0	0	0
Detector 1 Position(ft)	0		0	0	0	0
Detector 1 Size(ft)	6		20	6	20	20
Detector 1 Type	Cl+Ex		Cl+Ex	Cl+Ex	Cl+Ex	Cl+Ex
Detector 1 Channel						
Detector 1 Extend (s)	0.0		0.0	0.0	0.0	0.0
Detector 1 Queue (s)	0.0		0.0	0.0	0.0	0.0
Detector 1 Delay (s)	0.0		0.0	0.0	0.0	0.0
Detector 2 Position(ft)	94			94		
Detector 2 Size(ft)	6			6		
Detector 2 Type	Cl+Ex			Cl+Ex		
Detector 2 Channel						
Detector 2 Extend (s)	0.0			0.0		
Turn Type	NA		pm+pt	NA	Perm	Over
Protected Phases	6		5	2		5
Permitted Phases			2		4	

Lane Group	EBT	EBR	WBL	WBT	NBL	NBR
Detector Phase	6		5	2	4	5
Switch Phase						
Minimum Initial (s)	15.0		5.0	15.0	7.0	5.0
Minimum Split (s)	22.5		12.2	22.5	17.0	12.2
Total Split (s)	48.0		14.0	62.0	24.0	14.0
Total Split (%)	55.8%		16.3%	72.1%	27.9%	16.3%
Maximum Green (s)	40.5		6.8	54.5	18.0	6.8
Yellow Time (s)	4.0		3.7	4.0	4.0	3.7
All-Red Time (s)	3.5		3.5	3.5	2.0	3.5
Lost Time Adjust (s)	0.0		0.0	0.0	0.0	0.0
Total Lost Time (s)	7.5		7.2	7.5	6.0	7.2
Lead/Lag	Lag		Lead			Lead
Lead-Lag Optimize?	Yes		Yes			Yes
Vehicle Extension (s)	1.0		2.0	1.0	2.5	2.0
Recall Mode	Max		None	Max	None	None
Walk Time (s)					2.0	
Flash Dont Walk (s)					9.0	
Pedestrian Calls (#/hr)					0	
Act Effct Green (s)	40.8		55.2	56.7	7.9	6.9
Actuated g/C Ratio	0.56		0.75	0.77	0.11	0.09
v/c Ratio	0.71		0.14	0.17	0.32	1.03
Control Delay	18.0		3.9	3.7	33.9	57.8
Queue Delay	0.0		0.0	0.0	0.0	0.0
Total Delay	18.0		3.9	3.7	33.9	57.8
LOS	B		A	A	C	E
Approach Delay	18.0			3.7	53.7	
Approach LOS	B			A	D	

Intersection Summary	
Area Type: Other	
Cycle Length: 86	
Actuated Cycle Length: 73.3	
Natural Cycle: 90	
Control Type: Actuated-Uncoordinated	
Maximum v/c Ratio: 1.03	
Intersection Signal Delay: 29.6	Intersection LOS: C
Intersection Capacity Utilization 83.3%	ICU Level of Service E
Analysis Period (min) 15	

Splits and Phases: 16: SW 70th Ave & SW 80th St

Lane Group	EBL	EBT	WBT	WBR	SBL	SBR
Lane Configurations						
Traffic Volume (vph)	18	559	337	11	11	39
Future Volume (vph)	18	559	337	11	11	39
Ideal Flow (vphpl)	1900	1900	1900	1900	1900	1900
Lane Util. Factor	1.00	1.00	1.00	1.00	1.00	1.00
Ped Bike Factor						
Frt			0.996		0.896	
Flt Protected		0.998			0.989	
Satd. Flow (prot)	0	1859	1874	0	1667	0
Flt Permitted		0.998			0.989	
Satd. Flow (perm)	0	1859	1874	0	1667	0
Link Speed (mph)		30	30		30	
Link Distance (ft)		235	1246		617	
Travel Time (s)		5.3	28.3		14.0	
Confl. Peds. (#/hr)	2			2		
Peak Hour Factor	0.95	0.95	0.95	0.95	0.95	0.95
Heavy Vehicles (%)	2%	2%	1%	1%	1%	1%
Adj. Flow (vph)	19	588	355	12	12	41
Shared Lane Traffic (%)						
Lane Group Flow (vph)	0	607	367	0	53	0
Enter Blocked Intersection	No	No	No	No	No	No
Lane Alignment	Left	Left	Left	Right	Left	Right
Median Width(ft)		0	0		12	
Link Offset(ft)		0	0		0	
Crosswalk Width(ft)		16	16		16	
Two way Left Turn Lane						
Headway Factor	1.00	1.00	1.00	1.00	1.00	1.00
Turning Speed (mph)	15			9	15	9
Sign Control		Free	Free		Stop	

Intersection Summary	
Area Type:	Other
Control Type: Unsignalized	
Intersection Capacity Utilization 54.0%	ICU Level of Service A
Analysis Period (min) 15	

Lane Group	EBL	EBT	WBT	WBR	SBL	SBR
Lane Configurations						
Traffic Volume (vph)	5	2197	696	3	5	6
Future Volume (vph)	5	2197	696	3	5	6
Ideal Flow (vphpl)	1900	1900	1900	1900	1900	1900
Storage Length (ft)	60			0	0	0
Storage Lanes	1			0	1	0
Taper Length (ft)	25				25	
Lane Util. Factor	1.00	0.95	0.95	0.95	1.00	1.00
Ped Bike Factor						
Frt			0.999		0.926	
Flt Protected	0.950				0.978	
Satd. Flow (prot)	1787	3574	3571	0	1671	0
Flt Permitted	0.950				0.978	
Satd. Flow (perm)	1787	3574	3571	0	1671	0
Link Speed (mph)		30	30		30	
Link Distance (ft)		1866	224		577	
Travel Time (s)		42.4	5.1		13.1	
Confl. Peds. (#/hr)	3			3		
Peak Hour Factor	0.93	0.93	0.93	0.93	0.93	0.93
Heavy Vehicles (%)	1%	1%	1%	1%	3%	3%
Adj. Flow (vph)	5	2362	748	3	5	6
Shared Lane Traffic (%)						
Lane Group Flow (vph)	5	2362	751	0	11	0
Enter Blocked Intersection	No	No	No	No	No	No
Lane Alignment	Left	Left	Left	Right	Left	Right
Median Width(ft)		12	12		12	
Link Offset(ft)		0	0		0	
Crosswalk Width(ft)		16	16		16	
Two way Left Turn Lane						
Headway Factor	1.00	1.00	1.00	1.00	1.00	1.00
Turning Speed (mph)	15			9	15	9
Sign Control		Free	Free		Stop	

Intersection Summary	
Area Type:	Other
Control Type: Unsignalized	
Intersection Capacity Utilization 70.7%	ICU Level of Service C
Analysis Period (min) 15	

Lane Group	EBL	EBT	EBR	WBL	WBT	WBR	NBL	NBT	NBR	SBL	SBT	SBR
Lane Configurations												
Traffic Volume (vph)	27	151	33	0	1	0	1	3	0	325	38	13
Future Volume (vph)	27	151	33	0	1	0	1	3	0	325	38	13
Ideal Flow (vphpl)	1900	1900	1900	1900	1900	1900	1900	1900	1900	1900	1900	1900
Lane Util. Factor	1.00	1.00	1.00	1.00	1.00	1.00	1.00	1.00	1.00	1.00	1.00	1.00
Ped Bike Factor												
Frt		0.979									0.995	
Flt Protected		0.994						0.990			0.959	
Satd. Flow (prot)	0	1831	0	0	1881	0	0	1862	0	0	1795	0
Flt Permitted		0.994						0.990			0.959	
Satd. Flow (perm)	0	1831	0	0	1881	0	0	1862	0	0	1795	0
Link Speed (mph)		30			30			30			30	
Link Distance (ft)		265			1151			219			613	
Travel Time (s)		6.0			26.2			5.0			13.9	
Confl. Peds. (#/hr)	3		68	68		3	1		85	85		1
Peak Hour Factor	0.82	0.82	0.82	0.82	0.82	0.82	0.82	0.82	0.82	0.82	0.82	0.82
Heavy Vehicles (%)	1%	1%	1%	1%	1%	1%	1%	1%	1%	1%	1%	1%
Adj. Flow (vph)	33	184	40	0	1	0	1	4	0	396	46	16
Shared Lane Traffic (%)												
Lane Group Flow (vph)	0	257	0	0	1	0	0	5	0	0	458	0
Enter Blocked Intersection	No	No	No	No	No	No	No	No	No	No	No	No
Lane Alignment	Left	Left	Right	Left	Left	Right	Left	Left	Right	Left	Left	Right
Median Width(ft)		0			0			0			0	
Link Offset(ft)		0			0			0			0	
Crosswalk Width(ft)		16			16			16			16	
Two way Left Turn Lane												
Headway Factor	1.00	1.00	1.00	1.00	1.00	1.00	1.00	1.00	1.00	1.00	1.00	1.00
Turning Speed (mph)	15		9	15		9	15		9	15		9
Sign Control		Stop			Stop			Stop			Stop	

Intersection Summary	
Area Type:	Other
Control Type: Unsignalized	
Intersection Capacity Utilization 53.0%	ICU Level of Service A
Analysis Period (min) 15	

Synchro Inputs – Future Condition - PM

Lane Group	EBL	EBT	EBR	WBL	WBT	WBR	NBL	NBT	NBR	SBL	SBT	SBR
Lane Configurations												
Traffic Volume (vph)	3	1823	121	48	1938	5	142	78	20	8	105	338
Future Volume (vph)	3	1823	121	48	1938	5	142	78	20	8	105	338
Ideal Flow (vphpl)	1900	1900	1900	1900	1900	1900	1900	1900	1900	1900	1900	1900
Storage Length (ft)	0		0	110		0	120		0	80		0
Storage Lanes	0		0	1		0	1		0	1		1
Taper Length (ft)	25			25			25			25		
Lane Util. Factor	0.95	0.95	0.95	1.00	0.95	0.95	1.00	1.00	1.00	1.00	1.00	1.00
Ped Bike Factor					1.00		1.00	1.00		0.99		0.99
Frt		0.991						0.969				0.850
Flt Protected				0.950			0.950			0.950		
Satd. Flow (prot)	0	3507	0	1752	3504	0	1719	1746	0	1770	1863	1583
Flt Permitted		0.951		0.032			0.608			0.625		
Satd. Flow (perm)	0	3336	0	59	3504	0	1098	1746	0	1157	1863	1561
Right Turn on Red			Yes			Yes			Yes			Yes
Satd. Flow (RTOR)		8						6				57
Link Speed (mph)		30			30			30			30	
Link Distance (ft)		171			3106			1344			634	
Travel Time (s)		3.9			70.6			30.5			14.4	
Confl. Peds. (#/hr)	8					8	1		3	3		1
Peak Hour Factor	0.93	0.93	0.93	0.93	0.93	0.93	0.93	0.93	0.93	0.93	0.93	0.93
Heavy Vehicles (%)	2%	2%	2%	3%	3%	3%	5%	5%	5%	2%	2%	2%
Adj. Flow (vph)	3	1960	130	52	2084	5	153	84	22	9	113	363
Shared Lane Traffic (%)												
Lane Group Flow (vph)	0	2093	0	52	2089	0	153	106	0	9	113	363
Enter Blocked Intersection	No	No	No	No	No	No	No	No	No	No	No	No
Lane Alignment	Left	Left	Right	Left	Left	Right	Left	Left	Right	Left	Left	Right
Median Width(ft)		12			12			12			12	
Link Offset(ft)		0			0			0			0	
Crosswalk Width(ft)		16			16			16			16	
Two way Left Turn Lane												
Headway Factor	1.00	1.00	1.00	1.00	1.00	1.00	1.00	1.00	1.00	1.00	1.00	1.00
Turning Speed (mph)	15		9	15		9	15		9	15		9
Number of Detectors	1	2		1	2		1	2		1	2	1
Detector Template	Left	Thru		Left	Thru		Left	Thru		Left	Thru	Right
Leading Detector (ft)	20	100		20	100		20	100		20	100	20
Trailing Detector (ft)	0	0		0	0		0	0		0	0	0
Detector 1 Position(ft)	0	0		0	0		0	0		0	0	0
Detector 1 Size(ft)	20	6		20	6		20	6		20	6	20
Detector 1 Type	Cl+Ex	Cl+Ex		Cl+Ex	Cl+Ex		Cl+Ex	Cl+Ex		Cl+Ex	Cl+Ex	Cl+Ex
Detector 1 Channel												
Detector 1 Extend (s)	0.0	0.0		0.0	0.0		0.0	0.0		0.0	0.0	0.0
Detector 1 Queue (s)	0.0	0.0		0.0	0.0		0.0	0.0		0.0	0.0	0.0
Detector 1 Delay (s)	0.0	0.0		0.0	0.0		0.0	0.0		0.0	0.0	0.0
Detector 2 Position(ft)		94			94			94			94	
Detector 2 Size(ft)		6			6			6			6	
Detector 2 Type		Cl+Ex			Cl+Ex			Cl+Ex			Cl+Ex	
Detector 2 Channel												
Detector 2 Extend (s)		0.0			0.0			0.0			0.0	

Lane Group	EBL	EBT	EBR	WBL	WBT	WBR	NBL	NBT	NBR	SBL	SBT	SBR
Turn Type	Perm	NA		pm+pt	NA		Perm	NA		Perm	NA	Perm
Protected Phases		6		5	2			4			8	
Permitted Phases	6			2			4			8		8
Detector Phase	6	6		5	2		4	4		8	8	8
Switch Phase												
Minimum Initial (s)	7.0	7.0		5.0	7.0		7.0	7.0		7.0	7.0	7.0
Minimum Split (s)	29.4	29.4		11.0	29.4		28.0	28.0		28.0	28.0	28.0
Total Split (s)	126.0	126.0		14.0	140.0		40.0	40.0		40.0	40.0	40.0
Total Split (%)	70.0%	70.0%		7.8%	77.8%		22.2%	22.2%		22.2%	22.2%	22.2%
Maximum Green (s)	119.6	119.6		8.0	133.6		34.0	34.0		34.0	34.0	34.0
Yellow Time (s)	4.4	4.4		4.0	4.4		4.0	4.0		4.0	4.0	4.0
All-Red Time (s)	2.0	2.0		2.0	2.0		2.0	2.0		2.0	2.0	2.0
Lost Time Adjust (s)		0.0		0.0	0.0		0.0	0.0		0.0	0.0	0.0
Total Lost Time (s)		6.4		6.0	6.4		6.0	6.0		6.0	6.0	6.0
Lead/Lag	Lag	Lag		Lead								
Lead-Lag Optimize?	Yes	Yes		Yes								
Vehicle Extension (s)	1.0	1.0		2.0	1.0		2.5	2.5		2.5	2.5	2.5
Recall Mode	None	None		Max	C-Min		Max	Max		Max	Max	Max
Walk Time (s)	7.0	7.0			7.0		7.0	7.0		7.0	7.0	7.0
Flash Dont Walk (s)	16.0	16.0			16.0		15.0	15.0		15.0	15.0	15.0
Pedestrian Calls (#/hr)	0	0			0		0	0		0	0	0
Act Effct Green (s)		119.6		134.0	133.6		34.0	34.0		34.0	34.0	34.0
Actuated g/C Ratio		0.66		0.74	0.74		0.19	0.19		0.19	0.19	0.19
v/c Ratio		0.94		0.44	0.80		0.74	0.32		0.04	0.32	1.06
Control Delay		37.2		30.7	18.0		90.3	62.4		60.5	66.0	122.5
Queue Delay		0.0		0.0	0.0		0.0	0.0		0.0	0.0	0.0
Total Delay		37.2		30.7	18.0		90.3	62.4		60.5	66.0	122.5
LOS		D		C	B		F	E		E	E	F
Approach Delay		37.2			18.3			78.9			108.2	
Approach LOS		D			B			E			F	

Intersection Summary	
Area Type: Other	
Cycle Length: 180	
Actuated Cycle Length: 180	
Offset: 17 (9%), Referenced to phase 2:WBTL, Start of Yellow	
Natural Cycle: 130	
Control Type: Actuated-Coordinated	
Maximum v/c Ratio: 1.06	
Intersection Signal Delay: 38.1	Intersection LOS: D
Intersection Capacity Utilization 98.0%	ICU Level of Service F
Analysis Period (min) 15	

Splits and Phases: 1: SW 69th Ave/NW 69th Ave & W Flagler St

Lane Group	EBL	EBT	WBT	WBR	SBL	SBR
Lane Configurations						
Traffic Volume (vph)	22	2056	2401	15	5	20
Future Volume (vph)	22	2056	2401	15	5	20
Ideal Flow (vphpl)	1900	1900	1900	1900	1900	1900
Storage Length (ft)	125			0	0	0
Storage Lanes	1			0	1	0
Taper Length (ft)	25				25	
Lane Util. Factor	1.00	0.95	0.95	0.95	1.00	1.00
Ped Bike Factor						
Frt			0.999		0.891	
Flt Protected	0.950				0.990	
Satd. Flow (prot)	1787	3574	3571	0	1659	0
Flt Permitted	0.950				0.990	
Satd. Flow (perm)	1787	3574	3571	0	1659	0
Link Speed (mph)		30	30		30	
Link Distance (ft)		2193	130		251	
Travel Time (s)		49.8	3.0		5.7	
Confl. Peds. (#/hr)	8			8	1	4
Peak Hour Factor	0.97	0.97	0.97	0.97	0.97	0.97
Heavy Vehicles (%)	1%	1%	1%	1%	1%	1%
Adj. Flow (vph)	23	2120	2475	15	5	21
Shared Lane Traffic (%)						
Lane Group Flow (vph)	23	2120	2490	0	26	0
Enter Blocked Intersection	No	No	No	No	No	No
Lane Alignment	Left	Left	Left	Right	Left	Right
Median Width(ft)		12	12		12	
Link Offset(ft)		0	0		0	
Crosswalk Width(ft)		16	16		16	
Two way Left Turn Lane						
Headway Factor	1.00	1.00	1.00	1.00	1.00	1.00
Turning Speed (mph)	15			9	15	9
Sign Control		Free	Free		Stop	

Intersection Summary	
Area Type:	Other
Control Type: Unsignalized	
Intersection Capacity Utilization 78.1%	ICU Level of Service D
Analysis Period (min) 15	

Lane Group	EBL	EBT	EBR	WBL	WBT	WBR	NBL	NBT	NBR	SBL	SBT	SBR
Lane Configurations												
Traffic Volume (vph)	25	255	70	15	563	18	150	62	6	14	103	153
Future Volume (vph)	25	255	70	15	563	18	150	62	6	14	103	153
Ideal Flow (vphpl)	1900	1900	1900	1900	1900	1900	1900	1900	1900	1900	1900	1900
Lane Util. Factor	1.00	1.00	1.00	1.00	1.00	1.00	1.00	1.00	1.00	1.00	1.00	1.00
Ped Bike Factor												
Frt		0.973			0.996			0.996			0.924	
Flt Protected		0.996			0.999			0.967			0.997	
Satd. Flow (prot)	0	1770	0	0	1853	0	0	1777	0	0	1651	0
Flt Permitted		0.996			0.999			0.967			0.997	
Satd. Flow (perm)	0	1770	0	0	1853	0	0	1777	0	0	1651	0
Link Speed (mph)		30			30			30			30	
Link Distance (ft)		175			3048			1367			1344	
Travel Time (s)		4.0			69.3			31.1			30.5	
Confl. Peds. (#/hr)							2		2	2		2
Peak Hour Factor	0.96	0.96	0.96	0.96	0.96	0.96	0.96	0.96	0.96	0.96	0.96	0.96
Heavy Vehicles (%)	4%	4%	4%	2%	2%	2%	3%	3%	3%	6%	6%	6%
Adj. Flow (vph)	26	266	73	16	586	19	156	65	6	15	107	159
Shared Lane Traffic (%)												
Lane Group Flow (vph)	0	365	0	0	621	0	0	227	0	0	281	0
Enter Blocked Intersection	No	No	No	No	No	No	No	No	No	No	No	No
Lane Alignment	Left	Left	Right	Left	Left	Right	Left	Left	Right	Left	Left	Right
Median Width(ft)		0			0			12			12	
Link Offset(ft)		0			0			0			0	
Crosswalk Width(ft)		16			16			16			16	
Two way Left Turn Lane												
Headway Factor	1.00	1.00	1.00	1.00	1.00	1.00	1.00	1.00	1.00	1.00	1.00	1.00
Turning Speed (mph)	15		9	15		9	15		9	15		9
Sign Control		Stop			Stop			Stop			Stop	

Intersection Summary			
Area Type:	Other		
Control Type: Unsignalized			
Intersection Capacity Utilization 72.4%		ICU Level of Service C	
Analysis Period (min) 15			

Lane Group	EBL	EBT	EBR	WBL	WBT	WBR	NBL	NBT	NBR	SBL	SBT	SBR
Lane Configurations												
Traffic Volume (vph)	78	1645	43	50	1763	130	66	27	53	92	33	83
Future Volume (vph)	78	1645	43	50	1763	130	66	27	53	92	33	83
Ideal Flow (vphpl)	1900	1900	1900	1900	1900	1900	1900	1900	1900	1900	1900	1900
Storage Length (ft)	100		0	45		0	0		0	0		0
Storage Lanes	1		0	1		0	0		0	0		1
Taper Length (ft)	25			25			25			25		
Lane Util. Factor	1.00	0.95	0.95	1.00	0.95	0.95	1.00	1.00	1.00	1.00	1.00	1.00
Ped Bike Factor		1.00			1.00			0.99				
Frt		0.996			0.990			0.951				0.850
Flt Protected	0.950			0.950				0.978			0.965	
Satd. Flow (prot)	1787	3555	0	1770	3487	0	0	1702	0	0	1780	1568
Flt Permitted	0.039			0.068				0.789			0.553	
Satd. Flow (perm)	73	3555	0	127	3487	0	0	1373	0	0	1020	1568
Right Turn on Red			Yes			Yes			Yes			Yes
Satd. Flow (RTOR)		3			9			12				25
Link Speed (mph)		30			30			30			30	
Link Distance (ft)		3163			226			1301			124	
Travel Time (s)		71.9			5.1			29.6			2.8	
Confl. Peds. (#/hr)	12		8	8		12			3	3		
Peak Hour Factor	0.92	0.92	0.92	0.92	0.92	0.92	0.92	0.92	0.92	0.92	0.92	0.92
Heavy Vehicles (%)	1%	1%	1%	2%	2%	2%	3%	3%	3%	3%	3%	3%
Adj. Flow (vph)	85	1788	47	54	1916	141	72	29	58	100	36	90
Shared Lane Traffic (%)												
Lane Group Flow (vph)	85	1835	0	54	2057	0	0	159	0	0	136	90
Enter Blocked Intersection	No	No	No	No	No	No	No	No	No	No	No	No
Lane Alignment	Left	Left	Right	Left	Left	Right	Left	Left	Right	Left	Left	Right
Median Width(ft)		12			12			0			0	
Link Offset(ft)		0			0			0			0	
Crosswalk Width(ft)		16			16			16			16	
Two way Left Turn Lane												
Headway Factor	1.00	1.00	1.00	1.00	1.00	1.00	1.00	1.00	1.00	1.00	1.00	1.00
Turning Speed (mph)	15		9	15		9	15		9	15		9
Number of Detectors	1	2		1	2		1	2		1	2	1
Detector Template	Left	Thru		Left	Thru		Left	Thru		Left	Thru	Right
Leading Detector (ft)	20	100		20	100		20	100		20	100	20
Trailing Detector (ft)	0	0		0	0		0	0		0	0	0
Detector 1 Position(ft)	0	0		0	0		0	0		0	0	0
Detector 1 Size(ft)	20	6		20	6		20	6		20	6	20
Detector 1 Type	Cl+Ex	Cl+Ex		Cl+Ex	Cl+Ex		Cl+Ex	Cl+Ex		Cl+Ex	Cl+Ex	Cl+Ex
Detector 1 Channel												
Detector 1 Extend (s)	0.0	0.0		0.0	0.0		0.0	0.0		0.0	0.0	0.0
Detector 1 Queue (s)	0.0	0.0		0.0	0.0		0.0	0.0		0.0	0.0	0.0
Detector 1 Delay (s)	0.0	0.0		0.0	0.0		0.0	0.0		0.0	0.0	0.0
Detector 2 Position(ft)		94			94			94			94	
Detector 2 Size(ft)		6			6			6			6	
Detector 2 Type		Cl+Ex			Cl+Ex			Cl+Ex			Cl+Ex	
Detector 2 Channel												
Detector 2 Extend (s)		0.0			0.0			0.0			0.0	

Lane Group	EBL	EBT	EBR	WBL	WBT	WBR	NBL	NBT	NBR	SBL	SBT	SBR
Turn Type	pm+pt	NA		pm+pt	NA		Perm	NA		pm+pt	NA	pm+ov
Protected Phases	1	6		5	2			4		3	8	1
Permitted Phases	6			2			4			8		8
Detector Phase	1	6		5	2		4	4		3	8	1
Switch Phase												
Minimum Initial (s)	5.0	7.0		5.0	7.0		7.0	7.0		5.0	7.0	5.0
Minimum Split (s)	11.0	29.0		11.0	29.0		24.0	24.0		11.0	13.0	11.0
Total Split (s)	13.0	139.0		13.0	139.0		26.0	26.0		12.0	38.0	13.0
Total Split (%)	6.8%	73.2%		6.8%	73.2%		13.7%	13.7%		6.3%	20.0%	6.8%
Maximum Green (s)	7.0	133.0		7.0	133.0		20.0	20.0		6.0	32.0	7.0
Yellow Time (s)	4.0	4.0		4.0	4.0		4.0	4.0		4.0	4.0	4.0
All-Red Time (s)	2.0	2.0		2.0	2.0		2.0	2.0		2.0	2.0	2.0
Lost Time Adjust (s)	0.0	0.0		0.0	0.0			0.0			0.0	0.0
Total Lost Time (s)	6.0	6.0		6.0	6.0			6.0			6.0	6.0
Lead/Lag	Lead	Lag		Lead	Lag		Lag	Lag		Lead		Lead
Lead-Lag Optimize?	Yes	Yes		Yes	Yes		Yes	Yes		Yes		Yes
Vehicle Extension (s)	3.0	1.0		3.0	1.0		2.5	2.5		3.0	2.5	3.0
Recall Mode	Max	C-Min		Max	C-Min		Max	Max		Max	Max	Max
Walk Time (s)		5.0			5.0		5.0	5.0				
Flash Dont Walk (s)		18.0			18.0		13.0	13.0				
Pedestrian Calls (#/hr)		0			0		0	0				
Act Effct Green (s)	140.0	133.0		140.0	133.0			20.0			32.0	45.0
Actuated g/C Ratio	0.74	0.70		0.74	0.70			0.11			0.17	0.24
v/c Ratio	0.73	0.74		0.35	0.84			1.03			0.70	0.23
Control Delay	62.2	19.9		11.7	25.0			151.8			92.2	43.7
Queue Delay	0.0	0.0		0.0	0.0			0.0			0.0	0.0
Total Delay	62.2	19.9		11.7	25.0			151.8			92.2	43.7
LOS	E	B		B	C			F			F	D
Approach Delay		21.8			24.6			151.8			72.9	
Approach LOS		C			C			F			E	

Intersection Summary	
Area Type:	Other
Cycle Length: 190	
Actuated Cycle Length: 190	
Offset: 103 (54%), Referenced to phase 2:WBTL and 6:EBTL, Start of Yellow	
Natural Cycle: 120	
Control Type: Actuated-Coordinated	
Maximum v/c Ratio: 1.03	
Intersection Signal Delay: 30.4	Intersection LOS: C
Intersection Capacity Utilization 88.1%	ICU Level of Service E
Analysis Period (min) 15	

Splits and Phases: 4: SW 70th Ave & SW 8th St

Lane Group	EBL	EBT	EBR	WBL	WBT	WBR	NBL	NBT	NBR	SBL	SBT	SBR
Lane Configurations												
Traffic Volume (vph)	55	1737	19	9	1699	28	11	8	32	6	10	118
Future Volume (vph)	55	1737	19	9	1699	28	11	8	32	6	10	118
Ideal Flow (vphpl)	1900	1900	1900	1900	1900	1900	1900	1900	1900	1900	1900	1900
Storage Length (ft)	0		0	50		0	0		0	150		0
Storage Lanes	1		0	1		0	0		0	1		0
Taper Length (ft)	25			25			25			25		
Lane Util. Factor	1.00	0.95	0.95	1.00	0.95	0.95	1.00	1.00	1.00	1.00	1.00	1.00
Ped Bike Factor												
Frt		0.998			0.998			0.915			0.861	
Flt Protected	0.950			0.950				0.990		0.950		
Satd. Flow (prot)	1770	3532	0	1770	3532	0	0	1655	0	1736	1573	0
Flt Permitted	0.950			0.950				0.990		0.950		
Satd. Flow (perm)	1770	3532	0	1770	3532	0	0	1655	0	1736	1573	0
Link Speed (mph)		30			30			30			30	
Link Distance (ft)		172			4245			1304			1367	
Travel Time (s)		3.9			96.5			29.6			31.1	
Confl. Peds. (#/hr)	3		5	5		3	3		2	2		3
Peak Hour Factor	0.89	0.89	0.89	0.89	0.89	0.89	0.89	0.89	0.89	0.89	0.89	0.89
Heavy Vehicles (%)	2%	2%	2%	2%	2%	2%	4%	4%	4%	4%	4%	4%
Adj. Flow (vph)	62	1952	21	10	1909	31	12	9	36	7	11	133
Shared Lane Traffic (%)												
Lane Group Flow (vph)	62	1973	0	10	1940	0	0	57	0	7	144	0
Enter Blocked Intersection	No	No	No	No	No	No	No	No	No	No	No	No
Lane Alignment	Left	Left	Right	Left	Left	Right	Left	Left	Right	Left	Left	Right
Median Width(ft)		12			12			12			12	
Link Offset(ft)		0			0			0			0	
Crosswalk Width(ft)		16			16			16			16	
Two way Left Turn Lane												
Headway Factor	1.00	1.00	1.00	1.00	1.00	1.00	1.00	1.00	1.00	1.00	1.00	1.00
Turning Speed (mph)	15		9	15		9	15		9	15		9
Sign Control		Free			Free			Stop			Stop	

Intersection Summary	
Area Type:	Other
Control Type: Unsignalized	
Intersection Capacity Utilization 68.3%	ICU Level of Service C
Analysis Period (min) 15	

Lane Group	EBL	EBT	EBR	WBL	WBT	WBR	NBL	NBT	NBR	SBL	SBT	SBR
Lane Configurations												
Traffic Volume (vph)	11	99	11	9	337	11	17	18	4	4	44	50
Future Volume (vph)	11	99	11	9	337	11	17	18	4	4	44	50
Ideal Flow (vphpl)	1900	1900	1900	1900	1900	1900	1900	1900	1900	1900	1900	1900
Lane Util. Factor	1.00	1.00	1.00	1.00	1.00	1.00	1.00	1.00	1.00	1.00	1.00	1.00
Ped Bike Factor												
Frt		0.987			0.996			0.987			0.931	
Flt Protected		0.995			0.999			0.979			0.998	
Satd. Flow (prot)	0	1812	0	0	1853	0	0	1800	0	0	1650	0
Flt Permitted		0.995			0.999			0.979			0.998	
Satd. Flow (perm)	0	1812	0	0	1853	0	0	1800	0	0	1650	0
Link Speed (mph)		30			30			30			30	
Link Distance (ft)		1218			191			1295			1301	
Travel Time (s)		27.7			4.3			29.4			29.6	
Confl. Peds. (#/hr)	5		6	6		5						
Peak Hour Factor	0.94	0.94	0.94	0.94	0.94	0.94	0.94	0.94	0.94	0.94	0.94	0.94
Heavy Vehicles (%)	3%	3%	3%	2%	2%	2%	2%	2%	2%	7%	7%	7%
Adj. Flow (vph)	12	105	12	10	359	12	18	19	4	4	47	53
Shared Lane Traffic (%)												
Lane Group Flow (vph)	0	129	0	0	381	0	0	41	0	0	104	0
Enter Blocked Intersection	No	No	No	No	No	No	No	No	No	No	No	No
Lane Alignment	Left	Left	Right	Left	Left	Right	Left	Left	Right	Left	Left	Right
Median Width(ft)		0			0			0			0	
Link Offset(ft)		0			0			0			0	
Crosswalk Width(ft)		16			16			16			16	
Two way Left Turn Lane												
Headway Factor	1.00	1.00	1.00	1.00	1.00	1.00	1.00	1.00	1.00	1.00	1.00	1.00
Turning Speed (mph)	15		9	15		9	15		9	15		9
Sign Control		Stop			Stop			Stop			Stop	

Intersection Summary	
Area Type:	Other
Control Type: Unsignalized	
Intersection Capacity Utilization 35.9%	ICU Level of Service A
Analysis Period (min) 15	

Lane Group	EBL	EBT	EBR	WBL	WBT	WBR	NBL	NBT	NBR	SBL	SBT	SBR
Lane Configurations												
Traffic Volume (vph)	9	86	15	39	318	47	18	65	18	18	72	20
Future Volume (vph)	9	86	15	39	318	47	18	65	18	18	72	20
Ideal Flow (vphpl)	1900	1900	1900	1900	1900	1900	1900	1900	1900	1900	1900	1900
Lane Util. Factor	1.00	1.00	1.00	1.00	1.00	1.00	1.00	1.00	1.00	1.00	1.00	1.00
Ped Bike Factor												
Frt		0.982			0.984			0.976			0.976	
Flt Protected		0.996			0.995			0.991			0.992	
Satd. Flow (prot)	0	1840	0	0	1824	0	0	1784	0	0	1803	0
Flt Permitted		0.996			0.995			0.991			0.992	
Satd. Flow (perm)	0	1840	0	0	1824	0	0	1784	0	0	1803	0
Link Speed (mph)		30			30			30			30	
Link Distance (ft)		194			1122			681			1304	
Travel Time (s)		4.4			25.5			15.5			29.6	
Confl. Peds. (#/hr)	2		2	2		2			2	2		
Peak Hour Factor	0.94	0.94	0.94	0.94	0.94	0.94	0.94	0.94	0.94	0.94	0.94	0.94
Heavy Vehicles (%)	1%	1%	1%	2%	2%	2%	3%	3%	3%	2%	2%	2%
Adj. Flow (vph)	10	91	16	41	338	50	19	69	19	19	77	21
Shared Lane Traffic (%)												
Lane Group Flow (vph)	0	117	0	0	429	0	0	107	0	0	117	0
Enter Blocked Intersection	No	No	No	No	No	No	No	No	No	No	No	No
Lane Alignment	Left	Left	Right	Left	Left	Right	Left	Left	Right	Left	Left	Right
Median Width(ft)		0			0			0			0	
Link Offset(ft)		0			0			0			0	
Crosswalk Width(ft)		16			16			16			16	
Two way Left Turn Lane												
Headway Factor	1.00	1.00	1.00	1.00	1.00	1.00	1.00	1.00	1.00	1.00	1.00	1.00
Turning Speed (mph)	15		9	15		9	15		9	15		9
Sign Control		Free			Free			Stop			Stop	

Intersection Summary	
Area Type:	Other
Control Type: Unsignalized	
Intersection Capacity Utilization 43.1%	ICU Level of Service A
Analysis Period (min) 15	

Lane Group	EBL	EBT	EBR	WBL	WBT	WBR	NBL	NBT	NBR	SBL	SBT	SBR
Lane Configurations												
Traffic Volume (vph)	1	170	15	130	573	33	18	44	81	23	58	17
Future Volume (vph)	1	170	15	130	573	33	18	44	81	23	58	17
Ideal Flow (vphpl)	1900	1900	1900	1900	1900	1900	1900	1900	1900	1900	1900	1900
Lane Util. Factor	1.00	1.00	1.00	1.00	1.00	1.00	1.00	1.00	1.00	1.00	1.00	1.00
Ped Bike Factor		1.00			1.00			1.00			1.00	
Frt		0.989			0.994			0.923			0.976	
Flt Protected					0.991			0.994			0.988	
Satd. Flow (prot)	0	1857	0	0	1853	0	0	1709	0	0	1789	0
Flt Permitted		0.998			0.900			0.937			0.915	
Satd. Flow (perm)	0	1853	0	0	1682	0	0	1610	0	0	1657	0
Right Turn on Red			Yes			Yes			Yes			Yes
Satd. Flow (RTOR)		10			5			85			18	
Link Speed (mph)		30			30			30			30	
Link Distance (ft)		3560			156			188			1295	
Travel Time (s)		80.9			3.5			4.3			29.4	
Confl. Peds. (#/hr)			2	2			1					1
Peak Hour Factor	0.95	0.95	0.95	0.95	0.95	0.95	0.95	0.95	0.95	0.95	0.95	0.95
Heavy Vehicles (%)	1%	1%	1%	1%	1%	1%	2%	2%	2%	2%	2%	2%
Adj. Flow (vph)	1	179	16	137	603	35	19	46	85	24	61	18
Shared Lane Traffic (%)												
Lane Group Flow (vph)	0	196	0	0	775	0	0	150	0	0	103	0
Enter Blocked Intersection	No	No	No	No	No	No	No	No	No	No	No	No
Lane Alignment	Left	Left	Right	Left	Left	Right	Left	Left	Right	Left	Left	Right
Median Width(ft)		0			0			0			0	
Link Offset(ft)		0			0			0			0	
Crosswalk Width(ft)		16			16			16			16	
Two way Left Turn Lane												
Headway Factor	1.00	1.00	1.00	1.00	1.00	1.00	1.00	1.00	1.00	1.00	1.00	1.00
Turning Speed (mph)	15		9	15		9	15		9	15		9
Number of Detectors	1	2		1	2		1	2		1	2	
Detector Template	Left	Thru		Left	Thru		Left	Thru		Left	Thru	
Leading Detector (ft)	20	100		20	100		20	100		20	100	
Trailing Detector (ft)	0	0		0	0		0	0		0	0	
Detector 1 Position(ft)	0	0		0	0		0	0		0	0	
Detector 1 Size(ft)	20	6		20	6		20	6		20	6	
Detector 1 Type	Cl+Ex	Cl+Ex		Cl+Ex	Cl+Ex		Cl+Ex	Cl+Ex		Cl+Ex	Cl+Ex	
Detector 1 Channel												
Detector 1 Extend (s)	0.0	0.0		0.0	0.0		0.0	0.0		0.0	0.0	
Detector 1 Queue (s)	0.0	0.0		0.0	0.0		0.0	0.0		0.0	0.0	
Detector 1 Delay (s)	0.0	0.0		0.0	0.0		0.0	0.0		0.0	0.0	
Detector 2 Position(ft)		94			94			94			94	
Detector 2 Size(ft)		6			6			6			6	
Detector 2 Type		Cl+Ex			Cl+Ex			Cl+Ex			Cl+Ex	
Detector 2 Channel												
Detector 2 Extend (s)		0.0			0.0			0.0			0.0	
Turn Type	Perm	NA		Perm	NA		Perm	NA		Perm	NA	
Protected Phases		2			6			4			8	
Permitted Phases	2			6			4			8		

Lane Group	EBL	EBT	EBR	WBL	WBT	WBR	NBL	NBT	NBR	SBL	SBT	SBR
Detector Phase	2	2		6	6		4	4		8	8	
Switch Phase												
Minimum Initial (s)	12.0	12.0		12.0	12.0		7.0	7.0		7.0	7.0	
Minimum Split (s)	18.0	18.0		18.0	18.0		17.0	17.0		13.0	13.0	
Total Split (s)	36.0	36.0		36.0	36.0		26.0	26.0		26.0	26.0	
Total Split (%)	58.1%	58.1%		58.1%	58.1%		41.9%	41.9%		41.9%	41.9%	
Maximum Green (s)	30.0	30.0		30.0	30.0		20.0	20.0		20.0	20.0	
Yellow Time (s)	4.0	4.0		4.0	4.0		4.0	4.0		4.0	4.0	
All-Red Time (s)	2.0	2.0		2.0	2.0		2.0	2.0		2.0	2.0	
Lost Time Adjust (s)		0.0			0.0			0.0			0.0	
Total Lost Time (s)		6.0			6.0			6.0			6.0	
Lead/Lag												
Lead-Lag Optimize?												
Vehicle Extension (s)	1.0	1.0		1.0	1.0		2.5	2.5		2.5	2.5	
Recall Mode	Max	Max		None	None		None	None		None	None	
Walk Time (s)							1.0	1.0				
Flash Dont Walk (s)							10.0	10.0				
Pedestrian Calls (#/hr)							0	0				
Act Effct Green (s)		34.2			34.2			8.2			8.2	
Actuated g/C Ratio		0.68			0.68			0.16			0.16	
v/c Ratio		0.16			0.68			0.45			0.37	
Control Delay		4.9			12.3			14.3			19.8	
Queue Delay		0.0			0.0			0.0			0.0	
Total Delay		4.9			12.3			14.3			19.8	
LOS		A			B			B			B	
Approach Delay		4.9			12.3			14.3			19.8	
Approach LOS		A			B			B			B	

Intersection Summary	
Area Type:	Other
Cycle Length: 62	
Actuated Cycle Length: 50.6	
Natural Cycle: 60	
Control Type: Actuated-Uncoordinated	
Maximum v/c Ratio: 0.68	
Intersection Signal Delay: 12.0	Intersection LOS: B
Intersection Capacity Utilization 73.9%	ICU Level of Service D
Analysis Period (min) 15	

Splits and Phases: 8: SW 16th St & SW 70th Ave

Lane Group	EBL	EBT	EBR	WBL	WBT	WBR	NBL	NBT	NBR	SBL	SBT	SBR
Lane Configurations												
Traffic Volume (vph)	20	1723	15	15	1604	29	17	4	8	17	0	11
Future Volume (vph)	20	1723	15	15	1604	29	17	4	8	17	0	11
Ideal Flow (vphpl)	1900	1900	1900	1900	1900	1900	1900	1900	1900	1900	1900	1900
Storage Length (ft)	0		0	0		65	0		0	0		0
Storage Lanes	1		0	0		1	0		0	0		0
Taper Length (ft)	25			25			25			25		
Lane Util. Factor	1.00	0.95	0.95	0.91	0.91	1.00	1.00	1.00	1.00	1.00	1.00	1.00
Ped Bike Factor	1.00	1.00				0.96		1.00			1.00	
Frt		0.999				0.850		0.961			0.946	
Flt Protected	0.950							0.972			0.971	
Satd. Flow (prot)	1770	3535	0	0	5085	1583	0	1698	0	0	1711	0
Flt Permitted	0.950				0.871			0.865			0.808	
Satd. Flow (perm)	1767	3535	0	0	4429	1525	0	1511	0	0	1421	0
Right Turn on Red			Yes			Yes			Yes			Yes
Satd. Flow (RTOR)		1				93		9			169	
Link Speed (mph)		30			30			30			30	
Link Distance (ft)		190			193			454			534	
Travel Time (s)		4.3			4.4			10.3			12.1	
Confl. Peds. (#/hr)	3		2	2		3			1	1		
Peak Hour Factor	0.94	0.94	0.94	0.94	0.94	0.94	0.94	0.94	0.94	0.94	0.94	0.94
Heavy Vehicles (%)	2%	2%	2%	2%	2%	2%	4%	4%	4%	2%	2%	2%
Adj. Flow (vph)	21	1833	16	16	1706	31	18	4	9	18	0	12
Shared Lane Traffic (%)												
Lane Group Flow (vph)	21	1849	0	0	1722	31	0	31	0	0	30	0
Enter Blocked Intersection	No	No	No	No	No	No	No	No	No	No	No	No
Lane Alignment	Left	Left	Right	Left	Left	Right	Left	Left	Right	Left	Left	Right
Median Width(ft)		12			12			0			0	
Link Offset(ft)		0			0			0			0	
Crosswalk Width(ft)		16			16			16			16	
Two way Left Turn Lane												
Headway Factor	1.00	1.00	1.00	1.00	1.00	1.00	1.00	1.00	1.00	1.00	1.00	1.00
Turning Speed (mph)	15		9	15		9	15		9	15		9
Number of Detectors	1	2		1	2	1	1	2		1	2	
Detector Template	Left	Thru		Left	Thru	Right	Left	Thru		Left	Thru	
Leading Detector (ft)	20	100		20	100	20	20	100		20	100	
Trailing Detector (ft)	0	0		0	0	0	0	0		0	0	
Detector 1 Position(ft)	0	0		0	0	0	0	0		0	0	
Detector 1 Size(ft)	20	6		20	6	20	20	6		20	6	
Detector 1 Type	Cl+Ex	Cl+Ex		Cl+Ex	Cl+Ex	Cl+Ex	Cl+Ex	Cl+Ex		Cl+Ex	Cl+Ex	
Detector 1 Channel												
Detector 1 Extend (s)	0.0	0.0		0.0	0.0	0.0	0.0	0.0		0.0	0.0	
Detector 1 Queue (s)	0.0	0.0		0.0	0.0	0.0	0.0	0.0		0.0	0.0	
Detector 1 Delay (s)	0.0	0.0		0.0	0.0	0.0	0.0	0.0		0.0	0.0	
Detector 2 Position(ft)		94			94			94			94	
Detector 2 Size(ft)		6			6			6			6	
Detector 2 Type		Cl+Ex			Cl+Ex			Cl+Ex			Cl+Ex	
Detector 2 Channel												
Detector 2 Extend (s)		0.0			0.0			0.0			0.0	

Lane Group	Ø1	Ø2	Ø4	Ø5	Ø6	Ø8	Ø9	Ø13
Lane Configurations								
Traffic Volume (vph)								
Future Volume (vph)								
Ideal Flow (vphpl)								
Storage Length (ft)								
Storage Lanes								
Taper Length (ft)								
Lane Util. Factor								
Ped Bike Factor								
Frt								
Flt Protected								
Satd. Flow (prot)								
Flt Permitted								
Satd. Flow (perm)								
Right Turn on Red								
Satd. Flow (RTOR)								
Link Speed (mph)								
Link Distance (ft)								
Travel Time (s)								
Confl. Peds. (#/hr)								
Peak Hour Factor								
Heavy Vehicles (%)								
Adj. Flow (vph)								
Shared Lane Traffic (%)								
Lane Group Flow (vph)								
Enter Blocked Intersection								
Lane Alignment								
Median Width(ft)								
Link Offset(ft)								
Crosswalk Width(ft)								
Two way Left Turn Lane								
Headway Factor								
Turning Speed (mph)								
Number of Detectors								
Detector Template								
Leading Detector (ft)								
Trailing Detector (ft)								
Detector 1 Position(ft)								
Detector 1 Size(ft)								
Detector 1 Type								
Detector 1 Channel								
Detector 1 Extend (s)								
Detector 1 Queue (s)								
Detector 1 Delay (s)								
Detector 2 Position(ft)								
Detector 2 Size(ft)								
Detector 2 Type								
Detector 2 Channel								
Detector 2 Extend (s)								

Lane Group	EBL	EBT	EBR	WBL	WBT	WBR	NBL	NBT	NBR	SBL	SBT	SBR
Turn Type	Prot	NA		Prot	NA	Perm	Perm	NA		Perm	NA	
Protected Phases	1 13	6 13		5 8!	2 8!			3!			7	
Permitted Phases						2 8	3!			7		
Detector Phase	1 13	6 13		5 8	2 8	2 8	3	3		7	7	
Switch Phase												
Minimum Initial (s)							7.0	7.0		5.0	5.0	
Minimum Split (s)							13.0	13.0		10.7	10.7	
Total Split (s)							17.0	17.0		20.0	20.0	
Total Split (%)							9.4%	9.4%		11.1%	11.1%	
Maximum Green (s)							11.0	11.0		14.3	14.3	
Yellow Time (s)							4.0	4.0		3.7	3.7	
All-Red Time (s)							2.0	2.0		2.0	2.0	
Lost Time Adjust (s)								0.0			0.0	
Total Lost Time (s)								6.0			5.7	
Lead/Lag							Lead	Lead		Lead	Lead	
Lead-Lag Optimize?							Yes	Yes		Yes	Yes	
Vehicle Extension (s)							2.5	2.5		2.0	2.0	
Recall Mode							Max	Max		Max	Max	
Walk Time (s)												
Flash Dont Walk (s)												
Pedestrian Calls (#/hr)												
Act Effct Green (s)	33.8	93.6			113.8	113.8		44.0			14.3	
Actuated g/C Ratio	0.19	0.52			0.63	0.63		0.24			0.08	
v/c Ratio	0.06	1.01			0.72	0.03		0.08			0.11	
Control Delay	62.4	64.7			20.2	0.1		41.0			0.9	
Queue Delay	0.0	37.0			0.0	0.0		0.0			0.0	
Total Delay	62.4	101.7			20.2	0.1		41.0			0.9	
LOS	E	F			C	A		D			A	
Approach Delay		101.3			19.9			41.0			0.9	
Approach LOS		F			B			D			A	

Intersection Summary

Area Type: Other
Cycle Length: 180
Actuated Cycle Length: 180
Offset: 160 (89%), Referenced to phase 2:WBT and 6:EBT, Start of Yellow
Natural Cycle: 110
Control Type: Actuated-Coordinated
Maximum v/c Ratio: 1.01
Intersection Signal Delay: 61.2 Intersection LOS: E
Intersection Capacity Utilization 82.9% ICU Level of Service E
Analysis Period (min) 15
! Phase conflict between lane groups.

Splits and Phases: 9: Driveway/SW 70th Ct & SW 24th St

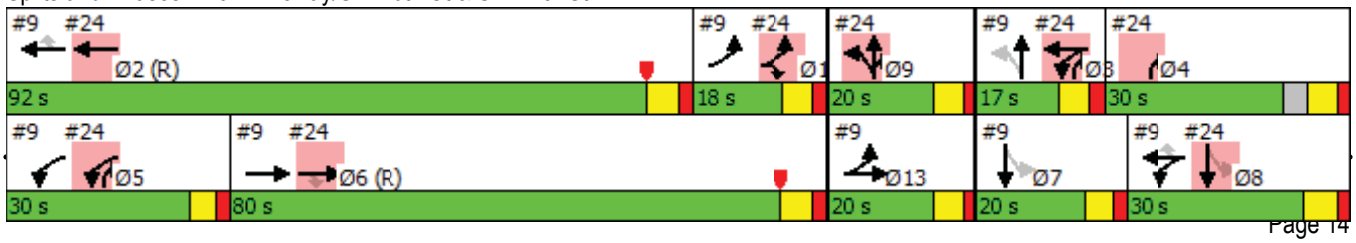

Lane Group	Ø1	Ø2	Ø4	Ø5	Ø6	Ø8	Ø9	Ø13
Turn Type								
Protected Phases	1	2	4	5	6	8	9	13
Permitted Phases								
Detector Phase								
Switch Phase								
Minimum Initial (s)	5.0	7.0	5.0	5.0	7.0	7.0	7.0	7.0
Minimum Split (s)	11.0	22.4	24.0	10.7	27.4	27.4	13.0	13.0
Total Split (s)	18.0	92.0	30.0	30.0	80.0	30.0	20.0	20.0
Total Split (%)	10%	51%	17%	17%	44%	17%	11%	11%
Maximum Green (s)	12.0	85.6	24.0	24.3	73.6	23.6	14.0	14.0
Yellow Time (s)	4.0	4.4	4.0	3.7	4.4	4.4	4.0	4.0
All-Red Time (s)	2.0	2.0	2.0	2.0	2.0	2.0	2.0	2.0
Lost Time Adjust (s)								
Total Lost Time (s)								
Lead/Lag	Lag	Lead	Lag	Lead	Lag	Lag		
Lead-Lag Optimize?	Yes	Yes	Yes	Yes	Yes	Yes		
Vehicle Extension (s)	3.0	1.0	3.0	3.0	1.0	1.0	1.0	1.0
Recall Mode	Max	C-Min	None	Max	C-Max	None	None	None
Walk Time (s)		7.0	7.0		7.0	7.0		
Flash Dont Walk (s)		9.0	11.0		14.0	14.0		
Pedestrian Calls (#/hr)		0	0		0	0		
Act Effct Green (s)								
Actuated g/C Ratio								
v/c Ratio								
Control Delay								
Queue Delay								
Total Delay								
LOS								
Approach Delay								
Approach LOS								

Intersection Summary

Lane Group	EBL	EBT	EBR	WBL	WBT	WBR	NBL	NBT	NBR	SBL	SBT	SBR
Lane Configurations												
Traffic Volume (vph)	69	1662	69	15	1388	104	55	10	24	10	8	32
Future Volume (vph)	69	1662	69	15	1388	104	55	10	24	10	8	32
Ideal Flow (vphpl)	1900	1900	1900	1900	1900	1900	1900	1900	1900	1900	1900	1900
Storage Length (ft)	0		80	0		100	0		0	0		0
Storage Lanes	0		1	0		1	0		0	0		0
Taper Length (ft)	25			25			25			25		
Lane Util. Factor	0.95	0.95	1.00	0.95	0.95	1.00	1.00	1.00	1.00	1.00	1.00	1.00
Ped Bike Factor												
Frt			0.850			0.850		0.963			0.913	
Flt Protected		0.998			0.999			0.970			0.990	
Satd. Flow (prot)	0	3532	1583	0	3536	1583	0	1757	0	0	1700	0
Flt Permitted		0.998			0.999			0.970			0.990	
Satd. Flow (perm)	0	3532	1583	0	3536	1583	0	1757	0	0	1700	0
Link Speed (mph)		30			30			30			30	
Link Distance (ft)		243			5738			2923			238	
Travel Time (s)		5.5			130.4			66.4			5.4	
Confl. Peds. (#/hr)	1		4	4		1			1	1		
Peak Hour Factor	0.96	0.96	0.96	0.96	0.96	0.96	0.96	0.96	0.96	0.96	0.96	0.96
Heavy Vehicles (%)	2%	2%	2%	2%	2%	2%	1%	1%	1%	1%	1%	1%
Adj. Flow (vph)	72	1731	72	16	1446	108	57	10	25	10	8	33
Shared Lane Traffic (%)												
Lane Group Flow (vph)	0	1803	72	0	1462	108	0	92	0	0	51	0
Enter Blocked Intersection	No	No	No	No	No	No	No	No	No	No	No	No
Lane Alignment	Left	Left	Right	Left	Left	Right	Left	Left	Right	Left	Left	Right
Median Width(ft)		0			0			0			0	
Link Offset(ft)		0			0			0			0	
Crosswalk Width(ft)		16			16			16			16	
Two way Left Turn Lane												
Headway Factor	1.00	1.00	1.00	1.00	1.00	1.00	1.00	1.00	1.00	1.00	1.00	1.00
Turning Speed (mph)	15		9	15		9	15		9	15		9
Sign Control		Free			Free			Stop			Stop	

Intersection Summary	
Area Type:	Other
Control Type: Unsignalized	
Intersection Capacity Utilization 108.5%	ICU Level of Service G
Analysis Period (min) 15	

Lane Group	EBL	EBT	EBR	WBL	WBT	WBR	NBL	NBT	NBR	SBL	SBT	SBR
Lane Configurations												
Traffic Volume (vph)	5	2422	15	23	2177	5	0	0	0	1	0	0
Future Volume (vph)	5	2422	15	23	2177	5	0	0	0	1	0	0
Ideal Flow (vphpl)	1900	1900	1900	1900	1900	1900	1900	1900	1900	1900	1900	1900
Storage Length (ft)	50		0	50		0	0		0	0		90
Storage Lanes	1		0	0		0	0		0	1		1
Taper Length (ft)	25			25			25			25		
Lane Util. Factor	1.00	0.91	0.91	0.91	0.91	0.91	1.00	1.00	1.00	1.00	1.00	1.00
Ped Bike Factor												
Frt		0.999										
Flt Protected	0.950				0.999					0.950		
Satd. Flow (prot)	1770	5080	0	0	5080	0	0	1863	0	1433	0	1508
Flt Permitted	0.950				0.999					0.950		
Satd. Flow (perm)	1770	5080	0	0	5080	0	0	1863	0	1433	0	1508
Link Speed (mph)		30			30			30			30	
Link Distance (ft)		1738			387			230			477	
Travel Time (s)		39.5			8.8			5.2			10.8	
Confl. Peds. (#/hr)	1		4	4		1			1	1		
Peak Hour Factor	0.90	0.90	0.90	0.90	0.90	0.90	0.90	0.90	0.90	0.90	0.90	0.90
Heavy Vehicles (%)	2%	2%	2%	2%	2%	2%	2%	2%	2%	26%	2%	26%
Adj. Flow (vph)	6	2691	17	26	2419	6	0	0	0	1	0	0
Shared Lane Traffic (%)												
Lane Group Flow (vph)	6	2708	0	0	2451	0	0	0	0	1	0	0
Enter Blocked Intersection	No	No	No	No	No	No	No	No	No	No	No	No
Lane Alignment	Left	Left	Right	Left	Left	Right	Left	Left	Right	Left	Left	Right
Median Width(ft)		12			12			12			12	
Link Offset(ft)		0			0			0			0	
Crosswalk Width(ft)		16			16			16			16	
Two way Left Turn Lane												
Headway Factor	1.00	1.00	1.00	1.00	1.00	1.00	1.00	1.00	1.00	1.00	1.00	1.00
Turning Speed (mph)	15		9	15		9	15		9	15		9
Sign Control		Free			Free			Stop			Stop	

Intersection Summary	
Area Type:	Other
Control Type: Unsignalized	
Intersection Capacity Utilization 68.5%	ICU Level of Service C
Analysis Period (min) 15	

Lane Group	EBL	EBT	EBR	WBL	WBT	WBR	NBL	NBT	NBR	SBL	SBT	SBR
Lane Configurations												
Traffic Volume (vph)	61	1834	243	28	2317	5	0	0	78	0	0	121
Future Volume (vph)	61	1834	243	28	2317	5	0	0	78	0	0	121
Ideal Flow (vphpl)	1900	1900	1900	1900	1900	1900	1900	1900	1900	1900	1900	1900
Storage Length (ft)	0		0	120		0	0		0	0		0
Storage Lanes	1		0	1		0	0		1	0		1
Taper Length (ft)	25			25			25			25		
Lane Util. Factor	1.00	0.91	0.91	1.00	0.91	0.91	1.00	1.00	1.00	1.00	1.00	1.00
Ped Bike Factor												
Frt		0.982							0.865			0.865
Flt Protected	0.950			0.950								
Satd. Flow (prot)	1770	4994	0	1770	5085	0	0	0	1611	0	0	1611
Flt Permitted	0.950			0.950								
Satd. Flow (perm)	1770	4994	0	1770	5085	0	0	0	1611	0	0	1611
Link Speed (mph)		30			30			30			30	
Link Distance (ft)		134			4054			653			1966	
Travel Time (s)		3.0			92.1			14.8			44.7	
Confl. Peds. (#/hr)			1	1			7					7
Peak Hour Factor	0.93	0.93	0.93	0.93	0.93	0.93	0.93	0.93	0.93	0.93	0.93	0.93
Adj. Flow (vph)	66	1972	261	30	2491	5	0	0	84	0	0	130
Shared Lane Traffic (%)												
Lane Group Flow (vph)	66	2233	0	30	2496	0	0	0	84	0	0	130
Enter Blocked Intersection	No	No	No	No	No	No	No	No	No	No	No	No
Lane Alignment	Left	Left	Right	Left	Left	Right	Left	Left	Right	Left	Left	Right
Median Width(ft)		12			12			0			0	
Link Offset(ft)		0			0			0			0	
Crosswalk Width(ft)		16			16			16			16	
Two way Left Turn Lane												
Headway Factor	1.00	1.00	1.00	1.00	1.00	1.00	1.00	1.00	1.00	1.00	1.00	1.00
Turning Speed (mph)	15		9	15		9	15		9	15		9
Sign Control		Free			Free			Stop			Stop	

Intersection Summary	
Area Type:	Other
Control Type: Unsignalized	
Intersection Capacity Utilization 60.8%	ICU Level of Service B
Analysis Period (min) 15	

Lane Group	EBT	EBR	WBL	WBT	NBL	NBR
Lane Configurations						
Traffic Volume (vph)	1049	29	20	1862	18	20
Future Volume (vph)	1049	29	20	1862	18	20
Ideal Flow (vphpl)	1900	1900	1900	1900	1900	1900
Storage Length (ft)		0	80		0	0
Storage Lanes		0	1		1	0
Taper Length (ft)			25		25	
Lane Util. Factor	0.95	0.95	1.00	0.95	1.00	1.00
Ped Bike Factor						
Frt	0.996				0.929	
Flt Protected			0.950		0.977	
Satd. Flow (prot)	3525	0	1770	3539	1707	0
Flt Permitted			0.950		0.977	
Satd. Flow (perm)	3525	0	1770	3539	1707	0
Link Speed (mph)	30			30	30	
Link Distance (ft)	2216			231	1151	
Travel Time (s)	50.4			5.3	26.2	
Confl. Peds. (#/hr)		4	4			2
Peak Hour Factor	0.97	0.97	0.97	0.97	0.97	0.97
Heavy Vehicles (%)	2%	2%	2%	2%	1%	1%
Adj. Flow (vph)	1081	30	21	1920	19	21
Shared Lane Traffic (%)						
Lane Group Flow (vph)	1111	0	21	1920	40	0
Enter Blocked Intersection	No	No	No	No	No	No
Lane Alignment	Left	Right	Left	Left	Left	Right
Median Width(ft)	12			12	12	
Link Offset(ft)	0			0	0	
Crosswalk Width(ft)	16			16	16	
Two way Left Turn Lane						
Headway Factor	1.00	1.00	1.00	1.00	1.00	1.00
Turning Speed (mph)		9	15		15	9
Sign Control	Free			Free	Stop	

Intersection Summary	
Area Type:	Other
Control Type: Unsignalized	
Intersection Capacity Utilization 62.1%	ICU Level of Service B
Analysis Period (min) 15	

Lane Group	EBT	EBR	WBL	WBT	NBL	NBR
Lane Configurations						
Traffic Volume (vph)	1059	4	28	1898	5	23
Future Volume (vph)	1059	4	28	1898	5	23
Ideal Flow (vphpl)	1900	1900	1900	1900	1900	1900
Storage Length (ft)		0	80		0	0
Storage Lanes		0	1		1	0
Taper Length (ft)			25		25	
Lane Util. Factor	0.95	0.95	1.00	0.95	1.00	1.00
Ped Bike Factor						
Frt	0.999				0.888	
Flt Protected			0.950		0.991	
Satd. Flow (prot)	3536	0	1770	3539	1623	0
Flt Permitted			0.950		0.991	
Satd. Flow (perm)	3536	0	1770	3539	1623	0
Link Speed (mph)	30			30	30	
Link Distance (ft)	228			2182	751	
Travel Time (s)	5.2			49.6	17.1	
Confl. Peds. (#/hr)		3	3			
Peak Hour Factor	0.97	0.97	0.97	0.97	0.97	0.97
Heavy Vehicles (%)	2%	2%	2%	2%	3%	3%
Adj. Flow (vph)	1092	4	29	1957	5	24
Shared Lane Traffic (%)						
Lane Group Flow (vph)	1096	0	29	1957	29	0
Enter Blocked Intersection	No	No	No	No	No	No
Lane Alignment	Left	Right	Left	Left	Left	Right
Median Width(ft)	12			12	12	
Link Offset(ft)	0			0	0	
Crosswalk Width(ft)	16			16	16	
Two way Left Turn Lane						
Headway Factor	1.00	1.00	1.00	1.00	1.00	1.00
Turning Speed (mph)		9	15		15	9
Sign Control	Free			Free	Stop	

Intersection Summary	
Area Type:	Other
Control Type: Unsignalized	
Intersection Capacity Utilization 62.5%	ICU Level of Service B
Analysis Period (min) 15	

Lane Group	EBL	EBT	WBT	WBR	SBL	SBR
Lane Configurations						
Traffic Volume (vph)	19	1076	2142	5	4	66
Future Volume (vph)	19	1076	2142	5	4	66
Ideal Flow (vphpl)	1900	1900	1900	1900	1900	1900
Storage Length (ft)	135			0	0	0
Storage Lanes	1			0	1	0
Taper Length (ft)	25				25	
Lane Util. Factor	1.00	0.95	0.95	0.95	1.00	1.00
Ped Bike Factor						
Frt					0.873	
Flt Protected	0.950				0.997	
Satd. Flow (prot)	1787	3574	3574	0	1637	0
Flt Permitted	0.950				0.997	
Satd. Flow (perm)	1787	3574	3574	0	1637	0
Link Speed (mph)		30	30		30	
Link Distance (ft)		401	7150		2598	
Travel Time (s)		9.1	162.5		59.0	
Confl. Peds. (#/hr)	1			1		
Peak Hour Factor	0.98	0.98	0.98	0.98	0.98	0.98
Heavy Vehicles (%)	1%	1%	1%	1%	1%	1%
Adj. Flow (vph)	19	1098	2186	5	4	67
Shared Lane Traffic (%)						
Lane Group Flow (vph)	19	1098	2191	0	71	0
Enter Blocked Intersection	No	No	No	No	No	No
Lane Alignment	Left	Left	Left	Right	Left	Right
Median Width(ft)		12	12		12	
Link Offset(ft)		0	0		0	
Crosswalk Width(ft)		16	16		16	
Two way Left Turn Lane						
Headway Factor	1.00	1.00	1.00	1.00	1.00	1.00
Turning Speed (mph)	15			9	15	9
Sign Control		Free	Free		Stop	

Intersection Summary	
Area Type:	Other
Control Type: Unsignalized	
Intersection Capacity Utilization 70.3%	ICU Level of Service C
Analysis Period (min) 15	

Lane Group	EBT	EBR	WBL	WBT	NBL	NBR
Lane Configurations						
Traffic Volume (vph)	286	108	316	580	338	216
Future Volume (vph)	286	108	316	580	338	216
Ideal Flow (vphpl)	1900	1900	1900	1900	1900	1900
Lane Util. Factor	1.00	1.00	1.00	1.00	0.97	1.00
Ped Bike Factor	1.00		1.00			
Frt	0.963					0.850
Flt Protected			0.950		0.950	
Satd. Flow (prot)	1787	0	1787	1881	3400	1568
Flt Permitted			0.375		0.950	
Satd. Flow (perm)	1787	0	705	1881	3400	1568
Right Turn on Red		Yes				Yes
Satd. Flow (RTOR)	30					237
Link Speed (mph)	30			30	30	
Link Distance (ft)	155			1747	395	
Travel Time (s)	3.5			39.7	9.0	
Confl. Peds. (#/hr)		3	3			3
Peak Hour Factor	0.91	0.91	0.91	0.91	0.91	0.91
Heavy Vehicles (%)	2%	2%	1%	1%	3%	3%
Adj. Flow (vph)	314	119	347	637	371	237
Shared Lane Traffic (%)						
Lane Group Flow (vph)	433	0	347	637	371	237
Enter Blocked Intersection	No	No	No	No	No	No
Lane Alignment	Left	Right	Left	Left	Left	Right
Median Width(ft)	12			12	24	
Link Offset(ft)	0			0	0	
Crosswalk Width(ft)	16			16	16	
Two way Left Turn Lane						
Headway Factor	1.00	1.00	1.00	1.00	1.00	1.00
Turning Speed (mph)		9	15		15	9
Number of Detectors	2		1	2	1	1
Detector Template	Thru		Left	Thru	Left	Right
Leading Detector (ft)	100		20	100	20	20
Trailing Detector (ft)	0		0	0	0	0
Detector 1 Position(ft)	0		0	0	0	0
Detector 1 Size(ft)	6		20	6	20	20
Detector 1 Type	Cl+Ex		Cl+Ex	Cl+Ex	Cl+Ex	Cl+Ex
Detector 1 Channel						
Detector 1 Extend (s)	0.0		0.0	0.0	0.0	0.0
Detector 1 Queue (s)	0.0		0.0	0.0	0.0	0.0
Detector 1 Delay (s)	0.0		0.0	0.0	0.0	0.0
Detector 2 Position(ft)	94			94		
Detector 2 Size(ft)	6			6		
Detector 2 Type	Cl+Ex			Cl+Ex		
Detector 2 Channel						
Detector 2 Extend (s)	0.0			0.0		
Turn Type	NA		pm+pt	NA	Perm	Over
Protected Phases	6		5	2		5
Permitted Phases			2		4	

Lane Group	EBT	EBR	WBL	WBT	NBL	NBR
Detector Phase	6		5	2	4	5
Switch Phase						
Minimum Initial (s)	15.0		5.0	15.0	7.0	5.0
Minimum Split (s)	22.5		12.2	22.5	17.0	12.2
Total Split (s)	48.0		14.0	62.0	24.0	14.0
Total Split (%)	55.8%		16.3%	72.1%	27.9%	16.3%
Maximum Green (s)	40.5		6.8	54.5	18.0	6.8
Yellow Time (s)	4.0		3.7	4.0	4.0	3.7
All-Red Time (s)	3.5		3.5	3.5	2.0	3.5
Lost Time Adjust (s)	0.0		0.0	0.0	0.0	0.0
Total Lost Time (s)	7.5		7.2	7.5	6.0	7.2
Lead/Lag	Lag		Lead			Lead
Lead-Lag Optimize?	Yes		Yes			Yes
Vehicle Extension (s)	1.0		2.0	1.0	2.5	2.0
Recall Mode	Max		None	Max	None	None
Walk Time (s)					2.0	
Flash Dont Walk (s)					9.0	
Pedestrian Calls (#/hr)					0	
Act Effct Green (s)	40.6		54.9	54.6	13.6	6.8
Actuated g/C Ratio	0.50		0.67	0.67	0.17	0.08
v/c Ratio	0.48		0.62	0.51	0.66	0.68
Control Delay	15.3		11.8	9.0	37.6	16.7
Queue Delay	0.0		0.0	0.0	0.0	0.0
Total Delay	15.3		11.8	9.0	37.6	16.7
LOS	B		B	A	D	B
Approach Delay	15.3			10.0	29.5	
Approach LOS	B			A	C	

Intersection Summary	
Area Type:	Other
Cycle Length: 86	
Actuated Cycle Length: 81.7	
Natural Cycle: 60	
Control Type: Actuated-Uncoordinated	
Maximum v/c Ratio: 0.68	
Intersection Signal Delay: 17.0	Intersection LOS: B
Intersection Capacity Utilization 66.1%	ICU Level of Service C
Analysis Period (min) 15	

Splits and Phases: 16: SW 70th Ave & SW 80th St

Lane Group	EBL	EBT	WBT	WBR	SBL	SBR
Lane Configurations						
Traffic Volume (vph)	17	264	693	10	8	51
Future Volume (vph)	17	264	693	10	8	51
Ideal Flow (vphpl)	1900	1900	1900	1900	1900	1900
Lane Util. Factor	1.00	1.00	1.00	1.00	1.00	1.00
Frt			0.998		0.883	
Flt Protected		0.997			0.993	
Satd. Flow (prot)	0	1857	1877	0	1649	0
Flt Permitted		0.997			0.993	
Satd. Flow (perm)	0	1857	1877	0	1649	0
Link Speed (mph)		30	30		30	
Link Distance (ft)		235	1246		617	
Travel Time (s)		5.3	28.3		14.0	
Peak Hour Factor	0.96	0.96	0.96	0.96	0.96	0.96
Heavy Vehicles (%)	2%	2%	1%	1%	1%	1%
Adj. Flow (vph)	18	275	722	10	8	53
Shared Lane Traffic (%)						
Lane Group Flow (vph)	0	293	732	0	61	0
Enter Blocked Intersection	No	No	No	No	No	No
Lane Alignment	Left	Left	Left	Right	Left	Right
Median Width(ft)		0	0		12	
Link Offset(ft)		0	0		0	
Crosswalk Width(ft)		16	16		16	
Two way Left Turn Lane						
Headway Factor	1.00	1.00	1.00	1.00	1.00	1.00
Turning Speed (mph)	15			9	15	9
Sign Control		Free	Free		Stop	

Intersection Summary			
Area Type:	Other		
Control Type: Unsignalized			
Intersection Capacity Utilization 47.3%		ICU Level of Service A	
Analysis Period (min) 15			

Lane Group	EBL	EBT	WBT	WBR	SBL	SBR
Lane Configurations						
Traffic Volume (vph)	11	1096	2045	6	34	48
Future Volume (vph)	11	1096	2045	6	34	48
Ideal Flow (vphpl)	1900	1900	1900	1900	1900	1900
Storage Length (ft)	60			0	0	0
Storage Lanes	1			0	1	0
Taper Length (ft)	25				25	
Lane Util. Factor	1.00	0.95	0.95	0.95	1.00	1.00
Ped Bike Factor						
Frt					0.921	
Flt Protected	0.950				0.980	
Satd. Flow (prot)	1787	3574	3574	0	1665	0
Flt Permitted	0.950				0.980	
Satd. Flow (perm)	1787	3574	3574	0	1665	0
Link Speed (mph)		30	30		30	
Link Distance (ft)		1866	224		577	
Travel Time (s)		42.4	5.1		13.1	
Confl. Peds. (#/hr)	1			1	1	
Peak Hour Factor	0.95	0.95	0.95	0.95	0.95	0.95
Heavy Vehicles (%)	1%	1%	1%	1%	3%	3%
Adj. Flow (vph)	12	1154	2153	6	36	51
Shared Lane Traffic (%)						
Lane Group Flow (vph)	12	1154	2159	0	87	0
Enter Blocked Intersection	No	No	No	No	No	No
Lane Alignment	Left	Left	Left	Right	Left	Right
Median Width(ft)		12	12		12	
Link Offset(ft)		0	0		0	
Crosswalk Width(ft)		16	16		16	
Two way Left Turn Lane						
Headway Factor	1.00	1.00	1.00	1.00	1.00	1.00
Turning Speed (mph)	15			9	15	9
Sign Control		Free	Free		Stop	

Intersection Summary	
Area Type:	Other
Control Type: Unsignalized	
Intersection Capacity Utilization 68.2%	ICU Level of Service C
Analysis Period (min) 15	

Lane Group	EBL	EBT	EBR	WBL	WBT	WBR	NBL	NBT	NBR	SBL	SBT	SBR
Lane Configurations												
Traffic Volume (vph)	9	33	0	0	135	39	0	0	0	34	0	48
Future Volume (vph)	9	33	0	0	135	39	0	0	0	34	0	48
Ideal Flow (vphpl)	1900	1900	1900	1900	1900	1900	1900	1900	1900	1900	1900	1900
Lane Util. Factor	1.00	1.00	1.00	1.00	1.00	1.00	1.00	1.00	1.00	1.00	1.00	1.00
Ped Bike Factor												
Frt					0.970						0.921	
Flt Protected		0.990									0.980	
Satd. Flow (prot)	0	1862	0	0	1825	0	0	1881	0	0	1698	0
Flt Permitted		0.990									0.980	
Satd. Flow (perm)	0	1862	0	0	1825	0	0	1881	0	0	1698	0
Link Speed (mph)		30			30			30			30	
Link Distance (ft)		265			1151			219			613	
Travel Time (s)		6.0			26.2			5.0			13.9	
Confl. Peds. (#/hr)			5	5					11	11		
Peak Hour Factor	0.88	0.88	0.88	0.88	0.88	0.88	0.88	0.88	0.88	0.88	0.88	0.88
Heavy Vehicles (%)	1%	1%	1%	1%	1%	1%	1%	1%	1%	1%	1%	1%
Adj. Flow (vph)	10	38	0	0	153	44	0	0	0	39	0	55
Shared Lane Traffic (%)												
Lane Group Flow (vph)	0	48	0	0	197	0	0	0	0	0	94	0
Enter Blocked Intersection	No	No	No	No	No	No	No	No	No	No	No	No
Lane Alignment	Left	Left	Right	Left	Left	Right	Left	Left	Right	Left	Left	Right
Median Width(ft)		0			0			0			0	
Link Offset(ft)		0			0			0			0	
Crosswalk Width(ft)		16			16			16			16	
Two way Left Turn Lane												
Headway Factor	1.00	1.00	1.00	1.00	1.00	1.00	1.00	1.00	1.00	1.00	1.00	1.00
Turning Speed (mph)	15		9	15		9	15		9	15		9
Sign Control		Stop			Stop			Stop			Stop	

Intersection Summary	
Area Type:	Other
Control Type: Unsignalized	
Intersection Capacity Utilization 23.2%	ICU Level of Service A
Analysis Period (min) 15	

Synchro LOS and Delay – Existing Condition – AM

Movement	EBL	EBT	EBR	WBL	WBT	WBR	NBL	NBT	NBR	SBL	SBT	SBR
Lane Configurations												
Traffic Volume (veh/h)	11	1616	64	19	1263	3	97	84	15	5	33	144
Future Volume (veh/h)	11	1616	64	19	1263	3	97	84	15	5	33	144
Number	1	6	16	5	2	12	7	4	14	3	8	18
Initial Q (Qb), veh	0	0	0	0	0	0	0	0	0	0	0	0
Ped-Bike Adj(A_pbT)	1.00		1.00	1.00		1.00	1.00		1.00	1.00		1.00
Parking Bus, Adj	1.00	1.00	1.00	1.00	1.00	1.00	1.00	1.00	1.00	1.00	1.00	1.00
Adj Sat Flow, veh/h/ln	1900	1863	1900	1845	1845	1900	1810	1810	1900	1863	1863	1863
Adj Flow Rate, veh/h	12	1701	67	20	1329	3	102	88	16	5	35	152
Adj No. of Lanes	0	2	0	1	2	0	1	1	0	1	1	1
Peak Hour Factor	0.95	0.95	0.95	0.95	0.95	0.95	0.95	0.95	0.95	0.95	0.95	0.95
Percent Heavy Veh, %	2	2	2	3	3	3	5	5	5	2	2	2
Cap, veh/h	27	2153	85	171	2543	6	280	331	60	262	414	351
Arrive On Green	0.64	0.64	0.64	0.03	0.71	0.71	0.22	0.22	0.22	0.22	0.22	0.22
Sat Flow, veh/h	11	3353	132	1757	3588	8	1155	1490	271	1283	1863	1579
Grp Volume(v), veh/h	931	0	849	20	649	683	102	0	104	5	35	152
Grp Sat Flow(s),veh/h/ln	1824	0	1672	1757	1752	1843	1155	0	1761	1283	1863	1579
Q Serve(g_s), s	4.0	0.0	66.5	0.6	30.8	30.8	13.8	0.0	8.8	0.6	2.7	14.9
Cycle Q Clear(g_c), s	64.7	0.0	66.5	0.6	30.8	30.8	16.5	0.0	8.8	9.4	2.7	14.9
Prop In Lane	0.01		0.08	1.00		0.00	1.00		0.15	1.00		1.00
Lane Grp Cap(c), veh/h	1192	0	1074	171	1242	1307	280	0	391	262	414	351
V/C Ratio(X)	0.78	0.00	0.79	0.12	0.52	0.52	0.36	0.00	0.27	0.02	0.08	0.43
Avail Cap(c_a), veh/h	1192	0	1074	171	1242	1307	280	0	391	262	414	351
HCM Platoon Ratio	1.00	1.00	1.00	1.00	1.00	1.00	1.00	1.00	1.00	1.00	1.00	1.00
Upstream Filter(I)	1.00	0.00	1.00	1.00	1.00	1.00	1.00	0.00	1.00	1.00	1.00	1.00
Uniform Delay (d), s/veh	23.0	0.0	23.4	23.0	12.1	12.1	62.0	0.0	57.9	61.7	55.5	60.2
Incr Delay (d2), s/veh	3.1	0.0	3.7	1.4	1.6	1.5	3.7	0.0	1.7	0.1	0.4	3.9
Initial Q Delay(d3),s/veh	0.0	0.0	0.0	0.0	0.0	0.0	0.0	0.0	0.0	0.0	0.0	0.0
%ile BackOfQ(50%),veh/ln	33.9	0.0	31.8	0.5	15.3	16.1	4.7	0.0	4.5	0.2	1.4	6.9
LnGrp Delay(d),s/veh	26.2	0.0	27.2	24.4	13.7	13.6	65.7	0.0	59.5	61.9	55.9	64.1
LnGrp LOS	C		C	C	B	B	E		E	E	E	E
Approach Vol, veh/h		1780			1352			206			192	
Approach Delay, s/veh		26.6			13.8			62.6			62.5	
Approach LOS		C			B			E			E	

Timer	1	2	3	4	5	6	7	8
Assigned Phs		2		4	5	6		8
Phs Duration (G+Y+Rc), s		134.0		46.0	12.0	122.0		46.0
Change Period (Y+Rc), s		6.4		6.0	6.0	6.4		6.0
Max Green Setting (Gmax), s		127.6		40.0	6.0	115.6		40.0
Max Q Clear Time (g_c+I1), s		32.8		18.5	2.6	68.5		16.9
Green Ext Time (p_c), s		14.4		1.3	0.0	13.6		1.3

Intersection Summary	
HCM 2010 Ctrl Delay	25.8
HCM 2010 LOS	C

Intersection	
Int Delay, s/veh	0.1

Movement	EBL	EBT	WBT	WBR	SBL	SBR
Lane Configurations						
Traffic Vol, veh/h	9	1720	1468	7	1	2
Future Vol, veh/h	9	1720	1468	7	1	2
Conflicting Peds, #/hr	10	0	0	0	0	0
Sign Control	Free	Free	Free	Free	Stop	Stop
RT Channelized	-	None	-	None	-	None
Storage Length	125	-	-	-	0	-
Veh in Median Storage, #	-	0	0	-	0	-
Grade, %	-	0	0	-	0	-
Peak Hour Factor	97	97	97	97	97	97
Heavy Vehicles, %	1	1	1	1	1	1
Mvmt Flow	9	1773	1513	7	1	2

Major/Minor	Major1		Major2		Minor2	
Conflicting Flow All	1531	0	-	0	2432	770
Stage 1	-	-	-	-	1527	-
Stage 2	-	-	-	-	905	-
Critical Hdwy	4.12	-	-	-	6.82	6.92
Critical Hdwy Stg 1	-	-	-	-	5.82	-
Critical Hdwy Stg 2	-	-	-	-	5.82	-
Follow-up Hdwy	2.21	-	-	-	3.51	3.31
Pot Cap-1 Maneuver	436	-	-	-	27	345
Stage 1	-	-	-	-	167	-
Stage 2	-	-	-	-	357	-
Platoon blocked, %		-	-	-		
Mov Cap-1 Maneuver	436	-	-	-	26	342
Mov Cap-2 Maneuver	-	-	-	-	26	-
Stage 1	-	-	-	-	165	-
Stage 2	-	-	-	-	346	-

Approach	EB	WB	SB
HCM Control Delay, s	0.1	0	60.4
HCM LOS			F

Minor Lane/Major Mvmt	EBL	EBT	WBT	WBR	SBLn1
Capacity (veh/h)	436	-	-	-	68
HCM Lane V/C Ratio	0.021	-	-	-	0.045
HCM Control Delay (s)	13.4	-	-	-	60.4
HCM Lane LOS	B	-	-	-	F
HCM 95th %tile Q(veh)	0.1	-	-	-	0.1

Intersection	
Intersection Delay, s/veh	15.9
Intersection LOS	C

Movement	EBL	EBT	EBR	WBL	WBT	WBR	NBL	NBT	NBR	SBL	SBT	SBR
Lane Configurations												
Traffic Vol, veh/h	40	380	58	5	190	9	36	97	10	16	54	33
Future Vol, veh/h	40	380	58	5	190	9	36	97	10	16	54	33
Peak Hour Factor	0.93	0.93	0.93	0.93	0.93	0.93	0.93	0.93	0.93	0.93	0.93	0.93
Heavy Vehicles, %	4	4	4	2	2	2	3	3	3	6	6	6
Mvmt Flow	43	409	62	5	204	10	39	104	11	17	58	35
Number of Lanes	0	1	0	0	1	0	0	1	0	0	1	0

Approach	EB	WB	NB	SB
Opposing Approach	WB	EB	SB	NB
Opposing Lanes	1	1	1	1
Conflicting Approach Left	SB	NB	EB	WB
Conflicting Lanes Left	1	1	1	1
Conflicting Approach Right	NB	SB	WB	EB
Conflicting Lanes Right	1	1	1	1
HCM Control Delay	20.3	11.3	11.3	10.6
HCM LOS	C	B	B	B

Lane	NBLn1	EBLn1	WBLn1	SBLn1
Vol Left, %	25%	8%	2%	16%
Vol Thru, %	68%	79%	93%	52%
Vol Right, %	7%	12%	4%	32%
Sign Control	Stop	Stop	Stop	Stop
Traffic Vol by Lane	143	478	204	103
LT Vol	36	40	5	16
Through Vol	97	380	190	54
RT Vol	10	58	9	33
Lane Flow Rate	154	514	219	111
Geometry Grp	1	1	1	1
Degree of Util (X)	0.26	0.724	0.334	0.187
Departure Headway (Hd)	6.093	5.074	5.482	6.079
Convergence, Y/N	Yes	Yes	Yes	Yes
Cap	587	709	654	588
Service Time	4.153	3.113	3.533	4.143
HCM Lane V/C Ratio	0.262	0.725	0.335	0.189
HCM Control Delay	11.3	20.3	11.3	10.6
HCM Lane LOS	B	C	B	B
HCM 95th-tile Q	1	6.3	1.5	0.7

HCM 2010 edition methodology does not support a perm + prot left-turn type from a shared lane. Left-turn bay is needed for phases 3.

Movement	EBL	EBT	EBR	WBL	WBT	WBR	NBL	NBT	NBR	SBL	SBT	SBR
Lane Configurations												
Traffic Volume (vph)	32	1755	26	30	1342	42	66	6	53	53	5	21
Future Volume (vph)	32	1755	26	30	1342	42	66	6	53	53	5	21
Ideal Flow (vphpl)	1900	1900	1900	1900	1900	1900	1900	1900	1900	1900	1900	1900
Total Lost time (s)	6.0	6.0		6.0	6.0			6.0			6.0	6.0
Lane Util. Factor	1.00	0.95		1.00	0.95			1.00			1.00	1.00
Frpb, ped/bikes	1.00	1.00		1.00	1.00			0.99			1.00	1.00
Flpb, ped/bikes	1.00	1.00		1.00	1.00			1.00			1.00	1.00
Frt	1.00	1.00		1.00	1.00			0.94			1.00	0.85
Flt Protected	0.95	1.00		0.95	1.00			0.97			0.96	1.00
Satd. Flow (prot)	1787	3565		1770	3518			1683			1764	1568
Flt Permitted	0.13	1.00		0.07	1.00			0.80			0.58	1.00
Satd. Flow (perm)	249	3565		131	3518			1387			1071	1568
Peak-hour factor, PHF	0.98	0.98	0.98	0.98	0.98	0.98	0.98	0.98	0.98	0.98	0.98	0.98
Adj. Flow (vph)	33	1791	27	31	1369	43	67	6	54	54	5	21
RTOR Reduction (vph)	0	1	0	0	1	0	0	14	0	0	0	16
Lane Group Flow (vph)	33	1817	0	31	1411	0	0	113	0	0	59	5
Confl. Peds. (#/hr)	7		2	2		7			1	1		
Heavy Vehicles (%)	1%	1%	1%	2%	2%	2%	3%	3%	3%	3%	3%	3%
Turn Type	pm+pt	NA		pm+pt	NA		Perm	NA		pm+pt	NA	pm+ov
Protected Phases	1	6		5	2			4		3	8	1
Permitted Phases	6			2			4			8		8
Actuated Green, G (s)	143.0	132.0		137.0	129.0			20.0			32.0	43.0
Effective Green, g (s)	143.0	132.0		137.0	129.0			20.0			32.0	43.0
Actuated g/C Ratio	0.75	0.69		0.72	0.68			0.11			0.17	0.23
Clearance Time (s)	6.0	6.0		6.0	6.0			6.0			6.0	6.0
Vehicle Extension (s)	3.0	1.0		3.0	1.0			2.5			2.5	3.0
Lane Grp Cap (vph)	276	2476		163	2388			146			202	404
v/s Ratio Prot	0.01	c0.51		c0.01	0.40						c0.01	0.00
v/s Ratio Perm	0.08			0.13				c0.08			0.04	0.00
v/c Ratio	0.12	0.73		0.19	0.59			0.77			0.29	0.01
Uniform Delay, d1	10.5	18.1		17.3	16.3			82.8			69.1	57.0
Progression Factor	1.00	1.00		1.00	1.00			1.00			1.00	1.00
Incremental Delay, d2	0.9	2.0		2.6	1.1			31.8			3.6	0.1
Delay (s)	11.4	20.0		19.9	17.4			114.6			72.7	57.1
Level of Service	B	C		B	B			F			E	E
Approach Delay (s)		19.9			17.5			114.6			68.6	
Approach LOS		B			B			F			E	

Intersection Summary			
HCM 2000 Control Delay	23.4	HCM 2000 Level of Service	C
HCM 2000 Volume to Capacity ratio	0.70		
Actuated Cycle Length (s)	190.0	Sum of lost time (s)	24.0
Intersection Capacity Utilization	74.3%	ICU Level of Service	D
Analysis Period (min)	15		

c Critical Lane Group

Intersection	
Int Delay, s/veh	15.3

Movement	EBL	EBT	EBR	WBL	WBT	WBR	NBL	NBT	NBR	SBL	SBT	SBR
Lane Configurations												
Traffic Vol, veh/h	77	1613	12	9	1352	21	10	5	16	12	0	82
Future Vol, veh/h	77	1613	12	9	1352	21	10	5	16	12	0	82
Conflicting Peds, #/hr	2	0	2	2	0	2	2	0	1	1	0	2
Sign Control	Free	Free	Free	Free	Free	Free	Stop	Stop	Stop	Stop	Stop	Stop
RT Channelized	-	-	None	-	-	None	-	-	None	-	-	None
Storage Length	0	-	-	50	-	-	-	-	-	150	-	-
Veh in Median Storage, #	-	0	-	-	0	-	-	0	-	-	0	-
Grade, %	-	0	-	-	0	-	-	0	-	-	0	-
Peak Hour Factor	98	98	98	98	98	98	98	98	98	98	98	98
Heavy Vehicles, %	2	2	2	2	2	2	4	4	4	4	4	4
Mvmt Flow	79	1646	12	9	1380	21	10	5	16	12	0	84

Major/Minor	Major1			Major2			Minor1			Minor2		
Conflicting Flow All	1403	0	0	1660	0	0	2521	3232	832	2395	3228	705
Stage 1	-	-	-	-	-	-	1811	1811	-	1411	1411	-
Stage 2	-	-	-	-	-	-	710	1421	-	984	1817	-
Critical Hdwy	4.14	-	-	4.14	-	-	7.58	6.58	6.98	7.58	6.58	6.98
Critical Hdwy Stg 1	-	-	-	-	-	-	6.58	5.58	-	6.58	5.58	-
Critical Hdwy Stg 2	-	-	-	-	-	-	6.58	5.58	-	6.58	5.58	-
Follow-up Hdwy	2.22	-	-	2.22	-	-	3.54	4.04	3.34	3.54	4.04	3.34
Pot Cap-1 Maneuver	483	-	-	384	-	-	14	9	308	17	9	374
Stage 1	-	-	-	-	-	-	80	126	-	143	199	-
Stage 2	-	-	-	-	-	-	386	197	-	263	125	-
Platoon blocked, %		-	-		-	-						
Mov Cap-1 Maneuver	482	-	-	384	-	-	~ 9	7	307	~ 6	7	373
Mov Cap-2 Maneuver	-	-	-	-	-	-	~ 9	7	-	~ 6	7	-
Stage 1	-	-	-	-	-	-	67	105	-	119	194	-
Stage 2	-	-	-	-	-	-	292	192	-	198	104	-

Approach	EB	WB	NB	SB
HCM Control Delay, s	0.6	0.1	$ 873.9	221.7
HCM LOS			F	F

Minor Lane/Major Mvmt	NBLn1	EBL	EBT	EBR	WBL	WBT	WBR	SBLn1	SBLn2
Capacity (veh/h)	17	482	-	-	384	-	-	6	373
HCM Lane V/C Ratio	1.861	0.163	-	-	0.024	-	-	2.041	0.224
HCM Control Delay (s)	$ 873.9	13.9	-	-	14.6	-	-	$ 1617.6	17.4
HCM Lane LOS	F	B	-	-	B	-	-	F	C
HCM 95th %tile Q(veh)	4.5	0.6	-	-	0.1	-	-	2.6	0.8

Notes

~: Volume exceeds capacity $: Delay exceeds 300s +: Computation Not Defined *: All major volume in platoon

Intersection	
Intersection Delay, s/veh	8.4
Intersection LOS	A

Movement	EBL	EBT	EBR	WBL	WBT	WBR	NBL	NBT	NBR	SBL	SBT	SBR
Lane Configurations												
Traffic Vol, veh/h	19	122	15	5	111	8	25	19	9	6	8	18
Future Vol, veh/h	19	122	15	5	111	8	25	19	9	6	8	18
Peak Hour Factor	0.84	0.84	0.84	0.84	0.84	0.84	0.84	0.84	0.84	0.84	0.84	0.84
Heavy Vehicles, %	3	3	3	2	2	2	2	2	2	7	7	7
Mvmt Flow	23	145	18	6	132	10	30	23	11	7	10	21
Number of Lanes	0	1	0	0	1	0	0	1	0	0	1	0

Approach	EB	WB	NB	SB
Opposing Approach	WB	EB	SB	NB
Opposing Lanes	1	1	1	1
Conflicting Approach Left	SB	NB	EB	WB
Conflicting Lanes Left	1	1	1	1
Conflicting Approach Right	NB	SB	WB	EB
Conflicting Lanes Right	1	1	1	1
HCM Control Delay	8.6	8.3	8.2	7.8
HCM LOS	A	A	A	A

Lane	NBLn1	EBLn1	WBLn1	SBLn1
Vol Left, %	47%	12%	4%	19%
Vol Thru, %	36%	78%	90%	25%
Vol Right, %	17%	10%	6%	56%
Sign Control	Stop	Stop	Stop	Stop
Traffic Vol by Lane	53	156	124	32
LT Vol	25	19	5	6
Through Vol	19	122	111	8
RT Vol	9	15	8	18
Lane Flow Rate	63	186	148	38
Geometry Grp	1	1	1	1
Degree of Util (X)	0.083	0.223	0.178	0.048
Departure Headway (Hd)	4.713	4.314	4.339	4.538
Convergence, Y/N	Yes	Yes	Yes	Yes
Cap	761	834	828	790
Service Time	2.735	2.331	2.357	2.563
HCM Lane V/C Ratio	0.083	0.223	0.179	0.048
HCM Control Delay	8.2	8.6	8.3	7.8
HCM Lane LOS	A	A	A	A
HCM 95th-tile Q	0.3	0.9	0.6	0.2

Intersection	
Int Delay, s/veh	4.7

Movement	EBL	EBT	EBR	WBL	WBT	WBR	NBL	NBT	NBR	SBL	SBT	SBR
Lane Configurations												
Traffic Vol, veh/h	6	122	16	20	110	29	15	75	19	7	28	7
Future Vol, veh/h	6	122	16	20	110	29	15	75	19	7	28	7
Conflicting Peds, #/hr	2	0	1	1	0	2	2	0	1	1	0	2
Sign Control	Free	Free	Free	Free	Free	Free	Stop	Stop	Stop	Stop	Stop	Stop
RT Channelized	-	-	None	-	-	None	-	-	None	-	-	None
Storage Length	-	-	-	-	-	-	-	-	-	-	-	-
Veh in Median Storage, #	-	0	-	-	0	-	-	0	-	-	0	-
Grade, %	-	0	-	-	0	-	-	0	-	-	0	-
Peak Hour Factor	86	86	86	86	86	86	86	86	86	86	86	86
Heavy Vehicles, %	1	1	1	2	2	2	3	3	3	2	2	2
Mvmt Flow	7	142	19	23	128	34	17	87	22	8	33	8

Major/Minor	Major1			Major2			Minor1			Minor2		
Conflicting Flow All	164	0	0	161	0	0	380	376	153	414	368	149
Stage 1	-	-	-	-	-	-	166	166	-	193	193	-
Stage 2	-	-	-	-	-	-	214	210	-	221	175	-
Critical Hdwy	4.11	-	-	4.12	-	-	7.13	6.53	6.23	7.12	6.52	6.22
Critical Hdwy Stg 1	-	-	-	-	-	-	6.13	5.53	-	6.12	5.52	-
Critical Hdwy Stg 2	-	-	-	-	-	-	6.13	5.53	-	6.12	5.52	-
Follow-up Hdwy	2.209	-	-	2.218	-	-	3.527	4.027	3.327	3.518	4.018	3.318
Pot Cap-1 Maneuver	1421	-	-	1418	-	-	576	554	890	549	561	898
Stage 1	-	-	-	-	-	-	834	759	-	809	741	-
Stage 2	-	-	-	-	-	-	786	727	-	781	754	-
Platoon blocked, %		-	-		-	-						
Mov Cap-1 Maneuver	1418	-	-	1417	-	-	534	540	888	460	547	895
Mov Cap-2 Maneuver	-	-	-	-	-	-	534	540	-	460	547	-
Stage 1	-	-	-	-	-	-	829	754	-	803	726	-
Stage 2	-	-	-	-	-	-	729	713	-	669	750	-

Approach	EB	WB	NB	SB
HCM Control Delay, s	0.3	1	13	12
HCM LOS			B	B

Minor Lane/Major Mvmt	NBLn1	EBL	EBT	EBR	WBL	WBT	WBR	SBLn1
Capacity (veh/h)	579	1418	-	-	1417	-	-	566
HCM Lane V/C Ratio	0.219	0.005	-	-	0.016	-	-	0.086
HCM Control Delay (s)	13	7.6	0	-	7.6	0	-	12
HCM Lane LOS	B	A	A	-	A	A	-	B
HCM 95th %tile Q(veh)	0.8	0	-	-	0.1	-	-	0.3

Movement	EBL	EBT	EBR	WBL	WBT	WBR	NBL	NBT	NBR	SBL	SBT	SBR
Lane Configurations												
Traffic Volume (veh/h)	11	334	8	56	228	23	11	59	136	21	30	6
Future Volume (veh/h)	11	334	8	56	228	23	11	59	136	21	30	6
Number	5	2	12	1	6	16	7	4	14	3	8	18
Initial Q (Qb), veh	0	0	0	0	0	0	0	0	0	0	0	0
Ped-Bike Adj(A_pbT)	1.00		1.00	1.00		1.00	1.00		1.00	1.00		1.00
Parking Bus, Adj	1.00	1.00	1.00	1.00	1.00	1.00	1.00	1.00	1.00	1.00	1.00	1.00
Adj Sat Flow, veh/h/ln	1900	1881	1900	1900	1881	1900	1900	1863	1900	1900	1863	1900
Adj Flow Rate, veh/h	11	348	8	58	238	24	11	61	142	22	31	6
Adj No. of Lanes	0	1	0	0	1	0	0	1	0	0	1	0
Peak Hour Factor	0.96	0.96	0.96	0.96	0.96	0.96	0.96	0.96	0.96	0.96	0.96	0.96
Percent Heavy Veh, %	1	1	1	1	1	1	2	2	2	2	2	2
Cap, veh/h	76	1112	25	210	820	77	73	90	190	162	193	30
Arrive On Green	0.62	0.62	0.62	0.62	0.62	0.62	0.17	0.17	0.17	0.17	0.17	0.17
Sat Flow, veh/h	17	1805	41	220	1332	126	38	519	1098	433	1117	175
Grp Volume(v), veh/h	367	0	0	320	0	0	214	0	0	59	0	0
Grp Sat Flow(s),veh/h/ln	1863	0	0	1677	0	0	1655	0	0	1725	0	0
Q Serve(g_s), s	0.0	0.0	0.0	0.0	0.0	0.0	1.6	0.0	0.0	0.0	0.0	0.0
Cycle Q Clear(g_c), s	5.3	0.0	0.0	4.5	0.0	0.0	6.9	0.0	0.0	1.6	0.0	0.0
Prop In Lane	0.03		0.02	0.18		0.07	0.05		0.66	0.37		0.10
Lane Grp Cap(c), veh/h	1213	0	0	1108	0	0	352	0	0	385	0	0
V/C Ratio(X)	0.30	0.00	0.00	0.29	0.00	0.00	0.61	0.00	0.00	0.15	0.00	0.00
Avail Cap(c_a), veh/h	1213	0	0	1108	0	0	647	0	0	655	0	0
HCM Platoon Ratio	1.00	1.00	1.00	1.00	1.00	1.00	1.00	1.00	1.00	1.00	1.00	1.00
Upstream Filter(I)	1.00	0.00	0.00	1.00	0.00	0.00	1.00	0.00	0.00	1.00	0.00	0.00
Uniform Delay (d), s/veh	5.2	0.0	0.0	5.1	0.0	0.0	22.3	0.0	0.0	20.1	0.0	0.0
Incr Delay (d2), s/veh	0.6	0.0	0.0	0.1	0.0	0.0	1.3	0.0	0.0	0.1	0.0	0.0
Initial Q Delay(d3),s/veh	0.0	0.0	0.0	0.0	0.0	0.0	0.0	0.0	0.0	0.0	0.0	0.0
%ile BackOfQ(50%),veh/ln	2.9	0.0	0.0	2.3	0.0	0.0	3.3	0.0	0.0	0.8	0.0	0.0
LnGrp Delay(d),s/veh	5.8	0.0	0.0	5.1	0.0	0.0	23.6	0.0	0.0	20.2	0.0	0.0
LnGrp LOS	A			A			C			C		
Approach Vol, veh/h		367			320			214			59	
Approach Delay, s/veh		5.8			5.1			23.6			20.2	
Approach LOS		A			A			C			C	

Timer	1	2	3	4	5	6	7	8
Assigned Phs		2		4		6		8
Phs Duration (G+Y+Rc), s		41.0		15.8		41.0		15.8
Change Period (Y+Rc), s		6.0		6.0		6.0		6.0
Max Green Setting (Gmax), s		35.0		20.0		35.0		20.0
Max Q Clear Time (g_c+I1), s		7.3		8.9		6.5		3.6
Green Ext Time (p_c), s		1.6		1.0		1.6		1.2

Intersection Summary	
HCM 2010 Ctrl Delay	10.4
HCM 2010 LOS	B

HCM 2010 methodology does not support clustered intersections.

Movement	EBL	EBT	EBR	WBL	WBT	WBR	NBL	NBT	NBR	SBL	SBT	SBR
Lane Configurations												
Traffic Volume (vph)	4	1583	2	13	1151	26	4	0	0	8	0	19
Future Volume (vph)	4	1583	2	13	1151	26	4	0	0	8	0	19
Ideal Flow (vphpl)	1900	1900	1900	1900	1900	1900	1900	1900	1900	1900	1900	1900
Total Lost time (s)	6.0	6.4			6.4	6.4		6.0			5.7	
Lane Util. Factor	1.00	0.95			0.91	1.00		1.00			1.00	
Frpb, ped/bikes	1.00	1.00			1.00	0.91		1.00			1.00	
Flpb, ped/bikes	1.00	1.00			1.00	1.00		1.00			1.00	
Frt	1.00	1.00			1.00	0.85		1.00			0.90	
Flt Protected	0.95	1.00			1.00	1.00		0.95			0.99	
Satd. Flow (prot)	1770	3538			5082	1447		1736			1651	
Flt Permitted	0.95	1.00			0.94	1.00		0.78			0.90	
Satd. Flow (perm)	1770	3538			4780	1447		1429			1511	
Peak-hour factor, PHF	0.96	0.96	0.96	0.96	0.96	0.92	0.96	0.96	0.96	0.96	0.96	0.96
Adj. Flow (vph)	4	1649	2	14	1199	28	4	0	0	8	0	20
RTOR Reduction (vph)	0	0	0	0	0	17	0	0	0	0	27	0
Lane Group Flow (vph)	4	1651	0	0	1213	11	0	4	0	0	1	0
Confl. Peds. (#/hr)	12		1	1		12			2	2		
Heavy Vehicles (%)	2%	2%	2%	2%	2%	2%	4%	4%	4%	2%	2%	2%
Turn Type	Prot	NA		Prot	NA	Perm	Perm	NA		Perm	NA	
Protected Phases	1 13	6 13		5 8!	2 8!			3!			7	
Permitted Phases						2 8	3!			7		
Actuated Green, G (s)	85.4	108.0			70.2	70.2		33.0			6.3	
Effective Green, g (s)	85.4	108.0			70.2	70.2		33.0			6.3	
Actuated g/C Ratio	0.47	0.60			0.39	0.39		0.18			0.03	
Clearance Time (s)								6.0			5.7	
Vehicle Extension (s)								2.5			2.0	
Lane Grp Cap (vph)	839	2122			1945	564		261			52	
v/s Ratio Prot	0.00	c0.47			c0.17							
v/s Ratio Perm					0.08	0.01		c0.00			0.00	
v/c Ratio	0.00	0.78			0.62	0.02		0.02			0.02	
Uniform Delay, d1	24.9	27.0			44.3	33.7		60.2			83.9	
Progression Factor	1.00	1.00			1.00	1.00		1.00			1.00	
Incremental Delay, d2	0.0	1.7			0.5	0.0		0.1			0.7	
Delay (s)	24.9	28.7			44.7	33.7		60.3			84.5	
Level of Service	C	C			D	C		E			F	
Approach Delay (s)		28.7			44.5			60.3			84.5	
Approach LOS		C			D			E			F	

Intersection Summary			
HCM 2000 Control Delay	36.0	HCM 2000 Level of Service	D
HCM 2000 Volume to Capacity ratio	0.78		
Actuated Cycle Length (s)	180.0	Sum of lost time (s)	30.5
Intersection Capacity Utilization	78.7%	ICU Level of Service	D
Analysis Period (min)	15		

! Phase conflict between lane groups.
c Critical Lane Group

Intersection	
Int Delay, s/veh	2.1

Movement	EBL	EBT	EBR	WBL	WBT	WBR	NBL	NBT	NBR	SBL	SBT	SBR
Lane Configurations												
Traffic Vol, veh/h	36	1568	75	10	1065	64	31	13	26	9	6	52
Future Vol, veh/h	36	1568	75	10	1065	64	31	13	26	9	6	52
Conflicting Peds, #/hr	3	0	0	0	0	3	2	0	2	2	0	2
Sign Control	Free	Free	Free	Free	Free	Free	Stop	Stop	Stop	Stop	Stop	Stop
RT Channelized	-	-	None	-	-	None	-	-	None	-	-	None
Storage Length	-	-	80	-	-	100	-	-	-	-	-	-
Veh in Median Storage, #	-	0	-	-	0	-	-	0	-	-	0	-
Grade, %	-	0	-	-	0	-	-	0	-	-	0	-
Peak Hour Factor	97	97	97	97	97	97	97	97	97	97	97	97
Heavy Vehicles, %	2	2	2	2	2	2	1	1	1	1	1	1
Mvmt Flow	37	1616	77	10	1098	66	32	13	27	9	6	54

Major/Minor	Major1			Major2			Minor1			Minor2		
Conflicting Flow All	1101	0	0	1616	0	0	2266	2813	810	2013	2813	554
Stage 1	-	-	-	-	-	-	1691	1691	-	1122	1122	-
Stage 2	-	-	-	-	-	-	575	1122	-	891	1691	-
Critical Hdwy	4.14	-	-	4.14	-	-	7.52	6.52	6.92	7.52	6.52	6.92
Critical Hdwy Stg 1	-	-	-	-	-	-	6.52	5.52	-	6.52	5.52	-
Critical Hdwy Stg 2	-	-	-	-	-	-	6.52	5.52	-	6.52	5.52	-
Follow-up Hdwy	2.22	-	-	2.22	-	-	3.51	4.01	3.31	3.51	4.01	3.31
Pot Cap-1 Maneuver	630	-	-	399	-	-	~ 22	18	325	35	18	479
Stage 1	-	-	-	-	-	-	98	149	-	221	282	-
Stage 2	-	-	-	-	-	-	473	282	-	306	149	-
Platoon blocked, %		-	-		-	-						
Mov Cap-1 Maneuver	629	-	-	398	-	-	-	0	324	-	0	477
Mov Cap-2 Maneuver	-	-	-	-	-	-	-	0	-	-	0	-
Stage 1	-	-	-	-	-	-	98	0	-	221	261	-
Stage 2	-	-	-	-	-	-	379	261	-	-	0	-

Approach	EB	WB	NB	SB
HCM Control Delay, s	3.5	0.4		
HCM LOS			-	-

Minor Lane/Major Mvmt	NBLn1	EBL	EBT	EBR	WBL	WBT	WBR	SBLn1
Capacity (veh/h)	-	629	-	-	398	-	-	-
HCM Lane V/C Ratio	-	0.059	-	-	0.026	-	-	-
HCM Control Delay (s)	-	11.1	3.5	-	14.3	0.3	-	-
HCM Lane LOS	-	B	A	-	B	A	-	-
HCM 95th %tile Q(veh)	-	0.2	-	-	0.1	-	-	-

Notes

~: Volume exceeds capacity $: Delay exceeds 300s +: Computation Not Defined *: All major volume in platoon

Intersection	
Int Delay, s/veh	61.6

Movement	EBL	EBT	EBR	WBL	WBT	WBR	NBL	NBT	NBR	SBL	SBT	SBR
Lane Configurations												
Traffic Vol, veh/h	8	3168	21	41	1757	8	0	0	0	2	0	5
Future Vol, veh/h	8	3168	21	41	1757	8	0	0	0	2	0	5
Conflicting Peds, #/hr	10	0	0	0	0	10	0	0	0	0	0	0
Sign Control	Free	Free	Free	Free	Free	Free	Stop	Stop	Stop	Stop	Stop	Stop
RT Channelized	-	-	None	-	-	None	-	-	None	-	-	None
Storage Length	50	-	-	-	-	-	-	-	-	0	-	90
Veh in Median Storage, #	-	0	-	-	0	-	-	0	-	-	0	-
Grade, %	-	0	-	-	0	-	-	0	-	-	0	-
Peak Hour Factor	99	99	99	99	99	99	99	99	99	99	92	99
Heavy Vehicles, %	2	2	2	2	2	2	2	2	2	26	2	26
Mvmt Flow	8	3200	21	41	1775	8	0	0	0	2	0	5

Major/Minor	Major1			Major2			Minor1			Minor2		
Conflicting Flow All	1793	0	0	3221	0	0	4020	5103	1611	3168	-	901
Stage 1	-	-	-	-	-	-	3227	3227	-	1872	-	-
Stage 2	-	-	-	-	-	-	793	1876	-	1296	-	-
Critical Hdwy	5.34	-	-	5.34	-	-	6.44	6.54	7.14	6.92	-	7.62
Critical Hdwy Stg 1	-	-	-	-	-	-	7.34	5.54	-	7.82	-	-
Critical Hdwy Stg 2	-	-	-	-	-	-	6.74	5.54	-	7.22	-	-
Follow-up Hdwy	3.12	-	-	3.12	-	-	3.82	4.02	3.92	4.06	-	4.16
Pot Cap-1 Maneuver	159	-	-	~ 29	-	-	3	0	80	7	0	207
Stage 1	-	-	-	-	-	-	5	23	-	37	0	-
Stage 2	-	-	-	-	-	-	316	119	-	125	0	-
Platoon blocked, %		-	-		-	-						
Mov Cap-1 Maneuver	159	-	-	~ 29	-	-	-	0	80	-	-	205
Mov Cap-2 Maneuver	-	-	-	-	-	-	-	0	-	-	-	-
Stage 1	-	-	-	-	-	-	5	22	-	35	-	-
Stage 2	-	-	-	-	-	-	-	0	-	119	-	-

Approach	EB	WB	NB	SB
HCM Control Delay, s	0.1	170.7	0	
HCM LOS			A	-

Minor Lane/Major Mvmt	NBLn1	EBL	EBT	EBR	WBL	WBT	WBR	SBLn1	SBLn2
Capacity (veh/h)	-	159	-	-	~ 29	-	-	-	205
HCM Lane V/C Ratio	-	0.051	-	-	1.428	-	-	-	0.025
HCM Control Delay (s)	0	28.9	-	-	$ 523.9	163.2	-	-	23
HCM Lane LOS	A	D	-	-	F	F	-	-	C
HCM 95th %tile Q(veh)	-	0.2	-	-	4.8	-	-	-	0.1

Notes

~: Volume exceeds capacity $: Delay exceeds 300s +: Computation Not Defined *: All major volume in platoon

Intersection	
Int Delay, s/veh	13.5

Movement	EBL	EBT	EBR	WBL	WBT	WBR	NBL	NBT	NBR	SBL	SBT	SBR
Lane Configurations												
Traffic Vol, veh/h	165	2717	83	11	1976	21	0	0	52	0	0	91
Future Vol, veh/h	165	2717	83	11	1976	21	0	0	52	0	0	91
Conflicting Peds, #/hr	0	0	1	1	0	0	2	0	0	0	0	2
Sign Control	Free	Free	Free	Free	Free	Free	Stop	Stop	Stop	Stop	Stop	Stop
RT Channelized	-	-	None	-	-	None	-	-	None	-	-	None
Storage Length	0	-	-	120	-	-	-	-	0	-	-	0
Veh in Median Storage, #	-	0	-	-	0	-	-	0	-	-	0	-
Grade, %	-	0	-	-	0	-	-	0	-	-	0	-
Peak Hour Factor	95	95	95	95	95	95	95	95	95	95	95	95
Heavy Vehicles, %	2	2	2	2	2	2	2	2	2	2	2	2
Mvmt Flow	174	2860	87	12	2080	22	0	0	55	0	0	96

Major/Minor	Major1			Major2			Minor1			Minor2		
Conflicting Flow All	2102	0	0	2948	0	0	-	-	1475	-	-	1053
Stage 1	-	-	-	-	-	-	-	-	-	-	-	-
Stage 2	-	-	-	-	-	-	-	-	-	-	-	-
Critical Hdwy	5.34	-	-	5.34	-	-	-	-	7.14	-	-	7.14
Critical Hdwy Stg 1	-	-	-	-	-	-	-	-	-	-	-	-
Critical Hdwy Stg 2	-	-	-	-	-	-	-	-	-	-	-	-
Follow-up Hdwy	3.12	-	-	3.12	-	-	-	-	3.92	-	-	3.92
Pot Cap-1 Maneuver	~ 111	-	-	40	-	-	0	0	99	0	0	191
Stage 1	-	-	-	-	-	-	0	0	-	0	0	-
Stage 2	-	-	-	-	-	-	0	0	-	0	0	-
Platoon blocked, %		-	-		-	-						
Mov Cap-1 Maneuver	~ 111	-	-	40	-	-	-	-	99	-	-	191
Mov Cap-2 Maneuver	-	-	-	-	-	-	-	-	-	-	-	-
Stage 1	-	-	-	-	-	-	-	-	-	-	-	-
Stage 2	-	-	-	-	-	-	-	-	-	-	-	-

Approach	EB	WB	NB	SB
HCM Control Delay, s	20.1	0.7	79.2	41.4
HCM LOS			F	E

Minor Lane/Major Mvmt	NBLn1	EBL	EBT	EBR	WBL	WBT	WBR	SBLn1
Capacity (veh/h)	99	~ 111	-	-	40	-	-	191
HCM Lane V/C Ratio	0.553	1.565	-	-	0.289	-	-	0.502
HCM Control Delay (s)	79.2	$ 361.9	-	-	128.2	-	-	41.4
HCM Lane LOS	F	F	-	-	F	-	-	E
HCM 95th %tile Q(veh)	2.5	12.9	-	-	1	-	-	2.5

Notes

~: Volume exceeds capacity $: Delay exceeds 300s +: Computation Not Defined *: All major volume in platoon

Intersection	
Int Delay, s/veh	10.5

Movement	EBT	EBR	WBL	WBT	NBL	NBR
Lane Configurations						
Traffic Vol, veh/h	1467	157	68	804	31	31
Future Vol, veh/h	1467	157	68	804	31	31
Conflicting Peds, #/hr	0	3	3	0	0	0
Sign Control	Free	Free	Free	Free	Stop	Stop
RT Channelized	-	None	-	None	-	None
Storage Length	-	-	80	-	0	-
Veh in Median Storage, #	0	-	-	0	0	-
Grade, %	0	-	-	0	0	-
Peak Hour Factor	91	91	91	91	91	91
Heavy Vehicles, %	2	2	2	2	1	1
Mvmt Flow	1612	173	75	884	34	34

Major/Minor	Major1		Major2		Minor1	
Conflicting Flow All	0	0	1788	0	2292	895
Stage 1	-	-	-	-	1701	-
Stage 2	-	-	-	-	591	-
Critical Hdwy	-	-	4.14	-	6.82	6.92
Critical Hdwy Stg 1	-	-	-	-	5.82	-
Critical Hdwy Stg 2	-	-	-	-	5.82	-
Follow-up Hdwy	-	-	2.22	-	3.51	3.31
Pot Cap-1 Maneuver	-	-	342	-	~ 33	286
Stage 1	-	-	-	-	134	-
Stage 2	-	-	-	-	519	-
Platoon blocked, %	-	-		-		
Mov Cap-1 Maneuver	-	-	342	-	~ 26	285
Mov Cap-2 Maneuver	-	-	-	-	~ 26	-
Stage 1	-	-	-	-	134	-
Stage 2	-	-	-	-	405	-

Approach	EB	WB	NB
HCM Control Delay, s	0	1.4	$ 412.7
HCM LOS			F

Minor Lane/Major Mvmt	NBLn1	EBT	EBR	WBL	WBT
Capacity (veh/h)	48	-	-	342	-
HCM Lane V/C Ratio	1.419	-	-	0.218	-
HCM Control Delay (s)	$ 412.7	-	-	18.4	-
HCM Lane LOS	F	-	-	C	-
HCM 95th %tile Q(veh)	6.5	-	-	0.8	-

Notes

~: Volume exceeds capacity $: Delay exceeds 300s +: Computation Not Defined *: All major volume in platoon

Intersection	
Int Delay, s/veh	0.9

Movement	EBT	EBR	WBL	WBT	NBL	NBR
Lane Configurations						
Traffic Vol, veh/h	1627	76	28	740	4	42
Future Vol, veh/h	1627	76	28	740	4	42
Conflicting Peds, #/hr	0	2	2	0	0	0
Sign Control	Free	Free	Free	Free	Stop	Stop
RT Channelized	-	None	-	None	-	None
Storage Length	-	-	80	-	0	-
Veh in Median Storage, #	0	-	-	0	0	-
Grade, %	0	-	-	0	0	-
Peak Hour Factor	91	91	91	91	91	91
Heavy Vehicles, %	2	2	2	2	3	3
Mvmt Flow	1788	84	31	813	4	46

Major/Minor	Major1		Major2		Minor1	
Conflicting Flow All	0	0	1873	0	2300	938
Stage 1	-	-	-	-	1832	-
Stage 2	-	-	-	-	468	-
Critical Hdwy	-	-	4.14	-	6.86	6.96
Critical Hdwy Stg 1	-	-	-	-	5.86	-
Critical Hdwy Stg 2	-	-	-	-	5.86	-
Follow-up Hdwy	-	-	2.22	-	3.53	3.33
Pot Cap-1 Maneuver	-	-	317	-	32	264
Stage 1	-	-	-	-	111	-
Stage 2	-	-	-	-	594	-
Platoon blocked, %	-	-		-		
Mov Cap-1 Maneuver	-	-	317	-	29	263
Mov Cap-2 Maneuver	-	-	-	-	29	-
Stage 1	-	-	-	-	111	-
Stage 2	-	-	-	-	536	-

Approach	EB	WB	NB
HCM Control Delay, s	0	0.6	39.1
HCM LOS			E

Minor Lane/Major Mvmt	NBLn1	EBT	EBR	WBL	WBT
Capacity (veh/h)	155	-	-	317	-
HCM Lane V/C Ratio	0.326	-	-	0.097	-
HCM Control Delay (s)	39.1	-	-	17.6	-
HCM Lane LOS	E	-	-	C	-
HCM 95th %tile Q(veh)	1.3	-	-	0.3	-

Intersection	
Int Delay, s/veh	0.1

Movement	EBL	EBT	WBT	WBR	SBL	SBR
Lane Configurations						
Traffic Vol, veh/h	9	1744	600	5	3	13
Future Vol, veh/h	9	1744	600	5	3	13
Conflicting Peds, #/hr	2	0	0	2	0	0
Sign Control	Free	Free	Free	Free	Stop	Stop
RT Channelized	-	None	-	None	-	None
Storage Length	135	-	-	-	0	-
Veh in Median Storage, #	-	0	0	-	0	-
Grade, %	-	0	0	-	0	-
Peak Hour Factor	97	97	97	97	97	97
Heavy Vehicles, %	1	1	1	1	1	1
Mvmt Flow	9	1798	619	5	3	13

Major/Minor	Major1		Major2		Minor2	
Conflicting Flow All	626	0	-	0	1541	314
Stage 1	-	-	-	-	623	-
Stage 2	-	-	-	-	918	-
Critical Hdwy	4.12	-	-	-	6.82	6.92
Critical Hdwy Stg 1	-	-	-	-	5.82	-
Critical Hdwy Stg 2	-	-	-	-	5.82	-
Follow-up Hdwy	2.21	-	-	-	3.51	3.31
Pot Cap-1 Maneuver	958	-	-	-	107	685
Stage 1	-	-	-	-	500	-
Stage 2	-	-	-	-	352	-
Platoon blocked, %		-	-	-		
Mov Cap-1 Maneuver	958	-	-	-	106	684
Mov Cap-2 Maneuver	-	-	-	-	106	-
Stage 1	-	-	-	-	499	-
Stage 2	-	-	-	-	348	-

Approach	EB	WB	SB
HCM Control Delay, s	0	0	16.2
HCM LOS			C

Minor Lane/Major Mvmt	EBL	EBT	WBT	WBR	SBLn1
Capacity (veh/h)	958	-	-	-	338
HCM Lane V/C Ratio	0.01	-	-	-	0.049
HCM Control Delay (s)	8.8	-	-	-	16.2
HCM Lane LOS	A	-	-	-	C
HCM 95th %tile Q(veh)	0	-	-	-	0.2

HCM 2010 Research does not support Non-NEMA phasing.

Movement	EBT	EBR	WBL	WBT	NBL	NBR
Lane Configurations						
Traffic Volume (vph)	556	15	45	187	92	435
Future Volume (vph)	556	15	45	187	92	435
Ideal Flow (vphpl)	1900	1900	1900	1900	1900	1900
Total Lost time (s)	7.5		7.2	7.5	6.0	7.2
Lane Util. Factor	1.00		1.00	1.00	0.97	1.00
Frpb, ped/bikes	1.00		1.00	1.00	1.00	1.00
Flpb, ped/bikes	1.00		1.00	1.00	1.00	1.00
Frt	1.00		1.00	1.00	1.00	0.85
Flt Protected	1.00		0.95	1.00	0.95	1.00
Satd. Flow (prot)	1855		1787	1881	3400	1568
Flt Permitted	1.00		0.29	1.00	0.95	1.00
Satd. Flow (perm)	1855		552	1881	3400	1568
Peak-hour factor, PHF	0.96	0.96	0.96	0.96	0.96	0.96
Adj. Flow (vph)	579	16	47	195	96	453
RTOR Reduction (vph)	1	0	0	0	0	413
Lane Group Flow (vph)	594	0	47	195	96	40
Confl. Peds. (#/hr)		1	1			6
Heavy Vehicles (%)	2%	2%	1%	1%	3%	3%
Turn Type	NA		pm+pt	NA	Perm	Over
Protected Phases	6		5	2		5
Permitted Phases			2		4	
Actuated Green, G (s)	41.1		54.8	54.8	5.9	6.5
Effective Green, g (s)	41.1		54.8	54.8	5.9	6.5
Actuated g/C Ratio	0.55		0.74	0.74	0.08	0.09
Clearance Time (s)	7.5		7.2	7.5	6.0	7.2
Vehicle Extension (s)	1.0		2.0	1.0	2.5	2.0
Lane Grp Cap (vph)	1027		515	1389	270	137
v/s Ratio Prot	c0.32		0.01	0.10		c0.03
v/s Ratio Perm			0.06		c0.03	
v/c Ratio	0.58		0.09	0.14	0.36	0.29
Uniform Delay, d1	10.9		4.4	2.8	32.3	31.7
Progression Factor	1.00		1.00	1.00	1.00	1.00
Incremental Delay, d2	2.4		0.0	0.2	0.6	0.4
Delay (s)	13.2		4.5	3.0	32.9	32.1
Level of Service	B		A	A	C	C
Approach Delay (s)	13.2			3.3	32.3	
Approach LOS	B			A	C	

Intersection Summary			
HCM 2000 Control Delay	19.0	HCM 2000 Level of Service	B
HCM 2000 Volume to Capacity ratio	0.52		
Actuated Cycle Length (s)	74.2	Sum of lost time (s)	20.7
Intersection Capacity Utilization	70.0%	ICU Level of Service	C
Analysis Period (min)	15		

c Critical Lane Group

Intersection	
Int Delay, s/veh	0.7

Movement	EBL	EBT	WBT	WBR	SBL	SBR
Lane Configurations						
Traffic Vol, veh/h	14	453	273	9	9	32
Future Vol, veh/h	14	453	273	9	9	32
Conflicting Peds, #/hr	2	0	0	2	0	0
Sign Control	Free	Free	Free	Free	Stop	Stop
RT Channelized	-	None	-	None	-	None
Storage Length	-	-	-	-	0	-
Veh in Median Storage, #	-	0	0	-	0	-
Grade, %	-	0	0	-	0	-
Peak Hour Factor	95	95	95	95	95	95
Heavy Vehicles, %	2	2	1	1	1	1
Mvmt Flow	15	477	287	9	9	34

Major/Minor	Major1		Major2		Minor2	
Conflicting Flow All	299	0	-	0	800	294
Stage 1	-	-	-	-	294	-
Stage 2	-	-	-	-	506	-
Critical Hdwy	4.12	-	-	-	6.41	6.21
Critical Hdwy Stg 1	-	-	-	-	5.41	-
Critical Hdwy Stg 2	-	-	-	-	5.41	-
Follow-up Hdwy	2.218	-	-	-	3.509	3.309
Pot Cap-1 Maneuver	1262	-	-	-	356	748
Stage 1	-	-	-	-	759	-
Stage 2	-	-	-	-	608	-
Platoon blocked, %		-	-	-		
Mov Cap-1 Maneuver	1262	-	-	-	349	747
Mov Cap-2 Maneuver	-	-	-	-	349	-
Stage 1	-	-	-	-	758	-
Stage 2	-	-	-	-	597	-

Approach	EB	WB	SB
HCM Control Delay, s	0.2	0	11.5
HCM LOS			B

Minor Lane/Major Mvmt	EBL	EBT	WBT	WBR	SBLn1
Capacity (veh/h)	1262	-	-	-	597
HCM Lane V/C Ratio	0.012	-	-	-	0.072
HCM Control Delay (s)	7.9	0	-	-	11.5
HCM Lane LOS	A	A	-	-	B
HCM 95th %tile Q(veh)	0	-	-	-	0.2

Intersection	
Int Delay, s/veh	0.1

Movement	EBL	EBT	WBT	WBR	SBL	SBR
Lane Configurations						
Traffic Vol, veh/h	4	1781	564	2	4	5
Future Vol, veh/h	4	1781	564	2	4	5
Conflicting Peds, #/hr	3	0	0	3	0	0
Sign Control	Free	Free	Free	Free	Stop	Stop
RT Channelized	-	None	-	None	-	None
Storage Length	60	-	-	-	0	-
Veh in Median Storage, #	-	0	0	-	0	-
Grade, %	-	0	0	-	0	-
Peak Hour Factor	93	93	93	93	93	93
Heavy Vehicles, %	1	1	1	1	3	3
Mvmt Flow	4	1915	606	2	4	5

Major/Minor	Major1		Major2		Minor2	
Conflicting Flow All	612	0	-	0	1577	307
Stage 1	-	-	-	-	611	-
Stage 2	-	-	-	-	966	-
Critical Hdwy	4.12	-	-	-	6.86	6.96
Critical Hdwy Stg 1	-	-	-	-	5.86	-
Critical Hdwy Stg 2	-	-	-	-	5.86	-
Follow-up Hdwy	2.21	-	-	-	3.53	3.33
Pot Cap-1 Maneuver	970	-	-	-	99	686
Stage 1	-	-	-	-	501	-
Stage 2	-	-	-	-	327	-
Platoon blocked, %		-	-	-		
Mov Cap-1 Maneuver	970	-	-	-	98	684
Mov Cap-2 Maneuver	-	-	-	-	98	-
Stage 1	-	-	-	-	500	-
Stage 2	-	-	-	-	325	-

Approach	EB	WB	SB
HCM Control Delay, s	0	0	25.3
HCM LOS			D

Minor Lane/Major Mvmt	EBL	EBT	WBT	WBR	SBLn1
Capacity (veh/h)	970	-	-	-	187
HCM Lane V/C Ratio	0.004	-	-	-	0.052
HCM Control Delay (s)	8.7	-	-	-	25.3
HCM Lane LOS	A	-	-	-	D
HCM 95th %tile Q(veh)	0	-	-	-	0.2

Intersection	
Intersection Delay, s/veh	10.9
Intersection LOS	B

Movement	EBL	EBT	EBR	WBL	WBT	WBR	NBL	NBT	NBR	SBL	SBT	SBR
Lane Configurations												
Traffic Vol, veh/h	22	123	27	0	1	0	1	2	0	264	31	10
Future Vol, veh/h	22	123	27	0	1	0	1	2	0	264	31	10
Peak Hour Factor	0.82	0.82	0.82	0.82	0.82	0.82	0.82	0.82	0.82	0.82	0.82	0.82
Heavy Vehicles, %	1	1	1	1	1	1	1	1	1	1	1	1
Mvmt Flow	27	150	33	0	1	0	1	2	0	322	38	12
Number of Lanes	0	1	0	0	1	0	0	1	0	0	1	0

Approach	EB	WB	NB	SB
Opposing Approach	WB	EB	SB	NB
Opposing Lanes	1	1	1	1
Conflicting Approach Left	SB	NB	EB	WB
Conflicting Lanes Left	1	1	1	1
Conflicting Approach Right	NB	SB	WB	EB
Conflicting Lanes Right	1	1	1	1
HCM Control Delay	9.6	8.2	8	11.7
HCM LOS	A	A	A	B

Lane	NBLn1	EBLn1	WBLn1	SBLn1
Vol Left, %	33%	13%	0%	87%
Vol Thru, %	67%	72%	100%	10%
Vol Right, %	0%	16%	0%	3%
Sign Control	Stop	Stop	Stop	Stop
Traffic Vol by Lane	3	172	1	305
LT Vol	1	22	0	264
Through Vol	2	123	1	31
RT Vol	0	27	0	10
Lane Flow Rate	4	210	1	372
Geometry Grp	1	1	1	1
Degree of Util (X)	0.005	0.277	0.002	0.475
Departure Headway (Hd)	4.937	4.758	5.097	4.593
Convergence, Y/N	Yes	Yes	Yes	Yes
Cap	722	755	700	785
Service Time	2.985	2.789	3.146	2.622
HCM Lane V/C Ratio	0.006	0.278	0.001	0.474
HCM Control Delay	8	9.6	8.2	11.7
HCM Lane LOS	A	A	A	B
HCM 95th-tile Q	0	1.1	0	2.6

Synchro LOS and Delay – Existing Condition – PM

Movement	EBL	EBT	EBR	WBL	WBT	WBR	NBL	NBT	NBR	SBL	SBT	SBR
Lane Configurations												
Traffic Volume (veh/h)	2	1477	98	39	1571	4	115	63	16	6	85	274
Future Volume (veh/h)	2	1477	98	39	1571	4	115	63	16	6	85	274
Number	1	6	16	5	2	12	7	4	14	3	8	18
Initial Q (Qb), veh	0	0	0	0	0	0	0	0	0	0	0	0
Ped-Bike Adj(A_pbT)	1.00		0.99	1.00		0.99	1.00		1.00	1.00		1.00
Parking Bus, Adj	1.00	1.00	1.00	1.00	1.00	1.00	1.00	1.00	1.00	1.00	1.00	1.00
Adj Sat Flow, veh/h/ln	1900	1863	1900	1845	1845	1900	1810	1810	1900	1863	1863	1863
Adj Flow Rate, veh/h	2	1588	105	42	1689	4	124	68	17	6	91	295
Adj No. of Lanes	0	2	0	1	2	0	1	1	0	1	1	1
Peak Hour Factor	0.93	0.93	0.93	0.93	0.93	0.93	0.93	0.93	0.93	0.93	0.93	0.93
Percent Heavy Veh, %	2	2	2	3	3	3	5	5	5	2	2	2
Cap, veh/h	21	2191	144	218	2662	6	182	264	66	232	352	298
Arrive On Green	0.66	0.66	0.66	0.04	0.74	0.74	0.19	0.19	0.19	0.19	0.19	0.19
Sat Flow, veh/h	1	3297	216	1757	3587	8	963	1397	349	1303	1863	1576
Grp Volume(v), veh/h	892	0	803	42	825	868	124	0	85	6	91	295
Grp Sat Flow(s),veh/h/ln	1859	0	1655	1757	1752	1843	963	0	1746	1303	1863	1576
Q Serve(g_s), s	0.0	0.0	57.0	1.2	41.3	41.3	22.7	0.0	7.5	0.7	7.5	33.6
Cycle Q Clear(g_c), s	55.5	0.0	57.0	1.2	41.3	41.3	30.2	0.0	7.5	8.2	7.5	33.6
Prop In Lane	0.00		0.13	1.00		0.00	1.00		0.20	1.00		1.00
Lane Grp Cap(c), veh/h	1255	0	1100	218	1301	1368	182	0	330	232	352	298
V/C Ratio(X)	0.71	0.00	0.73	0.19	0.63	0.63	0.68	0.00	0.26	0.03	0.26	0.99
Avail Cap(c_a), veh/h	1255	0	1100	218	1301	1368	182	0	330	232	352	298
HCM Platoon Ratio	1.00	1.00	1.00	1.00	1.00	1.00	1.00	1.00	1.00	1.00	1.00	1.00
Upstream Filter(I)	1.00	0.00	1.00	1.00	1.00	1.00	1.00	0.00	1.00	1.00	1.00	1.00
Uniform Delay (d), s/veh	19.4	0.0	19.7	18.5	11.3	11.3	75.1	0.0	62.2	65.7	62.3	72.8
Incr Delay (d2), s/veh	1.6	0.0	2.2	2.0	2.4	2.3	18.8	0.0	1.9	0.2	1.8	50.0
Initial Q Delay(d3),s/veh	0.0	0.0	0.0	0.0	0.0	0.0	0.0	0.0	0.0	0.0	0.0	0.0
%ile BackOfQ(50%),veh/ln	28.8	0.0	26.6	0.9	20.6	21.6	7.0	0.0	3.8	0.3	4.0	18.8
LnGrp Delay(d),s/veh	21.1	0.0	21.9	20.5	13.7	13.6	93.9	0.0	64.1	65.9	64.0	122.8
LnGrp LOS	C		C	C	B	B	F		E	E	E	F
Approach Vol, veh/h		1695			1735			209			392	
Approach Delay, s/veh		21.5			13.8			81.8			108.3	
Approach LOS		C			B			F			F	

Timer	1	2	3	4	5	6	7	8
Assigned Phs		2		4	5	6		8
Phs Duration (G+Y+Rc), s		140.0		40.0	14.0	126.0		40.0
Change Period (Y+Rc), s		6.4		6.0	6.0	6.4		6.0
Max Green Setting (Gmax), s		133.6		34.0	8.0	119.6		34.0
Max Q Clear Time (g_c+I1), s		43.3		32.2	3.2	59.0		35.6
Green Ext Time (p_c), s		17.5		0.5	0.0	16.9		0.0

Intersection Summary	
HCM 2010 Ctrl Delay	29.7
HCM 2010 LOS	C

Intersection	
Int Delay, s/veh	0.8

Movement	EBL	EBT	WBT	WBR	SBL	SBR
Lane Configurations						
Traffic Vol, veh/h	18	1667	1946	12	4	16
Future Vol, veh/h	18	1667	1946	12	4	16
Conflicting Peds, #/hr	8	0	0	8	1	4
Sign Control	Free	Free	Free	Free	Stop	Stop
RT Channelized	-	None	-	None	-	None
Storage Length	125	-	-	-	0	-
Veh in Median Storage, #	-	0	0	-	0	-
Grade, %	-	0	0	-	0	-
Peak Hour Factor	97	97	97	97	97	97
Heavy Vehicles, %	1	1	1	1	1	1
Mvmt Flow	19	1719	2006	12	4	16

Major/Minor	Major1		Major2		Minor2	
Conflicting Flow All	2027	0	-	0	2917	1021
Stage 1	-	-	-	-	2020	-
Stage 2	-	-	-	-	897	-
Critical Hdwy	4.12	-	-	-	6.82	6.92
Critical Hdwy Stg 1	-	-	-	-	5.82	-
Critical Hdwy Stg 2	-	-	-	-	5.82	-
Follow-up Hdwy	2.21	-	-	-	3.51	3.31
Pot Cap-1 Maneuver	280	-	-	-	12	236
Stage 1	-	-	-	-	90	-
Stage 2	-	-	-	-	361	-
Platoon blocked, %		-	-	-		
Mov Cap-1 Maneuver	279	-	-	-	11	233
Mov Cap-2 Maneuver	-	-	-	-	11	-
Stage 1	-	-	-	-	89	-
Stage 2	-	-	-	-	334	-

Approach	EB	WB	SB
HCM Control Delay, s	0.2	0	135.7
HCM LOS			F

Minor Lane/Major Mvmt	EBL	EBT	WBT	WBR	SBLn1
Capacity (veh/h)	279	-	-	-	46
HCM Lane V/C Ratio	0.067	-	-	-	0.448
HCM Control Delay (s)	18.8	-	-	-	135.7
HCM Lane LOS	C	-	-	-	F
HCM 95th %tile Q(veh)	0.2	-	-	-	1.6

Intersection	
Intersection Delay, s/veh	22.2
Intersection LOS	C

Movement	EBL	EBT	EBR	WBL	WBT	WBR	NBL	NBT	NBR	SBL	SBT	SBR
Lane Configurations												
Traffic Vol, veh/h	21	207	57	12	456	14	122	50	5	11	83	124
Future Vol, veh/h	21	207	57	12	456	14	122	50	5	11	83	124
Peak Hour Factor	0.96	0.96	0.96	0.96	0.96	0.96	0.96	0.96	0.96	0.96	0.96	0.96
Heavy Vehicles, %	4	4	4	2	2	2	3	3	3	6	6	6
Mvmt Flow	22	216	59	13	475	15	127	52	5	11	86	129
Number of Lanes	0	1	0	0	1	0	0	1	0	0	1	0

Approach	EB	WB	NB	SB
Opposing Approach	WB	EB	SB	NB
Opposing Lanes	1	1	1	1
Conflicting Approach Left	SB	NB	EB	WB
Conflicting Lanes Left	1	1	1	1
Conflicting Approach Right	NB	SB	WB	EB
Conflicting Lanes Right	1	1	1	1
HCM Control Delay	16.1	32.2	14.3	14.4
HCM LOS	C	D	B	B

Lane	NBLn1	EBLn1	WBLn1	SBLn1
Vol Left, %	69%	7%	2%	5%
Vol Thru, %	28%	73%	95%	38%
Vol Right, %	3%	20%	3%	57%
Sign Control	Stop	Stop	Stop	Stop
Traffic Vol by Lane	177	285	482	218
LT Vol	122	21	12	11
Through Vol	50	207	456	83
RT Vol	5	57	14	124
Lane Flow Rate	184	297	502	227
Geometry Grp	1	1	1	1
Degree of Util (X)	0.365	0.521	0.834	0.417
Departure Headway (Hd)	7.121	6.322	5.98	6.617
Convergence, Y/N	Yes	Yes	Yes	Yes
Cap	503	567	603	540
Service Time	5.2	4.39	4.037	4.692
HCM Lane V/C Ratio	0.366	0.524	0.833	0.42
HCM Control Delay	14.3	16.1	32.2	14.4
HCM Lane LOS	B	C	D	B
HCM 95th-tile Q	1.7	3	8.8	2

HCM 2010 edition methodology does not support a perm + prot left-turn type from a shared lane. Left-turn bay is needed for phases 3.

Movement	EBL	EBT	EBR	WBL	WBT	WBR	NBL	NBT	NBR	SBL	SBT	SBR
Lane Configurations												
Traffic Volume (vph)	63	1333	35	40	1429	105	54	22	43	74	27	67
Future Volume (vph)	63	1333	35	40	1429	105	54	22	43	74	27	67
Ideal Flow (vphpl)	1900	1900	1900	1900	1900	1900	1900	1900	1900	1900	1900	1900
Total Lost time (s)	6.0	6.0		6.0	6.0			6.0			6.0	6.0
Lane Util. Factor	1.00	0.95		1.00	0.95			1.00			1.00	1.00
Frpb, ped/bikes	1.00	1.00		1.00	1.00			0.99			1.00	1.00
Flpb, ped/bikes	1.00	1.00		1.00	1.00			1.00			1.00	1.00
Frt	1.00	1.00		1.00	0.99			0.95			1.00	0.85
Flt Protected	0.95	1.00		0.95	1.00			0.98			0.96	1.00
Satd. Flow (prot)	1787	3556		1770	3486			1702			1779	1568
Flt Permitted	0.09	1.00		0.13	1.00			0.80			0.58	1.00
Satd. Flow (perm)	175	3556		234	3486			1396			1066	1568
Peak-hour factor, PHF	0.92	0.92	0.92	0.92	0.92	0.92	0.92	0.92	0.92	0.92	0.92	0.92
Adj. Flow (vph)	68	1449	38	43	1553	114	59	24	47	80	29	73
RTOR Reduction (vph)	0	1	0	0	3	0	0	11	0	0	0	42
Lane Group Flow (vph)	68	1486	0	43	1664	0	0	119	0	0	109	31
Confl. Peds. (#/hr)	12		8	8		12			3	3		
Heavy Vehicles (%)	1%	1%	1%	2%	2%	2%	3%	3%	3%	3%	3%	3%
Turn Type	pm+pt	NA		pm+pt	NA		Perm	NA		pm+pt	NA	pm+ov
Protected Phases	1	6		5	2			4		3	8	1
Permitted Phases	6			2			4			8		8
Actuated Green, G (s)	140.0	133.0		140.0	133.0			20.0			32.0	39.0
Effective Green, g (s)	140.0	133.0		140.0	133.0			20.0			32.0	39.0
Actuated g/C Ratio	0.74	0.70		0.74	0.70			0.11			0.17	0.21
Clearance Time (s)	6.0	6.0		6.0	6.0			6.0			6.0	6.0
Vehicle Extension (s)	3.0	1.0		3.0	1.0			2.5			2.5	3.0
Lane Grp Cap (vph)	188	2489		229	2440			146			202	371
v/s Ratio Prot	c0.01	0.42		0.01	c0.48						c0.02	0.00
v/s Ratio Perm	0.25			0.13				c0.09			0.07	0.02
v/c Ratio	0.36	0.60		0.19	0.68			0.82			0.54	0.08
Uniform Delay, d1	15.0	14.7		11.1	16.4			83.2			72.3	61.0
Progression Factor	1.00	1.00		1.00	1.00			1.00			1.00	1.00
Incremental Delay, d2	5.3	1.1		1.8	1.6			37.7			10.0	0.4
Delay (s)	20.3	15.8		12.9	17.9			120.9			82.2	61.5
Level of Service	C	B		B	B			F			F	E
Approach Delay (s)		16.0			17.8			120.9			73.9	
Approach LOS		B			B			F			E	

Intersection Summary			
HCM 2000 Control Delay	23.6	HCM 2000 Level of Service	C
HCM 2000 Volume to Capacity ratio	0.69		
Actuated Cycle Length (s)	190.0	Sum of lost time (s)	24.0
Intersection Capacity Utilization	77.1%	ICU Level of Service	D
Analysis Period (min)	15		

c Critical Lane Group

Intersection	
Int Delay, s/veh	21.3

Movement	EBL	EBT	EBR	WBL	WBT	WBR	NBL	NBT	NBR	SBL	SBT	SBR
Lane Configurations												
Traffic Vol, veh/h	44	1408	15	7	1377	23	9	6	26	5	8	96
Future Vol, veh/h	44	1408	15	7	1377	23	9	6	26	5	8	96
Conflicting Peds, #/hr	3	0	5	5	0	3	3	0	2	2	0	3
Sign Control	Free	Free	Free	Free	Free	Free	Stop	Stop	Stop	Stop	Stop	Stop
RT Channelized	-	-	None	-	-	None	-	-	None	-	-	None
Storage Length	0	-	-	50	-	-	-	-	-	150	-	-
Veh in Median Storage, #	-	0	-	-	0	-	-	0	-	-	0	-
Grade, %	-	0	-	-	0	-	-	0	-	-	0	-
Peak Hour Factor	89	89	89	89	89	89	89	89	89	89	89	89
Heavy Vehicles, %	2	2	2	2	2	2	4	4	4	4	4	4
Mvmt Flow	49	1582	17	8	1547	26	10	7	29	6	9	108

Major/Minor	Major1			Major2			Minor1			Minor2		
Conflicting Flow All	1576	0	0	1604	0	0	2491	3286	806	2474	3282	793
Stage 1	-	-	-	-	-	-	1694	1694	-	1579	1579	-
Stage 2	-	-	-	-	-	-	797	1592	-	895	1703	-
Critical Hdwy	4.14	-	-	4.14	-	-	7.58	6.58	6.98	7.58	6.58	6.98
Critical Hdwy Stg 1	-	-	-	-	-	-	6.58	5.58	-	6.58	5.58	-
Critical Hdwy Stg 2	-	-	-	-	-	-	6.58	5.58	-	6.58	5.58	-
Follow-up Hdwy	2.22	-	-	2.22	-	-	3.54	4.04	3.34	3.54	4.04	3.34
Pot Cap-1 Maneuver	414	-	-	404	-	-	14	8	321	15	~ 8	327
Stage 1	-	-	-	-	-	-	94	144	-	112	165	-
Stage 2	-	-	-	-	-	-	342	162	-	298	143	-
Platoon blocked, %		-	-		-	-						
Mov Cap-1 Maneuver	413	-	-	403	-	-	-	7	319	~ 2	~ 7	325
Mov Cap-2 Maneuver	-	-	-	-	-	-	-	7	-	~ 2	~ 7	-
Stage 1	-	-	-	-	-	-	82	126	-	98	161	-
Stage 2	-	-	-	-	-	-	211	158	-	225	125	-

Approach	EB	WB	NB	SB
HCM Control Delay, s	0.4	0.1		$ 585.5
HCM LOS			-	F

Minor Lane/Major Mvmt	NBLn1	EBL	EBT	EBR	WBL	WBT	WBR	SBLn1	SBLn2
Capacity (veh/h)	-	413	-	-	403	-	-	2	72
HCM Lane V/C Ratio	-	0.12	-	-	0.02	-	-	2.809	1.623
HCM Control Delay (s)	-	14.9	-	-	14.1	-	$	3774.4	$ 432.2
HCM Lane LOS	-	B	-	-	B	-	-	F	F
HCM 95th %tile Q(veh)	-	0.4	-	-	0.1	-	-	1.7	10

Notes

~: Volume exceeds capacity $: Delay exceeds 300s +: Computation Not Defined *: All major volume in platoon

Intersection	
Intersection Delay, s/veh	9.2
Intersection LOS	A

Movement	EBL	EBT	EBR	WBL	WBT	WBR	NBL	NBT	NBR	SBL	SBT	SBR
Lane Configurations												
Traffic Vol, veh/h	9	80	9	7	273	9	13	14	3	3	36	40
Future Vol, veh/h	9	80	9	7	273	9	13	14	3	3	36	40
Peak Hour Factor	0.94	0.94	0.94	0.94	0.94	0.94	0.94	0.94	0.94	0.94	0.94	0.94
Heavy Vehicles, %	3	3	3	2	2	2	2	2	2	7	7	7
Mvmt Flow	10	85	10	7	290	10	14	15	3	3	38	43
Number of Lanes	0	1	0	0	1	0	0	1	0	0	1	0

Approach	EB	WB	NB	SB
Opposing Approach	WB	EB	SB	NB
Opposing Lanes	1	1	1	1
Conflicting Approach Left	SB	NB	EB	WB
Conflicting Lanes Left	1	1	1	1
Conflicting Approach Right	NB	SB	WB	EB
Conflicting Lanes Right	1	1	1	1
HCM Control Delay	8.2	9.8	8.3	8.3
HCM LOS	A	A	A	A

Lane	NBLn1	EBLn1	WBLn1	SBLn1
Vol Left, %	43%	9%	2%	4%
Vol Thru, %	47%	82%	94%	46%
Vol Right, %	10%	9%	3%	51%
Sign Control	Stop	Stop	Stop	Stop
Traffic Vol by Lane	30	98	289	79
LT Vol	13	9	7	3
Through Vol	14	80	273	36
RT Vol	3	9	9	40
Lane Flow Rate	32	104	307	84
Geometry Grp	1	1	1	1
Degree of Util (X)	0.044	0.131	0.369	0.109
Departure Headway (Hd)	4.994	4.521	4.317	4.686
Convergence, Y/N	Yes	Yes	Yes	Yes
Cap	716	793	836	765
Service Time	3.027	2.544	2.335	2.716
HCM Lane V/C Ratio	0.045	0.131	0.367	0.11
HCM Control Delay	8.3	8.2	9.8	8.3
HCM Lane LOS	A	A	A	A
HCM 95th-tile Q	0.1	0.4	1.7	0.4

Intersection	
Int Delay, s/veh	4.5

Movement	EBL	EBT	EBR	WBL	WBT	WBR	NBL	NBT	NBR	SBL	SBT	SBR
Lane Configurations												
Traffic Vol, veh/h	7	70	12	32	258	38	14	53	14	14	59	16
Future Vol, veh/h	7	70	12	32	258	38	14	53	14	14	59	16
Conflicting Peds, #/hr	2	0	2	2	0	2	0	0	2	2	0	0
Sign Control	Free	Free	Free	Free	Free	Free	Stop	Stop	Stop	Stop	Stop	Stop
RT Channelized	-	-	None	-	-	None	-	-	None	-	-	None
Storage Length	-	-	-	-	-	-	-	-	-	-	-	-
Veh in Median Storage, #	-	0	-	-	0	-	-	0	-	-	0	-
Grade, %	-	0	-	-	0	-	-	0	-	-	0	-
Peak Hour Factor	94	94	94	94	94	94	94	94	94	94	94	94
Heavy Vehicles, %	1	1	1	2	2	2	3	3	3	2	2	2
Mvmt Flow	7	74	13	34	274	40	15	56	15	15	63	17

Major/Minor	Major1			Major2			Minor1			Minor2		
Conflicting Flow All	317	0	0	89	0	0	501	483	85	498	469	297
Stage 1	-	-	-	-	-	-	98	98	-	365	365	-
Stage 2	-	-	-	-	-	-	403	385	-	133	104	-
Critical Hdwy	4.11	-	-	4.12	-	-	7.13	6.53	6.23	7.12	6.52	6.22
Critical Hdwy Stg 1	-	-	-	-	-	-	6.13	5.53	-	6.12	5.52	-
Critical Hdwy Stg 2	-	-	-	-	-	-	6.13	5.53	-	6.12	5.52	-
Follow-up Hdwy	2.209	-	-	2.218	-	-	3.527	4.027	3.327	3.518	4.018	3.318
Pot Cap-1 Maneuver	1249	-	-	1506	-	-	479	482	971	483	492	742
Stage 1	-	-	-	-	-	-	906	812	-	654	623	-
Stage 2	-	-	-	-	-	-	622	609	-	870	809	-
Platoon blocked, %		-	-		-	-						
Mov Cap-1 Maneuver	1249	-	-	1503	-	-	409	464	967	419	474	741
Mov Cap-2 Maneuver	-	-	-	-	-	-	409	464	-	419	474	-
Stage 1	-	-	-	-	-	-	899	806	-	649	604	-
Stage 2	-	-	-	-	-	-	529	591	-	790	803	-

Approach	EB	WB	NB	SB
HCM Control Delay, s	0.6	0.7	13.8	14
HCM LOS			B	B

Minor Lane/Major Mvmt	NBLn1	EBL	EBT	EBR	WBL	WBT	WBR	SBLn1
Capacity (veh/h)	497	1249	-	-	1503	-	-	496
HCM Lane V/C Ratio	0.173	0.006	-	-	0.023	-	-	0.191
HCM Control Delay (s)	13.8	7.9	0	-	7.5	0	-	14
HCM Lane LOS	B	A	A	-	A	A	-	B
HCM 95th %tile Q(veh)	0.6	0	-	-	0.1	-	-	0.7

Movement	EBL	EBT	EBR	WBL	WBT	WBR	NBL	NBT	NBR	SBL	SBT	SBR
Lane Configurations												
Traffic Volume (veh/h)	1	138	12	105	465	27	14	36	66	19	47	13
Future Volume (veh/h)	1	138	12	105	465	27	14	36	66	19	47	13
Number	5	2	12	1	6	16	7	4	14	3	8	18
Initial Q (Qb), veh	0	0	0	0	0	0	0	0	0	0	0	0
Ped-Bike Adj(A_pbT)	1.00		1.00	1.00		1.00	1.00		1.00	1.00		1.00
Parking Bus, Adj	1.00	1.00	1.00	1.00	1.00	1.00	1.00	1.00	1.00	1.00	1.00	1.00
Adj Sat Flow, veh/h/ln	1900	1881	1900	1900	1881	1900	1900	1863	1900	1900	1863	1900
Adj Flow Rate, veh/h	1	145	13	111	489	28	15	38	69	20	49	14
Adj No. of Lanes	0	1	0	0	1	0	0	1	0	0	1	0
Peak Hour Factor	0.95	0.95	0.95	0.95	0.95	0.95	0.95	0.95	0.95	0.95	0.95	0.95
Percent Heavy Veh, %	1	1	1	1	1	1	2	2	2	2	2	2
Cap, veh/h	75	1049	93	224	895	48	99	82	127	126	161	40
Arrive On Green	0.62	0.62	0.62	0.62	0.62	0.62	0.14	0.14	0.14	0.14	0.14	0.14
Sat Flow, veh/h	1	1700	151	223	1450	78	114	602	932	248	1184	291
Grp Volume(v), veh/h	159	0	0	628	0	0	122	0	0	83	0	0
Grp Sat Flow(s),veh/h/ln	1853	0	0	1751	0	0	1649	0	0	1723	0	0
Q Serve(g_s), s	0.0	0.0	0.0	1.8	0.0	0.0	0.5	0.0	0.0	0.0	0.0	0.0
Cycle Q Clear(g_c), s	1.7	0.0	0.0	9.7	0.0	0.0	3.3	0.0	0.0	2.0	0.0	0.0
Prop In Lane	0.01		0.08	0.18		0.04	0.12		0.57	0.24		0.17
Lane Grp Cap(c), veh/h	1218	0	0	1167	0	0	308	0	0	327	0	0
V/C Ratio(X)	0.13	0.00	0.00	0.54	0.00	0.00	0.40	0.00	0.00	0.25	0.00	0.00
Avail Cap(c_a), veh/h	1218	0	0	1167	0	0	753	0	0	776	0	0
HCM Platoon Ratio	1.00	1.00	1.00	1.00	1.00	1.00	1.00	1.00	1.00	1.00	1.00	1.00
Upstream Filter(I)	1.00	0.00	0.00	1.00	0.00	0.00	1.00	0.00	0.00	1.00	0.00	0.00
Uniform Delay (d), s/veh	3.9	0.0	0.0	5.4	0.0	0.0	19.6	0.0	0.0	19.0	0.0	0.0
Incr Delay (d2), s/veh	0.2	0.0	0.0	0.3	0.0	0.0	0.6	0.0	0.0	0.3	0.0	0.0
Initial Q Delay(d3),s/veh	0.0	0.0	0.0	0.0	0.0	0.0	0.0	0.0	0.0	0.0	0.0	0.0
%ile BackOfQ(50%),veh/ln	1.0	0.0	0.0	4.8	0.0	0.0	1.6	0.0	0.0	1.0	0.0	0.0
LnGrp Delay(d),s/veh	4.1	0.0	0.0	5.7	0.0	0.0	20.2	0.0	0.0	19.3	0.0	0.0
LnGrp LOS	A			A			C			B		
Approach Vol, veh/h		159			628			122			83	
Approach Delay, s/veh		4.1			5.7			20.2			19.3	
Approach LOS		A			A			C			B	

Timer	1	2	3	4	5	6	7	8
Assigned Phs		2		4		6		8
Phs Duration (G+Y+Rc), s		36.0		12.6		36.0		12.6
Change Period (Y+Rc), s		6.0		6.0		6.0		6.0
Max Green Setting (Gmax), s		30.0		20.0		30.0		20.0
Max Q Clear Time (g_c+I1), s		3.7		5.3		11.7		4.0
Green Ext Time (p_c), s		1.9		0.8		1.9		0.8

Intersection Summary	
HCM 2010 Ctrl Delay	8.3
HCM 2010 LOS	A

HCM 2010 methodology does not support clustered intersections.

Movement	EBL	EBT	EBR	WBL	WBT	WBR	NBL	NBT	NBR	SBL	SBT	SBR
Lane Configurations												
Traffic Volume (vph)	16	1397	12	12	1300	24	13	3	6	13	0	9
Future Volume (vph)	16	1397	12	12	1300	24	13	3	6	13	0	9
Ideal Flow (vphpl)	1900	1900	1900	1900	1900	1900	1900	1900	1900	1900	1900	1900
Total Lost time (s)	6.0	6.4			6.4	6.4		6.0			5.7	
Lane Util. Factor	1.00	0.95			0.91	1.00		1.00			1.00	
Frpb, ped/bikes	1.00	1.00			1.00	0.96		1.00			1.00	
Flpb, ped/bikes	1.00	1.00			1.00	1.00		1.00			1.00	
Frt	1.00	1.00			1.00	0.85		0.96			0.94	
Flt Protected	0.95	1.00			1.00	1.00		0.97			0.97	
Satd. Flow (prot)	1770	3534			5083	1525		1705			1705	
Flt Permitted	0.95	1.00			0.94	1.00		0.87			0.84	
Satd. Flow (perm)	1770	3534			4780	1525		1536			1470	
Peak-hour factor, PHF	0.94	0.94	0.94	0.94	0.94	0.94	0.94	0.94	0.94	0.94	0.94	0.94
Adj. Flow (vph)	17	1486	13	13	1383	26	14	3	6	14	0	10
RTOR Reduction (vph)	0	0	0	0	0	14	0	4	0	0	22	0
Lane Group Flow (vph)	17	1499	0	0	1396	12	0	19	0	0	2	0
Confl. Peds. (#/hr)	3		2	2		3			1	1		
Heavy Vehicles (%)	2%	2%	2%	2%	2%	2%	4%	4%	4%	2%	2%	2%
Turn Type	Prot	NA		Prot	NA	Perm	Perm	NA		Perm	NA	
Protected Phases	1 13	6 13		5 8!	2 8!			3!			7	
Permitted Phases						2 8	3!			7		
Actuated Green, G (s)	60.2	91.7			85.1	85.1		46.3			16.6	
Effective Green, g (s)	60.2	91.7			85.1	85.1		46.3			16.6	
Actuated g/C Ratio	0.33	0.51			0.47	0.47		0.26			0.09	
Clearance Time (s)								6.0			5.7	
Vehicle Extension (s)								2.5			2.0	
Lane Grp Cap (vph)	591	1800			2351	720		395			135	
v/s Ratio Prot	0.01	c0.42			c0.18							
v/s Ratio Perm					0.10	0.01		c0.01			0.00	
v/c Ratio	0.03	0.83			0.59	0.02		0.05			0.02	
Uniform Delay, d1	40.3	37.6			34.8	25.2		50.3			74.3	
Progression Factor	1.00	1.00			1.00	1.00		1.00			1.00	
Incremental Delay, d2	0.0	3.3			0.3	0.0		0.2			0.2	
Delay (s)	40.3	40.9			35.1	25.2		50.5			74.5	
Level of Service	D	D			D	C		D			E	
Approach Delay (s)		40.9			34.9			50.5			74.5	
Approach LOS		D			C			D			E	

Intersection Summary			
HCM 2000 Control Delay	38.4	HCM 2000 Level of Service	D
HCM 2000 Volume to Capacity ratio	0.74		
Actuated Cycle Length (s)	180.0	Sum of lost time (s)	30.5
Intersection Capacity Utilization	73.8%	ICU Level of Service	D
Analysis Period (min)	15		

! Phase conflict between lane groups.
c Critical Lane Group

Intersection	
Int Delay, s/veh	114.7

Movement	EBL	EBT	EBR	WBL	WBT	WBR	NBL	NBT	NBR	SBL	SBT	SBR
Lane Configurations												
Traffic Vol, veh/h	56	1347	56	12	1125	84	44	8	20	8	6	26
Future Vol, veh/h	56	1347	56	12	1125	84	44	8	20	8	6	26
Conflicting Peds, #/hr	1	0	4	4	0	1	0	0	1	1	0	0
Sign Control	Free	Free	Free	Free	Free	Free	Stop	Stop	Stop	Stop	Stop	Stop
RT Channelized	-	-	None	-	-	None	-	-	None	-	-	None
Storage Length	-	-	80	-	-	100	-	-	-	-	-	-
Veh in Median Storage, #	-	0	-	-	0	-	-	0	-	-	0	-
Grade, %	-	0	-	-	0	-	-	0	-	-	0	-
Peak Hour Factor	96	96	96	96	96	96	96	96	96	96	96	96
Heavy Vehicles, %	2	2	2	2	2	2	1	1	1	1	1	1
Mvmt Flow	58	1403	58	13	1172	88	46	8	21	8	6	27

Major/Minor	Major1			Major2			Minor1			Minor2		
Conflicting Flow All	1173	0	0	1407	0	0	2138	2722	707	2021	2722	587
Stage 1	-	-	-	-	-	-	1524	1524	-	1198	1198	-
Stage 2	-	-	-	-	-	-	614	1198	-	823	1524	-
Critical Hdwy	4.14	-	-	4.14	-	-	7.52	6.52	6.92	7.52	6.52	6.92
Critical Hdwy Stg 1	-	-	-	-	-	-	6.52	5.52	-	6.52	5.52	-
Critical Hdwy Stg 2	-	-	-	-	-	-	6.52	5.52	-	6.52	5.52	-
Follow-up Hdwy	2.22	-	-	2.22	-	-	3.51	4.01	3.31	3.51	4.01	3.31
Pot Cap-1 Maneuver	591	-	-	481	-	-	~ 28	21	380	34	21	455
Stage 1	-	-	-	-	-	-	125	180	-	199	259	-
Stage 2	-	-	-	-	-	-	448	259	-	336	180	-
Platoon blocked, %		-	-		-	-						
Mov Cap-1 Maneuver	591	-	-	481	-	-	~ 7	9	378	~ 4	9	455
Mov Cap-2 Maneuver	-	-	-	-	-	-	~ 7	9	-	~ 4	9	-
Stage 1	-	-	-	-	-	-	57	82	-	91	235	-
Stage 2	-	-	-	-	-	-	372	235	-	131	82	-

Approach	EB	WB	NB	SB
HCM Control Delay, s	2.2	0.5	$ 3658.9	$ 1323.2
HCM LOS			F	F

Minor Lane/Major Mvmt	NBLn1	EBL	EBT	EBR	WBL	WBT	WBR	SBLn1
Capacity (veh/h)	10	591	-	-	481	-	-	15
HCM Lane V/C Ratio	7.5	0.099	-	-	0.026	-	-	2.778
HCM Control Delay (s)	$ 3658.9	11.8	1.9	-	12.7	0.4		$ 1323.2
HCM Lane LOS	F	B	A	-	B	A	-	F
HCM 95th %tile Q(veh)	10.7	0.3	-	-	0.1	-	-	6

Notes

~: Volume exceeds capacity $: Delay exceeds 300s +: Computation Not Defined *: All major volume in platoon

Intersection	
Int Delay, s/veh	0.4

Movement	EBL	EBT	EBR	WBL	WBT	WBR	NBL	NBT	NBR	SBL	SBT	SBR
Lane Configurations												
Traffic Vol, veh/h	4	1963	12	19	1764	4	0	0	0	1	0	0
Future Vol, veh/h	4	1963	12	19	1764	4	0	0	0	1	0	0
Conflicting Peds, #/hr	1	0	4	4	0	1	0	0	1	1	0	0
Sign Control	Free	Free	Free	Free	Free	Free	Stop	Stop	Stop	Stop	Stop	Stop
RT Channelized	-	-	None	-	-	None	-	-	None	-	-	None
Storage Length	50	-	-	-	-	-	-	-	-	0	-	90
Veh in Median Storage, #	-	0	-	-	0	-	-	0	-	-	0	-
Grade, %	-	0	-	-	0	-	-	0	-	-	0	-
Peak Hour Factor	90	90	90	90	90	90	90	90	90	90	90	90
Heavy Vehicles, %	2	2	2	2	2	2	2	2	2	26	2	26
Mvmt Flow	4	2181	13	21	1960	4	0	0	0	1	0	0

Major/Minor	Major1			Major2			Minor1			Minor2		
Conflicting Flow All	1965	0	0	2198	0	0	3027	4209	1102	2887	-	983
Stage 1	-	-	-	-	-	-	2201	2201	-	2005	-	-
Stage 2	-	-	-	-	-	-	826	2008	-	882	-	-
Critical Hdwy	5.34	-	-	5.34	-	-	6.44	6.54	7.14	6.92	-	7.62
Critical Hdwy Stg 1	-	-	-	-	-	-	7.34	5.54	-	7.82	-	-
Critical Hdwy Stg 2	-	-	-	-	-	-	6.74	5.54	-	7.22	-	-
Follow-up Hdwy	3.12	-	-	3.12	-	-	3.82	4.02	3.92	4.06	-	4.16
Pot Cap-1 Maneuver	130	-	-	99	-	-	14	2	177	12	0	181
Stage 1	-	-	-	-	-	-	27	81	-	29	0	-
Stage 2	-	-	-	-	-	-	301	102	-	239	0	-
Platoon blocked, %		-	-		-	-						
Mov Cap-1 Maneuver	130	-	-	99	-	-	14	2	176	12	-	181
Mov Cap-2 Maneuver	-	-	-	-	-	-	14	2	-	12	-	-
Stage 1	-	-	-	-	-	-	26	78	-	28	-	-
Stage 2	-	-	-	-	-	-	301	102	-	231	-	-

Approach	EB	WB	NB	SB
HCM Control Delay, s	0.1	0.5	0	$ 333.6
HCM LOS			A	F

Minor Lane/Major Mvmt	NBLn1	EBL	EBT	EBR	WBL	WBT	WBR	SBLn1	SBLn2
Capacity (veh/h)	-	130	-	-	99	-	-	12	-
HCM Lane V/C Ratio	-	0.034	-	-	0.213	-	-	0.093	-
HCM Control Delay (s)	0	33.7	-	-	51	0	-	$ 333.6	0
HCM Lane LOS	A	D	-	-	F	A	-	F	A
HCM 95th %tile Q(veh)	-	0.1	-	-	0.8	-	-	0.3	-

Notes

~: Volume exceeds capacity $: Delay exceeds 300s +: Computation Not Defined *: All major volume in platoon

Intersection	
Int Delay, s/veh	2.4

Movement	EBL	EBT	EBR	WBL	WBT	WBR	NBL	NBT	NBR	SBL	SBT	SBR
Lane Configurations												
Traffic Vol, veh/h	49	1486	197	23	1878	4	0	0	63	0	0	98
Future Vol, veh/h	49	1486	197	23	1878	4	0	0	63	0	0	98
Conflicting Peds, #/hr	0	0	1	1	0	0	7	0	0	0	0	7
Sign Control	Free	Free	Free	Free	Free	Free	Stop	Stop	Stop	Stop	Stop	Stop
RT Channelized	-	-	None	-	-	None	-	-	None	-	-	None
Storage Length	0	-	-	120	-	-	-	-	0	-	-	0
Veh in Median Storage, #	-	0	-	-	0	-	-	0	-	-	0	-
Grade, %	-	0	-	-	0	-	-	0	-	-	0	-
Peak Hour Factor	93	93	93	93	93	93	93	93	93	93	93	93
Heavy Vehicles, %	2	2	2	2	2	2	2	2	2	2	2	2
Mvmt Flow	53	1598	212	25	2019	4	0	0	68	0	0	105

Major/Minor	Major1			Major2			Minor1			Minor2		
Conflicting Flow All	2024	0	0	1811	0	0	-	-	906	-	-	1019
Stage 1	-	-	-	-	-	-	-	-	-	-	-	-
Stage 2	-	-	-	-	-	-	-	-	-	-	-	-
Critical Hdwy	5.34	-	-	5.34	-	-	-	-	7.14	-	-	7.14
Critical Hdwy Stg 1	-	-	-	-	-	-	-	-	-	-	-	-
Critical Hdwy Stg 2	-	-	-	-	-	-	-	-	-	-	-	-
Follow-up Hdwy	3.12	-	-	3.12	-	-	-	-	3.92	-	-	3.92
Pot Cap-1 Maneuver	122	-	-	156	-	-	0	0	240	0	0	201
Stage 1	-	-	-	-	-	-	0	0	-	0	0	-
Stage 2	-	-	-	-	-	-	0	0	-	0	0	-
Platoon blocked, %		-	-		-	-						
Mov Cap-1 Maneuver	121	-	-	156	-	-	-	-	240	-	-	200
Mov Cap-2 Maneuver	-	-	-	-	-	-	-	-	-	-	-	-
Stage 1	-	-	-	-	-	-	-	-	-	-	-	-
Stage 2	-	-	-	-	-	-	-	-	-	-	-	-

Approach	EB	WB	NB	SB
HCM Control Delay, s	1.6	0.4	25.8	41.4
HCM LOS			D	E

Minor Lane/Major Mvmt	NBLn1	EBL	EBT	EBR	WBL	WBT	WBR	SBLn1
Capacity (veh/h)	240	121	-	-	156	-	-	200
HCM Lane V/C Ratio	0.282	0.435	-	-	0.159	-	-	0.527
HCM Control Delay (s)	25.8	55.9	-	-	32.4	-	-	41.4
HCM Lane LOS	D	F	-	-	D	-	-	E
HCM 95th %tile Q(veh)	1.1	1.9	-	-	0.5	-	-	2.7

Intersection	
Int Delay, s/veh	0.5

Movement	EBT	EBR	WBL	WBT	NBL	NBR
Lane Configurations						
Traffic Vol, veh/h	850	24	16	1509	14	16
Future Vol, veh/h	850	24	16	1509	14	16
Conflicting Peds, #/hr	0	4	4	0	0	2
Sign Control	Free	Free	Free	Free	Stop	Stop
RT Channelized	-	None	-	None	-	None
Storage Length	-	-	80	-	0	-
Veh in Median Storage, #	0	-	-	0	0	-
Grade, %	0	-	-	0	0	-
Peak Hour Factor	97	97	97	97	97	97
Heavy Vehicles, %	2	2	2	2	1	1
Mvmt Flow	876	25	16	1556	14	16

Major/Minor	Major1		Major2		Minor1	
Conflicting Flow All	0	0	905	0	1704	457
Stage 1	-	-	-	-	893	-
Stage 2	-	-	-	-	811	-
Critical Hdwy	-	-	4.14	-	6.82	6.92
Critical Hdwy Stg 1	-	-	-	-	5.82	-
Critical Hdwy Stg 2	-	-	-	-	5.82	-
Follow-up Hdwy	-	-	2.22	-	3.51	3.31
Pot Cap-1 Maneuver	-	-	747	-	83	553
Stage 1	-	-	-	-	363	-
Stage 2	-	-	-	-	400	-
Platoon blocked, %	-	-		-		
Mov Cap-1 Maneuver	-	-	746	-	81	550
Mov Cap-2 Maneuver	-	-	-	-	81	-
Stage 1	-	-	-	-	362	-
Stage 2	-	-	-	-	391	-

Approach	EB	WB	NB
HCM Control Delay, s	0	0.1	35.4
HCM LOS			E

Minor Lane/Major Mvmt	NBLn1	EBT	EBR	WBL	WBT
Capacity (veh/h)	149	-	-	746	-
HCM Lane V/C Ratio	0.208	-	-	0.022	-
HCM Control Delay (s)	35.4	-	-	9.9	-
HCM Lane LOS	E	-	-	A	-
HCM 95th %tile Q(veh)	0.7	-	-	0.1	-

Intersection	
Int Delay, s/veh	0.3

Movement	EBT	EBR	WBL	WBT	NBL	NBR
Lane Configurations						
Traffic Vol, veh/h	858	3	23	1538	4	19
Future Vol, veh/h	858	3	23	1538	4	19
Conflicting Peds, #/hr	0	3	3	0	0	0
Sign Control	Free	Free	Free	Free	Stop	Stop
RT Channelized	-	None	-	None	-	None
Storage Length	-	-	80	-	0	-
Veh in Median Storage, #	0	-	-	0	0	-
Grade, %	0	-	-	0	0	-
Peak Hour Factor	97	97	97	97	97	97
Heavy Vehicles, %	2	2	2	2	3	3
Mvmt Flow	885	3	24	1586	4	20

Major/Minor	Major1		Major2		Minor1	
Conflicting Flow All	0	0	891	0	1729	447
Stage 1	-	-	-	-	889	-
Stage 2	-	-	-	-	840	-
Critical Hdwy	-	-	4.14	-	6.86	6.96
Critical Hdwy Stg 1	-	-	-	-	5.86	-
Critical Hdwy Stg 2	-	-	-	-	5.86	-
Follow-up Hdwy	-	-	2.22	-	3.53	3.33
Pot Cap-1 Maneuver	-	-	757	-	79	556
Stage 1	-	-	-	-	359	-
Stage 2	-	-	-	-	381	-
Platoon blocked, %	-	-		-		
Mov Cap-1 Maneuver	-	-	757	-	76	554
Mov Cap-2 Maneuver	-	-	-	-	76	-
Stage 1	-	-	-	-	358	-
Stage 2	-	-	-	-	369	-

Approach	EB	WB	NB
HCM Control Delay, s	0	0.1	19.9
HCM LOS			C

Minor Lane/Major Mvmt	NBLn1	EBT	EBR	WBL	WBT
Capacity (veh/h)	265	-	-	757	-
HCM Lane V/C Ratio	0.089	-	-	0.031	-
HCM Control Delay (s)	19.9	-	-	9.9	-
HCM Lane LOS	C	-	-	A	-
HCM 95th %tile Q(veh)	0.3	-	-	0.1	-

Intersection	
Int Delay, s/veh	0.7

Movement	EBL	EBT	WBT	WBR	SBL	SBR
Lane Configurations						
Traffic Vol, veh/h	15	872	1736	4	3	54
Future Vol, veh/h	15	872	1736	4	3	54
Conflicting Peds, #/hr	1	0	0	1	0	0
Sign Control	Free	Free	Free	Free	Stop	Stop
RT Channelized	-	None	-	None	-	None
Storage Length	135	-	-	-	0	-
Veh in Median Storage, #	-	0	0	-	0	-
Grade, %	-	0	0	-	0	-
Peak Hour Factor	98	98	98	98	98	98
Heavy Vehicles, %	1	1	1	1	1	1
Mvmt Flow	15	890	1771	4	3	55

Major/Minor	Major1		Major2		Minor2	
Conflicting Flow All	1777	0	-	0	2250	889
Stage 1	-	-	-	-	1774	-
Stage 2	-	-	-	-	476	-
Critical Hdwy	4.12	-	-	-	6.82	6.92
Critical Hdwy Stg 1	-	-	-	-	5.82	-
Critical Hdwy Stg 2	-	-	-	-	5.82	-
Follow-up Hdwy	2.21	-	-	-	3.51	3.31
Pot Cap-1 Maneuver	350	-	-	-	36	288
Stage 1	-	-	-	-	123	-
Stage 2	-	-	-	-	594	-
Platoon blocked, %		-	-	-		
Mov Cap-1 Maneuver	350	-	-	-	34	288
Mov Cap-2 Maneuver	-	-	-	-	34	-
Stage 1	-	-	-	-	123	-
Stage 2	-	-	-	-	568	-

Approach	EB	WB	SB
HCM Control Delay, s	0.3	0	29.1
HCM LOS			D

Minor Lane/Major Mvmt	EBL	EBT	WBT	WBR	SBLn1
Capacity (veh/h)	350	-	-	-	207
HCM Lane V/C Ratio	0.044	-	-	-	0.281
HCM Control Delay (s)	15.8	-	-	-	29.1
HCM Lane LOS	C	-	-	-	D
HCM 95th %tile Q(veh)	0.1	-	-	-	1.1

HCM 2010 Research does not support Non-NEMA phasing.

Movement	EBT	EBR	WBL	WBT	NBL	NBR
Lane Configurations						
Traffic Volume (vph)	232	88	256	470	274	175
Future Volume (vph)	232	88	256	470	274	175
Ideal Flow (vphpl)	1900	1900	1900	1900	1900	1900
Total Lost time (s)	7.5		7.2	7.5	6.0	7.2
Lane Util. Factor	1.00		1.00	1.00	0.97	1.00
Frpb, ped/bikes	1.00		1.00	1.00	1.00	1.00
Flpb, ped/bikes	1.00		1.00	1.00	1.00	1.00
Frt	0.96		1.00	1.00	1.00	0.85
Flt Protected	1.00		0.95	1.00	0.95	1.00
Satd. Flow (prot)	1787		1787	1881	3400	1568
Flt Permitted	1.00		0.44	1.00	0.95	1.00
Satd. Flow (perm)	1787		835	1881	3400	1568
Peak-hour factor, PHF	0.91	0.91	0.91	0.91	0.91	0.91
Adj. Flow (vph)	255	97	281	516	301	192
RTOR Reduction (vph)	15	0	0	0	0	176
Lane Group Flow (vph)	337	0	281	516	301	16
Confl. Peds. (#/hr)		3	3			3
Heavy Vehicles (%)	2%	2%	1%	1%	3%	3%
Turn Type	NA		pm+pt	NA	Perm	Over
Protected Phases	6		5	2		5
Permitted Phases			2		4	
Actuated Green, G (s)	40.7		54.6	54.6	11.8	6.7
Effective Green, g (s)	40.7		54.6	54.6	11.8	6.7
Actuated g/C Ratio	0.51		0.68	0.68	0.15	0.08
Clearance Time (s)	7.5		7.2	7.5	6.0	7.2
Vehicle Extension (s)	1.0		2.0	1.0	2.5	2.0
Lane Grp Cap (vph)	910		650	1285	502	131
v/s Ratio Prot	0.19		0.04	c0.27		0.01
v/s Ratio Perm			c0.26		c0.09	
v/c Ratio	0.37		0.43	0.40	0.60	0.12
Uniform Delay, d1	11.9		5.5	5.5	31.8	33.9
Progression Factor	1.00		1.00	1.00	1.00	1.00
Incremental Delay, d2	1.2		0.2	0.9	1.6	0.2
Delay (s)	13.0		5.7	6.5	33.5	34.0
Level of Service	B		A	A	C	C
Approach Delay (s)	13.0			6.2	33.7	
Approach LOS	B			A	C	

Intersection Summary			
HCM 2000 Control Delay	15.9	HCM 2000 Level of Service	B
HCM 2000 Volume to Capacity ratio	0.51		
Actuated Cycle Length (s)	79.9	Sum of lost time (s)	20.7
Intersection Capacity Utilization	57.0%	ICU Level of Service	B
Analysis Period (min)	15		

c Critical Lane Group

Intersection	
Int Delay, s/veh	0.9

Movement	EBL	EBT	WBT	WBR	SBL	SBR
Lane Configurations						
Traffic Vol, veh/h	13	214	561	8	6	41
Future Vol, veh/h	13	214	561	8	6	41
Conflicting Peds, #/hr	0	0	0	0	0	0
Sign Control	Free	Free	Free	Free	Stop	Stop
RT Channelized	-	None	-	None	-	None
Storage Length	-	-	-	-	0	-
Veh in Median Storage, #	-	0	0	-	0	-
Grade, %	-	0	0	-	0	-
Peak Hour Factor	96	96	96	96	96	96
Heavy Vehicles, %	2	2	1	1	1	1
Mvmt Flow	14	223	584	8	6	43

Major/Minor	Major1		Major2		Minor2	
Conflicting Flow All	593	0	-	0	839	589
Stage 1	-	-	-	-	589	-
Stage 2	-	-	-	-	250	-
Critical Hdwy	4.12	-	-	-	6.41	6.21
Critical Hdwy Stg 1	-	-	-	-	5.41	-
Critical Hdwy Stg 2	-	-	-	-	5.41	-
Follow-up Hdwy	2.218	-	-	-	3.509	3.309
Pot Cap-1 Maneuver	983	-	-	-	337	510
Stage 1	-	-	-	-	556	-
Stage 2	-	-	-	-	794	-
Platoon blocked, %		-	-	-		
Mov Cap-1 Maneuver	983	-	-	-	332	510
Mov Cap-2 Maneuver	-	-	-	-	332	-
Stage 1	-	-	-	-	556	-
Stage 2	-	-	-	-	781	-

Approach	EB	WB	SB
HCM Control Delay, s	0.5	0	13.4
HCM LOS			B

Minor Lane/Major Mvmt	EBL	EBT	WBT	WBR	SBLn1
Capacity (veh/h)	983	-	-	-	477
HCM Lane V/C Ratio	0.014	-	-	-	0.103
HCM Control Delay (s)	8.7	0	-	-	13.4
HCM Lane LOS	A	A	-	-	B
HCM 95th %tile Q(veh)	0	-	-	-	0.3

Intersection	
Int Delay, s/veh	0.5

Movement	EBL	EBT	WBT	WBR	SBL	SBR
Lane Configurations						
Traffic Vol, veh/h	9	888	1657	5	6	11
Future Vol, veh/h	9	888	1657	5	6	11
Conflicting Peds, #/hr	1	0	0	1	1	0
Sign Control	Free	Free	Free	Free	Stop	Stop
RT Channelized	-	None	-	None	-	None
Storage Length	60	-	-	-	0	-
Veh in Median Storage, #	-	0	0	-	0	-
Grade, %	-	0	0	-	0	-
Peak Hour Factor	95	95	95	95	95	95
Heavy Vehicles, %	1	1	1	1	3	3
Mvmt Flow	9	935	1744	5	6	12

Major/Minor	Major1		Major2		Minor2	
Conflicting Flow All	1750	0	-	0	2235	876
Stage 1	-	-	-	-	1748	-
Stage 2	-	-	-	-	487	-
Critical Hdwy	4.12	-	-	-	6.86	6.96
Critical Hdwy Stg 1	-	-	-	-	5.86	-
Critical Hdwy Stg 2	-	-	-	-	5.86	-
Follow-up Hdwy	2.21	-	-	-	3.53	3.33
Pot Cap-1 Maneuver	359	-	-	-	36	290
Stage 1	-	-	-	-	124	-
Stage 2	-	-	-	-	581	-
Platoon blocked, %		-	-	-		
Mov Cap-1 Maneuver	359	-	-	-	35	290
Mov Cap-2 Maneuver	-	-	-	-	35	-
Stage 1	-	-	-	-	124	-
Stage 2	-	-	-	-	566	-

Approach	EB	WB	SB
HCM Control Delay, s	0.2	0	61.6
HCM LOS			F

Minor Lane/Major Mvmt	EBL	EBT	WBT	WBR	SBLn1
Capacity (veh/h)	359	-	-	-	81
HCM Lane V/C Ratio	0.026	-	-	-	0.221
HCM Control Delay (s)	15.3	-	-	-	61.6
HCM Lane LOS	C	-	-	-	F
HCM 95th %tile Q(veh)	0.1	-	-	-	0.8

Intersection	
Intersection Delay, s/veh	7.7
Intersection LOS	A

Movement	EBL	EBT	EBR	WBL	WBT	WBR	NBL	NBT	NBR	SBL	SBT	SBR
Lane Configurations												
Traffic Vol, veh/h	7	27	0	0	109	32	0	0	0	28	0	39
Future Vol, veh/h	7	27	0	0	109	32	0	0	0	28	0	39
Peak Hour Factor	0.88	0.88	0.88	0.88	0.88	0.88	0.88	0.88	0.88	0.88	0.88	0.88
Heavy Vehicles, %	1	1	1	1	1	1	1	1	1	1	1	1
Mvmt Flow	8	31	0	0	124	36	0	0	0	32	0	44
Number of Lanes	0	1	0	0	1	0	0	1	0	0	1	0

Approach	EB	WB	NB	SB
Opposing Approach	WB	EB	SB	NB
Opposing Lanes	1	1	1	1
Conflicting Approach Left	SB	NB	EB	WB
Conflicting Lanes Left	1	1	1	1
Conflicting Approach Right	NB	SB	WB	EB
Conflicting Lanes Right	1	1	1	1
HCM Control Delay	7.5	7.8	0	7.5
HCM LOS	A	A	-	A

Lane	NBLn1	EBLn1	WBLn1	SBLn1
Vol Left, %	0%	21%	0%	42%
Vol Thru, %	100%	79%	77%	0%
Vol Right, %	0%	0%	23%	58%
Sign Control	Stop	Stop	Stop	Stop
Traffic Vol by Lane	0	34	141	67
LT Vol	0	7	0	28
Through Vol	0	27	109	0
RT Vol	0	0	32	39
Lane Flow Rate	0	39	160	76
Geometry Grp	1	1	1	1
Degree of Util (X)	0	0.045	0.176	0.084
Departure Headway (Hd)	4.423	4.215	3.944	3.991
Convergence, Y/N	Yes	Yes	Yes	Yes
Cap	0	842	905	884
Service Time	2.423	2.277	1.985	2.077
HCM Lane V/C Ratio	0	0.046	0.177	0.086
HCM Control Delay	7.4	7.5	7.8	7.5
HCM Lane LOS	N	A	A	A
HCM 95th-tile Q	0	0.1	0.6	0.3

Synchro LOS and Delay – Future Condition – AM

Movement	EBL	EBT	EBR	WBL	WBT	WBR	NBL	NBT	NBR	SBL	SBT	SBR
Lane Configurations												
Traffic Volume (veh/h)	14	1994	79	23	1558	4	119	104	19	6	41	178
Future Volume (veh/h)	14	1994	79	23	1558	4	119	104	19	6	41	178
Number	1	6	16	5	2	12	7	4	14	3	8	18
Initial Q (Qb), veh	0	0	0	0	0	0	0	0	0	0	0	0
Ped-Bike Adj(A_pbT)	1.00		1.00	1.00		1.00	1.00		1.00	1.00		1.00
Parking Bus, Adj	1.00	1.00	1.00	1.00	1.00	1.00	1.00	1.00	1.00	1.00	1.00	1.00
Adj Sat Flow, veh/h/ln	1900	1863	1900	1845	1845	1900	1810	1810	1900	1863	1863	1863
Adj Flow Rate, veh/h	15	2099	83	24	1640	4	125	109	20	6	43	187
Adj No. of Lanes	0	2	0	1	2	0	1	1	0	1	1	1
Peak Hour Factor	0.95	0.95	0.95	0.95	0.95	0.95	0.95	0.95	0.95	0.95	0.95	0.95
Percent Heavy Veh, %	2	2	2	3	3	3	5	5	5	2	2	2
Cap, veh/h	28	2137	85	106	2543	6	267	331	61	242	414	351
Arrive On Green	0.64	0.64	0.64	0.03	0.71	0.71	0.22	0.22	0.22	0.22	0.22	0.22
Sat Flow, veh/h	12	3328	133	1757	3587	9	1111	1488	273	1255	1863	1579
Grp Volume(v), veh/h	1150	0	1047	24	801	843	125	0	129	6	43	187
Grp Sat Flow(s),veh/h/ln	1801	0	1672	1757	1752	1843	1111	0	1760	1255	1863	1579
Q Serve(g_s), s	59.3	0.0	107.8	0.8	44.1	44.2	18.2	0.0	11.1	0.7	3.3	18.8
Cycle Q Clear(g_c), s	113.7	0.0	107.8	0.8	44.1	44.2	21.5	0.0	11.1	11.8	3.3	18.8
Prop In Lane	0.01		0.08	1.00		0.00	1.00		0.16	1.00		1.00
Lane Grp Cap(c), veh/h	1177	0	1074	106	1242	1307	267	0	391	242	414	351
V/C Ratio(X)	0.98	0.00	0.97	0.23	0.64	0.65	0.47	0.00	0.33	0.02	0.10	0.53
Avail Cap(c_a), veh/h	1177	0	1074	106	1242	1307	267	0	391	242	414	351
HCM Platoon Ratio	1.00	1.00	1.00	1.00	1.00	1.00	1.00	1.00	1.00	1.00	1.00	1.00
Upstream Filter(I)	1.00	0.00	1.00	1.00	1.00	1.00	1.00	0.00	1.00	1.00	1.00	1.00
Uniform Delay (d), s/veh	31.0	0.0	30.8	46.1	14.0	14.1	64.3	0.0	58.7	63.7	55.7	61.8
Incr Delay (d2), s/veh	20.9	0.0	21.4	4.9	2.6	2.5	5.8	0.0	2.2	0.2	0.5	5.7
Initial Q Delay(d3),s/veh	0.0	0.0	0.0	0.0	0.0	0.0	0.0	0.0	0.0	0.0	0.0	0.0
%ile BackOfQ(50%),veh/ln	63.1	0.0	55.8	0.9	22.0	23.1	6.0	0.0	5.6	0.3	1.8	8.8
LnGrp Delay(d),s/veh	51.8	0.0	52.3	51.0	16.6	16.5	70.1	0.0	61.0	63.9	56.2	67.5
LnGrp LOS	D		D	D	B	B	E		E	E	E	E
Approach Vol, veh/h		2197			1668			254			236	
Approach Delay, s/veh		52.0			17.1			65.5			65.3	
Approach LOS		D			B			E			E	

Timer	1	2	3	4	5	6	7	8
Assigned Phs		2		4	5	6		8
Phs Duration (G+Y+Rc), s		134.0		46.0	12.0	122.0		46.0
Change Period (Y+Rc), s		6.4		6.0	6.0	6.4		6.0
Max Green Setting (Gmax), s		127.6		40.0	6.0	115.6		40.0
Max Q Clear Time (g_c+I1), s		46.2		23.5	2.8	115.7		20.8
Green Ext Time (p_c), s		27.3		1.6	0.0	0.0		1.6

Intersection Summary	
HCM 2010 Ctrl Delay	40.1
HCM 2010 LOS	D

Intersection	
Int Delay, s/veh	0.2

Movement	EBL	EBT	WBT	WBR	SBL	SBR
Lane Configurations						
Traffic Vol, veh/h	11	2122	1811	9	1	3
Future Vol, veh/h	11	2122	1811	9	1	3
Conflicting Peds, #/hr	10	0	0	0	0	0
Sign Control	Free	Free	Free	Free	Stop	Stop
RT Channelized	-	None	-	None	-	None
Storage Length	125	-	-	-	0	-
Veh in Median Storage, #	-	0	0	-	0	-
Grade, %	-	0	0	-	0	-
Peak Hour Factor	97	97	97	97	97	97
Heavy Vehicles, %	1	1	1	1	1	1
Mvmt Flow	11	2188	1867	9	1	3

Major/Minor	Major1		Major2		Minor2	
Conflicting Flow All	1886	0	-	0	2998	948
Stage 1	-	-	-	-	1882	-
Stage 2	-	-	-	-	1116	-
Critical Hdwy	4.12	-	-	-	6.82	6.92
Critical Hdwy Stg 1	-	-	-	-	5.82	-
Critical Hdwy Stg 2	-	-	-	-	5.82	-
Follow-up Hdwy	2.21	-	-	-	3.51	3.31
Pot Cap-1 Maneuver	318	-	-	-	11	263
Stage 1	-	-	-	-	107	-
Stage 2	-	-	-	-	277	-
Platoon blocked, %		-	-	-		
Mov Cap-1 Maneuver	318	-	-	-	10	260
Mov Cap-2 Maneuver	-	-	-	-	10	-
Stage 1	-	-	-	-	106	-
Stage 2	-	-	-	-	265	-

Approach	EB	WB	SB
HCM Control Delay, s	0.1	0	117.5
HCM LOS			F

Minor Lane/Major Mvmt	EBL	EBT	WBT	WBR	SBLn1
Capacity (veh/h)	318	-	-	-	36
HCM Lane V/C Ratio	0.036	-	-	-	0.115
HCM Control Delay (s)	16.7	-	-	-	117.5
HCM Lane LOS	C	-	-	-	F
HCM 95th %tile Q(veh)	0.1	-	-	-	0.4

Intersection	
Intersection Delay, s/veh	36.4
Intersection LOS	E

Movement	EBL	EBT	EBR	WBL	WBT	WBR	NBL	NBT	NBR	SBL	SBT	SBR
Lane Configurations												
Traffic Vol, veh/h	50	469	71	6	234	11	44	119	13	20	66	41
Future Vol, veh/h	50	469	71	6	234	11	44	119	13	20	66	41
Peak Hour Factor	0.93	0.93	0.93	0.93	0.93	0.93	0.93	0.93	0.93	0.93	0.93	0.93
Heavy Vehicles, %	4	4	4	2	2	2	3	3	3	6	6	6
Mvmt Flow	54	504	76	6	252	12	47	128	14	22	71	44
Number of Lanes	0	1	0	0	1	0	0	1	0	0	1	0

Approach	EB	WB	NB	SB
Opposing Approach	WB	EB	SB	NB
Opposing Lanes	1	1	1	1
Conflicting Approach Left	SB	NB	EB	WB
Conflicting Lanes Left	1	1	1	1
Conflicting Approach Right	NB	SB	WB	EB
Conflicting Lanes Right	1	1	1	1
HCM Control Delay	57.5	14.6	14	12.6
HCM LOS	F	B	B	B

Lane	NBLn1	EBLn1	WBLn1	SBLn1
Vol Left, %	25%	8%	2%	16%
Vol Thru, %	68%	79%	93%	52%
Vol Right, %	7%	12%	4%	32%
Sign Control	Stop	Stop	Stop	Stop
Traffic Vol by Lane	176	590	251	127
LT Vol	44	50	6	20
Through Vol	119	469	234	66
RT Vol	13	71	11	41
Lane Flow Rate	189	634	270	137
Geometry Grp	1	1	1	1
Degree of Util (X)	0.365	0.994	0.466	0.265
Departure Headway (Hd)	6.936	5.64	6.213	6.998
Convergence, Y/N	Yes	Yes	Yes	Yes
Cap	517	647	578	511
Service Time	5.007	3.64	4.274	5.078
HCM Lane V/C Ratio	0.366	0.98	0.467	0.268
HCM Control Delay	14	57.5	14.6	12.6
HCM Lane LOS	B	F	B	B
HCM 95th-tile Q	1.7	15.2	2.5	1.1

HCM 2010 edition methodology does not support a perm + prot left-turn type from a shared lane. Left-turn bay is needed for phases 3.

Movement	EBL	EBT	EBR	WBL	WBT	WBR	NBL	NBT	NBR	SBL	SBT	SBR
Lane Configurations												
Traffic Volume (vph)	39	2166	32	37	1656	52	81	8	65	65	6	25
Future Volume (vph)	39	2166	32	37	1656	52	81	8	65	65	6	25
Ideal Flow (vphpl)	1900	1900	1900	1900	1900	1900	1900	1900	1900	1900	1900	1900
Total Lost time (s)	6.0	6.0		6.0	6.0			6.0			6.0	6.0
Lane Util. Factor	1.00	0.95		1.00	0.95			1.00			1.00	1.00
Frpb, ped/bikes	1.00	1.00		1.00	1.00			0.99			1.00	1.00
Flpb, ped/bikes	1.00	1.00		1.00	1.00			1.00			1.00	1.00
Frt	1.00	1.00		1.00	1.00			0.94			1.00	0.85
Flt Protected	0.95	1.00		0.95	1.00			0.97			0.96	1.00
Satd. Flow (prot)	1787	3565		1770	3518			1684			1764	1568
Flt Permitted	0.07	1.00		0.03	1.00			0.80			0.56	1.00
Satd. Flow (perm)	138	3565		58	3518			1376			1040	1568
Peak-hour factor, PHF	0.98	0.98	0.98	0.98	0.98	0.98	0.98	0.98	0.98	0.98	0.98	0.98
Adj. Flow (vph)	40	2210	33	38	1690	53	83	8	66	66	6	26
RTOR Reduction (vph)	0	1	0	0	1	0	0	13	0	0	0	20
Lane Group Flow (vph)	40	2242	0	38	1742	0	0	144	0	0	72	6
Confl. Peds. (#/hr)	7		2	2		7			1	1		
Heavy Vehicles (%)	1%	1%	1%	2%	2%	2%	3%	3%	3%	3%	3%	3%
Turn Type	pm+pt	NA		pm+pt	NA		Perm	NA		pm+pt	NA	pm+ov
Protected Phases	1	6		5	2			4		3	8	1
Permitted Phases	6			2			4			8		8
Actuated Green, G (s)	143.0	132.0		137.0	129.0			20.0			32.0	43.0
Effective Green, g (s)	143.0	132.0		137.0	129.0			20.0			32.0	43.0
Actuated g/C Ratio	0.75	0.69		0.72	0.68			0.11			0.17	0.23
Clearance Time (s)	6.0	6.0		6.0	6.0			6.0			6.0	6.0
Vehicle Extension (s)	3.0	1.0		3.0	1.0			2.5			2.5	3.0
Lane Grp Cap (vph)	199	2476		113	2388			144			198	404
v/s Ratio Prot	0.01	c0.63		c0.01	0.50						c0.01	0.00
v/s Ratio Perm	0.14			0.23				c0.10			0.05	0.00
v/c Ratio	0.20	0.91		0.34	0.73			1.00			0.36	0.01
Uniform Delay, d1	17.3	23.9		39.1	19.4			85.0			70.0	57.1
Progression Factor	1.00	1.00		1.00	1.00			1.00			1.00	1.00
Incremental Delay, d2	2.3	6.1		7.9	2.0			74.2			5.1	0.1
Delay (s)	19.6	30.0		47.0	21.4			159.2			75.1	57.1
Level of Service	B	C		D	C			F			E	E
Approach Delay (s)		29.8			21.9			159.2			70.3	
Approach LOS		C			C			F			E	

Intersection Summary			
HCM 2000 Control Delay	32.2	HCM 2000 Level of Service	C
HCM 2000 Volume to Capacity ratio	0.87		
Actuated Cycle Length (s)	190.0	Sum of lost time (s)	24.0
Intersection Capacity Utilization	86.5%	ICU Level of Service	E
Analysis Period (min)	15		

c Critical Lane Group

Intersection	
Int Delay, s/veh	57.2

Movement	EBL	EBT	EBR	WBL	WBT	WBR	NBL	NBT	NBR	SBL	SBT	SBR
Lane Configurations												
Traffic Vol, veh/h	95	1990	15	11	1669	25	13	6	20	15	0	102
Future Vol, veh/h	95	1990	15	11	1669	25	13	6	20	15	0	102
Conflicting Peds, #/hr	2	0	2	2	0	2	2	0	1	1	0	2
Sign Control	Free	Free	Free	Free	Free	Free	Stop	Stop	Stop	Stop	Stop	Stop
RT Channelized	-	-	None	-	-	None	-	-	None	-	-	None
Storage Length	0	-	-	50	-	-	-	-	-	150	-	-
Veh in Median Storage, #	-	0	-	-	0	-	-	0	-	-	0	-
Grade, %	-	0	-	-	0	-	-	0	-	-	0	-
Peak Hour Factor	98	98	98	98	98	98	98	98	98	98	98	98
Heavy Vehicles, %	2	2	2	2	2	2	4	4	4	4	4	4
Mvmt Flow	97	2031	15	11	1703	26	13	6	20	15	0	104

Major/Minor	Major1			Major2			Minor1			Minor2		
Conflicting Flow All	1731	0	0	2048	0	0	3110	3987	1026	2953	3982	868
Stage 1	-	-	-	-	-	-	2234	2234	-	1740	1740	-
Stage 2	-	-	-	-	-	-	876	1753	-	1213	2242	-
Critical Hdwy	4.14	-	-	4.14	-	-	7.58	6.58	6.98	7.58	6.58	6.98
Critical Hdwy Stg 1	-	-	-	-	-	-	6.58	5.58	-	6.58	5.58	-
Critical Hdwy Stg 2	-	-	-	-	-	-	6.58	5.58	-	6.58	5.58	-
Follow-up Hdwy	2.22	-	-	2.22	-	-	3.54	4.04	3.34	3.54	4.04	3.34
Pot Cap-1 Maneuver	360	-	-	271	-	-	~ 5	~ 3	229	~ 6	3	292
Stage 1	-	-	-	-	-	-	42	76	-	88	137	-
Stage 2	-	-	-	-	-	-	306	135	-	190	76	-
Platoon blocked, %		-	-		-	-						
Mov Cap-1 Maneuver	359	-	-	271	-	-	~ 2	~ 2	228	-	2	291
Mov Cap-2 Maneuver	-	-	-	-	-	-	~ 2	~ 2	-	-	2	-
Stage 1	-	-	-	-	-	-	31	55	-	64	131	-
Stage 2	-	-	-	-	-	-	188	129	-	112	55	-

Approach	EB	WB	NB	SB
HCM Control Delay, s	0.8	0.1	$ 5761.7	
HCM LOS			F	-

Minor Lane/Major Mvmt	NBLn1	EBL	EBT	EBR	WBL	WBT	WBR	SBLn1	SBLn2
Capacity (veh/h)	4	359	-	-	271	-	-	-	291
HCM Lane V/C Ratio	9.949	0.27	-	-	0.041	-	-	-	0.358
HCM Control Delay (s)	$ 5761.7	18.7	-	-	18.9	-	-	-	24.1
HCM Lane LOS	F	C	-	-	C	-	-	-	C
HCM 95th %tile Q(veh)	6.7	1.1	-	-	0.1	-	-	-	1.6

Notes

~: Volume exceeds capacity $: Delay exceeds 300s +: Computation Not Defined *: All major volume in platoon

Intersection	
Intersection Delay, s/veh	8.9
Intersection LOS	A

Movement	EBL	EBT	EBR	WBL	WBT	WBR	NBL	NBT	NBR	SBL	SBT	SBR
Lane Configurations												
Traffic Vol, veh/h	23	150	19	6	137	10	31	23	11	8	10	22
Future Vol, veh/h	23	150	19	6	137	10	31	23	11	8	10	22
Peak Hour Factor	0.84	0.84	0.84	0.84	0.84	0.84	0.84	0.84	0.84	0.84	0.84	0.84
Heavy Vehicles, %	3	3	3	2	2	2	2	2	2	7	7	7
Mvmt Flow	27	179	23	7	163	12	37	27	13	10	12	26
Number of Lanes	0	1	0	0	1	0	0	1	0	0	1	0

Approach	EB	WB	NB	SB
Opposing Approach	WB	EB	SB	NB
Opposing Lanes	1	1	1	1
Conflicting Approach Left	SB	NB	EB	WB
Conflicting Lanes Left	1	1	1	1
Conflicting Approach Right	NB	SB	WB	EB
Conflicting Lanes Right	1	1	1	1
HCM Control Delay	9.2	8.8	8.5	8.1
HCM LOS	A	A	A	A

Lane	NBLn1	EBLn1	WBLn1	SBLn1
Vol Left, %	48%	12%	4%	20%
Vol Thru, %	35%	78%	90%	25%
Vol Right, %	17%	10%	7%	55%
Sign Control	Stop	Stop	Stop	Stop
Traffic Vol by Lane	65	192	153	40
LT Vol	31	23	6	8
Through Vol	23	150	137	10
RT Vol	11	19	10	22
Lane Flow Rate	77	229	182	48
Geometry Grp	1	1	1	1
Degree of Util (X)	0.106	0.281	0.225	0.063
Departure Headway (Hd)	4.909	4.42	4.456	4.753
Convergence, Y/N	Yes	Yes	Yes	Yes
Cap	729	814	805	751
Service Time	2.946	2.448	2.486	2.794
HCM Lane V/C Ratio	0.106	0.281	0.226	0.064
HCM Control Delay	8.5	9.2	8.8	8.1
HCM Lane LOS	A	A	A	A
HCM 95th-tile Q	0.4	1.2	0.9	0.2

Intersection	
Int Delay, s/veh	3.1

Movement	EBL	EBT	EBR	WBL	WBT	WBR	NBL	NBT	NBR	SBL	SBT	SBR
Lane Configurations												
Traffic Vol, veh/h	8	150	19	6	137	10	31	23	11	8	10	22
Future Vol, veh/h	8	150	19	6	137	10	31	23	11	8	10	22
Conflicting Peds, #/hr	2	0	1	1	0	2	2	0	1	1	0	2
Sign Control	Free	Free	Free	Free	Free	Free	Stop	Stop	Stop	Stop	Stop	Stop
RT Channelized	-	-	None	-	-	None	-	-	None	-	-	None
Storage Length	-	-	-	-	-	-	-	-	-	-	-	-
Veh in Median Storage, #	-	0	-	-	0	-	-	0	-	-	0	-
Grade, %	-	0	-	-	0	-	-	0	-	-	0	-
Peak Hour Factor	86	86	86	86	86	86	86	86	86	86	86	86
Heavy Vehicles, %	1	1	1	2	2	2	3	3	3	2	2	2
Mvmt Flow	9	174	22	7	159	12	36	27	13	9	12	26

Major/Minor	Major1			Major2			Minor1			Minor2		
Conflicting Flow All	173	0	0	198	0	0	405	392	187	406	397	169
Stage 1	-	-	-	-	-	-	205	205	-	181	181	-
Stage 2	-	-	-	-	-	-	200	187	-	225	216	-
Critical Hdwy	4.11	-	-	4.12	-	-	7.13	6.53	6.23	7.12	6.52	6.22
Critical Hdwy Stg 1	-	-	-	-	-	-	6.13	5.53	-	6.12	5.52	-
Critical Hdwy Stg 2	-	-	-	-	-	-	6.13	5.53	-	6.12	5.52	-
Follow-up Hdwy	2.209	-	-	2.218	-	-	3.527	4.027	3.327	3.518	4.018	3.318
Pot Cap-1 Maneuver	1410	-	-	1375	-	-	554	542	852	555	540	875
Stage 1	-	-	-	-	-	-	795	730	-	821	750	-
Stage 2	-	-	-	-	-	-	800	743	-	778	724	-
Platoon blocked, %		-	-		-	-						
Mov Cap-1 Maneuver	1407	-	-	1374	-	-	522	533	850	519	531	872
Mov Cap-2 Maneuver	-	-	-	-	-	-	522	533	-	519	531	-
Stage 1	-	-	-	-	-	-	789	724	-	814	744	-
Stage 2	-	-	-	-	-	-	758	737	-	732	718	-

Approach	EB	WB	NB	SB
HCM Control Delay, s	0.3	0.3	12.4	10.7
HCM LOS			B	B

Minor Lane/Major Mvmt	NBLn1	EBL	EBT	EBR	WBL	WBT	WBR	SBLn1
Capacity (veh/h)	563	1407	-	-	1374	-	-	673
HCM Lane V/C Ratio	0.134	0.007	-	-	0.005	-	-	0.069
HCM Control Delay (s)	12.4	7.6	0	-	7.6	0	-	10.7
HCM Lane LOS	B	A	A	-	A	A	-	B
HCM 95th %tile Q(veh)	0.5	0	-	-	0	-	-	0.2

Movement	EBL	EBT	EBR	WBL	WBT	WBR	NBL	NBT	NBR	SBL	SBT	SBR
Lane Configurations												
Traffic Volume (veh/h)	14	412	10	69	281	28	14	72	168	25	37	8
Future Volume (veh/h)	14	412	10	69	281	28	14	72	168	25	37	8
Number	5	2	12	1	6	16	7	4	14	3	8	18
Initial Q (Qb), veh	0	0	0	0	0	0	0	0	0	0	0	0
Ped-Bike Adj(A_pbT)	1.00		1.00	1.00		1.00	1.00		1.00	1.00		1.00
Parking Bus, Adj	1.00	1.00	1.00	1.00	1.00	1.00	1.00	1.00	1.00	1.00	1.00	1.00
Adj Sat Flow, veh/h/ln	1900	1881	1900	1900	1881	1900	1900	1863	1900	1900	1863	1900
Adj Flow Rate, veh/h	15	429	10	72	293	29	15	75	175	26	39	8
Adj No. of Lanes	0	1	0	0	1	0	0	1	0	0	1	0
Peak Hour Factor	0.96	0.96	0.96	0.96	0.96	0.96	0.96	0.96	0.96	0.96	0.96	0.96
Percent Heavy Veh, %	1	1	1	1	1	1	2	2	2	2	2	2
Cap, veh/h	76	1064	24	201	777	72	73	106	223	163	214	36
Arrive On Green	0.59	0.59	0.59	0.59	0.59	0.59	0.20	0.20	0.20	0.20	0.20	0.20
Sat Flow, veh/h	22	1795	41	217	1310	121	43	519	1092	396	1047	178
Grp Volume(v), veh/h	454	0	0	394	0	0	265	0	0	73	0	0
Grp Sat Flow(s),veh/h/ln	1857	0	0	1649	0	0	1654	0	0	1620	0	0
Q Serve(g_s), s	0.0	0.0	0.0	0.0	0.0	0.0	2.5	0.0	0.0	0.0	0.0	0.0
Cycle Q Clear(g_c), s	7.7	0.0	0.0	6.5	0.0	0.0	8.9	0.0	0.0	2.0	0.0	0.0
Prop In Lane	0.03		0.02	0.18		0.07	0.06		0.66	0.36		0.11
Lane Grp Cap(c), veh/h	1164	0	0	1049	0	0	402	0	0	413	0	0
V/C Ratio(X)	0.39	0.00	0.00	0.38	0.00	0.00	0.66	0.00	0.00	0.18	0.00	0.00
Avail Cap(c_a), veh/h	1164	0	0	1049	0	0	622	0	0	614	0	0
HCM Platoon Ratio	1.00	1.00	1.00	1.00	1.00	1.00	1.00	1.00	1.00	1.00	1.00	1.00
Upstream Filter(I)	1.00	0.00	0.00	1.00	0.00	0.00	1.00	0.00	0.00	1.00	0.00	0.00
Uniform Delay (d), s/veh	6.5	0.0	0.0	6.2	0.0	0.0	22.2	0.0	0.0	19.5	0.0	0.0
Incr Delay (d2), s/veh	1.0	0.0	0.0	0.1	0.0	0.0	1.4	0.0	0.0	0.1	0.0	0.0
Initial Q Delay(d3),s/veh	0.0	0.0	0.0	0.0	0.0	0.0	0.0	0.0	0.0	0.0	0.0	0.0
%ile BackOfQ(50%),veh/ln	4.2	0.0	0.0	3.3	0.0	0.0	4.2	0.0	0.0	1.0	0.0	0.0
LnGrp Delay(d),s/veh	7.4	0.0	0.0	6.3	0.0	0.0	23.6	0.0	0.0	19.6	0.0	0.0
LnGrp LOS	A			A			C			B		
Approach Vol, veh/h		454			394			265			73	
Approach Delay, s/veh		7.4			6.3			23.6			19.6	
Approach LOS		A			A			C			B	

Timer	1	2	3	4	5	6	7	8
Assigned Phs		2		4		6		8
Phs Duration (G+Y+Rc), s		41.0		18.0		41.0		18.0
Change Period (Y+Rc), s		6.0		6.0		6.0		6.0
Max Green Setting (Gmax), s		35.0		20.0		35.0		20.0
Max Q Clear Time (g_c+I1), s		9.7		10.9		8.5		4.0
Green Ext Time (p_c), s		2.1		1.2		2.1		1.6

Intersection Summary	
HCM 2010 Ctrl Delay	11.4
HCM 2010 LOS	B

HCM 2010 methodology does not support clustered intersections.

Movement	EBL	EBT	EBR	WBL	WBT	WBR	NBL	NBT	NBR	SBL	SBT	SBR
Lane Configurations												
Traffic Volume (vph)	5	1953	3	17	1420	32	5	0	0	10	0	23
Future Volume (vph)	5	1953	3	17	1420	32	5	0	0	10	0	23
Ideal Flow (vphpl)	1900	1900	1900	1900	1900	1900	1900	1900	1900	1900	1900	1900
Total Lost time (s)	6.0	6.4			6.4	6.4		6.0			5.7	
Lane Util. Factor	1.00	0.95			0.91	1.00		1.00			1.00	
Frpb, ped/bikes	1.00	1.00			1.00	0.91		1.00			1.00	
Flpb, ped/bikes	1.00	1.00			1.00	1.00		1.00			0.99	
Frt	1.00	1.00			1.00	0.85		1.00			0.90	
Flt Protected	0.95	1.00			1.00	1.00		0.95			0.99	
Satd. Flow (prot)	1770	3538			5082	1447		1736			1652	
Flt Permitted	0.95	1.00			0.82	1.00		0.76			0.90	
Satd. Flow (perm)	1770	3538			4170	1447		1390			1507	
Peak-hour factor, PHF	0.96	0.96	0.96	0.96	0.96	0.92	0.96	0.96	0.96	0.96	0.96	0.96
Adj. Flow (vph)	5	2034	3	18	1479	35	5	0	0	10	0	24
RTOR Reduction (vph)	0	0	0	0	0	11	0	0	0	0	33	0
Lane Group Flow (vph)	5	2037	0	0	1497	24	0	5	0	0	1	0
Confl. Peds. (#/hr)	12		1	1		12			2	2		
Heavy Vehicles (%)	2%	2%	2%	2%	2%	2%	4%	4%	4%	2%	2%	2%
Turn Type	Prot	NA		Prot	NA	Perm	Perm	NA		Perm	NA	
Protected Phases	1 13	6 13		5 8!	2 8!			3!			7	
Permitted Phases						2 8	3!			7		
Actuated Green, G (s)	32.2	108.0			123.4	123.4		33.0			6.3	
Effective Green, g (s)	32.2	108.0			123.4	123.4		33.0			6.3	
Actuated g/C Ratio	0.18	0.60			0.69	0.69		0.18			0.03	
Clearance Time (s)								6.0			5.7	
Vehicle Extension (s)								2.5			2.0	
Lane Grp Cap (vph)	316	2122			3103	991		254			52	
v/s Ratio Prot	0.00	c0.58			c0.13							
v/s Ratio Perm					0.20	0.02		c0.00			0.00	
v/c Ratio	0.02	0.96			0.48	0.02		0.02			0.02	
Uniform Delay, d1	60.9	34.0			13.3	9.0		60.2			83.9	
Progression Factor	1.00	1.00			1.00	1.00		1.00			1.00	
Incremental Delay, d2	0.0	11.4			0.0	0.0		0.1			0.8	
Delay (s)	60.9	45.3			13.3	9.1		60.4			84.7	
Level of Service	E	D			B	A		E			F	
Approach Delay (s)		45.3			13.2			60.4			84.7	
Approach LOS		D			B			E			F	

Intersection Summary			
HCM 2000 Control Delay	32.1	HCM 2000 Level of Service	C
HCM 2000 Volume to Capacity ratio	0.86		
Actuated Cycle Length (s)	180.0	Sum of lost time (s)	30.5
Intersection Capacity Utilization	88.9%	ICU Level of Service	E
Analysis Period (min)	15		

! Phase conflict between lane groups.
c Critical Lane Group

Intersection	
Int Delay, s/veh	0.7

Movement	EBL	EBT	EBR	WBL	WBT	WBR	NBL	NBT	NBR	SBL	SBT	SBR
Lane Configurations												
Traffic Vol, veh/h	44	1934	93	13	1314	79	38	17	32	11	8	64
Future Vol, veh/h	44	1934	93	13	1314	79	38	17	32	11	8	64
Conflicting Peds, #/hr	3	0	0	0	0	3	2	0	2	2	0	2
Sign Control	Free	Free	Free	Free	Free	Free	Stop	Stop	Stop	Stop	Stop	Stop
RT Channelized	-	-	None	-	-	None	-	-	None	-	-	None
Storage Length	-	-	80	-	-	100	-	-	-	-	-	-
Veh in Median Storage, #	-	0	-	-	0	-	-	0	-	-	0	-
Grade, %	-	0	-	-	0	-	-	0	-	-	0	-
Peak Hour Factor	97	97	97	97	97	97	97	97	97	97	97	97
Heavy Vehicles, %	2	2	2	2	2	2	1	1	1	1	1	1
Mvmt Flow	45	1994	96	13	1355	81	39	18	33	11	8	66

Major/Minor	Major1			Major2			Minor1			Minor2		
Conflicting Flow All	1358	0	0	1994	0	0	2795	3469	999	2482	3469	682
Stage 1	-	-	-	-	-	-	2085	2085	-	1384	1384	-
Stage 2	-	-	-	-	-	-	710	1384	-	1098	2085	-
Critical Hdwy	4.14	-	-	4.14	-	-	7.52	6.52	6.92	7.52	6.52	6.92
Critical Hdwy Stg 1	-	-	-	-	-	-	6.52	5.52	-	6.52	5.52	-
Critical Hdwy Stg 2	-	-	-	-	-	-	6.52	5.52	-	6.52	5.52	-
Follow-up Hdwy	2.22	-	-	2.22	-	-	3.51	4.01	3.31	3.51	4.01	3.31
Pot Cap-1 Maneuver	502	-	-	284	-	-	~ 9	~ 7	244	15	~ 7	395
Stage 1	-	-	-	-	-	-	55	95	-	152	211	-
Stage 2	-	-	-	-	-	-	393	211	-	229	95	-
Platoon blocked, %		-	-		-	-						
Mov Cap-1 Maneuver	501	-	-	283	-	-	-	~ 5	244	-	~ 5	393
Mov Cap-2 Maneuver	-	-	-	-	-	-	-	~ 5	-	-	~ 5	-
Stage 1	-	-	-	-	-	-	55	95	-	152	160	-
Stage 2	-	-	-	-	-	-	236	160	-	161	95	-

Approach	EB	WB	NB	SB
HCM Control Delay, s	0.3	1.5		
HCM LOS			-	-

Minor Lane/Major Mvmt	NBLn1	EBL	EBT	EBR	WBL	WBT	WBR	SBLn1
Capacity (veh/h)	-	501	-	-	283	-	-	-
HCM Lane V/C Ratio	-	0.091	-	-	0.047	-	-	-
HCM Control Delay (s)	-	12.9	0	-	18.4	1.4	-	-
HCM Lane LOS	-	B	A	-	C	A	-	-
HCM 95th %tile Q(veh)	-	0.3	-	-	0.1	-	-	-

Notes

~: Volume exceeds capacity $: Delay exceeds 300s +: Computation Not Defined *: All major volume in platoon

Intersection	
Int Delay, s/veh	274.2

Movement	EBL	EBT	EBR	WBL	WBT	WBR	NBL	NBT	NBR	SBL	SBT	SBR
Lane Configurations												
Traffic Vol, veh/h	10	3909	25	51	2168	10	0	0	0	3	0	6
Future Vol, veh/h	10	3909	25	51	2168	10	0	0	0	3	0	6
Conflicting Peds, #/hr	10	0	0	0	0	10	0	0	0	0	0	0
Sign Control	Free	Free	Free	Free	Free	Free	Stop	Stop	Stop	Stop	Stop	Stop
RT Channelized	-	-	None	-	-	None	-	-	None	-	-	None
Storage Length	50	-	-	-	-	-	-	-	-	0	-	90
Veh in Median Storage, #	-	0	-	-	0	-	-	0	-	-	0	-
Grade, %	-	0	-	-	0	-	-	0	-	-	0	-
Peak Hour Factor	99	99	99	99	99	99	99	99	99	99	92	99
Heavy Vehicles, %	2	2	2	2	2	2	2	2	2	26	2	26
Mvmt Flow	10	3948	25	52	2190	10	0	0	0	3	0	6

Major/Minor	Major1			Major2			Minor1			Minor2		
Conflicting Flow All	2210	0	0	3974	0	0	4960	6294	1987	3908	-	1110
Stage 1	-	-	-	-	-	-	3981	3981	-	2308	-	-
Stage 2	-	-	-	-	-	-	979	2313	-	1600	-	-
Critical Hdwy	5.34	-	-	5.34	-	-	6.44	6.54	7.14	6.92	-	7.62
Critical Hdwy Stg 1	-	-	-	-	-	-	7.34	5.54	-	7.82	-	-
Critical Hdwy Stg 2	-	-	-	-	-	-	6.74	5.54	-	7.22	-	-
Follow-up Hdwy	3.12	-	-	3.12	-	-	3.82	4.02	3.92	4.06	-	4.16
Pot Cap-1 Maneuver	98	-	-	~ 11	-	-	1	0	44	~ 2	0	147
Stage 1	-	-	-	-	-	-	1	9	-	17	0	-
Stage 2	-	-	-	-	-	-	242	71	-	77	0	-
Platoon blocked, %		-	-		-	-						
Mov Cap-1 Maneuver	98	-	-	~ 11	-	-	-	0	44	-	-	146
Mov Cap-2 Maneuver	-	-	-	-	-	-	-	0	-	-	-	-
Stage 1	-	-	-	-	-	-	1	8	-	15	-	-
Stage 2	-	-	-	-	-	-	-	0	-	69	-	-

Approach	EB	WB	NB	SB
HCM Control Delay, s	0.1	$ 760.3	0	
HCM LOS			A	-

Minor Lane/Major Mvmt	NBLn1	EBL	EBT	EBR	WBL	WBT	WBR	SBLn1	SBLn2
Capacity (veh/h)	-	98	-	-	~ 11	-	-	-	146
HCM Lane V/C Ratio	-	0.103	-	-	4.683	-	-	-	0.042
HCM Control Delay (s)	0	45.9	-	-	$ 2334.2	$ 726.8	-	-	30.7
HCM Lane LOS	A	E	-	-	F	F	-	-	D
HCM 95th %tile Q(veh)	-	0.3	-	-	7.6	-	-	-	0.1

Notes

~: Volume exceeds capacity $: Delay exceeds 300s +: Computation Not Defined *: All major volume in platoon

Intersection	
Int Delay, s/veh	46

Movement	EBL	EBT	EBR	WBL	WBT	WBR	NBL	NBT	NBR	SBL	SBT	SBR
Lane Configurations												
Traffic Vol, veh/h	203	3353	103	14	2438	25	0	0	64	0	0	112
Future Vol, veh/h	203	3353	103	14	2438	25	0	0	64	0	0	112
Conflicting Peds, #/hr	0	0	1	1	0	0	2	0	0	0	0	2
Sign Control	Free	Free	Free	Free	Free	Free	Stop	Stop	Stop	Stop	Stop	Stop
RT Channelized	-	-	None	-	-	None	-	-	None	-	-	None
Storage Length	0	-	-	120	-	-	-	-	0	-	-	0
Veh in Median Storage, #	-	0	-	-	0	-	-	0	-	-	0	-
Grade, %	-	0	-	-	0	-	-	0	-	-	0	-
Peak Hour Factor	95	95	95	95	95	95	95	95	95	95	95	95
Heavy Vehicles, %	2	2	2	2	2	2	2	2	2	2	2	2
Mvmt Flow	214	3529	108	15	2566	26	0	0	67	0	0	118

Major/Minor	Major1			Major2			Minor1			Minor2		
Conflicting Flow All	2593	0	0	3639	0	0	-	-	1820	-	-	1298
Stage 1	-	-	-	-	-	-	-	-	-	-	-	-
Stage 2	-	-	-	-	-	-	-	-	-	-	-	-
Critical Hdwy	5.34	-	-	5.34	-	-	-	-	7.14	-	-	7.14
Critical Hdwy Stg 1	-	-	-	-	-	-	-	-	-	-	-	-
Critical Hdwy Stg 2	-	-	-	-	-	-	-	-	-	-	-	-
Follow-up Hdwy	3.12	-	-	3.12	-	-	-	-	3.92	-	-	3.92
Pot Cap-1 Maneuver	~ 62	-	-	17	-	-	0	0	~ 57	0	0	131
Stage 1	-	-	-	-	-	-	0	0	-	0	0	-
Stage 2	-	-	-	-	-	-	0	0	-	0	0	-
Platoon blocked, %		-	-		-	-						
Mov Cap-1 Maneuver	~ 62	-	-	17	-	-	-	-	~ 57	-	-	131
Mov Cap-2 Maneuver	-	-	-	-	-	-	-	-	-	-	-	-
Stage 1	-	-	-	-	-	-	-	-	-	-	-	-
Stage 2	-	-	-	-	-	-	-	-	-	-	-	-

Approach	EB	WB	NB	SB
HCM Control Delay, s	68.8	2.7	296.9	117.8
HCM LOS			F	F

Minor Lane/Major Mvmt	NBLn1	EBL	EBT	EBR	WBL	WBT	WBR	SBLn1
Capacity (veh/h)	57	~ 62	-	-	17	-	-	131
HCM Lane V/C Ratio	1.182	3.447	-	-	0.867	-	-	0.9
HCM Control Delay (s)	296.9	$ 1240.5	-	-	$ 475.8	-	-	117.8
HCM Lane LOS	F	F	-	-	F	-	-	F
HCM 95th %tile Q(veh)	5.7	22.5	-	-	2.2	-	-	5.9

Notes

~: Volume exceeds capacity $: Delay exceeds 300s +: Computation Not Defined *: All major volume in platoon

Intersection	
Int Delay, s/veh	62.4

Movement	EBT	EBR	WBL	WBT	NBL	NBR
Lane Configurations						
Traffic Vol, veh/h	1810	193	84	993	38	38
Future Vol, veh/h	1810	193	84	993	38	38
Conflicting Peds, #/hr	0	3	3	0	0	0
Sign Control	Free	Free	Free	Free	Stop	Stop
RT Channelized	-	None	-	None	-	None
Storage Length	-	-	80	-	0	-
Veh in Median Storage, #	0	-	-	0	0	-
Grade, %	0	-	-	0	0	-
Peak Hour Factor	91	91	91	91	91	91
Heavy Vehicles, %	2	2	2	2	1	1
Mvmt Flow	1989	212	92	1091	42	42

Major/Minor	Major1		Major2		Minor1	
Conflicting Flow All	0	0	2204	0	2828	1104
Stage 1	-	-	-	-	2098	-
Stage 2	-	-	-	-	730	-
Critical Hdwy	-	-	4.14	-	6.82	6.92
Critical Hdwy Stg 1	-	-	-	-	5.82	-
Critical Hdwy Stg 2	-	-	-	-	5.82	-
Follow-up Hdwy	-	-	2.22	-	3.51	3.31
Pot Cap-1 Maneuver	-	-	235	-	~ 14	207
Stage 1	-	-	-	-	81	-
Stage 2	-	-	-	-	440	-
Platoon blocked, %	-	-		-		
Mov Cap-1 Maneuver	-	-	235	-	~ 8	206
Mov Cap-2 Maneuver	-	-	-	-	~ 8	-
Stage 1	-	-	-	-	81	-
Stage 2	-	-	-	-	268	-

Approach	EB	WB	NB
HCM Control Delay, s	0	2.3	$ 2560.2
HCM LOS			F

Minor Lane/Major Mvmt	NBLn1	EBT	EBR	WBL	WBT
Capacity (veh/h)	15	-	-	235	-
HCM Lane V/C Ratio	5.568	-	-	0.393	-
HCM Control Delay (s)	$ 2560.2	-	-	29.9	-
HCM Lane LOS	F	-	-	D	-
HCM 95th %tile Q(veh)	11.3	-	-	1.8	-

Notes

~: Volume exceeds capacity $: Delay exceeds 300s +: Computation Not Defined *: All major volume in platoon

Intersection	
Int Delay, s/veh	2.7

Movement	EBT	EBR	WBL	WBT	NBL	NBR
Lane Configurations						
Traffic Vol, veh/h	2008	94	34	913	5	52
Future Vol, veh/h	2008	94	34	913	5	52
Conflicting Peds, #/hr	0	2	2	0	0	0
Sign Control	Free	Free	Free	Free	Stop	Stop
RT Channelized	-	None	-	None	-	None
Storage Length	-	-	80	-	0	-
Veh in Median Storage, #	0	-	-	0	0	-
Grade, %	0	-	-	0	0	-
Peak Hour Factor	91	91	91	91	91	91
Heavy Vehicles, %	2	2	2	2	3	3
Mvmt Flow	2207	103	37	1003	5	57

Major/Minor	Major1		Major2		Minor1	
Conflicting Flow All	0	0	2312	0	2836	1157
Stage 1	-	-	-	-	2260	-
Stage 2	-	-	-	-	576	-
Critical Hdwy	-	-	4.14	-	6.86	6.96
Critical Hdwy Stg 1	-	-	-	-	5.86	-
Critical Hdwy Stg 2	-	-	-	-	5.86	-
Follow-up Hdwy	-	-	2.22	-	3.53	3.33
Pot Cap-1 Maneuver	-	-	213	-	14	188
Stage 1	-	-	-	-	64	-
Stage 2	-	-	-	-	523	-
Platoon blocked, %	-	-		-		
Mov Cap-1 Maneuver	-	-	213	-	12	188
Mov Cap-2 Maneuver	-	-	-	-	12	-
Stage 1	-	-	-	-	64	-
Stage 2	-	-	-	-	432	-

Approach	EB	WB	NB
HCM Control Delay, s	0	0.9	129.6
HCM LOS			F

Minor Lane/Major Mvmt	NBLn1	EBT	EBR	WBL	WBT
Capacity (veh/h)	82	-	-	213	-
HCM Lane V/C Ratio	0.764	-	-	0.175	-
HCM Control Delay (s)	129.6	-	-	25.5	-
HCM Lane LOS	F	-	-	D	-
HCM 95th %tile Q(veh)	3.8	-	-	0.6	-

Intersection	
Int Delay, s/veh	0.2

Movement	EBL	EBT	WBT	WBR	SBL	SBR
Lane Configurations						
Traffic Vol, veh/h	11	2152	741	6	4	17
Future Vol, veh/h	11	2152	741	6	4	17
Conflicting Peds, #/hr	2	0	0	2	0	0
Sign Control	Free	Free	Free	Free	Stop	Stop
RT Channelized	-	None	-	None	-	None
Storage Length	135	-	-	-	0	-
Veh in Median Storage, #	-	0	0	-	0	-
Grade, %	-	0	0	-	0	-
Peak Hour Factor	97	97	97	97	97	97
Heavy Vehicles, %	1	1	1	1	1	1
Mvmt Flow	11	2219	764	6	4	18

Major/Minor	Major1		Major2		Minor2	
Conflicting Flow All	772	0	-	0	1901	387
Stage 1	-	-	-	-	769	-
Stage 2	-	-	-	-	1132	-
Critical Hdwy	4.12	-	-	-	6.82	6.92
Critical Hdwy Stg 1	-	-	-	-	5.82	-
Critical Hdwy Stg 2	-	-	-	-	5.82	-
Follow-up Hdwy	2.21	-	-	-	3.51	3.31
Pot Cap-1 Maneuver	845	-	-	-	62	614
Stage 1	-	-	-	-	420	-
Stage 2	-	-	-	-	272	-
Platoon blocked, %		-	-	-		
Mov Cap-1 Maneuver	845	-	-	-	61	613
Mov Cap-2 Maneuver	-	-	-	-	61	-
Stage 1	-	-	-	-	419	-
Stage 2	-	-	-	-	268	-

Approach	EB	WB	SB
HCM Control Delay, s	0	0	22.7
HCM LOS			C

Minor Lane/Major Mvmt	EBL	EBT	WBT	WBR	SBLn1
Capacity (veh/h)	845	-	-	-	225
HCM Lane V/C Ratio	0.013	-	-	-	0.096
HCM Control Delay (s)	9.3	-	-	-	22.7
HCM Lane LOS	A	-	-	-	C
HCM 95th %tile Q(veh)	0	-	-	-	0.3

HCM 2010 Research does not support Non-NEMA phasing.

Movement	EBT	EBR	WBL	WBT	NBL	NBR
Lane Configurations						
Traffic Volume (vph)	686	19	56	231	113	536
Future Volume (vph)	686	19	56	231	113	536
Ideal Flow (vphpl)	1900	1900	1900	1900	1900	1900
Total Lost time (s)	7.5		7.2	7.5	6.0	7.2
Lane Util. Factor	1.00		1.00	1.00	0.97	1.00
Frpb, ped/bikes	1.00		1.00	1.00	1.00	1.00
Flpb, ped/bikes	1.00		1.00	1.00	1.00	1.00
Frt	1.00		1.00	1.00	1.00	0.85
Flt Protected	1.00		0.95	1.00	0.95	1.00
Satd. Flow (prot)	1855		1787	1881	3400	1568
Flt Permitted	1.00		0.20	1.00	0.95	1.00
Satd. Flow (perm)	1855		380	1881	3400	1568
Peak-hour factor, PHF	0.96	0.96	0.96	0.96	0.96	0.96
Adj. Flow (vph)	715	20	58	241	118	558
RTOR Reduction (vph)	1	0	0	0	0	397
Lane Group Flow (vph)	734	0	58	241	118	161
Confl. Peds. (#/hr)		1	1			6
Heavy Vehicles (%)	2%	2%	1%	1%	3%	3%
Turn Type	NA		pm+pt	NA	Perm	Over
Protected Phases	6		5	2		5
Permitted Phases			2		4	
Actuated Green, G (s)	40.9		54.9	54.9	6.2	6.8
Effective Green, g (s)	40.9		54.9	54.9	6.2	6.8
Actuated g/C Ratio	0.55		0.74	0.74	0.08	0.09
Clearance Time (s)	7.5		7.2	7.5	6.0	7.2
Vehicle Extension (s)	1.0		2.0	1.0	2.5	2.0
Lane Grp Cap (vph)	1017		407	1384	282	142
v/s Ratio Prot	c0.40		0.01	0.13		c0.10
v/s Ratio Perm			0.09		c0.03	
v/c Ratio	0.72		0.14	0.17	0.42	1.13
Uniform Delay, d1	12.6		6.5	3.0	32.5	33.9
Progression Factor	1.00		1.00	1.00	1.00	1.00
Incremental Delay, d2	4.4		0.1	0.3	0.7	115.6
Delay (s)	17.0		6.6	3.3	33.2	149.5
Level of Service	B		A	A	C	F
Approach Delay (s)	17.0			3.9	129.2	
Approach LOS	B			A	F	

Intersection Summary			
HCM 2000 Control Delay	59.1	HCM 2000 Level of Service	E
HCM 2000 Volume to Capacity ratio	0.74		
Actuated Cycle Length (s)	74.6	Sum of lost time (s)	20.7
Intersection Capacity Utilization	83.3%	ICU Level of Service	E
Analysis Period (min)	15		

c Critical Lane Group

Intersection	
Int Delay, s/veh	0.8

Movement	EBL	EBT	WBT	WBR	SBL	SBR
Lane Configurations						
Traffic Vol, veh/h	18	559	337	11	11	39
Future Vol, veh/h	18	559	337	11	11	39
Conflicting Peds, #/hr	2	0	0	2	0	0
Sign Control	Free	Free	Free	Free	Stop	Stop
RT Channelized	-	None	-	None	-	None
Storage Length	-	-	-	-	0	-
Veh in Median Storage, #	-	0	0	-	0	-
Grade, %	-	0	0	-	0	-
Peak Hour Factor	95	95	95	95	95	95
Heavy Vehicles, %	2	2	1	1	1	1
Mvmt Flow	19	588	355	12	12	41

Major/Minor	Major1		Major2		Minor2	
Conflicting Flow All	368	0	-	0	989	363
Stage 1	-	-	-	-	363	-
Stage 2	-	-	-	-	626	-
Critical Hdwy	4.12	-	-	-	6.41	6.21
Critical Hdwy Stg 1	-	-	-	-	5.41	-
Critical Hdwy Stg 2	-	-	-	-	5.41	-
Follow-up Hdwy	2.218	-	-	-	3.509	3.309
Pot Cap-1 Maneuver	1191	-	-	-	275	684
Stage 1	-	-	-	-	706	-
Stage 2	-	-	-	-	535	-
Platoon blocked, %		-	-	-		
Mov Cap-1 Maneuver	1191	-	-	-	267	683
Mov Cap-2 Maneuver	-	-	-	-	267	-
Stage 1	-	-	-	-	705	-
Stage 2	-	-	-	-	521	-

Approach	EB	WB	SB
HCM Control Delay, s	0.3	0	12.9
HCM LOS			B

Minor Lane/Major Mvmt	EBL	EBT	WBT	WBR	SBLn1
Capacity (veh/h)	1191	-	-	-	509
HCM Lane V/C Ratio	0.016	-	-	-	0.103
HCM Control Delay (s)	8.1	0	-	-	12.9
HCM Lane LOS	A	A	-	-	B
HCM 95th %tile Q(veh)	0	-	-	-	0.3

Intersection	
Int Delay, s/veh	0.2

Movement	EBL	EBT	WBT	WBR	SBL	SBR
Lane Configurations						
Traffic Vol, veh/h	5	2197	696	3	5	6
Future Vol, veh/h	5	2197	696	3	5	6
Conflicting Peds, #/hr	3	0	0	3	0	0
Sign Control	Free	Free	Free	Free	Stop	Stop
RT Channelized	-	None	-	None	-	None
Storage Length	60	-	-	-	0	-
Veh in Median Storage, #	-	0	0	-	0	-
Grade, %	-	0	0	-	0	-
Peak Hour Factor	93	93	93	93	93	93
Heavy Vehicles, %	1	1	1	1	3	3
Mvmt Flow	5	2362	748	3	5	6

Major/Minor	Major1		Major2		Minor2	
Conflicting Flow All	755	0	-	0	1945	379
Stage 1	-	-	-	-	753	-
Stage 2	-	-	-	-	1192	-
Critical Hdwy	4.12	-	-	-	6.86	6.96
Critical Hdwy Stg 1	-	-	-	-	5.86	-
Critical Hdwy Stg 2	-	-	-	-	5.86	-
Follow-up Hdwy	2.21	-	-	-	3.53	3.33
Pot Cap-1 Maneuver	858	-	-	-	56	616
Stage 1	-	-	-	-	423	-
Stage 2	-	-	-	-	248	-
Platoon blocked, %		-	-	-		
Mov Cap-1 Maneuver	858	-	-	-	55	614
Mov Cap-2 Maneuver	-	-	-	-	55	-
Stage 1	-	-	-	-	422	-
Stage 2	-	-	-	-	246	-

Approach	EB	WB	SB
HCM Control Delay, s	0	0	42
HCM LOS			E

Minor Lane/Major Mvmt	EBL	EBT	WBT	WBR	SBLn1
Capacity (veh/h)	858	-	-	-	109
HCM Lane V/C Ratio	0.006	-	-	-	0.109
HCM Control Delay (s)	9.2	-	-	-	42
HCM Lane LOS	A	-	-	-	E
HCM 95th %tile Q(veh)	0	-	-	-	0.4

Intersection	
Intersection Delay, s/veh	13.3
Intersection LOS	B

Movement	EBL	EBT	EBR	WBL	WBT	WBR	NBL	NBT	NBR	SBL	SBT	SBR
Lane Configurations												
Traffic Vol, veh/h	27	151	33	0	1	0	1	3	0	325	38	13
Future Vol, veh/h	27	151	33	0	1	0	1	3	0	325	38	13
Peak Hour Factor	0.82	0.82	0.82	0.82	0.82	0.82	0.82	0.82	0.82	0.82	0.82	0.82
Heavy Vehicles, %	1	1	1	1	1	1	1	1	1	1	1	1
Mvmt Flow	33	184	40	0	1	0	1	4	0	396	46	16
Number of Lanes	0	1	0	0	1	0	0	1	0	0	1	0

Approach	EB	WB	NB	SB
Opposing Approach	WB	EB	SB	NB
Opposing Lanes	1	1	1	1
Conflicting Approach Left	SB	NB	EB	WB
Conflicting Lanes Left	1	1	1	1
Conflicting Approach Right	NB	SB	WB	EB
Conflicting Lanes Right	1	1	1	1
HCM Control Delay	10.8	8.5	8.3	14.8
HCM LOS	B	A	A	B

Lane	NBLn1	EBLn1	WBLn1	SBLn1
Vol Left, %	25%	13%	0%	86%
Vol Thru, %	75%	72%	100%	10%
Vol Right, %	0%	16%	0%	3%
Sign Control	Stop	Stop	Stop	Stop
Traffic Vol by Lane	4	211	1	376
LT Vol	1	27	0	325
Through Vol	3	151	1	38
RT Vol	0	33	0	13
Lane Flow Rate	5	257	1	459
Geometry Grp	1	1	1	1
Degree of Util (X)	0.007	0.357	0.002	0.603
Departure Headway (Hd)	5.188	4.99	5.421	4.733
Convergence, Y/N	Yes	Yes	Yes	Yes
Cap	683	718	654	761
Service Time	3.268	3.043	3.504	2.78
HCM Lane V/C Ratio	0.007	0.358	0.002	0.603
HCM Control Delay	8.3	10.8	8.5	14.8
HCM Lane LOS	A	B	A	B
HCM 95th-tile Q	0	1.6	0	4.1

Synchro LOS and Delay – Future Condition – PM

Movement	EBL	EBT	EBR	WBL	WBT	WBR	NBL	NBT	NBR	SBL	SBT	SBR
Lane Configurations												
Traffic Volume (veh/h)	3	1823	121	48	1938	5	142	78	20	8	105	338
Future Volume (veh/h)	3	1823	121	48	1938	5	142	78	20	8	105	338
Number	1	6	16	5	2	12	7	4	14	3	8	18
Initial Q (Qb), veh	0	0	0	0	0	0	0	0	0	0	0	0
Ped-Bike Adj(A_pbT)	1.00		0.99	1.00		0.99	1.00		1.00	1.00		1.00
Parking Bus, Adj	1.00	1.00	1.00	1.00	1.00	1.00	1.00	1.00	1.00	1.00	1.00	1.00
Adj Sat Flow, veh/h/ln	1900	1863	1900	1845	1845	1900	1810	1810	1900	1863	1863	1863
Adj Flow Rate, veh/h	3	1960	130	52	2084	5	153	84	22	9	113	363
Adj No. of Lanes	0	2	0	1	2	0	1	1	0	1	1	1
Peak Hour Factor	0.93	0.93	0.93	0.93	0.93	0.93	0.93	0.93	0.93	0.93	0.93	0.93
Percent Heavy Veh, %	2	2	2	3	3	3	5	5	5	2	2	2
Cap, veh/h	21	2187	143	148	2662	6	161	261	68	214	352	298
Arrive On Green	0.66	0.66	0.66	0.04	0.74	0.74	0.19	0.19	0.19	0.19	0.19	0.19
Sat Flow, veh/h	1	3292	216	1757	3587	9	887	1382	362	1279	1863	1576
Grp Volume(v), veh/h	1096	0	997	52	1018	1071	153	0	106	9	113	363
Grp Sat Flow(s),veh/h/ln	1853	0	1655	1757	1752	1843	887	0	1744	1279	1863	1576
Q Serve(g_s), s	0.0	0.0	91.5	1.5	64.3	64.4	24.6	0.0	9.5	1.1	9.4	34.0
Cycle Q Clear(g_c), s	86.3	0.0	91.5	1.5	64.3	64.4	34.0	0.0	9.5	10.6	9.4	34.0
Prop In Lane	0.00		0.13	1.00		0.00	1.00		0.21	1.00		1.00
Lane Grp Cap(c), veh/h	1252	0	1100	148	1301	1368	161	0	329	214	352	298
V/C Ratio(X)	0.88	0.00	0.91	0.35	0.78	0.78	0.95	0.00	0.32	0.04	0.32	1.22
Avail Cap(c_a), veh/h	1252	0	1100	148	1301	1368	161	0	329	214	352	298
HCM Platoon Ratio	1.00	1.00	1.00	1.00	1.00	1.00	1.00	1.00	1.00	1.00	1.00	1.00
Upstream Filter(I)	1.00	0.00	1.00	1.00	1.00	1.00	1.00	0.00	1.00	1.00	1.00	1.00
Uniform Delay (d), s/veh	24.6	0.0	25.5	40.1	14.3	14.3	80.3	0.0	63.0	67.6	63.0	73.0
Incr Delay (d2), s/veh	6.9	0.0	10.5	6.4	4.7	4.5	58.7	0.0	2.6	0.4	2.4	125.3
Initial Q Delay(d3),s/veh	0.0	0.0	0.0	0.0	0.0	0.0	0.0	0.0	0.0	0.0	0.0	0.0
%ile BackOfQ(50%),veh/ln	46.6	0.0	44.8	2.0	32.5	34.2	10.2	0.0	4.8	0.4	5.1	25.2
LnGrp Delay(d),s/veh	31.6	0.0	36.0	46.5	19.0	18.8	139.0	0.0	65.6	68.0	65.4	198.3
LnGrp LOS	C		D	D	B	B	F		E	E	E	F
Approach Vol, veh/h		2093			2141			259			485	
Approach Delay, s/veh		33.7			19.6			109.0			164.9	
Approach LOS		C			B			F			F	

Timer	1	2	3	4	5	6	7	8
Assigned Phs		2		4	5	6		8
Phs Duration (G+Y+Rc), s		140.0		40.0	14.0	126.0		40.0
Change Period (Y+Rc), s		6.4		6.0	6.0	6.4		6.0
Max Green Setting (Gmax), s		133.6		34.0	8.0	119.6		34.0
Max Q Clear Time (g_c+I1), s		66.4		36.0	3.5	93.5		36.0
Green Ext Time (p_c), s		31.4		0.0	0.0	18.5		0.0

Intersection Summary	
HCM 2010 Ctrl Delay	44.3
HCM 2010 LOS	D

Intersection	
Int Delay, s/veh	5.4

Movement	EBL	EBT	WBT	WBR	SBL	SBR
Lane Configurations						
Traffic Vol, veh/h	22	2056	2401	15	5	20
Future Vol, veh/h	22	2056	2401	15	5	20
Conflicting Peds, #/hr	8	0	0	8	1	4
Sign Control	Free	Free	Free	Free	Stop	Stop
RT Channelized	-	None	-	None	-	None
Storage Length	125	-	-	-	0	-
Veh in Median Storage, #	-	0	0	-	0	-
Grade, %	-	0	0	-	0	-
Peak Hour Factor	97	97	97	97	97	97
Heavy Vehicles, %	1	1	1	1	1	1
Mvmt Flow	23	2120	2475	15	5	21

Major/Minor	Major1		Major2		Minor2	
Conflicting Flow All	2499	0	-	0	3597	1257
Stage 1	-	-	-	-	2491	-
Stage 2	-	-	-	-	1106	-
Critical Hdwy	4.12	-	-	-	6.82	6.92
Critical Hdwy Stg 1	-	-	-	-	5.82	-
Critical Hdwy Stg 2	-	-	-	-	5.82	-
Follow-up Hdwy	2.21	-	-	-	3.51	3.31
Pot Cap-1 Maneuver	182	-	-	-	~ 4	164
Stage 1	-	-	-	-	49	-
Stage 2	-	-	-	-	280	-
Platoon blocked, %		-	-	-		
Mov Cap-1 Maneuver	181	-	-	-	~ 3	162
Mov Cap-2 Maneuver	-	-	-	-	~ 3	-
Stage 1	-	-	-	-	49	-
Stage 2	-	-	-	-	243	-

Approach	EB	WB	SB
HCM Control Delay, s	0.3	0	$ 950.2
HCM LOS			F

Minor Lane/Major Mvmt	EBL	EBT	WBT	WBR	SBLn1
Capacity (veh/h)	181	-	-	-	14
HCM Lane V/C Ratio	0.125	-	-	-	1.841
HCM Control Delay (s)	27.7	-	-	-	$ 950.2
HCM Lane LOS	D	-	-	-	F
HCM 95th %tile Q(veh)	0.4	-	-	-	3.9

Notes

~: Volume exceeds capacity $: Delay exceeds 300s +: Computation Not Defined *: All major volume in platoon

Intersection	
Intersection Delay, s/veh	68.6
Intersection LOS	F

Movement	EBL	EBT	EBR	WBL	WBT	WBR	NBL	NBT	NBR	SBL	SBT	SBR
Lane Configurations												
Traffic Vol, veh/h	25	255	70	15	563	18	150	62	6	14	103	153
Future Vol, veh/h	25	255	70	15	563	18	150	62	6	14	103	153
Peak Hour Factor	0.96	0.96	0.96	0.96	0.96	0.96	0.96	0.96	0.96	0.96	0.96	0.96
Heavy Vehicles, %	4	4	4	2	2	2	3	3	3	6	6	6
Mvmt Flow	26	266	73	16	586	19	156	65	6	15	107	159
Number of Lanes	0	1	0	0	1	0	0	1	0	0	1	0

Approach	EB	WB	NB	SB
Opposing Approach	WB	EB	SB	NB
Opposing Lanes	1	1	1	1
Conflicting Approach Left	SB	NB	EB	WB
Conflicting Lanes Left	1	1	1	1
Conflicting Approach Right	NB	SB	WB	EB
Conflicting Lanes Right	1	1	1	1
HCM Control Delay	29	130.6	20.5	22.1
HCM LOS	D	F	C	C

Lane	NBLn1	EBLn1	WBLn1	SBLn1
Vol Left, %	69%	7%	3%	5%
Vol Thru, %	28%	73%	94%	38%
Vol Right, %	3%	20%	3%	57%
Sign Control	Stop	Stop	Stop	Stop
Traffic Vol by Lane	218	350	596	270
LT Vol	150	25	15	14
Through Vol	62	255	563	103
RT Vol	6	70	18	153
Lane Flow Rate	227	365	621	281
Geometry Grp	1	1	1	1
Degree of Util (X)	0.51	0.731	1.198	0.588
Departure Headway (Hd)	8.733	7.722	6.948	8.121
Convergence, Y/N	Yes	Yes	Yes	Yes
Cap	416	470	522	447
Service Time	6.733	5.722	5.035	6.121
HCM Lane V/C Ratio	0.546	0.777	1.19	0.629
HCM Control Delay	20.5	29	130.6	22.1
HCM Lane LOS	C	D	F	C
HCM 95th-tile Q	2.8	5.9	22.8	3.7

HCM 2010 edition methodology does not support a perm + prot left-turn type from a shared lane. Left-turn bay is needed for phases 3.

Movement	EBL	EBT	EBR	WBL	WBT	WBR	NBL	NBT	NBR	SBL	SBT	SBR
Lane Configurations												
Traffic Volume (vph)	78	1645	43	50	1763	130	66	27	53	92	33	83
Future Volume (vph)	78	1645	43	50	1763	130	66	27	53	92	33	83
Ideal Flow (vphpl)	1900	1900	1900	1900	1900	1900	1900	1900	1900	1900	1900	1900
Total Lost time (s)	6.0	6.0		6.0	6.0			6.0			6.0	6.0
Lane Util. Factor	1.00	0.95		1.00	0.95			1.00			1.00	1.00
Frpb, ped/bikes	1.00	1.00		1.00	1.00			0.99			1.00	1.00
Flpb, ped/bikes	1.00	1.00		1.00	1.00			1.00			1.00	1.00
Frt	1.00	1.00		1.00	0.99			0.95			1.00	0.85
Flt Protected	0.95	1.00		0.95	1.00			0.98			0.96	1.00
Satd. Flow (prot)	1787	3556		1770	3486			1702			1779	1568
Flt Permitted	0.04	1.00		0.07	1.00			0.79			0.55	1.00
Satd. Flow (perm)	73	3556		126	3486			1374			1019	1568
Peak-hour factor, PHF	0.92	0.92	0.92	0.92	0.92	0.92	0.92	0.92	0.92	0.92	0.92	0.92
Adj. Flow (vph)	85	1788	47	54	1916	141	72	29	58	100	36	90
RTOR Reduction (vph)	0	1	0	0	3	0	0	11	0	0	0	20
Lane Group Flow (vph)	85	1834	0	54	2054	0	0	148	0	0	136	70
Confl. Peds. (#/hr)	12		8	8		12			3	3		
Heavy Vehicles (%)	1%	1%	1%	2%	2%	2%	3%	3%	3%	3%	3%	3%
Turn Type	pm+pt	NA		pm+pt	NA		Perm	NA		pm+pt	NA	pm+ov
Protected Phases	1	6		5	2			4		3	8	1
Permitted Phases	6			2			4			8		8
Actuated Green, G (s)	140.0	133.0		140.0	133.0			20.0			32.0	39.0
Effective Green, g (s)	140.0	133.0		140.0	133.0			20.0			32.0	39.0
Actuated g/C Ratio	0.74	0.70		0.74	0.70			0.11			0.17	0.21
Clearance Time (s)	6.0	6.0		6.0	6.0			6.0			6.0	6.0
Vehicle Extension (s)	3.0	1.0		3.0	1.0			2.5			2.5	3.0
Lane Grp Cap (vph)	116	2489		153	2440			144			195	371
v/s Ratio Prot	c0.03	0.52		0.01	c0.59						c0.02	0.01
v/s Ratio Perm	0.51			0.25				c0.11			0.10	0.04
v/c Ratio	0.73	0.74		0.35	0.84			1.03			0.70	0.19
Uniform Delay, d1	42.6	17.7		19.2	20.8			85.0			74.4	62.4
Progression Factor	1.00	1.00		1.00	1.00			1.00			1.00	1.00
Incremental Delay, d2	33.3	2.0		6.3	3.7			83.1			18.7	1.1
Delay (s)	75.9	19.7		25.5	24.6			168.1			93.1	63.6
Level of Service	E	B		C	C			F			F	E
Approach Delay (s)		22.1			24.6			168.1			81.4	
Approach LOS		C			C			F			F	

Intersection Summary			
HCM 2000 Control Delay	31.6	HCM 2000 Level of Service	C
HCM 2000 Volume to Capacity ratio	0.86		
Actuated Cycle Length (s)	190.0	Sum of lost time (s)	24.0
Intersection Capacity Utilization	88.1%	ICU Level of Service	E
Analysis Period (min)	15		

c Critical Lane Group

Intersection	
Int Delay, s/veh	0.3

Movement	EBL	EBT	EBR	WBL	WBT	WBR	NBL	NBT	NBR	SBL	SBT	SBR
Lane Configurations												
Traffic Vol, veh/h	55	1737	19	9	1699	28	11	8	32	6	10	118
Future Vol, veh/h	55	1737	19	9	1699	28	11	8	32	6	10	118
Conflicting Peds, #/hr	3	0	5	5	0	3	3	0	2	2	0	3
Sign Control	Free	Free	Free	Free	Free	Free	Stop	Stop	Stop	Stop	Stop	Stop
RT Channelized	-	-	None	-	-	None	-	-	None	-	-	None
Storage Length	0	-	-	50	-	-	-	-	-	150	-	-
Veh in Median Storage, #	-	0	-	-	0	-	-	0	-	-	0	-
Grade, %	-	0	-	-	0	-	-	0	-	-	0	-
Peak Hour Factor	89	89	89	89	89	89	89	89	89	89	89	89
Heavy Vehicles, %	2	2	2	2	2	2	4	4	4	4	4	4
Mvmt Flow	62	1952	21	10	1909	31	12	9	36	7	11	133

Major/Minor	Major1			Major2			Minor1			Minor2		
Conflicting Flow All	1943	0	0	1978	0	0	3074	4055	994	3054	4050	976
Stage 1	-	-	-	-	-	-	2091	2091	-	1948	1948	-
Stage 2	-	-	-	-	-	-	983	1964	-	1106	2102	-
Critical Hdwy	4.14	-	-	4.14	-	-	7.58	6.58	6.98	7.58	6.58	6.98
Critical Hdwy Stg 1	-	-	-	-	-	-	6.58	5.58	-	6.58	5.58	-
Critical Hdwy Stg 2	-	-	-	-	-	-	6.58	5.58	-	6.58	5.58	-
Follow-up Hdwy	2.22	-	-	2.22	-	-	3.54	4.04	3.34	3.54	4.04	3.34
Pot Cap-1 Maneuver	298	-	-	289	-	-	~ 5	~ 2	240	~ 5	~ 2	247
Stage 1	-	-	-	-	-	-	52	90	-	65	107	-
Stage 2	-	-	-	-	-	-	263	105	-	221	89	-
Platoon blocked, %		-	-		-	-						
Mov Cap-1 Maneuver	297	-	-	288	-	-	-	~ 2	238	-	~ 2	246
Mov Cap-2 Maneuver	-	-	-	-	-	-	-	~ 2	-	-	~ 2	-
Stage 1	-	-	-	-	-	-	41	71	-	51	103	-
Stage 2	-	-	-	-	-	-	104	101	-	129	70	-

Approach	EB	WB	NB	SB
HCM Control Delay, s	0.6	0.1		
HCM LOS			-	-

Minor Lane/Major Mvmt	NBLn1	EBL	EBT	EBR	WBL	WBT	WBR	SBLn1	SBLn2
Capacity (veh/h)	-	297	-	-	288	-	-	-	23
HCM Lane V/C Ratio	-	0.208	-	-	0.035	-	-	-	6.253
HCM Control Delay (s)	-	20.3	-	-	18	-	-	-	$ 2699
HCM Lane LOS	-	C	-	-	C	-	-	-	F
HCM 95th %tile Q(veh)	-	0.8	-	-	0.1	-	-	-	18.1

Notes

~: Volume exceeds capacity $: Delay exceeds 300s +: Computation Not Defined *: All major volume in platoon

Intersection	
Intersection Delay, s/veh	10.2
Intersection LOS	B

Movement	EBL	EBT	EBR	WBL	WBT	WBR	NBL	NBT	NBR	SBL	SBT	SBR
Lane Configurations												
Traffic Vol, veh/h	11	99	11	9	337	11	17	18	4	4	44	50
Future Vol, veh/h	11	99	11	9	337	11	17	18	4	4	44	50
Peak Hour Factor	0.94	0.94	0.94	0.94	0.94	0.94	0.94	0.94	0.94	0.94	0.94	0.94
Heavy Vehicles, %	3	3	3	2	2	2	2	2	2	7	7	7
Mvmt Flow	12	105	12	10	359	12	18	19	4	4	47	53
Number of Lanes	0	1	0	0	1	0	0	1	0	0	1	0

Approach	EB	WB	NB	SB
Opposing Approach	WB	EB	SB	NB
Opposing Lanes	1	1	1	1
Conflicting Approach Left	SB	NB	EB	WB
Conflicting Lanes Left	1	1	1	1
Conflicting Approach Right	NB	SB	WB	EB
Conflicting Lanes Right	1	1	1	1
HCM Control Delay	8.7	11.3	8.7	8.8
HCM LOS	A	B	A	A

Lane	NBLn1	EBLn1	WBLn1	SBLn1
Vol Left, %	44%	9%	3%	4%
Vol Thru, %	46%	82%	94%	45%
Vol Right, %	10%	9%	3%	51%
Sign Control	Stop	Stop	Stop	Stop
Traffic Vol by Lane	39	121	357	98
LT Vol	17	11	9	4
Through Vol	18	99	337	44
RT Vol	4	11	11	50
Lane Flow Rate	41	129	380	104
Geometry Grp	1	1	1	1
Degree of Util (X)	0.061	0.168	0.468	0.143
Departure Headway (Hd)	5.265	4.7	4.437	4.933
Convergence, Y/N	Yes	Yes	Yes	Yes
Cap	677	761	813	724
Service Time	3.322	2.744	2.471	2.984
HCM Lane V/C Ratio	0.061	0.17	0.467	0.144
HCM Control Delay	8.7	8.7	11.3	8.8
HCM Lane LOS	A	A	B	A
HCM 95th-tile Q	0.2	0.6	2.5	0.5

Intersection	
Int Delay, s/veh	5.3

Movement	EBL	EBT	EBR	WBL	WBT	WBR	NBL	NBT	NBR	SBL	SBT	SBR
Lane Configurations												
Traffic Vol, veh/h	9	86	15	39	318	47	18	65	18	18	72	20
Future Vol, veh/h	9	86	15	39	318	47	18	65	18	18	72	20
Conflicting Peds, #/hr	2	0	2	2	0	2	0	0	2	2	0	0
Sign Control	Free	Free	Free	Free	Free	Free	Stop	Stop	Stop	Stop	Stop	Stop
RT Channelized	-	-	None	-	-	None	-	-	None	-	-	None
Storage Length	-	-	-	-	-	-	-	-	-	-	-	-
Veh in Median Storage, #	-	0	-	-	0	-	-	0	-	-	0	-
Grade, %	-	0	-	-	0	-	-	0	-	-	0	-
Peak Hour Factor	94	94	94	94	94	94	94	94	94	94	94	94
Heavy Vehicles, %	1	1	1	2	2	2	3	3	3	2	2	2
Mvmt Flow	10	91	16	41	338	50	19	69	19	19	77	21

Major/Minor	Major1			Major2			Minor1			Minor2		
Conflicting Flow All	390	0	0	109	0	0	616	594	103	613	577	365
Stage 1	-	-	-	-	-	-	121	121	-	448	448	-
Stage 2	-	-	-	-	-	-	495	473	-	165	129	-
Critical Hdwy	4.11	-	-	4.12	-	-	7.13	6.53	6.23	7.12	6.52	6.22
Critical Hdwy Stg 1	-	-	-	-	-	-	6.13	5.53	-	6.12	5.52	-
Critical Hdwy Stg 2	-	-	-	-	-	-	6.13	5.53	-	6.12	5.52	-
Follow-up Hdwy	2.209	-	-	2.218	-	-	3.527	4.027	3.327	3.518	4.018	3.318
Pot Cap-1 Maneuver	1174	-	-	1481	-	-	401	417	949	405	427	680
Stage 1	-	-	-	-	-	-	881	794	-	590	573	-
Stage 2	-	-	-	-	-	-	555	557	-	837	789	-
Platoon blocked, %		-	-		-	-						
Mov Cap-1 Maneuver	1174	-	-	1478	-	-	321	397	945	331	406	679
Mov Cap-2 Maneuver	-	-	-	-	-	-	321	397	-	331	406	-
Stage 1	-	-	-	-	-	-	871	785	-	584	551	-
Stage 2	-	-	-	-	-	-	446	536	-	740	780	-

Approach	EB	WB	NB	SB
HCM Control Delay, s	0.7	0.7	16.4	16.8
HCM LOS			C	C

Minor Lane/Major Mvmt	NBLn1	EBL	EBT	EBR	WBL	WBT	WBR	SBLn1
Capacity (veh/h)	423	1174	-	-	1478	-	-	421
HCM Lane V/C Ratio	0.254	0.008	-	-	0.028	-	-	0.278
HCM Control Delay (s)	16.4	8.1	0	-	7.5	0	-	16.8
HCM Lane LOS	C	A	A	-	A	A	-	C
HCM 95th %tile Q(veh)	1	0	-	-	0.1	-	-	1.1

Movement	EBL	EBT	EBR	WBL	WBT	WBR	NBL	NBT	NBR	SBL	SBT	SBR
Lane Configurations												
Traffic Volume (veh/h)	1	170	15	130	573	33	18	44	81	23	58	17
Future Volume (veh/h)	1	170	15	130	573	33	18	44	81	23	58	17
Number	5	2	12	1	6	16	7	4	14	3	8	18
Initial Q (Qb), veh	0	0	0	0	0	0	0	0	0	0	0	0
Ped-Bike Adj(A_pbT)	1.00		1.00	1.00		1.00	1.00		1.00	1.00		1.00
Parking Bus, Adj	1.00	1.00	1.00	1.00	1.00	1.00	1.00	1.00	1.00	1.00	1.00	1.00
Adj Sat Flow, veh/h/ln	1900	1881	1900	1900	1881	1900	1900	1863	1900	1900	1863	1900
Adj Flow Rate, veh/h	1	179	16	137	603	35	19	46	85	24	61	18
Adj No. of Lanes	0	1	0	0	1	0	0	1	0	0	1	0
Peak Hour Factor	0.95	0.95	0.95	0.95	0.95	0.95	0.95	0.95	0.95	0.95	0.95	0.95
Percent Heavy Veh, %	1	1	1	1	1	1	2	2	2	2	2	2
Cap, veh/h	75	1041	93	231	868	48	100	84	133	126	169	43
Arrive On Green	0.61	0.61	0.61	0.61	0.61	0.61	0.14	0.14	0.14	0.14	0.14	0.14
Sat Flow, veh/h	1	1700	151	236	1418	78	121	591	931	251	1186	304
Grp Volume(v), veh/h	196	0	0	775	0	0	150	0	0	103	0	0
Grp Sat Flow(s),veh/h/ln	1853	0	0	1731	0	0	1644	0	0	1741	0	0
Q Serve(g_s), s	0.0	0.0	0.0	8.4	0.0	0.0	1.3	0.0	0.0	0.0	0.0	0.0
Cycle Q Clear(g_c), s	2.2	0.0	0.0	14.8	0.0	0.0	4.2	0.0	0.0	2.5	0.0	0.0
Prop In Lane	0.01		0.08	0.18		0.05	0.13		0.57	0.23		0.17
Lane Grp Cap(c), veh/h	1209	0	0	1147	0	0	317	0	0	339	0	0
V/C Ratio(X)	0.16	0.00	0.00	0.68	0.00	0.00	0.47	0.00	0.00	0.30	0.00	0.00
Avail Cap(c_a), veh/h	1209	0	0	1147	0	0	745	0	0	771	0	0
HCM Platoon Ratio	1.00	1.00	1.00	1.00	1.00	1.00	1.00	1.00	1.00	1.00	1.00	1.00
Upstream Filter(I)	1.00	0.00	0.00	1.00	0.00	0.00	1.00	0.00	0.00	1.00	0.00	0.00
Uniform Delay (d), s/veh	4.1	0.0	0.0	6.4	0.0	0.0	19.8	0.0	0.0	19.1	0.0	0.0
Incr Delay (d2), s/veh	0.3	0.0	0.0	1.3	0.0	0.0	0.8	0.0	0.0	0.4	0.0	0.0
Initial Q Delay(d3),s/veh	0.0	0.0	0.0	0.0	0.0	0.0	0.0	0.0	0.0	0.0	0.0	0.0
%ile BackOfQ(50%),veh/ln	1.2	0.0	0.0	7.3	0.0	0.0	2.0	0.0	0.0	1.3	0.0	0.0
LnGrp Delay(d),s/veh	4.4	0.0	0.0	7.7	0.0	0.0	20.6	0.0	0.0	19.5	0.0	0.0
LnGrp LOS	A			A			C			B		
Approach Vol, veh/h		196			775			150			103	
Approach Delay, s/veh		4.4			7.7			20.6			19.5	
Approach LOS		A			A			C			B	

Timer	1	2	3	4	5	6	7	8
Assigned Phs		2		4		6		8
Phs Duration (G+Y+Rc), s		36.0		13.0		36.0		13.0
Change Period (Y+Rc), s		6.0		6.0		6.0		6.0
Max Green Setting (Gmax), s		30.0		20.0		30.0		20.0
Max Q Clear Time (g_c+I1), s		4.2		6.2		16.8		4.5
Green Ext Time (p_c), s		2.6		1.0		2.3		1.0

Intersection Summary	
HCM 2010 Ctrl Delay	9.8
HCM 2010 LOS	A

HCM 2010 methodology does not support clustered intersections.

Movement	EBL	EBT	EBR	WBL	WBT	WBR	NBL	NBT	NBR	SBL	SBT	SBR
Lane Configurations												
Traffic Volume (vph)	20	1723	15	15	1604	29	17	4	8	17	0	11
Future Volume (vph)	20	1723	15	15	1604	29	17	4	8	17	0	11
Ideal Flow (vphpl)	1900	1900	1900	1900	1900	1900	1900	1900	1900	1900	1900	1900
Total Lost time (s)	6.0	6.4			6.4	6.4		6.0			5.7	
Lane Util. Factor	1.00	0.95			0.91	1.00		1.00			1.00	
Frpb, ped/bikes	1.00	1.00			1.00	0.96		1.00			1.00	
Flpb, ped/bikes	1.00	1.00			1.00	1.00		1.00			1.00	
Frt	1.00	1.00			1.00	0.85		0.96			0.95	
Flt Protected	0.95	1.00			1.00	1.00		0.97			0.97	
Satd. Flow (prot)	1770	3534			5083	1525		1699			1707	
Flt Permitted	0.95	1.00			0.87	1.00		0.86			0.81	
Satd. Flow (perm)	1770	3534			4432	1525		1512			1421	
Peak-hour factor, PHF	0.94	0.94	0.94	0.94	0.94	0.94	0.94	0.94	0.94	0.94	0.94	0.94
Adj. Flow (vph)	21	1833	16	16	1706	31	18	4	9	18	0	12
RTOR Reduction (vph)	0	0	0	0	0	11	0	7	0	0	28	0
Lane Group Flow (vph)	21	1849	0	0	1722	20	0	24	0	0	2	0
Confl. Peds. (#/hr)	3		2	2		3			1	1		
Heavy Vehicles (%)	2%	2%	2%	2%	2%	2%	4%	4%	4%	2%	2%	2%
Turn Type	Prot	NA		Prot	NA	Perm	Perm	NA		Perm	NA	
Protected Phases	1 13	6 13		5 8!	2 8!			3!			7	
Permitted Phases						2 8	3!			7		
Actuated Green, G (s)	33.8	94.0			113.8	113.8		44.0			14.3	
Effective Green, g (s)	33.8	94.0			113.8	113.8		44.0			14.3	
Actuated g/C Ratio	0.19	0.52			0.63	0.63		0.24			0.08	
Clearance Time (s)								6.0			5.7	
Vehicle Extension (s)								2.5			2.0	
Lane Grp Cap (vph)	332	1845			2998	964		369			112	
v/s Ratio Prot	0.01	c0.52			c0.17							
v/s Ratio Perm					0.19	0.01		c0.02			0.00	
v/c Ratio	0.06	1.00			0.57	0.02		0.07			0.02	
Uniform Delay, d1	60.1	43.0			19.1	12.3		52.2			76.4	
Progression Factor	1.00	1.00			1.00	1.00		1.00			1.00	
Incremental Delay, d2	0.0	21.4			0.2	0.0		0.3			0.3	
Delay (s)	60.1	64.4			19.3	12.3		52.6			76.7	
Level of Service	E	E			B	B		D			E	
Approach Delay (s)		64.4			19.2			52.6			76.7	
Approach LOS		E			B			D			E	

Intersection Summary			
HCM 2000 Control Delay	42.9	HCM 2000 Level of Service	D
HCM 2000 Volume to Capacity ratio	0.86		
Actuated Cycle Length (s)	180.0	Sum of lost time (s)	30.5
Intersection Capacity Utilization	82.9%	ICU Level of Service	E
Analysis Period (min)	15		

! Phase conflict between lane groups.
c Critical Lane Group

Intersection	
Int Delay, s/veh	1

Movement	EBL	EBT	EBR	WBL	WBT	WBR	NBL	NBT	NBR	SBL	SBT	SBR
Lane Configurations												
Traffic Vol, veh/h	69	1662	69	15	1388	104	55	10	24	10	8	32
Future Vol, veh/h	69	1662	69	15	1388	104	55	10	24	10	8	32
Conflicting Peds, #/hr	1	0	4	4	0	1	0	0	1	1	0	0
Sign Control	Free	Free	Free	Free	Free	Free	Stop	Stop	Stop	Stop	Stop	Stop
RT Channelized	-	-	None	-	-	None	-	-	None	-	-	None
Storage Length	-	-	80	-	-	100	-	-	-	-	-	-
Veh in Median Storage, #	-	0	-	-	0	-	-	0	-	-	0	-
Grade, %	-	0	-	-	0	-	-	0	-	-	0	-
Peak Hour Factor	96	96	96	96	96	96	96	96	96	96	96	96
Heavy Vehicles, %	2	2	2	2	2	2	1	1	1	1	1	1
Mvmt Flow	72	1731	72	16	1446	108	57	10	25	10	8	33

Major/Minor	Major1			Major2			Minor1			Minor2		
Conflicting Flow All	1447	0	0	1735	0	0	2637	3357	871	2494	3357	724
Stage 1	-	-	-	-	-	-	1879	1879	-	1478	1478	-
Stage 2	-	-	-	-	-	-	758	1478	-	1016	1879	-
Critical Hdwy	4.14	-	-	4.14	-	-	7.52	6.52	6.92	7.52	6.52	6.92
Critical Hdwy Stg 1	-	-	-	-	-	-	6.52	5.52	-	6.52	5.52	-
Critical Hdwy Stg 2	-	-	-	-	-	-	6.52	5.52	-	6.52	5.52	-
Follow-up Hdwy	2.22	-	-	2.22	-	-	3.51	4.01	3.31	3.51	4.01	3.31
Pot Cap-1 Maneuver	464	-	-	359	-	-	~ 12	~ 8	296	15	~ 8	370
Stage 1	-	-	-	-	-	-	74	120	-	133	190	-
Stage 2	-	-	-	-	-	-	368	190	-	257	120	-
Platoon blocked, %		-	-		-	-						
Mov Cap-1 Maneuver	464	-	-	359	-	-	-	~ 5	295	-	~ 5	370
Mov Cap-2 Maneuver	-	-	-	-	-	-	-	~ 5	-	-	~ 5	-
Stage 1	-	-	-	-	-	-	74	120	-	133	122	-
Stage 2	-	-	-	-	-	-	200	122	-	215	120	-

Approach	EB	WB	NB	SB
HCM Control Delay, s	0.5	1.8		
HCM LOS			-	-

Minor Lane/Major Mvmt	NBLn1	EBL	EBT	EBR	WBL	WBT	WBR	SBLn1
Capacity (veh/h)	-	464	-	-	359	-	-	-
HCM Lane V/C Ratio	-	0.155	-	-	0.044	-	-	-
HCM Control Delay (s)	-	14.2	0	-	15.5	1.8	-	-
HCM Lane LOS	-	B	A	-	C	A	-	-
HCM 95th %tile Q(veh)	-	0.5	-	-	0.1	-	-	-

Notes			
~: Volume exceeds capacity	$: Delay exceeds 300s	+: Computation Not Defined	*: All major volume in platoon

Intersection	
Int Delay, s/veh	0.9

Movement	EBL	EBT	EBR	WBL	WBT	WBR	NBL	NBT	NBR	SBL	SBT	SBR
Lane Configurations												
Traffic Vol, veh/h	5	2422	15	23	2177	5	0	0	0	1	0	0
Future Vol, veh/h	5	2422	15	23	2177	5	0	0	0	1	0	0
Conflicting Peds, #/hr	1	0	4	4	0	1	0	0	1	1	0	0
Sign Control	Free	Free	Free	Free	Free	Free	Stop	Stop	Stop	Stop	Stop	Stop
RT Channelized	-	-	None	-	-	None	-	-	None	-	-	None
Storage Length	50	-	-	-	-	-	-	-	-	0	-	90
Veh in Median Storage, #	-	0	-	-	0	-	-	0	-	-	0	-
Grade, %	-	0	-	-	0	-	-	0	-	-	0	-
Peak Hour Factor	90	90	90	90	90	90	90	90	90	90	90	90
Heavy Vehicles, %	2	2	2	2	2	2	2	2	2	26	2	26
Mvmt Flow	6	2691	17	26	2419	6	0	0	0	1	0	0

Major/Minor	Major1			Major2			Minor1			Minor2		
Conflicting Flow All	2425	0	0	2712	0	0	3734	5192	1359	3563	-	1213
Stage 1	-	-	-	-	-	-	2715	2715	-	2474	-	-
Stage 2	-	-	-	-	-	-	1019	2477	-	1089	-	-
Critical Hdwy	5.34	-	-	5.34	-	-	6.44	6.54	7.14	6.92	-	7.62
Critical Hdwy Stg 1	-	-	-	-	-	-	7.34	5.54	-	7.82	-	-
Critical Hdwy Stg 2	-	-	-	-	-	-	6.74	5.54	-	7.22	-	-
Follow-up Hdwy	3.12	-	-	3.12	-	-	3.82	4.02	3.92	4.06	-	4.16
Pot Cap-1 Maneuver	76	-	-	54	-	-	5	0	119	4	0	123
Stage 1	-	-	-	-	-	-	11	44	-	12	0	-
Stage 2	-	-	-	-	-	-	229	58	-	173	0	-
Platoon blocked, %		-	-		-	-						
Mov Cap-1 Maneuver	76	-	-	54	-	-	5	0	118	4	-	123
Mov Cap-2 Maneuver	-	-	-	-	-	-	5	0	-	4	-	-
Stage 1	-	-	-	-	-	-	10	40	-	11	-	-
Stage 2	-	-	-	-	-	-	229	58	-	159	-	-

Approach	EB	WB	NB	SB
HCM Control Delay, s	0.1	1.3	0	$ 1115.2
HCM LOS			A	F

Minor Lane/Major Mvmt	NBLn1	EBL	EBT	EBR	WBL	WBT	WBR	SBLn1	SBLn2
Capacity (veh/h)	-	76	-	-	54	-	-	4	-
HCM Lane V/C Ratio	-	0.073	-	-	0.473	-	-	0.278	-
HCM Control Delay (s)	0	56.1	-	-	121.2	0	$	1115.2	0
HCM Lane LOS	A	F	-	-	F	A	-	F	A
HCM 95th %tile Q(veh)	-	0.2	-	-	1.8	-	-	0.5	-

Notes

~: Volume exceeds capacity $: Delay exceeds 300s +: Computation Not Defined *: All major volume in platoon

Intersection	
Int Delay, s/veh	6.8

Movement	EBL	EBT	EBR	WBL	WBT	WBR	NBL	NBT	NBR	SBL	SBT	SBR
Lane Configurations												
Traffic Vol, veh/h	61	1834	243	28	2317	5	0	0	78	0	0	121
Future Vol, veh/h	61	1834	243	28	2317	5	0	0	78	0	0	121
Conflicting Peds, #/hr	0	0	1	1	0	0	7	0	0	0	0	7
Sign Control	Free	Free	Free	Free	Free	Free	Stop	Stop	Stop	Stop	Stop	Stop
RT Channelized	-	-	None	-	-	None	-	-	None	-	-	None
Storage Length	0	-	-	120	-	-	-	-	0	-	-	0
Veh in Median Storage, #	-	0	-	-	0	-	-	0	-	-	0	-
Grade, %	-	0	-	-	0	-	-	0	-	-	0	-
Peak Hour Factor	93	93	93	93	93	93	93	93	93	93	93	93
Heavy Vehicles, %	2	2	2	2	2	2	2	2	2	2	2	2
Mvmt Flow	66	1972	261	30	2491	5	0	0	84	0	0	130

Major/Minor	Major1			Major2			Minor1			Minor2		
Conflicting Flow All	2497	0	0	2234	0	0	-	-	1118	-	-	1255
Stage 1	-	-	-	-	-	-	-	-	-	-	-	-
Stage 2	-	-	-	-	-	-	-	-	-	-	-	-
Critical Hdwy	5.34	-	-	5.34	-	-	-	-	7.14	-	-	7.14
Critical Hdwy Stg 1	-	-	-	-	-	-	-	-	-	-	-	-
Critical Hdwy Stg 2	-	-	-	-	-	-	-	-	-	-	-	-
Follow-up Hdwy	3.12	-	-	3.12	-	-	-	-	3.92	-	-	3.92
Pot Cap-1 Maneuver	69	-	-	95	-	-	0	0	173	0	0	140
Stage 1	-	-	-	-	-	-	0	0	-	0	0	-
Stage 2	-	-	-	-	-	-	0	0	-	0	0	-
Platoon blocked, %		-	-		-	-						
Mov Cap-1 Maneuver	69	-	-	95	-	-	-	-	173	-	-	139
Mov Cap-2 Maneuver	-	-	-	-	-	-	-	-	-	-	-	-
Stage 1	-	-	-	-	-	-	-	-	-	-	-	-
Stage 2	-	-	-	-	-	-	-	-	-	-	-	-

Approach	EB	WB	NB	SB
HCM Control Delay, s	5.6	0.7	44	121.9
HCM LOS			E	F

Minor Lane/Major Mvmt	NBLn1	EBL	EBT	EBR	WBL	WBT	WBR	SBLn1
Capacity (veh/h)	173	69	-	-	95	-	-	139
HCM Lane V/C Ratio	0.485	0.951	-	-	0.317	-	-	0.936
HCM Control Delay (s)	44	195.9	-	-	59.6	-	-	121.9
HCM Lane LOS	E	F	-	-	F	-	-	F
HCM 95th %tile Q(veh)	2.3	4.8	-	-	1.2	-	-	6.5

Intersection	
Int Delay, s/veh	1.1

Movement	EBT	EBR	WBL	WBT	NBL	NBR
Lane Configurations						
Traffic Vol, veh/h	1049	29	20	1862	18	20
Future Vol, veh/h	1049	29	20	1862	18	20
Conflicting Peds, #/hr	0	4	4	0	0	2
Sign Control	Free	Free	Free	Free	Stop	Stop
RT Channelized	-	None	-	None	-	None
Storage Length	-	-	80	-	0	-
Veh in Median Storage, #	0	-	-	0	0	-
Grade, %	0	-	-	0	0	-
Peak Hour Factor	97	97	97	97	97	97
Heavy Vehicles, %	2	2	2	2	1	1
Mvmt Flow	1081	30	21	1920	19	21

Major/Minor	Major1		Major2		Minor1	
Conflicting Flow All	0	0	1115	0	2101	562
Stage 1	-	-	-	-	1100	-
Stage 2	-	-	-	-	1001	-
Critical Hdwy	-	-	4.14	-	6.82	6.92
Critical Hdwy Stg 1	-	-	-	-	5.82	-
Critical Hdwy Stg 2	-	-	-	-	5.82	-
Follow-up Hdwy	-	-	2.22	-	3.51	3.31
Pot Cap-1 Maneuver	-	-	622	-	45	473
Stage 1	-	-	-	-	282	-
Stage 2	-	-	-	-	318	-
Platoon blocked, %	-	-		-		
Mov Cap-1 Maneuver	-	-	621	-	43	470
Mov Cap-2 Maneuver	-	-	-	-	43	-
Stage 1	-	-	-	-	281	-
Stage 2	-	-	-	-	307	-

Approach	EB	WB	NB
HCM Control Delay, s	0	0.1	83.9
HCM LOS			F

Minor Lane/Major Mvmt	NBLn1	EBT	EBR	WBL	WBT
Capacity (veh/h)	82	-	-	621	-
HCM Lane V/C Ratio	0.478	-	-	0.033	-
HCM Control Delay (s)	83.9	-	-	11	-
HCM Lane LOS	F	-	-	B	-
HCM 95th %tile Q(veh)	2	-	-	0.1	-

Intersection	
Int Delay, s/veh	0.4

Movement	EBT	EBR	WBL	WBT	NBL	NBR
Lane Configurations						
Traffic Vol, veh/h	1059	4	28	1898	5	23
Future Vol, veh/h	1059	4	28	1898	5	23
Conflicting Peds, #/hr	0	3	3	0	0	0
Sign Control	Free	Free	Free	Free	Stop	Stop
RT Channelized	-	None	-	None	-	None
Storage Length	-	-	80	-	0	-
Veh in Median Storage, #	0	-	-	0	0	-
Grade, %	0	-	-	0	0	-
Peak Hour Factor	97	97	97	97	97	97
Heavy Vehicles, %	2	2	2	2	3	3
Mvmt Flow	1092	4	29	1957	5	24

Major/Minor	Major1		Major2		Minor1	
Conflicting Flow All	0	0	1099	0	2133	551
Stage 1	-	-	-	-	1097	-
Stage 2	-	-	-	-	1036	-
Critical Hdwy	-	-	4.14	-	6.86	6.96
Critical Hdwy Stg 1	-	-	-	-	5.86	-
Critical Hdwy Stg 2	-	-	-	-	5.86	-
Follow-up Hdwy	-	-	2.22	-	3.53	3.33
Pot Cap-1 Maneuver	-	-	631	-	42	476
Stage 1	-	-	-	-	279	-
Stage 2	-	-	-	-	301	-
Platoon blocked, %	-	-		-		
Mov Cap-1 Maneuver	-	-	631	-	40	475
Mov Cap-2 Maneuver	-	-	-	-	40	-
Stage 1	-	-	-	-	278	-
Stage 2	-	-	-	-	287	-

Approach	EB	WB	NB
HCM Control Delay, s	0	0.2	32.2
HCM LOS			D

Minor Lane/Major Mvmt	NBLn1	EBT	EBR	WBL	WBT
Capacity (veh/h)	161	-	-	631	-
HCM Lane V/C Ratio	0.179	-	-	0.046	-
HCM Control Delay (s)	32.2	-	-	11	-
HCM Lane LOS	D	-	-	B	-
HCM 95th %tile Q(veh)	0.6	-	-	0.1	-

Intersection	
Int Delay, s/veh	1.7

Movement	EBL	EBT	WBT	WBR	SBL	SBR
Lane Configurations						
Traffic Vol, veh/h	19	1076	2142	5	4	66
Future Vol, veh/h	19	1076	2142	5	4	66
Conflicting Peds, #/hr	1	0	0	1	0	0
Sign Control	Free	Free	Free	Free	Stop	Stop
RT Channelized	-	None	-	None	-	None
Storage Length	135	-	-	-	0	-
Veh in Median Storage, #	-	0	0	-	0	-
Grade, %	-	0	0	-	0	-
Peak Hour Factor	98	98	98	98	98	98
Heavy Vehicles, %	1	1	1	1	1	1
Mvmt Flow	19	1098	2186	5	4	67

Major/Minor	Major1		Major2		Minor2	
Conflicting Flow All	2192	0	-	0	2777	1096
Stage 1	-	-	-	-	2189	-
Stage 2	-	-	-	-	588	-
Critical Hdwy	4.12	-	-	-	6.82	6.92
Critical Hdwy Stg 1	-	-	-	-	5.82	-
Critical Hdwy Stg 2	-	-	-	-	5.82	-
Follow-up Hdwy	2.21	-	-	-	3.51	3.31
Pot Cap-1 Maneuver	241	-	-	-	15	210
Stage 1	-	-	-	-	72	-
Stage 2	-	-	-	-	521	-
Platoon blocked, %		-	-	-		
Mov Cap-1 Maneuver	241	-	-	-	14	210
Mov Cap-2 Maneuver	-	-	-	-	14	-
Stage 1	-	-	-	-	72	-
Stage 2	-	-	-	-	479	-

Approach	EB	WB	SB
HCM Control Delay, s	0.4	0	75.1
HCM LOS			F

Minor Lane/Major Mvmt	EBL	EBT	WBT	WBR	SBLn1
Capacity (veh/h)	241	-	-	-	117
HCM Lane V/C Ratio	0.08	-	-	-	0.611
HCM Control Delay (s)	21.2	-	-	-	75.1
HCM Lane LOS	C	-	-	-	F
HCM 95th %tile Q(veh)	0.3	-	-	-	3.1

HCM 2010 Research does not support Non-NEMA phasing.

Movement	EBT	EBR	WBL	WBT	NBL	NBR
Lane Configurations						
Traffic Volume (vph)	286	108	316	580	338	216
Future Volume (vph)	286	108	316	580	338	216
Ideal Flow (vphpl)	1900	1900	1900	1900	1900	1900
Total Lost time (s)	7.5		7.2	7.5	6.0	7.2
Lane Util. Factor	1.00		1.00	1.00	0.97	1.00
Frpb, ped/bikes	1.00		1.00	1.00	1.00	1.00
Flpb, ped/bikes	1.00		1.00	1.00	1.00	1.00
Frt	0.96		1.00	1.00	1.00	0.85
Flt Protected	1.00		0.95	1.00	0.95	1.00
Satd. Flow (prot)	1787		1787	1881	3400	1568
Flt Permitted	1.00		0.37	1.00	0.95	1.00
Satd. Flow (perm)	1787		705	1881	3400	1568
Peak-hour factor, PHF	0.91	0.91	0.91	0.91	0.91	0.91
Adj. Flow (vph)	314	119	347	637	371	237
RTOR Reduction (vph)	15	0	0	0	0	217
Lane Group Flow (vph)	418	0	347	637	371	20
Confl. Peds. (#/hr)		3	3			3
Heavy Vehicles (%)	2%	2%	1%	1%	3%	3%
Turn Type	NA		pm+pt	NA	Perm	Over
Protected Phases	6		5	2		5
Permitted Phases			2		4	
Actuated Green, G (s)	40.6		54.6	54.6	13.6	6.8
Effective Green, g (s)	40.6		54.6	54.6	13.6	6.8
Actuated g/C Ratio	0.50		0.67	0.67	0.17	0.08
Clearance Time (s)	7.5		7.2	7.5	6.0	7.2
Vehicle Extension (s)	1.0		2.0	1.0	2.5	2.0
Lane Grp Cap (vph)	888		561	1257	565	130
v/s Ratio Prot	0.23		0.05	c0.34		0.01
v/s Ratio Perm			c0.36		c0.11	
v/c Ratio	0.47		0.62	0.51	0.66	0.15
Uniform Delay, d1	13.5		7.1	6.8	31.9	34.8
Progression Factor	1.00		1.00	1.00	1.00	1.00
Incremental Delay, d2	1.8		1.4	1.5	2.5	0.2
Delay (s)	15.3		8.6	8.3	34.3	35.0
Level of Service	B		A	A	C	C
Approach Delay (s)	15.3			8.4	34.6	
Approach LOS	B			A	C	

Intersection Summary			
HCM 2000 Control Delay	17.7	HCM 2000 Level of Service	B
HCM 2000 Volume to Capacity ratio	0.68		
Actuated Cycle Length (s)	81.7	Sum of lost time (s)	20.7
Intersection Capacity Utilization	66.1%	ICU Level of Service	C
Analysis Period (min)	15		

c Critical Lane Group

Intersection	
Int Delay, s/veh	1.1

Movement	EBL	EBT	WBT	WBR	SBL	SBR
Lane Configurations						
Traffic Vol, veh/h	17	264	693	10	8	51
Future Vol, veh/h	17	264	693	10	8	51
Conflicting Peds, #/hr	0	0	0	0	0	0
Sign Control	Free	Free	Free	Free	Stop	Stop
RT Channelized	-	None	-	None	-	None
Storage Length	-	-	-	-	0	-
Veh in Median Storage, #	-	0	0	-	0	-
Grade, %	-	0	0	-	0	-
Peak Hour Factor	96	96	96	96	96	96
Heavy Vehicles, %	2	2	1	1	1	1
Mvmt Flow	18	275	722	10	8	53

Major/Minor	Major1		Major2		Minor2	
Conflicting Flow All	732	0	-	0	1037	727
Stage 1	-	-	-	-	727	-
Stage 2	-	-	-	-	310	-
Critical Hdwy	4.12	-	-	-	6.41	6.21
Critical Hdwy Stg 1	-	-	-	-	5.41	-
Critical Hdwy Stg 2	-	-	-	-	5.41	-
Follow-up Hdwy	2.218	-	-	-	3.509	3.309
Pot Cap-1 Maneuver	873	-	-	-	257	426
Stage 1	-	-	-	-	480	-
Stage 2	-	-	-	-	746	-
Platoon blocked, %		-	-	-		
Mov Cap-1 Maneuver	873	-	-	-	251	426
Mov Cap-2 Maneuver	-	-	-	-	251	-
Stage 1	-	-	-	-	480	-
Stage 2	-	-	-	-	728	-

Approach	EB	WB	SB
HCM Control Delay, s	0.6	0	16
HCM LOS			C

Minor Lane/Major Mvmt	EBL	EBT	WBT	WBR	SBLn1
Capacity (veh/h)	873	-	-	-	389
HCM Lane V/C Ratio	0.02	-	-	-	0.158
HCM Control Delay (s)	9.2	0	-	-	16
HCM Lane LOS	A	A	-	-	C
HCM 95th %tile Q(veh)	0.1	-	-	-	0.6

Intersection	
Int Delay, s/veh	27.3

Movement	EBL	EBT	WBT	WBR	SBL	SBR
Lane Configurations						
Traffic Vol, veh/h	11	1096	2045	6	34	48
Future Vol, veh/h	11	1096	2045	6	34	48
Conflicting Peds, #/hr	1	0	0	1	1	0
Sign Control	Free	Free	Free	Free	Stop	Stop
RT Channelized	-	None	-	None	-	None
Storage Length	60	-	-	-	0	-
Veh in Median Storage, #	-	0	0	-	0	-
Grade, %	-	0	0	-	0	-
Peak Hour Factor	95	95	95	95	95	95
Heavy Vehicles, %	1	1	1	1	3	3
Mvmt Flow	12	1154	2153	6	36	51

Major/Minor	Major1		Major2		Minor2	
Conflicting Flow All	2160	0	-	0	2758	1080
Stage 1	-	-	-	-	2157	-
Stage 2	-	-	-	-	601	-
Critical Hdwy	4.12	-	-	-	6.86	6.96
Critical Hdwy Stg 1	-	-	-	-	5.86	-
Critical Hdwy Stg 2	-	-	-	-	5.86	-
Follow-up Hdwy	2.21	-	-	-	3.53	3.33
Pot Cap-1 Maneuver	248	-	-	-	~ 15	212
Stage 1	-	-	-	-	73	-
Stage 2	-	-	-	-	507	-
Platoon blocked, %		-	-	-		
Mov Cap-1 Maneuver	248	-	-	-	~ 14	212
Mov Cap-2 Maneuver	-	-	-	-	~ 14	-
Stage 1	-	-	-	-	73	-
Stage 2	-	-	-	-	482	-

Approach	EB	WB	SB
HCM Control Delay, s	0.2	0	$ 1076.4
HCM LOS			F

Minor Lane/Major Mvmt	EBL	EBT	WBT	WBR	SBLn1
Capacity (veh/h)	248	-	-	-	31
HCM Lane V/C Ratio	0.047	-	-	-	2.784
HCM Control Delay (s)	20.2	-	-		$ 1076.4
HCM Lane LOS	C	-	-	-	F
HCM 95th %tile Q(veh)	0.1	-	-	-	10.1

Notes

~: Volume exceeds capacity $: Delay exceeds 300s +: Computation Not Defined *: All major volume in platoon

Intersection	
Intersection Delay, s/veh	8
Intersection LOS	A

Movement	EBL	EBT	EBR	WBL	WBT	WBR	NBL	NBT	NBR	SBL	SBT	SBR
Lane Configurations												
Traffic Vol, veh/h	9	33	0	0	135	39	0	0	0	34	0	48
Future Vol, veh/h	9	33	0	0	135	39	0	0	0	34	0	48
Peak Hour Factor	0.88	0.88	0.88	0.88	0.88	0.88	0.88	0.88	0.88	0.88	0.88	0.88
Heavy Vehicles, %	1	1	1	1	1	1	1	1	1	1	1	1
Mvmt Flow	10	38	0	0	153	44	0	0	0	39	0	55
Number of Lanes	0	1	0	0	1	0	0	1	0	0	1	0

Approach	EB	WB	NB	SB
Opposing Approach	WB	EB	SB	NB
Opposing Lanes	1	1	1	1
Conflicting Approach Left	SB	NB	EB	WB
Conflicting Lanes Left	1	1	1	1
Conflicting Approach Right	NB	SB	WB	EB
Conflicting Lanes Right	1	1	1	1
HCM Control Delay	7.6	8.2	0	7.7
HCM LOS	A	A	-	A

Lane	NBLn1	EBLn1	WBLn1	SBLn1
Vol Left, %	0%	21%	0%	41%
Vol Thru, %	100%	79%	78%	0%
Vol Right, %	0%	0%	22%	59%
Sign Control	Stop	Stop	Stop	Stop
Traffic Vol by Lane	0	42	174	82
LT Vol	0	9	0	34
Through Vol	0	33	135	0
RT Vol	0	0	39	48
Lane Flow Rate	0	48	198	93
Geometry Grp	1	1	1	1
Degree of Util (X)	0	0.057	0.219	0.108
Departure Headway (Hd)	4.551	4.276	3.982	4.178
Convergence, Y/N	Yes	Yes	Yes	Yes
Cap	0	826	894	863
Service Time	2.554	2.365	2.045	2.178
HCM Lane V/C Ratio	0	0.058	0.221	0.108
HCM Control Delay	7.6	7.6	8.2	7.7
HCM Lane LOS	N	A	A	A
HCM 95th-tile Q	0	0.2	0.8	0.4

SimTraffic Queue Analysis – Future Condition – AM

Intersection: 1: SW 69th Ave/NW 69th Ave & W Flagler St

Movement	EB	EB	WB	WB	WB	NB	NB	SB	SB	SB
Directions Served	LT	TR	L	T	TR	L	TR	L	T	R
Maximum Queue (ft)	63	63	28	819	867	143	223	29	94	135
Average Queue (ft)	57	53	14	585	606	89	131	6	47	52
95th Queue (ft)	67	62	35	898	929	176	261	25	104	141
Link Distance (ft)				3072	3072		1270		588	588
Upstream Blk Time (%)										
Queuing Penalty (veh)										
Storage Bay Dist (ft)			110			120		80		
Storage Blk Time (%)				37		20	14		2	
Queuing Penalty (veh)				8		25	17		0	

Intersection: 2: W Flagler St & Robert King High Park

Movement	EB	WB	WB
Directions Served	L	T	TR
Maximum Queue (ft)	31	52	52
Average Queue (ft)	18	32	16
95th Queue (ft)	43	63	51
Link Distance (ft)			
Upstream Blk Time (%)			
Queuing Penalty (veh)			
Storage Bay Dist (ft)	125		
Storage Blk Time (%)			
Queuing Penalty (veh)			

Intersection: 3: SW 96th Ave/SW 69th Ave & SW 4th St

Movement	EB	WB	NB	SB
Directions Served	LTR	LTR	LTR	LTR
Maximum Queue (ft)	90	54	73	54
Average Queue (ft)	83	48	53	39
95th Queue (ft)	98	62	75	56
Link Distance (ft)		3014	1292	1270
Upstream Blk Time (%)				
Queuing Penalty (veh)				
Storage Bay Dist (ft)				
Storage Blk Time (%)				
Queuing Penalty (veh)				

Intersection: 4: SW 70th Ave & SW 8th St

Movement	EB	EB	EB	WB	WB	WB	NB	SB	SB
Directions Served	L	T	TR	L	T	TR	LTR	LT	R
Maximum Queue (ft)	66	919	894	46	98	98	206	92	29
Average Queue (ft)	50	627	631	24	98	98	135	39	20
95th Queue (ft)	74	1132	1146	58	99	99	213	101	39
Link Distance (ft)		3123	3123				1226	77	77
Upstream Blk Time (%)								23	
Queuing Penalty (veh)								0	
Storage Bay Dist (ft)	100			45					
Storage Blk Time (%)		27		17	28				
Queuing Penalty (veh)		10		144	11				

Intersection: 5: SW 69th Ave/SW 96th Ave & SW 8th St

Movement	EB	EB	EB	WB	WB	NB	SB	SB
Directions Served	L	T	TR	L	TR	LTR	L	TR
Maximum Queue (ft)	68	68	68	30	31	47	116	95
Average Queue (ft)	48	36	25	12	11	34	48	60
95th Queue (ft)	69	75	75	36	32	51	128	104
Link Distance (ft)					4211	1226		1292
Upstream Blk Time (%)								
Queuing Penalty (veh)								
Storage Bay Dist (ft)				50			150	
Storage Blk Time (%)								
Queuing Penalty (veh)								

Intersection: 6: SW 70th Ave & SW 12th St

Movement	EB	WB	NB	SB
Directions Served	LTR	LTR	LTR	LTR
Maximum Queue (ft)	55	55	55	31
Average Queue (ft)	40	40	40	18
95th Queue (ft)	59	60	59	43
Link Distance (ft)	1190		1238	1226
Upstream Blk Time (%)				
Queuing Penalty (veh)				
Storage Bay Dist (ft)				
Storage Blk Time (%)				
Queuing Penalty (veh)				

Intersection: 7: SW 69th Ave & SW 12th St

Movement	NB	SB
Directions Served	LTR	LTR
Maximum Queue (ft)	31	53
Average Queue (ft)	25	25
95th Queue (ft)	45	54
Link Distance (ft)	625	1226
Upstream Blk Time (%)		
Queuing Penalty (veh)		
Storage Bay Dist (ft)		
Storage Blk Time (%)		
Queuing Penalty (veh)		

Intersection: 8: SW 16th St & SW 70th Ave

Movement	EB	WB	NB	SB
Directions Served	LTR	LTR	LTR	LTR
Maximum Queue (ft)	145	64	175	74
Average Queue (ft)	70	64	108	47
95th Queue (ft)	143	65	185	74
Link Distance (ft)	3532		160	1238
Upstream Blk Time (%)			7	
Queuing Penalty (veh)			0	
Storage Bay Dist (ft)				
Storage Blk Time (%)				
Queuing Penalty (veh)				

Intersection: 9: Driveway/SW 70th Ct & SW 24th St

Movement	EB	EB	WB	WB	WB	WB	NB	SB
Directions Served	T	TR	LT	T	T	R	LTR	LTR
Maximum Queue (ft)	99	75	94	84	84	27	25	22
Average Queue (ft)	78	75	82	84	83	5	5	11
95th Queue (ft)	96	75	94	86	86	24	21	27
Link Distance (ft)							400	463
Upstream Blk Time (%)								
Queuing Penalty (veh)								
Storage Bay Dist (ft)						65		
Storage Blk Time (%)					51			
Queuing Penalty (veh)					16			

Intersection: 10: SW 69th Ave & SW 24th St

Movement	EB	WB	WB	WB	NB	SB
Directions Served	LT	LT	T	R	LTR	LTR
Maximum Queue (ft)	118	89	52	47	125	53
Average Queue (ft)	61	32	10	9	64	35
95th Queue (ft)	135	98	45	40	116	50
Link Distance (ft)		5710	5710		2868	186
Upstream Blk Time (%)						
Queuing Penalty (veh)						
Storage Bay Dist (ft)				100		
Storage Blk Time (%)						
Queuing Penalty (veh)						

Intersection: 11: SW 40th St & SW 70th Ct

Movement	WB	WB	SB
Directions Served	LT	T	R
Maximum Queue (ft)	176	171	30
Average Queue (ft)	172	68	11
95th Queue (ft)	178	206	35
Link Distance (ft)			
Upstream Blk Time (%)			
Queuing Penalty (veh)			
Storage Bay Dist (ft)			90
Storage Blk Time (%)			
Queuing Penalty (veh)			

Intersection: 12: SW 40th St & SW 69th Ave

Movement	EB	EB	EB	WB	WB	NB	SB
Directions Served	L	T	TR	L	TR	R	R
Maximum Queue (ft)	67	42	42	29	25	53	113
Average Queue (ft)	53	8	14	6	5	28	73
95th Queue (ft)	65	36	44	25	21	55	131
Link Distance (ft)					4024	593	1908
Upstream Blk Time (%)	0						
Queuing Penalty (veh)	0						
Storage Bay Dist (ft)				120			
Storage Blk Time (%)							
Queuing Penalty (veh)							

Intersection: 13: SW 69th Ct & SW 56th St

Movement	EB	WB	NB
Directions Served	TR	L	LR
Maximum Queue (ft)	22	89	158
Average Queue (ft)	8	75	86
95th Queue (ft)	25	95	172
Link Distance (ft)	2182		1105
Upstream Blk Time (%)			
Queuing Penalty (veh)			
Storage Bay Dist (ft)		80	
Storage Blk Time (%)		24	
Queuing Penalty (veh)		119	

Intersection: 14: SW 69th Ave & SW 56th St

Movement	WB	NB
Directions Served	L	LR
Maximum Queue (ft)	50	31
Average Queue (ft)	28	29
95th Queue (ft)	55	32
Link Distance (ft)		676
Upstream Blk Time (%)		
Queuing Penalty (veh)		
Storage Bay Dist (ft)	80	
Storage Blk Time (%)		
Queuing Penalty (veh)		

Intersection: 15: SW 72nd St & SW 69th Ave

Movement	SB
Directions Served	LR
Maximum Queue (ft)	51
Average Queue (ft)	23
95th Queue (ft)	55
Link Distance (ft)	2524
Upstream Blk Time (%)	
Queuing Penalty (veh)	
Storage Bay Dist (ft)	
Storage Blk Time (%)	
Queuing Penalty (veh)	

Intersection: 16: SW 70th Ave & SW 80th St

Movement	EB	WB	WB	NB	NB	NB
Directions Served	TR	L	T	L	L	R
Maximum Queue (ft)	47	53	91	70	373	397
Average Queue (ft)	47	44	49	39	360	383
95th Queue (ft)	47	62	95	71	390	402
Link Distance (ft)		1708	1708	358	358	358
Upstream Blk Time (%)	1				64	100
Queuing Penalty (veh)	0				0	0
Storage Bay Dist (ft)						
Storage Blk Time (%)						
Queuing Penalty (veh)						

Intersection: 17: SW 16th St & SW 69th Ave

Movement	EB	SB
Directions Served	LT	LR
Maximum Queue (ft)	53	32
Average Queue (ft)	17	18
95th Queue (ft)	53	43
Link Distance (ft)		561
Upstream Blk Time (%)		
Queuing Penalty (veh)		
Storage Bay Dist (ft)		
Storage Blk Time (%)		
Queuing Penalty (veh)		

Intersection: 18: SW 72nd St & SW 70th Ave

Movement	SB
Directions Served	LR
Maximum Queue (ft)	26
Average Queue (ft)	5
95th Queue (ft)	23
Link Distance (ft)	528
Upstream Blk Time (%)	
Queuing Penalty (veh)	
Storage Bay Dist (ft)	
Storage Blk Time (%)	
Queuing Penalty (veh)	

Intersection: 19: SW 60th St & SW 69th Ave

Movement	EB	SB
Directions Served	LTR	LTR
Maximum Queue (ft)	73	118
Average Queue (ft)	58	81
95th Queue (ft)	70	122
Link Distance (ft)		557
Upstream Blk Time (%)		
Queuing Penalty (veh)		
Storage Bay Dist (ft)		
Storage Blk Time (%)		
Queuing Penalty (veh)		

Zone Summary

Zone wide Queuing Penalty: 350

SimTraffic Queue Analysis – Future Condition – PM

Intersection: 1: SW 69th Ave/NW 69th Ave & W Flagler St

Movement	EB	EB	WB	WB	WB	NB	NB	SB	SB	SB
Directions Served	LT	TR	L	T	TR	L	TR	L	T	R
Maximum Queue (ft)	63	63	70	909	998	145	336	16	157	442
Average Queue (ft)	61	60	30	569	595	127	201	3	96	236
95th Queue (ft)	67	69	68	984	1048	162	371	14	168	414
Link Distance (ft)				3072	3072		1270		588	588
Upstream Blk Time (%)										
Queuing Penalty (veh)										
Storage Bay Dist (ft)			110			120		80		
Storage Blk Time (%)				31		30	17		25	
Queuing Penalty (veh)				15		29	25		2	

Intersection: 2: W Flagler St & Robert King High Park

Movement	EB	EB	WB	WB	SB
Directions Served	L	T	T	TR	LR
Maximum Queue (ft)	31	55	52	30	27
Average Queue (ft)	18	11	31	17	11
95th Queue (ft)	42	47	72	41	32
Link Distance (ft)		2160			198
Upstream Blk Time (%)					
Queuing Penalty (veh)					
Storage Bay Dist (ft)	125				
Storage Blk Time (%)					
Queuing Penalty (veh)					

Intersection: 3: SW 96th Ave/SW 69th Ave & SW 4th St

Movement	EB	WB	NB	SB
Directions Served	LTR	LTR	LTR	LTR
Maximum Queue (ft)	108	382	111	212
Average Queue (ft)	80	235	69	118
95th Queue (ft)	104	384	106	232
Link Distance (ft)		3014	1292	1270
Upstream Blk Time (%)	1			
Queuing Penalty (veh)	0			
Storage Bay Dist (ft)				
Storage Blk Time (%)				
Queuing Penalty (veh)				

Intersection: 4: SW 70th Ave & SW 8th St

Movement	EB	EB	EB	WB	WB	WB	NB	SB	SB
Directions Served	L	T	TR	L	T	TR	LTR	LT	R
Maximum Queue (ft)	84	597	616	66	98	102	182	92	69
Average Queue (ft)	48	486	510	51	97	99	152	84	46
95th Queue (ft)	91	712	739	72	102	101	190	101	89
Link Distance (ft)		3123	3123				1226	77	77
Upstream Blk Time (%)								26	1
Queuing Penalty (veh)								0	0
Storage Bay Dist (ft)	100			45					
Storage Blk Time (%)	0	39		33	46				
Queuing Penalty (veh)	1	31		291	23				

Intersection: 5: SW 69th Ave/SW 96th Ave & SW 8th St

Movement	EB	EB	EB	WB	NB	SB	SB
Directions Served	L	T	TR	L	LTR	L	TR
Maximum Queue (ft)	68	68	29	30	270	28	92
Average Queue (ft)	50	24	12	6	171	6	49
95th Queue (ft)	73	65	35	26	327	24	102
Link Distance (ft)					1226		1292
Upstream Blk Time (%)							
Queuing Penalty (veh)							
Storage Bay Dist (ft)				50		150	
Storage Blk Time (%)							
Queuing Penalty (veh)							

Intersection: 6: SW 70th Ave & SW 12th St

Movement	EB	WB	NB	SB
Directions Served	LTR	LTR	LTR	LTR
Maximum Queue (ft)	56	102	53	47
Average Queue (ft)	44	75	28	33
95th Queue (ft)	62	115	56	45
Link Distance (ft)	1190		1238	1226
Upstream Blk Time (%)				
Queuing Penalty (veh)				
Storage Bay Dist (ft)				
Storage Blk Time (%)				
Queuing Penalty (veh)				

Intersection: 7: SW 69th Ave & SW 12th St

Movement	NB	SB
Directions Served	LTR	LTR
Maximum Queue (ft)	72	54
Average Queue (ft)	47	43
95th Queue (ft)	73	61
Link Distance (ft)	625	1226
Upstream Blk Time (%)		
Queuing Penalty (veh)		
Storage Bay Dist (ft)		
Storage Blk Time (%)		
Queuing Penalty (veh)		

Intersection: 8: SW 16th St & SW 70th Ave

Movement	EB	WB	NB	SB
Directions Served	LTR	LTR	LTR	LTR
Maximum Queue (ft)	71	64	92	52
Average Queue (ft)	41	64	52	33
95th Queue (ft)	71	65	97	64
Link Distance (ft)	3532		160	1238
Upstream Blk Time (%)				
Queuing Penalty (veh)				
Storage Bay Dist (ft)				
Storage Blk Time (%)				
Queuing Penalty (veh)				

Intersection: 9: Driveway/SW 70th Ct & SW 24th St

Movement	EB	EB	EB	WB	WB	WB	NB	SB
Directions Served	L	T	TR	LT	T	T	LTR	LTR
Maximum Queue (ft)	24	75	75	84	84	84	24	44
Average Queue (ft)	5	75	74	82	82	83	18	15
95th Queue (ft)	20	75	75	85	87	86	29	41
Link Distance (ft)							400	463
Upstream Blk Time (%)								
Queuing Penalty (veh)								
Storage Bay Dist (ft)								
Storage Blk Time (%)						51		
Queuing Penalty (veh)						15		

Intersection: 10: SW 69th Ave & SW 24th St

Movement	EB	EB	WB	NB	SB
Directions Served	LT	T	R	LTR	LTR
Maximum Queue (ft)	106	99	21	210	72
Average Queue (ft)	96	26	8	79	42
95th Queue (ft)	129	89	25	199	69
Link Distance (ft)				2868	186
Upstream Blk Time (%)					
Queuing Penalty (veh)					
Storage Bay Dist (ft)			100		
Storage Blk Time (%)		0			
Queuing Penalty (veh)		0			

Intersection: 11: SW 40th St & SW 70th Ct

Movement	EB	WB	WB
Directions Served	L	LT	T
Maximum Queue (ft)	30	200	176
Average Queue (ft)	6	75	71
95th Queue (ft)	26	228	213
Link Distance (ft)			
Upstream Blk Time (%)			
Queuing Penalty (veh)			
Storage Bay Dist (ft)	50		
Storage Blk Time (%)	0		
Queuing Penalty (veh)	0		

Intersection: 12: SW 40th St & SW 69th Ave

Movement	EB	EB	EB	EB	WB	NB	SB
Directions Served	L	T	T	TR	L	R	R
Maximum Queue (ft)	50	50	29	29	69	52	80
Average Queue (ft)	31	21	11	11	20	28	53
95th Queue (ft)	61	53	34	34	65	56	88
Link Distance (ft)						593	1908
Upstream Blk Time (%)							
Queuing Penalty (veh)							
Storage Bay Dist (ft)					120		
Storage Blk Time (%)							
Queuing Penalty (veh)							

Intersection: 13: SW 69th Ct & SW 56th St

Movement	WB	NB
Directions Served	L	LR
Maximum Queue (ft)	31	74
Average Queue (ft)	18	43
95th Queue (ft)	43	72
Link Distance (ft)		1105
Upstream Blk Time (%)		
Queuing Penalty (veh)		
Storage Bay Dist (ft)	80	
Storage Blk Time (%)		
Queuing Penalty (veh)		

Intersection: 14: SW 69th Ave & SW 56th St

Movement	WB	NB
Directions Served	L	LR
Maximum Queue (ft)	30	52
Average Queue (ft)	6	33
95th Queue (ft)	26	49
Link Distance (ft)		676
Upstream Blk Time (%)		
Queuing Penalty (veh)		
Storage Bay Dist (ft)	80	
Storage Blk Time (%)		
Queuing Penalty (veh)		

Intersection: 15: SW 72nd St & SW 69th Ave

Movement	EB	SB
Directions Served	L	LR
Maximum Queue (ft)	31	77
Average Queue (ft)	24	56
95th Queue (ft)	43	81
Link Distance (ft)		2524
Upstream Blk Time (%)		
Queuing Penalty (veh)		
Storage Bay Dist (ft)	135	
Storage Blk Time (%)		
Queuing Penalty (veh)		

Intersection: 16: SW 70th Ave & SW 80th St

Movement	EB	WB	WB	NB	NB	NB
Directions Served	TR	L	T	L	L	R
Maximum Queue (ft)	47	98	132	162	152	373
Average Queue (ft)	47	78	85	142	89	282
95th Queue (ft)	47	106	152	182	191	424
Link Distance (ft)		1708	1708	358	358	358
Upstream Blk Time (%)	1					16
Queuing Penalty (veh)	0					0
Storage Bay Dist (ft)						
Storage Blk Time (%)						
Queuing Penalty (veh)						

Intersection: 17: SW 16th St & SW 69th Ave

Movement	EB	SB
Directions Served	LT	LR
Maximum Queue (ft)	51	31
Average Queue (ft)	28	24
95th Queue (ft)	55	44
Link Distance (ft)		561
Upstream Blk Time (%)		
Queuing Penalty (veh)		
Storage Bay Dist (ft)		
Storage Blk Time (%)		
Queuing Penalty (veh)		

Intersection: 18: SW 72nd St & SW 70th Ave

Movement	SB
Directions Served	LR
Maximum Queue (ft)	73
Average Queue (ft)	53
95th Queue (ft)	90
Link Distance (ft)	528
Upstream Blk Time (%)	
Queuing Penalty (veh)	
Storage Bay Dist (ft)	
Storage Blk Time (%)	
Queuing Penalty (veh)	

Intersection: 19: SW 60th St & SW 69th Ave

Movement	EB	WB	SB
Directions Served	LTR	LTR	LTR
Maximum Queue (ft)	30	89	54
Average Queue (ft)	30	52	23
95th Queue (ft)	31	87	57
Link Distance (ft)		1123	557
Upstream Blk Time (%)			
Queuing Penalty (veh)			
Storage Bay Dist (ft)			
Storage Blk Time (%)			
Queuing Penalty (veh)			

Zone Summary

Zone wide Queuing Penalty: 431

Appendix I – Surrogate Trail Data Collection

Location Name S Dixie Hwy/Ponce De l
Start Date: Tuesday 9/18/2018
Start Time: 7.00 am

	Northbound		Southbound	
Start Time	Peds	Bikes	Peds	Bikes
7:00 AM		2		
7:15 AM		1		2
7:30 AM		4	1	
7:45 AM	1	3		2
8:00 AM	1	5	1	
8:15 AM	2	5		2
8:30 AM		3	3	
8:45 AM		4	4	4
9:00 AM		2	3	
9:15 AM	1	6		1
9:30 AM	1	2	1	1
9:45 AM				
10:00 AM		3		1
10:15 AM		2		1
10:30 AM	1	4		1
10:45 AM	1	1		3
11:00 AM				2
11:15 AM	1	1		
11:30 AM		1	1	
11:45 AM	3	2		1
12:00 PM		3	1	1
12:15 PM		5	1	
12:30 PM	1		5	4
12:45 PM	1	2		3
1:00 PM	2			
1:15 PM		1	1	1
1:30 PM		4		1
1:45 PM		1		3
2:00 PM	1	1		2
2:15 PM		2		
2:30 PM		1	2	1
2:45 PM		1		
3:00 PM		2		1
3:15 PM				

	Northbound		Southbound	
Start Time	Peds	Bikes	Peds	Bikes
3:30 PM		2		1
3:45 PM		1		2
4:00 PM	3	3		1
4:15 PM	1	1		3
4:30 PM		5		1
4:45 PM		2	1	5
5:00 PM		2		7
5:15 PM	1	3	1	1
5:30 PM		1	1	3
5:45 PM		2		5
6:00 PM	1	1	1	3
6:15 PM	1	1	3	5
6:30 PM	3		1	2
6:45 PM		1	1	2

Location Name
Start Date:
Start Time:

	Bike Lane	
	Northbound	Southbound
Start Time	Bikes	Bikes
7:00 AM	1	2
7:15 AM		2
7:30 AM	1	
7:45 AM	3	
8:00 AM	3	
8:15 AM	2	
8:30 AM	1	1
8:45 AM	2	2
9:00 AM	1	1
9:15 AM	2	2
9:30 AM	1	2
9:45 AM	1	3
10:00 AM	2	1
10:15 AM	2	2
10:30 AM	1	1
10:45 AM		2
11:00 AM	3	3
11:15 AM	4	
11:30 AM		1
11:45 AM	2	4
12:00 PM	1	1
12:15 PM		
12:30 PM	1	2
12:45 PM	1	
1:00 PM		1
1:15 PM	4	1
1:30 PM		
1:45 PM	1	3
2:00 PM		1
2:15 PM	3	
2:30 PM		1
2:45 PM	1	2
3:00 PM	1	1

	Northbound	Southbound
Start Time	Bikes	Bikes
3:15 PM		
3:30 PM	1	
3:45 PM	3	
4:00 PM	1	1
4:15 PM	2	1
4:30 PM		1
4:45 PM	1	
5:00 PM		
5:15 PM		
5:30 PM	1	
5:45 PM	1	1
6:00 PM	2	2
6:15 PM		1
6:30 PM	1	1
6:45 PM	2	1

Appendix J – Strava Data around Ludlam Trail

CNTYNM	YEAR	MODE	TACTCNT
Miami-Dade	2014	Run	2
Miami-Dade	2014	Run	4
Miami-Dade	2014	Run	4
Miami-Dade	2014	Run	29
Miami-Dade	2014	Run	48
Miami-Dade	2014	Run	48
Miami-Dade	2014	Run	6
Miami-Dade	2014	Run	6
Miami-Dade	2014	Run	1
Miami-Dade	2014	Run	13
Miami-Dade	2014	Run	23
Miami-Dade	2014	Run	17
Miami-Dade	2014	Run	11
Miami-Dade	2014	Run	2
Miami-Dade	2014	Run	3
Miami-Dade	2014	Run	3
Miami-Dade	2014	Run	3
Miami-Dade	2014	Run	2
Miami-Dade	2014	Run	2
Miami-Dade	2014	Run	2
Miami-Dade	2014	Run	2
Miami-Dade	2014	Run	2
Miami-Dade	2014	Run	2
Miami-Dade	2014	Run	2
Miami-Dade	2014	Run	2
Miami-Dade	2014	Run	1
Miami-Dade	2014	Run	3
Miami-Dade	2014	Run	3
Miami-Dade	2014	Run	3
Miami-Dade	2014	Run	2
Miami-Dade	2014	Run	3
Miami-Dade	2014	Run	2
Miami-Dade	2014	Run	2
Miami-Dade	2014	Run	3
Miami-Dade	2014	Run	3
Miami-Dade	2014	Run	2
Miami-Dade	2014	Run	2
Miami-Dade	2014	Run	2
Miami-Dade	2014	Run	3
Miami-Dade	2014	Run	3
Miami-Dade	2014	Run	2
Miami-Dade	2014	Run	3
Miami-Dade	2014	Run	3
Miami-Dade	2014	Run	2
Miami-Dade	2014	Run	2
Miami-Dade	2014	Run	2
Miami-Dade	2014	Run	2
Miami-Dade	2014	Run	2
Miami-Dade	2014	Run	1

CNTYNM	YEAR	MODE	TACTCNT
Miami-Dade	2014	Run	1
Miami-Dade	2014	Run	1
Miami-Dade	2014	Run	1
Miami-Dade	2014	Run	3
Miami-Dade	2014	Run	1
Miami-Dade	2014	Run	1
Miami-Dade	2014	Run	3
Miami-Dade	2014	Run	1
Miami-Dade	2014	Run	1
Miami-Dade	2014	Run	1
Miami-Dade	2014	Run	3
Miami-Dade	2014	Run	1
Miami-Dade	2014	Run	1
Miami-Dade	2014	Run	1
Miami-Dade	2014	Run	3
Miami-Dade	2014	Run	1
Miami-Dade	2014	Run	1
Miami-Dade	2014	Run	2
Miami-Dade	2014	Run	1
Miami-Dade	2014	Run	1
Miami-Dade	2014	Run	2
Miami-Dade	2014	Run	1
Miami-Dade	2014	Run	2
Miami-Dade	2014	Run	1
Miami-Dade	2014	Run	2
Miami-Dade	2014	Run	1
Miami-Dade	2014	Run	1
Miami-Dade	2014	Run	1
Miami-Dade	2014	Run	2
Miami-Dade	2014	Run	4
Miami-Dade	2014	Run	4
Miami-Dade	2014	Run	3
Miami-Dade	2014	Run	3
Miami-Dade	2014	Run	3
Miami-Dade	2014	Run	2
Miami-Dade	2014	Run	3
Miami-Dade	2014	Run	2
Miami-Dade	2014	Run	2
Miami-Dade	2014	Run	2
Miami-Dade	2014	Run	2
Miami-Dade	2014	Run	2
Miami-Dade	2014	Run	2
Miami-Dade	2014	Run	2
Miami-Dade	2014	Run	1
Miami-Dade	2014	Run	1
Miami-Dade	2014	Run	2
Miami-Dade	2014	Run	1
Miami-Dade	2014	Run	1
Miami-Dade	2014	Run	1
Miami-Dade	2014	Run	2

CNTYNM	YEAR	MODE	TACTCNT
Miami-Dade	2014	Run	1
Miami-Dade	2014	Run	1
Miami-Dade	2014	Run	1
Miami-Dade	2014	Run	1
Miami-Dade	2014	Run	3
Miami-Dade	2014	Run	2
Miami-Dade	2014	Run	4
Miami-Dade	2014	Run	2
Miami-Dade	2014	Run	3
Miami-Dade	2014	Run	1
Miami-Dade	2014	Run	4
Miami-Dade	2014	Run	1
Miami-Dade	2014	Run	4
Miami-Dade	2014	Run	4
Miami-Dade	2014	Run	1
Miami-Dade	2014	Run	1
Miami-Dade	2014	Run	2
Miami-Dade	2014	Run	4
Miami-Dade	2014	Run	1
Miami-Dade	2014	Run	1
Miami-Dade	2014	Run	2
Miami-Dade	2014	Run	2
Miami-Dade	2014	Run	4
Miami-Dade	2014	Run	1
Miami-Dade	2014	Run	1
Miami-Dade	2014	Run	2
Miami-Dade	2014	Run	2
Miami-Dade	2014	Run	2
Miami-Dade	2014	Run	4
Miami-Dade	2014	Run	4
Miami-Dade	2014	Run	4
Miami-Dade	2014	Run	4
Miami-Dade	2014	Run	4
Miami-Dade	2014	Run	1
Miami-Dade	2014	Run	2
Miami-Dade	2014	Run	2
Miami-Dade	2014	Run	2
Miami-Dade	2014	Run	2
Miami-Dade	2014	Run	4
Miami-Dade	2014	Run	3
Miami-Dade	2014	Run	1
Miami-Dade	2014	Run	2
Miami-Dade	2014	Run	3
Miami-Dade	2014	Run	3
Miami-Dade	2014	Run	1
Miami-Dade	2014	Run	1
Miami-Dade	2014	Run	1
Miami-Dade	2014	Run	1
Miami-Dade	2014	Run	2
Miami-Dade	2014	Run	3

CNTYNM	YEAR	MODE	TACTCNT
Miami-Dade	2014	Run	1
Miami-Dade	2014	Run	1
Miami-Dade	2014	Run	1
Miami-Dade	2014	Run	3
Miami-Dade	2014	Run	1
Miami-Dade	2014	Run	1
Miami-Dade	2014	Run	3
Miami-Dade	2014	Run	1
Miami-Dade	2014	Run	1
Miami-Dade	2014	Run	1
Miami-Dade	2014	Run	3
Miami-Dade	2014	Run	1
Miami-Dade	2014	Run	1
Miami-Dade	2014	Run	1
Miami-Dade	2014	Run	3
Miami-Dade	2014	Run	1
Miami-Dade	2014	Run	1
Miami-Dade	2014	Run	2
Miami-Dade	2014	Run	1
Miami-Dade	2014	Run	1
Miami-Dade	2014	Run	2
Miami-Dade	2014	Run	1
Miami-Dade	2014	Run	2
Miami-Dade	2014	Run	1
Miami-Dade	2014	Run	2
Miami-Dade	2014	Run	1
Miami-Dade	2014	Run	1
Miami-Dade	2014	Run	2
Miami-Dade	2014	Run	3
Miami-Dade	2014	Run	2
Miami-Dade	2014	Run	2
Miami-Dade	2014	Run	2
Miami-Dade	2014	Run	2
Miami-Dade	2014	Run	2
Miami-Dade	2014	Run	2
Miami-Dade	2014	Run	2
Miami-Dade	2014	Run	2
Miami-Dade	2014	Run	1
Miami-Dade	2014	Run	1
Miami-Dade	2014	Run	2
Miami-Dade	2014	Run	1
Miami-Dade	2014	Run	1
Miami-Dade	2014	Run	1
Miami-Dade	2014	Run	2

CNTYNM	YEAR	MODE	TACTCNT
Miami-Dade	2014	Run	3
Miami-Dade	2014	Run	3
Miami-Dade	2014	Run	1
Miami-Dade	2014	Run	2
Miami-Dade	2014	Run	1
Miami-Dade	2014	Run	3
Miami-Dade	2014	Run	2
Miami-Dade	2014	Run	3
Miami-Dade	2014	Run	2
Miami-Dade	2014	Run	1
Miami-Dade	2014	Run	1
Miami-Dade	2014	Run	5
Miami-Dade	2014	Run	1
Miami-Dade	2014	Run	1
Miami-Dade	2014	Run	9
Miami-Dade	2014	Run	1
Miami-Dade	2014	Run	2
Miami-Dade	2014	Run	1
Miami-Dade	2014	Run	3
Miami-Dade	2014	Run	3
Miami-Dade	2014	Run	5
Miami-Dade	2014	Run	5
Miami-Dade	2014	Run	3
Miami-Dade	2014	Run	6
Miami-Dade	2014	Run	6
Miami-Dade	2014	Run	5
Miami-Dade	2014	Run	5
Miami-Dade	2014	Run	5
Miami-Dade	2014	Run	1
Miami-Dade	2014	Run	1
Miami-Dade	2014	Run	8
Miami-Dade	2014	Run	3
Miami-Dade	2014	Run	5
Miami-Dade	2014	Run	3
Miami-Dade	2014	Run	9
Miami-Dade	2014	Run	2
Miami-Dade	2014	Run	8
Miami-Dade	2014	Run	9
Miami-Dade	2014	Run	9
Miami-Dade	2014	Run	2
Miami-Dade	2014	Run	9
Miami-Dade	2014	Run	8
Miami-Dade	2014	Run	1
Miami-Dade	2014	Run	8
Miami-Dade	2014	Run	1
Miami-Dade	2014	Run	1
Miami-Dade	2014	Run	1
Miami-Dade	2014	Run	1
Miami-Dade	2014	Run	9
Miami-Dade	2014	Run	8

CNTYNM	YEAR	MODE	TACTCNT
Miami-Dade	2014	Run	8
Miami-Dade	2014	Run	1
Miami-Dade	2014	Run	1
Miami-Dade	2014	Run	9
Miami-Dade	2014	Run	8
Miami-Dade	2014	Run	8
Miami-Dade	2014	Run	1
Miami-Dade	2014	Run	1
Miami-Dade	2014	Run	3
Miami-Dade	2014	Run	10
Miami-Dade	2014	Run	2
Miami-Dade	2014	Run	8
Miami-Dade	2014	Run	1
Miami-Dade	2014	Run	1
Miami-Dade	2014	Run	1
Miami-Dade	2014	Run	11
Miami-Dade	2014	Run	2
Miami-Dade	2014	Run	1
Miami-Dade	2014	Run	1
Miami-Dade	2014	Run	1
Miami-Dade	2014	Run	1
Miami-Dade	2014	Run	1
Miami-Dade	2014	Run	9
Miami-Dade	2014	Run	1
Miami-Dade	2014	Run	11
Miami-Dade	2014	Run	6
Miami-Dade	2014	Run	10
Miami-Dade	2014	Run	2
Miami-Dade	2014	Run	9
Miami-Dade	2014	Run	2
Miami-Dade	2014	Run	10
Miami-Dade	2014	Run	12
Miami-Dade	2014	Run	4
Miami-Dade	2014	Run	9
Miami-Dade	2014	Run	1
Miami-Dade	2014	Run	2
Miami-Dade	2014	Run	10
Miami-Dade	2014	Run	3
Miami-Dade	2014	Run	3
Miami-Dade	2014	Run	4
Miami-Dade	2014	Run	3
Miami-Dade	2014	Run	1
Miami-Dade	2014	Run	12
Miami-Dade	2014	Run	2
Miami-Dade	2014	Run	9
Miami-Dade	2014	Run	1
Miami-Dade	2014	Run	1
Miami-Dade	2014	Run	12
Miami-Dade	2014	Run	1
Miami-Dade	2014	Run	2
Miami-Dade	2014	Run	10

CNTYNM	YEAR	MODE	TACTCNT
Miami-Dade	2014	Run	12
Miami-Dade	2014	Run	1
Miami-Dade	2014	Run	4
Miami-Dade	2014	Run	3
Miami-Dade	2014	Run	3
Miami-Dade	2014	Run	1
Miami-Dade	2014	Run	12
Miami-Dade	2014	Run	1
Miami-Dade	2014	Run	8
Miami-Dade	2014	Run	3
Miami-Dade	2014	Run	30
Miami-Dade	2014	Run	8
Miami-Dade	2014	Run	1
Miami-Dade	2014	Run	12
Miami-Dade	2014	Run	8
Miami-Dade	2014	Run	22
Miami-Dade	2014	Run	3
Miami-Dade	2014	Run	10
Miami-Dade	2014	Run	2
Miami-Dade	2014	Run	8
Miami-Dade	2014	Run	2
Miami-Dade	2014	Run	29
Miami-Dade	2014	Run	29
Miami-Dade	2014	Run	25
Miami-Dade	2014	Run	11
Miami-Dade	2014	Run	1
Miami-Dade	2014	Run	1
Miami-Dade	2014	Run	19
Miami-Dade	2014	Run	3
Miami-Dade	2014	Run	1
Miami-Dade	2014	Run	1
Miami-Dade	2014	Run	3
Miami-Dade	2014	Run	3
Miami-Dade	2014	Run	1
Miami-Dade	2014	Run	16
Miami-Dade	2014	Run	1
Miami-Dade	2014	Run	15
Miami-Dade	2014	Run	1
Miami-Dade	2014	Run	15
Miami-Dade	2014	Run	4
Miami-Dade	2014	Run	1
Miami-Dade	2014	Run	1
Miami-Dade	2014	Run	15
Miami-Dade	2014	Run	2
Miami-Dade	2014	Run	1
Miami-Dade	2014	Run	2
Miami-Dade	2014	Run	4
Miami-Dade	2014	Run	1
Miami-Dade	2014	Run	36
Miami-Dade	2014	Run	32
Miami-Dade	2014	Run	30

CNTYNM	YEAR	MODE	TACTCNT
Miami-Dade	2014	Run	4
Miami-Dade	2014	Run	29
Miami-Dade	2014	Run	28
Miami-Dade	2014	Run	28
Miami-Dade	2014	Run	25
Miami-Dade	2014	Run	24
Miami-Dade	2014	Run	24
Miami-Dade	2014	Run	1
Miami-Dade	2014	Run	23
Miami-Dade	2014	Run	22
Miami-Dade	2014	Run	2
Miami-Dade	2014	Run	2
Miami-Dade	2014	Run	1
Miami-Dade	2014	Run	3
Miami-Dade	2014	Run	3
Miami-Dade	2014	Run	1
Miami-Dade	2014	Run	3
Miami-Dade	2014	Run	1
Miami-Dade	2014	Run	4
Miami-Dade	2014	Run	3
Miami-Dade	2014	Run	1
Miami-Dade	2014	Run	1
Miami-Dade	2014	Run	49
Miami-Dade	2014	Run	1
Miami-Dade	2014	Run	2
Miami-Dade	2014	Run	3
Miami-Dade	2014	Run	18
Miami-Dade	2014	Run	1
Miami-Dade	2014	Run	4
Miami-Dade	2014	Run	5
Miami-Dade	2014	Run	1
Miami-Dade	2014	Run	2
Miami-Dade	2014	Run	7
Miami-Dade	2014	Run	1
Miami-Dade	2014	Run	4
Miami-Dade	2014	Run	8
Miami-Dade	2014	Run	8
Miami-Dade	2014	Run	3
Miami-Dade	2014	Run	52
Miami-Dade	2014	Run	22
Miami-Dade	2014	Run	17
Miami-Dade	2014	Run	1
Miami-Dade	2014	Run	4
Miami-Dade	2014	Run	12
Miami-Dade	2014	Run	61
Miami-Dade	2014	Run	2
Miami-Dade	2014	Run	30
Miami-Dade	2014	Run	44
Miami-Dade	2014	Run	14
Miami-Dade	2014	Run	1
Miami-Dade	2014	Run	63

CNTYNM	YEAR	MODE	TACTCNT
Miami-Dade	2014	Run	1
Miami-Dade	2014	Run	23
Miami-Dade	2014	Run	16
Miami-Dade	2014	Run	1
Miami-Dade	2014	Run	63
Miami-Dade	2014	Run	3
Miami-Dade	2014	Run	55
Miami-Dade	2014	Run	57
Miami-Dade	2014	Run	57
Miami-Dade	2014	Run	21
Miami-Dade	2014	Run	60
Miami-Dade	2014	Run	45
Miami-Dade	2014	Run	16
Miami-Dade	2014	Run	3
Miami-Dade	2014	Run	10
Miami-Dade	2014	Run	15
Miami-Dade	2014	Run	63
Miami-Dade	2014	Run	2
Miami-Dade	2014	Run	2
Miami-Dade	2014	Run	2
Miami-Dade	2014	Run	6
Miami-Dade	2014	Run	25
Miami-Dade	2014	Run	36
Miami-Dade	2014	Run	5
Miami-Dade	2014	Run	16
Miami-Dade	2014	Run	65
Miami-Dade	2014	Run	26
Miami-Dade	2014	Run	65
Miami-Dade	2014	Run	2
Miami-Dade	2014	Run	3
Miami-Dade	2014	Run	62
Miami-Dade	2014	Run	17
Miami-Dade	2014	Run	2
Miami-Dade	2014	Run	18
Miami-Dade	2014	Run	18
Miami-Dade	2014	Run	21
Miami-Dade	2014	Run	51
Miami-Dade	2014	Run	11
Miami-Dade	2014	Run	23
Miami-Dade	2014	Run	28
Miami-Dade	2014	Run	61
Miami-Dade	2014	Run	21
Miami-Dade	2014	Run	11
Miami-Dade	2014	Run	44
Miami-Dade	2014	Run	11
Miami-Dade	2014	Run	12
Miami-Dade	2014	Run	12
Miami-Dade	2014	Run	45
Miami-Dade	2014	Run	5
Miami-Dade	2014	Run	50
Miami-Dade	2014	Run	8

CNTYNM	YEAR	MODE	TACTCNT
Miami-Dade	2014	Run	1
Miami-Dade	2014	Run	5
Miami-Dade	2014	Run	47
Miami-Dade	2014	Run	9
Miami-Dade	2014	Run	12
Miami-Dade	2014	Run	2
Miami-Dade	2014	Run	44
Miami-Dade	2014	Run	4
Miami-Dade	2014	Run	41
Miami-Dade	2014	Run	40
Miami-Dade	2014	Run	2
Miami-Dade	2014	Run	23
Miami-Dade	2014	Run	4
Miami-Dade	2014	Run	45
Miami-Dade	2014	Run	40
Miami-Dade	2014	Run	10
Miami-Dade	2014	Run	8
Miami-Dade	2014	Run	2
Miami-Dade	2014	Run	4
Miami-Dade	2014	Run	40
Miami-Dade	2014	Run	42
Miami-Dade	2014	Run	19
Miami-Dade	2014	Run	41
Miami-Dade	2014	Run	42
Miami-Dade	2014	Run	1
Miami-Dade	2014	Run	53
Miami-Dade	2014	Run	2
Miami-Dade	2014	Run	54
Miami-Dade	2014	Run	50
Miami-Dade	2014	Run	49
Miami-Dade	2014	Run	64
Miami-Dade	2014	Run	64
Miami-Dade	2014	Run	61
Miami-Dade	2014	Run	55
Miami-Dade	2014	Run	59
Miami-Dade	2014	Run	61
Miami-Dade	2014	Run	63
Miami-Dade	2014	Run	29
Miami-Dade	2014	Run	2
Miami-Dade	2014	Run	6
Miami-Dade	2014	Run	8
Miami-Dade	2014	Run	2
Miami-Dade	2014	Run	30
Miami-Dade	2014	Run	1
Miami-Dade	2014	Run	2
Miami-Dade	2014	Run	37
Miami-Dade	2014	Run	2
Miami-Dade	2014	Run	2
Miami-Dade	2014	Run	2
Miami-Dade	2014	Run	1
Miami-Dade	2014	Run	1

CNTYNM	YEAR	MODE	TACTCNT
Miami-Dade	2014	Run	1
Miami-Dade	2014	Run	3
Miami-Dade	2014	Run	15
Miami-Dade	2014	Run	4
Miami-Dade	2014	Run	28
Miami-Dade	2014	Run	39
Miami-Dade	2014	Run	4
Miami-Dade	2014	Run	1
Miami-Dade	2014	Run	1
Miami-Dade	2014	Run	7
Miami-Dade	2014	Run	6
Miami-Dade	2014	Run	3
Miami-Dade	2014	Run	55
Miami-Dade	2014	Run	1
Miami-Dade	2014	Run	1
Miami-Dade	2014	Run	1
Miami-Dade	2014	Run	1
Miami-Dade	2014	Run	4
Miami-Dade	2014	Run	1
Miami-Dade	2014	Run	8
Miami-Dade	2014	Run	4
Miami-Dade	2014	Run	2
Miami-Dade	2014	Run	1
Miami-Dade	2014	Run	51
Miami-Dade	2014	Run	52
Miami-Dade	2014	Run	1
Miami-Dade	2014	Run	1
Miami-Dade	2014	Run	1
Miami-Dade	2014	Run	52
Miami-Dade	2014	Run	2
Miami-Dade	2014	Run	2
Miami-Dade	2014	Run	4
Miami-Dade	2014	Run	53
Miami-Dade	2014	Run	1
Miami-Dade	2014	Run	2
Miami-Dade	2014	Run	2
Miami-Dade	2014	Run	2
Miami-Dade	2014	Run	2
Miami-Dade	2014	Run	5
Miami-Dade	2014	Run	1
Miami-Dade	2014	Run	1
Miami-Dade	2014	Run	4
Miami-Dade	2014	Run	2
Miami-Dade	2014	Run	2
Miami-Dade	2014	Run	57
Miami-Dade	2014	Run	1
Miami-Dade	2014	Run	57
Miami-Dade	2014	Run	1
Miami-Dade	2014	Run	1
Miami-Dade	2014	Run	1
Miami-Dade	2014	Run	1

CNTYNM	YEAR	MODE	TACTCNT
Miami-Dade	2014	Run	56
Miami-Dade	2014	Run	3
Miami-Dade	2014	Run	2
Miami-Dade	2014	Run	1
Miami-Dade	2014	Run	1
Miami-Dade	2014	Run	1
Miami-Dade	2014	Run	3
Miami-Dade	2014	Run	2
Miami-Dade	2014	Run	1
Miami-Dade	2014	Run	5
Miami-Dade	2014	Run	58
Miami-Dade	2014	Run	2
Miami-Dade	2014	Run	4
Miami-Dade	2014	Run	58
Miami-Dade	2014	Run	2
Miami-Dade	2014	Run	58
Miami-Dade	2014	Run	8
Miami-Dade	2014	Run	15
Miami-Dade	2014	Run	60
Miami-Dade	2014	Run	61
Miami-Dade	2014	Run	8
Miami-Dade	2014	Run	8
Miami-Dade	2014	Run	15
Miami-Dade	2014	Run	65
Miami-Dade	2014	Run	67
Miami-Dade	2014	Run	64
Miami-Dade	2014	Run	1
Miami-Dade	2014	Run	43
Miami-Dade	2014	Run	41
Miami-Dade	2014	Run	36
Miami-Dade	2014	Run	9
Miami-Dade	2014	Run	47
Miami-Dade	2014	Run	7
Miami-Dade	2014	Run	40
Miami-Dade	2014	Run	7
Miami-Dade	2014	Run	37
Miami-Dade	2014	Run	11
Miami-Dade	2014	Run	35
Miami-Dade	2014	Run	1
Miami-Dade	2014	Run	3
Miami-Dade	2014	Run	3
Miami-Dade	2014	Run	8
Miami-Dade	2014	Run	36
Miami-Dade	2014	Run	10
Miami-Dade	2014	Run	2
Miami-Dade	2014	Run	11
Miami-Dade	2014	Run	3
Miami-Dade	2014	Run	23
Miami-Dade	2014	Run	2
Miami-Dade	2014	Run	21
Miami-Dade	2014	Run	20

CNTYNM	YEAR	MODE	TACTCNT
Miami-Dade	2014	Run	18
Miami-Dade	2014	Run	8
Miami-Dade	2014	Run	9
Miami-Dade	2014	Run	1
Miami-Dade	2014	Run	30
Miami-Dade	2014	Run	5
Miami-Dade	2014	Run	12
Miami-Dade	2014	Run	22
Miami-Dade	2014	Run	22
Miami-Dade	2014	Run	12
Miami-Dade	2014	Run	20
Miami-Dade	2014	Run	19
Miami-Dade	2014	Run	9
Miami-Dade	2014	Run	1
Miami-Dade	2014	Run	25
Miami-Dade	2014	Run	2
Miami-Dade	2014	Run	1
Miami-Dade	2014	Run	5
Miami-Dade	2014	Run	2
Miami-Dade	2014	Run	2
Miami-Dade	2014	Run	2
Miami-Dade	2014	Run	26
Miami-Dade	2014	Run	9
Miami-Dade	2014	Run	9
Miami-Dade	2014	Run	12
Miami-Dade	2014	Run	1
Miami-Dade	2014	Run	2
Miami-Dade	2014	Run	5
Miami-Dade	2014	Run	20
Miami-Dade	2014	Run	2
Miami-Dade	2014	Run	8
Miami-Dade	2014	Run	1
Miami-Dade	2014	Run	30
Miami-Dade	2014	Run	6
Miami-Dade	2014	Run	20
Miami-Dade	2014	Run	31
Miami-Dade	2014	Run	9
Miami-Dade	2014	Run	7
Miami-Dade	2014	Run	27
Miami-Dade	2014	Run	16
Miami-Dade	2014	Run	2
Miami-Dade	2014	Run	40
Miami-Dade	2014	Run	2
Miami-Dade	2014	Run	22
Miami-Dade	2014	Run	27
Miami-Dade	2014	Run	58
Miami-Dade	2014	Run	77
Miami-Dade	2014	Run	13
Miami-Dade	2014	Run	1
Miami-Dade	2014	Run	19
Miami-Dade	2014	Run	19

CNTYNM	YEAR	MODE	TACTCNT
Miami-Dade	2014	Run	59
Miami-Dade	2014	Run	3
Miami-Dade	2014	Run	58
Miami-Dade	2014	Run	21
Miami-Dade	2014	Run	67
Miami-Dade	2014	Run	68
Miami-Dade	2014	Run	54
Miami-Dade	2014	Run	41
Miami-Dade	2014	Run	32
Miami-Dade	2014	Run	32
Miami-Dade	2014	Run	32
Miami-Dade	2014	Run	32
Miami-Dade	2014	Run	33
Miami-Dade	2014	Run	1
Miami-Dade	2014	Run	30
Miami-Dade	2014	Run	31
Miami-Dade	2014	Run	32
Miami-Dade	2014	Run	1
Miami-Dade	2014	Run	20
Miami-Dade	2014	Run	32
Miami-Dade	2014	Run	31
Miami-Dade	2014	Run	2
Miami-Dade	2014	Run	1
Miami-Dade	2014	Run	1
Miami-Dade	2014	Run	9
Miami-Dade	2014	Run	31
Miami-Dade	2014	Run	30
Miami-Dade	2014	Run	5
Miami-Dade	2014	Run	14
Miami-Dade	2014	Run	6
Miami-Dade	2014	Run	1
Miami-Dade	2014	Run	71
Miami-Dade	2014	Run	3
Miami-Dade	2014	Run	8
Miami-Dade	2014	Run	10
Miami-Dade	2014	Run	22
Miami-Dade	2014	Run	35
Miami-Dade	2014	Run	10
Miami-Dade	2014	Run	8
Miami-Dade	2014	Run	39
Miami-Dade	2014	Run	7
Miami-Dade	2014	Run	66
Miami-Dade	2014	Run	30
Miami-Dade	2014	Run	30
Miami-Dade	2014	Run	5
Miami-Dade	2014	Run	1
Miami-Dade	2014	Run	19
Miami-Dade	2014	Run	19
Miami-Dade	2014	Run	1
Miami-Dade	2014	Run	19
Miami-Dade	2014	Run	17

CNTYNM	YEAR	MODE	TACTCNT
Miami-Dade	2014	Run	4
Miami-Dade	2014	Run	1
Miami-Dade	2014	Run	1
Miami-Dade	2014	Run	1
Miami-Dade	2014	Run	1
Miami-Dade	2014	Run	1
Miami-Dade	2014	Run	2
Miami-Dade	2014	Run	2
Miami-Dade	2014	Run	1
Miami-Dade	2014	Run	2
Miami-Dade	2014	Run	8
Miami-Dade	2014	Run	8
Miami-Dade	2014	Run	3
Miami-Dade	2014	Run	1
Miami-Dade	2014	Run	1
Miami-Dade	2014	Run	1
Miami-Dade	2014	Run	1
Miami-Dade	2014	Run	23
Miami-Dade	2014	Run	1
Miami-Dade	2014	Run	1
Miami-Dade	2014	Run	1
Miami-Dade	2014	Run	8
Miami-Dade	2014	Run	8
Miami-Dade	2014	Run	53
Miami-Dade	2014	Run	1
Miami-Dade	2014	Run	6
Miami-Dade	2014	Run	10
Miami-Dade	2014	Run	7
Miami-Dade	2014	Run	7
Miami-Dade	2014	Run	7
Miami-Dade	2014	Run	5
Miami-Dade	2014	Run	5
Miami-Dade	2014	Run	5
Miami-Dade	2014	Run	5
Miami-Dade	2014	Run	5
Miami-Dade	2014	Run	5
Miami-Dade	2014	Run	3
Miami-Dade	2014	Run	5
Miami-Dade	2014	Run	5
Miami-Dade	2014	Run	5
Miami-Dade	2014	Run	5
Miami-Dade	2014	Run	5
Miami-Dade	2014	Run	5
Miami-Dade	2014	Run	5
Miami-Dade	2014	Run	5
Miami-Dade	2014	Run	11
Miami-Dade	2014	Run	4
Miami-Dade	2014	Run	1
Miami-Dade	2014	Run	50
Miami-Dade	2014	Run	13
Miami-Dade	2014	Run	13
Miami-Dade	2014	Run	49

CNTYNM	YEAR	MODE	TACTCNT
Miami-Dade	2014	Run	1
Miami-Dade	2014	Run	1
Miami-Dade	2014	Run	15
Miami-Dade	2014	Run	12
Miami-Dade	2014	Run	16
Miami-Dade	2014	Run	16
Miami-Dade	2014	Run	14
Miami-Dade	2014	Run	20
Miami-Dade	2014	Run	14
Miami-Dade	2014	Run	21
Miami-Dade	2014	Run	12
Miami-Dade	2014	Run	10
Miami-Dade	2014	Run	19
Miami-Dade	2014	Run	8
Miami-Dade	2014	Run	12
Miami-Dade	2014	Run	12
Miami-Dade	2014	Run	24
Miami-Dade	2014	Run	22
Miami-Dade	2014	Run	17
Miami-Dade	2014	Run	23
Miami-Dade	2014	Run	23
Miami-Dade	2014	Run	26
Miami-Dade	2014	Run	10
Miami-Dade	2014	Run	12
Miami-Dade	2014	Run	20
Miami-Dade	2014	Run	23
Miami-Dade	2014	Run	18
Miami-Dade	2014	Run	15
Miami-Dade	2014	Run	16
Miami-Dade	2014	Run	10
Miami-Dade	2014	Run	57
Miami-Dade	2014	Run	40
Miami-Dade	2014	Run	40
Miami-Dade	2014	Run	28
Miami-Dade	2014	Run	52
Miami-Dade	2014	Run	56
Miami-Dade	2014	Run	57
Miami-Dade	2014	Run	49
Miami-Dade	2014	Run	42
Miami-Dade	2014	Run	78
Miami-Dade	2014	Run	69
Miami-Dade	2014	Run	74
Miami-Dade	2014	Run	76
Miami-Dade	2014	Run	48
Miami-Dade	2014	Run	49
Miami-Dade	2014	Run	45
Miami-Dade	2014	Run	49
Miami-Dade	2014	Run	54
Miami-Dade	2014	Run	63
Miami-Dade	2014	Run	58
Miami-Dade	2014	Run	56

CNTYNM	YEAR	MODE	TACTCNT
Miami-Dade	2014	Run	33
Miami-Dade	2014	Run	34
Miami-Dade	2014	Run	47
Miami-Dade	2014	Run	40
Miami-Dade	2014	Run	35
Miami-Dade	2014	Run	31
Miami-Dade	2014	Run	36
Miami-Dade	2014	Run	46
Miami-Dade	2014	Run	49
Miami-Dade	2014	Run	40
Miami-Dade	2014	Run	42
Miami-Dade	2014	Run	24
Miami-Dade	2014	Run	2
Miami-Dade	2014	Run	22
Miami-Dade	2014	Run	2
Miami-Dade	2014	Run	16
Miami-Dade	2014	Run	17
Miami-Dade	2014	Run	1
Miami-Dade	2014	Run	2
Miami-Dade	2014	Run	1
Miami-Dade	2014	Run	2
Miami-Dade	2014	Run	4
Miami-Dade	2014	Run	2
Miami-Dade	2014	Run	4
Miami-Dade	2014	Run	3
Miami-Dade	2014	Run	1
Miami-Dade	2014	Run	2
Miami-Dade	2014	Run	2
Miami-Dade	2014	Run	1
Miami-Dade	2014	Run	1
Miami-Dade	2014	Run	2
Miami-Dade	2014	Run	2
Miami-Dade	2014	Run	2
Miami-Dade	2014	Run	2
Miami-Dade	2014	Run	10
Miami-Dade	2014	Run	19
Miami-Dade	2014	Run	19
Miami-Dade	2014	Run	37
Miami-Dade	2014	Run	30
Miami-Dade	2014	Run	54
Miami-Dade	2014	Run	2
Miami-Dade	2014	Run	1
Miami-Dade	2014	Run	1
Miami-Dade	2014	Run	1
Miami-Dade	2014	Run	1
Miami-Dade	2014	Run	1
Miami-Dade	2014	Run	9
Miami-Dade	2014	Run	9
Miami-Dade	2014	Run	30
Miami-Dade	2014	Run	1
Miami-Dade	2014	Run	25

CNTYNM	YEAR	MODE	TACTCNT
Miami-Dade	2014	Run	1
Miami-Dade	2014	Run	22
Miami-Dade	2014	Run	16
Miami-Dade	2014	Run	12
Miami-Dade	2014	Run	15
Miami-Dade	2014	Run	12
Miami-Dade	2014	Run	11
Miami-Dade	2014	Run	12
Miami-Dade	2014	Run	34
Miami-Dade	2014	Run	1
Miami-Dade	2014	Run	33
Miami-Dade	2014	Run	9
Miami-Dade	2014	Run	19
Miami-Dade	2014	Run	31
Miami-Dade	2014	Run	25
Miami-Dade	2014	Run	2
Miami-Dade	2014	Run	2
Miami-Dade	2014	Run	2
Miami-Dade	2014	Run	3
Miami-Dade	2014	Run	3
Miami-Dade	2014	Run	2
Miami-Dade	2014	Run	4
Miami-Dade	2014	Run	4
Miami-Dade	2014	Run	3
Miami-Dade	2014	Run	3
Miami-Dade	2014	Run	3
Miami-Dade	2014	Run	2
Miami-Dade	2014	Run	1
Miami-Dade	2014	Run	3
Miami-Dade	2014	Run	3
Miami-Dade	2014	Run	2
Miami-Dade	2014	Run	3
Miami-Dade	2014	Run	1
Miami-Dade	2014	Run	1
Miami-Dade	2014	Run	3
Miami-Dade	2014	Run	2
Miami-Dade	2014	Run	3
Miami-Dade	2014	Run	5
Miami-Dade	2014	Run	3
Miami-Dade	2014	Run	3
Miami-Dade	2014	Run	3
Miami-Dade	2014	Run	3
Miami-Dade	2014	Run	3
Miami-Dade	2014	Run	4
Miami-Dade	2014	Run	2
Miami-Dade	2014	Run	2
Miami-Dade	2014	Run	1
Miami-Dade	2014	Run	58
Miami-Dade	2014	Run	3
Miami-Dade	2014	Run	15
Miami-Dade	2014	Run	58

CNTYNM	YEAR	MODE	TACTCNT
Miami-Dade	2014	Run	37
Miami-Dade	2014	Run	37
Miami-Dade	2014	Run	9
Miami-Dade	2014	Run	9
Miami-Dade	2014	Run	9
Miami-Dade	2014	Run	29
Miami-Dade	2014	Run	29
Miami-Dade	2014	Run	1
Miami-Dade	2014	Run	2
Miami-Dade	2014	Run	6
Miami-Dade	2014	Run	5
Miami-Dade	2014	Run	5
Miami-Dade	2014	Run	55
Miami-Dade	2014	Run	64
Miami-Dade	2014	Run	64
Miami-Dade	2014	Run	71
Miami-Dade	2014	Run	4
Miami-Dade	2014	Run	3
Miami-Dade	2014	Run	32
Miami-Dade	2014	Run	31
Miami-Dade	2014	Run	1
Miami-Dade	2014	Run	1
Miami-Dade	2014	Run	8
Miami-Dade	2014	Run	5
Miami-Dade	2014	Run	25
Miami-Dade	2014	Run	34
Miami-Dade	2014	Run	35
Miami-Dade	2014	Run	32
Miami-Dade	2014	Run	47
Miami-Dade	2014	Run	21
Miami-Dade	2014	Run	27
Miami-Dade	2014	Run	1
Miami-Dade	2014	Run	11
Miami-Dade	2014	Run	7
Miami-Dade	2014	Run	35
Miami-Dade	2014	Run	38
Miami-Dade	2014	Run	29
Miami-Dade	2014	Run	8
Miami-Dade	2014	Run	8
Miami-Dade	2014	Run	9
Miami-Dade	2014	Run	6
Miami-Dade	2014	Run	6
Miami-Dade	2014	Run	6
Miami-Dade	2014	Run	5
Miami-Dade	2014	Run	5
Miami-Dade	2014	Run	8
Miami-Dade	2014	Run	17
Miami-Dade	2014	Run	23
Miami-Dade	2014	Run	47
Miami-Dade	2014	Run	42
Miami-Dade	2014	Run	30

CNTYNM	YEAR	MODE	TACTCNT
Miami-Dade	2014	Run	31
Miami-Dade	2014	Run	4
Miami-Dade	2014	Run	4
Miami-Dade	2014	Run	29
Miami-Dade	2014	Run	30
Miami-Dade	2014	Run	28
Miami-Dade	2014	Run	35
Miami-Dade	2014	Run	36
Miami-Dade	2014	Run	38
Miami-Dade	2014	Run	38
Miami-Dade	2014	Run	31
Miami-Dade	2014	Run	31
Miami-Dade	2014	Run	29
Miami-Dade	2014	Run	47
Miami-Dade	2014	Run	47
Miami-Dade	2014	Run	91
Miami-Dade	2014	Run	68
Miami-Dade	2014	Run	44
Miami-Dade	2014	Run	43
Miami-Dade	2014	Run	70
Miami-Dade	2014	Run	84
Miami-Dade	2014	Run	27
Miami-Dade	2014	Run	26
Miami-Dade	2014	Run	58
Miami-Dade	2014	Run	56
Miami-Dade	2014	Run	76
Miami-Dade	2014	Run	86
Miami-Dade	2014	Run	3
Miami-Dade	2014	Run	3
Miami-Dade	2014	Run	57
Miami-Dade	2014	Run	71
Miami-Dade	2014	Run	16
Miami-Dade	2014	Run	10
Miami-Dade	2014	Run	11
Miami-Dade	2014	Run	38
Miami-Dade	2014	Run	59
Miami-Dade	2014	Run	58
Miami-Dade	2014	Run	11
Miami-Dade	2014	Run	11
Miami-Dade	2014	Run	59
Miami-Dade	2014	Run	39
Miami-Dade	2014	Run	59
Miami-Dade	2014	Run	3
Miami-Dade	2014	Run	3
Miami-Dade	2014	Run	3
Miami-Dade	2014	Run	3
Miami-Dade	2014	Run	3
Miami-Dade	2014	Run	8
Miami-Dade	2014	Run	8
Miami-Dade	2014	Run	11
Miami-Dade	2014	Run	11

CNTYNM	YEAR	MODE	TACTCNT
Miami-Dade	2014	Run	1
Miami-Dade	2014	Run	5
Miami-Dade	2014	Run	14
Miami-Dade	2014	Run	24
Miami-Dade	2014	Run	13
Miami-Dade	2014	Run	14
Miami-Dade	2014	Run	12
Miami-Dade	2014	Run	13
Miami-Dade	2014	Run	2
Miami-Dade	2014	Run	1
Miami-Dade	2014	Run	1
Miami-Dade	2014	Run	1
Miami-Dade	2014	Run	1
Miami-Dade	2014	Run	2
Miami-Dade	2014	Run	2
Miami-Dade	2014	Run	3
Miami-Dade	2014	Run	3
Miami-Dade	2014	Run	3
Miami-Dade	2014	Run	1
Miami-Dade	2014	Run	1
Miami-Dade	2014	Run	3
Miami-Dade	2014	Run	3
Miami-Dade	2014	Run	3
Miami-Dade	2014	Run	2
Miami-Dade	2014	Run	2
Miami-Dade	2014	Run	2
Miami-Dade	2014	Run	2
Miami-Dade	2014	Run	3
Miami-Dade	2014	Run	3
Miami-Dade	2014	Run	4
Miami-Dade	2014	Run	3
Miami-Dade	2014	Run	7
Miami-Dade	2014	Run	3
Miami-Dade	2014	Run	7
Miami-Dade	2014	Run	32
Miami-Dade	2014	Run	39
Miami-Dade	2014	Run	32
Miami-Dade	2014	Run	30
Miami-Dade	2014	Run	2
Miami-Dade	2014	Run	2
Miami-Dade	2014	Run	3
Miami-Dade	2014	Run	5
Miami-Dade	2014	Run	8
Miami-Dade	2014	Run	7
Miami-Dade	2014	Run	1
Miami-Dade	2014	Run	14
Miami-Dade	2014	Run	14
Miami-Dade	2014	Run	15
Miami-Dade	2014	Run	14
Miami-Dade	2014	Run	8
Miami-Dade	2014	Run	8

CNTYNM	YEAR	MODE	TACTCNT
Miami-Dade	2014	Run	11
Miami-Dade	2014	Run	27
Miami-Dade	2014	Run	19
Miami-Dade	2014	Run	20
Miami-Dade	2014	Run	8
Miami-Dade	2014	Run	25
Miami-Dade	2014	Run	20
Miami-Dade	2014	Run	25
Miami-Dade	2014	Run	30
Miami-Dade	2014	Run	21
Miami-Dade	2014	Run	16
Miami-Dade	2014	Run	10
Miami-Dade	2014	Run	14
Miami-Dade	2014	Run	10
Miami-Dade	2014	Run	18
Miami-Dade	2014	Run	9
Miami-Dade	2014	Run	14
Miami-Dade	2014	Run	14
Miami-Dade	2014	Run	17
Miami-Dade	2014	Run	3
Miami-Dade	2014	Run	18
Miami-Dade	2014	Run	26
Miami-Dade	2014	Run	21
Miami-Dade	2014	Run	4
Miami-Dade	2014	Run	2
Miami-Dade	2014	Run	13
Miami-Dade	2014	Run	24
Miami-Dade	2014	Run	17
Miami-Dade	2014	Run	2
Miami-Dade	2014	Run	2
Miami-Dade	2014	Run	21
Miami-Dade	2014	Run	1
Miami-Dade	2014	Run	1
Miami-Dade	2014	Run	1
Miami-Dade	2014	Run	21
Miami-Dade	2014	Run	20
Miami-Dade	2014	Run	8
Miami-Dade	2014	Run	7
Miami-Dade	2014	Run	10
Miami-Dade	2014	Run	10
Miami-Dade	2014	Run	13
Miami-Dade	2014	Run	13
Miami-Dade	2014	Run	13
Miami-Dade	2014	Run	14
Miami-Dade	2014	Run	12
Miami-Dade	2014	Run	12
Miami-Dade	2014	Run	14
Miami-Dade	2014	Run	13
Miami-Dade	2014	Run	10
Miami-Dade	2014	Run	10
Miami-Dade	2014	Run	14

CNTYNM	YEAR	MODE	TACTCNT
Miami-Dade	2014	Run	12
Miami-Dade	2014	Run	10
Miami-Dade	2014	Run	10
Miami-Dade	2014	Run	20
Miami-Dade	2014	Run	18
Miami-Dade	2014	Run	10
Miami-Dade	2014	Run	5
Miami-Dade	2014	Run	12
Miami-Dade	2014	Run	10
Miami-Dade	2014	Run	1
Miami-Dade	2014	Run	1
Miami-Dade	2014	Run	1
Miami-Dade	2014	Run	1
Miami-Dade	2014	Run	1
Miami-Dade	2014	Run	1
Miami-Dade	2014	Run	1
Miami-Dade	2014	Run	1
Miami-Dade	2014	Run	1
Miami-Dade	2014	Run	1
Miami-Dade	2014	Run	1
Miami-Dade	2014	Run	1
Miami-Dade	2014	Run	1
Miami-Dade	2014	Run	1
Miami-Dade	2014	Run	1
Miami-Dade	2014	Run	1
Miami-Dade	2014	Run	1
Miami-Dade	2014	Run	26
Miami-Dade	2014	Run	27
Miami-Dade	2014	Run	2
Miami-Dade	2014	Run	2
Miami-Dade	2014	Run	2
Miami-Dade	2014	Run	2
Miami-Dade	2014	Run	2
Miami-Dade	2014	Run	2
Miami-Dade	2014	Run	2
Miami-Dade	2014	Run	2
Miami-Dade	2014	Run	2
Miami-Dade	2014	Run	2
Miami-Dade	2014	Run	1
Miami-Dade	2014	Run	1
Miami-Dade	2014	Run	1
Miami-Dade	2014	Run	3
Miami-Dade	2014	Run	7
Miami-Dade	2014	Run	6
Miami-Dade	2014	Run	7
Miami-Dade	2014	Run	5
Miami-Dade	2014	Run	10
Miami-Dade	2014	Run	26
Miami-Dade	2014	Run	20
Miami-Dade	2014	Run	16
Miami-Dade	2014	Run	19
Miami-Dade	2014	Run	18

CNTYNM	YEAR	MODE	TACTCNT
Miami-Dade	2014	Run	16
Miami-Dade	2014	Run	18
Miami-Dade	2014	Run	3
Miami-Dade	2014	Run	4
Miami-Dade	2014	Run	26
Miami-Dade	2014	Run	20
Miami-Dade	2014	Run	8
Miami-Dade	2014	Run	7
Miami-Dade	2014	Run	7
Miami-Dade	2014	Run	6
Miami-Dade	2014	Run	6
Miami-Dade	2014	Run	7
Miami-Dade	2014	Run	7
Miami-Dade	2014	Run	6
Miami-Dade	2014	Run	6
Miami-Dade	2014	Run	5
Miami-Dade	2014	Run	6
Miami-Dade	2014	Run	40
Miami-Dade	2014	Run	43
Miami-Dade	2014	Run	49
Miami-Dade	2014	Run	50
Miami-Dade	2014	Run	47
Miami-Dade	2014	Run	47
Miami-Dade	2014	Run	48
Miami-Dade	2014	Run	60
Miami-Dade	2014	Run	60
Miami-Dade	2014	Run	49
Miami-Dade	2014	Run	39
Miami-Dade	2014	Run	12
Miami-Dade	2014	Run	7
Miami-Dade	2014	Run	4
Miami-Dade	2014	Run	6
Miami-Dade	2014	Run	7
Miami-Dade	2014	Run	17
Miami-Dade	2014	Run	23
Miami-Dade	2014	Run	22
Miami-Dade	2014	Run	35
Miami-Dade	2014	Run	2
Miami-Dade	2014	Run	12
Miami-Dade	2014	Run	6
Miami-Dade	2014	Run	4
Miami-Dade	2014	Run	30
Miami-Dade	2014	Run	31
Miami-Dade	2014	Run	8
Miami-Dade	2014	Run	12
Miami-Dade	2014	Run	1
Miami-Dade	2014	Run	8
Miami-Dade	2014	Run	16
Miami-Dade	2014	Run	7
Miami-Dade	2014	Run	18
Miami-Dade	2014	Run	7

CNTYNM	YEAR	MODE	TACTCNT
Miami-Dade	2014	Run	7
Miami-Dade	2014	Run	9
Miami-Dade	2014	Run	9
Miami-Dade	2014	Run	3
Miami-Dade	2014	Run	4
Miami-Dade	2014	Run	6
Miami-Dade	2014	Run	2
Miami-Dade	2014	Run	2
Miami-Dade	2014	Run	6
Miami-Dade	2014	Run	15
Miami-Dade	2014	Run	2
Miami-Dade	2014	Run	14
Miami-Dade	2014	Run	3
Miami-Dade	2014	Run	4
Miami-Dade	2014	Run	3
Miami-Dade	2014	Run	1
Miami-Dade	2014	Run	13
Miami-Dade	2014	Run	1
Miami-Dade	2014	Run	1
Miami-Dade	2014	Run	1
Miami-Dade	2014	Run	1
Miami-Dade	2014	Run	1
Miami-Dade	2014	Run	2
Miami-Dade	2014	Run	1
Miami-Dade	2014	Run	1
Miami-Dade	2014	Run	1
Miami-Dade	2014	Run	2
Miami-Dade	2014	Run	14
Miami-Dade	2014	Run	2
Miami-Dade	2014	Run	2
Miami-Dade	2014	Run	1
Miami-Dade	2014	Run	1
Miami-Dade	2014	Run	1
Miami-Dade	2014	Run	1
Miami-Dade	2014	Run	1
Miami-Dade	2014	Run	1
Miami-Dade	2014	Run	3
Miami-Dade	2014	Run	3
Miami-Dade	2014	Run	1
Miami-Dade	2014	Run	5
Miami-Dade	2014	Run	8
Miami-Dade	2014	Run	2
Miami-Dade	2014	Run	14
Miami-Dade	2014	Run	12
Miami-Dade	2014	Run	48
Miami-Dade	2014	Run	21
Miami-Dade	2014	Run	90
Miami-Dade	2014	Run	61
Miami-Dade	2014	Run	24
Miami-Dade	2014	Run	58
Miami-Dade	2014	Run	68

CNTYNM	YEAR	MODE	TACTCNT
Miami-Dade	2014	Run	39
Miami-Dade	2014	Run	39
Miami-Dade	2014	Run	77
Miami-Dade	2014	Run	74
Miami-Dade	2014	Run	50
Miami-Dade	2014	Run	52
Miami-Dade	2014	Run	56
Miami-Dade	2014	Run	55
Miami-Dade	2014	Run	13
Miami-Dade	2014	Run	2
Miami-Dade	2014	Run	49
Miami-Dade	2014	Run	49
Miami-Dade	2014	Run	1
Miami-Dade	2014	Run	2
Miami-Dade	2014	Run	18
Miami-Dade	2014	Run	15
Miami-Dade	2014	Run	8
Miami-Dade	2014	Run	1
Miami-Dade	2014	Run	2
Miami-Dade	2014	Run	6
Miami-Dade	2014	Run	6
Miami-Dade	2014	Run	1
Miami-Dade	2014	Run	1
Miami-Dade	2014	Run	30
Miami-Dade	2014	Run	30
Miami-Dade	2014	Run	37
Miami-Dade	2014	Run	37
Miami-Dade	2014	Run	10
Miami-Dade	2014	Run	10
Miami-Dade	2014	Run	35
Miami-Dade	2014	Run	35
Miami-Dade	2014	Run	30
Miami-Dade	2014	Run	30
Miami-Dade	2014	Run	4
Miami-Dade	2014	Run	9
Miami-Dade	2014	Run	1
Miami-Dade	2014	Run	7
Miami-Dade	2014	Run	7
Miami-Dade	2014	Run	9
Miami-Dade	2014	Run	2
Miami-Dade	2014	Run	12
Miami-Dade	2014	Run	14
Miami-Dade	2014	Run	14
Miami-Dade	2014	Run	14
Miami-Dade	2014	Run	27
Miami-Dade	2014	Run	27
Miami-Dade	2014	Run	63
Miami-Dade	2014	Run	19
Miami-Dade	2014	Run	19
Miami-Dade	2014	Run	29
Miami-Dade	2014	Run	32

CNTYNM	YEAR	MODE	TACTCNT
Miami-Dade	2014	Run	10
Miami-Dade	2014	Run	17
Miami-Dade	2014	Run	5
Miami-Dade	2014	Run	5
Miami-Dade	2014	Run	3
Miami-Dade	2014	Run	2
Miami-Dade	2014	Run	1
Miami-Dade	2014	Run	13
Miami-Dade	2014	Run	16
Miami-Dade	2014	Run	14
Miami-Dade	2014	Run	6
Miami-Dade	2014	Run	7
Miami-Dade	2014	Run	12
Miami-Dade	2014	Run	12
Miami-Dade	2014	Run	20
Miami-Dade	2014	Run	14
Miami-Dade	2014	Run	14
Miami-Dade	2014	Run	23
Miami-Dade	2014	Run	1
Miami-Dade	2014	Run	1
Miami-Dade	2014	Run	29
Miami-Dade	2014	Run	33
Miami-Dade	2014	Run	4
Miami-Dade	2014	Run	4
Miami-Dade	2014	Run	29
Miami-Dade	2014	Run	29
Miami-Dade	2014	Run	3
Miami-Dade	2014	Run	33
Miami-Dade	2014	Run	32
Miami-Dade	2014	Run	5
Miami-Dade	2014	Run	1
Miami-Dade	2014	Run	1
Miami-Dade	2014	Run	1
Miami-Dade	2014	Run	1
Miami-Dade	2014	Run	1
Miami-Dade	2014	Run	1
Miami-Dade	2014	Run	1
Miami-Dade	2014	Run	2
Miami-Dade	2014	Run	1
Miami-Dade	2014	Run	1
Miami-Dade	2014	Run	1
Miami-Dade	2014	Run	1
Miami-Dade	2014	Run	4
Miami-Dade	2014	Run	36
Miami-Dade	2014	Run	37
Miami-Dade	2014	Run	37
Miami-Dade	2014	Run	37
Miami-Dade	2014	Run	3
Miami-Dade	2014	Run	4
Miami-Dade	2014	Run	1
Miami-Dade	2014	Run	2

CNTYNM	YEAR	MODE	TACTCNT
Miami-Dade	2014	Run	4
Miami-Dade	2014	Run	4
Miami-Dade	2014	Run	2
Miami-Dade	2014	Run	2
Miami-Dade	2014	Run	1
Miami-Dade	2014	Run	1
Miami-Dade	2014	Run	37
Miami-Dade	2014	Run	5
Miami-Dade	2014	Run	43
Miami-Dade	2014	Run	43
Miami-Dade	2014	Run	34
Miami-Dade	2014	Run	6
Miami-Dade	2014	Run	17
Miami-Dade	2014	Run	1
Miami-Dade	2014	Run	1
Miami-Dade	2014	Run	13
Miami-Dade	2014	Run	12
Miami-Dade	2014	Run	9
Miami-Dade	2014	Run	10
Miami-Dade	2014	Run	11
Miami-Dade	2014	Run	13
Miami-Dade	2014	Run	13
Miami-Dade	2014	Run	8
Miami-Dade	2014	Run	12
Miami-Dade	2014	Run	12
Miami-Dade	2014	Run	11
Miami-Dade	2014	Run	7
Miami-Dade	2014	Run	11
Miami-Dade	2014	Run	9
Miami-Dade	2014	Run	53
Miami-Dade	2014	Run	52
Miami-Dade	2014	Run	43
Miami-Dade	2014	Run	18
Miami-Dade	2014	Run	3
Miami-Dade	2014	Run	13
Miami-Dade	2014	Run	13
Miami-Dade	2014	Run	9
Miami-Dade	2014	Run	10
Miami-Dade	2014	Run	3
Miami-Dade	2014	Run	8
Miami-Dade	2014	Run	6
Miami-Dade	2014	Run	42
Miami-Dade	2014	Run	42
Miami-Dade	2014	Run	16
Miami-Dade	2014	Run	38
Miami-Dade	2014	Run	2
Miami-Dade	2014	Run	17
Miami-Dade	2014	Run	9
Miami-Dade	2014	Run	4
Miami-Dade	2014	Run	4
Miami-Dade	2014	Run	1

CNTYNM	YEAR	MODE	TACTCNT
Miami-Dade	2014	Run	7
Miami-Dade	2014	Run	6
Miami-Dade	2014	Run	1
Miami-Dade	2014	Run	1
Miami-Dade	2014	Run	1
Miami-Dade	2014	Run	4
Miami-Dade	2014	Run	10
Miami-Dade	2014	Run	9
Miami-Dade	2014	Run	6
Miami-Dade	2014	Run	4
Miami-Dade	2014	Run	3
Miami-Dade	2014	Run	2
Miami-Dade	2014	Run	4
Miami-Dade	2014	Run	4
Miami-Dade	2014	Run	1
Miami-Dade	2014	Run	5
Miami-Dade	2014	Run	1
Miami-Dade	2014	Run	4
Miami-Dade	2014	Run	2
Miami-Dade	2014	Run	1
Miami-Dade	2014	Run	1
Miami-Dade	2014	Run	1
Miami-Dade	2014	Run	1
Miami-Dade	2014	Run	1
Miami-Dade	2014	Run	1
Miami-Dade	2014	Run	1
Miami-Dade	2014	Run	1
Miami-Dade	2014	Run	1
Miami-Dade	2014	Run	1
Miami-Dade	2014	Run	1
Miami-Dade	2014	Run	1
Miami-Dade	2014	Run	1
Miami-Dade	2014	Run	3
Miami-Dade	2014	Run	3
Miami-Dade	2014	Run	1
Miami-Dade	2014	Run	1
Miami-Dade	2014	Run	1
Miami-Dade	2014	Run	1
Miami-Dade	2014	Run	1
Miami-Dade	2014	Run	1
Miami-Dade	2014	Run	1
Miami-Dade	2014	Run	1
Miami-Dade	2014	Run	1
Miami-Dade	2014	Run	1
Miami-Dade	2014	Run	1
Miami-Dade	2014	Run	1
Miami-Dade	2014	Run	1

CNTYNM	YEAR	MODE	TACTCNT
Miami-Dade	2014	Run	11
Miami-Dade	2014	Run	11
Miami-Dade	2014	Run	18
Miami-Dade	2014	Run	13
Miami-Dade	2014	Run	9
Miami-Dade	2014	Run	30
Miami-Dade	2014	Run	30
Miami-Dade	2014	Run	17
Miami-Dade	2014	Run	1
Miami-Dade	2014	Run	3
Miami-Dade	2014	Run	2
Miami-Dade	2014	Run	9
Miami-Dade	2014	Run	8
Miami-Dade	2014	Run	27
Miami-Dade	2014	Run	29
Miami-Dade	2014	Run	7
Miami-Dade	2014	Run	6
Miami-Dade	2014	Run	2
Miami-Dade	2014	Run	2
Miami-Dade	2014	Run	2
Miami-Dade	2014	Run	1
Miami-Dade	2014	Run	57
Miami-Dade	2014	Run	57
Miami-Dade	2014	Run	2
Miami-Dade	2014	Run	18
Miami-Dade	2014	Run	18
Miami-Dade	2014	Run	6
Miami-Dade	2014	Run	5
Miami-Dade	2014	Run	56
Miami-Dade	2014	Run	57
Miami-Dade	2014	Run	1
Miami-Dade	2014	Run	1
Miami-Dade	2014	Run	1
Miami-Dade	2014	Run	4
Miami-Dade	2014	Run	2
Miami-Dade	2014	Run	3
Miami-Dade	2014	Run	11
Miami-Dade	2014	Run	47
Miami-Dade	2014	Run	47
Miami-Dade	2014	Run	47
Miami-Dade	2014	Run	1
Miami-Dade	2014	Run	63
Miami-Dade	2014	Run	63
Miami-Dade	2014	Run	25
Miami-Dade	2014	Run	47
Miami-Dade	2014	Run	46
Miami-Dade	2014	Run	39
Miami-Dade	2014	Run	52
Miami-Dade	2014	Run	4
Miami-Dade	2014	Run	52
Miami-Dade	2014	Run	52

CNTYNM	YEAR	MODE	TACTCNT
Miami-Dade	2014	Run	3
Miami-Dade	2014	Run	46
Miami-Dade	2014	Run	46
Miami-Dade	2014	Run	45
Miami-Dade	2014	Run	44
Miami-Dade	2014	Run	1
Miami-Dade	2014	Run	33
Miami-Dade	2014	Run	42
Miami-Dade	2014	Run	47
Miami-Dade	2014	Run	47
Miami-Dade	2014	Run	47
Miami-Dade	2014	Run	49
Miami-Dade	2014	Run	41
Miami-Dade	2015	RUN	3
Miami-Dade	2015	RUN	44
Miami-Dade	2015	RUN	43
Miami-Dade	2015	RUN	10
Miami-Dade	2015	RUN	76
Miami-Dade	2015	RUN	77
Miami-Dade	2015	RUN	4
Miami-Dade	2015	RUN	4
Miami-Dade	2015	RUN	1
Miami-Dade	2015	RUN	6
Miami-Dade	2015	RUN	35
Miami-Dade	2015	RUN	13
Miami-Dade	2015	RUN	9
Miami-Dade	2015	RUN	34
Miami-Dade	2015	RUN	47
Miami-Dade	2015	RUN	45
Miami-Dade	2015	RUN	46
Miami-Dade	2015	RUN	28
Miami-Dade	2015	RUN	3
Miami-Dade	2015	RUN	2
Miami-Dade	2015	RUN	25
Miami-Dade	2015	RUN	31
Miami-Dade	2015	RUN	33
Miami-Dade	2015	RUN	30
Miami-Dade	2015	RUN	2
Miami-Dade	2015	RUN	31
Miami-Dade	2015	RUN	1
Miami-Dade	2015	RUN	1
Miami-Dade	2015	RUN	34
Miami-Dade	2015	RUN	3
Miami-Dade	2015	RUN	1
Miami-Dade	2015	RUN	3
Miami-Dade	2015	RUN	3
Miami-Dade	2015	RUN	3
Miami-Dade	2015	RUN	37
Miami-Dade	2015	RUN	1
Miami-Dade	2015	RUN	1

CNTYNM	YEAR	MODE	TACTCNT
Miami-Dade	2015	RUN	1
Miami-Dade	2015	RUN	1
Miami-Dade	2015	RUN	45
Miami-Dade	2015	RUN	1
Miami-Dade	2015	RUN	19
Miami-Dade	2015	RUN	1
Miami-Dade	2015	RUN	6
Miami-Dade	2015	RUN	45
Miami-Dade	2015	RUN	5
Miami-Dade	2015	RUN	5
Miami-Dade	2015	RUN	6
Miami-Dade	2015	RUN	6
Miami-Dade	2015	RUN	7
Miami-Dade	2015	RUN	6
Miami-Dade	2015	RUN	22
Miami-Dade	2015	RUN	25
Miami-Dade	2015	RUN	34
Miami-Dade	2015	RUN	35
Miami-Dade	2015	RUN	34
Miami-Dade	2015	RUN	31
Miami-Dade	2015	RUN	12
Miami-Dade	2015	RUN	1
Miami-Dade	2015	RUN	3
Miami-Dade	2015	RUN	2
Miami-Dade	2015	RUN	1
Miami-Dade	2015	RUN	3
Miami-Dade	2015	RUN	3
Miami-Dade	2015	RUN	2
Miami-Dade	2015	RUN	3
Miami-Dade	2015	RUN	1
Miami-Dade	2015	RUN	1
Miami-Dade	2015	RUN	1
Miami-Dade	2015	RUN	6
Miami-Dade	2015	RUN	2
Miami-Dade	2015	RUN	2
Miami-Dade	2015	RUN	1
Miami-Dade	2015	RUN	2
Miami-Dade	2015	RUN	2
Miami-Dade	2015	RUN	2
Miami-Dade	2015	RUN	3
Miami-Dade	2015	RUN	1
Miami-Dade	2015	RUN	6
Miami-Dade	2015	RUN	2
Miami-Dade	2015	RUN	5
Miami-Dade	2015	RUN	2
Miami-Dade	2015	RUN	2
Miami-Dade	2015	RUN	4
Miami-Dade	2015	RUN	4
Miami-Dade	2015	RUN	4
Miami-Dade	2015	RUN	4
Miami-Dade	2015	RUN	2

CNTYNM	YEAR	MODE	TACTCNT
Miami-Dade	2015	RUN	3
Miami-Dade	2015	RUN	1
Miami-Dade	2015	RUN	5
Miami-Dade	2015	RUN	1
Miami-Dade	2015	RUN	5
Miami-Dade	2015	RUN	4
Miami-Dade	2015	RUN	4
Miami-Dade	2015	RUN	4
Miami-Dade	2015	RUN	4
Miami-Dade	2015	RUN	3
Miami-Dade	2015	RUN	3
Miami-Dade	2015	RUN	2
Miami-Dade	2015	RUN	3
Miami-Dade	2015	RUN	1
Miami-Dade	2015	RUN	1
Miami-Dade	2015	RUN	1
Miami-Dade	2015	RUN	2
Miami-Dade	2015	RUN	2
Miami-Dade	2015	RUN	1
Miami-Dade	2015	RUN	5
Miami-Dade	2015	RUN	1
Miami-Dade	2015	RUN	2
Miami-Dade	2015	RUN	2
Miami-Dade	2015	RUN	1
Miami-Dade	2015	RUN	7
Miami-Dade	2015	RUN	1
Miami-Dade	2015	RUN	2
Miami-Dade	2015	RUN	7
Miami-Dade	2015	RUN	1
Miami-Dade	2015	RUN	2
Miami-Dade	2015	RUN	1
Miami-Dade	2015	RUN	2
Miami-Dade	2015	RUN	1
Miami-Dade	2015	RUN	4
Miami-Dade	2015	RUN	1
Miami-Dade	2015	RUN	2
Miami-Dade	2015	RUN	1
Miami-Dade	2015	RUN	5
Miami-Dade	2015	RUN	2
Miami-Dade	2015	RUN	31
Miami-Dade	2015	RUN	30
Miami-Dade	2015	RUN	35
Miami-Dade	2015	RUN	5
Miami-Dade	2015	RUN	8
Miami-Dade	2015	RUN	1
Miami-Dade	2015	RUN	3
Miami-Dade	2015	RUN	11
Miami-Dade	2015	RUN	8
Miami-Dade	2015	RUN	4
Miami-Dade	2015	RUN	5

CNTYNM	YEAR	MODE	TACTCNT
Miami-Dade	2015	RUN	4
Miami-Dade	2015	RUN	3
Miami-Dade	2015	RUN	1
Miami-Dade	2015	RUN	2
Miami-Dade	2015	RUN	3
Miami-Dade	2015	RUN	3
Miami-Dade	2015	RUN	3
Miami-Dade	2015	RUN	3
Miami-Dade	2015	RUN	4
Miami-Dade	2015	RUN	2
Miami-Dade	2015	RUN	2
Miami-Dade	2015	RUN	2
Miami-Dade	2015	RUN	3
Miami-Dade	2015	RUN	2
Miami-Dade	2015	RUN	3
Miami-Dade	2015	RUN	1
Miami-Dade	2015	RUN	4
Miami-Dade	2015	RUN	4
Miami-Dade	2015	RUN	1
Miami-Dade	2015	RUN	4
Miami-Dade	2015	RUN	7
Miami-Dade	2015	RUN	4
Miami-Dade	2015	RUN	2
Miami-Dade	2015	RUN	3
Miami-Dade	2015	RUN	3
Miami-Dade	2015	RUN	5
Miami-Dade	2015	RUN	6
Miami-Dade	2015	RUN	3
Miami-Dade	2015	RUN	5
Miami-Dade	2015	RUN	5
Miami-Dade	2015	RUN	1
Miami-Dade	2015	RUN	1
Miami-Dade	2015	RUN	3
Miami-Dade	2015	RUN	1
Miami-Dade	2015	RUN	1
Miami-Dade	2015	RUN	1
Miami-Dade	2015	RUN	1
Miami-Dade	2015	RUN	1
Miami-Dade	2015	RUN	2
Miami-Dade	2015	RUN	4
Miami-Dade	2015	RUN	2
Miami-Dade	2015	RUN	1
Miami-Dade	2015	RUN	4
Miami-Dade	2015	RUN	15
Miami-Dade	2015	RUN	8
Miami-Dade	2015	RUN	9
Miami-Dade	2015	RUN	3
Miami-Dade	2015	RUN	2
Miami-Dade	2015	RUN	4
Miami-Dade	2015	RUN	1
Miami-Dade	2015	RUN	4

CNTYNM	YEAR	MODE	TACTCNT
Miami-Dade	2015	RUN	1
Miami-Dade	2015	RUN	3
Miami-Dade	2015	RUN	1
Miami-Dade	2015	RUN	16
Miami-Dade	2015	RUN	3
Miami-Dade	2015	RUN	1
Miami-Dade	2015	RUN	3
Miami-Dade	2015	RUN	3
Miami-Dade	2015	RUN	3
Miami-Dade	2015	RUN	2
Miami-Dade	2015	RUN	2
Miami-Dade	2015	RUN	1
Miami-Dade	2015	RUN	3
Miami-Dade	2015	RUN	2
Miami-Dade	2015	RUN	3
Miami-Dade	2015	RUN	1
Miami-Dade	2015	RUN	1
Miami-Dade	2015	RUN	1
Miami-Dade	2015	RUN	1
Miami-Dade	2015	RUN	1
Miami-Dade	2015	RUN	23
Miami-Dade	2015	RUN	30
Miami-Dade	2015	RUN	7
Miami-Dade	2015	RUN	1
Miami-Dade	2015	RUN	4
Miami-Dade	2015	RUN	2
Miami-Dade	2015	RUN	28
Miami-Dade	2015	RUN	1
Miami-Dade	2015	RUN	4
Miami-Dade	2015	RUN	4
Miami-Dade	2015	RUN	36
Miami-Dade	2015	RUN	8
Miami-Dade	2015	RUN	27
Miami-Dade	2015	RUN	1
Miami-Dade	2015	RUN	1
Miami-Dade	2015	RUN	4
Miami-Dade	2015	RUN	2
Miami-Dade	2015	RUN	29
Miami-Dade	2015	RUN	4
Miami-Dade	2015	RUN	36
Miami-Dade	2015	RUN	39
Miami-Dade	2015	RUN	8
Miami-Dade	2015	RUN	1
Miami-Dade	2015	RUN	1
Miami-Dade	2015	RUN	4
Miami-Dade	2015	RUN	4
Miami-Dade	2015	RUN	7
Miami-Dade	2015	RUN	30
Miami-Dade	2015	RUN	1
Miami-Dade	2015	RUN	2
Miami-Dade	2015	RUN	36

CNTYNM	YEAR	MODE	TACTCNT
Miami-Dade	2015	RUN	25
Miami-Dade	2015	RUN	8
Miami-Dade	2015	RUN	1
Miami-Dade	2015	RUN	4
Miami-Dade	2015	RUN	4
Miami-Dade	2015	RUN	1
Miami-Dade	2015	RUN	30
Miami-Dade	2015	RUN	5
Miami-Dade	2015	RUN	26
Miami-Dade	2015	RUN	25
Miami-Dade	2015	RUN	6
Miami-Dade	2015	RUN	8
Miami-Dade	2015	RUN	4
Miami-Dade	2015	RUN	8
Miami-Dade	2015	RUN	10
Miami-Dade	2015	RUN	1
Miami-Dade	2015	RUN	9
Miami-Dade	2015	RUN	8
Miami-Dade	2015	RUN	4
Miami-Dade	2015	RUN	5
Miami-Dade	2015	RUN	5
Miami-Dade	2015	RUN	17
Miami-Dade	2015	RUN	20
Miami-Dade	2015	RUN	19
Miami-Dade	2015	RUN	18
Miami-Dade	2015	RUN	4
Miami-Dade	2015	RUN	14
Miami-Dade	2015	RUN	15
Miami-Dade	2015	RUN	12
Miami-Dade	2015	RUN	1
Miami-Dade	2015	RUN	9
Miami-Dade	2015	RUN	1
Miami-Dade	2015	RUN	3
Miami-Dade	2015	RUN	9
Miami-Dade	2015	RUN	13
Miami-Dade	2015	RUN	2
Miami-Dade	2015	RUN	2
Miami-Dade	2015	RUN	10
Miami-Dade	2015	RUN	9
Miami-Dade	2015	RUN	2
Miami-Dade	2015	RUN	2
Miami-Dade	2015	RUN	2
Miami-Dade	2015	RUN	1
Miami-Dade	2015	RUN	3
Miami-Dade	2015	RUN	2
Miami-Dade	2015	RUN	1
Miami-Dade	2015	RUN	2
Miami-Dade	2015	RUN	10
Miami-Dade	2015	RUN	1
Miami-Dade	2015	RUN	3
Miami-Dade	2015	RUN	5

CNTYNM	YEAR	MODE	TACTCNT
Miami-Dade	2015	RUN	2
Miami-Dade	2015	RUN	10
Miami-Dade	2015	RUN	9
Miami-Dade	2015	RUN	1
Miami-Dade	2015	RUN	15
Miami-Dade	2015	RUN	2
Miami-Dade	2015	RUN	2
Miami-Dade	2015	RUN	1
Miami-Dade	2015	RUN	1
Miami-Dade	2015	RUN	1
Miami-Dade	2015	RUN	1
Miami-Dade	2015	RUN	1
Miami-Dade	2015	RUN	8
Miami-Dade	2015	RUN	10
Miami-Dade	2015	RUN	2
Miami-Dade	2015	RUN	1
Miami-Dade	2015	RUN	1
Miami-Dade	2015	RUN	2
Miami-Dade	2015	RUN	14
Miami-Dade	2015	RUN	2
Miami-Dade	2015	RUN	1
Miami-Dade	2015	RUN	1
Miami-Dade	2015	RUN	1
Miami-Dade	2015	RUN	10
Miami-Dade	2015	RUN	1
Miami-Dade	2015	RUN	2
Miami-Dade	2015	RUN	10
Miami-Dade	2015	RUN	2
Miami-Dade	2015	RUN	2
Miami-Dade	2015	RUN	2
Miami-Dade	2015	RUN	1
Miami-Dade	2015	RUN	2
Miami-Dade	2015	RUN	9
Miami-Dade	2015	RUN	10
Miami-Dade	2015	RUN	5
Miami-Dade	2015	RUN	10
Miami-Dade	2015	RUN	8
Miami-Dade	2015	RUN	8
Miami-Dade	2015	RUN	1
Miami-Dade	2015	RUN	10
Miami-Dade	2015	RUN	1
Miami-Dade	2015	RUN	9
Miami-Dade	2015	RUN	2
Miami-Dade	2015	RUN	2
Miami-Dade	2015	RUN	2
Miami-Dade	2015	RUN	1
Miami-Dade	2015	RUN	12
Miami-Dade	2015	RUN	1
Miami-Dade	2015	RUN	2
Miami-Dade	2015	RUN	33
Miami-Dade	2015	RUN	5

CNTYNM	YEAR	MODE	TACTCNT
Miami-Dade	2015	RUN	1
Miami-Dade	2015	RUN	7
Miami-Dade	2015	RUN	1
Miami-Dade	2015	RUN	2
Miami-Dade	2015	RUN	1
Miami-Dade	2015	RUN	1
Miami-Dade	2015	RUN	18
Miami-Dade	2015	RUN	17
Miami-Dade	2015	RUN	6
Miami-Dade	2015	RUN	2
Miami-Dade	2015	RUN	2
Miami-Dade	2015	RUN	2
Miami-Dade	2015	RUN	1
Miami-Dade	2015	RUN	12
Miami-Dade	2015	RUN	1
Miami-Dade	2015	RUN	3
Miami-Dade	2015	RUN	3
Miami-Dade	2015	RUN	5
Miami-Dade	2015	RUN	2
Miami-Dade	2015	RUN	1
Miami-Dade	2015	RUN	1
Miami-Dade	2015	RUN	8
Miami-Dade	2015	RUN	8
Miami-Dade	2015	RUN	2
Miami-Dade	2015	RUN	4
Miami-Dade	2015	RUN	9
Miami-Dade	2015	RUN	1
Miami-Dade	2015	RUN	6
Miami-Dade	2015	RUN	10
Miami-Dade	2015	RUN	2
Miami-Dade	2015	RUN	2
Miami-Dade	2015	RUN	1
Miami-Dade	2015	RUN	1
Miami-Dade	2015	RUN	4
Miami-Dade	2015	RUN	1
Miami-Dade	2015	RUN	3
Miami-Dade	2015	RUN	7
Miami-Dade	2015	RUN	5
Miami-Dade	2015	RUN	6
Miami-Dade	2015	RUN	4
Miami-Dade	2015	RUN	10
Miami-Dade	2015	RUN	2
Miami-Dade	2015	RUN	2
Miami-Dade	2015	RUN	8
Miami-Dade	2015	RUN	8
Miami-Dade	2015	RUN	1
Miami-Dade	2015	RUN	6
Miami-Dade	2015	RUN	2
Miami-Dade	2015	RUN	4
Miami-Dade	2015	RUN	5
Miami-Dade	2015	RUN	3

CNTYNM	YEAR	MODE	TACTCNT
Miami-Dade	2015	RUN	1
Miami-Dade	2015	RUN	1
Miami-Dade	2015	RUN	1
Miami-Dade	2015	RUN	1
Miami-Dade	2015	RUN	2
Miami-Dade	2015	RUN	3
Miami-Dade	2015	RUN	2
Miami-Dade	2015	RUN	1
Miami-Dade	2015	RUN	1
Miami-Dade	2015	RUN	1
Miami-Dade	2015	RUN	3
Miami-Dade	2015	RUN	2
Miami-Dade	2015	RUN	3
Miami-Dade	2015	RUN	1
Miami-Dade	2015	RUN	1
Miami-Dade	2015	RUN	1
Miami-Dade	2015	RUN	1
Miami-Dade	2015	RUN	1
Miami-Dade	2015	RUN	1
Miami-Dade	2015	RUN	1
Miami-Dade	2015	RUN	1
Miami-Dade	2015	RUN	27
Miami-Dade	2015	RUN	4
Miami-Dade	2015	RUN	42
Miami-Dade	2015	RUN	27
Miami-Dade	2015	RUN	1
Miami-Dade	2015	RUN	1
Miami-Dade	2015	RUN	1
Miami-Dade	2015	RUN	2
Miami-Dade	2015	RUN	2
Miami-Dade	2015	RUN	2
Miami-Dade	2015	RUN	2
Miami-Dade	2015	RUN	3
Miami-Dade	2015	RUN	2
Miami-Dade	2015	RUN	3
Miami-Dade	2015	RUN	10
Miami-Dade	2015	RUN	2
Miami-Dade	2015	RUN	3
Miami-Dade	2015	RUN	1
Miami-Dade	2015	RUN	3
Miami-Dade	2015	RUN	2
Miami-Dade	2015	RUN	3
Miami-Dade	2015	RUN	2
Miami-Dade	2015	RUN	2
Miami-Dade	2015	RUN	3
Miami-Dade	2015	RUN	3
Miami-Dade	2015	RUN	2
Miami-Dade	2015	RUN	1
Miami-Dade	2015	RUN	1
Miami-Dade	2015	RUN	1
Miami-Dade	2015	RUN	1

CNTYNM	YEAR	MODE	TACTCNT
Miami-Dade	2015	RUN	2
Miami-Dade	2015	RUN	42
Miami-Dade	2015	RUN	1
Miami-Dade	2015	RUN	3
Miami-Dade	2015	RUN	2
Miami-Dade	2015	RUN	2
Miami-Dade	2015	RUN	3
Miami-Dade	2015	RUN	1
Miami-Dade	2015	RUN	1
Miami-Dade	2015	RUN	2
Miami-Dade	2015	RUN	1
Miami-Dade	2015	RUN	2
Miami-Dade	2015	RUN	37
Miami-Dade	2015	RUN	4
Miami-Dade	2015	RUN	2
Miami-Dade	2015	RUN	38
Miami-Dade	2015	RUN	14
Miami-Dade	2015	RUN	2
Miami-Dade	2015	RUN	4
Miami-Dade	2015	RUN	6
Miami-Dade	2015	RUN	3
Miami-Dade	2015	RUN	1
Miami-Dade	2015	RUN	2
Miami-Dade	2015	RUN	2
Miami-Dade	2015	RUN	1
Miami-Dade	2015	RUN	4
Miami-Dade	2015	RUN	7
Miami-Dade	2015	RUN	2
Miami-Dade	2015	RUN	1
Miami-Dade	2015	RUN	1
Miami-Dade	2015	RUN	6
Miami-Dade	2015	RUN	14
Miami-Dade	2015	RUN	1
Miami-Dade	2015	RUN	5
Miami-Dade	2015	RUN	9
Miami-Dade	2015	RUN	9
Miami-Dade	2015	RUN	3
Miami-Dade	2015	RUN	14
Miami-Dade	2015	RUN	3
Miami-Dade	2015	RUN	3
Miami-Dade	2015	RUN	1
Miami-Dade	2015	RUN	8
Miami-Dade	2015	RUN	15
Miami-Dade	2015	RUN	3
Miami-Dade	2015	RUN	13
Miami-Dade	2015	RUN	2
Miami-Dade	2015	RUN	5
Miami-Dade	2015	RUN	5
Miami-Dade	2015	RUN	16
Miami-Dade	2015	RUN	10
Miami-Dade	2015	RUN	13

CNTYNM	YEAR	MODE	TACTCNT
Miami-Dade	2015	RUN	1
Miami-Dade	2015	RUN	1
Miami-Dade	2015	RUN	10
Miami-Dade	2015	RUN	3
Miami-Dade	2015	RUN	4
Miami-Dade	2015	RUN	4
Miami-Dade	2015	RUN	3
Miami-Dade	2015	RUN	9
Miami-Dade	2015	RUN	6
Miami-Dade	2015	RUN	1
Miami-Dade	2015	RUN	11
Miami-Dade	2015	RUN	1
Miami-Dade	2015	RUN	9
Miami-Dade	2015	RUN	2
Miami-Dade	2015	RUN	4
Miami-Dade	2015	RUN	1
Miami-Dade	2015	RUN	5
Miami-Dade	2015	RUN	7
Miami-Dade	2015	RUN	1
Miami-Dade	2015	RUN	4
Miami-Dade	2015	RUN	14
Miami-Dade	2015	RUN	1
Miami-Dade	2015	RUN	1
Miami-Dade	2015	RUN	3
Miami-Dade	2015	RUN	5
Miami-Dade	2015	RUN	4
Miami-Dade	2015	RUN	5
Miami-Dade	2015	RUN	14
Miami-Dade	2015	RUN	1
Miami-Dade	2015	RUN	3
Miami-Dade	2015	RUN	1
Miami-Dade	2015	RUN	13
Miami-Dade	2015	RUN	10
Miami-Dade	2015	RUN	1
Miami-Dade	2015	RUN	9
Miami-Dade	2015	RUN	3
Miami-Dade	2015	RUN	24
Miami-Dade	2015	RUN	25
Miami-Dade	2015	RUN	24
Miami-Dade	2015	RUN	16
Miami-Dade	2015	RUN	18
Miami-Dade	2015	RUN	22
Miami-Dade	2015	RUN	1
Miami-Dade	2015	RUN	23
Miami-Dade	2015	RUN	27
Miami-Dade	2015	RUN	33
Miami-Dade	2015	RUN	32
Miami-Dade	2015	RUN	32
Miami-Dade	2015	RUN	1
Miami-Dade	2015	RUN	1
Miami-Dade	2015	RUN	36

CNTYNM	YEAR	MODE	TACTCNT
Miami-Dade	2015	RUN	1
Miami-Dade	2015	RUN	2
Miami-Dade	2015	RUN	36
Miami-Dade	2015	RUN	13
Miami-Dade	2015	RUN	2
Miami-Dade	2015	RUN	36
Miami-Dade	2015	RUN	13
Miami-Dade	2015	RUN	5
Miami-Dade	2015	RUN	38
Miami-Dade	2015	RUN	1
Miami-Dade	2015	RUN	11
Miami-Dade	2015	RUN	33
Miami-Dade	2015	RUN	5
Miami-Dade	2015	RUN	61
Miami-Dade	2015	RUN	46
Miami-Dade	2015	RUN	2
Miami-Dade	2015	RUN	18
Miami-Dade	2015	RUN	13
Miami-Dade	2015	RUN	3
Miami-Dade	2015	RUN	22
Miami-Dade	2015	RUN	5
Miami-Dade	2015	RUN	39
Miami-Dade	2015	RUN	5
Miami-Dade	2015	RUN	33
Miami-Dade	2015	RUN	24
Miami-Dade	2015	RUN	52
Miami-Dade	2015	RUN	36
Miami-Dade	2015	RUN	9
Miami-Dade	2015	RUN	35
Miami-Dade	2015	RUN	14
Miami-Dade	2015	RUN	19
Miami-Dade	2015	RUN	30
Miami-Dade	2015	RUN	4
Miami-Dade	2015	RUN	36
Miami-Dade	2015	RUN	5
Miami-Dade	2015	RUN	54
Miami-Dade	2015	RUN	71
Miami-Dade	2015	RUN	72
Miami-Dade	2015	RUN	24
Miami-Dade	2015	RUN	54
Miami-Dade	2015	RUN	54
Miami-Dade	2015	RUN	21
Miami-Dade	2015	RUN	5
Miami-Dade	2015	RUN	10
Miami-Dade	2015	RUN	20
Miami-Dade	2015	RUN	65
Miami-Dade	2015	RUN	2
Miami-Dade	2015	RUN	3
Miami-Dade	2015	RUN	3
Miami-Dade	2015	RUN	2
Miami-Dade	2015	RUN	3

CNTYNM	YEAR	MODE	TACTCNT
Miami-Dade	2015	RUN	22
Miami-Dade	2015	RUN	22
Miami-Dade	2015	RUN	4
Miami-Dade	2015	RUN	23
Miami-Dade	2015	RUN	60
Miami-Dade	2015	RUN	20
Miami-Dade	2015	RUN	37
Miami-Dade	2015	RUN	6
Miami-Dade	2015	RUN	4
Miami-Dade	2015	RUN	67
Miami-Dade	2015	RUN	22
Miami-Dade	2015	RUN	4
Miami-Dade	2015	RUN	22
Miami-Dade	2015	RUN	22
Miami-Dade	2015	RUN	26
Miami-Dade	2015	RUN	39
Miami-Dade	2015	RUN	6
Miami-Dade	2015	RUN	20
Miami-Dade	2015	RUN	26
Miami-Dade	2015	RUN	65
Miami-Dade	2015	RUN	17
Miami-Dade	2015	RUN	2
Miami-Dade	2015	RUN	38
Miami-Dade	2015	RUN	3
Miami-Dade	2015	RUN	9
Miami-Dade	2015	RUN	13
Miami-Dade	2015	RUN	54
Miami-Dade	2015	RUN	7
Miami-Dade	2015	RUN	4
Miami-Dade	2015	RUN	4
Miami-Dade	2015	RUN	36
Miami-Dade	2015	RUN	13
Miami-Dade	2015	RUN	8
Miami-Dade	2015	RUN	10
Miami-Dade	2015	RUN	37
Miami-Dade	2015	RUN	1
Miami-Dade	2015	RUN	9
Miami-Dade	2015	RUN	8
Miami-Dade	2015	RUN	52
Miami-Dade	2015	RUN	1
Miami-Dade	2015	RUN	1
Miami-Dade	2015	RUN	36
Miami-Dade	2015	RUN	35
Miami-Dade	2015	RUN	3
Miami-Dade	2015	RUN	16
Miami-Dade	2015	RUN	2
Miami-Dade	2015	RUN	53
Miami-Dade	2015	RUN	35
Miami-Dade	2015	RUN	10
Miami-Dade	2015	RUN	9
Miami-Dade	2015	RUN	3

CNTYNM	YEAR	MODE	TACTCNT
Miami-Dade	2015	RUN	2
Miami-Dade	2015	RUN	34
Miami-Dade	2015	RUN	1
Miami-Dade	2015	RUN	35
Miami-Dade	2015	RUN	13
Miami-Dade	2015	RUN	36
Miami-Dade	2015	RUN	35
Miami-Dade	2015	RUN	1
Miami-Dade	2015	RUN	26
Miami-Dade	2015	RUN	1
Miami-Dade	2015	RUN	28
Miami-Dade	2015	RUN	56
Miami-Dade	2015	RUN	51
Miami-Dade	2015	RUN	57
Miami-Dade	2015	RUN	57
Miami-Dade	2015	RUN	54
Miami-Dade	2015	RUN	1
Miami-Dade	2015	RUN	56
Miami-Dade	2015	RUN	54
Miami-Dade	2015	RUN	56
Miami-Dade	2015	RUN	1
Miami-Dade	2015	RUN	1
Miami-Dade	2015	RUN	10
Miami-Dade	2015	RUN	1
Miami-Dade	2015	RUN	1
Miami-Dade	2015	RUN	11
Miami-Dade	2015	RUN	1
Miami-Dade	2015	RUN	5
Miami-Dade	2015	RUN	1
Miami-Dade	2015	RUN	12
Miami-Dade	2015	RUN	6
Miami-Dade	2015	RUN	11
Miami-Dade	2015	RUN	1
Miami-Dade	2015	RUN	45
Miami-Dade	2015	RUN	1
Miami-Dade	2015	RUN	6
Miami-Dade	2015	RUN	7
Miami-Dade	2015	RUN	2
Miami-Dade	2015	RUN	2
Miami-Dade	2015	RUN	2
Miami-Dade	2015	RUN	14
Miami-Dade	2015	RUN	4
Miami-Dade	2015	RUN	13
Miami-Dade	2015	RUN	9
Miami-Dade	2015	RUN	11
Miami-Dade	2015	RUN	13
Miami-Dade	2015	RUN	1
Miami-Dade	2015	RUN	2
Miami-Dade	2015	RUN	2
Miami-Dade	2015	RUN	15
Miami-Dade	2015	RUN	2

CNTYNM	YEAR	MODE	TACTCNT
Miami-Dade	2015	RUN	9
Miami-Dade	2015	RUN	41
Miami-Dade	2015	RUN	9
Miami-Dade	2015	RUN	2
Miami-Dade	2015	RUN	12
Miami-Dade	2015	RUN	2
Miami-Dade	2015	RUN	14
Miami-Dade	2015	RUN	13
Miami-Dade	2015	RUN	15
Miami-Dade	2015	RUN	8
Miami-Dade	2015	RUN	5
Miami-Dade	2015	RUN	4
Miami-Dade	2015	RUN	9
Miami-Dade	2015	RUN	4
Miami-Dade	2015	RUN	2
Miami-Dade	2015	RUN	1
Miami-Dade	2015	RUN	46
Miami-Dade	2015	RUN	37
Miami-Dade	2015	RUN	7
Miami-Dade	2015	RUN	4
Miami-Dade	2015	RUN	52
Miami-Dade	2015	RUN	8
Miami-Dade	2015	RUN	2
Miami-Dade	2015	RUN	2
Miami-Dade	2015	RUN	3
Miami-Dade	2015	RUN	45
Miami-Dade	2015	RUN	4
Miami-Dade	2015	RUN	7
Miami-Dade	2015	RUN	6
Miami-Dade	2015	RUN	2
Miami-Dade	2015	RUN	2
Miami-Dade	2015	RUN	5
Miami-Dade	2015	RUN	4
Miami-Dade	2015	RUN	4
Miami-Dade	2015	RUN	4
Miami-Dade	2015	RUN	5
Miami-Dade	2015	RUN	3
Miami-Dade	2015	RUN	51
Miami-Dade	2015	RUN	2
Miami-Dade	2015	RUN	8
Miami-Dade	2015	RUN	50
Miami-Dade	2015	RUN	7
Miami-Dade	2015	RUN	11
Miami-Dade	2015	RUN	6
Miami-Dade	2015	RUN	49
Miami-Dade	2015	RUN	5
Miami-Dade	2015	RUN	2
Miami-Dade	2015	RUN	2
Miami-Dade	2015	RUN	2
Miami-Dade	2015	RUN	8
Miami-Dade	2015	RUN	6

CNTYNM	YEAR	MODE	TACTCNT
Miami-Dade	2015	RUN	3
Miami-Dade	2015	RUN	2
Miami-Dade	2015	RUN	108
Miami-Dade	2015	RUN	4
Miami-Dade	2015	RUN	3
Miami-Dade	2015	RUN	65
Miami-Dade	2015	RUN	1
Miami-Dade	2015	RUN	66
Miami-Dade	2015	RUN	2
Miami-Dade	2015	RUN	9
Miami-Dade	2015	RUN	65
Miami-Dade	2015	RUN	6
Miami-Dade	2015	RUN	66
Miami-Dade	2015	RUN	1
Miami-Dade	2015	RUN	2
Miami-Dade	2015	RUN	9
Miami-Dade	2015	RUN	68
Miami-Dade	2015	RUN	66
Miami-Dade	2015	RUN	2
Miami-Dade	2015	RUN	66
Miami-Dade	2015	RUN	61
Miami-Dade	2015	RUN	1
Miami-Dade	2015	RUN	59
Miami-Dade	2015	RUN	57
Miami-Dade	2015	RUN	2
Miami-Dade	2015	RUN	79
Miami-Dade	2015	RUN	40
Miami-Dade	2015	RUN	1
Miami-Dade	2015	RUN	38
Miami-Dade	2015	RUN	3
Miami-Dade	2015	RUN	30
Miami-Dade	2015	RUN	5
Miami-Dade	2015	RUN	10
Miami-Dade	2015	RUN	14
Miami-Dade	2015	RUN	9
Miami-Dade	2015	RUN	89
Miami-Dade	2015	RUN	2
Miami-Dade	2015	RUN	2
Miami-Dade	2015	RUN	8
Miami-Dade	2015	RUN	1
Miami-Dade	2015	RUN	7
Miami-Dade	2015	RUN	7
Miami-Dade	2015	RUN	3
Miami-Dade	2015	RUN	12
Miami-Dade	2015	RUN	19
Miami-Dade	2015	RUN	11
Miami-Dade	2015	RUN	78
Miami-Dade	2015	RUN	5
Miami-Dade	2015	RUN	3
Miami-Dade	2015	RUN	11
Miami-Dade	2015	RUN	13

CNTYNM	YEAR	MODE	TACTCNT
Miami-Dade	2015	RUN	14
Miami-Dade	2015	RUN	10
Miami-Dade	2015	RUN	11
Miami-Dade	2015	RUN	19
Miami-Dade	2015	RUN	1
Miami-Dade	2015	RUN	8
Miami-Dade	2015	RUN	1
Miami-Dade	2015	RUN	4
Miami-Dade	2015	RUN	2
Miami-Dade	2015	RUN	2
Miami-Dade	2015	RUN	2
Miami-Dade	2015	RUN	80
Miami-Dade	2015	RUN	2
Miami-Dade	2015	RUN	19
Miami-Dade	2015	RUN	6
Miami-Dade	2015	RUN	2
Miami-Dade	2015	RUN	2
Miami-Dade	2015	RUN	4
Miami-Dade	2015	RUN	22
Miami-Dade	2015	RUN	18
Miami-Dade	2015	RUN	5
Miami-Dade	2015	RUN	3
Miami-Dade	2015	RUN	58
Miami-Dade	2015	RUN	7
Miami-Dade	2015	RUN	25
Miami-Dade	2015	RUN	1
Miami-Dade	2015	RUN	21
Miami-Dade	2015	RUN	16
Miami-Dade	2015	RUN	2
Miami-Dade	2015	RUN	5
Miami-Dade	2015	RUN	26
Miami-Dade	2015	RUN	2
Miami-Dade	2015	RUN	18
Miami-Dade	2015	RUN	21
Miami-Dade	2015	RUN	22
Miami-Dade	2015	RUN	52
Miami-Dade	2015	RUN	81
Miami-Dade	2015	RUN	34
Miami-Dade	2015	RUN	22
Miami-Dade	2015	RUN	3
Miami-Dade	2015	RUN	45
Miami-Dade	2015	RUN	1
Miami-Dade	2015	RUN	42
Miami-Dade	2015	RUN	19
Miami-Dade	2015	RUN	31
Miami-Dade	2015	RUN	30
Miami-Dade	2015	RUN	29
Miami-Dade	2015	RUN	27
Miami-Dade	2015	RUN	22
Miami-Dade	2015	RUN	23
Miami-Dade	2015	RUN	22

CNTYNM	YEAR	MODE	TACTCNT
Miami-Dade	2015	RUN	23
Miami-Dade	2015	RUN	23
Miami-Dade	2015	RUN	21
Miami-Dade	2015	RUN	22
Miami-Dade	2015	RUN	21
Miami-Dade	2015	RUN	1
Miami-Dade	2015	RUN	13
Miami-Dade	2015	RUN	20
Miami-Dade	2015	RUN	16
Miami-Dade	2015	RUN	9
Miami-Dade	2015	RUN	13
Miami-Dade	2015	RUN	13
Miami-Dade	2015	RUN	3
Miami-Dade	2015	RUN	18
Miami-Dade	2015	RUN	32
Miami-Dade	2015	RUN	6
Miami-Dade	2015	RUN	34
Miami-Dade	2015	RUN	1
Miami-Dade	2015	RUN	2
Miami-Dade	2015	RUN	241
Miami-Dade	2015	RUN	5
Miami-Dade	2015	RUN	4
Miami-Dade	2015	RUN	2
Miami-Dade	2015	RUN	11
Miami-Dade	2015	RUN	37
Miami-Dade	2015	RUN	1
Miami-Dade	2015	RUN	2
Miami-Dade	2015	RUN	2
Miami-Dade	2015	RUN	1
Miami-Dade	2015	RUN	3
Miami-Dade	2015	RUN	1
Miami-Dade	2015	RUN	17
Miami-Dade	2015	RUN	16
Miami-Dade	2015	RUN	16
Miami-Dade	2015	RUN	3
Miami-Dade	2015	RUN	35
Miami-Dade	2015	RUN	1
Miami-Dade	2015	RUN	16
Miami-Dade	2015	RUN	12
Miami-Dade	2015	RUN	4
Miami-Dade	2015	RUN	3
Miami-Dade	2015	RUN	1
Miami-Dade	2015	RUN	1
Miami-Dade	2015	RUN	1
Miami-Dade	2015	RUN	5
Miami-Dade	2015	RUN	9
Miami-Dade	2015	RUN	10
Miami-Dade	2015	RUN	3
Miami-Dade	2015	RUN	48
Miami-Dade	2015	RUN	3
Miami-Dade	2015	RUN	2

CNTYNM	YEAR	MODE	TACTCNT
Miami-Dade	2015	RUN	2
Miami-Dade	2015	RUN	1
Miami-Dade	2015	RUN	1
Miami-Dade	2015	RUN	3
Miami-Dade	2015	RUN	3
Miami-Dade	2015	RUN	3
Miami-Dade	2015	RUN	2
Miami-Dade	2015	RUN	3
Miami-Dade	2015	RUN	2
Miami-Dade	2015	RUN	3
Miami-Dade	2015	RUN	2
Miami-Dade	2015	RUN	3
Miami-Dade	2015	RUN	1
Miami-Dade	2015	RUN	2
Miami-Dade	2015	RUN	6
Miami-Dade	2015	RUN	1
Miami-Dade	2015	RUN	51
Miami-Dade	2015	RUN	4
Miami-Dade	2015	RUN	6
Miami-Dade	2015	RUN	47
Miami-Dade	2015	RUN	7
Miami-Dade	2015	RUN	4
Miami-Dade	2015	RUN	16
Miami-Dade	2015	RUN	16
Miami-Dade	2015	RUN	14
Miami-Dade	2015	RUN	5
Miami-Dade	2015	RUN	14
Miami-Dade	2015	RUN	11
Miami-Dade	2015	RUN	4
Miami-Dade	2015	RUN	14
Miami-Dade	2015	RUN	8
Miami-Dade	2015	RUN	5
Miami-Dade	2015	RUN	4
Miami-Dade	2015	RUN	25
Miami-Dade	2015	RUN	15
Miami-Dade	2015	RUN	13
Miami-Dade	2015	RUN	13
Miami-Dade	2015	RUN	4
Miami-Dade	2015	RUN	24
Miami-Dade	2015	RUN	17
Miami-Dade	2015	RUN	1
Miami-Dade	2015	RUN	15
Miami-Dade	2015	RUN	1
Miami-Dade	2015	RUN	4
Miami-Dade	2015	RUN	43
Miami-Dade	2015	RUN	28
Miami-Dade	2015	RUN	34
Miami-Dade	2015	RUN	32
Miami-Dade	2015	RUN	33
Miami-Dade	2015	RUN	30
Miami-Dade	2015	RUN	32

CNTYNM	YEAR	MODE	TACTCNT
Miami-Dade	2015	RUN	67
Miami-Dade	2015	RUN	1
Miami-Dade	2015	RUN	2
Miami-Dade	2015	RUN	22
Miami-Dade	2015	RUN	2
Miami-Dade	2015	RUN	32
Miami-Dade	2015	RUN	35
Miami-Dade	2015	RUN	3
Miami-Dade	2015	RUN	2
Miami-Dade	2015	RUN	2
Miami-Dade	2015	RUN	4
Miami-Dade	2015	RUN	76
Miami-Dade	2015	RUN	30
Miami-Dade	2015	RUN	19
Miami-Dade	2015	RUN	23
Miami-Dade	2015	RUN	26
Miami-Dade	2015	RUN	4
Miami-Dade	2015	RUN	1
Miami-Dade	2015	RUN	3
Miami-Dade	2015	RUN	84
Miami-Dade	2015	RUN	3
Miami-Dade	2015	RUN	73
Miami-Dade	2015	RUN	2
Miami-Dade	2015	RUN	1
Miami-Dade	2015	RUN	1
Miami-Dade	2015	RUN	1
Miami-Dade	2015	RUN	2
Miami-Dade	2015	RUN	3
Miami-Dade	2015	RUN	4
Miami-Dade	2015	RUN	1
Miami-Dade	2015	RUN	3
Miami-Dade	2015	RUN	3
Miami-Dade	2015	RUN	4
Miami-Dade	2015	RUN	37
Miami-Dade	2015	RUN	36
Miami-Dade	2015	RUN	1
Miami-Dade	2015	RUN	168
Miami-Dade	2015	RUN	19
Miami-Dade	2015	RUN	41
Miami-Dade	2015	RUN	12
Miami-Dade	2015	RUN	5
Miami-Dade	2015	RUN	21
Miami-Dade	2015	RUN	1
Miami-Dade	2015	RUN	52
Miami-Dade	2015	RUN	17
Miami-Dade	2015	RUN	4
Miami-Dade	2015	RUN	5
Miami-Dade	2015	RUN	13
Miami-Dade	2015	RUN	12
Miami-Dade	2015	RUN	2
Miami-Dade	2015	RUN	34

CNTYNM	YEAR	MODE	TACTCNT
Miami-Dade	2015	RUN	4
Miami-Dade	2015	RUN	2
Miami-Dade	2015	RUN	6
Miami-Dade	2015	RUN	2
Miami-Dade	2015	RUN	10
Miami-Dade	2015	RUN	3
Miami-Dade	2015	RUN	2
Miami-Dade	2015	RUN	2
Miami-Dade	2015	RUN	38
Miami-Dade	2015	RUN	43
Miami-Dade	2015	RUN	2
Miami-Dade	2015	RUN	6
Miami-Dade	2015	RUN	7
Miami-Dade	2015	RUN	4
Miami-Dade	2015	RUN	3
Miami-Dade	2015	RUN	2
Miami-Dade	2015	RUN	31
Miami-Dade	2015	RUN	2
Miami-Dade	2015	RUN	1
Miami-Dade	2015	RUN	3
Miami-Dade	2015	RUN	6
Miami-Dade	2015	RUN	7
Miami-Dade	2015	RUN	4
Miami-Dade	2015	RUN	9
Miami-Dade	2015	RUN	7
Miami-Dade	2015	RUN	18
Miami-Dade	2015	RUN	15
Miami-Dade	2015	RUN	5
Miami-Dade	2015	RUN	4
Miami-Dade	2015	RUN	4
Miami-Dade	2015	RUN	7
Miami-Dade	2015	RUN	2
Miami-Dade	2015	RUN	21
Miami-Dade	2015	RUN	2
Miami-Dade	2015	RUN	13
Miami-Dade	2015	RUN	47
Miami-Dade	2015	RUN	44
Miami-Dade	2015	RUN	45
Miami-Dade	2015	RUN	10
Miami-Dade	2015	RUN	12
Miami-Dade	2015	RUN	12
Miami-Dade	2015	RUN	87
Miami-Dade	2015	RUN	95
Miami-Dade	2015	RUN	7
Miami-Dade	2015	RUN	6
Miami-Dade	2015	RUN	3
Miami-Dade	2015	RUN	3
Miami-Dade	2015	RUN	3
Miami-Dade	2015	RUN	33
Miami-Dade	2015	RUN	60
Miami-Dade	2015	RUN	52

CNTYNM	YEAR	MODE	TACTCNT
Miami-Dade	2015	RUN	119
Miami-Dade	2015	RUN	45
Miami-Dade	2015	RUN	45
Miami-Dade	2015	RUN	29
Miami-Dade	2015	RUN	39
Miami-Dade	2015	RUN	1
Miami-Dade	2015	RUN	1
Miami-Dade	2015	RUN	1
Miami-Dade	2015	RUN	6
Miami-Dade	2015	RUN	6
Miami-Dade	2015	RUN	9
Miami-Dade	2015	RUN	1
Miami-Dade	2015	RUN	1
Miami-Dade	2015	RUN	1630
Miami-Dade	2015	RUN	8
Miami-Dade	2015	RUN	199
Miami-Dade	2015	RUN	3
Miami-Dade	2015	RUN	12
Miami-Dade	2015	RUN	3
Miami-Dade	2015	RUN	5
Miami-Dade	2015	RUN	4
Miami-Dade	2015	RUN	4
Miami-Dade	2015	RUN	9
Miami-Dade	2015	RUN	11
Miami-Dade	2015	RUN	13
Miami-Dade	2015	RUN	13
Miami-Dade	2015	RUN	15
Miami-Dade	2015	RUN	12
Miami-Dade	2015	RUN	11
Miami-Dade	2015	RUN	11
Miami-Dade	2015	RUN	3
Miami-Dade	2015	RUN	5
Miami-Dade	2015	RUN	42
Miami-Dade	2015	RUN	40
Miami-Dade	2015	RUN	44
Miami-Dade	2015	RUN	23
Miami-Dade	2015	RUN	24
Miami-Dade	2015	RUN	44
Miami-Dade	2015	RUN	43
Miami-Dade	2015	RUN	15
Miami-Dade	2015	RUN	20
Miami-Dade	2015	RUN	21
Miami-Dade	2015	RUN	43
Miami-Dade	2015	RUN	37
Miami-Dade	2015	RUN	43
Miami-Dade	2015	RUN	64
Miami-Dade	2015	RUN	31
Miami-Dade	2015	RUN	35
Miami-Dade	2015	RUN	63
Miami-Dade	2015	RUN	23
Miami-Dade	2015	RUN	89

CNTYNM	YEAR	MODE	TACTCNT
Miami-Dade	2015	RUN	69
Miami-Dade	2015	RUN	41
Miami-Dade	2015	RUN	43
Miami-Dade	2015	RUN	45
Miami-Dade	2015	RUN	75
Miami-Dade	2015	RUN	17
Miami-Dade	2015	RUN	17
Miami-Dade	2015	RUN	94
Miami-Dade	2015	RUN	122
Miami-Dade	2015	RUN	1
Miami-Dade	2015	RUN	2
Miami-Dade	2015	RUN	26
Miami-Dade	2015	RUN	45
Miami-Dade	2015	RUN	31
Miami-Dade	2015	RUN	10
Miami-Dade	2015	RUN	10
Miami-Dade	2015	RUN	7
Miami-Dade	2015	RUN	18
Miami-Dade	2015	RUN	35
Miami-Dade	2015	RUN	7
Miami-Dade	2015	RUN	8
Miami-Dade	2015	RUN	10
Miami-Dade	2015	RUN	9
Miami-Dade	2015	RUN	3
Miami-Dade	2015	RUN	3
Miami-Dade	2015	RUN	2
Miami-Dade	2015	RUN	2
Miami-Dade	2015	RUN	2
Miami-Dade	2015	RUN	13
Miami-Dade	2015	RUN	11
Miami-Dade	2015	RUN	3
Miami-Dade	2015	RUN	4
Miami-Dade	2015	RUN	15
Miami-Dade	2015	RUN	59
Miami-Dade	2015	RUN	51
Miami-Dade	2015	RUN	58
Miami-Dade	2015	RUN	6
Miami-Dade	2015	RUN	3
Miami-Dade	2015	RUN	5
Miami-Dade	2015	RUN	3
Miami-Dade	2015	RUN	4
Miami-Dade	2015	RUN	6
Miami-Dade	2015	RUN	6
Miami-Dade	2015	RUN	2
Miami-Dade	2015	RUN	7
Miami-Dade	2015	RUN	2
Miami-Dade	2015	RUN	1
Miami-Dade	2015	RUN	6
Miami-Dade	2015	RUN	1
Miami-Dade	2015	RUN	41
Miami-Dade	2015	RUN	33

CNTYNM	YEAR	MODE	TACTCNT
Miami-Dade	2015	RUN	43
Miami-Dade	2015	RUN	2
Miami-Dade	2015	RUN	2
Miami-Dade	2015	RUN	1
Miami-Dade	2015	RUN	3
Miami-Dade	2015	RUN	30
Miami-Dade	2015	RUN	33
Miami-Dade	2015	RUN	1
Miami-Dade	2015	RUN	3
Miami-Dade	2015	RUN	29
Miami-Dade	2015	RUN	7
Miami-Dade	2015	RUN	43
Miami-Dade	2015	RUN	22
Miami-Dade	2015	RUN	18
Miami-Dade	2015	RUN	15
Miami-Dade	2015	RUN	37
Miami-Dade	2015	RUN	1
Miami-Dade	2015	RUN	3
Miami-Dade	2015	RUN	2
Miami-Dade	2015	RUN	3
Miami-Dade	2015	RUN	3
Miami-Dade	2015	RUN	1
Miami-Dade	2015	RUN	6
Miami-Dade	2015	RUN	1
Miami-Dade	2015	RUN	5
Miami-Dade	2015	RUN	5
Miami-Dade	2015	RUN	2
Miami-Dade	2015	RUN	4
Miami-Dade	2015	RUN	6
Miami-Dade	2015	RUN	9
Miami-Dade	2015	RUN	14
Miami-Dade	2015	RUN	30
Miami-Dade	2015	RUN	39
Miami-Dade	2015	RUN	41
Miami-Dade	2015	RUN	9
Miami-Dade	2015	RUN	45
Miami-Dade	2015	RUN	11
Miami-Dade	2015	RUN	38
Miami-Dade	2015	RUN	3
Miami-Dade	2015	RUN	35
Miami-Dade	2015	RUN	8
Miami-Dade	2015	RUN	35
Miami-Dade	2015	RUN	11
Miami-Dade	2015	RUN	11
Miami-Dade	2015	RUN	15
Miami-Dade	2015	RUN	5
Miami-Dade	2015	RUN	10
Miami-Dade	2015	RUN	15
Miami-Dade	2015	RUN	12
Miami-Dade	2015	RUN	4
Miami-Dade	2015	RUN	5

CNTYNM	YEAR	MODE	TACTCNT
Miami-Dade	2015	RUN	17
Miami-Dade	2015	RUN	35
Miami-Dade	2015	RUN	6
Miami-Dade	2015	RUN	13
Miami-Dade	2015	RUN	3
Miami-Dade	2015	RUN	39
Miami-Dade	2015	RUN	10
Miami-Dade	2015	RUN	20
Miami-Dade	2015	RUN	30
Miami-Dade	2015	RUN	26
Miami-Dade	2015	RUN	10
Miami-Dade	2015	RUN	12
Miami-Dade	2015	RUN	35
Miami-Dade	2015	RUN	15
Miami-Dade	2015	RUN	1
Miami-Dade	2015	RUN	1
Miami-Dade	2015	RUN	12
Miami-Dade	2015	RUN	2
Miami-Dade	2015	RUN	1
Miami-Dade	2015	RUN	3
Miami-Dade	2015	RUN	1
Miami-Dade	2015	RUN	2
Miami-Dade	2015	RUN	3
Miami-Dade	2015	RUN	2
Miami-Dade	2015	RUN	2
Miami-Dade	2015	RUN	4
Miami-Dade	2015	RUN	1
Miami-Dade	2015	RUN	3
Miami-Dade	2015	RUN	3
Miami-Dade	2015	RUN	3
Miami-Dade	2015	RUN	5
Miami-Dade	2015	RUN	2
Miami-Dade	2015	RUN	14
Miami-Dade	2015	RUN	5
Miami-Dade	2015	RUN	2
Miami-Dade	2015	RUN	17
Miami-Dade	2015	RUN	38
Miami-Dade	2015	RUN	2
Miami-Dade	2015	RUN	2
Miami-Dade	2015	RUN	1
Miami-Dade	2015	RUN	1
Miami-Dade	2015	RUN	2
Miami-Dade	2015	RUN	6
Miami-Dade	2015	RUN	1
Miami-Dade	2015	RUN	2
Miami-Dade	2015	RUN	6
Miami-Dade	2015	RUN	13
Miami-Dade	2015	RUN	13
Miami-Dade	2015	RUN	10
Miami-Dade	2015	RUN	12
Miami-Dade	2015	RUN	16

CNTYNM	YEAR	MODE	TACTCNT
Miami-Dade	2015	RUN	16
Miami-Dade	2015	RUN	6
Miami-Dade	2015	RUN	3
Miami-Dade	2015	RUN	1
Miami-Dade	2015	RUN	22
Miami-Dade	2015	RUN	22
Miami-Dade	2015	RUN	1
Miami-Dade	2015	RUN	1
Miami-Dade	2015	RUN	1
Miami-Dade	2015	RUN	1
Miami-Dade	2015	RUN	1
Miami-Dade	2015	RUN	1
Miami-Dade	2015	RUN	1
Miami-Dade	2015	RUN	2
Miami-Dade	2015	RUN	1
Miami-Dade	2015	RUN	1
Miami-Dade	2015	RUN	2
Miami-Dade	2015	RUN	15
Miami-Dade	2015	RUN	38
Miami-Dade	2015	RUN	1
Miami-Dade	2015	RUN	1
Miami-Dade	2015	RUN	35
Miami-Dade	2015	RUN	23
Miami-Dade	2015	RUN	1
Miami-Dade	2015	RUN	19
Miami-Dade	2015	RUN	1
Miami-Dade	2015	RUN	21
Miami-Dade	2015	RUN	21
Miami-Dade	2015	RUN	17
Miami-Dade	2015	RUN	22
Miami-Dade	2015	RUN	2
Miami-Dade	2015	RUN	1
Miami-Dade	2015	RUN	4
Miami-Dade	2015	RUN	34
Miami-Dade	2015	RUN	22
Miami-Dade	2015	RUN	1
Miami-Dade	2015	RUN	1
Miami-Dade	2015	RUN	1
Miami-Dade	2015	RUN	4
Miami-Dade	2015	RUN	4
Miami-Dade	2015	RUN	4
Miami-Dade	2015	RUN	3
Miami-Dade	2015	RUN	3
Miami-Dade	2015	RUN	3
Miami-Dade	2015	RUN	10
Miami-Dade	2015	RUN	10
Miami-Dade	2015	RUN	1
Miami-Dade	2015	RUN	24
Miami-Dade	2015	RUN	32
Miami-Dade	2015	RUN	76

CNTYNM	YEAR	MODE	TACTCNT
Miami-Dade	2015	RUN	79
Miami-Dade	2015	RUN	39
Miami-Dade	2015	RUN	36
Miami-Dade	2015	RUN	65
Miami-Dade	2015	RUN	66
Miami-Dade	2015	RUN	31
Miami-Dade	2015	RUN	6
Miami-Dade	2015	RUN	3
Miami-Dade	2015	RUN	4
Miami-Dade	2015	RUN	5
Miami-Dade	2015	RUN	7
Miami-Dade	2015	RUN	81
Miami-Dade	2015	RUN	16
Miami-Dade	2015	RUN	69
Miami-Dade	2015	RUN	6
Miami-Dade	2015	RUN	5
Miami-Dade	2015	RUN	6
Miami-Dade	2015	RUN	87
Miami-Dade	2015	RUN	86
Miami-Dade	2015	RUN	5
Miami-Dade	2015	RUN	3
Miami-Dade	2015	RUN	16
Miami-Dade	2015	RUN	3
Miami-Dade	2015	RUN	16
Miami-Dade	2015	RUN	5
Miami-Dade	2015	RUN	11
Miami-Dade	2015	RUN	2
Miami-Dade	2015	RUN	2
Miami-Dade	2015	RUN	1
Miami-Dade	2015	RUN	1
Miami-Dade	2015	RUN	1
Miami-Dade	2015	RUN	1
Miami-Dade	2015	RUN	2
Miami-Dade	2015	RUN	1
Miami-Dade	2015	RUN	12
Miami-Dade	2015	RUN	2
Miami-Dade	2015	RUN	2
Miami-Dade	2015	RUN	13
Miami-Dade	2015	RUN	1
Miami-Dade	2015	RUN	2
Miami-Dade	2015	RUN	2
Miami-Dade	2015	RUN	1
Miami-Dade	2015	RUN	2
Miami-Dade	2015	RUN	2
Miami-Dade	2015	RUN	1
Miami-Dade	2015	RUN	3
Miami-Dade	2015	RUN	9
Miami-Dade	2015	RUN	3
Miami-Dade	2015	RUN	1
Miami-Dade	2015	RUN	10
Miami-Dade	2015	RUN	3

CNTYNM	YEAR	MODE	TACTCNT
Miami-Dade	2015	RUN	2
Miami-Dade	2015	RUN	4
Miami-Dade	2015	RUN	5
Miami-Dade	2015	RUN	38
Miami-Dade	2015	RUN	43
Miami-Dade	2015	RUN	18
Miami-Dade	2015	RUN	40
Miami-Dade	2015	RUN	42
Miami-Dade	2015	RUN	43
Miami-Dade	2015	RUN	38
Miami-Dade	2015	RUN	55
Miami-Dade	2015	RUN	60
Miami-Dade	2015	RUN	38
Miami-Dade	2015	RUN	39
Miami-Dade	2015	RUN	39
Miami-Dade	2015	RUN	45
Miami-Dade	2015	RUN	8
Miami-Dade	2015	RUN	7
Miami-Dade	2015	RUN	91
Miami-Dade	2015	RUN	92
Miami-Dade	2015	RUN	3
Miami-Dade	2015	RUN	3
Miami-Dade	2015	RUN	6
Miami-Dade	2015	RUN	4
Miami-Dade	2015	RUN	5
Miami-Dade	2015	RUN	6
Miami-Dade	2015	RUN	1
Miami-Dade	2015	RUN	1
Miami-Dade	2015	RUN	1
Miami-Dade	2015	RUN	2
Miami-Dade	2015	RUN	9
Miami-Dade	2015	RUN	9
Miami-Dade	2015	RUN	32
Miami-Dade	2015	RUN	31
Miami-Dade	2015	RUN	6
Miami-Dade	2015	RUN	6
Miami-Dade	2015	RUN	30
Miami-Dade	2015	RUN	30
Miami-Dade	2015	RUN	10
Miami-Dade	2015	RUN	10
Miami-Dade	2015	RUN	1
Miami-Dade	2015	RUN	2
Miami-Dade	2015	RUN	1
Miami-Dade	2015	RUN	4
Miami-Dade	2015	RUN	3
Miami-Dade	2015	RUN	5
Miami-Dade	2015	RUN	5
Miami-Dade	2015	RUN	3
Miami-Dade	2015	RUN	2
Miami-Dade	2015	RUN	3
Miami-Dade	2015	RUN	3

CNTYNM	YEAR	MODE	TACTCNT
Miami-Dade	2015	RUN	16
Miami-Dade	2015	RUN	16
Miami-Dade	2015	RUN	89
Miami-Dade	2015	RUN	92
Miami-Dade	2015	RUN	75
Miami-Dade	2015	RUN	15
Miami-Dade	2015	RUN	11
Miami-Dade	2015	RUN	12
Miami-Dade	2015	RUN	21
Miami-Dade	2015	RUN	16
Miami-Dade	2015	RUN	18
Miami-Dade	2015	RUN	4
Miami-Dade	2015	RUN	2
Miami-Dade	2015	RUN	52
Miami-Dade	2015	RUN	42
Miami-Dade	2015	RUN	5
Miami-Dade	2015	RUN	18
Miami-Dade	2015	RUN	15
Miami-Dade	2015	RUN	7
Miami-Dade	2015	RUN	7
Miami-Dade	2015	RUN	14
Miami-Dade	2015	RUN	14
Miami-Dade	2015	RUN	27
Miami-Dade	2015	RUN	48
Miami-Dade	2015	RUN	49
Miami-Dade	2015	RUN	40
Miami-Dade	2015	RUN	4
Miami-Dade	2015	RUN	6
Miami-Dade	2015	RUN	5
Miami-Dade	2015	RUN	4
Miami-Dade	2015	RUN	3
Miami-Dade	2015	RUN	4
Miami-Dade	2015	RUN	18
Miami-Dade	2015	RUN	25
Miami-Dade	2015	RUN	1
Miami-Dade	2015	RUN	1
Miami-Dade	2015	RUN	4
Miami-Dade	2015	RUN	1
Miami-Dade	2015	RUN	13
Miami-Dade	2015	RUN	13
Miami-Dade	2015	RUN	5
Miami-Dade	2015	RUN	20
Miami-Dade	2015	RUN	19
Miami-Dade	2015	RUN	18
Miami-Dade	2015	RUN	38
Miami-Dade	2015	RUN	1
Miami-Dade	2015	RUN	1
Miami-Dade	2015	RUN	1
Miami-Dade	2015	RUN	1
Miami-Dade	2015	RUN	1
Miami-Dade	2015	RUN	2

CNTYNM	YEAR	MODE	TACTCNT
Miami-Dade	2015	RUN	2
Miami-Dade	2015	RUN	2
Miami-Dade	2015	RUN	1
Miami-Dade	2015	RUN	3
Miami-Dade	2015	RUN	2
Miami-Dade	2015	RUN	2
Miami-Dade	2015	RUN	3
Miami-Dade	2015	RUN	1
Miami-Dade	2015	RUN	1
Miami-Dade	2015	RUN	1
Miami-Dade	2015	RUN	1
Miami-Dade	2015	RUN	2
Miami-Dade	2015	RUN	7
Miami-Dade	2015	RUN	2
Miami-Dade	2015	RUN	2
Miami-Dade	2015	RUN	1
Miami-Dade	2015	RUN	7
Miami-Dade	2015	RUN	7
Miami-Dade	2015	RUN	1
Miami-Dade	2015	RUN	1
Miami-Dade	2015	RUN	1
Miami-Dade	2015	RUN	1
Miami-Dade	2015	RUN	1
Miami-Dade	2015	RUN	8
Miami-Dade	2015	RUN	1
Miami-Dade	2015	RUN	1
Miami-Dade	2015	RUN	7
Miami-Dade	2015	RUN	4
Miami-Dade	2015	RUN	2
Miami-Dade	2015	RUN	1
Miami-Dade	2015	RUN	1
Miami-Dade	2015	RUN	10
Miami-Dade	2015	RUN	2
Miami-Dade	2015	RUN	17
Miami-Dade	2015	RUN	14
Miami-Dade	2015	RUN	10
Miami-Dade	2015	RUN	11
Miami-Dade	2015	RUN	15
Miami-Dade	2015	RUN	16
Miami-Dade	2015	RUN	1
Miami-Dade	2015	RUN	7
Miami-Dade	2015	RUN	15
Miami-Dade	2015	RUN	9
Miami-Dade	2015	RUN	11
Miami-Dade	2015	RUN	1
Miami-Dade	2015	RUN	5
Miami-Dade	2015	RUN	7
Miami-Dade	2015	RUN	16
Miami-Dade	2015	RUN	15
Miami-Dade	2015	RUN	16

CNTYNM	YEAR	MODE	TACTCNT
Miami-Dade	2015	RUN	13
Miami-Dade	2015	RUN	15
Miami-Dade	2015	RUN	8
Miami-Dade	2015	RUN	11
Miami-Dade	2015	RUN	1
Miami-Dade	2015	RUN	1
Miami-Dade	2015	RUN	1
Miami-Dade	2015	RUN	47
Miami-Dade	2015	RUN	34
Miami-Dade	2015	RUN	34
Miami-Dade	2015	RUN	17
Miami-Dade	2015	RUN	10
Miami-Dade	2015	RUN	1
Miami-Dade	2015	RUN	5
Miami-Dade	2015	RUN	2
Miami-Dade	2015	RUN	4
Miami-Dade	2015	RUN	4
Miami-Dade	2015	RUN	1
Miami-Dade	2015	RUN	1
Miami-Dade	2015	RUN	2
Miami-Dade	2015	RUN	3
Miami-Dade	2015	RUN	1
Miami-Dade	2015	RUN	1
Miami-Dade	2015	RUN	1
Miami-Dade	2015	RUN	5
Miami-Dade	2015	RUN	1
Miami-Dade	2015	RUN	1
Miami-Dade	2015	RUN	1
Miami-Dade	2015	RUN	4
Miami-Dade	2015	RUN	1
Miami-Dade	2015	RUN	3
Miami-Dade	2015	RUN	32
Miami-Dade	2015	RUN	29
Miami-Dade	2015	RUN	1
Miami-Dade	2015	RUN	1
Miami-Dade	2015	RUN	5
Miami-Dade	2015	RUN	1
Miami-Dade	2015	RUN	1
Miami-Dade	2015	RUN	1
Miami-Dade	2015	RUN	3
Miami-Dade	2015	RUN	3
Miami-Dade	2015	RUN	2
Miami-Dade	2015	RUN	2
Miami-Dade	2015	RUN	2
Miami-Dade	2015	RUN	2
Miami-Dade	2015	RUN	2
Miami-Dade	2015	RUN	1
Miami-Dade	2015	RUN	3
Miami-Dade	2015	RUN	3
Miami-Dade	2015	RUN	3
Miami-Dade	2015	RUN	2

CNTYNM	YEAR	MODE	TACTCNT
Miami-Dade	2015	RUN	2
Miami-Dade	2015	RUN	2
Miami-Dade	2015	RUN	2
Miami-Dade	2015	RUN	2
Miami-Dade	2015	RUN	2
Miami-Dade	2015	RUN	1
Miami-Dade	2015	RUN	4
Miami-Dade	2015	RUN	2
Miami-Dade	2015	RUN	4
Miami-Dade	2015	RUN	2
Miami-Dade	2015	RUN	2
Miami-Dade	2015	RUN	5
Miami-Dade	2015	RUN	2
Miami-Dade	2015	RUN	3
Miami-Dade	2015	RUN	4
Miami-Dade	2015	RUN	2
Miami-Dade	2015	RUN	1
Miami-Dade	2015	RUN	3
Miami-Dade	2015	RUN	1
Miami-Dade	2015	RUN	8
Miami-Dade	2015	RUN	4
Miami-Dade	2015	RUN	2
Miami-Dade	2015	RUN	1
Miami-Dade	2015	RUN	3
Miami-Dade	2015	RUN	4
Miami-Dade	2015	RUN	4
Miami-Dade	2015	RUN	4
Miami-Dade	2015	RUN	8
Miami-Dade	2015	RUN	4
Miami-Dade	2015	RUN	2
Miami-Dade	2015	RUN	3
Miami-Dade	2015	RUN	4
Miami-Dade	2015	RUN	3
Miami-Dade	2015	RUN	3
Miami-Dade	2015	RUN	3
Miami-Dade	2015	RUN	4
Miami-Dade	2015	RUN	2
Miami-Dade	2015	RUN	8
Miami-Dade	2015	RUN	2
Miami-Dade	2015	RUN	1
Miami-Dade	2015	RUN	1
Miami-Dade	2015	RUN	1
Miami-Dade	2015	RUN	4
Miami-Dade	2015	RUN	3
Miami-Dade	2015	RUN	1
Miami-Dade	2015	RUN	1
Miami-Dade	2015	RUN	2
Miami-Dade	2015	RUN	2
Miami-Dade	2015	RUN	1
Miami-Dade	2015	RUN	1
Miami-Dade	2015	RUN	26

CNTYNM	YEAR	MODE	TACTCNT
Miami-Dade	2015	RUN	1
Miami-Dade	2015	RUN	46
Miami-Dade	2015	RUN	33
Miami-Dade	2015	RUN	28
Miami-Dade	2015	RUN	2
Miami-Dade	2015	RUN	1
Miami-Dade	2015	RUN	2
Miami-Dade	2015	RUN	6
Miami-Dade	2015	RUN	14
Miami-Dade	2015	RUN	2
Miami-Dade	2015	RUN	5
Miami-Dade	2015	RUN	27
Miami-Dade	2015	RUN	4
Miami-Dade	2015	RUN	8
Miami-Dade	2015	RUN	4
Miami-Dade	2015	RUN	2
Miami-Dade	2015	RUN	12
Miami-Dade	2015	RUN	13
Miami-Dade	2015	RUN	8
Miami-Dade	2015	RUN	3
Miami-Dade	2015	RUN	1
Miami-Dade	2015	RUN	1
Miami-Dade	2015	RUN	18
Miami-Dade	2015	RUN	10
Miami-Dade	2015	RUN	2
Miami-Dade	2015	RUN	2
Miami-Dade	2015	RUN	2
Miami-Dade	2015	RUN	3
Miami-Dade	2015	RUN	2
Miami-Dade	2015	RUN	2
Miami-Dade	2015	RUN	2
Miami-Dade	2015	RUN	6
Miami-Dade	2015	RUN	4
Miami-Dade	2015	RUN	2
Miami-Dade	2015	RUN	42
Miami-Dade	2015	RUN	43
Miami-Dade	2015	RUN	5
Miami-Dade	2015	RUN	5
Miami-Dade	2015	RUN	8
Miami-Dade	2015	RUN	7
Miami-Dade	2015	RUN	6
Miami-Dade	2015	RUN	6
Miami-Dade	2015	RUN	4
Miami-Dade	2015	RUN	4
Miami-Dade	2015	RUN	5
Miami-Dade	2015	RUN	3
Miami-Dade	2015	RUN	3
Miami-Dade	2015	RUN	1
Miami-Dade	2015	RUN	5
Miami-Dade	2015	RUN	1
Miami-Dade	2015	RUN	21

CNTYNM	YEAR	MODE	TACTCNT
Miami-Dade	2015	RUN	6
Miami-Dade	2015	RUN	2
Miami-Dade	2015	RUN	2
Miami-Dade	2015	RUN	3
Miami-Dade	2015	RUN	6
Miami-Dade	2015	RUN	2
Miami-Dade	2015	RUN	3
Miami-Dade	2015	RUN	3
Miami-Dade	2015	RUN	3
Miami-Dade	2015	RUN	1
Miami-Dade	2015	RUN	2
Miami-Dade	2015	RUN	12
Miami-Dade	2015	RUN	1
Miami-Dade	2015	RUN	2
Miami-Dade	2015	RUN	3
Miami-Dade	2015	RUN	2
Miami-Dade	2015	RUN	36
Miami-Dade	2015	RUN	32
Miami-Dade	2015	RUN	1
Miami-Dade	2015	RUN	9
Miami-Dade	2015	RUN	4
Miami-Dade	2015	RUN	4
Miami-Dade	2015	RUN	2
Miami-Dade	2015	RUN	4
Miami-Dade	2015	RUN	4
Miami-Dade	2015	RUN	13
Miami-Dade	2015	RUN	5
Miami-Dade	2015	RUN	5
Miami-Dade	2015	RUN	4
Miami-Dade	2015	RUN	3
Miami-Dade	2015	RUN	3
Miami-Dade	2015	RUN	1
Miami-Dade	2015	RUN	2
Miami-Dade	2015	RUN	1
Miami-Dade	2015	RUN	1
Miami-Dade	2015	RUN	1
Miami-Dade	2015	RUN	34
Miami-Dade	2015	RUN	49
Miami-Dade	2015	RUN	4
Miami-Dade	2015	RUN	4
Miami-Dade	2015	RUN	13
Miami-Dade	2015	RUN	10
Miami-Dade	2015	RUN	15
Miami-Dade	2015	RUN	2
Miami-Dade	2015	RUN	2
Miami-Dade	2015	RUN	3
Miami-Dade	2015	RUN	3
Miami-Dade	2015	RUN	43
Miami-Dade	2015	RUN	38
Miami-Dade	2015	RUN	4
Miami-Dade	2015	RUN	3

CNTYNM	YEAR	MODE	TACTCNT
Miami-Dade	2015	RUN	3
Miami-Dade	2015	RUN	14
Miami-Dade	2015	RUN	5
Miami-Dade	2015	RUN	3
Miami-Dade	2015	RUN	1
Miami-Dade	2015	RUN	1
Miami-Dade	2015	RUN	4
Miami-Dade	2015	RUN	39
Miami-Dade	2015	RUN	1
Miami-Dade	2015	RUN	1
Miami-Dade	2015	RUN	38
Miami-Dade	2015	RUN	49
Miami-Dade	2015	RUN	43
Miami-Dade	2015	RUN	1
Miami-Dade	2015	RUN	1
Miami-Dade	2015	RUN	67
Miami-Dade	2015	RUN	58
Miami-Dade	2015	RUN	19
Miami-Dade	2015	RUN	52
Miami-Dade	2015	RUN	8
Miami-Dade	2015	RUN	48
Miami-Dade	2015	RUN	59
Miami-Dade	2015	RUN	1
Miami-Dade	2015	RUN	55
Miami-Dade	2015	RUN	53
Miami-Dade	2015	RUN	1
Miami-Dade	2015	RUN	53
Miami-Dade	2015	RUN	46
Miami-Dade	2015	RUN	1
Miami-Dade	2015	RUN	33
Miami-Dade	2015	RUN	1
Miami-Dade	2015	RUN	18
Miami-Dade	2015	RUN	33
Miami-Dade	2015	RUN	38
Miami-Dade	2015	RUN	1
Miami-Dade	2015	RUN	1
Miami-Dade	2015	RUN	1
Miami-Dade	2015	RUN	1
Miami-Dade	2015	RUN	50
Miami-Dade	2015	RUN	41
Miami-Dade	2015	RUN	12
Miami-Dade	2016	RUN	3
Miami-Dade	2016	RUN	16
Miami-Dade	2016	RUN	15
Miami-Dade	2016	RUN	21
Miami-Dade	2016	RUN	16
Miami-Dade	2016	RUN	16
Miami-Dade	2016	RUN	3
Miami-Dade	2016	RUN	2
Miami-Dade	2016	RUN	1
Miami-Dade	2016	RUN	15

CNTYNM	YEAR	MODE	TACTCNT
Miami-Dade	2016	RUN	18
Miami-Dade	2016	RUN	3
Miami-Dade	2016	RUN	1
Miami-Dade	2016	RUN	6
Miami-Dade	2016	RUN	14
Miami-Dade	2016	RUN	14
Miami-Dade	2016	RUN	13
Miami-Dade	2016	RUN	7
Miami-Dade	2016	RUN	7
Miami-Dade	2016	RUN	7
Miami-Dade	2016	RUN	7
Miami-Dade	2016	RUN	7
Miami-Dade	2016	RUN	3
Miami-Dade	2016	RUN	3
Miami-Dade	2016	RUN	2
Miami-Dade	2016	RUN	2
Miami-Dade	2016	RUN	2
Miami-Dade	2016	RUN	1
Miami-Dade	2016	RUN	2
Miami-Dade	2016	RUN	3
Miami-Dade	2016	RUN	15
Miami-Dade	2016	RUN	10
Miami-Dade	2016	RUN	4
Miami-Dade	2016	RUN	2
Miami-Dade	2016	RUN	14
Miami-Dade	2016	RUN	3
Miami-Dade	2016	RUN	3
Miami-Dade	2016	RUN	3
Miami-Dade	2016	RUN	4
Miami-Dade	2016	RUN	5
Miami-Dade	2016	RUN	3
Miami-Dade	2016	RUN	7
Miami-Dade	2016	RUN	1
Miami-Dade	2016	RUN	5
Miami-Dade	2016	RUN	7
Miami-Dade	2016	RUN	2
Miami-Dade	2016	RUN	2
Miami-Dade	2016	RUN	2
Miami-Dade	2016	RUN	2
Miami-Dade	2016	RUN	1
Miami-Dade	2016	RUN	2
Miami-Dade	2016	RUN	1
Miami-Dade	2016	RUN	1
Miami-Dade	2016	RUN	2
Miami-Dade	2016	RUN	2
Miami-Dade	2016	RUN	2
Miami-Dade	2016	RUN	2
Miami-Dade	2016	RUN	2
Miami-Dade	2016	RUN	1
Miami-Dade	2016	RUN	1
Miami-Dade	2016	RUN	1

CNTYNM	YEAR	MODE	TACTCNT
Miami-Dade	2016	RUN	1
Miami-Dade	2016	RUN	1
Miami-Dade	2016	RUN	1
Miami-Dade	2016	RUN	1
Miami-Dade	2016	RUN	1
Miami-Dade	2016	RUN	1
Miami-Dade	2016	RUN	1
Miami-Dade	2016	RUN	1
Miami-Dade	2016	RUN	1
Miami-Dade	2016	RUN	1
Miami-Dade	2016	RUN	1
Miami-Dade	2016	RUN	1
Miami-Dade	2016	RUN	1
Miami-Dade	2016	RUN	1
Miami-Dade	2016	RUN	1
Miami-Dade	2016	RUN	33
Miami-Dade	2016	RUN	38
Miami-Dade	2016	RUN	35
Miami-Dade	2016	RUN	3
Miami-Dade	2016	RUN	1
Miami-Dade	2016	RUN	3
Miami-Dade	2016	RUN	4
Miami-Dade	2016	RUN	5
Miami-Dade	2016	RUN	4
Miami-Dade	2016	RUN	4
Miami-Dade	2016	RUN	4
Miami-Dade	2016	RUN	4
Miami-Dade	2016	RUN	4
Miami-Dade	2016	RUN	4
Miami-Dade	2016	RUN	4
Miami-Dade	2016	RUN	4
Miami-Dade	2016	RUN	3
Miami-Dade	2016	RUN	1
Miami-Dade	2016	RUN	1
Miami-Dade	2016	RUN	1
Miami-Dade	2016	RUN	17
Miami-Dade	2016	RUN	17
Miami-Dade	2016	RUN	2
Miami-Dade	2016	RUN	2
Miami-Dade	2016	RUN	10
Miami-Dade	2016	RUN	27
Miami-Dade	2016	RUN	3
Miami-Dade	2016	RUN	1
Miami-Dade	2016	RUN	1
Miami-Dade	2016	RUN	1
Miami-Dade	2016	RUN	1
Miami-Dade	2016	RUN	1
Miami-Dade	2016	RUN	2
Miami-Dade	2016	RUN	9
Miami-Dade	2016	RUN	11
Miami-Dade	2016	RUN	29
Miami-Dade	2016	RUN	1

CNTYNM	YEAR	MODE	TACTCNT
Miami-Dade	2016	RUN	1
Miami-Dade	2016	RUN	1
Miami-Dade	2016	RUN	15
Miami-Dade	2016	RUN	25
Miami-Dade	2016	RUN	1
Miami-Dade	2016	RUN	15
Miami-Dade	2016	RUN	1
Miami-Dade	2016	RUN	1
Miami-Dade	2016	RUN	19
Miami-Dade	2016	RUN	26
Miami-Dade	2016	RUN	29
Miami-Dade	2016	RUN	1
Miami-Dade	2016	RUN	1
Miami-Dade	2016	RUN	1
Miami-Dade	2016	RUN	19
Miami-Dade	2016	RUN	22
Miami-Dade	2016	RUN	26
Miami-Dade	2016	RUN	1
Miami-Dade	2016	RUN	1
Miami-Dade	2016	RUN	1
Miami-Dade	2016	RUN	22
Miami-Dade	2016	RUN	3
Miami-Dade	2016	RUN	19
Miami-Dade	2016	RUN	18
Miami-Dade	2016	RUN	11
Miami-Dade	2016	RUN	3
Miami-Dade	2016	RUN	6
Miami-Dade	2016	RUN	2
Miami-Dade	2016	RUN	2
Miami-Dade	2016	RUN	1
Miami-Dade	2016	RUN	1
Miami-Dade	2016	RUN	7
Miami-Dade	2016	RUN	9
Miami-Dade	2016	RUN	3
Miami-Dade	2016	RUN	4
Miami-Dade	2016	RUN	1
Miami-Dade	2016	RUN	3
Miami-Dade	2016	RUN	2
Miami-Dade	2016	RUN	2
Miami-Dade	2016	RUN	3
Miami-Dade	2016	RUN	3
Miami-Dade	2016	RUN	1
Miami-Dade	2016	RUN	1
Miami-Dade	2016	RUN	5
Miami-Dade	2016	RUN	9
Miami-Dade	2016	RUN	5
Miami-Dade	2016	RUN	1
Miami-Dade	2016	RUN	2
Miami-Dade	2016	RUN	3
Miami-Dade	2016	RUN	5
Miami-Dade	2016	RUN	2

CNTYNM	YEAR	MODE	TACTCNT
Miami-Dade	2016	RUN	6
Miami-Dade	2016	RUN	1
Miami-Dade	2016	RUN	8
Miami-Dade	2016	RUN	4
Miami-Dade	2016	RUN	4
Miami-Dade	2016	RUN	5
Miami-Dade	2016	RUN	19
Miami-Dade	2016	RUN	1
Miami-Dade	2016	RUN	9
Miami-Dade	2016	RUN	2
Miami-Dade	2016	RUN	5
Miami-Dade	2016	RUN	4
Miami-Dade	2016	RUN	5
Miami-Dade	2016	RUN	5
Miami-Dade	2016	RUN	6
Miami-Dade	2016	RUN	9
Miami-Dade	2016	RUN	7
Miami-Dade	2016	RUN	12
Miami-Dade	2016	RUN	1
Miami-Dade	2016	RUN	2
Miami-Dade	2016	RUN	2
Miami-Dade	2016	RUN	4
Miami-Dade	2016	RUN	5
Miami-Dade	2016	RUN	4
Miami-Dade	2016	RUN	2
Miami-Dade	2016	RUN	2
Miami-Dade	2016	RUN	1
Miami-Dade	2016	RUN	2
Miami-Dade	2016	RUN	3
Miami-Dade	2016	RUN	29
Miami-Dade	2016	RUN	14
Miami-Dade	2016	RUN	4
Miami-Dade	2016	RUN	1
Miami-Dade	2016	RUN	3
Miami-Dade	2016	RUN	1
Miami-Dade	2016	RUN	4
Miami-Dade	2016	RUN	3
Miami-Dade	2016	RUN	1
Miami-Dade	2016	RUN	27
Miami-Dade	2016	RUN	4
Miami-Dade	2016	RUN	8
Miami-Dade	2016	RUN	9
Miami-Dade	2016	RUN	4
Miami-Dade	2016	RUN	5
Miami-Dade	2016	RUN	6
Miami-Dade	2016	RUN	2
Miami-Dade	2016	RUN	3
Miami-Dade	2016	RUN	1
Miami-Dade	2016	RUN	1
Miami-Dade	2016	RUN	1
Miami-Dade	2016	RUN	1

CNTYNM	YEAR	MODE	TACTCNT
Miami-Dade	2016	RUN	28
Miami-Dade	2016	RUN	22
Miami-Dade	2016	RUN	4
Miami-Dade	2016	RUN	1
Miami-Dade	2016	RUN	1
Miami-Dade	2016	RUN	5
Miami-Dade	2016	RUN	12
Miami-Dade	2016	RUN	18
Miami-Dade	2016	RUN	16
Miami-Dade	2016	RUN	1
Miami-Dade	2016	RUN	1
Miami-Dade	2016	RUN	1
Miami-Dade	2016	RUN	2
Miami-Dade	2016	RUN	3
Miami-Dade	2016	RUN	3
Miami-Dade	2016	RUN	1
Miami-Dade	2016	RUN	1
Miami-Dade	2016	RUN	6
Miami-Dade	2016	RUN	7
Miami-Dade	2016	RUN	6
Miami-Dade	2016	RUN	7
Miami-Dade	2016	RUN	2
Miami-Dade	2016	RUN	1
Miami-Dade	2016	RUN	1
Miami-Dade	2016	RUN	4
Miami-Dade	2016	RUN	5
Miami-Dade	2016	RUN	2
Miami-Dade	2016	RUN	1
Miami-Dade	2016	RUN	2
Miami-Dade	2016	RUN	1
Miami-Dade	2016	RUN	1
Miami-Dade	2016	RUN	1
Miami-Dade	2016	RUN	6
Miami-Dade	2016	RUN	5
Miami-Dade	2016	RUN	3
Miami-Dade	2016	RUN	1
Miami-Dade	2016	RUN	3
Miami-Dade	2016	RUN	1
Miami-Dade	2016	RUN	1
Miami-Dade	2016	RUN	6
Miami-Dade	2016	RUN	3
Miami-Dade	2016	RUN	3
Miami-Dade	2016	RUN	1
Miami-Dade	2016	RUN	2
Miami-Dade	2016	RUN	13
Miami-Dade	2016	RUN	8
Miami-Dade	2016	RUN	16
Miami-Dade	2016	RUN	12
Miami-Dade	2016	RUN	2
Miami-Dade	2016	RUN	1
Miami-Dade	2016	RUN	4

CNTYNM	YEAR	MODE	TACTCNT
Miami-Dade	2016	RUN	1
Miami-Dade	2016	RUN	8
Miami-Dade	2016	RUN	2
Miami-Dade	2016	RUN	8
Miami-Dade	2016	RUN	3
Miami-Dade	2016	RUN	4
Miami-Dade	2016	RUN	2
Miami-Dade	2016	RUN	4
Miami-Dade	2016	RUN	1
Miami-Dade	2016	RUN	1
Miami-Dade	2016	RUN	8
Miami-Dade	2016	RUN	2
Miami-Dade	2016	RUN	8
Miami-Dade	2016	RUN	3
Miami-Dade	2016	RUN	1
Miami-Dade	2016	RUN	4
Miami-Dade	2016	RUN	14
Miami-Dade	2016	RUN	8
Miami-Dade	2016	RUN	2
Miami-Dade	2016	RUN	1
Miami-Dade	2016	RUN	3
Miami-Dade	2016	RUN	1
Miami-Dade	2016	RUN	12
Miami-Dade	2016	RUN	4
Miami-Dade	2016	RUN	1
Miami-Dade	2016	RUN	12
Miami-Dade	2016	RUN	9
Miami-Dade	2016	RUN	1
Miami-Dade	2016	RUN	1
Miami-Dade	2016	RUN	9
Miami-Dade	2016	RUN	7
Miami-Dade	2016	RUN	6
Miami-Dade	2016	RUN	13
Miami-Dade	2016	RUN	8
Miami-Dade	2016	RUN	1
Miami-Dade	2016	RUN	3
Miami-Dade	2016	RUN	14
Miami-Dade	2016	RUN	1
Miami-Dade	2016	RUN	7
Miami-Dade	2016	RUN	5
Miami-Dade	2016	RUN	14
Miami-Dade	2016	RUN	10
Miami-Dade	2016	RUN	5
Miami-Dade	2016	RUN	7
Miami-Dade	2016	RUN	2
Miami-Dade	2016	RUN	7
Miami-Dade	2016	RUN	3
Miami-Dade	2016	RUN	11
Miami-Dade	2016	RUN	8
Miami-Dade	2016	RUN	2
Miami-Dade	2016	RUN	2

CNTYNM	YEAR	MODE	TACTCNT
Miami-Dade	2016	RUN	5
Miami-Dade	2016	RUN	8
Miami-Dade	2016	RUN	1
Miami-Dade	2016	RUN	7
Miami-Dade	2016	RUN	3
Miami-Dade	2016	RUN	1
Miami-Dade	2016	RUN	8
Miami-Dade	2016	RUN	1
Miami-Dade	2016	RUN	1
Miami-Dade	2016	RUN	1
Miami-Dade	2016	RUN	2
Miami-Dade	2016	RUN	10
Miami-Dade	2016	RUN	10
Miami-Dade	2016	RUN	1
Miami-Dade	2016	RUN	7
Miami-Dade	2016	RUN	1
Miami-Dade	2016	RUN	15
Miami-Dade	2016	RUN	13
Miami-Dade	2016	RUN	13
Miami-Dade	2016	RUN	2
Miami-Dade	2016	RUN	6
Miami-Dade	2016	RUN	6
Miami-Dade	2016	RUN	6
Miami-Dade	2016	RUN	5
Miami-Dade	2016	RUN	22
Miami-Dade	2016	RUN	22
Miami-Dade	2016	RUN	21
Miami-Dade	2016	RUN	1
Miami-Dade	2016	RUN	5
Miami-Dade	2016	RUN	5
Miami-Dade	2016	RUN	21
Miami-Dade	2016	RUN	2
Miami-Dade	2016	RUN	24
Miami-Dade	2016	RUN	1
Miami-Dade	2016	RUN	1
Miami-Dade	2016	RUN	2
Miami-Dade	2016	RUN	9
Miami-Dade	2016	RUN	1
Miami-Dade	2016	RUN	2
Miami-Dade	2016	RUN	25
Miami-Dade	2016	RUN	3
Miami-Dade	2016	RUN	2
Miami-Dade	2016	RUN	10
Miami-Dade	2016	RUN	25
Miami-Dade	2016	RUN	3
Miami-Dade	2016	RUN	20
Miami-Dade	2016	RUN	2
Miami-Dade	2016	RUN	9
Miami-Dade	2016	RUN	32
Miami-Dade	2016	RUN	27
Miami-Dade	2016	RUN	1

CNTYNM	YEAR	MODE	TACTCNT
Miami-Dade	2016	RUN	12
Miami-Dade	2016	RUN	2
Miami-Dade	2016	RUN	3
Miami-Dade	2016	RUN	2
Miami-Dade	2016	RUN	9
Miami-Dade	2016	RUN	11
Miami-Dade	2016	RUN	14
Miami-Dade	2016	RUN	1
Miami-Dade	2016	RUN	1
Miami-Dade	2016	RUN	2
Miami-Dade	2016	RUN	15
Miami-Dade	2016	RUN	77
Miami-Dade	2016	RUN	11
Miami-Dade	2016	RUN	1
Miami-Dade	2016	RUN	13
Miami-Dade	2016	RUN	1
Miami-Dade	2016	RUN	1
Miami-Dade	2016	RUN	10
Miami-Dade	2016	RUN	2
Miami-Dade	2016	RUN	12
Miami-Dade	2016	RUN	2
Miami-Dade	2016	RUN	2
Miami-Dade	2016	RUN	10
Miami-Dade	2016	RUN	37
Miami-Dade	2016	RUN	66
Miami-Dade	2016	RUN	68
Miami-Dade	2016	RUN	58
Miami-Dade	2016	RUN	24
Miami-Dade	2016	RUN	20
Miami-Dade	2016	RUN	6
Miami-Dade	2016	RUN	10
Miami-Dade	2016	RUN	3
Miami-Dade	2016	RUN	7
Miami-Dade	2016	RUN	8
Miami-Dade	2016	RUN	5
Miami-Dade	2016	RUN	6
Miami-Dade	2016	RUN	8
Miami-Dade	2016	RUN	6
Miami-Dade	2016	RUN	3
Miami-Dade	2016	RUN	4
Miami-Dade	2016	RUN	8
Miami-Dade	2016	RUN	14
Miami-Dade	2016	RUN	3
Miami-Dade	2016	RUN	8
Miami-Dade	2016	RUN	7
Miami-Dade	2016	RUN	12
Miami-Dade	2016	RUN	11
Miami-Dade	2016	RUN	11
Miami-Dade	2016	RUN	11
Miami-Dade	2016	RUN	12
Miami-Dade	2016	RUN	10

CNTYNM	YEAR	MODE	TACTCNT
Miami-Dade	2016	RUN	3
Miami-Dade	2016	RUN	3
Miami-Dade	2016	RUN	7
Miami-Dade	2016	RUN	11
Miami-Dade	2016	RUN	7
Miami-Dade	2016	RUN	9
Miami-Dade	2016	RUN	1
Miami-Dade	2016	RUN	5
Miami-Dade	2016	RUN	1
Miami-Dade	2016	RUN	10
Miami-Dade	2016	RUN	7
Miami-Dade	2016	RUN	1
Miami-Dade	2016	RUN	1
Miami-Dade	2016	RUN	9
Miami-Dade	2016	RUN	1
Miami-Dade	2016	RUN	4
Miami-Dade	2016	RUN	6
Miami-Dade	2016	RUN	7
Miami-Dade	2016	RUN	1
Miami-Dade	2016	RUN	2
Miami-Dade	2016	RUN	6
Miami-Dade	2016	RUN	8
Miami-Dade	2016	RUN	6
Miami-Dade	2016	RUN	6
Miami-Dade	2016	RUN	9
Miami-Dade	2016	RUN	7
Miami-Dade	2016	RUN	10
Miami-Dade	2016	RUN	7
Miami-Dade	2016	RUN	9
Miami-Dade	2016	RUN	25
Miami-Dade	2016	RUN	26
Miami-Dade	2016	RUN	24
Miami-Dade	2016	RUN	18
Miami-Dade	2016	RUN	25
Miami-Dade	2016	RUN	29
Miami-Dade	2016	RUN	28
Miami-Dade	2016	RUN	37
Miami-Dade	2016	RUN	37
Miami-Dade	2016	RUN	4
Miami-Dade	2016	RUN	1
Miami-Dade	2016	RUN	2
Miami-Dade	2016	RUN	1
Miami-Dade	2016	RUN	2
Miami-Dade	2016	RUN	1
Miami-Dade	2016	RUN	4
Miami-Dade	2016	RUN	6
Miami-Dade	2016	RUN	17
Miami-Dade	2016	RUN	2
Miami-Dade	2016	RUN	9
Miami-Dade	2016	RUN	1
Miami-Dade	2016	RUN	2

CNTYNM	YEAR	MODE	TACTCNT
Miami-Dade	2016	RUN	4
Miami-Dade	2016	RUN	2
Miami-Dade	2016	RUN	5
Miami-Dade	2016	RUN	21
Miami-Dade	2016	RUN	8
Miami-Dade	2016	RUN	19
Miami-Dade	2016	RUN	2
Miami-Dade	2016	RUN	1
Miami-Dade	2016	RUN	28
Miami-Dade	2016	RUN	4
Miami-Dade	2016	RUN	31
Miami-Dade	2016	RUN	31
Miami-Dade	2016	RUN	15
Miami-Dade	2016	RUN	2
Miami-Dade	2016	RUN	14
Miami-Dade	2016	RUN	12
Miami-Dade	2016	RUN	7
Miami-Dade	2016	RUN	13
Miami-Dade	2016	RUN	15
Miami-Dade	2016	RUN	18
Miami-Dade	2016	RUN	8
Miami-Dade	2016	RUN	1
Miami-Dade	2016	RUN	8
Miami-Dade	2016	RUN	13
Miami-Dade	2016	RUN	1
Miami-Dade	2016	RUN	1
Miami-Dade	2016	RUN	1
Miami-Dade	2016	RUN	1
Miami-Dade	2016	RUN	8
Miami-Dade	2016	RUN	1
Miami-Dade	2016	RUN	1
Miami-Dade	2016	RUN	12
Miami-Dade	2016	RUN	9
Miami-Dade	2016	RUN	6
Miami-Dade	2016	RUN	23
Miami-Dade	2016	RUN	7
Miami-Dade	2016	RUN	12
Miami-Dade	2016	RUN	1
Miami-Dade	2016	RUN	13
Miami-Dade	2016	RUN	13
Miami-Dade	2016	RUN	13
Miami-Dade	2016	RUN	4
Miami-Dade	2016	RUN	1
Miami-Dade	2016	RUN	4
Miami-Dade	2016	RUN	6
Miami-Dade	2016	RUN	7
Miami-Dade	2016	RUN	1
Miami-Dade	2016	RUN	29
Miami-Dade	2016	RUN	26
Miami-Dade	2016	RUN	2
Miami-Dade	2016	RUN	1

CNTYNM	YEAR	MODE	TACTCNT
Miami-Dade	2016	RUN	37
Miami-Dade	2016	RUN	3
Miami-Dade	2016	RUN	3
Miami-Dade	2016	RUN	5
Miami-Dade	2016	RUN	1
Miami-Dade	2016	RUN	1
Miami-Dade	2016	RUN	23
Miami-Dade	2016	RUN	2
Miami-Dade	2016	RUN	2
Miami-Dade	2016	RUN	4
Miami-Dade	2016	RUN	4
Miami-Dade	2016	RUN	4
Miami-Dade	2016	RUN	4
Miami-Dade	2016	RUN	5
Miami-Dade	2016	RUN	1
Miami-Dade	2016	RUN	4
Miami-Dade	2016	RUN	5
Miami-Dade	2016	RUN	25
Miami-Dade	2016	RUN	1
Miami-Dade	2016	RUN	2
Miami-Dade	2016	RUN	24
Miami-Dade	2016	RUN	1
Miami-Dade	2016	RUN	3
Miami-Dade	2016	RUN	2
Miami-Dade	2016	RUN	23
Miami-Dade	2016	RUN	1
Miami-Dade	2016	RUN	1
Miami-Dade	2016	RUN	5
Miami-Dade	2016	RUN	3
Miami-Dade	2016	RUN	4
Miami-Dade	2016	RUN	2
Miami-Dade	2016	RUN	4
Miami-Dade	2016	RUN	1
Miami-Dade	2016	RUN	3
Miami-Dade	2016	RUN	1
Miami-Dade	2016	RUN	1
Miami-Dade	2016	RUN	54
Miami-Dade	2016	RUN	1
Miami-Dade	2016	RUN	19
Miami-Dade	2016	RUN	1
Miami-Dade	2016	RUN	19
Miami-Dade	2016	RUN	2
Miami-Dade	2016	RUN	24
Miami-Dade	2016	RUN	1
Miami-Dade	2016	RUN	23
Miami-Dade	2016	RUN	1
Miami-Dade	2016	RUN	2
Miami-Dade	2016	RUN	25
Miami-Dade	2016	RUN	25
Miami-Dade	2016	RUN	3
Miami-Dade	2016	RUN	25

CNTYNM	YEAR	MODE	TACTCNT
Miami-Dade	2016	RUN	3
Miami-Dade	2016	RUN	13
Miami-Dade	2016	RUN	4
Miami-Dade	2016	RUN	12
Miami-Dade	2016	RUN	13
Miami-Dade	2016	RUN	14
Miami-Dade	2016	RUN	14
Miami-Dade	2016	RUN	14
Miami-Dade	2016	RUN	12
Miami-Dade	2016	RUN	1
Miami-Dade	2016	RUN	10
Miami-Dade	2016	RUN	12
Miami-Dade	2016	RUN	3
Miami-Dade	2016	RUN	43
Miami-Dade	2016	RUN	1
Miami-Dade	2016	RUN	1
Miami-Dade	2016	RUN	6
Miami-Dade	2016	RUN	7
Miami-Dade	2016	RUN	6
Miami-Dade	2016	RUN	12
Miami-Dade	2016	RUN	4
Miami-Dade	2016	RUN	11
Miami-Dade	2016	RUN	5
Miami-Dade	2016	RUN	8
Miami-Dade	2016	RUN	8
Miami-Dade	2016	RUN	1
Miami-Dade	2016	RUN	10
Miami-Dade	2016	RUN	2
Miami-Dade	2016	RUN	7
Miami-Dade	2016	RUN	18
Miami-Dade	2016	RUN	18
Miami-Dade	2016	RUN	7
Miami-Dade	2016	RUN	4
Miami-Dade	2016	RUN	1
Miami-Dade	2016	RUN	8
Miami-Dade	2016	RUN	1
Miami-Dade	2016	RUN	3
Miami-Dade	2016	RUN	1
Miami-Dade	2016	RUN	1
Miami-Dade	2016	RUN	3
Miami-Dade	2016	RUN	3
Miami-Dade	2016	RUN	32
Miami-Dade	2016	RUN	5
Miami-Dade	2016	RUN	1
Miami-Dade	2016	RUN	3
Miami-Dade	2016	RUN	1
Miami-Dade	2016	RUN	1
Miami-Dade	2016	RUN	19
Miami-Dade	2016	RUN	5
Miami-Dade	2016	RUN	2
Miami-Dade	2016	RUN	1

CNTYNM	YEAR	MODE	TACTCNT
Miami-Dade	2016	RUN	31
Miami-Dade	2016	RUN	25
Miami-Dade	2016	RUN	30
Miami-Dade	2016	RUN	7
Miami-Dade	2016	RUN	1
Miami-Dade	2016	RUN	24
Miami-Dade	2016	RUN	2
Miami-Dade	2016	RUN	31
Miami-Dade	2016	RUN	27
Miami-Dade	2016	RUN	23
Miami-Dade	2016	RUN	53
Miami-Dade	2016	RUN	61
Miami-Dade	2016	RUN	9
Miami-Dade	2016	RUN	22
Miami-Dade	2016	RUN	1
Miami-Dade	2016	RUN	53
Miami-Dade	2016	RUN	1
Miami-Dade	2016	RUN	53
Miami-Dade	2016	RUN	19
Miami-Dade	2016	RUN	62
Miami-Dade	2016	RUN	50
Miami-Dade	2016	RUN	25
Miami-Dade	2016	RUN	31
Miami-Dade	2016	RUN	33
Miami-Dade	2016	RUN	31
Miami-Dade	2016	RUN	31
Miami-Dade	2016	RUN	1
Miami-Dade	2016	RUN	26
Miami-Dade	2016	RUN	28
Miami-Dade	2016	RUN	37
Miami-Dade	2016	RUN	3
Miami-Dade	2016	RUN	37
Miami-Dade	2016	RUN	6
Miami-Dade	2016	RUN	5
Miami-Dade	2016	RUN	5
Miami-Dade	2016	RUN	5
Miami-Dade	2016	RUN	2
Miami-Dade	2016	RUN	7
Miami-Dade	2016	RUN	6
Miami-Dade	2016	RUN	6
Miami-Dade	2016	RUN	5
Miami-Dade	2016	RUN	1
Miami-Dade	2016	RUN	7
Miami-Dade	2016	RUN	149
Miami-Dade	2016	RUN	14
Miami-Dade	2016	RUN	6
Miami-Dade	2016	RUN	4
Miami-Dade	2016	RUN	22
Miami-Dade	2016	RUN	61
Miami-Dade	2016	RUN	10
Miami-Dade	2016	RUN	4

CNTYNM	YEAR	MODE	TACTCNT
Miami-Dade	2016	RUN	7
Miami-Dade	2016	RUN	16
Miami-Dade	2016	RUN	16
Miami-Dade	2016	RUN	4
Miami-Dade	2016	RUN	8
Miami-Dade	2016	RUN	8
Miami-Dade	2016	RUN	4
Miami-Dade	2016	RUN	11
Miami-Dade	2016	RUN	3
Miami-Dade	2016	RUN	1
Miami-Dade	2016	RUN	1
Miami-Dade	2016	RUN	4
Miami-Dade	2016	RUN	1
Miami-Dade	2016	RUN	1
Miami-Dade	2016	RUN	1
Miami-Dade	2016	RUN	1
Miami-Dade	2016	RUN	1
Miami-Dade	2016	RUN	1
Miami-Dade	2016	RUN	1
Miami-Dade	2016	RUN	5
Miami-Dade	2016	RUN	5
Miami-Dade	2016	RUN	14
Miami-Dade	2016	RUN	5
Miami-Dade	2016	RUN	1
Miami-Dade	2016	RUN	4
Miami-Dade	2016	RUN	2
Miami-Dade	2016	RUN	1
Miami-Dade	2016	RUN	1
Miami-Dade	2016	RUN	4
Miami-Dade	2016	RUN	13
Miami-Dade	2016	RUN	8
Miami-Dade	2016	RUN	30
Miami-Dade	2016	RUN	2
Miami-Dade	2016	RUN	4
Miami-Dade	2016	RUN	2
Miami-Dade	2016	RUN	4
Miami-Dade	2016	RUN	10
Miami-Dade	2016	RUN	12
Miami-Dade	2016	RUN	11
Miami-Dade	2016	RUN	12
Miami-Dade	2016	RUN	1
Miami-Dade	2016	RUN	11
Miami-Dade	2016	RUN	4
Miami-Dade	2016	RUN	11
Miami-Dade	2016	RUN	1
Miami-Dade	2016	RUN	2
Miami-Dade	2016	RUN	13
Miami-Dade	2016	RUN	14
Miami-Dade	2016	RUN	16
Miami-Dade	2016	RUN	1
Miami-Dade	2016	RUN	16

CNTYNM	YEAR	MODE	TACTCNT
Miami-Dade	2016	RUN	5
Miami-Dade	2016	RUN	4
Miami-Dade	2016	RUN	10
Miami-Dade	2016	RUN	10
Miami-Dade	2016	RUN	10
Miami-Dade	2016	RUN	1
Miami-Dade	2016	RUN	10
Miami-Dade	2016	RUN	6
Miami-Dade	2016	RUN	10
Miami-Dade	2016	RUN	6
Miami-Dade	2016	RUN	6
Miami-Dade	2016	RUN	8
Miami-Dade	2016	RUN	18
Miami-Dade	2016	RUN	18
Miami-Dade	2016	RUN	13
Miami-Dade	2016	RUN	15
Miami-Dade	2016	RUN	2
Miami-Dade	2016	RUN	1
Miami-Dade	2016	RUN	17
Miami-Dade	2016	RUN	9
Miami-Dade	2016	RUN	2
Miami-Dade	2016	RUN	10
Miami-Dade	2016	RUN	1
Miami-Dade	2016	RUN	14
Miami-Dade	2016	RUN	15
Miami-Dade	2016	RUN	20
Miami-Dade	2016	RUN	23
Miami-Dade	2016	RUN	30
Miami-Dade	2016	RUN	28
Miami-Dade	2016	RUN	27
Miami-Dade	2016	RUN	34
Miami-Dade	2016	RUN	1
Miami-Dade	2016	RUN	10
Miami-Dade	2016	RUN	28
Miami-Dade	2016	RUN	29
Miami-Dade	2016	RUN	1
Miami-Dade	2016	RUN	2
Miami-Dade	2016	RUN	4
Miami-Dade	2016	RUN	16
Miami-Dade	2016	RUN	26
Miami-Dade	2016	RUN	23
Miami-Dade	2016	RUN	21
Miami-Dade	2016	RUN	25
Miami-Dade	2016	RUN	2
Miami-Dade	2016	RUN	44
Miami-Dade	2016	RUN	6
Miami-Dade	2016	RUN	41
Miami-Dade	2016	RUN	10
Miami-Dade	2016	RUN	1
Miami-Dade	2016	RUN	31
Miami-Dade	2016	RUN	1

CNTYNM	YEAR	MODE	TACTCNT
Miami-Dade	2016	RUN	1
Miami-Dade	2016	RUN	2
Miami-Dade	2016	RUN	2
Miami-Dade	2016	RUN	2
Miami-Dade	2016	RUN	9
Miami-Dade	2016	RUN	1
Miami-Dade	2016	RUN	8
Miami-Dade	2016	RUN	9
Miami-Dade	2016	RUN	27
Miami-Dade	2016	RUN	6
Miami-Dade	2016	RUN	3
Miami-Dade	2016	RUN	24
Miami-Dade	2016	RUN	12
Miami-Dade	2016	RUN	12
Miami-Dade	2016	RUN	2
Miami-Dade	2016	RUN	1
Miami-Dade	2016	RUN	1
Miami-Dade	2016	RUN	1
Miami-Dade	2016	RUN	5
Miami-Dade	2016	RUN	6
Miami-Dade	2016	RUN	21
Miami-Dade	2016	RUN	17
Miami-Dade	2016	RUN	25
Miami-Dade	2016	RUN	2
Miami-Dade	2016	RUN	3
Miami-Dade	2016	RUN	14
Miami-Dade	2016	RUN	9
Miami-Dade	2016	RUN	2
Miami-Dade	2016	RUN	54
Miami-Dade	2016	RUN	2
Miami-Dade	2016	RUN	2
Miami-Dade	2016	RUN	11
Miami-Dade	2016	RUN	8
Miami-Dade	2016	RUN	11
Miami-Dade	2016	RUN	11
Miami-Dade	2016	RUN	15
Miami-Dade	2016	RUN	4
Miami-Dade	2016	RUN	4
Miami-Dade	2016	RUN	4
Miami-Dade	2016	RUN	2
Miami-Dade	2016	RUN	2
Miami-Dade	2016	RUN	5
Miami-Dade	2016	RUN	1
Miami-Dade	2016	RUN	1
Miami-Dade	2016	RUN	2
Miami-Dade	2016	RUN	2
Miami-Dade	2016	RUN	1
Miami-Dade	2016	RUN	1
Miami-Dade	2016	RUN	4
Miami-Dade	2016	RUN	5
Miami-Dade	2016	RUN	3

CNTYNM	YEAR	MODE	TACTCNT
Miami-Dade	2016	RUN	1
Miami-Dade	2016	RUN	1
Miami-Dade	2016	RUN	1
Miami-Dade	2016	RUN	1
Miami-Dade	2016	RUN	1
Miami-Dade	2016	RUN	6
Miami-Dade	2016	RUN	16
Miami-Dade	2016	RUN	23
Miami-Dade	2016	RUN	34
Miami-Dade	2016	RUN	29
Miami-Dade	2016	RUN	5
Miami-Dade	2016	RUN	6
Miami-Dade	2016	RUN	5
Miami-Dade	2016	RUN	39
Miami-Dade	2016	RUN	46
Miami-Dade	2016	RUN	3
Miami-Dade	2016	RUN	2
Miami-Dade	2016	RUN	8
Miami-Dade	2016	RUN	1
Miami-Dade	2016	RUN	9
Miami-Dade	2016	RUN	50
Miami-Dade	2016	RUN	22
Miami-Dade	2016	RUN	18
Miami-Dade	2016	RUN	67
Miami-Dade	2016	RUN	16
Miami-Dade	2016	RUN	16
Miami-Dade	2016	RUN	23
Miami-Dade	2016	RUN	48
Miami-Dade	2016	RUN	1
Miami-Dade	2016	RUN	1
Miami-Dade	2016	RUN	1
Miami-Dade	2016	RUN	17
Miami-Dade	2016	RUN	53
Miami-Dade	2016	RUN	62
Miami-Dade	2016	RUN	51
Miami-Dade	2016	RUN	33
Miami-Dade	2016	RUN	7
Miami-Dade	2016	RUN	10
Miami-Dade	2016	RUN	2
Miami-Dade	2016	RUN	2
Miami-Dade	2016	RUN	2
Miami-Dade	2016	RUN	10
Miami-Dade	2016	RUN	3
Miami-Dade	2016	RUN	7
Miami-Dade	2016	RUN	10
Miami-Dade	2016	RUN	11
Miami-Dade	2016	RUN	1
Miami-Dade	2016	RUN	2
Miami-Dade	2016	RUN	11
Miami-Dade	2016	RUN	15
Miami-Dade	2016	RUN	16

CNTYNM	YEAR	MODE	TACTCNT
Miami-Dade	2016	RUN	10
Miami-Dade	2016	RUN	7
Miami-Dade	2016	RUN	5
Miami-Dade	2016	RUN	8
Miami-Dade	2016	RUN	10
Miami-Dade	2016	RUN	13
Miami-Dade	2016	RUN	33
Miami-Dade	2016	RUN	35
Miami-Dade	2016	RUN	35
Miami-Dade	2016	RUN	3
Miami-Dade	2016	RUN	8
Miami-Dade	2016	RUN	19
Miami-Dade	2016	RUN	19
Miami-Dade	2016	RUN	17
Miami-Dade	2016	RUN	22
Miami-Dade	2016	RUN	20
Miami-Dade	2016	RUN	10
Miami-Dade	2016	RUN	12
Miami-Dade	2016	RUN	12
Miami-Dade	2016	RUN	17
Miami-Dade	2016	RUN	12
Miami-Dade	2016	RUN	14
Miami-Dade	2016	RUN	7
Miami-Dade	2016	RUN	5
Miami-Dade	2016	RUN	46
Miami-Dade	2016	RUN	34
Miami-Dade	2016	RUN	25
Miami-Dade	2016	RUN	22
Miami-Dade	2016	RUN	32
Miami-Dade	2016	RUN	44
Miami-Dade	2016	RUN	9
Miami-Dade	2016	RUN	10
Miami-Dade	2016	RUN	52
Miami-Dade	2016	RUN	75
Miami-Dade	2016	RUN	4
Miami-Dade	2016	RUN	2
Miami-Dade	2016	RUN	2
Miami-Dade	2016	RUN	11
Miami-Dade	2016	RUN	53
Miami-Dade	2016	RUN	49
Miami-Dade	2016	RUN	8
Miami-Dade	2016	RUN	8
Miami-Dade	2016	RUN	11
Miami-Dade	2016	RUN	28
Miami-Dade	2016	RUN	51
Miami-Dade	2016	RUN	14
Miami-Dade	2016	RUN	13
Miami-Dade	2016	RUN	13
Miami-Dade	2016	RUN	9
Miami-Dade	2016	RUN	7
Miami-Dade	2016	RUN	4

CNTYNM	YEAR	MODE	TACTCNT
Miami-Dade	2016	RUN	4
Miami-Dade	2016	RUN	9
Miami-Dade	2016	RUN	8
Miami-Dade	2016	RUN	3
Miami-Dade	2016	RUN	7
Miami-Dade	2016	RUN	5
Miami-Dade	2016	RUN	31
Miami-Dade	2016	RUN	29
Miami-Dade	2016	RUN	22
Miami-Dade	2016	RUN	28
Miami-Dade	2016	RUN	3
Miami-Dade	2016	RUN	2
Miami-Dade	2016	RUN	4
Miami-Dade	2016	RUN	1
Miami-Dade	2016	RUN	3
Miami-Dade	2016	RUN	3
Miami-Dade	2016	RUN	1
Miami-Dade	2016	RUN	2
Miami-Dade	2016	RUN	2
Miami-Dade	2016	RUN	4
Miami-Dade	2016	RUN	3
Miami-Dade	2016	RUN	12
Miami-Dade	2016	RUN	31
Miami-Dade	2016	RUN	29
Miami-Dade	2016	RUN	31
Miami-Dade	2016	RUN	2
Miami-Dade	2016	RUN	2
Miami-Dade	2016	RUN	1
Miami-Dade	2016	RUN	2
Miami-Dade	2016	RUN	5
Miami-Dade	2016	RUN	5
Miami-Dade	2016	RUN	8
Miami-Dade	2016	RUN	3
Miami-Dade	2016	RUN	17
Miami-Dade	2016	RUN	16
Miami-Dade	2016	RUN	18
Miami-Dade	2016	RUN	12
Miami-Dade	2016	RUN	2
Miami-Dade	2016	RUN	64
Miami-Dade	2016	RUN	2
Miami-Dade	2016	RUN	1
Miami-Dade	2016	RUN	1
Miami-Dade	2016	RUN	2
Miami-Dade	2016	RUN	8
Miami-Dade	2016	RUN	13
Miami-Dade	2016	RUN	3
Miami-Dade	2016	RUN	1
Miami-Dade	2016	RUN	3
Miami-Dade	2016	RUN	3
Miami-Dade	2016	RUN	8
Miami-Dade	2016	RUN	9

CNTYNM	YEAR	MODE	TACTCNT
Miami-Dade	2016	RUN	15
Miami-Dade	2016	RUN	14
Miami-Dade	2016	RUN	6
Miami-Dade	2016	RUN	19
Miami-Dade	2016	RUN	6
Miami-Dade	2016	RUN	15
Miami-Dade	2016	RUN	5
Miami-Dade	2016	RUN	18
Miami-Dade	2016	RUN	5
Miami-Dade	2016	RUN	16
Miami-Dade	2016	RUN	11
Miami-Dade	2016	RUN	6
Miami-Dade	2016	RUN	14
Miami-Dade	2016	RUN	5
Miami-Dade	2016	RUN	11
Miami-Dade	2016	RUN	13
Miami-Dade	2016	RUN	12
Miami-Dade	2016	RUN	2
Miami-Dade	2016	RUN	12
Miami-Dade	2016	RUN	17
Miami-Dade	2016	RUN	12
Miami-Dade	2016	RUN	5
Miami-Dade	2016	RUN	20
Miami-Dade	2016	RUN	4
Miami-Dade	2016	RUN	2
Miami-Dade	2016	RUN	16
Miami-Dade	2016	RUN	11
Miami-Dade	2016	RUN	2
Miami-Dade	2016	RUN	3
Miami-Dade	2016	RUN	14
Miami-Dade	2016	RUN	6
Miami-Dade	2016	RUN	4
Miami-Dade	2016	RUN	1
Miami-Dade	2016	RUN	4
Miami-Dade	2016	RUN	1
Miami-Dade	2016	RUN	1
Miami-Dade	2016	RUN	3
Miami-Dade	2016	RUN	2
Miami-Dade	2016	RUN	3
Miami-Dade	2016	RUN	2
Miami-Dade	2016	RUN	1
Miami-Dade	2016	RUN	6
Miami-Dade	2016	RUN	2
Miami-Dade	2016	RUN	2
Miami-Dade	2016	RUN	3
Miami-Dade	2016	RUN	5
Miami-Dade	2016	RUN	16
Miami-Dade	2016	RUN	1
Miami-Dade	2016	RUN	1
Miami-Dade	2016	RUN	9
Miami-Dade	2016	RUN	1

CNTYNM	YEAR	MODE	TACTCNT
Miami-Dade	2016	RUN	9
Miami-Dade	2016	RUN	1
Miami-Dade	2016	RUN	2
Miami-Dade	2016	RUN	2
Miami-Dade	2016	RUN	13
Miami-Dade	2016	RUN	13
Miami-Dade	2016	RUN	14
Miami-Dade	2016	RUN	8
Miami-Dade	2016	RUN	4
Miami-Dade	2016	RUN	6
Miami-Dade	2016	RUN	2
Miami-Dade	2016	RUN	3
Miami-Dade	2016	RUN	9
Miami-Dade	2016	RUN	11
Miami-Dade	2016	RUN	1
Miami-Dade	2016	RUN	1
Miami-Dade	2016	RUN	1
Miami-Dade	2016	RUN	1
Miami-Dade	2016	RUN	1
Miami-Dade	2016	RUN	1
Miami-Dade	2016	RUN	1
Miami-Dade	2016	RUN	1
Miami-Dade	2016	RUN	1
Miami-Dade	2016	RUN	1
Miami-Dade	2016	RUN	1
Miami-Dade	2016	RUN	1
Miami-Dade	2016	RUN	4
Miami-Dade	2016	RUN	2
Miami-Dade	2016	RUN	3
Miami-Dade	2016	RUN	2
Miami-Dade	2016	RUN	4
Miami-Dade	2016	RUN	16
Miami-Dade	2016	RUN	55
Miami-Dade	2016	RUN	35
Miami-Dade	2016	RUN	1
Miami-Dade	2016	RUN	12
Miami-Dade	2016	RUN	13
Miami-Dade	2016	RUN	14
Miami-Dade	2016	RUN	28
Miami-Dade	2016	RUN	32
Miami-Dade	2016	RUN	1
Miami-Dade	2016	RUN	2
Miami-Dade	2016	RUN	4
Miami-Dade	2016	RUN	15
Miami-Dade	2016	RUN	10
Miami-Dade	2016	RUN	4
Miami-Dade	2016	RUN	4
Miami-Dade	2016	RUN	4
Miami-Dade	2016	RUN	4
Miami-Dade	2016	RUN	4

CNTYNM	YEAR	MODE	TACTCNT
Miami-Dade	2016	RUN	3
Miami-Dade	2016	RUN	7
Miami-Dade	2016	RUN	10
Miami-Dade	2016	RUN	7
Miami-Dade	2016	RUN	1
Miami-Dade	2016	RUN	7
Miami-Dade	2016	RUN	5
Miami-Dade	2016	RUN	10
Miami-Dade	2016	RUN	10
Miami-Dade	2016	RUN	16
Miami-Dade	2016	RUN	16
Miami-Dade	2016	RUN	26
Miami-Dade	2016	RUN	26
Miami-Dade	2016	RUN	19
Miami-Dade	2016	RUN	22
Miami-Dade	2016	RUN	19
Miami-Dade	2016	RUN	15
Miami-Dade	2016	RUN	10
Miami-Dade	2016	RUN	2
Miami-Dade	2016	RUN	11
Miami-Dade	2016	RUN	41
Miami-Dade	2016	RUN	16
Miami-Dade	2016	RUN	62
Miami-Dade	2016	RUN	2
Miami-Dade	2016	RUN	4
Miami-Dade	2016	RUN	61
Miami-Dade	2016	RUN	65
Miami-Dade	2016	RUN	1
Miami-Dade	2016	RUN	9
Miami-Dade	2016	RUN	16
Miami-Dade	2016	RUN	21
Miami-Dade	2016	RUN	15
Miami-Dade	2016	RUN	26
Miami-Dade	2016	RUN	8
Miami-Dade	2016	RUN	22
Miami-Dade	2016	RUN	10
Miami-Dade	2016	RUN	11
Miami-Dade	2016	RUN	1
Miami-Dade	2016	RUN	3
Miami-Dade	2016	RUN	3
Miami-Dade	2016	RUN	3
Miami-Dade	2016	RUN	7
Miami-Dade	2016	RUN	5
Miami-Dade	2016	RUN	1
Miami-Dade	2016	RUN	16
Miami-Dade	2016	RUN	1
Miami-Dade	2016	RUN	1
Miami-Dade	2016	RUN	5
Miami-Dade	2016	RUN	2
Miami-Dade	2016	RUN	14
Miami-Dade	2016	RUN	6

CNTYNM	YEAR	MODE	TACTCNT
Miami-Dade	2016	RUN	4
Miami-Dade	2016	RUN	1
Miami-Dade	2016	RUN	4
Miami-Dade	2016	RUN	2
Miami-Dade	2016	RUN	2
Miami-Dade	2016	RUN	1
Miami-Dade	2016	RUN	1
Miami-Dade	2016	RUN	5
Miami-Dade	2016	RUN	1
Miami-Dade	2016	RUN	14
Miami-Dade	2016	RUN	1
Miami-Dade	2016	RUN	3
Miami-Dade	2016	RUN	1
Miami-Dade	2016	RUN	1
Miami-Dade	2016	RUN	1
Miami-Dade	2016	RUN	2
Miami-Dade	2016	RUN	4
Miami-Dade	2016	RUN	1
Miami-Dade	2016	RUN	4
Miami-Dade	2016	RUN	1
Miami-Dade	2016	RUN	3
Miami-Dade	2016	RUN	20
Miami-Dade	2016	RUN	3
Miami-Dade	2016	RUN	7
Miami-Dade	2016	RUN	4
Miami-Dade	2016	RUN	2
Miami-Dade	2016	RUN	2
Miami-Dade	2016	RUN	13
Miami-Dade	2016	RUN	20
Miami-Dade	2016	RUN	16
Miami-Dade	2016	RUN	57
Miami-Dade	2016	RUN	59
Miami-Dade	2016	RUN	21
Miami-Dade	2016	RUN	21
Miami-Dade	2016	RUN	35
Miami-Dade	2016	RUN	36
Miami-Dade	2016	RUN	25
Miami-Dade	2016	RUN	23
Miami-Dade	2016	RUN	21
Miami-Dade	2016	RUN	27
Miami-Dade	2016	RUN	10
Miami-Dade	2016	RUN	12
Miami-Dade	2016	RUN	102
Miami-Dade	2016	RUN	103
Miami-Dade	2016	RUN	5
Miami-Dade	2016	RUN	3
Miami-Dade	2016	RUN	9
Miami-Dade	2016	RUN	9
Miami-Dade	2016	RUN	2
Miami-Dade	2016	RUN	2
Miami-Dade	2016	RUN	2

CNTYNM	YEAR	MODE	TACTCNT
Miami-Dade	2016	RUN	3
Miami-Dade	2016	RUN	14
Miami-Dade	2016	RUN	13
Miami-Dade	2016	RUN	21
Miami-Dade	2016	RUN	19
Miami-Dade	2016	RUN	1
Miami-Dade	2016	RUN	1
Miami-Dade	2016	RUN	15
Miami-Dade	2016	RUN	15
Miami-Dade	2016	RUN	10
Miami-Dade	2016	RUN	7
Miami-Dade	2016	RUN	1
Miami-Dade	2016	RUN	1
Miami-Dade	2016	RUN	1
Miami-Dade	2016	RUN	4
Miami-Dade	2016	RUN	2
Miami-Dade	2016	RUN	1
Miami-Dade	2016	RUN	1
Miami-Dade	2016	RUN	5
Miami-Dade	2016	RUN	5
Miami-Dade	2016	RUN	1
Miami-Dade	2016	RUN	1
Miami-Dade	2016	RUN	7
Miami-Dade	2016	RUN	7
Miami-Dade	2016	RUN	47
Miami-Dade	2016	RUN	49
Miami-Dade	2016	RUN	31
Miami-Dade	2016	RUN	21
Miami-Dade	2016	RUN	18
Miami-Dade	2016	RUN	26
Miami-Dade	2016	RUN	21
Miami-Dade	2016	RUN	19
Miami-Dade	2016	RUN	21
Miami-Dade	2016	RUN	1
Miami-Dade	2016	RUN	1
Miami-Dade	2016	RUN	1
Miami-Dade	2016	RUN	1
Miami-Dade	2016	RUN	3
Miami-Dade	2016	RUN	11
Miami-Dade	2016	RUN	17
Miami-Dade	2016	RUN	2
Miami-Dade	2016	RUN	3
Miami-Dade	2016	RUN	16
Miami-Dade	2016	RUN	18
Miami-Dade	2016	RUN	6
Miami-Dade	2016	RUN	15
Miami-Dade	2016	RUN	15
Miami-Dade	2016	RUN	11
Miami-Dade	2016	RUN	1
Miami-Dade	2016	RUN	5
Miami-Dade	2016	RUN	7

CNTYNM	YEAR	MODE	TACTCNT
Miami-Dade	2016	RUN	3
Miami-Dade	2016	RUN	13
Miami-Dade	2016	RUN	9
Miami-Dade	2016	RUN	7
Miami-Dade	2016	RUN	13
Miami-Dade	2016	RUN	1
Miami-Dade	2016	RUN	9
Miami-Dade	2016	RUN	11
Miami-Dade	2016	RUN	1
Miami-Dade	2016	RUN	1
Miami-Dade	2016	RUN	1
Miami-Dade	2016	RUN	2
Miami-Dade	2016	RUN	2
Miami-Dade	2016	RUN	1
Miami-Dade	2016	RUN	1
Miami-Dade	2016	RUN	2
Miami-Dade	2016	RUN	2
Miami-Dade	2016	RUN	2
Miami-Dade	2016	RUN	1
Miami-Dade	2016	RUN	2
Miami-Dade	2016	RUN	1
Miami-Dade	2016	RUN	2
Miami-Dade	2016	RUN	1
Miami-Dade	2016	RUN	3
Miami-Dade	2016	RUN	2
Miami-Dade	2016	RUN	4
Miami-Dade	2016	RUN	4
Miami-Dade	2016	RUN	8
Miami-Dade	2016	RUN	2
Miami-Dade	2016	RUN	4
Miami-Dade	2016	RUN	1
Miami-Dade	2016	RUN	1
Miami-Dade	2016	RUN	4
Miami-Dade	2016	RUN	2
Miami-Dade	2016	RUN	8
Miami-Dade	2016	RUN	3
Miami-Dade	2016	RUN	1
Miami-Dade	2016	RUN	10
Miami-Dade	2016	RUN	8
Miami-Dade	2016	RUN	4
Miami-Dade	2016	RUN	1
Miami-Dade	2016	RUN	1
Miami-Dade	2016	RUN	2
Miami-Dade	2016	RUN	2
Miami-Dade	2016	RUN	17
Miami-Dade	2016	RUN	16
Miami-Dade	2016	RUN	1
Miami-Dade	2016	RUN	12
Miami-Dade	2016	RUN	10
Miami-Dade	2016	RUN	16
Miami-Dade	2016	RUN	16

CNTYNM	YEAR	MODE	TACTCNT
Miami-Dade	2016	RUN	10
Miami-Dade	2016	RUN	14
Miami-Dade	2016	RUN	10
Miami-Dade	2016	RUN	14
Miami-Dade	2016	RUN	5
Miami-Dade	2016	RUN	5
Miami-Dade	2016	RUN	14
Miami-Dade	2016	RUN	12
Miami-Dade	2016	RUN	1
Miami-Dade	2016	RUN	4
Miami-Dade	2016	RUN	1
Miami-Dade	2016	RUN	10
Miami-Dade	2016	RUN	15
Miami-Dade	2016	RUN	4
Miami-Dade	2016	RUN	9
Miami-Dade	2016	RUN	1
Miami-Dade	2016	RUN	1
Miami-Dade	2016	RUN	8
Miami-Dade	2016	RUN	10
Miami-Dade	2016	RUN	1
Miami-Dade	2016	RUN	10
Miami-Dade	2016	RUN	5
Miami-Dade	2016	RUN	1
Miami-Dade	2016	RUN	3
Miami-Dade	2016	RUN	3
Miami-Dade	2016	RUN	2
Miami-Dade	2016	RUN	2
Miami-Dade	2016	RUN	2
Miami-Dade	2016	RUN	2
Miami-Dade	2016	RUN	1
Miami-Dade	2016	RUN	1
Miami-Dade	2016	RUN	1
Miami-Dade	2016	RUN	31
Miami-Dade	2016	RUN	27
Miami-Dade	2016	RUN	1
Miami-Dade	2016	RUN	1
Miami-Dade	2016	RUN	1
Miami-Dade	2016	RUN	1
Miami-Dade	2016	RUN	1
Miami-Dade	2016	RUN	1
Miami-Dade	2016	RUN	1
Miami-Dade	2016	RUN	2
Miami-Dade	2016	RUN	2
Miami-Dade	2016	RUN	1
Miami-Dade	2016	RUN	2
Miami-Dade	2016	RUN	1
Miami-Dade	2016	RUN	1
Miami-Dade	2016	RUN	1
Miami-Dade	2016	RUN	1
Miami-Dade	2016	RUN	1
Miami-Dade	2016	RUN	1

CNTYNM	YEAR	MODE	TACTCNT
Miami-Dade	2016	RUN	1
Miami-Dade	2016	RUN	1
Miami-Dade	2016	RUN	1
Miami-Dade	2016	RUN	1
Miami-Dade	2016	RUN	1
Miami-Dade	2016	RUN	1
Miami-Dade	2016	RUN	1
Miami-Dade	2016	RUN	2
Miami-Dade	2016	RUN	4
Miami-Dade	2016	RUN	5
Miami-Dade	2016	RUN	1
Miami-Dade	2016	RUN	1
Miami-Dade	2016	RUN	2
Miami-Dade	2016	RUN	3
Miami-Dade	2016	RUN	1
Miami-Dade	2016	RUN	2
Miami-Dade	2016	RUN	1
Miami-Dade	2016	RUN	1
Miami-Dade	2016	RUN	1
Miami-Dade	2016	RUN	1
Miami-Dade	2016	RUN	1
Miami-Dade	2016	RUN	2
Miami-Dade	2016	RUN	1
Miami-Dade	2016	RUN	1
Miami-Dade	2016	RUN	1
Miami-Dade	2016	RUN	2
Miami-Dade	2016	RUN	2
Miami-Dade	2016	RUN	28
Miami-Dade	2016	RUN	42
Miami-Dade	2016	RUN	33
Miami-Dade	2016	RUN	26
Miami-Dade	2016	RUN	2
Miami-Dade	2016	RUN	2
Miami-Dade	2016	RUN	2
Miami-Dade	2016	RUN	3
Miami-Dade	2016	RUN	7
Miami-Dade	2016	RUN	10
Miami-Dade	2016	RUN	30
Miami-Dade	2016	RUN	6
Miami-Dade	2016	RUN	6
Miami-Dade	2016	RUN	4
Miami-Dade	2016	RUN	6
Miami-Dade	2016	RUN	25
Miami-Dade	2016	RUN	22
Miami-Dade	2016	RUN	3
Miami-Dade	2016	RUN	15
Miami-Dade	2016	RUN	5
Miami-Dade	2016	RUN	9
Miami-Dade	2016	RUN	10
Miami-Dade	2016	RUN	9

CNTYNM	YEAR	MODE	TACTCNT
Miami-Dade	2016	RUN	1
Miami-Dade	2016	RUN	1
Miami-Dade	2016	RUN	1
Miami-Dade	2016	RUN	2
Miami-Dade	2016	RUN	4
Miami-Dade	2016	RUN	1
Miami-Dade	2016	RUN	50
Miami-Dade	2016	RUN	60
Miami-Dade	2016	RUN	4
Miami-Dade	2016	RUN	4
Miami-Dade	2016	RUN	9
Miami-Dade	2016	RUN	13
Miami-Dade	2016	RUN	4
Miami-Dade	2016	RUN	4
Miami-Dade	2016	RUN	2
Miami-Dade	2016	RUN	3
Miami-Dade	2016	RUN	2
Miami-Dade	2016	RUN	3
Miami-Dade	2016	RUN	2
Miami-Dade	2016	RUN	26
Miami-Dade	2016	RUN	6
Miami-Dade	2016	RUN	14
Miami-Dade	2016	RUN	11
Miami-Dade	2016	RUN	3
Miami-Dade	2016	RUN	4
Miami-Dade	2016	RUN	4
Miami-Dade	2016	RUN	4
Miami-Dade	2016	RUN	4
Miami-Dade	2016	RUN	3
Miami-Dade	2016	RUN	1
Miami-Dade	2016	RUN	5
Miami-Dade	2016	RUN	1
Miami-Dade	2016	RUN	4
Miami-Dade	2016	RUN	6
Miami-Dade	2016	RUN	1
Miami-Dade	2016	RUN	6
Miami-Dade	2016	RUN	4
Miami-Dade	2016	RUN	1
Miami-Dade	2016	RUN	1
Miami-Dade	2016	RUN	24
Miami-Dade	2016	RUN	2
Miami-Dade	2016	RUN	2
Miami-Dade	2016	RUN	3
Miami-Dade	2016	RUN	25
Miami-Dade	2016	RUN	24
Miami-Dade	2016	RUN	2
Miami-Dade	2016	RUN	6
Miami-Dade	2016	RUN	1
Miami-Dade	2016	RUN	1
Miami-Dade	2016	RUN	1
Miami-Dade	2016	RUN	4

CNTYNM	YEAR	MODE	TACTCNT
Miami-Dade	2016	RUN	4
Miami-Dade	2016	RUN	12
Miami-Dade	2016	RUN	4
Miami-Dade	2016	RUN	5
Miami-Dade	2016	RUN	5
Miami-Dade	2016	RUN	2
Miami-Dade	2016	RUN	2
Miami-Dade	2016	RUN	2
Miami-Dade	2016	RUN	2
Miami-Dade	2016	RUN	1
Miami-Dade	2016	RUN	3
Miami-Dade	2016	RUN	2
Miami-Dade	2016	RUN	1
Miami-Dade	2016	RUN	1
Miami-Dade	2016	RUN	1
Miami-Dade	2016	RUN	18
Miami-Dade	2016	RUN	24
Miami-Dade	2016	RUN	1
Miami-Dade	2016	RUN	1
Miami-Dade	2016	RUN	1
Miami-Dade	2016	RUN	1
Miami-Dade	2016	RUN	3
Miami-Dade	2016	RUN	4
Miami-Dade	2016	RUN	2
Miami-Dade	2016	RUN	2
Miami-Dade	2016	RUN	25
Miami-Dade	2016	RUN	25
Miami-Dade	2016	RUN	4
Miami-Dade	2016	RUN	4
Miami-Dade	2016	RUN	14
Miami-Dade	2016	RUN	4
Miami-Dade	2016	RUN	5
Miami-Dade	2016	RUN	2
Miami-Dade	2016	RUN	1
Miami-Dade	2016	RUN	1
Miami-Dade	2016	RUN	1
Miami-Dade	2016	RUN	12
Miami-Dade	2016	RUN	5
Miami-Dade	2016	RUN	9
Miami-Dade	2016	RUN	7
Miami-Dade	2016	RUN	32
Miami-Dade	2016	RUN	30
Miami-Dade	2016	RUN	4
Miami-Dade	2016	RUN	8
Miami-Dade	2016	RUN	1
Miami-Dade	2016	RUN	8
Miami-Dade	2016	RUN	19
Miami-Dade	2016	RUN	18
Miami-Dade	2016	RUN	18
Miami-Dade	2016	RUN	6
Miami-Dade	2016	RUN	6

CNTYNM	YEAR	MODE	TACTCNT
Miami-Dade	2016	RUN	5
Miami-Dade	2016	RUN	4
Miami-Dade	2016	RUN	5
Miami-Dade	2016	RUN	3
Miami-Dade	2016	RUN	9
Miami-Dade	2016	RUN	9
Miami-Dade	2016	RUN	1
Miami-Dade	2016	RUN	1
Miami-Dade	2016	RUN	6
Miami-Dade	2016	RUN	4
Miami-Dade	2014	Ride	62
Miami-Dade	2014	Ride	24
Miami-Dade	2014	Ride	27
Miami-Dade	2014	Ride	98
Miami-Dade	2014	Ride	1294
Miami-Dade	2014	Ride	1353
Miami-Dade	2014	Ride	99
Miami-Dade	2014	Ride	99
Miami-Dade	2014	Ride	1
Miami-Dade	2014	Ride	2
Miami-Dade	2014	Ride	1
Miami-Dade	2014	Ride	900
Miami-Dade	2014	Ride	19
Miami-Dade	2014	Ride	293
Miami-Dade	2014	Ride	21
Miami-Dade	2014	Ride	17
Miami-Dade	2014	Ride	285
Miami-Dade	2014	Ride	239
Miami-Dade	2014	Ride	312
Miami-Dade	2014	Ride	31
Miami-Dade	2014	Ride	16
Miami-Dade	2014	Ride	28
Miami-Dade	2014	Ride	1
Miami-Dade	2014	Ride	16
Miami-Dade	2014	Ride	27
Miami-Dade	2014	Ride	1
Miami-Dade	2014	Ride	15
Miami-Dade	2014	Ride	16
Miami-Dade	2014	Ride	12
Miami-Dade	2014	Ride	7
Miami-Dade	2014	Ride	11
Miami-Dade	2014	Ride	13
Miami-Dade	2014	Ride	19
Miami-Dade	2014	Ride	1
Miami-Dade	2014	Ride	17
Miami-Dade	2014	Ride	20
Miami-Dade	2014	Ride	20
Miami-Dade	2014	Ride	24
Miami-Dade	2014	Ride	1
Miami-Dade	2014	Ride	1
Miami-Dade	2014	Ride	2

CNTYNM	YEAR	MODE	TACTCNT
Miami-Dade	2014	Ride	17
Miami-Dade	2014	Ride	12
Miami-Dade	2014	Ride	2
Miami-Dade	2014	Ride	17
Miami-Dade	2014	Ride	12
Miami-Dade	2014	Ride	16
Miami-Dade	2014	Ride	11
Miami-Dade	2014	Ride	11
Miami-Dade	2014	Ride	14
Miami-Dade	2014	Ride	5
Miami-Dade	2014	Ride	14
Miami-Dade	2014	Ride	1
Miami-Dade	2014	Ride	13
Miami-Dade	2014	Ride	12
Miami-Dade	2014	Ride	11
Miami-Dade	2014	Ride	16
Miami-Dade	2014	Ride	1
Miami-Dade	2014	Ride	17
Miami-Dade	2014	Ride	12
Miami-Dade	2014	Ride	12
Miami-Dade	2014	Ride	12
Miami-Dade	2014	Ride	12
Miami-Dade	2014	Ride	23
Miami-Dade	2014	Ride	31
Miami-Dade	2014	Ride	17
Miami-Dade	2014	Ride	12
Miami-Dade	2014	Ride	14
Miami-Dade	2014	Ride	7
Miami-Dade	2014	Ride	7
Miami-Dade	2014	Ride	114
Miami-Dade	2014	Ride	33
Miami-Dade	2014	Ride	114
Miami-Dade	2014	Ride	119
Miami-Dade	2014	Ride	76
Miami-Dade	2014	Ride	68
Miami-Dade	2014	Ride	65
Miami-Dade	2014	Ride	63
Miami-Dade	2014	Ride	6
Miami-Dade	2014	Ride	69
Miami-Dade	2014	Ride	73
Miami-Dade	2014	Ride	72
Miami-Dade	2014	Ride	63
Miami-Dade	2014	Ride	36
Miami-Dade	2014	Ride	48
Miami-Dade	2014	Ride	12
Miami-Dade	2014	Ride	57
Miami-Dade	2014	Ride	66
Miami-Dade	2014	Ride	68
Miami-Dade	2014	Ride	60
Miami-Dade	2014	Ride	60
Miami-Dade	2014	Ride	1

CNTYNM	YEAR	MODE	TACTCNT
Miami-Dade	2014	Ride	2
Miami-Dade	2014	Ride	10
Miami-Dade	2014	Ride	10
Miami-Dade	2014	Ride	23
Miami-Dade	2014	Ride	2
Miami-Dade	2014	Ride	1
Miami-Dade	2014	Ride	1
Miami-Dade	2014	Ride	20
Miami-Dade	2014	Ride	2
Miami-Dade	2014	Ride	6
Miami-Dade	2014	Ride	2
Miami-Dade	2014	Ride	2
Miami-Dade	2014	Ride	2
Miami-Dade	2014	Ride	9
Miami-Dade	2014	Ride	1
Miami-Dade	2014	Ride	4
Miami-Dade	2014	Ride	6
Miami-Dade	2014	Ride	9
Miami-Dade	2014	Ride	5
Miami-Dade	2014	Ride	1
Miami-Dade	2014	Ride	5
Miami-Dade	2014	Ride	21
Miami-Dade	2014	Ride	11
Miami-Dade	2014	Ride	5
Miami-Dade	2014	Ride	9
Miami-Dade	2014	Ride	12
Miami-Dade	2014	Ride	1
Miami-Dade	2014	Ride	18
Miami-Dade	2014	Ride	11
Miami-Dade	2014	Ride	10
Miami-Dade	2014	Ride	10
Miami-Dade	2014	Ride	79
Miami-Dade	2014	Ride	16
Miami-Dade	2014	Ride	3
Miami-Dade	2014	Ride	15
Miami-Dade	2014	Ride	15
Miami-Dade	2014	Ride	6
Miami-Dade	2014	Ride	14
Miami-Dade	2014	Ride	14
Miami-Dade	2014	Ride	13
Miami-Dade	2014	Ride	17
Miami-Dade	2014	Ride	7
Miami-Dade	2014	Ride	13
Miami-Dade	2014	Ride	14
Miami-Dade	2014	Ride	5
Miami-Dade	2014	Ride	5
Miami-Dade	2014	Ride	11
Miami-Dade	2014	Ride	8
Miami-Dade	2014	Ride	2
Miami-Dade	2014	Ride	6
Miami-Dade	2014	Ride	1

CNTYNM	YEAR	MODE	TACTCNT
Miami-Dade	2014	Ride	82
Miami-Dade	2014	Ride	3
Miami-Dade	2014	Ride	3
Miami-Dade	2014	Ride	4
Miami-Dade	2014	Ride	17
Miami-Dade	2014	Ride	81
Miami-Dade	2014	Ride	3
Miami-Dade	2014	Ride	3
Miami-Dade	2014	Ride	1
Miami-Dade	2014	Ride	81
Miami-Dade	2014	Ride	2
Miami-Dade	2014	Ride	3
Miami-Dade	2014	Ride	5
Miami-Dade	2014	Ride	3
Miami-Dade	2014	Ride	4
Miami-Dade	2014	Ride	81
Miami-Dade	2014	Ride	2
Miami-Dade	2014	Ride	3
Miami-Dade	2014	Ride	4
Miami-Dade	2014	Ride	4
Miami-Dade	2014	Ride	3
Miami-Dade	2014	Ride	16
Miami-Dade	2014	Ride	9
Miami-Dade	2014	Ride	2
Miami-Dade	2014	Ride	3
Miami-Dade	2014	Ride	6
Miami-Dade	2014	Ride	1
Miami-Dade	2014	Ride	4
Miami-Dade	2014	Ride	81
Miami-Dade	2014	Ride	1
Miami-Dade	2014	Ride	3
Miami-Dade	2014	Ride	1
Miami-Dade	2014	Ride	4
Miami-Dade	2014	Ride	3
Miami-Dade	2014	Ride	3
Miami-Dade	2014	Ride	4
Miami-Dade	2014	Ride	148
Miami-Dade	2014	Ride	149
Miami-Dade	2014	Ride	149
Miami-Dade	2014	Ride	4
Miami-Dade	2014	Ride	88
Miami-Dade	2014	Ride	89
Miami-Dade	2014	Ride	5
Miami-Dade	2014	Ride	92
Miami-Dade	2014	Ride	89
Miami-Dade	2014	Ride	88
Miami-Dade	2014	Ride	90
Miami-Dade	2014	Ride	90
Miami-Dade	2014	Ride	91
Miami-Dade	2014	Ride	89
Miami-Dade	2014	Ride	2

CNTYNM	YEAR	MODE	TACTCNT
Miami-Dade	2014	Ride	88
Miami-Dade	2014	Ride	138
Miami-Dade	2014	Ride	141
Miami-Dade	2014	Ride	137
Miami-Dade	2014	Ride	138
Miami-Dade	2014	Ride	11
Miami-Dade	2014	Ride	151
Miami-Dade	2014	Ride	3
Miami-Dade	2014	Ride	3
Miami-Dade	2014	Ride	2
Miami-Dade	2014	Ride	1
Miami-Dade	2014	Ride	2
Miami-Dade	2014	Ride	4
Miami-Dade	2014	Ride	1
Miami-Dade	2014	Ride	1
Miami-Dade	2014	Ride	54
Miami-Dade	2014	Ride	6
Miami-Dade	2014	Ride	5
Miami-Dade	2014	Ride	18
Miami-Dade	2014	Ride	12
Miami-Dade	2014	Ride	2
Miami-Dade	2014	Ride	10
Miami-Dade	2014	Ride	17
Miami-Dade	2014	Ride	12
Miami-Dade	2014	Ride	19
Miami-Dade	2014	Ride	2
Miami-Dade	2014	Ride	1
Miami-Dade	2014	Ride	1
Miami-Dade	2014	Ride	54
Miami-Dade	2014	Ride	5
Miami-Dade	2014	Ride	10
Miami-Dade	2014	Ride	9
Miami-Dade	2014	Ride	7
Miami-Dade	2014	Ride	3
Miami-Dade	2014	Ride	2
Miami-Dade	2014	Ride	4
Miami-Dade	2014	Ride	2
Miami-Dade	2014	Ride	4
Miami-Dade	2014	Ride	1
Miami-Dade	2014	Ride	4
Miami-Dade	2014	Ride	2
Miami-Dade	2014	Ride	4
Miami-Dade	2014	Ride	5
Miami-Dade	2014	Ride	12
Miami-Dade	2014	Ride	4
Miami-Dade	2014	Ride	1
Miami-Dade	2014	Ride	5
Miami-Dade	2014	Ride	4
Miami-Dade	2014	Ride	5
Miami-Dade	2014	Ride	4
Miami-Dade	2014	Ride	3

CNTYNM	YEAR	MODE	TACTCNT
Miami-Dade	2014	Ride	54
Miami-Dade	2014	Ride	2
Miami-Dade	2014	Ride	2
Miami-Dade	2014	Ride	2
Miami-Dade	2014	Ride	2
Miami-Dade	2014	Ride	17
Miami-Dade	2014	Ride	10
Miami-Dade	2014	Ride	26
Miami-Dade	2014	Ride	2
Miami-Dade	2014	Ride	2
Miami-Dade	2014	Ride	6
Miami-Dade	2014	Ride	1
Miami-Dade	2014	Ride	2
Miami-Dade	2014	Ride	10
Miami-Dade	2014	Ride	53
Miami-Dade	2014	Ride	27
Miami-Dade	2014	Ride	2
Miami-Dade	2014	Ride	12
Miami-Dade	2014	Ride	2
Miami-Dade	2014	Ride	5
Miami-Dade	2014	Ride	1
Miami-Dade	2014	Ride	1
Miami-Dade	2014	Ride	1
Miami-Dade	2014	Ride	12
Miami-Dade	2014	Ride	53
Miami-Dade	2014	Ride	26
Miami-Dade	2014	Ride	26
Miami-Dade	2014	Ride	2
Miami-Dade	2014	Ride	2
Miami-Dade	2014	Ride	16
Miami-Dade	2014	Ride	4
Miami-Dade	2014	Ride	1
Miami-Dade	2014	Ride	53
Miami-Dade	2014	Ride	2
Miami-Dade	2014	Ride	4
Miami-Dade	2014	Ride	12
Miami-Dade	2014	Ride	2
Miami-Dade	2014	Ride	2
Miami-Dade	2014	Ride	27
Miami-Dade	2014	Ride	29
Miami-Dade	2014	Ride	2
Miami-Dade	2014	Ride	2
Miami-Dade	2014	Ride	3
Miami-Dade	2014	Ride	1
Miami-Dade	2014	Ride	1
Miami-Dade	2014	Ride	56
Miami-Dade	2014	Ride	2
Miami-Dade	2014	Ride	2
Miami-Dade	2014	Ride	16
Miami-Dade	2014	Ride	77
Miami-Dade	2014	Ride	10

CNTYNM	YEAR	MODE	TACTCNT
Miami-Dade	2014	Ride	78
Miami-Dade	2014	Ride	78
Miami-Dade	2014	Ride	78
Miami-Dade	2014	Ride	29
Miami-Dade	2014	Ride	75
Miami-Dade	2014	Ride	2
Miami-Dade	2014	Ride	77
Miami-Dade	2014	Ride	2
Miami-Dade	2014	Ride	76
Miami-Dade	2014	Ride	78
Miami-Dade	2014	Ride	4
Miami-Dade	2014	Ride	77
Miami-Dade	2014	Ride	1
Miami-Dade	2014	Ride	79
Miami-Dade	2014	Ride	80
Miami-Dade	2014	Ride	80
Miami-Dade	2014	Ride	1
Miami-Dade	2014	Ride	80
Miami-Dade	2014	Ride	80
Miami-Dade	2014	Ride	57
Miami-Dade	2014	Ride	24
Miami-Dade	2014	Ride	13
Miami-Dade	2014	Ride	12
Miami-Dade	2014	Ride	18
Miami-Dade	2014	Ride	3
Miami-Dade	2014	Ride	2
Miami-Dade	2014	Ride	7
Miami-Dade	2014	Ride	6
Miami-Dade	2014	Ride	1
Miami-Dade	2014	Ride	2
Miami-Dade	2014	Ride	9
Miami-Dade	2014	Ride	35
Miami-Dade	2014	Ride	32
Miami-Dade	2014	Ride	31
Miami-Dade	2014	Ride	7
Miami-Dade	2014	Ride	8
Miami-Dade	2014	Ride	8
Miami-Dade	2014	Ride	8
Miami-Dade	2014	Ride	16
Miami-Dade	2014	Ride	2
Miami-Dade	2014	Ride	7
Miami-Dade	2014	Ride	1
Miami-Dade	2014	Ride	1
Miami-Dade	2014	Ride	1
Miami-Dade	2014	Ride	3
Miami-Dade	2014	Ride	6
Miami-Dade	2014	Ride	1
Miami-Dade	2014	Ride	9
Miami-Dade	2014	Ride	2
Miami-Dade	2014	Ride	9
Miami-Dade	2014	Ride	7

CNTYNM	YEAR	MODE	TACTCNT
Miami-Dade	2014	Ride	15
Miami-Dade	2014	Ride	10
Miami-Dade	2014	Ride	38
Miami-Dade	2014	Ride	2
Miami-Dade	2014	Ride	1
Miami-Dade	2014	Ride	2
Miami-Dade	2014	Ride	2
Miami-Dade	2014	Ride	2
Miami-Dade	2014	Ride	1
Miami-Dade	2014	Ride	4
Miami-Dade	2014	Ride	8
Miami-Dade	2014	Ride	11
Miami-Dade	2014	Ride	1
Miami-Dade	2014	Ride	21
Miami-Dade	2014	Ride	35
Miami-Dade	2014	Ride	26
Miami-Dade	2014	Ride	3
Miami-Dade	2014	Ride	3
Miami-Dade	2014	Ride	1
Miami-Dade	2014	Ride	1
Miami-Dade	2014	Ride	1
Miami-Dade	2014	Ride	1
Miami-Dade	2014	Ride	8
Miami-Dade	2014	Ride	5
Miami-Dade	2014	Ride	25
Miami-Dade	2014	Ride	1
Miami-Dade	2014	Ride	2
Miami-Dade	2014	Ride	6
Miami-Dade	2014	Ride	1
Miami-Dade	2014	Ride	11
Miami-Dade	2014	Ride	2
Miami-Dade	2014	Ride	1
Miami-Dade	2014	Ride	9
Miami-Dade	2014	Ride	11
Miami-Dade	2014	Ride	2
Miami-Dade	2014	Ride	10
Miami-Dade	2014	Ride	24
Miami-Dade	2014	Ride	11
Miami-Dade	2014	Ride	37
Miami-Dade	2014	Ride	2
Miami-Dade	2014	Ride	14
Miami-Dade	2014	Ride	35
Miami-Dade	2014	Ride	4
Miami-Dade	2014	Ride	15
Miami-Dade	2014	Ride	8
Miami-Dade	2014	Ride	12
Miami-Dade	2014	Ride	4
Miami-Dade	2014	Ride	7
Miami-Dade	2014	Ride	15
Miami-Dade	2014	Ride	13
Miami-Dade	2014	Ride	1

CNTYNM	YEAR	MODE	TACTCNT
Miami-Dade	2014	Ride	15
Miami-Dade	2014	Ride	49
Miami-Dade	2014	Ride	18
Miami-Dade	2014	Ride	27
Miami-Dade	2014	Ride	9
Miami-Dade	2014	Ride	9
Miami-Dade	2014	Ride	1
Miami-Dade	2014	Ride	1
Miami-Dade	2014	Ride	2
Miami-Dade	2014	Ride	2
Miami-Dade	2014	Ride	2
Miami-Dade	2014	Ride	5
Miami-Dade	2014	Ride	5
Miami-Dade	2014	Ride	2
Miami-Dade	2014	Ride	3
Miami-Dade	2014	Ride	2
Miami-Dade	2014	Ride	1
Miami-Dade	2014	Ride	1
Miami-Dade	2014	Ride	1
Miami-Dade	2014	Ride	15
Miami-Dade	2014	Ride	4
Miami-Dade	2014	Ride	2
Miami-Dade	2014	Ride	2
Miami-Dade	2014	Ride	4
Miami-Dade	2014	Ride	3
Miami-Dade	2014	Ride	2
Miami-Dade	2014	Ride	16
Miami-Dade	2014	Ride	16
Miami-Dade	2014	Ride	10
Miami-Dade	2014	Ride	27
Miami-Dade	2014	Ride	27
Miami-Dade	2014	Ride	18
Miami-Dade	2014	Ride	18
Miami-Dade	2014	Ride	18
Miami-Dade	2014	Ride	18
Miami-Dade	2014	Ride	46
Miami-Dade	2014	Ride	39
Miami-Dade	2014	Ride	26
Miami-Dade	2014	Ride	6
Miami-Dade	2014	Ride	25
Miami-Dade	2014	Ride	49
Miami-Dade	2014	Ride	2
Miami-Dade	2014	Ride	1
Miami-Dade	2014	Ride	9
Miami-Dade	2014	Ride	15
Miami-Dade	2014	Ride	23
Miami-Dade	2014	Ride	26
Miami-Dade	2014	Ride	15
Miami-Dade	2014	Ride	11
Miami-Dade	2014	Ride	3
Miami-Dade	2014	Ride	5

CNTYNM	YEAR	MODE	TACTCNT
Miami-Dade	2014	Ride	96
Miami-Dade	2014	Ride	96
Miami-Dade	2014	Ride	11
Miami-Dade	2014	Ride	13
Miami-Dade	2014	Ride	98
Miami-Dade	2014	Ride	10
Miami-Dade	2014	Ride	104
Miami-Dade	2014	Ride	102
Miami-Dade	2014	Ride	3
Miami-Dade	2014	Ride	95
Miami-Dade	2014	Ride	86
Miami-Dade	2014	Ride	3
Miami-Dade	2014	Ride	5
Miami-Dade	2014	Ride	10
Miami-Dade	2014	Ride	14
Miami-Dade	2014	Ride	10
Miami-Dade	2014	Ride	30
Miami-Dade	2014	Ride	15
Miami-Dade	2014	Ride	6
Miami-Dade	2014	Ride	3
Miami-Dade	2014	Ride	6
Miami-Dade	2014	Ride	5
Miami-Dade	2014	Ride	43
Miami-Dade	2014	Ride	13
Miami-Dade	2014	Ride	14
Miami-Dade	2014	Ride	8
Miami-Dade	2014	Ride	23
Miami-Dade	2014	Ride	28
Miami-Dade	2014	Ride	15
Miami-Dade	2014	Ride	15
Miami-Dade	2014	Ride	48
Miami-Dade	2014	Ride	33
Miami-Dade	2014	Ride	1
Miami-Dade	2014	Ride	9
Miami-Dade	2014	Ride	15
Miami-Dade	2014	Ride	3
Miami-Dade	2014	Ride	8
Miami-Dade	2014	Ride	2
Miami-Dade	2014	Ride	32
Miami-Dade	2014	Ride	2
Miami-Dade	2014	Ride	10
Miami-Dade	2014	Ride	1
Miami-Dade	2014	Ride	16
Miami-Dade	2014	Ride	2
Miami-Dade	2014	Ride	31
Miami-Dade	2014	Ride	5
Miami-Dade	2014	Ride	30
Miami-Dade	2014	Ride	23
Miami-Dade	2014	Ride	10
Miami-Dade	2014	Ride	3
Miami-Dade	2014	Ride	15

CNTYNM	YEAR	MODE	TACTCNT
Miami-Dade	2014	Ride	10
Miami-Dade	2014	Ride	7
Miami-Dade	2014	Ride	5
Miami-Dade	2014	Ride	35
Miami-Dade	2014	Ride	30
Miami-Dade	2014	Ride	10
Miami-Dade	2014	Ride	29
Miami-Dade	2014	Ride	39
Miami-Dade	2014	Ride	28
Miami-Dade	2014	Ride	12
Miami-Dade	2014	Ride	13
Miami-Dade	2014	Ride	4
Miami-Dade	2014	Ride	6
Miami-Dade	2014	Ride	8
Miami-Dade	2014	Ride	5
Miami-Dade	2014	Ride	35
Miami-Dade	2014	Ride	41
Miami-Dade	2014	Ride	2
Miami-Dade	2014	Ride	35
Miami-Dade	2014	Ride	34
Miami-Dade	2014	Ride	33
Miami-Dade	2014	Ride	3
Miami-Dade	2014	Ride	9
Miami-Dade	2014	Ride	6
Miami-Dade	2014	Ride	7
Miami-Dade	2014	Ride	7
Miami-Dade	2014	Ride	2
Miami-Dade	2014	Ride	38
Miami-Dade	2014	Ride	2
Miami-Dade	2014	Ride	34
Miami-Dade	2014	Ride	34
Miami-Dade	2014	Ride	32
Miami-Dade	2014	Ride	2
Miami-Dade	2014	Ride	9
Miami-Dade	2014	Ride	2
Miami-Dade	2014	Ride	44
Miami-Dade	2014	Ride	3
Miami-Dade	2014	Ride	8
Miami-Dade	2014	Ride	1
Miami-Dade	2014	Ride	74
Miami-Dade	2014	Ride	8
Miami-Dade	2014	Ride	9
Miami-Dade	2014	Ride	43
Miami-Dade	2014	Ride	69
Miami-Dade	2014	Ride	78
Miami-Dade	2014	Ride	34
Miami-Dade	2014	Ride	33
Miami-Dade	2014	Ride	32
Miami-Dade	2014	Ride	5
Miami-Dade	2014	Ride	10
Miami-Dade	2014	Ride	4

CNTYNM	YEAR	MODE	TACTCNT
Miami-Dade	2014	Ride	10
Miami-Dade	2014	Ride	2
Miami-Dade	2014	Ride	43
Miami-Dade	2014	Ride	38
Miami-Dade	2014	Ride	10
Miami-Dade	2014	Ride	9
Miami-Dade	2014	Ride	12
Miami-Dade	2014	Ride	7
Miami-Dade	2014	Ride	3
Miami-Dade	2014	Ride	7
Miami-Dade	2014	Ride	44
Miami-Dade	2014	Ride	6
Miami-Dade	2014	Ride	46
Miami-Dade	2014	Ride	2
Miami-Dade	2014	Ride	32
Miami-Dade	2014	Ride	32
Miami-Dade	2014	Ride	27
Miami-Dade	2014	Ride	8
Miami-Dade	2014	Ride	13
Miami-Dade	2014	Ride	5
Miami-Dade	2014	Ride	13
Miami-Dade	2014	Ride	6
Miami-Dade	2014	Ride	46
Miami-Dade	2014	Ride	19
Miami-Dade	2014	Ride	28
Miami-Dade	2014	Ride	49
Miami-Dade	2014	Ride	6
Miami-Dade	2014	Ride	25
Miami-Dade	2014	Ride	29
Miami-Dade	2014	Ride	22
Miami-Dade	2014	Ride	13
Miami-Dade	2014	Ride	56
Miami-Dade	2014	Ride	17
Miami-Dade	2014	Ride	12
Miami-Dade	2014	Ride	40
Miami-Dade	2014	Ride	13
Miami-Dade	2014	Ride	48
Miami-Dade	2014	Ride	8
Miami-Dade	2014	Ride	16
Miami-Dade	2014	Ride	22
Miami-Dade	2014	Ride	15
Miami-Dade	2014	Ride	10
Miami-Dade	2014	Ride	44
Miami-Dade	2014	Ride	3
Miami-Dade	2014	Ride	9
Miami-Dade	2014	Ride	35
Miami-Dade	2014	Ride	17
Miami-Dade	2014	Ride	10
Miami-Dade	2014	Ride	24
Miami-Dade	2014	Ride	17
Miami-Dade	2014	Ride	3

CNTYNM	YEAR	MODE	TACTCNT
Miami-Dade	2014	Ride	1
Miami-Dade	2014	Ride	54
Miami-Dade	2014	Ride	7
Miami-Dade	2014	Ride	28
Miami-Dade	2014	Ride	11
Miami-Dade	2014	Ride	7
Miami-Dade	2014	Ride	5
Miami-Dade	2014	Ride	55
Miami-Dade	2014	Ride	1
Miami-Dade	2014	Ride	35
Miami-Dade	2014	Ride	2
Miami-Dade	2014	Ride	22
Miami-Dade	2014	Ride	2
Miami-Dade	2014	Ride	57
Miami-Dade	2014	Ride	5
Miami-Dade	2014	Ride	3
Miami-Dade	2014	Ride	2
Miami-Dade	2014	Ride	5
Miami-Dade	2014	Ride	22
Miami-Dade	2014	Ride	5
Miami-Dade	2014	Ride	21
Miami-Dade	2014	Ride	36
Miami-Dade	2014	Ride	60
Miami-Dade	2014	Ride	6
Miami-Dade	2014	Ride	41
Miami-Dade	2014	Ride	24
Miami-Dade	2014	Ride	187
Miami-Dade	2014	Ride	20
Miami-Dade	2014	Ride	39
Miami-Dade	2014	Ride	12
Miami-Dade	2014	Ride	66
Miami-Dade	2014	Ride	74
Miami-Dade	2014	Ride	184
Miami-Dade	2014	Ride	20
Miami-Dade	2014	Ride	29
Miami-Dade	2014	Ride	22
Miami-Dade	2014	Ride	29
Miami-Dade	2014	Ride	21
Miami-Dade	2014	Ride	142
Miami-Dade	2014	Ride	139
Miami-Dade	2014	Ride	152
Miami-Dade	2014	Ride	31
Miami-Dade	2014	Ride	45
Miami-Dade	2014	Ride	56
Miami-Dade	2014	Ride	58
Miami-Dade	2014	Ride	130
Miami-Dade	2014	Ride	5
Miami-Dade	2014	Ride	11
Miami-Dade	2014	Ride	2
Miami-Dade	2014	Ride	4
Miami-Dade	2014	Ride	5

CNTYNM	YEAR	MODE	TACTCNT
Miami-Dade	2014	Ride	13
Miami-Dade	2014	Ride	2
Miami-Dade	2014	Ride	125
Miami-Dade	2014	Ride	74
Miami-Dade	2014	Ride	29
Miami-Dade	2014	Ride	5
Miami-Dade	2014	Ride	26
Miami-Dade	2014	Ride	118
Miami-Dade	2014	Ride	1
Miami-Dade	2014	Ride	4
Miami-Dade	2014	Ride	5
Miami-Dade	2014	Ride	14
Miami-Dade	2014	Ride	2
Miami-Dade	2014	Ride	123
Miami-Dade	2014	Ride	85
Miami-Dade	2014	Ride	9
Miami-Dade	2014	Ride	11
Miami-Dade	2014	Ride	112
Miami-Dade	2014	Ride	85
Miami-Dade	2014	Ride	88
Miami-Dade	2014	Ride	10
Miami-Dade	2014	Ride	3
Miami-Dade	2014	Ride	11
Miami-Dade	2014	Ride	119
Miami-Dade	2014	Ride	4
Miami-Dade	2014	Ride	5
Miami-Dade	2014	Ride	10
Miami-Dade	2014	Ride	13
Miami-Dade	2014	Ride	3
Miami-Dade	2014	Ride	12
Miami-Dade	2014	Ride	15
Miami-Dade	2014	Ride	25
Miami-Dade	2014	Ride	15
Miami-Dade	2014	Ride	4
Miami-Dade	2014	Ride	14
Miami-Dade	2014	Ride	117
Miami-Dade	2014	Ride	115
Miami-Dade	2014	Ride	5
Miami-Dade	2014	Ride	25
Miami-Dade	2014	Ride	8
Miami-Dade	2014	Ride	175
Miami-Dade	2014	Ride	13
Miami-Dade	2014	Ride	176
Miami-Dade	2014	Ride	175
Miami-Dade	2014	Ride	176
Miami-Dade	2014	Ride	247
Miami-Dade	2014	Ride	163
Miami-Dade	2014	Ride	175
Miami-Dade	2014	Ride	4
Miami-Dade	2014	Ride	167
Miami-Dade	2014	Ride	163

CNTYNM	YEAR	MODE	TACTCNT
Miami-Dade	2014	Ride	8
Miami-Dade	2014	Ride	8
Miami-Dade	2014	Ride	7
Miami-Dade	2014	Ride	14
Miami-Dade	2014	Ride	6
Miami-Dade	2014	Ride	13
Miami-Dade	2014	Ride	128
Miami-Dade	2014	Ride	22
Miami-Dade	2014	Ride	10
Miami-Dade	2014	Ride	8
Miami-Dade	2014	Ride	14
Miami-Dade	2014	Ride	1
Miami-Dade	2014	Ride	1
Miami-Dade	2014	Ride	6
Miami-Dade	2014	Ride	8
Miami-Dade	2014	Ride	7
Miami-Dade	2014	Ride	109
Miami-Dade	2014	Ride	9
Miami-Dade	2014	Ride	5
Miami-Dade	2014	Ride	3
Miami-Dade	2014	Ride	75
Miami-Dade	2014	Ride	6
Miami-Dade	2014	Ride	10
Miami-Dade	2014	Ride	1
Miami-Dade	2014	Ride	6
Miami-Dade	2014	Ride	11
Miami-Dade	2014	Ride	8
Miami-Dade	2014	Ride	3
Miami-Dade	2014	Ride	120
Miami-Dade	2014	Ride	4
Miami-Dade	2014	Ride	7
Miami-Dade	2014	Ride	3
Miami-Dade	2014	Ride	1
Miami-Dade	2014	Ride	2
Miami-Dade	2014	Ride	10
Miami-Dade	2014	Ride	10
Miami-Dade	2014	Ride	117
Miami-Dade	2014	Ride	19
Miami-Dade	2014	Ride	9
Miami-Dade	2014	Ride	14
Miami-Dade	2014	Ride	77
Miami-Dade	2014	Ride	10
Miami-Dade	2014	Ride	1
Miami-Dade	2014	Ride	10
Miami-Dade	2014	Ride	7
Miami-Dade	2014	Ride	9
Miami-Dade	2014	Ride	122
Miami-Dade	2014	Ride	7
Miami-Dade	2014	Ride	9
Miami-Dade	2014	Ride	87
Miami-Dade	2014	Ride	2

CNTYNM	YEAR	MODE	TACTCNT
Miami-Dade	2014	Ride	2
Miami-Dade	2014	Ride	54
Miami-Dade	2014	Ride	8
Miami-Dade	2014	Ride	5
Miami-Dade	2014	Ride	1
Miami-Dade	2014	Ride	8
Miami-Dade	2014	Ride	6
Miami-Dade	2014	Ride	15
Miami-Dade	2014	Ride	9
Miami-Dade	2014	Ride	3
Miami-Dade	2014	Ride	90
Miami-Dade	2014	Ride	58
Miami-Dade	2014	Ride	56
Miami-Dade	2014	Ride	18
Miami-Dade	2014	Ride	3
Miami-Dade	2014	Ride	141
Miami-Dade	2014	Ride	1
Miami-Dade	2014	Ride	8
Miami-Dade	2014	Ride	7
Miami-Dade	2014	Ride	121
Miami-Dade	2014	Ride	1
Miami-Dade	2014	Ride	219
Miami-Dade	2014	Ride	210
Miami-Dade	2014	Ride	214
Miami-Dade	2014	Ride	9
Miami-Dade	2014	Ride	227
Miami-Dade	2014	Ride	210
Miami-Dade	2014	Ride	20
Miami-Dade	2014	Ride	118
Miami-Dade	2014	Ride	144
Miami-Dade	2014	Ride	10
Miami-Dade	2014	Ride	50
Miami-Dade	2014	Ride	4
Miami-Dade	2014	Ride	6
Miami-Dade	2014	Ride	6
Miami-Dade	2014	Ride	16
Miami-Dade	2014	Ride	1
Miami-Dade	2014	Ride	3
Miami-Dade	2014	Ride	144
Miami-Dade	2014	Ride	15
Miami-Dade	2014	Ride	7
Miami-Dade	2014	Ride	120
Miami-Dade	2014	Ride	143
Miami-Dade	2014	Ride	129
Miami-Dade	2014	Ride	9
Miami-Dade	2014	Ride	47
Miami-Dade	2014	Ride	30
Miami-Dade	2014	Ride	8
Miami-Dade	2014	Ride	25
Miami-Dade	2014	Ride	25
Miami-Dade	2014	Ride	20

CNTYNM	YEAR	MODE	TACTCNT
Miami-Dade	2014	Ride	113
Miami-Dade	2014	Ride	3
Miami-Dade	2014	Ride	142
Miami-Dade	2014	Ride	10
Miami-Dade	2014	Ride	47
Miami-Dade	2014	Ride	22
Miami-Dade	2014	Ride	30
Miami-Dade	2014	Ride	113
Miami-Dade	2014	Ride	2
Miami-Dade	2014	Ride	140
Miami-Dade	2014	Ride	7
Miami-Dade	2014	Ride	42
Miami-Dade	2014	Ride	31
Miami-Dade	2014	Ride	2
Miami-Dade	2014	Ride	2
Miami-Dade	2014	Ride	3
Miami-Dade	2014	Ride	108
Miami-Dade	2014	Ride	16
Miami-Dade	2014	Ride	17
Miami-Dade	2014	Ride	32
Miami-Dade	2014	Ride	107
Miami-Dade	2014	Ride	140
Miami-Dade	2014	Ride	7
Miami-Dade	2014	Ride	42
Miami-Dade	2014	Ride	32
Miami-Dade	2014	Ride	1
Miami-Dade	2014	Ride	112
Miami-Dade	2014	Ride	111
Miami-Dade	2014	Ride	5
Miami-Dade	2014	Ride	142
Miami-Dade	2014	Ride	30
Miami-Dade	2014	Ride	45
Miami-Dade	2014	Ride	16
Miami-Dade	2014	Ride	112
Miami-Dade	2014	Ride	17
Miami-Dade	2014	Ride	2
Miami-Dade	2014	Ride	19
Miami-Dade	2014	Ride	20
Miami-Dade	2014	Ride	132
Miami-Dade	2014	Ride	14
Miami-Dade	2014	Ride	143
Miami-Dade	2014	Ride	123
Miami-Dade	2014	Ride	131
Miami-Dade	2014	Ride	1
Miami-Dade	2014	Ride	315
Miami-Dade	2014	Ride	6
Miami-Dade	2014	Ride	319
Miami-Dade	2014	Ride	274
Miami-Dade	2014	Ride	214
Miami-Dade	2014	Ride	522
Miami-Dade	2014	Ride	514

CNTYNM	YEAR	MODE	TACTCNT
Miami-Dade	2014	Ride	500
Miami-Dade	2014	Ride	362
Miami-Dade	2014	Ride	512
Miami-Dade	2014	Ride	538
Miami-Dade	2014	Ride	558
Miami-Dade	2014	Ride	25
Miami-Dade	2014	Ride	7
Miami-Dade	2014	Ride	64
Miami-Dade	2014	Ride	2
Miami-Dade	2014	Ride	2
Miami-Dade	2014	Ride	8
Miami-Dade	2014	Ride	1
Miami-Dade	2014	Ride	89
Miami-Dade	2014	Ride	24
Miami-Dade	2014	Ride	8
Miami-Dade	2014	Ride	2
Miami-Dade	2014	Ride	92
Miami-Dade	2014	Ride	4
Miami-Dade	2014	Ride	2
Miami-Dade	2014	Ride	2
Miami-Dade	2014	Ride	1
Miami-Dade	2014	Ride	9
Miami-Dade	2014	Ride	1
Miami-Dade	2014	Ride	5
Miami-Dade	2014	Ride	2
Miami-Dade	2014	Ride	87
Miami-Dade	2014	Ride	95
Miami-Dade	2014	Ride	1
Miami-Dade	2014	Ride	45
Miami-Dade	2014	Ride	134
Miami-Dade	2014	Ride	83
Miami-Dade	2014	Ride	6
Miami-Dade	2014	Ride	67
Miami-Dade	2014	Ride	72
Miami-Dade	2014	Ride	7
Miami-Dade	2014	Ride	74
Miami-Dade	2014	Ride	77
Miami-Dade	2014	Ride	89
Miami-Dade	2014	Ride	79
Miami-Dade	2014	Ride	18
Miami-Dade	2014	Ride	93
Miami-Dade	2014	Ride	103
Miami-Dade	2014	Ride	4
Miami-Dade	2014	Ride	25
Miami-Dade	2014	Ride	103
Miami-Dade	2014	Ride	75
Miami-Dade	2014	Ride	3
Miami-Dade	2014	Ride	6
Miami-Dade	2014	Ride	3
Miami-Dade	2014	Ride	8
Miami-Dade	2014	Ride	2

CNTYNM	YEAR	MODE	TACTCNT
Miami-Dade	2014	Ride	1
Miami-Dade	2014	Ride	6
Miami-Dade	2014	Ride	7
Miami-Dade	2014	Ride	98
Miami-Dade	2014	Ride	4
Miami-Dade	2014	Ride	1
Miami-Dade	2014	Ride	5
Miami-Dade	2014	Ride	1
Miami-Dade	2014	Ride	182
Miami-Dade	2014	Ride	75
Miami-Dade	2014	Ride	121
Miami-Dade	2014	Ride	163
Miami-Dade	2014	Ride	105
Miami-Dade	2014	Ride	39
Miami-Dade	2014	Ride	64
Miami-Dade	2014	Ride	6
Miami-Dade	2014	Ride	67
Miami-Dade	2014	Ride	58
Miami-Dade	2014	Ride	1
Miami-Dade	2014	Ride	60
Miami-Dade	2014	Ride	59
Miami-Dade	2014	Ride	98
Miami-Dade	2014	Ride	31
Miami-Dade	2014	Ride	43
Miami-Dade	2014	Ride	36
Miami-Dade	2014	Ride	3
Miami-Dade	2014	Ride	151
Miami-Dade	2014	Ride	150
Miami-Dade	2014	Ride	9
Miami-Dade	2014	Ride	3
Miami-Dade	2014	Ride	153
Miami-Dade	2014	Ride	9
Miami-Dade	2014	Ride	2
Miami-Dade	2014	Ride	5
Miami-Dade	2014	Ride	6
Miami-Dade	2014	Ride	9
Miami-Dade	2014	Ride	99
Miami-Dade	2014	Ride	145
Miami-Dade	2014	Ride	2
Miami-Dade	2014	Ride	9
Miami-Dade	2014	Ride	9
Miami-Dade	2014	Ride	4
Miami-Dade	2014	Ride	1
Miami-Dade	2014	Ride	1
Miami-Dade	2014	Ride	6
Miami-Dade	2014	Ride	4
Miami-Dade	2014	Ride	89
Miami-Dade	2014	Ride	35
Miami-Dade	2014	Ride	1
Miami-Dade	2014	Ride	1
Miami-Dade	2014	Ride	19

CNTYNM	YEAR	MODE	TACTCNT
Miami-Dade	2014	Ride	13
Miami-Dade	2014	Ride	151
Miami-Dade	2014	Ride	2
Miami-Dade	2014	Ride	2
Miami-Dade	2014	Ride	154
Miami-Dade	2014	Ride	3
Miami-Dade	2014	Ride	8
Miami-Dade	2014	Ride	2
Miami-Dade	2014	Ride	156
Miami-Dade	2014	Ride	10
Miami-Dade	2014	Ride	3
Miami-Dade	2014	Ride	3
Miami-Dade	2014	Ride	1
Miami-Dade	2014	Ride	1
Miami-Dade	2014	Ride	2
Miami-Dade	2014	Ride	3
Miami-Dade	2014	Ride	2
Miami-Dade	2014	Ride	7
Miami-Dade	2014	Ride	10
Miami-Dade	2014	Ride	10
Miami-Dade	2014	Ride	3
Miami-Dade	2014	Ride	1295
Miami-Dade	2014	Ride	9
Miami-Dade	2014	Ride	3
Miami-Dade	2014	Ride	1290
Miami-Dade	2014	Ride	4
Miami-Dade	2014	Ride	1304
Miami-Dade	2014	Ride	22
Miami-Dade	2014	Ride	459
Miami-Dade	2014	Ride	1329
Miami-Dade	2014	Ride	7
Miami-Dade	2014	Ride	1271
Miami-Dade	2014	Ride	31
Miami-Dade	2014	Ride	23
Miami-Dade	2014	Ride	246
Miami-Dade	2014	Ride	1282
Miami-Dade	2014	Ride	1309
Miami-Dade	2014	Ride	1
Miami-Dade	2014	Ride	1308
Miami-Dade	2014	Ride	4
Miami-Dade	2014	Ride	1318
Miami-Dade	2014	Ride	1
Miami-Dade	2014	Ride	1333
Miami-Dade	2014	Ride	1369
Miami-Dade	2014	Ride	784
Miami-Dade	2014	Ride	1332
Miami-Dade	2014	Ride	490
Miami-Dade	2014	Ride	1415
Miami-Dade	2014	Ride	269
Miami-Dade	2014	Ride	1339
Miami-Dade	2014	Ride	732

CNTYNM	YEAR	MODE	TACTCNT
Miami-Dade	2014	Ride	1368
Miami-Dade	2014	Ride	2
Miami-Dade	2014	Ride	2
Miami-Dade	2014	Ride	2
Miami-Dade	2014	Ride	4
Miami-Dade	2014	Ride	503
Miami-Dade	2014	Ride	2
Miami-Dade	2014	Ride	1
Miami-Dade	2014	Ride	1
Miami-Dade	2014	Ride	1
Miami-Dade	2014	Ride	9
Miami-Dade	2014	Ride	1
Miami-Dade	2014	Ride	3
Miami-Dade	2014	Ride	1
Miami-Dade	2014	Ride	1
Miami-Dade	2014	Ride	9
Miami-Dade	2014	Ride	4
Miami-Dade	2014	Ride	9
Miami-Dade	2014	Ride	6
Miami-Dade	2014	Ride	489
Miami-Dade	2014	Ride	5
Miami-Dade	2014	Ride	5
Miami-Dade	2014	Ride	4
Miami-Dade	2014	Ride	6
Miami-Dade	2014	Ride	8
Miami-Dade	2014	Ride	8
Miami-Dade	2014	Ride	9
Miami-Dade	2014	Ride	1
Miami-Dade	2014	Ride	8
Miami-Dade	2014	Ride	1
Miami-Dade	2014	Ride	134
Miami-Dade	2014	Ride	2
Miami-Dade	2014	Ride	2
Miami-Dade	2014	Ride	2
Miami-Dade	2014	Ride	477
Miami-Dade	2014	Ride	8
Miami-Dade	2014	Ride	2
Miami-Dade	2014	Ride	1
Miami-Dade	2014	Ride	2
Miami-Dade	2014	Ride	3
Miami-Dade	2014	Ride	9
Miami-Dade	2014	Ride	2
Miami-Dade	2014	Ride	6
Miami-Dade	2014	Ride	2
Miami-Dade	2014	Ride	1
Miami-Dade	2014	Ride	472
Miami-Dade	2014	Ride	1
Miami-Dade	2014	Ride	10
Miami-Dade	2014	Ride	2
Miami-Dade	2014	Ride	465
Miami-Dade	2014	Ride	6

CNTYNM	YEAR	MODE	TACTCNT
Miami-Dade	2014	Ride	2
Miami-Dade	2014	Ride	2
Miami-Dade	2014	Ride	11
Miami-Dade	2014	Ride	22
Miami-Dade	2014	Ride	476
Miami-Dade	2014	Ride	11
Miami-Dade	2014	Ride	488
Miami-Dade	2014	Ride	722
Miami-Dade	2014	Ride	453
Miami-Dade	2014	Ride	634
Miami-Dade	2014	Ride	483
Miami-Dade	2014	Ride	508
Miami-Dade	2014	Ride	962
Miami-Dade	2014	Ride	4
Miami-Dade	2014	Ride	956
Miami-Dade	2014	Ride	11
Miami-Dade	2014	Ride	918
Miami-Dade	2014	Ride	216
Miami-Dade	2014	Ride	206
Miami-Dade	2014	Ride	208
Miami-Dade	2014	Ride	98
Miami-Dade	2014	Ride	93
Miami-Dade	2014	Ride	92
Miami-Dade	2014	Ride	94
Miami-Dade	2014	Ride	95
Miami-Dade	2014	Ride	1
Miami-Dade	2014	Ride	92
Miami-Dade	2014	Ride	96
Miami-Dade	2014	Ride	95
Miami-Dade	2014	Ride	1
Miami-Dade	2014	Ride	193
Miami-Dade	2014	Ride	87
Miami-Dade	2014	Ride	3
Miami-Dade	2014	Ride	17
Miami-Dade	2014	Ride	9
Miami-Dade	2014	Ride	9
Miami-Dade	2014	Ride	693
Miami-Dade	2014	Ride	13
Miami-Dade	2014	Ride	25
Miami-Dade	2014	Ride	13
Miami-Dade	2014	Ride	111
Miami-Dade	2014	Ride	71
Miami-Dade	2014	Ride	15
Miami-Dade	2014	Ride	617
Miami-Dade	2014	Ride	227
Miami-Dade	2014	Ride	194
Miami-Dade	2014	Ride	289
Miami-Dade	2014	Ride	658
Miami-Dade	2014	Ride	158
Miami-Dade	2014	Ride	149
Miami-Dade	2014	Ride	288

CNTYNM	YEAR	MODE	TACTCNT
Miami-Dade	2014	Ride	39
Miami-Dade	2014	Ride	50
Miami-Dade	2014	Ride	2
Miami-Dade	2014	Ride	6
Miami-Dade	2014	Ride	6
Miami-Dade	2014	Ride	14
Miami-Dade	2014	Ride	39
Miami-Dade	2014	Ride	37
Miami-Dade	2014	Ride	22
Miami-Dade	2014	Ride	4
Miami-Dade	2014	Ride	10
Miami-Dade	2014	Ride	1
Miami-Dade	2014	Ride	19
Miami-Dade	2014	Ride	6
Miami-Dade	2014	Ride	2
Miami-Dade	2014	Ride	1
Miami-Dade	2014	Ride	1
Miami-Dade	2014	Ride	5
Miami-Dade	2014	Ride	2
Miami-Dade	2014	Ride	1
Miami-Dade	2014	Ride	1
Miami-Dade	2014	Ride	10
Miami-Dade	2014	Ride	6
Miami-Dade	2014	Ride	3
Miami-Dade	2014	Ride	10
Miami-Dade	2014	Ride	1
Miami-Dade	2014	Ride	4
Miami-Dade	2014	Ride	4
Miami-Dade	2014	Ride	2
Miami-Dade	2014	Ride	8
Miami-Dade	2014	Ride	1
Miami-Dade	2014	Ride	312
Miami-Dade	2014	Ride	3
Miami-Dade	2014	Ride	3
Miami-Dade	2014	Ride	6
Miami-Dade	2014	Ride	9
Miami-Dade	2014	Ride	1
Miami-Dade	2014	Ride	4
Miami-Dade	2014	Ride	1
Miami-Dade	2014	Ride	2
Miami-Dade	2014	Ride	2
Miami-Dade	2014	Ride	103
Miami-Dade	2014	Ride	103
Miami-Dade	2014	Ride	5
Miami-Dade	2014	Ride	153
Miami-Dade	2014	Ride	1
Miami-Dade	2014	Ride	1
Miami-Dade	2014	Ride	1
Miami-Dade	2014	Ride	116
Miami-Dade	2014	Ride	139
Miami-Dade	2014	Ride	131

CNTYNM	YEAR	MODE	TACTCNT
Miami-Dade	2014	Ride	128
Miami-Dade	2014	Ride	138
Miami-Dade	2014	Ride	95
Miami-Dade	2014	Ride	93
Miami-Dade	2014	Ride	98
Miami-Dade	2014	Ride	101
Miami-Dade	2014	Ride	103
Miami-Dade	2014	Ride	95
Miami-Dade	2014	Ride	26
Miami-Dade	2014	Ride	96
Miami-Dade	2014	Ride	99
Miami-Dade	2014	Ride	89
Miami-Dade	2014	Ride	77
Miami-Dade	2014	Ride	91
Miami-Dade	2014	Ride	84
Miami-Dade	2014	Ride	98
Miami-Dade	2014	Ride	116
Miami-Dade	2014	Ride	91
Miami-Dade	2014	Ride	87
Miami-Dade	2014	Ride	285
Miami-Dade	2014	Ride	11
Miami-Dade	2014	Ride	11
Miami-Dade	2014	Ride	226
Miami-Dade	2014	Ride	33
Miami-Dade	2014	Ride	21
Miami-Dade	2014	Ride	181
Miami-Dade	2014	Ride	181
Miami-Dade	2014	Ride	163
Miami-Dade	2014	Ride	165
Miami-Dade	2014	Ride	185
Miami-Dade	2014	Ride	170
Miami-Dade	2014	Ride	193
Miami-Dade	2014	Ride	172
Miami-Dade	2014	Ride	264
Miami-Dade	2014	Ride	251
Miami-Dade	2014	Ride	32
Miami-Dade	2014	Ride	59
Miami-Dade	2014	Ride	62
Miami-Dade	2014	Ride	205
Miami-Dade	2014	Ride	196
Miami-Dade	2014	Ride	177
Miami-Dade	2014	Ride	113
Miami-Dade	2014	Ride	111
Miami-Dade	2014	Ride	191
Miami-Dade	2014	Ride	148
Miami-Dade	2014	Ride	152
Miami-Dade	2014	Ride	165
Miami-Dade	2014	Ride	200
Miami-Dade	2014	Ride	166
Miami-Dade	2014	Ride	176
Miami-Dade	2014	Ride	152

CNTYNM	YEAR	MODE	TACTCNT
Miami-Dade	2014	Ride	194
Miami-Dade	2014	Ride	1425
Miami-Dade	2014	Ride	1444
Miami-Dade	2014	Ride	1401
Miami-Dade	2014	Ride	1407
Miami-Dade	2014	Ride	1327
Miami-Dade	2014	Ride	1330
Miami-Dade	2014	Ride	1310
Miami-Dade	2014	Ride	1342
Miami-Dade	2014	Ride	1344
Miami-Dade	2014	Ride	1306
Miami-Dade	2014	Ride	1386
Miami-Dade	2014	Ride	1407
Miami-Dade	2014	Ride	1634
Miami-Dade	2014	Ride	1443
Miami-Dade	2014	Ride	1400
Miami-Dade	2014	Ride	1329
Miami-Dade	2014	Ride	1437
Miami-Dade	2014	Ride	1290
Miami-Dade	2014	Ride	1427
Miami-Dade	2014	Ride	1413
Miami-Dade	2014	Ride	1428
Miami-Dade	2014	Ride	1527
Miami-Dade	2014	Ride	1422
Miami-Dade	2014	Ride	1308
Miami-Dade	2014	Ride	1429
Miami-Dade	2014	Ride	529
Miami-Dade	2014	Ride	516
Miami-Dade	2014	Ride	491
Miami-Dade	2014	Ride	500
Miami-Dade	2014	Ride	523
Miami-Dade	2014	Ride	638
Miami-Dade	2014	Ride	570
Miami-Dade	2014	Ride	307
Miami-Dade	2014	Ride	283
Miami-Dade	2014	Ride	261
Miami-Dade	2014	Ride	295
Miami-Dade	2014	Ride	237
Miami-Dade	2014	Ride	278
Miami-Dade	2014	Ride	293
Miami-Dade	2014	Ride	44
Miami-Dade	2014	Ride	19
Miami-Dade	2014	Ride	31
Miami-Dade	2014	Ride	22
Miami-Dade	2014	Ride	26
Miami-Dade	2014	Ride	29
Miami-Dade	2014	Ride	28
Miami-Dade	2014	Ride	18
Miami-Dade	2014	Ride	27
Miami-Dade	2014	Ride	32
Miami-Dade	2014	Ride	238

CNTYNM	YEAR	MODE	TACTCNT
Miami-Dade	2014	Ride	217
Miami-Dade	2014	Ride	57
Miami-Dade	2014	Ride	65
Miami-Dade	2014	Ride	1
Miami-Dade	2014	Ride	59
Miami-Dade	2014	Ride	60
Miami-Dade	2014	Ride	734
Miami-Dade	2014	Ride	9
Miami-Dade	2014	Ride	1
Miami-Dade	2014	Ride	138
Miami-Dade	2014	Ride	1
Miami-Dade	2014	Ride	1
Miami-Dade	2014	Ride	151
Miami-Dade	2014	Ride	1
Miami-Dade	2014	Ride	5
Miami-Dade	2014	Ride	5
Miami-Dade	2014	Ride	6
Miami-Dade	2014	Ride	6
Miami-Dade	2014	Ride	5
Miami-Dade	2014	Ride	1
Miami-Dade	2014	Ride	1
Miami-Dade	2014	Ride	2
Miami-Dade	2014	Ride	313
Miami-Dade	2014	Ride	302
Miami-Dade	2014	Ride	1
Miami-Dade	2014	Ride	307
Miami-Dade	2014	Ride	808
Miami-Dade	2014	Ride	240
Miami-Dade	2014	Ride	315
Miami-Dade	2014	Ride	127
Miami-Dade	2014	Ride	127
Miami-Dade	2014	Ride	685
Miami-Dade	2014	Ride	605
Miami-Dade	2014	Ride	1
Miami-Dade	2014	Ride	521
Miami-Dade	2014	Ride	147
Miami-Dade	2014	Ride	274
Miami-Dade	2014	Ride	509
Miami-Dade	2014	Ride	533
Miami-Dade	2014	Ride	17
Miami-Dade	2014	Ride	42
Miami-Dade	2014	Ride	46
Miami-Dade	2014	Ride	48
Miami-Dade	2014	Ride	36
Miami-Dade	2014	Ride	34
Miami-Dade	2014	Ride	42
Miami-Dade	2014	Ride	12
Miami-Dade	2014	Ride	23
Miami-Dade	2014	Ride	65
Miami-Dade	2014	Ride	70
Miami-Dade	2014	Ride	63

CNTYNM	YEAR	MODE	TACTCNT
Miami-Dade	2014	Ride	68
Miami-Dade	2014	Ride	19
Miami-Dade	2014	Ride	7
Miami-Dade	2014	Ride	72
Miami-Dade	2014	Ride	64
Miami-Dade	2014	Ride	57
Miami-Dade	2014	Ride	69
Miami-Dade	2014	Ride	61
Miami-Dade	2014	Ride	61
Miami-Dade	2014	Ride	68
Miami-Dade	2014	Ride	67
Miami-Dade	2014	Ride	6
Miami-Dade	2014	Ride	73
Miami-Dade	2014	Ride	71
Miami-Dade	2014	Ride	74
Miami-Dade	2014	Ride	73
Miami-Dade	2014	Ride	69
Miami-Dade	2014	Ride	66
Miami-Dade	2014	Ride	74
Miami-Dade	2014	Ride	67
Miami-Dade	2014	Ride	67
Miami-Dade	2014	Ride	81
Miami-Dade	2014	Ride	238
Miami-Dade	2014	Ride	61
Miami-Dade	2014	Ride	818
Miami-Dade	2014	Ride	157
Miami-Dade	2014	Ride	133
Miami-Dade	2014	Ride	135
Miami-Dade	2014	Ride	40
Miami-Dade	2014	Ride	36
Miami-Dade	2014	Ride	35
Miami-Dade	2014	Ride	462
Miami-Dade	2014	Ride	465
Miami-Dade	2014	Ride	69
Miami-Dade	2014	Ride	74
Miami-Dade	2014	Ride	110
Miami-Dade	2014	Ride	85
Miami-Dade	2014	Ride	80
Miami-Dade	2014	Ride	864
Miami-Dade	2014	Ride	1379
Miami-Dade	2014	Ride	1375
Miami-Dade	2014	Ride	1304
Miami-Dade	2014	Ride	25
Miami-Dade	2014	Ride	27
Miami-Dade	2014	Ride	29
Miami-Dade	2014	Ride	555
Miami-Dade	2014	Ride	546
Miami-Dade	2014	Ride	7
Miami-Dade	2014	Ride	7
Miami-Dade	2014	Ride	163
Miami-Dade	2014	Ride	153

CNTYNM	YEAR	MODE	TACTCNT
Miami-Dade	2014	Ride	390
Miami-Dade	2014	Ride	663
Miami-Dade	2014	Ride	629
Miami-Dade	2014	Ride	605
Miami-Dade	2014	Ride	524
Miami-Dade	2014	Ride	1
Miami-Dade	2014	Ride	9
Miami-Dade	2014	Ride	9
Miami-Dade	2014	Ride	1
Miami-Dade	2014	Ride	348
Miami-Dade	2014	Ride	256
Miami-Dade	2014	Ride	271
Miami-Dade	2014	Ride	269
Miami-Dade	2014	Ride	607
Miami-Dade	2014	Ride	186
Miami-Dade	2014	Ride	32
Miami-Dade	2014	Ride	36
Miami-Dade	2014	Ride	80
Miami-Dade	2014	Ride	85
Miami-Dade	2014	Ride	84
Miami-Dade	2014	Ride	96
Miami-Dade	2014	Ride	95
Miami-Dade	2014	Ride	145
Miami-Dade	2014	Ride	121
Miami-Dade	2014	Ride	119
Miami-Dade	2014	Ride	83
Miami-Dade	2014	Ride	84
Miami-Dade	2014	Ride	102
Miami-Dade	2014	Ride	107
Miami-Dade	2014	Ride	89
Miami-Dade	2014	Ride	91
Miami-Dade	2014	Ride	398
Miami-Dade	2014	Ride	401
Miami-Dade	2014	Ride	401
Miami-Dade	2014	Ride	133
Miami-Dade	2014	Ride	138
Miami-Dade	2014	Ride	138
Miami-Dade	2014	Ride	140
Miami-Dade	2014	Ride	315
Miami-Dade	2014	Ride	309
Miami-Dade	2014	Ride	306
Miami-Dade	2014	Ride	120
Miami-Dade	2014	Ride	128
Miami-Dade	2014	Ride	161
Miami-Dade	2014	Ride	141
Miami-Dade	2014	Ride	219
Miami-Dade	2014	Ride	204
Miami-Dade	2014	Ride	155
Miami-Dade	2014	Ride	173
Miami-Dade	2014	Ride	515
Miami-Dade	2014	Ride	530

CNTYNM	YEAR	MODE	TACTCNT
Miami-Dade	2014	Ride	183
Miami-Dade	2014	Ride	168
Miami-Dade	2014	Ride	1280
Miami-Dade	2014	Ride	1323
Miami-Dade	2014	Ride	613
Miami-Dade	2014	Ride	604
Miami-Dade	2014	Ride	1342
Miami-Dade	2014	Ride	1331
Miami-Dade	2014	Ride	357
Miami-Dade	2014	Ride	188
Miami-Dade	2014	Ride	180
Miami-Dade	2014	Ride	269
Miami-Dade	2014	Ride	995
Miami-Dade	2014	Ride	1030
Miami-Dade	2014	Ride	537
Miami-Dade	2014	Ride	517
Miami-Dade	2014	Ride	692
Miami-Dade	2014	Ride	504
Miami-Dade	2014	Ride	863
Miami-Dade	2014	Ride	560
Miami-Dade	2014	Ride	534
Miami-Dade	2014	Ride	539
Miami-Dade	2014	Ride	557
Miami-Dade	2014	Ride	546
Miami-Dade	2014	Ride	249
Miami-Dade	2014	Ride	259
Miami-Dade	2014	Ride	314
Miami-Dade	2014	Ride	312
Miami-Dade	2014	Ride	14
Miami-Dade	2014	Ride	44
Miami-Dade	2014	Ride	332
Miami-Dade	2014	Ride	399
Miami-Dade	2014	Ride	176
Miami-Dade	2014	Ride	218
Miami-Dade	2014	Ride	246
Miami-Dade	2014	Ride	224
Miami-Dade	2014	Ride	288
Miami-Dade	2014	Ride	32
Miami-Dade	2014	Ride	31
Miami-Dade	2014	Ride	82
Miami-Dade	2014	Ride	83
Miami-Dade	2014	Ride	117
Miami-Dade	2014	Ride	117
Miami-Dade	2014	Ride	5
Miami-Dade	2014	Ride	5
Miami-Dade	2014	Ride	71
Miami-Dade	2014	Ride	87
Miami-Dade	2014	Ride	85
Miami-Dade	2014	Ride	33
Miami-Dade	2014	Ride	96
Miami-Dade	2014	Ride	149

CNTYNM	YEAR	MODE	TACTCNT
Miami-Dade	2014	Ride	149
Miami-Dade	2014	Ride	148
Miami-Dade	2014	Ride	67
Miami-Dade	2014	Ride	64
Miami-Dade	2014	Ride	72
Miami-Dade	2014	Ride	78
Miami-Dade	2014	Ride	73
Miami-Dade	2014	Ride	71
Miami-Dade	2014	Ride	51
Miami-Dade	2014	Ride	50
Miami-Dade	2014	Ride	85
Miami-Dade	2014	Ride	60
Miami-Dade	2014	Ride	85
Miami-Dade	2014	Ride	273
Miami-Dade	2014	Ride	255
Miami-Dade	2014	Ride	254
Miami-Dade	2014	Ride	4
Miami-Dade	2014	Ride	1150
Miami-Dade	2014	Ride	48
Miami-Dade	2014	Ride	103
Miami-Dade	2014	Ride	103
Miami-Dade	2014	Ride	724
Miami-Dade	2014	Ride	728
Miami-Dade	2014	Ride	737
Miami-Dade	2014	Ride	9
Miami-Dade	2014	Ride	6
Miami-Dade	2014	Ride	23
Miami-Dade	2014	Ride	23
Miami-Dade	2014	Ride	19
Miami-Dade	2014	Ride	19
Miami-Dade	2014	Ride	222
Miami-Dade	2014	Ride	215
Miami-Dade	2014	Ride	222
Miami-Dade	2014	Ride	160
Miami-Dade	2014	Ride	18
Miami-Dade	2014	Ride	28
Miami-Dade	2014	Ride	14
Miami-Dade	2014	Ride	36
Miami-Dade	2014	Ride	28
Miami-Dade	2014	Ride	24
Miami-Dade	2014	Ride	149
Miami-Dade	2014	Ride	24
Miami-Dade	2014	Ride	14
Miami-Dade	2014	Ride	18
Miami-Dade	2014	Ride	27
Miami-Dade	2014	Ride	14
Miami-Dade	2014	Ride	26
Miami-Dade	2014	Ride	18
Miami-Dade	2014	Ride	27
Miami-Dade	2014	Ride	26
Miami-Dade	2014	Ride	33

CNTYNM	YEAR	MODE	TACTCNT
Miami-Dade	2014	Ride	16
Miami-Dade	2014	Ride	24
Miami-Dade	2014	Ride	34
Miami-Dade	2014	Ride	23
Miami-Dade	2014	Ride	63
Miami-Dade	2014	Ride	15
Miami-Dade	2014	Ride	44
Miami-Dade	2014	Ride	25
Miami-Dade	2014	Ride	36
Miami-Dade	2014	Ride	16
Miami-Dade	2014	Ride	17
Miami-Dade	2014	Ride	32
Miami-Dade	2014	Ride	3
Miami-Dade	2014	Ride	9
Miami-Dade	2014	Ride	35
Miami-Dade	2014	Ride	37
Miami-Dade	2014	Ride	15
Miami-Dade	2014	Ride	17
Miami-Dade	2014	Ride	8
Miami-Dade	2014	Ride	12
Miami-Dade	2014	Ride	1
Miami-Dade	2014	Ride	12
Miami-Dade	2014	Ride	16
Miami-Dade	2014	Ride	16
Miami-Dade	2014	Ride	17
Miami-Dade	2014	Ride	17
Miami-Dade	2014	Ride	19
Miami-Dade	2014	Ride	19
Miami-Dade	2014	Ride	19
Miami-Dade	2014	Ride	17
Miami-Dade	2014	Ride	12
Miami-Dade	2014	Ride	4
Miami-Dade	2014	Ride	12
Miami-Dade	2014	Ride	19
Miami-Dade	2014	Ride	18
Miami-Dade	2014	Ride	12
Miami-Dade	2014	Ride	11
Miami-Dade	2014	Ride	35
Miami-Dade	2014	Ride	27
Miami-Dade	2014	Ride	12
Miami-Dade	2014	Ride	9
Miami-Dade	2014	Ride	34
Miami-Dade	2014	Ride	21
Miami-Dade	2014	Ride	2
Miami-Dade	2014	Ride	2
Miami-Dade	2014	Ride	2
Miami-Dade	2014	Ride	3
Miami-Dade	2014	Ride	3
Miami-Dade	2014	Ride	4
Miami-Dade	2014	Ride	5
Miami-Dade	2014	Ride	5

CNTYNM	YEAR	MODE	TACTCNT
Miami-Dade	2014	Ride	4
Miami-Dade	2014	Ride	4
Miami-Dade	2014	Ride	4
Miami-Dade	2014	Ride	4
Miami-Dade	2014	Ride	4
Miami-Dade	2014	Ride	4
Miami-Dade	2014	Ride	5
Miami-Dade	2014	Ride	4
Miami-Dade	2014	Ride	2
Miami-Dade	2014	Ride	2
Miami-Dade	2014	Ride	2
Miami-Dade	2014	Ride	2
Miami-Dade	2014	Ride	4
Miami-Dade	2014	Ride	3
Miami-Dade	2014	Ride	196
Miami-Dade	2014	Ride	151
Miami-Dade	2014	Ride	9
Miami-Dade	2014	Ride	6
Miami-Dade	2014	Ride	4
Miami-Dade	2014	Ride	28
Miami-Dade	2014	Ride	5
Miami-Dade	2014	Ride	8
Miami-Dade	2014	Ride	10
Miami-Dade	2014	Ride	9
Miami-Dade	2014	Ride	10
Miami-Dade	2014	Ride	9
Miami-Dade	2014	Ride	19
Miami-Dade	2014	Ride	9
Miami-Dade	2014	Ride	1111
Miami-Dade	2014	Ride	891
Miami-Dade	2014	Ride	91
Miami-Dade	2014	Ride	86
Miami-Dade	2014	Ride	3
Miami-Dade	2014	Ride	111
Miami-Dade	2014	Ride	112
Miami-Dade	2014	Ride	150
Miami-Dade	2014	Ride	140
Miami-Dade	2014	Ride	2
Miami-Dade	2014	Ride	3
Miami-Dade	2014	Ride	2
Miami-Dade	2014	Ride	2
Miami-Dade	2014	Ride	40
Miami-Dade	2014	Ride	36
Miami-Dade	2014	Ride	1
Miami-Dade	2014	Ride	1
Miami-Dade	2014	Ride	1
Miami-Dade	2014	Ride	116
Miami-Dade	2014	Ride	111
Miami-Dade	2014	Ride	120
Miami-Dade	2014	Ride	116
Miami-Dade	2014	Ride	112

CNTYNM	YEAR	MODE	TACTCNT
Miami-Dade	2014	Ride	113
Miami-Dade	2014	Ride	120
Miami-Dade	2014	Ride	114
Miami-Dade	2014	Ride	89
Miami-Dade	2014	Ride	79
Miami-Dade	2014	Ride	90
Miami-Dade	2014	Ride	1404
Miami-Dade	2014	Ride	1369
Miami-Dade	2014	Ride	1348
Miami-Dade	2014	Ride	1312
Miami-Dade	2014	Ride	1457
Miami-Dade	2014	Ride	1332
Miami-Dade	2014	Ride	1360
Miami-Dade	2014	Ride	1330
Miami-Dade	2014	Ride	1323
Miami-Dade	2014	Ride	1432
Miami-Dade	2014	Ride	274
Miami-Dade	2014	Ride	813
Miami-Dade	2014	Ride	213
Miami-Dade	2014	Ride	260
Miami-Dade	2014	Ride	227
Miami-Dade	2014	Ride	243
Miami-Dade	2014	Ride	280
Miami-Dade	2014	Ride	292
Miami-Dade	2014	Ride	290
Miami-Dade	2014	Ride	191
Miami-Dade	2014	Ride	221
Miami-Dade	2014	Ride	206
Miami-Dade	2014	Ride	255
Miami-Dade	2014	Ride	218
Miami-Dade	2014	Ride	218
Miami-Dade	2014	Ride	190
Miami-Dade	2014	Ride	212
Miami-Dade	2014	Ride	125
Miami-Dade	2014	Ride	11
Miami-Dade	2014	Ride	11
Miami-Dade	2014	Ride	1
Miami-Dade	2014	Ride	2
Miami-Dade	2014	Ride	10
Miami-Dade	2014	Ride	6
Miami-Dade	2014	Ride	7
Miami-Dade	2014	Ride	643
Miami-Dade	2014	Ride	832
Miami-Dade	2014	Ride	610
Miami-Dade	2014	Ride	845
Miami-Dade	2014	Ride	656
Miami-Dade	2014	Ride	706
Miami-Dade	2014	Ride	291
Miami-Dade	2014	Ride	287
Miami-Dade	2014	Ride	383
Miami-Dade	2014	Ride	14

CNTYNM	YEAR	MODE	TACTCNT
Miami-Dade	2014	Ride	12
Miami-Dade	2014	Ride	12
Miami-Dade	2014	Ride	3
Miami-Dade	2014	Ride	4
Miami-Dade	2014	Ride	12
Miami-Dade	2014	Ride	199
Miami-Dade	2014	Ride	1
Miami-Dade	2014	Ride	233
Miami-Dade	2014	Ride	178
Miami-Dade	2014	Ride	5
Miami-Dade	2014	Ride	7
Miami-Dade	2014	Ride	59
Miami-Dade	2014	Ride	37
Miami-Dade	2014	Ride	2
Miami-Dade	2014	Ride	816
Miami-Dade	2014	Ride	645
Miami-Dade	2014	Ride	38
Miami-Dade	2014	Ride	38
Miami-Dade	2014	Ride	14
Miami-Dade	2014	Ride	14
Miami-Dade	2014	Ride	816
Miami-Dade	2014	Ride	15
Miami-Dade	2014	Ride	14
Miami-Dade	2014	Ride	37
Miami-Dade	2014	Ride	28
Miami-Dade	2014	Ride	11
Miami-Dade	2014	Ride	19
Miami-Dade	2014	Ride	40
Miami-Dade	2014	Ride	11
Miami-Dade	2014	Ride	31
Miami-Dade	2014	Ride	33
Miami-Dade	2014	Ride	11
Miami-Dade	2014	Ride	13
Miami-Dade	2014	Ride	4
Miami-Dade	2014	Ride	15
Miami-Dade	2014	Ride	3
Miami-Dade	2014	Ride	4
Miami-Dade	2014	Ride	42
Miami-Dade	2014	Ride	1
Miami-Dade	2014	Ride	570
Miami-Dade	2014	Ride	1
Miami-Dade	2014	Ride	41
Miami-Dade	2014	Ride	22
Miami-Dade	2014	Ride	22
Miami-Dade	2014	Ride	25
Miami-Dade	2014	Ride	1
Miami-Dade	2014	Ride	1
Miami-Dade	2014	Ride	29
Miami-Dade	2014	Ride	1
Miami-Dade	2014	Ride	16
Miami-Dade	2014	Ride	1

CNTYNM	YEAR	MODE	TACTCNT
Miami-Dade	2014	Ride	17
Miami-Dade	2014	Ride	44
Miami-Dade	2014	Ride	1
Miami-Dade	2014	Ride	496
Miami-Dade	2014	Ride	65
Miami-Dade	2014	Ride	34
Miami-Dade	2014	Ride	27
Miami-Dade	2014	Ride	471
Miami-Dade	2014	Ride	11
Miami-Dade	2014	Ride	1183
Miami-Dade	2014	Ride	198
Miami-Dade	2014	Ride	414
Miami-Dade	2014	Ride	859
Miami-Dade	2014	Ride	982
Miami-Dade	2014	Ride	182
Miami-Dade	2014	Ride	201
Miami-Dade	2014	Ride	1275
Miami-Dade	2014	Ride	1313
Miami-Dade	2014	Ride	155
Miami-Dade	2014	Ride	160
Miami-Dade	2014	Ride	163
Miami-Dade	2014	Ride	156
Miami-Dade	2014	Ride	138
Miami-Dade	2014	Ride	128
Miami-Dade	2014	Ride	17
Miami-Dade	2014	Ride	18
Miami-Dade	2014	Ride	37
Miami-Dade	2014	Ride	87
Miami-Dade	2014	Ride	97
Miami-Dade	2014	Ride	561
Miami-Dade	2014	Ride	125
Miami-Dade	2014	Ride	123
Miami-Dade	2014	Ride	71
Miami-Dade	2014	Ride	68
Miami-Dade	2014	Ride	47
Miami-Dade	2014	Ride	45
Miami-Dade	2014	Ride	23
Miami-Dade	2014	Ride	23
Miami-Dade	2014	Ride	38
Miami-Dade	2014	Ride	39
Miami-Dade	2014	Ride	46
Miami-Dade	2014	Ride	47
Miami-Dade	2014	Ride	1360
Miami-Dade	2014	Ride	1347
Miami-Dade	2014	Ride	2
Miami-Dade	2014	Ride	2
Miami-Dade	2014	Ride	1412
Miami-Dade	2014	Ride	1377
Miami-Dade	2014	Ride	3
Miami-Dade	2014	Ride	3
Miami-Dade	2014	Ride	159

CNTYNM	YEAR	MODE	TACTCNT
Miami-Dade	2014	Ride	102
Miami-Dade	2014	Ride	97
Miami-Dade	2014	Ride	121
Miami-Dade	2014	Ride	124
Miami-Dade	2014	Ride	950
Miami-Dade	2014	Ride	91
Miami-Dade	2014	Ride	6
Miami-Dade	2014	Ride	6
Miami-Dade	2014	Ride	109
Miami-Dade	2014	Ride	120
Miami-Dade	2014	Ride	9
Miami-Dade	2014	Ride	9
Miami-Dade	2014	Ride	178
Miami-Dade	2014	Ride	167
Miami-Dade	2014	Ride	483
Miami-Dade	2014	Ride	492
Miami-Dade	2014	Ride	536
Miami-Dade	2014	Ride	130
Miami-Dade	2014	Ride	208
Miami-Dade	2014	Ride	96
Miami-Dade	2014	Ride	97
Miami-Dade	2014	Ride	116
Miami-Dade	2014	Ride	119
Miami-Dade	2014	Ride	139
Miami-Dade	2014	Ride	148
Miami-Dade	2014	Ride	11
Miami-Dade	2014	Ride	11
Miami-Dade	2014	Ride	1
Miami-Dade	2014	Ride	1
Miami-Dade	2014	Ride	249
Miami-Dade	2014	Ride	82
Miami-Dade	2014	Ride	780
Miami-Dade	2014	Ride	46
Miami-Dade	2014	Ride	64
Miami-Dade	2014	Ride	777
Miami-Dade	2014	Ride	762
Miami-Dade	2014	Ride	12
Miami-Dade	2014	Ride	630
Miami-Dade	2014	Ride	629
Miami-Dade	2014	Ride	642
Miami-Dade	2014	Ride	4
Miami-Dade	2014	Ride	3
Miami-Dade	2014	Ride	3
Miami-Dade	2014	Ride	7
Miami-Dade	2014	Ride	145
Miami-Dade	2014	Ride	122
Miami-Dade	2014	Ride	180
Miami-Dade	2014	Ride	175
Miami-Dade	2014	Ride	7
Miami-Dade	2014	Ride	7
Miami-Dade	2014	Ride	124

CNTYNM	YEAR	MODE	TACTCNT
Miami-Dade	2014	Ride	8
Miami-Dade	2014	Ride	8
Miami-Dade	2014	Ride	11
Miami-Dade	2014	Ride	11
Miami-Dade	2014	Ride	45
Miami-Dade	2014	Ride	48
Miami-Dade	2014	Ride	43
Miami-Dade	2014	Ride	47
Miami-Dade	2014	Ride	42
Miami-Dade	2014	Ride	86
Miami-Dade	2014	Ride	4
Miami-Dade	2014	Ride	4
Miami-Dade	2014	Ride	4
Miami-Dade	2014	Ride	6
Miami-Dade	2014	Ride	107
Miami-Dade	2014	Ride	7
Miami-Dade	2014	Ride	6
Miami-Dade	2014	Ride	2
Miami-Dade	2014	Ride	2
Miami-Dade	2014	Ride	2
Miami-Dade	2014	Ride	4
Miami-Dade	2014	Ride	3
Miami-Dade	2014	Ride	5
Miami-Dade	2014	Ride	4
Miami-Dade	2014	Ride	2
Miami-Dade	2014	Ride	2
Miami-Dade	2014	Ride	1
Miami-Dade	2014	Ride	4
Miami-Dade	2014	Ride	5
Miami-Dade	2014	Ride	55
Miami-Dade	2014	Ride	6
Miami-Dade	2014	Ride	53
Miami-Dade	2014	Ride	7
Miami-Dade	2014	Ride	49
Miami-Dade	2014	Ride	4
Miami-Dade	2014	Ride	1
Miami-Dade	2014	Ride	55
Miami-Dade	2014	Ride	7
Miami-Dade	2014	Ride	5
Miami-Dade	2014	Ride	3
Miami-Dade	2014	Ride	5
Miami-Dade	2014	Ride	1
Miami-Dade	2014	Ride	2
Miami-Dade	2014	Ride	2
Miami-Dade	2014	Ride	2
Miami-Dade	2014	Ride	3
Miami-Dade	2014	Ride	3
Miami-Dade	2014	Ride	3
Miami-Dade	2014	Ride	40
Miami-Dade	2014	Ride	6
Miami-Dade	2014	Ride	42

CNTYNM	YEAR	MODE	TACTCNT
Miami-Dade	2014	Ride	35
Miami-Dade	2014	Ride	51
Miami-Dade	2014	Ride	90
Miami-Dade	2014	Ride	4
Miami-Dade	2014	Ride	4
Miami-Dade	2014	Ride	13
Miami-Dade	2014	Ride	7
Miami-Dade	2014	Ride	1
Miami-Dade	2014	Ride	177
Miami-Dade	2014	Ride	169
Miami-Dade	2014	Ride	117
Miami-Dade	2014	Ride	164
Miami-Dade	2014	Ride	148
Miami-Dade	2014	Ride	176
Miami-Dade	2014	Ride	177
Miami-Dade	2014	Ride	159
Miami-Dade	2014	Ride	178
Miami-Dade	2014	Ride	180
Miami-Dade	2014	Ride	174
Miami-Dade	2014	Ride	98
Miami-Dade	2014	Ride	167
Miami-Dade	2014	Ride	142
Miami-Dade	2014	Ride	75
Miami-Dade	2014	Ride	72
Miami-Dade	2014	Ride	39
Miami-Dade	2014	Ride	15
Miami-Dade	2014	Ride	6
Miami-Dade	2014	Ride	176
Miami-Dade	2014	Ride	182
Miami-Dade	2014	Ride	170
Miami-Dade	2014	Ride	166
Miami-Dade	2014	Ride	5
Miami-Dade	2014	Ride	2
Miami-Dade	2014	Ride	250
Miami-Dade	2014	Ride	148
Miami-Dade	2014	Ride	136
Miami-Dade	2014	Ride	136
Miami-Dade	2014	Ride	131
Miami-Dade	2014	Ride	206
Miami-Dade	2014	Ride	128
Miami-Dade	2014	Ride	187
Miami-Dade	2014	Ride	62
Miami-Dade	2014	Ride	5
Miami-Dade	2014	Ride	2
Miami-Dade	2014	Ride	1
Miami-Dade	2014	Ride	170
Miami-Dade	2014	Ride	178
Miami-Dade	2014	Ride	2
Miami-Dade	2014	Ride	2
Miami-Dade	2014	Ride	3
Miami-Dade	2014	Ride	2

CNTYNM	YEAR	MODE	TACTCNT
Miami-Dade	2014	Ride	4
Miami-Dade	2014	Ride	8
Miami-Dade	2014	Ride	3
Miami-Dade	2014	Ride	5
Miami-Dade	2014	Ride	238
Miami-Dade	2014	Ride	223
Miami-Dade	2014	Ride	207
Miami-Dade	2014	Ride	9
Miami-Dade	2014	Ride	7
Miami-Dade	2014	Ride	13
Miami-Dade	2014	Ride	3
Miami-Dade	2014	Ride	3
Miami-Dade	2014	Ride	8
Miami-Dade	2014	Ride	8
Miami-Dade	2014	Ride	2
Miami-Dade	2014	Ride	1
Miami-Dade	2014	Ride	179
Miami-Dade	2014	Ride	3
Miami-Dade	2014	Ride	3
Miami-Dade	2014	Ride	66
Miami-Dade	2014	Ride	15
Miami-Dade	2014	Ride	3
Miami-Dade	2014	Ride	3
Miami-Dade	2014	Ride	27
Miami-Dade	2014	Ride	24
Miami-Dade	2014	Ride	12
Miami-Dade	2014	Ride	1
Miami-Dade	2014	Ride	1
Miami-Dade	2014	Ride	1
Miami-Dade	2014	Ride	1
Miami-Dade	2014	Ride	1
Miami-Dade	2014	Ride	8
Miami-Dade	2014	Ride	1
Miami-Dade	2014	Ride	1
Miami-Dade	2014	Ride	11
Miami-Dade	2014	Ride	1
Miami-Dade	2014	Ride	1
Miami-Dade	2014	Ride	1
Miami-Dade	2014	Ride	1
Miami-Dade	2014	Ride	1
Miami-Dade	2014	Ride	1
Miami-Dade	2014	Ride	1
Miami-Dade	2014	Ride	1
Miami-Dade	2014	Ride	1
Miami-Dade	2014	Ride	1
Miami-Dade	2014	Ride	1
Miami-Dade	2014	Ride	1
Miami-Dade	2014	Ride	1
Miami-Dade	2014	Ride	2
Miami-Dade	2014	Ride	1
Miami-Dade	2014	Ride	2

CNTYNM	YEAR	MODE	TACTCNT
Miami-Dade	2014	Ride	2
Miami-Dade	2014	Ride	1
Miami-Dade	2014	Ride	1
Miami-Dade	2014	Ride	2
Miami-Dade	2014	Ride	19
Miami-Dade	2014	Ride	2
Miami-Dade	2014	Ride	19
Miami-Dade	2014	Ride	2
Miami-Dade	2014	Ride	1
Miami-Dade	2014	Ride	1
Miami-Dade	2014	Ride	18
Miami-Dade	2014	Ride	1
Miami-Dade	2014	Ride	1
Miami-Dade	2014	Ride	1
Miami-Dade	2014	Ride	1
Miami-Dade	2014	Ride	16
Miami-Dade	2014	Ride	1
Miami-Dade	2014	Ride	1
Miami-Dade	2014	Ride	1
Miami-Dade	2014	Ride	1
Miami-Dade	2014	Ride	1
Miami-Dade	2014	Ride	14
Miami-Dade	2014	Ride	14
Miami-Dade	2014	Ride	1
Miami-Dade	2014	Ride	86
Miami-Dade	2014	Ride	86
Miami-Dade	2014	Ride	2
Miami-Dade	2014	Ride	14
Miami-Dade	2014	Ride	13
Miami-Dade	2014	Ride	11
Miami-Dade	2014	Ride	2
Miami-Dade	2014	Ride	3
Miami-Dade	2014	Ride	4
Miami-Dade	2014	Ride	2
Miami-Dade	2014	Ride	2
Miami-Dade	2014	Ride	2
Miami-Dade	2014	Ride	2
Miami-Dade	2014	Ride	3
Miami-Dade	2014	Ride	2
Miami-Dade	2014	Ride	3
Miami-Dade	2014	Ride	3
Miami-Dade	2014	Ride	1
Miami-Dade	2014	Ride	13
Miami-Dade	2014	Ride	18
Miami-Dade	2014	Ride	9
Miami-Dade	2014	Ride	9
Miami-Dade	2014	Ride	17
Miami-Dade	2014	Ride	17
Miami-Dade	2014	Ride	17
Miami-Dade	2014	Ride	6
Miami-Dade	2014	Ride	9

CNTYNM	YEAR	MODE	TACTCNT
Miami-Dade	2014	Ride	1
Miami-Dade	2014	Ride	75
Miami-Dade	2014	Ride	83
Miami-Dade	2014	Ride	12
Miami-Dade	2014	Ride	2
Miami-Dade	2014	Ride	10
Miami-Dade	2014	Ride	10
Miami-Dade	2014	Ride	10
Miami-Dade	2014	Ride	10
Miami-Dade	2014	Ride	10
Miami-Dade	2014	Ride	30
Miami-Dade	2014	Ride	17
Miami-Dade	2014	Ride	16
Miami-Dade	2014	Ride	1
Miami-Dade	2014	Ride	31
Miami-Dade	2014	Ride	33
Miami-Dade	2014	Ride	17
Miami-Dade	2014	Ride	3
Miami-Dade	2014	Ride	16
Miami-Dade	2014	Ride	135
Miami-Dade	2014	Ride	113
Miami-Dade	2014	Ride	89
Miami-Dade	2014	Ride	95
Miami-Dade	2014	Ride	1
Miami-Dade	2014	Ride	67
Miami-Dade	2014	Ride	152
Miami-Dade	2014	Ride	149
Miami-Dade	2014	Ride	66
Miami-Dade	2014	Ride	31
Miami-Dade	2014	Ride	53
Miami-Dade	2014	Ride	57
Miami-Dade	2014	Ride	18
Miami-Dade	2014	Ride	811
Miami-Dade	2014	Ride	759
Miami-Dade	2014	Ride	20
Miami-Dade	2014	Ride	736
Miami-Dade	2014	Ride	709
Miami-Dade	2014	Ride	15
Miami-Dade	2014	Ride	34
Miami-Dade	2014	Ride	9
Miami-Dade	2014	Ride	617
Miami-Dade	2014	Ride	604
Miami-Dade	2014	Ride	7
Miami-Dade	2014	Ride	5
Miami-Dade	2014	Ride	2
Miami-Dade	2014	Ride	46
Miami-Dade	2014	Ride	1
Miami-Dade	2014	Ride	4
Miami-Dade	2014	Ride	2
Miami-Dade	2014	Ride	2
Miami-Dade	2014	Ride	1

CNTYNM	YEAR	MODE	TACTCNT
Miami-Dade	2014	Ride	3
Miami-Dade	2014	Ride	1
Miami-Dade	2014	Ride	271
Miami-Dade	2014	Ride	268
Miami-Dade	2014	Ride	46
Miami-Dade	2014	Ride	634
Miami-Dade	2014	Ride	647
Miami-Dade	2014	Ride	254
Miami-Dade	2014	Ride	250
Miami-Dade	2014	Ride	587
Miami-Dade	2014	Ride	561
Miami-Dade	2014	Ride	226
Miami-Dade	2014	Ride	224
Miami-Dade	2014	Ride	169
Miami-Dade	2014	Ride	1
Miami-Dade	2014	Ride	186
Miami-Dade	2014	Ride	199
Miami-Dade	2014	Ride	175
Miami-Dade	2014	Ride	8
Miami-Dade	2014	Ride	139
Miami-Dade	2014	Ride	45
Miami-Dade	2014	Ride	192
Miami-Dade	2014	Ride	262
Miami-Dade	2014	Ride	648
Miami-Dade	2014	Ride	431
Miami-Dade	2014	Ride	296
Miami-Dade	2014	Ride	308
Miami-Dade	2014	Ride	118
Miami-Dade	2014	Ride	111
Miami-Dade	2014	Ride	3
Miami-Dade	2014	Ride	4
Miami-Dade	2014	Ride	3
Miami-Dade	2014	Ride	203
Miami-Dade	2014	Ride	253
Miami-Dade	2014	Ride	40
Miami-Dade	2014	Ride	41
Miami-Dade	2014	Ride	30
Miami-Dade	2014	Ride	1
Miami-Dade	2014	Ride	2
Miami-Dade	2014	Ride	10
Miami-Dade	2014	Ride	11
Miami-Dade	2014	Ride	2
Miami-Dade	2014	Ride	642
Miami-Dade	2014	Ride	17
Miami-Dade	2014	Ride	46
Miami-Dade	2014	Ride	28
Miami-Dade	2014	Ride	25
Miami-Dade	2014	Ride	46
Miami-Dade	2014	Ride	55
Miami-Dade	2014	Ride	17
Miami-Dade	2014	Ride	42

CNTYNM	YEAR	MODE	TACTCNT
Miami-Dade	2014	Ride	20
Miami-Dade	2014	Ride	64
Miami-Dade	2014	Ride	6
Miami-Dade	2014	Ride	9
Miami-Dade	2014	Ride	2
Miami-Dade	2014	Ride	4
Miami-Dade	2014	Ride	209
Miami-Dade	2014	Ride	171
Miami-Dade	2014	Ride	418
Miami-Dade	2014	Ride	419
Miami-Dade	2014	Ride	221
Miami-Dade	2014	Ride	2
Miami-Dade	2014	Ride	31
Miami-Dade	2014	Ride	2
Miami-Dade	2014	Ride	1
Miami-Dade	2014	Ride	103
Miami-Dade	2014	Ride	2
Miami-Dade	2014	Ride	95
Miami-Dade	2014	Ride	260
Miami-Dade	2014	Ride	260
Miami-Dade	2014	Ride	482
Miami-Dade	2014	Ride	471
Miami-Dade	2014	Ride	245
Miami-Dade	2014	Ride	242
Miami-Dade	2014	Ride	74
Miami-Dade	2014	Ride	74
Miami-Dade	2014	Ride	79
Miami-Dade	2014	Ride	58
Miami-Dade	2014	Ride	5
Miami-Dade	2014	Ride	6
Miami-Dade	2014	Ride	5
Miami-Dade	2014	Ride	156
Miami-Dade	2014	Ride	152
Miami-Dade	2014	Ride	1
Miami-Dade	2014	Ride	3
Miami-Dade	2014	Ride	2
Miami-Dade	2014	Ride	2
Miami-Dade	2014	Ride	1
Miami-Dade	2014	Ride	11
Miami-Dade	2014	Ride	11
Miami-Dade	2014	Ride	47
Miami-Dade	2014	Ride	48
Miami-Dade	2014	Ride	158
Miami-Dade	2014	Ride	160
Miami-Dade	2014	Ride	38
Miami-Dade	2014	Ride	28
Miami-Dade	2014	Ride	21
Miami-Dade	2014	Ride	77
Miami-Dade	2014	Ride	10
Miami-Dade	2014	Ride	8
Miami-Dade	2014	Ride	8

CNTYNM	YEAR	MODE	TACTCNT
Miami-Dade	2014	Ride	10
Miami-Dade	2014	Ride	65
Miami-Dade	2014	Ride	23
Miami-Dade	2014	Ride	94
Miami-Dade	2014	Ride	93
Miami-Dade	2014	Ride	232
Miami-Dade	2014	Ride	56
Miami-Dade	2014	Ride	1
Miami-Dade	2014	Ride	1
Miami-Dade	2014	Ride	1
Miami-Dade	2014	Ride	162
Miami-Dade	2014	Ride	169
Miami-Dade	2014	Ride	164
Miami-Dade	2014	Ride	2
Miami-Dade	2014	Ride	2
Miami-Dade	2014	Ride	525
Miami-Dade	2014	Ride	542
Miami-Dade	2014	Ride	166
Miami-Dade	2014	Ride	170
Miami-Dade	2014	Ride	166
Miami-Dade	2014	Ride	160
Miami-Dade	2014	Ride	316
Miami-Dade	2014	Ride	1
Miami-Dade	2014	Ride	337
Miami-Dade	2014	Ride	335
Miami-Dade	2014	Ride	1
Miami-Dade	2014	Ride	45
Miami-Dade	2014	Ride	45
Miami-Dade	2014	Ride	44
Miami-Dade	2014	Ride	44
Miami-Dade	2014	Ride	1
Miami-Dade	2014	Ride	3
Miami-Dade	2014	Ride	44
Miami-Dade	2014	Ride	2
Miami-Dade	2014	Ride	1
Miami-Dade	2014	Ride	156
Miami-Dade	2014	Ride	144
Miami-Dade	2014	Ride	2
Miami-Dade	2014	Ride	2
Miami-Dade	2014	Ride	2
Miami-Dade	2014	Ride	2
Miami-Dade	2014	Ride	2
Miami-Dade	2014	Ride	1
Miami-Dade	2014	Ride	2
Miami-Dade	2014	Ride	2
Miami-Dade	2014	Ride	2
Miami-Dade	2014	Ride	2
Miami-Dade	2014	Ride	2
Miami-Dade	2014	Ride	153
Miami-Dade	2014	Ride	154
Miami-Dade	2014	Ride	12

CNTYNM	YEAR	MODE	TACTCNT
Miami-Dade	2015	RIDE	74
Miami-Dade	2015	RIDE	42
Miami-Dade	2015	RIDE	42
Miami-Dade	2015	RIDE	98
Miami-Dade	2015	RIDE	1379
Miami-Dade	2015	RIDE	1500
Miami-Dade	2015	RIDE	170
Miami-Dade	2015	RIDE	156
Miami-Dade	2015	RIDE	7
Miami-Dade	2015	RIDE	4
Miami-Dade	2015	RIDE	3
Miami-Dade	2015	RIDE	739
Miami-Dade	2015	RIDE	363
Miami-Dade	2015	RIDE	356
Miami-Dade	2015	RIDE	288
Miami-Dade	2015	RIDE	241
Miami-Dade	2015	RIDE	47
Miami-Dade	2015	RIDE	1
Miami-Dade	2015	RIDE	42
Miami-Dade	2015	RIDE	2
Miami-Dade	2015	RIDE	41
Miami-Dade	2015	RIDE	1
Miami-Dade	2015	RIDE	14
Miami-Dade	2015	RIDE	1
Miami-Dade	2015	RIDE	1
Miami-Dade	2015	RIDE	1
Miami-Dade	2015	RIDE	13
Miami-Dade	2015	RIDE	14
Miami-Dade	2015	RIDE	1
Miami-Dade	2015	RIDE	1
Miami-Dade	2015	RIDE	12
Miami-Dade	2015	RIDE	13
Miami-Dade	2015	RIDE	1
Miami-Dade	2015	RIDE	6
Miami-Dade	2015	RIDE	1
Miami-Dade	2015	RIDE	1
Miami-Dade	2015	RIDE	1
Miami-Dade	2015	RIDE	1
Miami-Dade	2015	RIDE	1
Miami-Dade	2015	RIDE	1
Miami-Dade	2015	RIDE	6
Miami-Dade	2015	RIDE	1
Miami-Dade	2015	RIDE	1
Miami-Dade	2015	RIDE	1
Miami-Dade	2015	RIDE	4
Miami-Dade	2015	RIDE	1
Miami-Dade	2015	RIDE	4
Miami-Dade	2015	RIDE	1
Miami-Dade	2015	RIDE	5
Miami-Dade	2015	RIDE	1
Miami-Dade	2015	RIDE	4

CNTYNM	YEAR	MODE	TACTCNT
Miami-Dade	2015	RIDE	10
Miami-Dade	2015	RIDE	6
Miami-Dade	2015	RIDE	1
Miami-Dade	2015	RIDE	2
Miami-Dade	2015	RIDE	1
Miami-Dade	2015	RIDE	2
Miami-Dade	2015	RIDE	2
Miami-Dade	2015	RIDE	2
Miami-Dade	2015	RIDE	40
Miami-Dade	2015	RIDE	1
Miami-Dade	2015	RIDE	1
Miami-Dade	2015	RIDE	1
Miami-Dade	2015	RIDE	1
Miami-Dade	2015	RIDE	1
Miami-Dade	2015	RIDE	83
Miami-Dade	2015	RIDE	44
Miami-Dade	2015	RIDE	71
Miami-Dade	2015	RIDE	84
Miami-Dade	2015	RIDE	1
Miami-Dade	2015	RIDE	60
Miami-Dade	2015	RIDE	56
Miami-Dade	2015	RIDE	55
Miami-Dade	2015	RIDE	58
Miami-Dade	2015	RIDE	4
Miami-Dade	2015	RIDE	63
Miami-Dade	2015	RIDE	64
Miami-Dade	2015	RIDE	1
Miami-Dade	2015	RIDE	65
Miami-Dade	2015	RIDE	55
Miami-Dade	2015	RIDE	26
Miami-Dade	2015	RIDE	35
Miami-Dade	2015	RIDE	1
Miami-Dade	2015	RIDE	1
Miami-Dade	2015	RIDE	65
Miami-Dade	2015	RIDE	74
Miami-Dade	2015	RIDE	39
Miami-Dade	2015	RIDE	39
Miami-Dade	2015	RIDE	1
Miami-Dade	2015	RIDE	2
Miami-Dade	2015	RIDE	5
Miami-Dade	2015	RIDE	4
Miami-Dade	2015	RIDE	3
Miami-Dade	2015	RIDE	2
Miami-Dade	2015	RIDE	41
Miami-Dade	2015	RIDE	2
Miami-Dade	2015	RIDE	2
Miami-Dade	2015	RIDE	11
Miami-Dade	2015	RIDE	9
Miami-Dade	2015	RIDE	44
Miami-Dade	2015	RIDE	6
Miami-Dade	2015	RIDE	3

CNTYNM	YEAR	MODE	TACTCNT
Miami-Dade	2015	RIDE	3
Miami-Dade	2015	RIDE	10
Miami-Dade	2015	RIDE	5
Miami-Dade	2015	RIDE	3
Miami-Dade	2015	RIDE	3
Miami-Dade	2015	RIDE	9
Miami-Dade	2015	RIDE	5
Miami-Dade	2015	RIDE	1
Miami-Dade	2015	RIDE	5
Miami-Dade	2015	RIDE	4
Miami-Dade	2015	RIDE	1
Miami-Dade	2015	RIDE	3
Miami-Dade	2015	RIDE	11
Miami-Dade	2015	RIDE	1
Miami-Dade	2015	RIDE	4
Miami-Dade	2015	RIDE	1
Miami-Dade	2015	RIDE	5
Miami-Dade	2015	RIDE	2
Miami-Dade	2015	RIDE	9
Miami-Dade	2015	RIDE	29
Miami-Dade	2015	RIDE	10
Miami-Dade	2015	RIDE	3
Miami-Dade	2015	RIDE	9
Miami-Dade	2015	RIDE	15
Miami-Dade	2015	RIDE	18
Miami-Dade	2015	RIDE	1
Miami-Dade	2015	RIDE	25
Miami-Dade	2015	RIDE	3
Miami-Dade	2015	RIDE	21
Miami-Dade	2015	RIDE	2
Miami-Dade	2015	RIDE	21
Miami-Dade	2015	RIDE	20
Miami-Dade	2015	RIDE	47
Miami-Dade	2015	RIDE	25
Miami-Dade	2015	RIDE	1
Miami-Dade	2015	RIDE	25
Miami-Dade	2015	RIDE	2
Miami-Dade	2015	RIDE	25
Miami-Dade	2015	RIDE	9
Miami-Dade	2015	RIDE	67
Miami-Dade	2015	RIDE	68
Miami-Dade	2015	RIDE	69
Miami-Dade	2015	RIDE	70
Miami-Dade	2015	RIDE	18
Miami-Dade	2015	RIDE	52
Miami-Dade	2015	RIDE	25
Miami-Dade	2015	RIDE	29
Miami-Dade	2015	RIDE	2
Miami-Dade	2015	RIDE	30
Miami-Dade	2015	RIDE	11
Miami-Dade	2015	RIDE	6

CNTYNM	YEAR	MODE	TACTCNT
Miami-Dade	2015	RIDE	15
Miami-Dade	2015	RIDE	4
Miami-Dade	2015	RIDE	9
Miami-Dade	2015	RIDE	50
Miami-Dade	2015	RIDE	3
Miami-Dade	2015	RIDE	2
Miami-Dade	2015	RIDE	2
Miami-Dade	2015	RIDE	47
Miami-Dade	2015	RIDE	4
Miami-Dade	2015	RIDE	30
Miami-Dade	2015	RIDE	49
Miami-Dade	2015	RIDE	51
Miami-Dade	2015	RIDE	2
Miami-Dade	2015	RIDE	50
Miami-Dade	2015	RIDE	46
Miami-Dade	2015	RIDE	69
Miami-Dade	2015	RIDE	2
Miami-Dade	2015	RIDE	68
Miami-Dade	2015	RIDE	2
Miami-Dade	2015	RIDE	67
Miami-Dade	2015	RIDE	1
Miami-Dade	2015	RIDE	62
Miami-Dade	2015	RIDE	94
Miami-Dade	2015	RIDE	3
Miami-Dade	2015	RIDE	16
Miami-Dade	2015	RIDE	1
Miami-Dade	2015	RIDE	3
Miami-Dade	2015	RIDE	2
Miami-Dade	2015	RIDE	3
Miami-Dade	2015	RIDE	50
Miami-Dade	2015	RIDE	3
Miami-Dade	2015	RIDE	3
Miami-Dade	2015	RIDE	4
Miami-Dade	2015	RIDE	3
Miami-Dade	2015	RIDE	1
Miami-Dade	2015	RIDE	11
Miami-Dade	2015	RIDE	18
Miami-Dade	2015	RIDE	1
Miami-Dade	2015	RIDE	1
Miami-Dade	2015	RIDE	1
Miami-Dade	2015	RIDE	29
Miami-Dade	2015	RIDE	17
Miami-Dade	2015	RIDE	2
Miami-Dade	2015	RIDE	5
Miami-Dade	2015	RIDE	7
Miami-Dade	2015	RIDE	4
Miami-Dade	2015	RIDE	2
Miami-Dade	2015	RIDE	4
Miami-Dade	2015	RIDE	47
Miami-Dade	2015	RIDE	2
Miami-Dade	2015	RIDE	3

CNTYNM	YEAR	MODE	TACTCNT
Miami-Dade	2015	RIDE	3
Miami-Dade	2015	RIDE	20
Miami-Dade	2015	RIDE	3
Miami-Dade	2015	RIDE	2
Miami-Dade	2015	RIDE	4
Miami-Dade	2015	RIDE	134
Miami-Dade	2015	RIDE	2
Miami-Dade	2015	RIDE	126
Miami-Dade	2015	RIDE	1
Miami-Dade	2015	RIDE	1
Miami-Dade	2015	RIDE	128
Miami-Dade	2015	RIDE	97
Miami-Dade	2015	RIDE	93
Miami-Dade	2015	RIDE	12
Miami-Dade	2015	RIDE	85
Miami-Dade	2015	RIDE	113
Miami-Dade	2015	RIDE	113
Miami-Dade	2015	RIDE	108
Miami-Dade	2015	RIDE	110
Miami-Dade	2015	RIDE	102
Miami-Dade	2015	RIDE	104
Miami-Dade	2015	RIDE	2
Miami-Dade	2015	RIDE	101
Miami-Dade	2015	RIDE	131
Miami-Dade	2015	RIDE	1
Miami-Dade	2015	RIDE	130
Miami-Dade	2015	RIDE	127
Miami-Dade	2015	RIDE	125
Miami-Dade	2015	RIDE	25
Miami-Dade	2015	RIDE	143
Miami-Dade	2015	RIDE	14
Miami-Dade	2015	RIDE	2
Miami-Dade	2015	RIDE	3
Miami-Dade	2015	RIDE	3
Miami-Dade	2015	RIDE	2
Miami-Dade	2015	RIDE	3
Miami-Dade	2015	RIDE	4
Miami-Dade	2015	RIDE	5
Miami-Dade	2015	RIDE	4
Miami-Dade	2015	RIDE	4
Miami-Dade	2015	RIDE	1
Miami-Dade	2015	RIDE	5
Miami-Dade	2015	RIDE	30
Miami-Dade	2015	RIDE	5
Miami-Dade	2015	RIDE	3
Miami-Dade	2015	RIDE	15
Miami-Dade	2015	RIDE	17
Miami-Dade	2015	RIDE	22
Miami-Dade	2015	RIDE	4
Miami-Dade	2015	RIDE	16
Miami-Dade	2015	RIDE	1

CNTYNM	YEAR	MODE	TACTCNT
Miami-Dade	2015	RIDE	8
Miami-Dade	2015	RIDE	2
Miami-Dade	2015	RIDE	24
Miami-Dade	2015	RIDE	21
Miami-Dade	2015	RIDE	28
Miami-Dade	2015	RIDE	3
Miami-Dade	2015	RIDE	24
Miami-Dade	2015	RIDE	5
Miami-Dade	2015	RIDE	32
Miami-Dade	2015	RIDE	17
Miami-Dade	2015	RIDE	25
Miami-Dade	2015	RIDE	2
Miami-Dade	2015	RIDE	22
Miami-Dade	2015	RIDE	31
Miami-Dade	2015	RIDE	51
Miami-Dade	2015	RIDE	3
Miami-Dade	2015	RIDE	75
Miami-Dade	2015	RIDE	70
Miami-Dade	2015	RIDE	2
Miami-Dade	2015	RIDE	85
Miami-Dade	2015	RIDE	1
Miami-Dade	2015	RIDE	87
Miami-Dade	2015	RIDE	5
Miami-Dade	2015	RIDE	94
Miami-Dade	2015	RIDE	38
Miami-Dade	2015	RIDE	65
Miami-Dade	2015	RIDE	96
Miami-Dade	2015	RIDE	91
Miami-Dade	2015	RIDE	91
Miami-Dade	2015	RIDE	91
Miami-Dade	2015	RIDE	91
Miami-Dade	2015	RIDE	91
Miami-Dade	2015	RIDE	32
Miami-Dade	2015	RIDE	81
Miami-Dade	2015	RIDE	2
Miami-Dade	2015	RIDE	78
Miami-Dade	2015	RIDE	20
Miami-Dade	2015	RIDE	57
Miami-Dade	2015	RIDE	57
Miami-Dade	2015	RIDE	21
Miami-Dade	2015	RIDE	53
Miami-Dade	2015	RIDE	28
Miami-Dade	2015	RIDE	77
Miami-Dade	2015	RIDE	2
Miami-Dade	2015	RIDE	19
Miami-Dade	2015	RIDE	4
Miami-Dade	2015	RIDE	10
Miami-Dade	2015	RIDE	4
Miami-Dade	2015	RIDE	2
Miami-Dade	2015	RIDE	2
Miami-Dade	2015	RIDE	4

CNTYNM	YEAR	MODE	TACTCNT
Miami-Dade	2015	RIDE	28
Miami-Dade	2015	RIDE	2
Miami-Dade	2015	RIDE	16
Miami-Dade	2015	RIDE	16
Miami-Dade	2015	RIDE	13
Miami-Dade	2015	RIDE	79
Miami-Dade	2015	RIDE	1
Miami-Dade	2015	RIDE	19
Miami-Dade	2015	RIDE	31
Miami-Dade	2015	RIDE	1
Miami-Dade	2015	RIDE	7
Miami-Dade	2015	RIDE	8
Miami-Dade	2015	RIDE	2
Miami-Dade	2015	RIDE	23
Miami-Dade	2015	RIDE	27
Miami-Dade	2015	RIDE	79
Miami-Dade	2015	RIDE	2
Miami-Dade	2015	RIDE	2
Miami-Dade	2015	RIDE	78
Miami-Dade	2015	RIDE	2
Miami-Dade	2015	RIDE	19
Miami-Dade	2015	RIDE	2
Miami-Dade	2015	RIDE	6
Miami-Dade	2015	RIDE	16
Miami-Dade	2015	RIDE	7
Miami-Dade	2015	RIDE	27
Miami-Dade	2015	RIDE	2
Miami-Dade	2015	RIDE	4
Miami-Dade	2015	RIDE	15
Miami-Dade	2015	RIDE	29
Miami-Dade	2015	RIDE	16
Miami-Dade	2015	RIDE	1
Miami-Dade	2015	RIDE	39
Miami-Dade	2015	RIDE	75
Miami-Dade	2015	RIDE	30
Miami-Dade	2015	RIDE	48
Miami-Dade	2015	RIDE	1
Miami-Dade	2015	RIDE	21
Miami-Dade	2015	RIDE	2
Miami-Dade	2015	RIDE	3
Miami-Dade	2015	RIDE	6
Miami-Dade	2015	RIDE	29
Miami-Dade	2015	RIDE	6
Miami-Dade	2015	RIDE	1
Miami-Dade	2015	RIDE	1
Miami-Dade	2015	RIDE	17
Miami-Dade	2015	RIDE	101
Miami-Dade	2015	RIDE	30
Miami-Dade	2015	RIDE	113
Miami-Dade	2015	RIDE	30
Miami-Dade	2015	RIDE	101

CNTYNM	YEAR	MODE	TACTCNT
Miami-Dade	2015	RIDE	83
Miami-Dade	2015	RIDE	33
Miami-Dade	2015	RIDE	75
Miami-Dade	2015	RIDE	21
Miami-Dade	2015	RIDE	74
Miami-Dade	2015	RIDE	78
Miami-Dade	2015	RIDE	78
Miami-Dade	2015	RIDE	7
Miami-Dade	2015	RIDE	66
Miami-Dade	2015	RIDE	65
Miami-Dade	2015	RIDE	64
Miami-Dade	2015	RIDE	64
Miami-Dade	2015	RIDE	63
Miami-Dade	2015	RIDE	64
Miami-Dade	2015	RIDE	27
Miami-Dade	2015	RIDE	42
Miami-Dade	2015	RIDE	38
Miami-Dade	2015	RIDE	5
Miami-Dade	2015	RIDE	37
Miami-Dade	2015	RIDE	18
Miami-Dade	2015	RIDE	8
Miami-Dade	2015	RIDE	1
Miami-Dade	2015	RIDE	13
Miami-Dade	2015	RIDE	24
Miami-Dade	2015	RIDE	19
Miami-Dade	2015	RIDE	5
Miami-Dade	2015	RIDE	38
Miami-Dade	2015	RIDE	21
Miami-Dade	2015	RIDE	3
Miami-Dade	2015	RIDE	3
Miami-Dade	2015	RIDE	6
Miami-Dade	2015	RIDE	7
Miami-Dade	2015	RIDE	6
Miami-Dade	2015	RIDE	51
Miami-Dade	2015	RIDE	3
Miami-Dade	2015	RIDE	4
Miami-Dade	2015	RIDE	7
Miami-Dade	2015	RIDE	14
Miami-Dade	2015	RIDE	1
Miami-Dade	2015	RIDE	12
Miami-Dade	2015	RIDE	24
Miami-Dade	2015	RIDE	3
Miami-Dade	2015	RIDE	10
Miami-Dade	2015	RIDE	7
Miami-Dade	2015	RIDE	3
Miami-Dade	2015	RIDE	3
Miami-Dade	2015	RIDE	95
Miami-Dade	2015	RIDE	1
Miami-Dade	2015	RIDE	32
Miami-Dade	2015	RIDE	14
Miami-Dade	2015	RIDE	12

CNTYNM	YEAR	MODE	TACTCNT
Miami-Dade	2015	RIDE	4
Miami-Dade	2015	RIDE	2
Miami-Dade	2015	RIDE	1
Miami-Dade	2015	RIDE	1
Miami-Dade	2015	RIDE	2
Miami-Dade	2015	RIDE	1
Miami-Dade	2015	RIDE	16
Miami-Dade	2015	RIDE	33
Miami-Dade	2015	RIDE	51
Miami-Dade	2015	RIDE	66
Miami-Dade	2015	RIDE	75
Miami-Dade	2015	RIDE	3
Miami-Dade	2015	RIDE	11
Miami-Dade	2015	RIDE	12
Miami-Dade	2015	RIDE	3
Miami-Dade	2015	RIDE	1
Miami-Dade	2015	RIDE	1
Miami-Dade	2015	RIDE	52
Miami-Dade	2015	RIDE	3
Miami-Dade	2015	RIDE	14
Miami-Dade	2015	RIDE	23
Miami-Dade	2015	RIDE	63
Miami-Dade	2015	RIDE	4
Miami-Dade	2015	RIDE	62
Miami-Dade	2015	RIDE	1
Miami-Dade	2015	RIDE	4
Miami-Dade	2015	RIDE	2
Miami-Dade	2015	RIDE	63
Miami-Dade	2015	RIDE	45
Miami-Dade	2015	RIDE	64
Miami-Dade	2015	RIDE	85
Miami-Dade	2015	RIDE	1
Miami-Dade	2015	RIDE	56
Miami-Dade	2015	RIDE	34
Miami-Dade	2015	RIDE	71
Miami-Dade	2015	RIDE	22
Miami-Dade	2015	RIDE	84
Miami-Dade	2015	RIDE	60
Miami-Dade	2015	RIDE	69
Miami-Dade	2015	RIDE	1
Miami-Dade	2015	RIDE	3
Miami-Dade	2015	RIDE	3
Miami-Dade	2015	RIDE	2
Miami-Dade	2015	RIDE	108
Miami-Dade	2015	RIDE	23
Miami-Dade	2015	RIDE	5
Miami-Dade	2015	RIDE	103
Miami-Dade	2015	RIDE	98
Miami-Dade	2015	RIDE	7
Miami-Dade	2015	RIDE	7
Miami-Dade	2015	RIDE	7

CNTYNM	YEAR	MODE	TACTCNT
Miami-Dade	2015	RIDE	14
Miami-Dade	2015	RIDE	12
Miami-Dade	2015	RIDE	14
Miami-Dade	2015	RIDE	14
Miami-Dade	2015	RIDE	3
Miami-Dade	2015	RIDE	6
Miami-Dade	2015	RIDE	2
Miami-Dade	2015	RIDE	22
Miami-Dade	2015	RIDE	3
Miami-Dade	2015	RIDE	2
Miami-Dade	2015	RIDE	2
Miami-Dade	2015	RIDE	2
Miami-Dade	2015	RIDE	2
Miami-Dade	2015	RIDE	3
Miami-Dade	2015	RIDE	2
Miami-Dade	2015	RIDE	3
Miami-Dade	2015	RIDE	4
Miami-Dade	2015	RIDE	2
Miami-Dade	2015	RIDE	1
Miami-Dade	2015	RIDE	1
Miami-Dade	2015	RIDE	21
Miami-Dade	2015	RIDE	35
Miami-Dade	2015	RIDE	37
Miami-Dade	2015	RIDE	42
Miami-Dade	2015	RIDE	33
Miami-Dade	2015	RIDE	31
Miami-Dade	2015	RIDE	26
Miami-Dade	2015	RIDE	56
Miami-Dade	2015	RIDE	26
Miami-Dade	2015	RIDE	32
Miami-Dade	2015	RIDE	1
Miami-Dade	2015	RIDE	27
Miami-Dade	2015	RIDE	131
Miami-Dade	2015	RIDE	7
Miami-Dade	2015	RIDE	1
Miami-Dade	2015	RIDE	3
Miami-Dade	2015	RIDE	43
Miami-Dade	2015	RIDE	115
Miami-Dade	2015	RIDE	48
Miami-Dade	2015	RIDE	53
Miami-Dade	2015	RIDE	117
Miami-Dade	2015	RIDE	47
Miami-Dade	2015	RIDE	5
Miami-Dade	2015	RIDE	3
Miami-Dade	2015	RIDE	181
Miami-Dade	2015	RIDE	176
Miami-Dade	2015	RIDE	81
Miami-Dade	2015	RIDE	70
Miami-Dade	2015	RIDE	160
Miami-Dade	2015	RIDE	35
Miami-Dade	2015	RIDE	192

CNTYNM	YEAR	MODE	TACTCNT
Miami-Dade	2015	RIDE	181
Miami-Dade	2015	RIDE	6
Miami-Dade	2015	RIDE	157
Miami-Dade	2015	RIDE	137
Miami-Dade	2015	RIDE	21
Miami-Dade	2015	RIDE	64
Miami-Dade	2015	RIDE	53
Miami-Dade	2015	RIDE	25
Miami-Dade	2015	RIDE	60
Miami-Dade	2015	RIDE	136
Miami-Dade	2015	RIDE	60
Miami-Dade	2015	RIDE	58
Miami-Dade	2015	RIDE	1
Miami-Dade	2015	RIDE	18
Miami-Dade	2015	RIDE	7
Miami-Dade	2015	RIDE	65
Miami-Dade	2015	RIDE	35
Miami-Dade	2015	RIDE	27
Miami-Dade	2015	RIDE	28
Miami-Dade	2015	RIDE	55
Miami-Dade	2015	RIDE	66
Miami-Dade	2015	RIDE	28
Miami-Dade	2015	RIDE	43
Miami-Dade	2015	RIDE	91
Miami-Dade	2015	RIDE	62
Miami-Dade	2015	RIDE	2
Miami-Dade	2015	RIDE	3
Miami-Dade	2015	RIDE	29
Miami-Dade	2015	RIDE	10
Miami-Dade	2015	RIDE	1
Miami-Dade	2015	RIDE	9
Miami-Dade	2015	RIDE	62
Miami-Dade	2015	RIDE	6
Miami-Dade	2015	RIDE	6
Miami-Dade	2015	RIDE	9
Miami-Dade	2015	RIDE	28
Miami-Dade	2015	RIDE	9
Miami-Dade	2015	RIDE	60
Miami-Dade	2015	RIDE	3
Miami-Dade	2015	RIDE	4
Miami-Dade	2015	RIDE	6
Miami-Dade	2015	RIDE	6
Miami-Dade	2015	RIDE	2
Miami-Dade	2015	RIDE	21
Miami-Dade	2015	RIDE	3
Miami-Dade	2015	RIDE	2
Miami-Dade	2015	RIDE	1
Miami-Dade	2015	RIDE	52
Miami-Dade	2015	RIDE	57
Miami-Dade	2015	RIDE	6
Miami-Dade	2015	RIDE	5

CNTYNM	YEAR	MODE	TACTCNT
Miami-Dade	2015	RIDE	17
Miami-Dade	2015	RIDE	9
Miami-Dade	2015	RIDE	13
Miami-Dade	2015	RIDE	21
Miami-Dade	2015	RIDE	1
Miami-Dade	2015	RIDE	3
Miami-Dade	2015	RIDE	1
Miami-Dade	2015	RIDE	3
Miami-Dade	2015	RIDE	61
Miami-Dade	2015	RIDE	60
Miami-Dade	2015	RIDE	1
Miami-Dade	2015	RIDE	23
Miami-Dade	2015	RIDE	2
Miami-Dade	2015	RIDE	24
Miami-Dade	2015	RIDE	1
Miami-Dade	2015	RIDE	12
Miami-Dade	2015	RIDE	12
Miami-Dade	2015	RIDE	20
Miami-Dade	2015	RIDE	1
Miami-Dade	2015	RIDE	20
Miami-Dade	2015	RIDE	64
Miami-Dade	2015	RIDE	22
Miami-Dade	2015	RIDE	22
Miami-Dade	2015	RIDE	21
Miami-Dade	2015	RIDE	23
Miami-Dade	2015	RIDE	23
Miami-Dade	2015	RIDE	13
Miami-Dade	2015	RIDE	8
Miami-Dade	2015	RIDE	228
Miami-Dade	2015	RIDE	9
Miami-Dade	2015	RIDE	6
Miami-Dade	2015	RIDE	240
Miami-Dade	2015	RIDE	5
Miami-Dade	2015	RIDE	16
Miami-Dade	2015	RIDE	68
Miami-Dade	2015	RIDE	72
Miami-Dade	2015	RIDE	183
Miami-Dade	2015	RIDE	21
Miami-Dade	2015	RIDE	5
Miami-Dade	2015	RIDE	22
Miami-Dade	2015	RIDE	3
Miami-Dade	2015	RIDE	34
Miami-Dade	2015	RIDE	2
Miami-Dade	2015	RIDE	1
Miami-Dade	2015	RIDE	2
Miami-Dade	2015	RIDE	63
Miami-Dade	2015	RIDE	137
Miami-Dade	2015	RIDE	9
Miami-Dade	2015	RIDE	18
Miami-Dade	2015	RIDE	9
Miami-Dade	2015	RIDE	11

CNTYNM	YEAR	MODE	TACTCNT
Miami-Dade	2015	RIDE	2
Miami-Dade	2015	RIDE	14
Miami-Dade	2015	RIDE	67
Miami-Dade	2015	RIDE	14
Miami-Dade	2015	RIDE	240
Miami-Dade	2015	RIDE	1
Miami-Dade	2015	RIDE	20
Miami-Dade	2015	RIDE	3
Miami-Dade	2015	RIDE	21
Miami-Dade	2015	RIDE	1
Miami-Dade	2015	RIDE	35
Miami-Dade	2015	RIDE	6
Miami-Dade	2015	RIDE	2
Miami-Dade	2015	RIDE	7
Miami-Dade	2015	RIDE	72
Miami-Dade	2015	RIDE	31
Miami-Dade	2015	RIDE	29
Miami-Dade	2015	RIDE	78
Miami-Dade	2015	RIDE	15
Miami-Dade	2015	RIDE	17
Miami-Dade	2015	RIDE	23
Miami-Dade	2015	RIDE	18
Miami-Dade	2015	RIDE	19
Miami-Dade	2015	RIDE	220
Miami-Dade	2015	RIDE	11
Miami-Dade	2015	RIDE	1
Miami-Dade	2015	RIDE	75
Miami-Dade	2015	RIDE	13
Miami-Dade	2015	RIDE	77
Miami-Dade	2015	RIDE	5
Miami-Dade	2015	RIDE	11
Miami-Dade	2015	RIDE	11
Miami-Dade	2015	RIDE	14
Miami-Dade	2015	RIDE	4
Miami-Dade	2015	RIDE	195
Miami-Dade	2015	RIDE	8
Miami-Dade	2015	RIDE	194
Miami-Dade	2015	RIDE	5
Miami-Dade	2015	RIDE	1
Miami-Dade	2015	RIDE	57
Miami-Dade	2015	RIDE	2
Miami-Dade	2015	RIDE	73
Miami-Dade	2015	RIDE	4
Miami-Dade	2015	RIDE	6
Miami-Dade	2015	RIDE	5
Miami-Dade	2015	RIDE	57
Miami-Dade	2015	RIDE	1
Miami-Dade	2015	RIDE	76
Miami-Dade	2015	RIDE	34
Miami-Dade	2015	RIDE	196
Miami-Dade	2015	RIDE	15

CNTYNM	YEAR	MODE	TACTCNT
Miami-Dade	2015	RIDE	14
Miami-Dade	2015	RIDE	110
Miami-Dade	2015	RIDE	32
Miami-Dade	2015	RIDE	27
Miami-Dade	2015	RIDE	30
Miami-Dade	2015	RIDE	57
Miami-Dade	2015	RIDE	1
Miami-Dade	2015	RIDE	1
Miami-Dade	2015	RIDE	179
Miami-Dade	2015	RIDE	123
Miami-Dade	2015	RIDE	86
Miami-Dade	2015	RIDE	10
Miami-Dade	2015	RIDE	1
Miami-Dade	2015	RIDE	99
Miami-Dade	2015	RIDE	1
Miami-Dade	2015	RIDE	94
Miami-Dade	2015	RIDE	11
Miami-Dade	2015	RIDE	132
Miami-Dade	2015	RIDE	186
Miami-Dade	2015	RIDE	121
Miami-Dade	2015	RIDE	1
Miami-Dade	2015	RIDE	6
Miami-Dade	2015	RIDE	4
Miami-Dade	2015	RIDE	1
Miami-Dade	2015	RIDE	307
Miami-Dade	2015	RIDE	290
Miami-Dade	2015	RIDE	230
Miami-Dade	2015	RIDE	5
Miami-Dade	2015	RIDE	97
Miami-Dade	2015	RIDE	70
Miami-Dade	2015	RIDE	60
Miami-Dade	2015	RIDE	228
Miami-Dade	2015	RIDE	41
Miami-Dade	2015	RIDE	1
Miami-Dade	2015	RIDE	2
Miami-Dade	2015	RIDE	55
Miami-Dade	2015	RIDE	4
Miami-Dade	2015	RIDE	2
Miami-Dade	2015	RIDE	107
Miami-Dade	2015	RIDE	149
Miami-Dade	2015	RIDE	77
Miami-Dade	2015	RIDE	2
Miami-Dade	2015	RIDE	70
Miami-Dade	2015	RIDE	187
Miami-Dade	2015	RIDE	2
Miami-Dade	2015	RIDE	3
Miami-Dade	2015	RIDE	63
Miami-Dade	2015	RIDE	3
Miami-Dade	2015	RIDE	2
Miami-Dade	2015	RIDE	120
Miami-Dade	2015	RIDE	242

CNTYNM	YEAR	MODE	TACTCNT
Miami-Dade	2015	RIDE	65
Miami-Dade	2015	RIDE	59
Miami-Dade	2015	RIDE	321
Miami-Dade	2015	RIDE	388
Miami-Dade	2015	RIDE	263
Miami-Dade	2015	RIDE	130
Miami-Dade	2015	RIDE	1
Miami-Dade	2015	RIDE	138
Miami-Dade	2015	RIDE	128
Miami-Dade	2015	RIDE	5
Miami-Dade	2015	RIDE	4
Miami-Dade	2015	RIDE	4
Miami-Dade	2015	RIDE	4
Miami-Dade	2015	RIDE	8
Miami-Dade	2015	RIDE	3
Miami-Dade	2015	RIDE	123
Miami-Dade	2015	RIDE	6
Miami-Dade	2015	RIDE	6
Miami-Dade	2015	RIDE	9
Miami-Dade	2015	RIDE	6
Miami-Dade	2015	RIDE	74
Miami-Dade	2015	RIDE	77
Miami-Dade	2015	RIDE	6
Miami-Dade	2015	RIDE	17
Miami-Dade	2015	RIDE	2
Miami-Dade	2015	RIDE	81
Miami-Dade	2015	RIDE	65
Miami-Dade	2015	RIDE	100
Miami-Dade	2015	RIDE	105
Miami-Dade	2015	RIDE	86
Miami-Dade	2015	RIDE	77
Miami-Dade	2015	RIDE	71
Miami-Dade	2015	RIDE	81
Miami-Dade	2015	RIDE	9
Miami-Dade	2015	RIDE	83
Miami-Dade	2015	RIDE	78
Miami-Dade	2015	RIDE	6
Miami-Dade	2015	RIDE	5
Miami-Dade	2015	RIDE	6
Miami-Dade	2015	RIDE	11
Miami-Dade	2015	RIDE	4
Miami-Dade	2015	RIDE	20
Miami-Dade	2015	RIDE	128
Miami-Dade	2015	RIDE	74
Miami-Dade	2015	RIDE	18
Miami-Dade	2015	RIDE	20
Miami-Dade	2015	RIDE	45
Miami-Dade	2015	RIDE	10
Miami-Dade	2015	RIDE	9
Miami-Dade	2015	RIDE	1
Miami-Dade	2015	RIDE	10

CNTYNM	YEAR	MODE	TACTCNT
Miami-Dade	2015	RIDE	23
Miami-Dade	2015	RIDE	22
Miami-Dade	2015	RIDE	18
Miami-Dade	2015	RIDE	1
Miami-Dade	2015	RIDE	122
Miami-Dade	2015	RIDE	8
Miami-Dade	2015	RIDE	9
Miami-Dade	2015	RIDE	2
Miami-Dade	2015	RIDE	11
Miami-Dade	2015	RIDE	18
Miami-Dade	2015	RIDE	7
Miami-Dade	2015	RIDE	253
Miami-Dade	2015	RIDE	2
Miami-Dade	2015	RIDE	11
Miami-Dade	2015	RIDE	1
Miami-Dade	2015	RIDE	1
Miami-Dade	2015	RIDE	4
Miami-Dade	2015	RIDE	8
Miami-Dade	2015	RIDE	237
Miami-Dade	2015	RIDE	11
Miami-Dade	2015	RIDE	12
Miami-Dade	2015	RIDE	6
Miami-Dade	2015	RIDE	126
Miami-Dade	2015	RIDE	15
Miami-Dade	2015	RIDE	3
Miami-Dade	2015	RIDE	22
Miami-Dade	2015	RIDE	1
Miami-Dade	2015	RIDE	4
Miami-Dade	2015	RIDE	8
Miami-Dade	2015	RIDE	1
Miami-Dade	2015	RIDE	246
Miami-Dade	2015	RIDE	2
Miami-Dade	2015	RIDE	12
Miami-Dade	2015	RIDE	143
Miami-Dade	2015	RIDE	1
Miami-Dade	2015	RIDE	3
Miami-Dade	2015	RIDE	25
Miami-Dade	2015	RIDE	7
Miami-Dade	2015	RIDE	2
Miami-Dade	2015	RIDE	1
Miami-Dade	2015	RIDE	8
Miami-Dade	2015	RIDE	8
Miami-Dade	2015	RIDE	29
Miami-Dade	2015	RIDE	13
Miami-Dade	2015	RIDE	1
Miami-Dade	2015	RIDE	142
Miami-Dade	2015	RIDE	90
Miami-Dade	2015	RIDE	73
Miami-Dade	2015	RIDE	15
Miami-Dade	2015	RIDE	4
Miami-Dade	2015	RIDE	210

CNTYNM	YEAR	MODE	TACTCNT
Miami-Dade	2015	RIDE	2
Miami-Dade	2015	RIDE	8
Miami-Dade	2015	RIDE	7
Miami-Dade	2015	RIDE	255
Miami-Dade	2015	RIDE	1
Miami-Dade	2015	RIDE	225
Miami-Dade	2015	RIDE	248
Miami-Dade	2015	RIDE	251
Miami-Dade	2015	RIDE	22
Miami-Dade	2015	RIDE	270
Miami-Dade	2015	RIDE	248
Miami-Dade	2015	RIDE	21
Miami-Dade	2015	RIDE	254
Miami-Dade	2015	RIDE	220
Miami-Dade	2015	RIDE	15
Miami-Dade	2015	RIDE	11
Miami-Dade	2015	RIDE	21
Miami-Dade	2015	RIDE	15
Miami-Dade	2015	RIDE	9
Miami-Dade	2015	RIDE	98
Miami-Dade	2015	RIDE	29
Miami-Dade	2015	RIDE	119
Miami-Dade	2015	RIDE	141
Miami-Dade	2015	RIDE	85
Miami-Dade	2015	RIDE	1
Miami-Dade	2015	RIDE	13
Miami-Dade	2015	RIDE	84
Miami-Dade	2015	RIDE	12
Miami-Dade	2015	RIDE	57
Miami-Dade	2015	RIDE	104
Miami-Dade	2015	RIDE	26
Miami-Dade	2015	RIDE	117
Miami-Dade	2015	RIDE	147
Miami-Dade	2015	RIDE	2
Miami-Dade	2015	RIDE	12
Miami-Dade	2015	RIDE	23
Miami-Dade	2015	RIDE	19
Miami-Dade	2015	RIDE	120
Miami-Dade	2015	RIDE	148
Miami-Dade	2015	RIDE	11
Miami-Dade	2015	RIDE	101
Miami-Dade	2015	RIDE	9
Miami-Dade	2015	RIDE	1
Miami-Dade	2015	RIDE	11
Miami-Dade	2015	RIDE	116
Miami-Dade	2015	RIDE	25
Miami-Dade	2015	RIDE	26
Miami-Dade	2015	RIDE	72
Miami-Dade	2015	RIDE	123
Miami-Dade	2015	RIDE	6
Miami-Dade	2015	RIDE	155

CNTYNM	YEAR	MODE	TACTCNT
Miami-Dade	2015	RIDE	10
Miami-Dade	2015	RIDE	69
Miami-Dade	2015	RIDE	4
Miami-Dade	2015	RIDE	121
Miami-Dade	2015	RIDE	128
Miami-Dade	2015	RIDE	6
Miami-Dade	2015	RIDE	173
Miami-Dade	2015	RIDE	119
Miami-Dade	2015	RIDE	13
Miami-Dade	2015	RIDE	102
Miami-Dade	2015	RIDE	120
Miami-Dade	2015	RIDE	11
Miami-Dade	2015	RIDE	2
Miami-Dade	2015	RIDE	13
Miami-Dade	2015	RIDE	8
Miami-Dade	2015	RIDE	214
Miami-Dade	2015	RIDE	13
Miami-Dade	2015	RIDE	196
Miami-Dade	2015	RIDE	1
Miami-Dade	2015	RIDE	195
Miami-Dade	2015	RIDE	5
Miami-Dade	2015	RIDE	202
Miami-Dade	2015	RIDE	7
Miami-Dade	2015	RIDE	1
Miami-Dade	2015	RIDE	388
Miami-Dade	2015	RIDE	8
Miami-Dade	2015	RIDE	399
Miami-Dade	2015	RIDE	100
Miami-Dade	2015	RIDE	70
Miami-Dade	2015	RIDE	501
Miami-Dade	2015	RIDE	487
Miami-Dade	2015	RIDE	473
Miami-Dade	2015	RIDE	12
Miami-Dade	2015	RIDE	525
Miami-Dade	2015	RIDE	610
Miami-Dade	2015	RIDE	700
Miami-Dade	2015	RIDE	111
Miami-Dade	2015	RIDE	5
Miami-Dade	2015	RIDE	142
Miami-Dade	2015	RIDE	1
Miami-Dade	2015	RIDE	10
Miami-Dade	2015	RIDE	60
Miami-Dade	2015	RIDE	203
Miami-Dade	2015	RIDE	10
Miami-Dade	2015	RIDE	8
Miami-Dade	2015	RIDE	369
Miami-Dade	2015	RIDE	3
Miami-Dade	2015	RIDE	5
Miami-Dade	2015	RIDE	7
Miami-Dade	2015	RIDE	64
Miami-Dade	2015	RIDE	12

CNTYNM	YEAR	MODE	TACTCNT
Miami-Dade	2015	RIDE	2
Miami-Dade	2015	RIDE	8
Miami-Dade	2015	RIDE	367
Miami-Dade	2015	RIDE	149
Miami-Dade	2015	RIDE	5
Miami-Dade	2015	RIDE	124
Miami-Dade	2015	RIDE	149
Miami-Dade	2015	RIDE	184
Miami-Dade	2015	RIDE	7
Miami-Dade	2015	RIDE	151
Miami-Dade	2015	RIDE	159
Miami-Dade	2015	RIDE	11
Miami-Dade	2015	RIDE	147
Miami-Dade	2015	RIDE	161
Miami-Dade	2015	RIDE	366
Miami-Dade	2015	RIDE	167
Miami-Dade	2015	RIDE	181
Miami-Dade	2015	RIDE	194
Miami-Dade	2015	RIDE	6
Miami-Dade	2015	RIDE	74
Miami-Dade	2015	RIDE	385
Miami-Dade	2015	RIDE	217
Miami-Dade	2015	RIDE	1
Miami-Dade	2015	RIDE	7
Miami-Dade	2015	RIDE	12
Miami-Dade	2015	RIDE	3
Miami-Dade	2015	RIDE	6
Miami-Dade	2015	RIDE	2
Miami-Dade	2015	RIDE	19
Miami-Dade	2015	RIDE	17
Miami-Dade	2015	RIDE	384
Miami-Dade	2015	RIDE	6
Miami-Dade	2015	RIDE	4
Miami-Dade	2015	RIDE	1
Miami-Dade	2015	RIDE	8
Miami-Dade	2015	RIDE	4
Miami-Dade	2015	RIDE	1
Miami-Dade	2015	RIDE	458
Miami-Dade	2015	RIDE	234
Miami-Dade	2015	RIDE	264
Miami-Dade	2015	RIDE	212
Miami-Dade	2015	RIDE	209
Miami-Dade	2015	RIDE	35
Miami-Dade	2015	RIDE	173
Miami-Dade	2015	RIDE	5
Miami-Dade	2015	RIDE	166
Miami-Dade	2015	RIDE	168
Miami-Dade	2015	RIDE	3
Miami-Dade	2015	RIDE	170
Miami-Dade	2015	RIDE	174
Miami-Dade	2015	RIDE	360

CNTYNM	YEAR	MODE	TACTCNT
Miami-Dade	2015	RIDE	85
Miami-Dade	2015	RIDE	64
Miami-Dade	2015	RIDE	37
Miami-Dade	2015	RIDE	5
Miami-Dade	2015	RIDE	2
Miami-Dade	2015	RIDE	202
Miami-Dade	2015	RIDE	153
Miami-Dade	2015	RIDE	10
Miami-Dade	2015	RIDE	4
Miami-Dade	2015	RIDE	191
Miami-Dade	2015	RIDE	10
Miami-Dade	2015	RIDE	12
Miami-Dade	2015	RIDE	13
Miami-Dade	2015	RIDE	9
Miami-Dade	2015	RIDE	13
Miami-Dade	2015	RIDE	334
Miami-Dade	2015	RIDE	188
Miami-Dade	2015	RIDE	1
Miami-Dade	2015	RIDE	10
Miami-Dade	2015	RIDE	8
Miami-Dade	2015	RIDE	14
Miami-Dade	2015	RIDE	1
Miami-Dade	2015	RIDE	9
Miami-Dade	2015	RIDE	3
Miami-Dade	2015	RIDE	10
Miami-Dade	2015	RIDE	2
Miami-Dade	2015	RIDE	328
Miami-Dade	2015	RIDE	31
Miami-Dade	2015	RIDE	1
Miami-Dade	2015	RIDE	1
Miami-Dade	2015	RIDE	12
Miami-Dade	2015	RIDE	8
Miami-Dade	2015	RIDE	194
Miami-Dade	2015	RIDE	2
Miami-Dade	2015	RIDE	3
Miami-Dade	2015	RIDE	195
Miami-Dade	2015	RIDE	2
Miami-Dade	2015	RIDE	7
Miami-Dade	2015	RIDE	3
Miami-Dade	2015	RIDE	2
Miami-Dade	2015	RIDE	197
Miami-Dade	2015	RIDE	5
Miami-Dade	2015	RIDE	2
Miami-Dade	2015	RIDE	12
Miami-Dade	2015	RIDE	5
Miami-Dade	2015	RIDE	9
Miami-Dade	2015	RIDE	3
Miami-Dade	2015	RIDE	2
Miami-Dade	2015	RIDE	1
Miami-Dade	2015	RIDE	7
Miami-Dade	2015	RIDE	4

CNTYNM	YEAR	MODE	TACTCNT
Miami-Dade	2015	RIDE	2
Miami-Dade	2015	RIDE	1
Miami-Dade	2015	RIDE	1
Miami-Dade	2015	RIDE	1504
Miami-Dade	2015	RIDE	8
Miami-Dade	2015	RIDE	6
Miami-Dade	2015	RIDE	1403
Miami-Dade	2015	RIDE	2
Miami-Dade	2015	RIDE	1428
Miami-Dade	2015	RIDE	27
Miami-Dade	2015	RIDE	45
Miami-Dade	2015	RIDE	1481
Miami-Dade	2015	RIDE	7
Miami-Dade	2015	RIDE	1333
Miami-Dade	2015	RIDE	19
Miami-Dade	2015	RIDE	7
Miami-Dade	2015	RIDE	33
Miami-Dade	2015	RIDE	1332
Miami-Dade	2015	RIDE	1344
Miami-Dade	2015	RIDE	7
Miami-Dade	2015	RIDE	1362
Miami-Dade	2015	RIDE	12
Miami-Dade	2015	RIDE	1428
Miami-Dade	2015	RIDE	1
Miami-Dade	2015	RIDE	1480
Miami-Dade	2015	RIDE	1544
Miami-Dade	2015	RIDE	21
Miami-Dade	2015	RIDE	1510
Miami-Dade	2015	RIDE	4
Miami-Dade	2015	RIDE	1785
Miami-Dade	2015	RIDE	1
Miami-Dade	2015	RIDE	1625
Miami-Dade	2015	RIDE	33
Miami-Dade	2015	RIDE	1677
Miami-Dade	2015	RIDE	2
Miami-Dade	2015	RIDE	3
Miami-Dade	2015	RIDE	2
Miami-Dade	2015	RIDE	1
Miami-Dade	2015	RIDE	417
Miami-Dade	2015	RIDE	2
Miami-Dade	2015	RIDE	3
Miami-Dade	2015	RIDE	2
Miami-Dade	2015	RIDE	20
Miami-Dade	2015	RIDE	8
Miami-Dade	2015	RIDE	6
Miami-Dade	2015	RIDE	7
Miami-Dade	2015	RIDE	27
Miami-Dade	2015	RIDE	1
Miami-Dade	2015	RIDE	2
Miami-Dade	2015	RIDE	2
Miami-Dade	2015	RIDE	315

CNTYNM	YEAR	MODE	TACTCNT
Miami-Dade	2015	RIDE	2
Miami-Dade	2015	RIDE	2
Miami-Dade	2015	RIDE	2
Miami-Dade	2015	RIDE	4
Miami-Dade	2015	RIDE	23
Miami-Dade	2015	RIDE	22
Miami-Dade	2015	RIDE	1
Miami-Dade	2015	RIDE	5
Miami-Dade	2015	RIDE	21
Miami-Dade	2015	RIDE	21
Miami-Dade	2015	RIDE	2
Miami-Dade	2015	RIDE	6
Miami-Dade	2015	RIDE	328
Miami-Dade	2015	RIDE	1
Miami-Dade	2015	RIDE	12
Miami-Dade	2015	RIDE	8
Miami-Dade	2015	RIDE	461
Miami-Dade	2015	RIDE	1
Miami-Dade	2015	RIDE	1
Miami-Dade	2015	RIDE	2
Miami-Dade	2015	RIDE	14
Miami-Dade	2015	RIDE	2
Miami-Dade	2015	RIDE	1
Miami-Dade	2015	RIDE	3
Miami-Dade	2015	RIDE	22
Miami-Dade	2015	RIDE	3
Miami-Dade	2015	RIDE	33
Miami-Dade	2015	RIDE	1
Miami-Dade	2015	RIDE	455
Miami-Dade	2015	RIDE	8
Miami-Dade	2015	RIDE	23
Miami-Dade	2015	RIDE	2
Miami-Dade	2015	RIDE	441
Miami-Dade	2015	RIDE	3
Miami-Dade	2015	RIDE	7
Miami-Dade	2015	RIDE	6
Miami-Dade	2015	RIDE	18
Miami-Dade	2015	RIDE	23
Miami-Dade	2015	RIDE	459
Miami-Dade	2015	RIDE	1
Miami-Dade	2015	RIDE	13
Miami-Dade	2015	RIDE	340
Miami-Dade	2015	RIDE	706
Miami-Dade	2015	RIDE	525
Miami-Dade	2015	RIDE	765
Miami-Dade	2015	RIDE	457
Miami-Dade	2015	RIDE	23
Miami-Dade	2015	RIDE	873
Miami-Dade	2015	RIDE	10
Miami-Dade	2015	RIDE	838
Miami-Dade	2015	RIDE	11

CNTYNM	YEAR	MODE	TACTCNT
Miami-Dade	2015	RIDE	744
Miami-Dade	2015	RIDE	379
Miami-Dade	2015	RIDE	382
Miami-Dade	2015	RIDE	357
Miami-Dade	2015	RIDE	140
Miami-Dade	2015	RIDE	115
Miami-Dade	2015	RIDE	93
Miami-Dade	2015	RIDE	116
Miami-Dade	2015	RIDE	108
Miami-Dade	2015	RIDE	117
Miami-Dade	2015	RIDE	118
Miami-Dade	2015	RIDE	119
Miami-Dade	2015	RIDE	47
Miami-Dade	2015	RIDE	216
Miami-Dade	2015	RIDE	102
Miami-Dade	2015	RIDE	9
Miami-Dade	2015	RIDE	35
Miami-Dade	2015	RIDE	38
Miami-Dade	2015	RIDE	36
Miami-Dade	2015	RIDE	519
Miami-Dade	2015	RIDE	3
Miami-Dade	2015	RIDE	1
Miami-Dade	2015	RIDE	30
Miami-Dade	2015	RIDE	11
Miami-Dade	2015	RIDE	33
Miami-Dade	2015	RIDE	22
Miami-Dade	2015	RIDE	78
Miami-Dade	2015	RIDE	19
Miami-Dade	2015	RIDE	336
Miami-Dade	2015	RIDE	272
Miami-Dade	2015	RIDE	22
Miami-Dade	2015	RIDE	176
Miami-Dade	2015	RIDE	559
Miami-Dade	2015	RIDE	16
Miami-Dade	2015	RIDE	7
Miami-Dade	2015	RIDE	43
Miami-Dade	2015	RIDE	75
Miami-Dade	2015	RIDE	5
Miami-Dade	2015	RIDE	4
Miami-Dade	2015	RIDE	5
Miami-Dade	2015	RIDE	2
Miami-Dade	2015	RIDE	2
Miami-Dade	2015	RIDE	884
Miami-Dade	2015	RIDE	6
Miami-Dade	2015	RIDE	4
Miami-Dade	2015	RIDE	12
Miami-Dade	2015	RIDE	2
Miami-Dade	2015	RIDE	5
Miami-Dade	2015	RIDE	1
Miami-Dade	2015	RIDE	5
Miami-Dade	2015	RIDE	19

CNTYNM	YEAR	MODE	TACTCNT
Miami-Dade	2015	RIDE	24
Miami-Dade	2015	RIDE	4
Miami-Dade	2015	RIDE	51
Miami-Dade	2015	RIDE	2
Miami-Dade	2015	RIDE	2
Miami-Dade	2015	RIDE	2
Miami-Dade	2015	RIDE	12
Miami-Dade	2015	RIDE	11
Miami-Dade	2015	RIDE	1
Miami-Dade	2015	RIDE	1
Miami-Dade	2015	RIDE	3
Miami-Dade	2015	RIDE	6
Miami-Dade	2015	RIDE	10
Miami-Dade	2015	RIDE	9
Miami-Dade	2015	RIDE	2
Miami-Dade	2015	RIDE	5
Miami-Dade	2015	RIDE	9
Miami-Dade	2015	RIDE	1
Miami-Dade	2015	RIDE	4
Miami-Dade	2015	RIDE	231
Miami-Dade	2015	RIDE	212
Miami-Dade	2015	RIDE	91
Miami-Dade	2015	RIDE	196
Miami-Dade	2015	RIDE	1
Miami-Dade	2015	RIDE	2
Miami-Dade	2015	RIDE	4
Miami-Dade	2015	RIDE	3
Miami-Dade	2015	RIDE	3
Miami-Dade	2015	RIDE	2
Miami-Dade	2015	RIDE	58
Miami-Dade	2015	RIDE	2
Miami-Dade	2015	RIDE	135
Miami-Dade	2015	RIDE	215
Miami-Dade	2015	RIDE	126
Miami-Dade	2015	RIDE	240
Miami-Dade	2015	RIDE	227
Miami-Dade	2015	RIDE	189
Miami-Dade	2015	RIDE	190
Miami-Dade	2015	RIDE	231
Miami-Dade	2015	RIDE	23
Miami-Dade	2015	RIDE	5
Miami-Dade	2015	RIDE	52
Miami-Dade	2015	RIDE	205
Miami-Dade	2015	RIDE	52
Miami-Dade	2015	RIDE	114
Miami-Dade	2015	RIDE	155
Miami-Dade	2015	RIDE	13
Miami-Dade	2015	RIDE	15
Miami-Dade	2015	RIDE	2
Miami-Dade	2015	RIDE	129
Miami-Dade	2015	RIDE	185

CNTYNM	YEAR	MODE	TACTCNT
Miami-Dade	2015	RIDE	113
Miami-Dade	2015	RIDE	94
Miami-Dade	2015	RIDE	5
Miami-Dade	2015	RIDE	5
Miami-Dade	2015	RIDE	79
Miami-Dade	2015	RIDE	1
Miami-Dade	2015	RIDE	28
Miami-Dade	2015	RIDE	15
Miami-Dade	2015	RIDE	86
Miami-Dade	2015	RIDE	97
Miami-Dade	2015	RIDE	9
Miami-Dade	2015	RIDE	2
Miami-Dade	2015	RIDE	86
Miami-Dade	2015	RIDE	23
Miami-Dade	2015	RIDE	109
Miami-Dade	2015	RIDE	8
Miami-Dade	2015	RIDE	105
Miami-Dade	2015	RIDE	234
Miami-Dade	2015	RIDE	67
Miami-Dade	2015	RIDE	76
Miami-Dade	2015	RIDE	77
Miami-Dade	2015	RIDE	212
Miami-Dade	2015	RIDE	169
Miami-Dade	2015	RIDE	101
Miami-Dade	2015	RIDE	93
Miami-Dade	2015	RIDE	4
Miami-Dade	2015	RIDE	68
Miami-Dade	2015	RIDE	5
Miami-Dade	2015	RIDE	3
Miami-Dade	2015	RIDE	9
Miami-Dade	2015	RIDE	207
Miami-Dade	2015	RIDE	4
Miami-Dade	2015	RIDE	121
Miami-Dade	2015	RIDE	4
Miami-Dade	2015	RIDE	451
Miami-Dade	2015	RIDE	7
Miami-Dade	2015	RIDE	28
Miami-Dade	2015	RIDE	1778
Miami-Dade	2015	RIDE	1747
Miami-Dade	2015	RIDE	1629
Miami-Dade	2015	RIDE	1624
Miami-Dade	2015	RIDE	1641
Miami-Dade	2015	RIDE	1565
Miami-Dade	2015	RIDE	1623
Miami-Dade	2015	RIDE	1698
Miami-Dade	2015	RIDE	12
Miami-Dade	2015	RIDE	8
Miami-Dade	2015	RIDE	488
Miami-Dade	2015	RIDE	8
Miami-Dade	2015	RIDE	9
Miami-Dade	2015	RIDE	1527

CNTYNM	YEAR	MODE	TACTCNT
Miami-Dade	2015	RIDE	44
Miami-Dade	2015	RIDE	1627
Miami-Dade	2015	RIDE	17
Miami-Dade	2015	RIDE	9
Miami-Dade	2015	RIDE	19
Miami-Dade	2015	RIDE	356
Miami-Dade	2015	RIDE	19
Miami-Dade	2015	RIDE	2
Miami-Dade	2015	RIDE	1413
Miami-Dade	2015	RIDE	7
Miami-Dade	2015	RIDE	544
Miami-Dade	2015	RIDE	489
Miami-Dade	2015	RIDE	418
Miami-Dade	2015	RIDE	407
Miami-Dade	2015	RIDE	9
Miami-Dade	2015	RIDE	499
Miami-Dade	2015	RIDE	110
Miami-Dade	2015	RIDE	16
Miami-Dade	2015	RIDE	19
Miami-Dade	2015	RIDE	400
Miami-Dade	2015	RIDE	1
Miami-Dade	2015	RIDE	312
Miami-Dade	2015	RIDE	49
Miami-Dade	2015	RIDE	402
Miami-Dade	2015	RIDE	41
Miami-Dade	2015	RIDE	4
Miami-Dade	2015	RIDE	40
Miami-Dade	2015	RIDE	41
Miami-Dade	2015	RIDE	43
Miami-Dade	2015	RIDE	44
Miami-Dade	2015	RIDE	3
Miami-Dade	2015	RIDE	42
Miami-Dade	2015	RIDE	48
Miami-Dade	2015	RIDE	2
Miami-Dade	2015	RIDE	76
Miami-Dade	2015	RIDE	1
Miami-Dade	2015	RIDE	1
Miami-Dade	2015	RIDE	1306
Miami-Dade	2015	RIDE	493
Miami-Dade	2015	RIDE	538
Miami-Dade	2015	RIDE	5
Miami-Dade	2015	RIDE	13
Miami-Dade	2015	RIDE	120
Miami-Dade	2015	RIDE	69
Miami-Dade	2015	RIDE	1
Miami-Dade	2015	RIDE	1
Miami-Dade	2015	RIDE	1
Miami-Dade	2015	RIDE	1
Miami-Dade	2015	RIDE	7
Miami-Dade	2015	RIDE	427
Miami-Dade	2015	RIDE	1

CNTYNM	YEAR	MODE	TACTCNT
Miami-Dade	2015	RIDE	1
Miami-Dade	2015	RIDE	9
Miami-Dade	2015	RIDE	1
Miami-Dade	2015	RIDE	180
Miami-Dade	2015	RIDE	866
Miami-Dade	2015	RIDE	139
Miami-Dade	2015	RIDE	164
Miami-Dade	2015	RIDE	232
Miami-Dade	2015	RIDE	219
Miami-Dade	2015	RIDE	602
Miami-Dade	2015	RIDE	592
Miami-Dade	2015	RIDE	71
Miami-Dade	2015	RIDE	87
Miami-Dade	2015	RIDE	110
Miami-Dade	2015	RIDE	73
Miami-Dade	2015	RIDE	197
Miami-Dade	2015	RIDE	1
Miami-Dade	2015	RIDE	52
Miami-Dade	2015	RIDE	34
Miami-Dade	2015	RIDE	33
Miami-Dade	2015	RIDE	31
Miami-Dade	2015	RIDE	42
Miami-Dade	2015	RIDE	4
Miami-Dade	2015	RIDE	1
Miami-Dade	2015	RIDE	1
Miami-Dade	2015	RIDE	2
Miami-Dade	2015	RIDE	59
Miami-Dade	2015	RIDE	66
Miami-Dade	2015	RIDE	49
Miami-Dade	2015	RIDE	31
Miami-Dade	2015	RIDE	20
Miami-Dade	2015	RIDE	8
Miami-Dade	2015	RIDE	4
Miami-Dade	2015	RIDE	51
Miami-Dade	2015	RIDE	32
Miami-Dade	2015	RIDE	44
Miami-Dade	2015	RIDE	52
Miami-Dade	2015	RIDE	50
Miami-Dade	2015	RIDE	62
Miami-Dade	2015	RIDE	26
Miami-Dade	2015	RIDE	10
Miami-Dade	2015	RIDE	8
Miami-Dade	2015	RIDE	65
Miami-Dade	2015	RIDE	65
Miami-Dade	2015	RIDE	70
Miami-Dade	2015	RIDE	56
Miami-Dade	2015	RIDE	59
Miami-Dade	2015	RIDE	3
Miami-Dade	2015	RIDE	57
Miami-Dade	2015	RIDE	58
Miami-Dade	2015	RIDE	40

CNTYNM	YEAR	MODE	TACTCNT
Miami-Dade	2015	RIDE	382
Miami-Dade	2015	RIDE	54
Miami-Dade	2015	RIDE	880
Miami-Dade	2015	RIDE	206
Miami-Dade	2015	RIDE	152
Miami-Dade	2015	RIDE	149
Miami-Dade	2015	RIDE	113
Miami-Dade	2015	RIDE	117
Miami-Dade	2015	RIDE	111
Miami-Dade	2015	RIDE	421
Miami-Dade	2015	RIDE	431
Miami-Dade	2015	RIDE	52
Miami-Dade	2015	RIDE	59
Miami-Dade	2015	RIDE	280
Miami-Dade	2015	RIDE	166
Miami-Dade	2015	RIDE	148
Miami-Dade	2015	RIDE	1062
Miami-Dade	2015	RIDE	1758
Miami-Dade	2015	RIDE	1578
Miami-Dade	2015	RIDE	1535
Miami-Dade	2015	RIDE	40
Miami-Dade	2015	RIDE	4
Miami-Dade	2015	RIDE	38
Miami-Dade	2015	RIDE	409
Miami-Dade	2015	RIDE	484
Miami-Dade	2015	RIDE	3
Miami-Dade	2015	RIDE	4
Miami-Dade	2015	RIDE	19
Miami-Dade	2015	RIDE	11
Miami-Dade	2015	RIDE	34
Miami-Dade	2015	RIDE	31
Miami-Dade	2015	RIDE	325
Miami-Dade	2015	RIDE	292
Miami-Dade	2015	RIDE	160
Miami-Dade	2015	RIDE	4
Miami-Dade	2015	RIDE	2
Miami-Dade	2015	RIDE	2
Miami-Dade	2015	RIDE	42
Miami-Dade	2015	RIDE	5331
Miami-Dade	2015	RIDE	341
Miami-Dade	2015	RIDE	6
Miami-Dade	2015	RIDE	9
Miami-Dade	2015	RIDE	298
Miami-Dade	2015	RIDE	4
Miami-Dade	2015	RIDE	116
Miami-Dade	2015	RIDE	119
Miami-Dade	2015	RIDE	140
Miami-Dade	2015	RIDE	154
Miami-Dade	2015	RIDE	141
Miami-Dade	2015	RIDE	206
Miami-Dade	2015	RIDE	180

CNTYNM	YEAR	MODE	TACTCNT
Miami-Dade	2015	RIDE	66
Miami-Dade	2015	RIDE	88
Miami-Dade	2015	RIDE	89
Miami-Dade	2015	RIDE	123
Miami-Dade	2015	RIDE	125
Miami-Dade	2015	RIDE	80
Miami-Dade	2015	RIDE	74
Miami-Dade	2015	RIDE	196
Miami-Dade	2015	RIDE	211
Miami-Dade	2015	RIDE	406
Miami-Dade	2015	RIDE	410
Miami-Dade	2015	RIDE	413
Miami-Dade	2015	RIDE	235
Miami-Dade	2015	RIDE	164
Miami-Dade	2015	RIDE	154
Miami-Dade	2015	RIDE	171
Miami-Dade	2015	RIDE	392
Miami-Dade	2015	RIDE	411
Miami-Dade	2015	RIDE	414
Miami-Dade	2015	RIDE	117
Miami-Dade	2015	RIDE	126
Miami-Dade	2015	RIDE	208
Miami-Dade	2015	RIDE	192
Miami-Dade	2015	RIDE	366
Miami-Dade	2015	RIDE	287
Miami-Dade	2015	RIDE	221
Miami-Dade	2015	RIDE	268
Miami-Dade	2015	RIDE	538
Miami-Dade	2015	RIDE	584
Miami-Dade	2015	RIDE	268
Miami-Dade	2015	RIDE	210
Miami-Dade	2015	RIDE	1798
Miami-Dade	2015	RIDE	1799
Miami-Dade	2015	RIDE	531
Miami-Dade	2015	RIDE	526
Miami-Dade	2015	RIDE	1606
Miami-Dade	2015	RIDE	1583
Miami-Dade	2015	RIDE	208
Miami-Dade	2015	RIDE	147
Miami-Dade	2015	RIDE	144
Miami-Dade	2015	RIDE	322
Miami-Dade	2015	RIDE	930
Miami-Dade	2015	RIDE	1054
Miami-Dade	2015	RIDE	665
Miami-Dade	2015	RIDE	625
Miami-Dade	2015	RIDE	530
Miami-Dade	2015	RIDE	501
Miami-Dade	2015	RIDE	595
Miami-Dade	2015	RIDE	441
Miami-Dade	2015	RIDE	449
Miami-Dade	2015	RIDE	450

CNTYNM	YEAR	MODE	TACTCNT
Miami-Dade	2015	RIDE	440
Miami-Dade	2015	RIDE	548
Miami-Dade	2015	RIDE	287
Miami-Dade	2015	RIDE	280
Miami-Dade	2015	RIDE	299
Miami-Dade	2015	RIDE	304
Miami-Dade	2015	RIDE	29
Miami-Dade	2015	RIDE	21
Miami-Dade	2015	RIDE	304
Miami-Dade	2015	RIDE	212
Miami-Dade	2015	RIDE	282
Miami-Dade	2015	RIDE	87
Miami-Dade	2015	RIDE	106
Miami-Dade	2015	RIDE	96
Miami-Dade	2015	RIDE	417
Miami-Dade	2015	RIDE	87
Miami-Dade	2015	RIDE	80
Miami-Dade	2015	RIDE	47
Miami-Dade	2015	RIDE	47
Miami-Dade	2015	RIDE	85
Miami-Dade	2015	RIDE	91
Miami-Dade	2015	RIDE	11
Miami-Dade	2015	RIDE	12
Miami-Dade	2015	RIDE	68
Miami-Dade	2015	RIDE	84
Miami-Dade	2015	RIDE	102
Miami-Dade	2015	RIDE	26
Miami-Dade	2015	RIDE	37
Miami-Dade	2015	RIDE	137
Miami-Dade	2015	RIDE	88
Miami-Dade	2015	RIDE	129
Miami-Dade	2015	RIDE	71
Miami-Dade	2015	RIDE	73
Miami-Dade	2015	RIDE	37
Miami-Dade	2015	RIDE	74
Miami-Dade	2015	RIDE	58
Miami-Dade	2015	RIDE	56
Miami-Dade	2015	RIDE	62
Miami-Dade	2015	RIDE	40
Miami-Dade	2015	RIDE	120
Miami-Dade	2015	RIDE	215
Miami-Dade	2015	RIDE	232
Miami-Dade	2015	RIDE	414
Miami-Dade	2015	RIDE	382
Miami-Dade	2015	RIDE	309
Miami-Dade	2015	RIDE	1
Miami-Dade	2015	RIDE	1186
Miami-Dade	2015	RIDE	3
Miami-Dade	2015	RIDE	39
Miami-Dade	2015	RIDE	33
Miami-Dade	2015	RIDE	682

CNTYNM	YEAR	MODE	TACTCNT
Miami-Dade	2015	RIDE	375
Miami-Dade	2015	RIDE	256
Miami-Dade	2015	RIDE	9
Miami-Dade	2015	RIDE	8
Miami-Dade	2015	RIDE	1
Miami-Dade	2015	RIDE	2
Miami-Dade	2015	RIDE	2
Miami-Dade	2015	RIDE	260
Miami-Dade	2015	RIDE	269
Miami-Dade	2015	RIDE	137
Miami-Dade	2015	RIDE	30
Miami-Dade	2015	RIDE	7
Miami-Dade	2015	RIDE	6
Miami-Dade	2015	RIDE	102
Miami-Dade	2015	RIDE	107
Miami-Dade	2015	RIDE	8
Miami-Dade	2015	RIDE	97
Miami-Dade	2015	RIDE	18
Miami-Dade	2015	RIDE	5
Miami-Dade	2015	RIDE	2
Miami-Dade	2015	RIDE	3
Miami-Dade	2015	RIDE	10
Miami-Dade	2015	RIDE	1
Miami-Dade	2015	RIDE	5
Miami-Dade	2015	RIDE	4
Miami-Dade	2015	RIDE	3
Miami-Dade	2015	RIDE	6
Miami-Dade	2015	RIDE	4
Miami-Dade	2015	RIDE	15
Miami-Dade	2015	RIDE	4
Miami-Dade	2015	RIDE	7
Miami-Dade	2015	RIDE	19
Miami-Dade	2015	RIDE	20
Miami-Dade	2015	RIDE	10
Miami-Dade	2015	RIDE	9
Miami-Dade	2015	RIDE	15
Miami-Dade	2015	RIDE	18
Miami-Dade	2015	RIDE	28
Miami-Dade	2015	RIDE	5
Miami-Dade	2015	RIDE	2
Miami-Dade	2015	RIDE	24
Miami-Dade	2015	RIDE	6
Miami-Dade	2015	RIDE	6
Miami-Dade	2015	RIDE	2
Miami-Dade	2015	RIDE	22
Miami-Dade	2015	RIDE	2
Miami-Dade	2015	RIDE	2
Miami-Dade	2015	RIDE	1
Miami-Dade	2015	RIDE	1
Miami-Dade	2015	RIDE	2
Miami-Dade	2015	RIDE	5

CNTYNM	YEAR	MODE	TACTCNT
Miami-Dade	2015	RIDE	1
Miami-Dade	2015	RIDE	3
Miami-Dade	2015	RIDE	1
Miami-Dade	2015	RIDE	1
Miami-Dade	2015	RIDE	6
Miami-Dade	2015	RIDE	1
Miami-Dade	2015	RIDE	1
Miami-Dade	2015	RIDE	3
Miami-Dade	2015	RIDE	3
Miami-Dade	2015	RIDE	1
Miami-Dade	2015	RIDE	1
Miami-Dade	2015	RIDE	1
Miami-Dade	2015	RIDE	2
Miami-Dade	2015	RIDE	4
Miami-Dade	2015	RIDE	5
Miami-Dade	2015	RIDE	5
Miami-Dade	2015	RIDE	6
Miami-Dade	2015	RIDE	4
Miami-Dade	2015	RIDE	2
Miami-Dade	2015	RIDE	3
Miami-Dade	2015	RIDE	3
Miami-Dade	2015	RIDE	4
Miami-Dade	2015	RIDE	3
Miami-Dade	2015	RIDE	3
Miami-Dade	2015	RIDE	122
Miami-Dade	2015	RIDE	82
Miami-Dade	2015	RIDE	5
Miami-Dade	2015	RIDE	1
Miami-Dade	2015	RIDE	10
Miami-Dade	2015	RIDE	1
Miami-Dade	2015	RIDE	1
Miami-Dade	2015	RIDE	3
Miami-Dade	2015	RIDE	2
Miami-Dade	2015	RIDE	1
Miami-Dade	2015	RIDE	3
Miami-Dade	2015	RIDE	2
Miami-Dade	2015	RIDE	3
Miami-Dade	2015	RIDE	1
Miami-Dade	2015	RIDE	1
Miami-Dade	2015	RIDE	2
Miami-Dade	2015	RIDE	1
Miami-Dade	2015	RIDE	22
Miami-Dade	2015	RIDE	4
Miami-Dade	2015	RIDE	1037
Miami-Dade	2015	RIDE	864
Miami-Dade	2015	RIDE	312
Miami-Dade	2015	RIDE	340
Miami-Dade	2015	RIDE	3
Miami-Dade	2015	RIDE	377
Miami-Dade	2015	RIDE	385
Miami-Dade	2015	RIDE	334

CNTYNM	YEAR	MODE	TACTCNT
Miami-Dade	2015	RIDE	332
Miami-Dade	2015	RIDE	13
Miami-Dade	2015	RIDE	11
Miami-Dade	2015	RIDE	45
Miami-Dade	2015	RIDE	45
Miami-Dade	2015	RIDE	17
Miami-Dade	2015	RIDE	230
Miami-Dade	2015	RIDE	226
Miami-Dade	2015	RIDE	222
Miami-Dade	2015	RIDE	287
Miami-Dade	2015	RIDE	287
Miami-Dade	2015	RIDE	291
Miami-Dade	2015	RIDE	2
Miami-Dade	2015	RIDE	3
Miami-Dade	2015	RIDE	157
Miami-Dade	2015	RIDE	131
Miami-Dade	2015	RIDE	7
Miami-Dade	2015	RIDE	1768
Miami-Dade	2015	RIDE	1710
Miami-Dade	2015	RIDE	1497
Miami-Dade	2015	RIDE	1400
Miami-Dade	2015	RIDE	5
Miami-Dade	2015	RIDE	1679
Miami-Dade	2015	RIDE	1685
Miami-Dade	2015	RIDE	1470
Miami-Dade	2015	RIDE	1473
Miami-Dade	2015	RIDE	13
Miami-Dade	2015	RIDE	330
Miami-Dade	2015	RIDE	752
Miami-Dade	2015	RIDE	35
Miami-Dade	2015	RIDE	320
Miami-Dade	2015	RIDE	293
Miami-Dade	2015	RIDE	6
Miami-Dade	2015	RIDE	351
Miami-Dade	2015	RIDE	161
Miami-Dade	2015	RIDE	19
Miami-Dade	2015	RIDE	76
Miami-Dade	2015	RIDE	270
Miami-Dade	2015	RIDE	6
Miami-Dade	2015	RIDE	312
Miami-Dade	2015	RIDE	272
Miami-Dade	2015	RIDE	77
Miami-Dade	2015	RIDE	74
Miami-Dade	2015	RIDE	6
Miami-Dade	2015	RIDE	294
Miami-Dade	2015	RIDE	54
Miami-Dade	2015	RIDE	48
Miami-Dade	2015	RIDE	13
Miami-Dade	2015	RIDE	13
Miami-Dade	2015	RIDE	1
Miami-Dade	2015	RIDE	54

CNTYNM	YEAR	MODE	TACTCNT
Miami-Dade	2015	RIDE	2
Miami-Dade	2015	RIDE	46
Miami-Dade	2015	RIDE	45
Miami-Dade	2015	RIDE	552
Miami-Dade	2015	RIDE	789
Miami-Dade	2015	RIDE	498
Miami-Dade	2015	RIDE	873
Miami-Dade	2015	RIDE	506
Miami-Dade	2015	RIDE	556
Miami-Dade	2015	RIDE	337
Miami-Dade	2015	RIDE	328
Miami-Dade	2015	RIDE	19
Miami-Dade	2015	RIDE	12
Miami-Dade	2015	RIDE	8
Miami-Dade	2015	RIDE	9
Miami-Dade	2015	RIDE	8
Miami-Dade	2015	RIDE	4
Miami-Dade	2015	RIDE	17
Miami-Dade	2015	RIDE	15
Miami-Dade	2015	RIDE	62
Miami-Dade	2015	RIDE	34
Miami-Dade	2015	RIDE	3
Miami-Dade	2015	RIDE	3
Miami-Dade	2015	RIDE	32
Miami-Dade	2015	RIDE	50
Miami-Dade	2015	RIDE	2
Miami-Dade	2015	RIDE	804
Miami-Dade	2015	RIDE	9
Miami-Dade	2015	RIDE	49
Miami-Dade	2015	RIDE	49
Miami-Dade	2015	RIDE	7
Miami-Dade	2015	RIDE	10
Miami-Dade	2015	RIDE	877
Miami-Dade	2015	RIDE	37
Miami-Dade	2015	RIDE	38
Miami-Dade	2015	RIDE	47
Miami-Dade	2015	RIDE	14
Miami-Dade	2015	RIDE	6
Miami-Dade	2015	RIDE	18
Miami-Dade	2015	RIDE	40
Miami-Dade	2015	RIDE	15
Miami-Dade	2015	RIDE	40
Miami-Dade	2015	RIDE	40
Miami-Dade	2015	RIDE	11
Miami-Dade	2015	RIDE	11
Miami-Dade	2015	RIDE	5
Miami-Dade	2015	RIDE	18
Miami-Dade	2015	RIDE	2
Miami-Dade	2015	RIDE	4
Miami-Dade	2015	RIDE	58
Miami-Dade	2015	RIDE	1

CNTYNM	YEAR	MODE	TACTCNT
Miami-Dade	2015	RIDE	1
Miami-Dade	2015	RIDE	304
Miami-Dade	2015	RIDE	5
Miami-Dade	2015	RIDE	63
Miami-Dade	2015	RIDE	8
Miami-Dade	2015	RIDE	1
Miami-Dade	2015	RIDE	9
Miami-Dade	2015	RIDE	11
Miami-Dade	2015	RIDE	3
Miami-Dade	2015	RIDE	2
Miami-Dade	2015	RIDE	13
Miami-Dade	2015	RIDE	5
Miami-Dade	2015	RIDE	4
Miami-Dade	2015	RIDE	2
Miami-Dade	2015	RIDE	4
Miami-Dade	2015	RIDE	6
Miami-Dade	2015	RIDE	6
Miami-Dade	2015	RIDE	3
Miami-Dade	2015	RIDE	118
Miami-Dade	2015	RIDE	31
Miami-Dade	2015	RIDE	38
Miami-Dade	2015	RIDE	40
Miami-Dade	2015	RIDE	4
Miami-Dade	2015	RIDE	1
Miami-Dade	2015	RIDE	500
Miami-Dade	2015	RIDE	292
Miami-Dade	2015	RIDE	421
Miami-Dade	2015	RIDE	1020
Miami-Dade	2015	RIDE	974
Miami-Dade	2015	RIDE	283
Miami-Dade	2015	RIDE	270
Miami-Dade	2015	RIDE	1598
Miami-Dade	2015	RIDE	1647
Miami-Dade	2015	RIDE	195
Miami-Dade	2015	RIDE	208
Miami-Dade	2015	RIDE	151
Miami-Dade	2015	RIDE	202
Miami-Dade	2015	RIDE	411
Miami-Dade	2015	RIDE	363
Miami-Dade	2015	RIDE	33
Miami-Dade	2015	RIDE	33
Miami-Dade	2015	RIDE	94
Miami-Dade	2015	RIDE	4
Miami-Dade	2015	RIDE	376
Miami-Dade	2015	RIDE	468
Miami-Dade	2015	RIDE	289
Miami-Dade	2015	RIDE	304
Miami-Dade	2015	RIDE	228
Miami-Dade	2015	RIDE	231
Miami-Dade	2015	RIDE	286
Miami-Dade	2015	RIDE	281

CNTYNM	YEAR	MODE	TACTCNT
Miami-Dade	2015	RIDE	27
Miami-Dade	2015	RIDE	33
Miami-Dade	2015	RIDE	94
Miami-Dade	2015	RIDE	97
Miami-Dade	2015	RIDE	155
Miami-Dade	2015	RIDE	194
Miami-Dade	2015	RIDE	1700
Miami-Dade	2015	RIDE	1642
Miami-Dade	2015	RIDE	3
Miami-Dade	2015	RIDE	3
Miami-Dade	2015	RIDE	1761
Miami-Dade	2015	RIDE	1749
Miami-Dade	2015	RIDE	84
Miami-Dade	2015	RIDE	75
Miami-Dade	2015	RIDE	285
Miami-Dade	2015	RIDE	287
Miami-Dade	2015	RIDE	307
Miami-Dade	2015	RIDE	238
Miami-Dade	2015	RIDE	209
Miami-Dade	2015	RIDE	342
Miami-Dade	2015	RIDE	338
Miami-Dade	2015	RIDE	20
Miami-Dade	2015	RIDE	20
Miami-Dade	2015	RIDE	110
Miami-Dade	2015	RIDE	92
Miami-Dade	2015	RIDE	27
Miami-Dade	2015	RIDE	26
Miami-Dade	2015	RIDE	120
Miami-Dade	2015	RIDE	115
Miami-Dade	2015	RIDE	453
Miami-Dade	2015	RIDE	474
Miami-Dade	2015	RIDE	510
Miami-Dade	2015	RIDE	228
Miami-Dade	2015	RIDE	232
Miami-Dade	2015	RIDE	93
Miami-Dade	2015	RIDE	107
Miami-Dade	2015	RIDE	253
Miami-Dade	2015	RIDE	257
Miami-Dade	2015	RIDE	322
Miami-Dade	2015	RIDE	331
Miami-Dade	2015	RIDE	35
Miami-Dade	2015	RIDE	46
Miami-Dade	2015	RIDE	2
Miami-Dade	2015	RIDE	1
Miami-Dade	2015	RIDE	183
Miami-Dade	2015	RIDE	334
Miami-Dade	2015	RIDE	740
Miami-Dade	2015	RIDE	197
Miami-Dade	2015	RIDE	230
Miami-Dade	2015	RIDE	802
Miami-Dade	2015	RIDE	701

CNTYNM	YEAR	MODE	TACTCNT
Miami-Dade	2015	RIDE	10
Miami-Dade	2015	RIDE	729
Miami-Dade	2015	RIDE	658
Miami-Dade	2015	RIDE	676
Miami-Dade	2015	RIDE	42
Miami-Dade	2015	RIDE	20
Miami-Dade	2015	RIDE	2
Miami-Dade	2015	RIDE	2
Miami-Dade	2015	RIDE	227
Miami-Dade	2015	RIDE	288
Miami-Dade	2015	RIDE	85
Miami-Dade	2015	RIDE	112
Miami-Dade	2015	RIDE	2
Miami-Dade	2015	RIDE	1
Miami-Dade	2015	RIDE	271
Miami-Dade	2015	RIDE	6
Miami-Dade	2015	RIDE	7
Miami-Dade	2015	RIDE	2
Miami-Dade	2015	RIDE	2
Miami-Dade	2015	RIDE	20
Miami-Dade	2015	RIDE	141
Miami-Dade	2015	RIDE	121
Miami-Dade	2015	RIDE	106
Miami-Dade	2015	RIDE	198
Miami-Dade	2015	RIDE	295
Miami-Dade	2015	RIDE	10
Miami-Dade	2015	RIDE	10
Miami-Dade	2015	RIDE	11
Miami-Dade	2015	RIDE	5
Miami-Dade	2015	RIDE	1
Miami-Dade	2015	RIDE	3
Miami-Dade	2015	RIDE	15
Miami-Dade	2015	RIDE	4
Miami-Dade	2015	RIDE	1
Miami-Dade	2015	RIDE	6
Miami-Dade	2015	RIDE	4
Miami-Dade	2015	RIDE	4
Miami-Dade	2015	RIDE	12
Miami-Dade	2015	RIDE	1
Miami-Dade	2015	RIDE	8
Miami-Dade	2015	RIDE	12
Miami-Dade	2015	RIDE	1
Miami-Dade	2015	RIDE	4
Miami-Dade	2015	RIDE	9
Miami-Dade	2015	RIDE	3
Miami-Dade	2015	RIDE	9
Miami-Dade	2015	RIDE	4
Miami-Dade	2015	RIDE	26
Miami-Dade	2015	RIDE	5
Miami-Dade	2015	RIDE	5
Miami-Dade	2015	RIDE	2

CNTYNM	YEAR	MODE	TACTCNT
Miami-Dade	2015	RIDE	15
Miami-Dade	2015	RIDE	2
Miami-Dade	2015	RIDE	28
Miami-Dade	2015	RIDE	5
Miami-Dade	2015	RIDE	1
Miami-Dade	2015	RIDE	1
Miami-Dade	2015	RIDE	3
Miami-Dade	2015	RIDE	3
Miami-Dade	2015	RIDE	8
Miami-Dade	2015	RIDE	1
Miami-Dade	2015	RIDE	2
Miami-Dade	2015	RIDE	5
Miami-Dade	2015	RIDE	1
Miami-Dade	2015	RIDE	1
Miami-Dade	2015	RIDE	17
Miami-Dade	2015	RIDE	10
Miami-Dade	2015	RIDE	6
Miami-Dade	2015	RIDE	15
Miami-Dade	2015	RIDE	23
Miami-Dade	2015	RIDE	37
Miami-Dade	2015	RIDE	8
Miami-Dade	2015	RIDE	11
Miami-Dade	2015	RIDE	12
Miami-Dade	2015	RIDE	14
Miami-Dade	2015	RIDE	3
Miami-Dade	2015	RIDE	97
Miami-Dade	2015	RIDE	100
Miami-Dade	2015	RIDE	4
Miami-Dade	2015	RIDE	78
Miami-Dade	2015	RIDE	68
Miami-Dade	2015	RIDE	89
Miami-Dade	2015	RIDE	93
Miami-Dade	2015	RIDE	2
Miami-Dade	2015	RIDE	66
Miami-Dade	2015	RIDE	94
Miami-Dade	2015	RIDE	72
Miami-Dade	2015	RIDE	95
Miami-Dade	2015	RIDE	50
Miami-Dade	2015	RIDE	64
Miami-Dade	2015	RIDE	123
Miami-Dade	2015	RIDE	123
Miami-Dade	2015	RIDE	1
Miami-Dade	2015	RIDE	28
Miami-Dade	2015	RIDE	7
Miami-Dade	2015	RIDE	83
Miami-Dade	2015	RIDE	104
Miami-Dade	2015	RIDE	66
Miami-Dade	2015	RIDE	74
Miami-Dade	2015	RIDE	1
Miami-Dade	2015	RIDE	1
Miami-Dade	2015	RIDE	4

CNTYNM	YEAR	MODE	TACTCNT
Miami-Dade	2015	RIDE	3
Miami-Dade	2015	RIDE	228
Miami-Dade	2015	RIDE	202
Miami-Dade	2015	RIDE	7
Miami-Dade	2015	RIDE	4
Miami-Dade	2015	RIDE	3
Miami-Dade	2015	RIDE	42
Miami-Dade	2015	RIDE	21
Miami-Dade	2015	RIDE	8
Miami-Dade	2015	RIDE	5
Miami-Dade	2015	RIDE	2
Miami-Dade	2015	RIDE	47
Miami-Dade	2015	RIDE	45
Miami-Dade	2015	RIDE	2
Miami-Dade	2015	RIDE	2
Miami-Dade	2015	RIDE	3
Miami-Dade	2015	RIDE	3
Miami-Dade	2015	RIDE	2
Miami-Dade	2015	RIDE	24
Miami-Dade	2015	RIDE	6
Miami-Dade	2015	RIDE	2
Miami-Dade	2015	RIDE	273
Miami-Dade	2015	RIDE	261
Miami-Dade	2015	RIDE	9
Miami-Dade	2015	RIDE	2
Miami-Dade	2015	RIDE	28
Miami-Dade	2015	RIDE	32
Miami-Dade	2015	RIDE	1
Miami-Dade	2015	RIDE	37
Miami-Dade	2015	RIDE	35
Miami-Dade	2015	RIDE	1
Miami-Dade	2015	RIDE	2
Miami-Dade	2015	RIDE	75
Miami-Dade	2015	RIDE	1
Miami-Dade	2015	RIDE	4
Miami-Dade	2015	RIDE	6
Miami-Dade	2015	RIDE	4
Miami-Dade	2015	RIDE	3
Miami-Dade	2015	RIDE	4
Miami-Dade	2015	RIDE	10
Miami-Dade	2015	RIDE	31
Miami-Dade	2015	RIDE	29
Miami-Dade	2015	RIDE	5
Miami-Dade	2015	RIDE	6
Miami-Dade	2015	RIDE	2
Miami-Dade	2015	RIDE	2
Miami-Dade	2015	RIDE	1
Miami-Dade	2015	RIDE	5
Miami-Dade	2015	RIDE	7
Miami-Dade	2015	RIDE	2
Miami-Dade	2015	RIDE	1

CNTYNM	YEAR	MODE	TACTCNT
Miami-Dade	2015	RIDE	1
Miami-Dade	2015	RIDE	2
Miami-Dade	2015	RIDE	2
Miami-Dade	2015	RIDE	1
Miami-Dade	2015	RIDE	3
Miami-Dade	2015	RIDE	2
Miami-Dade	2015	RIDE	1
Miami-Dade	2015	RIDE	2
Miami-Dade	2015	RIDE	1
Miami-Dade	2015	RIDE	4
Miami-Dade	2015	RIDE	5
Miami-Dade	2015	RIDE	3
Miami-Dade	2015	RIDE	1
Miami-Dade	2015	RIDE	3
Miami-Dade	2015	RIDE	2
Miami-Dade	2015	RIDE	4
Miami-Dade	2015	RIDE	1
Miami-Dade	2015	RIDE	1
Miami-Dade	2015	RIDE	1
Miami-Dade	2015	RIDE	5
Miami-Dade	2015	RIDE	5
Miami-Dade	2015	RIDE	3
Miami-Dade	2015	RIDE	5
Miami-Dade	2015	RIDE	3
Miami-Dade	2015	RIDE	4
Miami-Dade	2015	RIDE	5
Miami-Dade	2015	RIDE	9
Miami-Dade	2015	RIDE	9
Miami-Dade	2015	RIDE	5
Miami-Dade	2015	RIDE	2
Miami-Dade	2015	RIDE	3
Miami-Dade	2015	RIDE	2
Miami-Dade	2015	RIDE	5
Miami-Dade	2015	RIDE	3
Miami-Dade	2015	RIDE	2
Miami-Dade	2015	RIDE	1
Miami-Dade	2015	RIDE	3
Miami-Dade	2015	RIDE	1
Miami-Dade	2015	RIDE	2
Miami-Dade	2015	RIDE	2
Miami-Dade	2015	RIDE	1
Miami-Dade	2015	RIDE	2
Miami-Dade	2015	RIDE	6
Miami-Dade	2015	RIDE	7
Miami-Dade	2015	RIDE	94
Miami-Dade	2015	RIDE	95
Miami-Dade	2015	RIDE	3
Miami-Dade	2015	RIDE	1
Miami-Dade	2015	RIDE	5
Miami-Dade	2015	RIDE	4
Miami-Dade	2015	RIDE	1
Miami-Dade	2015	RIDE	15

CNTYNM	YEAR	MODE	TACTCNT
Miami-Dade	2015	RIDE	6
Miami-Dade	2015	RIDE	7
Miami-Dade	2015	RIDE	5
Miami-Dade	2015	RIDE	1
Miami-Dade	2015	RIDE	1
Miami-Dade	2015	RIDE	5
Miami-Dade	2015	RIDE	3
Miami-Dade	2015	RIDE	1
Miami-Dade	2015	RIDE	2
Miami-Dade	2015	RIDE	2
Miami-Dade	2015	RIDE	5
Miami-Dade	2015	RIDE	7
Miami-Dade	2015	RIDE	4
Miami-Dade	2015	RIDE	70
Miami-Dade	2015	RIDE	14
Miami-Dade	2015	RIDE	15
Miami-Dade	2015	RIDE	67
Miami-Dade	2015	RIDE	60
Miami-Dade	2015	RIDE	68
Miami-Dade	2015	RIDE	53
Miami-Dade	2015	RIDE	59
Miami-Dade	2015	RIDE	5
Miami-Dade	2015	RIDE	32
Miami-Dade	2015	RIDE	1
Miami-Dade	2015	RIDE	15
Miami-Dade	2015	RIDE	32
Miami-Dade	2015	RIDE	29
Miami-Dade	2015	RIDE	1
Miami-Dade	2015	RIDE	1
Miami-Dade	2015	RIDE	18
Miami-Dade	2015	RIDE	16
Miami-Dade	2015	RIDE	59
Miami-Dade	2015	RIDE	41
Miami-Dade	2015	RIDE	48
Miami-Dade	2015	RIDE	2
Miami-Dade	2015	RIDE	1
Miami-Dade	2015	RIDE	109
Miami-Dade	2015	RIDE	108
Miami-Dade	2015	RIDE	12
Miami-Dade	2015	RIDE	194
Miami-Dade	2015	RIDE	211
Miami-Dade	2015	RIDE	41
Miami-Dade	2015	RIDE	15
Miami-Dade	2015	RIDE	669
Miami-Dade	2015	RIDE	599
Miami-Dade	2015	RIDE	4
Miami-Dade	2015	RIDE	597
Miami-Dade	2015	RIDE	606
Miami-Dade	2015	RIDE	17
Miami-Dade	2015	RIDE	4
Miami-Dade	2015	RIDE	524

CNTYNM	YEAR	MODE	TACTCNT
Miami-Dade	2015	RIDE	530
Miami-Dade	2015	RIDE	2
Miami-Dade	2015	RIDE	5
Miami-Dade	2015	RIDE	5
Miami-Dade	2015	RIDE	8
Miami-Dade	2015	RIDE	1
Miami-Dade	2015	RIDE	2
Miami-Dade	2015	RIDE	3
Miami-Dade	2015	RIDE	4
Miami-Dade	2015	RIDE	3
Miami-Dade	2015	RIDE	244
Miami-Dade	2015	RIDE	291
Miami-Dade	2015	RIDE	9
Miami-Dade	2015	RIDE	624
Miami-Dade	2015	RIDE	697
Miami-Dade	2015	RIDE	285
Miami-Dade	2015	RIDE	283
Miami-Dade	2015	RIDE	522
Miami-Dade	2015	RIDE	443
Miami-Dade	2015	RIDE	270
Miami-Dade	2015	RIDE	262
Miami-Dade	2015	RIDE	10
Miami-Dade	2015	RIDE	1
Miami-Dade	2015	RIDE	1
Miami-Dade	2015	RIDE	9
Miami-Dade	2015	RIDE	57
Miami-Dade	2015	RIDE	9
Miami-Dade	2015	RIDE	49
Miami-Dade	2015	RIDE	9
Miami-Dade	2015	RIDE	125
Miami-Dade	2015	RIDE	193
Miami-Dade	2015	RIDE	338
Miami-Dade	2015	RIDE	219
Miami-Dade	2015	RIDE	346
Miami-Dade	2015	RIDE	315
Miami-Dade	2015	RIDE	8
Miami-Dade	2015	RIDE	17
Miami-Dade	2015	RIDE	2
Miami-Dade	2015	RIDE	13
Miami-Dade	2015	RIDE	15
Miami-Dade	2015	RIDE	139
Miami-Dade	2015	RIDE	152
Miami-Dade	2015	RIDE	56
Miami-Dade	2015	RIDE	63
Miami-Dade	2015	RIDE	7
Miami-Dade	2015	RIDE	2
Miami-Dade	2015	RIDE	1
Miami-Dade	2015	RIDE	13
Miami-Dade	2015	RIDE	9
Miami-Dade	2015	RIDE	2
Miami-Dade	2015	RIDE	14

CNTYNM	YEAR	MODE	TACTCNT
Miami-Dade	2015	RIDE	4
Miami-Dade	2015	RIDE	12
Miami-Dade	2015	RIDE	17
Miami-Dade	2015	RIDE	15
Miami-Dade	2015	RIDE	19
Miami-Dade	2015	RIDE	13
Miami-Dade	2015	RIDE	13
Miami-Dade	2015	RIDE	5
Miami-Dade	2015	RIDE	29
Miami-Dade	2015	RIDE	40
Miami-Dade	2015	RIDE	4
Miami-Dade	2015	RIDE	2
Miami-Dade	2015	RIDE	3
Miami-Dade	2015	RIDE	1
Miami-Dade	2015	RIDE	137
Miami-Dade	2015	RIDE	128
Miami-Dade	2015	RIDE	319
Miami-Dade	2015	RIDE	421
Miami-Dade	2015	RIDE	10
Miami-Dade	2015	RIDE	1
Miami-Dade	2015	RIDE	18
Miami-Dade	2015	RIDE	2
Miami-Dade	2015	RIDE	1
Miami-Dade	2015	RIDE	18
Miami-Dade	2015	RIDE	284
Miami-Dade	2015	RIDE	284
Miami-Dade	2015	RIDE	317
Miami-Dade	2015	RIDE	260
Miami-Dade	2015	RIDE	277
Miami-Dade	2015	RIDE	271
Miami-Dade	2015	RIDE	29
Miami-Dade	2015	RIDE	45
Miami-Dade	2015	RIDE	60
Miami-Dade	2015	RIDE	49
Miami-Dade	2015	RIDE	14
Miami-Dade	2015	RIDE	16
Miami-Dade	2015	RIDE	11
Miami-Dade	2015	RIDE	1
Miami-Dade	2015	RIDE	1
Miami-Dade	2015	RIDE	1
Miami-Dade	2015	RIDE	146
Miami-Dade	2015	RIDE	207
Miami-Dade	2015	RIDE	1
Miami-Dade	2015	RIDE	1
Miami-Dade	2015	RIDE	8
Miami-Dade	2015	RIDE	9
Miami-Dade	2015	RIDE	2
Miami-Dade	2015	RIDE	1
Miami-Dade	2015	RIDE	1
Miami-Dade	2015	RIDE	1
Miami-Dade	2015	RIDE	19

CNTYNM	YEAR	MODE	TACTCNT
Miami-Dade	2015	RIDE	264
Miami-Dade	2015	RIDE	257
Miami-Dade	2015	RIDE	4
Miami-Dade	2015	RIDE	4
Miami-Dade	2015	RIDE	4
Miami-Dade	2015	RIDE	4
Miami-Dade	2015	RIDE	201
Miami-Dade	2015	RIDE	197
Miami-Dade	2015	RIDE	12
Miami-Dade	2015	RIDE	89
Miami-Dade	2015	RIDE	1
Miami-Dade	2015	RIDE	91
Miami-Dade	2015	RIDE	5
Miami-Dade	2015	RIDE	2
Miami-Dade	2015	RIDE	1
Miami-Dade	2015	RIDE	161
Miami-Dade	2015	RIDE	55
Miami-Dade	2015	RIDE	338
Miami-Dade	2015	RIDE	289
Miami-Dade	2015	RIDE	173
Miami-Dade	2015	RIDE	244
Miami-Dade	2015	RIDE	12
Miami-Dade	2015	RIDE	1
Miami-Dade	2015	RIDE	4
Miami-Dade	2015	RIDE	3
Miami-Dade	2015	RIDE	12
Miami-Dade	2015	RIDE	12
Miami-Dade	2015	RIDE	125
Miami-Dade	2015	RIDE	196
Miami-Dade	2015	RIDE	163
Miami-Dade	2015	RIDE	1
Miami-Dade	2015	RIDE	520
Miami-Dade	2015	RIDE	479
Miami-Dade	2015	RIDE	199
Miami-Dade	2015	RIDE	235
Miami-Dade	2015	RIDE	2
Miami-Dade	2015	RIDE	2
Miami-Dade	2015	RIDE	2
Miami-Dade	2015	RIDE	2
Miami-Dade	2015	RIDE	1
Miami-Dade	2015	RIDE	205
Miami-Dade	2015	RIDE	1
Miami-Dade	2015	RIDE	2
Miami-Dade	2015	RIDE	140
Miami-Dade	2015	RIDE	214
Miami-Dade	2015	RIDE	293
Miami-Dade	2015	RIDE	1
Miami-Dade	2015	RIDE	11
Miami-Dade	2015	RIDE	13
Miami-Dade	2015	RIDE	3
Miami-Dade	2015	RIDE	7

CNTYNM	YEAR	MODE	TACTCNT
Miami-Dade	2015	RIDE	7
Miami-Dade	2015	RIDE	5
Miami-Dade	2015	RIDE	80
Miami-Dade	2015	RIDE	1
Miami-Dade	2015	RIDE	1
Miami-Dade	2015	RIDE	1
Miami-Dade	2015	RIDE	156
Miami-Dade	2015	RIDE	149
Miami-Dade	2016	RIDE	82
Miami-Dade	2016	RIDE	55
Miami-Dade	2016	RIDE	53
Miami-Dade	2016	RIDE	20
Miami-Dade	2016	RIDE	681
Miami-Dade	2016	RIDE	745
Miami-Dade	2016	RIDE	139
Miami-Dade	2016	RIDE	135
Miami-Dade	2016	RIDE	7
Miami-Dade	2016	RIDE	2
Miami-Dade	2016	RIDE	3
Miami-Dade	2016	RIDE	364
Miami-Dade	2016	RIDE	316
Miami-Dade	2016	RIDE	298
Miami-Dade	2016	RIDE	210
Miami-Dade	2016	RIDE	280
Miami-Dade	2016	RIDE	55
Miami-Dade	2016	RIDE	52
Miami-Dade	2016	RIDE	50
Miami-Dade	2016	RIDE	9
Miami-Dade	2016	RIDE	2
Miami-Dade	2016	RIDE	3
Miami-Dade	2016	RIDE	10
Miami-Dade	2016	RIDE	14
Miami-Dade	2016	RIDE	13
Miami-Dade	2016	RIDE	12
Miami-Dade	2016	RIDE	1
Miami-Dade	2016	RIDE	5
Miami-Dade	2016	RIDE	5
Miami-Dade	2016	RIDE	3
Miami-Dade	2016	RIDE	1
Miami-Dade	2016	RIDE	4
Miami-Dade	2016	RIDE	4
Miami-Dade	2016	RIDE	1
Miami-Dade	2016	RIDE	3
Miami-Dade	2016	RIDE	10
Miami-Dade	2016	RIDE	5
Miami-Dade	2016	RIDE	56
Miami-Dade	2016	RIDE	3
Miami-Dade	2016	RIDE	1
Miami-Dade	2016	RIDE	1
Miami-Dade	2016	RIDE	106
Miami-Dade	2016	RIDE	74

CNTYNM	YEAR	MODE	TACTCNT
Miami-Dade	2016	RIDE	110
Miami-Dade	2016	RIDE	121
Miami-Dade	2016	RIDE	113
Miami-Dade	2016	RIDE	129
Miami-Dade	2016	RIDE	130
Miami-Dade	2016	RIDE	4
Miami-Dade	2016	RIDE	140
Miami-Dade	2016	RIDE	119
Miami-Dade	2016	RIDE	65
Miami-Dade	2016	RIDE	4
Miami-Dade	2016	RIDE	78
Miami-Dade	2016	RIDE	81
Miami-Dade	2016	RIDE	39
Miami-Dade	2016	RIDE	42
Miami-Dade	2016	RIDE	9
Miami-Dade	2016	RIDE	20
Miami-Dade	2016	RIDE	2
Miami-Dade	2016	RIDE	9
Miami-Dade	2016	RIDE	6
Miami-Dade	2016	RIDE	1
Miami-Dade	2016	RIDE	24
Miami-Dade	2016	RIDE	6
Miami-Dade	2016	RIDE	2
Miami-Dade	2016	RIDE	3
Miami-Dade	2016	RIDE	7
Miami-Dade	2016	RIDE	2
Miami-Dade	2016	RIDE	1
Miami-Dade	2016	RIDE	6
Miami-Dade	2016	RIDE	16
Miami-Dade	2016	RIDE	2
Miami-Dade	2016	RIDE	2
Miami-Dade	2016	RIDE	9
Miami-Dade	2016	RIDE	2
Miami-Dade	2016	RIDE	1
Miami-Dade	2016	RIDE	2
Miami-Dade	2016	RIDE	12
Miami-Dade	2016	RIDE	2
Miami-Dade	2016	RIDE	9
Miami-Dade	2016	RIDE	3
Miami-Dade	2016	RIDE	16
Miami-Dade	2016	RIDE	3
Miami-Dade	2016	RIDE	9
Miami-Dade	2016	RIDE	3
Miami-Dade	2016	RIDE	14
Miami-Dade	2016	RIDE	15
Miami-Dade	2016	RIDE	20
Miami-Dade	2016	RIDE	19
Miami-Dade	2016	RIDE	1
Miami-Dade	2016	RIDE	17
Miami-Dade	2016	RIDE	1
Miami-Dade	2016	RIDE	17

CNTYNM	YEAR	MODE	TACTCNT
Miami-Dade	2016	RIDE	48
Miami-Dade	2016	RIDE	17
Miami-Dade	2016	RIDE	1
Miami-Dade	2016	RIDE	18
Miami-Dade	2016	RIDE	9
Miami-Dade	2016	RIDE	20
Miami-Dade	2016	RIDE	3
Miami-Dade	2016	RIDE	32
Miami-Dade	2016	RIDE	32
Miami-Dade	2016	RIDE	31
Miami-Dade	2016	RIDE	39
Miami-Dade	2016	RIDE	16
Miami-Dade	2016	RIDE	24
Miami-Dade	2016	RIDE	22
Miami-Dade	2016	RIDE	4
Miami-Dade	2016	RIDE	4
Miami-Dade	2016	RIDE	2
Miami-Dade	2016	RIDE	2
Miami-Dade	2016	RIDE	3
Miami-Dade	2016	RIDE	2
Miami-Dade	2016	RIDE	3
Miami-Dade	2016	RIDE	46
Miami-Dade	2016	RIDE	12
Miami-Dade	2016	RIDE	14
Miami-Dade	2016	RIDE	3
Miami-Dade	2016	RIDE	46
Miami-Dade	2016	RIDE	1
Miami-Dade	2016	RIDE	12
Miami-Dade	2016	RIDE	2
Miami-Dade	2016	RIDE	14
Miami-Dade	2016	RIDE	13
Miami-Dade	2016	RIDE	13
Miami-Dade	2016	RIDE	2
Miami-Dade	2016	RIDE	7
Miami-Dade	2016	RIDE	1
Miami-Dade	2016	RIDE	6
Miami-Dade	2016	RIDE	47
Miami-Dade	2016	RIDE	11
Miami-Dade	2016	RIDE	15
Miami-Dade	2016	RIDE	1
Miami-Dade	2016	RIDE	1
Miami-Dade	2016	RIDE	44
Miami-Dade	2016	RIDE	12
Miami-Dade	2016	RIDE	1
Miami-Dade	2016	RIDE	12
Miami-Dade	2016	RIDE	3
Miami-Dade	2016	RIDE	5
Miami-Dade	2016	RIDE	1
Miami-Dade	2016	RIDE	2
Miami-Dade	2016	RIDE	1
Miami-Dade	2016	RIDE	43

CNTYNM	YEAR	MODE	TACTCNT
Miami-Dade	2016	RIDE	1
Miami-Dade	2016	RIDE	12
Miami-Dade	2016	RIDE	1
Miami-Dade	2016	RIDE	11
Miami-Dade	2016	RIDE	85
Miami-Dade	2016	RIDE	1
Miami-Dade	2016	RIDE	86
Miami-Dade	2016	RIDE	1
Miami-Dade	2016	RIDE	80
Miami-Dade	2016	RIDE	11
Miami-Dade	2016	RIDE	60
Miami-Dade	2016	RIDE	8
Miami-Dade	2016	RIDE	49
Miami-Dade	2016	RIDE	60
Miami-Dade	2016	RIDE	61
Miami-Dade	2016	RIDE	63
Miami-Dade	2016	RIDE	53
Miami-Dade	2016	RIDE	49
Miami-Dade	2016	RIDE	48
Miami-Dade	2016	RIDE	50
Miami-Dade	2016	RIDE	2
Miami-Dade	2016	RIDE	49
Miami-Dade	2016	RIDE	51
Miami-Dade	2016	RIDE	48
Miami-Dade	2016	RIDE	4
Miami-Dade	2016	RIDE	49
Miami-Dade	2016	RIDE	1
Miami-Dade	2016	RIDE	2
Miami-Dade	2016	RIDE	1
Miami-Dade	2016	RIDE	4
Miami-Dade	2016	RIDE	8
Miami-Dade	2016	RIDE	1
Miami-Dade	2016	RIDE	1
Miami-Dade	2016	RIDE	1
Miami-Dade	2016	RIDE	12
Miami-Dade	2016	RIDE	1
Miami-Dade	2016	RIDE	11
Miami-Dade	2016	RIDE	4
Miami-Dade	2016	RIDE	1
Miami-Dade	2016	RIDE	4
Miami-Dade	2016	RIDE	2
Miami-Dade	2016	RIDE	16
Miami-Dade	2016	RIDE	2
Miami-Dade	2016	RIDE	2
Miami-Dade	2016	RIDE	9
Miami-Dade	2016	RIDE	2
Miami-Dade	2016	RIDE	2
Miami-Dade	2016	RIDE	1
Miami-Dade	2016	RIDE	15
Miami-Dade	2016	RIDE	15
Miami-Dade	2016	RIDE	6

CNTYNM	YEAR	MODE	TACTCNT
Miami-Dade	2016	RIDE	5
Miami-Dade	2016	RIDE	5
Miami-Dade	2016	RIDE	47
Miami-Dade	2016	RIDE	7
Miami-Dade	2016	RIDE	3
Miami-Dade	2016	RIDE	5
Miami-Dade	2016	RIDE	7
Miami-Dade	2016	RIDE	3
Miami-Dade	2016	RIDE	3
Miami-Dade	2016	RIDE	21
Miami-Dade	2016	RIDE	5
Miami-Dade	2016	RIDE	2
Miami-Dade	2016	RIDE	4
Miami-Dade	2016	RIDE	4
Miami-Dade	2016	RIDE	3
Miami-Dade	2016	RIDE	1
Miami-Dade	2016	RIDE	1
Miami-Dade	2016	RIDE	2
Miami-Dade	2016	RIDE	1
Miami-Dade	2016	RIDE	1
Miami-Dade	2016	RIDE	1
Miami-Dade	2016	RIDE	2
Miami-Dade	2016	RIDE	4
Miami-Dade	2016	RIDE	2
Miami-Dade	2016	RIDE	17
Miami-Dade	2016	RIDE	34
Miami-Dade	2016	RIDE	1
Miami-Dade	2016	RIDE	52
Miami-Dade	2016	RIDE	7
Miami-Dade	2016	RIDE	11
Miami-Dade	2016	RIDE	2
Miami-Dade	2016	RIDE	17
Miami-Dade	2016	RIDE	2
Miami-Dade	2016	RIDE	34
Miami-Dade	2016	RIDE	1
Miami-Dade	2016	RIDE	52
Miami-Dade	2016	RIDE	15
Miami-Dade	2016	RIDE	2
Miami-Dade	2016	RIDE	7
Miami-Dade	2016	RIDE	11
Miami-Dade	2016	RIDE	1
Miami-Dade	2016	RIDE	8
Miami-Dade	2016	RIDE	1
Miami-Dade	2016	RIDE	2
Miami-Dade	2016	RIDE	34
Miami-Dade	2016	RIDE	33
Miami-Dade	2016	RIDE	54
Miami-Dade	2016	RIDE	1
Miami-Dade	2016	RIDE	9
Miami-Dade	2016	RIDE	4
Miami-Dade	2016	RIDE	12

CNTYNM	YEAR	MODE	TACTCNT
Miami-Dade	2016	RIDE	1
Miami-Dade	2016	RIDE	2
Miami-Dade	2016	RIDE	19
Miami-Dade	2016	RIDE	1
Miami-Dade	2016	RIDE	34
Miami-Dade	2016	RIDE	32
Miami-Dade	2016	RIDE	2
Miami-Dade	2016	RIDE	53
Miami-Dade	2016	RIDE	3
Miami-Dade	2016	RIDE	8
Miami-Dade	2016	RIDE	12
Miami-Dade	2016	RIDE	1
Miami-Dade	2016	RIDE	4
Miami-Dade	2016	RIDE	32
Miami-Dade	2016	RIDE	15
Miami-Dade	2016	RIDE	51
Miami-Dade	2016	RIDE	52
Miami-Dade	2016	RIDE	1
Miami-Dade	2016	RIDE	54
Miami-Dade	2016	RIDE	30
Miami-Dade	2016	RIDE	40
Miami-Dade	2016	RIDE	50
Miami-Dade	2016	RIDE	17
Miami-Dade	2016	RIDE	6
Miami-Dade	2016	RIDE	30
Miami-Dade	2016	RIDE	31
Miami-Dade	2016	RIDE	11
Miami-Dade	2016	RIDE	14
Miami-Dade	2016	RIDE	14
Miami-Dade	2016	RIDE	16
Miami-Dade	2016	RIDE	12
Miami-Dade	2016	RIDE	10
Miami-Dade	2016	RIDE	8
Miami-Dade	2016	RIDE	1
Miami-Dade	2016	RIDE	9
Miami-Dade	2016	RIDE	10
Miami-Dade	2016	RIDE	13
Miami-Dade	2016	RIDE	4
Miami-Dade	2016	RIDE	13
Miami-Dade	2016	RIDE	3
Miami-Dade	2016	RIDE	3
Miami-Dade	2016	RIDE	17
Miami-Dade	2016	RIDE	6
Miami-Dade	2016	RIDE	1
Miami-Dade	2016	RIDE	42
Miami-Dade	2016	RIDE	28
Miami-Dade	2016	RIDE	1
Miami-Dade	2016	RIDE	1
Miami-Dade	2016	RIDE	2
Miami-Dade	2016	RIDE	5
Miami-Dade	2016	RIDE	6

CNTYNM	YEAR	MODE	TACTCNT
Miami-Dade	2016	RIDE	5
Miami-Dade	2016	RIDE	17
Miami-Dade	2016	RIDE	1
Miami-Dade	2016	RIDE	9
Miami-Dade	2016	RIDE	6
Miami-Dade	2016	RIDE	4
Miami-Dade	2016	RIDE	6
Miami-Dade	2016	RIDE	1
Miami-Dade	2016	RIDE	44
Miami-Dade	2016	RIDE	6
Miami-Dade	2016	RIDE	1
Miami-Dade	2016	RIDE	1
Miami-Dade	2016	RIDE	2
Miami-Dade	2016	RIDE	2
Miami-Dade	2016	RIDE	2
Miami-Dade	2016	RIDE	5
Miami-Dade	2016	RIDE	3
Miami-Dade	2016	RIDE	1
Miami-Dade	2016	RIDE	25
Miami-Dade	2016	RIDE	44
Miami-Dade	2016	RIDE	38
Miami-Dade	2016	RIDE	36
Miami-Dade	2016	RIDE	35
Miami-Dade	2016	RIDE	2
Miami-Dade	2016	RIDE	1
Miami-Dade	2016	RIDE	2
Miami-Dade	2016	RIDE	1
Miami-Dade	2016	RIDE	1
Miami-Dade	2016	RIDE	4
Miami-Dade	2016	RIDE	48
Miami-Dade	2016	RIDE	17
Miami-Dade	2016	RIDE	35
Miami-Dade	2016	RIDE	1
Miami-Dade	2016	RIDE	36
Miami-Dade	2016	RIDE	3
Miami-Dade	2016	RIDE	2
Miami-Dade	2016	RIDE	1
Miami-Dade	2016	RIDE	34
Miami-Dade	2016	RIDE	1
Miami-Dade	2016	RIDE	34
Miami-Dade	2016	RIDE	79
Miami-Dade	2016	RIDE	1
Miami-Dade	2016	RIDE	3
Miami-Dade	2016	RIDE	58
Miami-Dade	2016	RIDE	2
Miami-Dade	2016	RIDE	32
Miami-Dade	2016	RIDE	46
Miami-Dade	2016	RIDE	19
Miami-Dade	2016	RIDE	47
Miami-Dade	2016	RIDE	30
Miami-Dade	2016	RIDE	31

CNTYNM	YEAR	MODE	TACTCNT
Miami-Dade	2016	RIDE	4
Miami-Dade	2016	RIDE	2
Miami-Dade	2016	RIDE	2
Miami-Dade	2016	RIDE	1
Miami-Dade	2016	RIDE	52
Miami-Dade	2016	RIDE	8
Miami-Dade	2016	RIDE	3
Miami-Dade	2016	RIDE	41
Miami-Dade	2016	RIDE	43
Miami-Dade	2016	RIDE	2
Miami-Dade	2016	RIDE	5
Miami-Dade	2016	RIDE	1
Miami-Dade	2016	RIDE	6
Miami-Dade	2016	RIDE	2
Miami-Dade	2016	RIDE	1
Miami-Dade	2016	RIDE	6
Miami-Dade	2016	RIDE	2
Miami-Dade	2016	RIDE	2
Miami-Dade	2016	RIDE	6
Miami-Dade	2016	RIDE	6
Miami-Dade	2016	RIDE	5
Miami-Dade	2016	RIDE	5
Miami-Dade	2016	RIDE	5
Miami-Dade	2016	RIDE	6
Miami-Dade	2016	RIDE	6
Miami-Dade	2016	RIDE	5
Miami-Dade	2016	RIDE	35
Miami-Dade	2016	RIDE	10
Miami-Dade	2016	RIDE	18
Miami-Dade	2016	RIDE	1
Miami-Dade	2016	RIDE	13
Miami-Dade	2016	RIDE	65
Miami-Dade	2016	RIDE	2
Miami-Dade	2016	RIDE	19
Miami-Dade	2016	RIDE	42
Miami-Dade	2016	RIDE	17
Miami-Dade	2016	RIDE	15
Miami-Dade	2016	RIDE	43
Miami-Dade	2016	RIDE	13
Miami-Dade	2016	RIDE	2
Miami-Dade	2016	RIDE	1
Miami-Dade	2016	RIDE	148
Miami-Dade	2016	RIDE	143
Miami-Dade	2016	RIDE	32
Miami-Dade	2016	RIDE	29
Miami-Dade	2016	RIDE	19
Miami-Dade	2016	RIDE	149
Miami-Dade	2016	RIDE	2
Miami-Dade	2016	RIDE	130
Miami-Dade	2016	RIDE	137
Miami-Dade	2016	RIDE	2

CNTYNM	YEAR	MODE	TACTCNT
Miami-Dade	2016	RIDE	7
Miami-Dade	2016	RIDE	8
Miami-Dade	2016	RIDE	8
Miami-Dade	2016	RIDE	8
Miami-Dade	2016	RIDE	28
Miami-Dade	2016	RIDE	10
Miami-Dade	2016	RIDE	7
Miami-Dade	2016	RIDE	2
Miami-Dade	2016	RIDE	4
Miami-Dade	2016	RIDE	1
Miami-Dade	2016	RIDE	13
Miami-Dade	2016	RIDE	9
Miami-Dade	2016	RIDE	9
Miami-Dade	2016	RIDE	22
Miami-Dade	2016	RIDE	22
Miami-Dade	2016	RIDE	5
Miami-Dade	2016	RIDE	15
Miami-Dade	2016	RIDE	72
Miami-Dade	2016	RIDE	61
Miami-Dade	2016	RIDE	1
Miami-Dade	2016	RIDE	2
Miami-Dade	2016	RIDE	11
Miami-Dade	2016	RIDE	6
Miami-Dade	2016	RIDE	10
Miami-Dade	2016	RIDE	8
Miami-Dade	2016	RIDE	61
Miami-Dade	2016	RIDE	5
Miami-Dade	2016	RIDE	1
Miami-Dade	2016	RIDE	5
Miami-Dade	2016	RIDE	12
Miami-Dade	2016	RIDE	11
Miami-Dade	2016	RIDE	59
Miami-Dade	2016	RIDE	6
Miami-Dade	2016	RIDE	12
Miami-Dade	2016	RIDE	6
Miami-Dade	2016	RIDE	1
Miami-Dade	2016	RIDE	6
Miami-Dade	2016	RIDE	7
Miami-Dade	2016	RIDE	9
Miami-Dade	2016	RIDE	8
Miami-Dade	2016	RIDE	8
Miami-Dade	2016	RIDE	51
Miami-Dade	2016	RIDE	58
Miami-Dade	2016	RIDE	9
Miami-Dade	2016	RIDE	5
Miami-Dade	2016	RIDE	10
Miami-Dade	2016	RIDE	6
Miami-Dade	2016	RIDE	8
Miami-Dade	2016	RIDE	3
Miami-Dade	2016	RIDE	8
Miami-Dade	2016	RIDE	59

CNTYNM	YEAR	MODE	TACTCNT
Miami-Dade	2016	RIDE	48
Miami-Dade	2016	RIDE	14
Miami-Dade	2016	RIDE	7
Miami-Dade	2016	RIDE	14
Miami-Dade	2016	RIDE	5
Miami-Dade	2016	RIDE	9
Miami-Dade	2016	RIDE	10
Miami-Dade	2016	RIDE	8
Miami-Dade	2016	RIDE	9
Miami-Dade	2016	RIDE	9
Miami-Dade	2016	RIDE	61
Miami-Dade	2016	RIDE	9
Miami-Dade	2016	RIDE	16
Miami-Dade	2016	RIDE	13
Miami-Dade	2016	RIDE	14
Miami-Dade	2016	RIDE	15
Miami-Dade	2016	RIDE	11
Miami-Dade	2016	RIDE	112
Miami-Dade	2016	RIDE	96
Miami-Dade	2016	RIDE	9
Miami-Dade	2016	RIDE	59
Miami-Dade	2016	RIDE	39
Miami-Dade	2016	RIDE	95
Miami-Dade	2016	RIDE	2
Miami-Dade	2016	RIDE	14
Miami-Dade	2016	RIDE	5
Miami-Dade	2016	RIDE	12
Miami-Dade	2016	RIDE	1
Miami-Dade	2016	RIDE	25
Miami-Dade	2016	RIDE	8
Miami-Dade	2016	RIDE	1
Miami-Dade	2016	RIDE	52
Miami-Dade	2016	RIDE	85
Miami-Dade	2016	RIDE	4
Miami-Dade	2016	RIDE	1
Miami-Dade	2016	RIDE	2
Miami-Dade	2016	RIDE	2
Miami-Dade	2016	RIDE	58
Miami-Dade	2016	RIDE	19
Miami-Dade	2016	RIDE	92
Miami-Dade	2016	RIDE	12
Miami-Dade	2016	RIDE	8
Miami-Dade	2016	RIDE	12
Miami-Dade	2016	RIDE	8
Miami-Dade	2016	RIDE	25
Miami-Dade	2016	RIDE	2
Miami-Dade	2016	RIDE	7
Miami-Dade	2016	RIDE	2
Miami-Dade	2016	RIDE	57
Miami-Dade	2016	RIDE	24
Miami-Dade	2016	RIDE	4

CNTYNM	YEAR	MODE	TACTCNT
Miami-Dade	2016	RIDE	57
Miami-Dade	2016	RIDE	6
Miami-Dade	2016	RIDE	6
Miami-Dade	2016	RIDE	8
Miami-Dade	2016	RIDE	6
Miami-Dade	2016	RIDE	9
Miami-Dade	2016	RIDE	60
Miami-Dade	2016	RIDE	9
Miami-Dade	2016	RIDE	8
Miami-Dade	2016	RIDE	34
Miami-Dade	2016	RIDE	8
Miami-Dade	2016	RIDE	63
Miami-Dade	2016	RIDE	6
Miami-Dade	2016	RIDE	3
Miami-Dade	2016	RIDE	4
Miami-Dade	2016	RIDE	1
Miami-Dade	2016	RIDE	53
Miami-Dade	2016	RIDE	1
Miami-Dade	2016	RIDE	6
Miami-Dade	2016	RIDE	53
Miami-Dade	2016	RIDE	3
Miami-Dade	2016	RIDE	6
Miami-Dade	2016	RIDE	35
Miami-Dade	2016	RIDE	65
Miami-Dade	2016	RIDE	5
Miami-Dade	2016	RIDE	9
Miami-Dade	2016	RIDE	6
Miami-Dade	2016	RIDE	36
Miami-Dade	2016	RIDE	68
Miami-Dade	2016	RIDE	17
Miami-Dade	2016	RIDE	53
Miami-Dade	2016	RIDE	2
Miami-Dade	2016	RIDE	8
Miami-Dade	2016	RIDE	2
Miami-Dade	2016	RIDE	80
Miami-Dade	2016	RIDE	7
Miami-Dade	2016	RIDE	6
Miami-Dade	2016	RIDE	34
Miami-Dade	2016	RIDE	2
Miami-Dade	2016	RIDE	2
Miami-Dade	2016	RIDE	46
Miami-Dade	2016	RIDE	89
Miami-Dade	2016	RIDE	39
Miami-Dade	2016	RIDE	11
Miami-Dade	2016	RIDE	4
Miami-Dade	2016	RIDE	64
Miami-Dade	2016	RIDE	6
Miami-Dade	2016	RIDE	42
Miami-Dade	2016	RIDE	4
Miami-Dade	2016	RIDE	83
Miami-Dade	2016	RIDE	62

CNTYNM	YEAR	MODE	TACTCNT
Miami-Dade	2016	RIDE	81
Miami-Dade	2016	RIDE	5
Miami-Dade	2016	RIDE	4
Miami-Dade	2016	RIDE	1
Miami-Dade	2016	RIDE	3
Miami-Dade	2016	RIDE	2
Miami-Dade	2016	RIDE	81
Miami-Dade	2016	RIDE	84
Miami-Dade	2016	RIDE	103
Miami-Dade	2016	RIDE	4
Miami-Dade	2016	RIDE	46
Miami-Dade	2016	RIDE	5
Miami-Dade	2016	RIDE	5
Miami-Dade	2016	RIDE	91
Miami-Dade	2016	RIDE	1
Miami-Dade	2016	RIDE	2
Miami-Dade	2016	RIDE	1
Miami-Dade	2016	RIDE	5
Miami-Dade	2016	RIDE	2
Miami-Dade	2016	RIDE	3
Miami-Dade	2016	RIDE	78
Miami-Dade	2016	RIDE	52
Miami-Dade	2016	RIDE	5
Miami-Dade	2016	RIDE	3
Miami-Dade	2016	RIDE	91
Miami-Dade	2016	RIDE	1
Miami-Dade	2016	RIDE	6
Miami-Dade	2016	RIDE	5
Miami-Dade	2016	RIDE	2
Miami-Dade	2016	RIDE	1
Miami-Dade	2016	RIDE	82
Miami-Dade	2016	RIDE	54
Miami-Dade	2016	RIDE	5
Miami-Dade	2016	RIDE	4
Miami-Dade	2016	RIDE	53
Miami-Dade	2016	RIDE	63
Miami-Dade	2016	RIDE	58
Miami-Dade	2016	RIDE	12
Miami-Dade	2016	RIDE	1
Miami-Dade	2016	RIDE	10
Miami-Dade	2016	RIDE	85
Miami-Dade	2016	RIDE	2
Miami-Dade	2016	RIDE	5
Miami-Dade	2016	RIDE	3
Miami-Dade	2016	RIDE	2
Miami-Dade	2016	RIDE	1
Miami-Dade	2016	RIDE	5
Miami-Dade	2016	RIDE	9
Miami-Dade	2016	RIDE	2
Miami-Dade	2016	RIDE	1
Miami-Dade	2016	RIDE	2

CNTYNM	YEAR	MODE	TACTCNT
Miami-Dade	2016	RIDE	48
Miami-Dade	2016	RIDE	50
Miami-Dade	2016	RIDE	6
Miami-Dade	2016	RIDE	12
Miami-Dade	2016	RIDE	1
Miami-Dade	2016	RIDE	61
Miami-Dade	2016	RIDE	9
Miami-Dade	2016	RIDE	65
Miami-Dade	2016	RIDE	70
Miami-Dade	2016	RIDE	69
Miami-Dade	2016	RIDE	82
Miami-Dade	2016	RIDE	72
Miami-Dade	2016	RIDE	65
Miami-Dade	2016	RIDE	1
Miami-Dade	2016	RIDE	67
Miami-Dade	2016	RIDE	64
Miami-Dade	2016	RIDE	4
Miami-Dade	2016	RIDE	3
Miami-Dade	2016	RIDE	7
Miami-Dade	2016	RIDE	9
Miami-Dade	2016	RIDE	4
Miami-Dade	2016	RIDE	3
Miami-Dade	2016	RIDE	60
Miami-Dade	2016	RIDE	40
Miami-Dade	2016	RIDE	9
Miami-Dade	2016	RIDE	3
Miami-Dade	2016	RIDE	31
Miami-Dade	2016	RIDE	2
Miami-Dade	2016	RIDE	2
Miami-Dade	2016	RIDE	11
Miami-Dade	2016	RIDE	1
Miami-Dade	2016	RIDE	1
Miami-Dade	2016	RIDE	13
Miami-Dade	2016	RIDE	7
Miami-Dade	2016	RIDE	5
Miami-Dade	2016	RIDE	5
Miami-Dade	2016	RIDE	3
Miami-Dade	2016	RIDE	55
Miami-Dade	2016	RIDE	3
Miami-Dade	2016	RIDE	3
Miami-Dade	2016	RIDE	2
Miami-Dade	2016	RIDE	12
Miami-Dade	2016	RIDE	8
Miami-Dade	2016	RIDE	1
Miami-Dade	2016	RIDE	106
Miami-Dade	2016	RIDE	1
Miami-Dade	2016	RIDE	14
Miami-Dade	2016	RIDE	1
Miami-Dade	2016	RIDE	1
Miami-Dade	2016	RIDE	1
Miami-Dade	2016	RIDE	7

CNTYNM	YEAR	MODE	TACTCNT
Miami-Dade	2016	RIDE	1
Miami-Dade	2016	RIDE	106
Miami-Dade	2016	RIDE	10
Miami-Dade	2016	RIDE	10
Miami-Dade	2016	RIDE	10
Miami-Dade	2016	RIDE	64
Miami-Dade	2016	RIDE	7
Miami-Dade	2016	RIDE	5
Miami-Dade	2016	RIDE	7
Miami-Dade	2016	RIDE	3
Miami-Dade	2016	RIDE	1
Miami-Dade	2016	RIDE	2
Miami-Dade	2016	RIDE	106
Miami-Dade	2016	RIDE	8
Miami-Dade	2016	RIDE	67
Miami-Dade	2016	RIDE	11
Miami-Dade	2016	RIDE	2
Miami-Dade	2016	RIDE	1
Miami-Dade	2016	RIDE	2
Miami-Dade	2016	RIDE	4
Miami-Dade	2016	RIDE	1
Miami-Dade	2016	RIDE	3
Miami-Dade	2016	RIDE	31
Miami-Dade	2016	RIDE	7
Miami-Dade	2016	RIDE	3
Miami-Dade	2016	RIDE	64
Miami-Dade	2016	RIDE	31
Miami-Dade	2016	RIDE	26
Miami-Dade	2016	RIDE	9
Miami-Dade	2016	RIDE	2
Miami-Dade	2016	RIDE	88
Miami-Dade	2016	RIDE	2
Miami-Dade	2016	RIDE	5
Miami-Dade	2016	RIDE	4
Miami-Dade	2016	RIDE	101
Miami-Dade	2016	RIDE	207
Miami-Dade	2016	RIDE	247
Miami-Dade	2016	RIDE	250
Miami-Dade	2016	RIDE	28
Miami-Dade	2016	RIDE	278
Miami-Dade	2016	RIDE	263
Miami-Dade	2016	RIDE	12
Miami-Dade	2016	RIDE	106
Miami-Dade	2016	RIDE	147
Miami-Dade	2016	RIDE	16
Miami-Dade	2016	RIDE	4
Miami-Dade	2016	RIDE	3
Miami-Dade	2016	RIDE	3
Miami-Dade	2016	RIDE	8
Miami-Dade	2016	RIDE	78
Miami-Dade	2016	RIDE	14

CNTYNM	YEAR	MODE	TACTCNT
Miami-Dade	2016	RIDE	1
Miami-Dade	2016	RIDE	74
Miami-Dade	2016	RIDE	100
Miami-Dade	2016	RIDE	72
Miami-Dade	2016	RIDE	1
Miami-Dade	2016	RIDE	15
Miami-Dade	2016	RIDE	29
Miami-Dade	2016	RIDE	5
Miami-Dade	2016	RIDE	19
Miami-Dade	2016	RIDE	51
Miami-Dade	2016	RIDE	16
Miami-Dade	2016	RIDE	76
Miami-Dade	2016	RIDE	84
Miami-Dade	2016	RIDE	2
Miami-Dade	2016	RIDE	18
Miami-Dade	2016	RIDE	8
Miami-Dade	2016	RIDE	4
Miami-Dade	2016	RIDE	70
Miami-Dade	2016	RIDE	1
Miami-Dade	2016	RIDE	81
Miami-Dade	2016	RIDE	1
Miami-Dade	2016	RIDE	14
Miami-Dade	2016	RIDE	46
Miami-Dade	2016	RIDE	68
Miami-Dade	2016	RIDE	10
Miami-Dade	2016	RIDE	8
Miami-Dade	2016	RIDE	34
Miami-Dade	2016	RIDE	77
Miami-Dade	2016	RIDE	83
Miami-Dade	2016	RIDE	1
Miami-Dade	2016	RIDE	16
Miami-Dade	2016	RIDE	21
Miami-Dade	2016	RIDE	4
Miami-Dade	2016	RIDE	77
Miami-Dade	2016	RIDE	82
Miami-Dade	2016	RIDE	7
Miami-Dade	2016	RIDE	100
Miami-Dade	2016	RIDE	46
Miami-Dade	2016	RIDE	18
Miami-Dade	2016	RIDE	38
Miami-Dade	2016	RIDE	80
Miami-Dade	2016	RIDE	2
Miami-Dade	2016	RIDE	1
Miami-Dade	2016	RIDE	2
Miami-Dade	2016	RIDE	3
Miami-Dade	2016	RIDE	99
Miami-Dade	2016	RIDE	4
Miami-Dade	2016	RIDE	103
Miami-Dade	2016	RIDE	95
Miami-Dade	2016	RIDE	104
Miami-Dade	2016	RIDE	220

CNTYNM	YEAR	MODE	TACTCNT
Miami-Dade	2016	RIDE	1
Miami-Dade	2016	RIDE	222
Miami-Dade	2016	RIDE	89
Miami-Dade	2016	RIDE	53
Miami-Dade	2016	RIDE	278
Miami-Dade	2016	RIDE	247
Miami-Dade	2016	RIDE	248
Miami-Dade	2016	RIDE	3
Miami-Dade	2016	RIDE	302
Miami-Dade	2016	RIDE	436
Miami-Dade	2016	RIDE	87
Miami-Dade	2016	RIDE	118
Miami-Dade	2016	RIDE	1
Miami-Dade	2016	RIDE	1
Miami-Dade	2016	RIDE	5
Miami-Dade	2016	RIDE	9
Miami-Dade	2016	RIDE	1
Miami-Dade	2016	RIDE	144
Miami-Dade	2016	RIDE	11
Miami-Dade	2016	RIDE	210
Miami-Dade	2016	RIDE	1
Miami-Dade	2016	RIDE	3
Miami-Dade	2016	RIDE	11
Miami-Dade	2016	RIDE	1
Miami-Dade	2016	RIDE	209
Miami-Dade	2016	RIDE	120
Miami-Dade	2016	RIDE	2
Miami-Dade	2016	RIDE	52
Miami-Dade	2016	RIDE	105
Miami-Dade	2016	RIDE	102
Miami-Dade	2016	RIDE	1
Miami-Dade	2016	RIDE	91
Miami-Dade	2016	RIDE	97
Miami-Dade	2016	RIDE	93
Miami-Dade	2016	RIDE	112
Miami-Dade	2016	RIDE	208
Miami-Dade	2016	RIDE	123
Miami-Dade	2016	RIDE	1
Miami-Dade	2016	RIDE	119
Miami-Dade	2016	RIDE	142
Miami-Dade	2016	RIDE	12
Miami-Dade	2016	RIDE	71
Miami-Dade	2016	RIDE	226
Miami-Dade	2016	RIDE	119
Miami-Dade	2016	RIDE	1
Miami-Dade	2016	RIDE	1
Miami-Dade	2016	RIDE	2
Miami-Dade	2016	RIDE	7
Miami-Dade	2016	RIDE	214
Miami-Dade	2016	RIDE	6
Miami-Dade	2016	RIDE	4

CNTYNM	YEAR	MODE	TACTCNT
Miami-Dade	2016	RIDE	1
Miami-Dade	2016	RIDE	259
Miami-Dade	2016	RIDE	116
Miami-Dade	2016	RIDE	158
Miami-Dade	2016	RIDE	155
Miami-Dade	2016	RIDE	136
Miami-Dade	2016	RIDE	6
Miami-Dade	2016	RIDE	112
Miami-Dade	2016	RIDE	1
Miami-Dade	2016	RIDE	112
Miami-Dade	2016	RIDE	102
Miami-Dade	2016	RIDE	5
Miami-Dade	2016	RIDE	111
Miami-Dade	2016	RIDE	118
Miami-Dade	2016	RIDE	209
Miami-Dade	2016	RIDE	39
Miami-Dade	2016	RIDE	45
Miami-Dade	2016	RIDE	28
Miami-Dade	2016	RIDE	161
Miami-Dade	2016	RIDE	104
Miami-Dade	2016	RIDE	147
Miami-Dade	2016	RIDE	3
Miami-Dade	2016	RIDE	5
Miami-Dade	2016	RIDE	6
Miami-Dade	2016	RIDE	120
Miami-Dade	2016	RIDE	145
Miami-Dade	2016	RIDE	1
Miami-Dade	2016	RIDE	1
Miami-Dade	2016	RIDE	4
Miami-Dade	2016	RIDE	1
Miami-Dade	2016	RIDE	3
Miami-Dade	2016	RIDE	1
Miami-Dade	2016	RIDE	1
Miami-Dade	2016	RIDE	1
Miami-Dade	2016	RIDE	112
Miami-Dade	2016	RIDE	31
Miami-Dade	2016	RIDE	1
Miami-Dade	2016	RIDE	19
Miami-Dade	2016	RIDE	9
Miami-Dade	2016	RIDE	156
Miami-Dade	2016	RIDE	1
Miami-Dade	2016	RIDE	2
Miami-Dade	2016	RIDE	152
Miami-Dade	2016	RIDE	2
Miami-Dade	2016	RIDE	3
Miami-Dade	2016	RIDE	3
Miami-Dade	2016	RIDE	1
Miami-Dade	2016	RIDE	154
Miami-Dade	2016	RIDE	12
Miami-Dade	2016	RIDE	2
Miami-Dade	2016	RIDE	1

CNTYNM	YEAR	MODE	TACTCNT
Miami-Dade	2016	RIDE	3
Miami-Dade	2016	RIDE	3
Miami-Dade	2016	RIDE	11
Miami-Dade	2016	RIDE	10
Miami-Dade	2016	RIDE	1
Miami-Dade	2016	RIDE	1
Miami-Dade	2016	RIDE	788
Miami-Dade	2016	RIDE	8
Miami-Dade	2016	RIDE	2
Miami-Dade	2016	RIDE	710
Miami-Dade	2016	RIDE	719
Miami-Dade	2016	RIDE	11
Miami-Dade	2016	RIDE	43
Miami-Dade	2016	RIDE	766
Miami-Dade	2016	RIDE	3
Miami-Dade	2016	RIDE	677
Miami-Dade	2016	RIDE	11
Miami-Dade	2016	RIDE	8
Miami-Dade	2016	RIDE	35
Miami-Dade	2016	RIDE	678
Miami-Dade	2016	RIDE	687
Miami-Dade	2016	RIDE	5
Miami-Dade	2016	RIDE	714
Miami-Dade	2016	RIDE	2
Miami-Dade	2016	RIDE	734
Miami-Dade	2016	RIDE	777
Miami-Dade	2016	RIDE	814
Miami-Dade	2016	RIDE	5
Miami-Dade	2016	RIDE	738
Miami-Dade	2016	RIDE	3
Miami-Dade	2016	RIDE	906
Miami-Dade	2016	RIDE	1
Miami-Dade	2016	RIDE	829
Miami-Dade	2016	RIDE	14
Miami-Dade	2016	RIDE	861
Miami-Dade	2016	RIDE	1
Miami-Dade	2016	RIDE	1
Miami-Dade	2016	RIDE	4
Miami-Dade	2016	RIDE	9
Miami-Dade	2016	RIDE	2
Miami-Dade	2016	RIDE	188
Miami-Dade	2016	RIDE	1
Miami-Dade	2016	RIDE	1
Miami-Dade	2016	RIDE	1
Miami-Dade	2016	RIDE	7
Miami-Dade	2016	RIDE	1
Miami-Dade	2016	RIDE	1
Miami-Dade	2016	RIDE	2
Miami-Dade	2016	RIDE	8
Miami-Dade	2016	RIDE	2
Miami-Dade	2016	RIDE	127

CNTYNM	YEAR	MODE	TACTCNT
Miami-Dade	2016	RIDE	5
Miami-Dade	2016	RIDE	6
Miami-Dade	2016	RIDE	3
Miami-Dade	2016	RIDE	8
Miami-Dade	2016	RIDE	4
Miami-Dade	2016	RIDE	2
Miami-Dade	2016	RIDE	7
Miami-Dade	2016	RIDE	1
Miami-Dade	2016	RIDE	8
Miami-Dade	2016	RIDE	1
Miami-Dade	2016	RIDE	79
Miami-Dade	2016	RIDE	3
Miami-Dade	2016	RIDE	2
Miami-Dade	2016	RIDE	2
Miami-Dade	2016	RIDE	203
Miami-Dade	2016	RIDE	7
Miami-Dade	2016	RIDE	2
Miami-Dade	2016	RIDE	3
Miami-Dade	2016	RIDE	2
Miami-Dade	2016	RIDE	2
Miami-Dade	2016	RIDE	9
Miami-Dade	2016	RIDE	6
Miami-Dade	2016	RIDE	46
Miami-Dade	2016	RIDE	209
Miami-Dade	2016	RIDE	2
Miami-Dade	2016	RIDE	8
Miami-Dade	2016	RIDE	190
Miami-Dade	2016	RIDE	3
Miami-Dade	2016	RIDE	1
Miami-Dade	2016	RIDE	1
Miami-Dade	2016	RIDE	8
Miami-Dade	2016	RIDE	6
Miami-Dade	2016	RIDE	195
Miami-Dade	2016	RIDE	8
Miami-Dade	2016	RIDE	273
Miami-Dade	2016	RIDE	608
Miami-Dade	2016	RIDE	369
Miami-Dade	2016	RIDE	415
Miami-Dade	2016	RIDE	264
Miami-Dade	2016	RIDE	19
Miami-Dade	2016	RIDE	455
Miami-Dade	2016	RIDE	1
Miami-Dade	2016	RIDE	467
Miami-Dade	2016	RIDE	8
Miami-Dade	2016	RIDE	150
Miami-Dade	2016	RIDE	161
Miami-Dade	2016	RIDE	56
Miami-Dade	2016	RIDE	34
Miami-Dade	2016	RIDE	21
Miami-Dade	2016	RIDE	21
Miami-Dade	2016	RIDE	31

CNTYNM	YEAR	MODE	TACTCNT
Miami-Dade	2016	RIDE	1
Miami-Dade	2016	RIDE	33
Miami-Dade	2016	RIDE	28
Miami-Dade	2016	RIDE	49
Miami-Dade	2016	RIDE	56
Miami-Dade	2016	RIDE	11
Miami-Dade	2016	RIDE	3
Miami-Dade	2016	RIDE	4
Miami-Dade	2016	RIDE	5
Miami-Dade	2016	RIDE	7
Miami-Dade	2016	RIDE	269
Miami-Dade	2016	RIDE	1
Miami-Dade	2016	RIDE	10
Miami-Dade	2016	RIDE	3
Miami-Dade	2016	RIDE	9
Miami-Dade	2016	RIDE	14
Miami-Dade	2016	RIDE	34
Miami-Dade	2016	RIDE	24
Miami-Dade	2016	RIDE	100
Miami-Dade	2016	RIDE	183
Miami-Dade	2016	RIDE	115
Miami-Dade	2016	RIDE	21
Miami-Dade	2016	RIDE	104
Miami-Dade	2016	RIDE	364
Miami-Dade	2016	RIDE	4
Miami-Dade	2016	RIDE	22
Miami-Dade	2016	RIDE	53
Miami-Dade	2016	RIDE	20
Miami-Dade	2016	RIDE	1
Miami-Dade	2016	RIDE	3
Miami-Dade	2016	RIDE	3
Miami-Dade	2016	RIDE	8
Miami-Dade	2016	RIDE	35
Miami-Dade	2016	RIDE	1
Miami-Dade	2016	RIDE	1
Miami-Dade	2016	RIDE	3
Miami-Dade	2016	RIDE	7
Miami-Dade	2016	RIDE	5
Miami-Dade	2016	RIDE	4
Miami-Dade	2016	RIDE	1
Miami-Dade	2016	RIDE	29
Miami-Dade	2016	RIDE	1
Miami-Dade	2016	RIDE	8
Miami-Dade	2016	RIDE	12
Miami-Dade	2016	RIDE	1
Miami-Dade	2016	RIDE	13
Miami-Dade	2016	RIDE	3
Miami-Dade	2016	RIDE	3
Miami-Dade	2016	RIDE	5
Miami-Dade	2016	RIDE	6
Miami-Dade	2016	RIDE	2

CNTYNM	YEAR	MODE	TACTCNT
Miami-Dade	2016	RIDE	2
Miami-Dade	2016	RIDE	3
Miami-Dade	2016	RIDE	19
Miami-Dade	2016	RIDE	3
Miami-Dade	2016	RIDE	12
Miami-Dade	2016	RIDE	13
Miami-Dade	2016	RIDE	99
Miami-Dade	2016	RIDE	82
Miami-Dade	2016	RIDE	4
Miami-Dade	2016	RIDE	150
Miami-Dade	2016	RIDE	1
Miami-Dade	2016	RIDE	1
Miami-Dade	2016	RIDE	71
Miami-Dade	2016	RIDE	3
Miami-Dade	2016	RIDE	76
Miami-Dade	2016	RIDE	142
Miami-Dade	2016	RIDE	69
Miami-Dade	2016	RIDE	178
Miami-Dade	2016	RIDE	165
Miami-Dade	2016	RIDE	129
Miami-Dade	2016	RIDE	139
Miami-Dade	2016	RIDE	10
Miami-Dade	2016	RIDE	6
Miami-Dade	2016	RIDE	18
Miami-Dade	2016	RIDE	149
Miami-Dade	2016	RIDE	17
Miami-Dade	2016	RIDE	94
Miami-Dade	2016	RIDE	130
Miami-Dade	2016	RIDE	9
Miami-Dade	2016	RIDE	10
Miami-Dade	2016	RIDE	3
Miami-Dade	2016	RIDE	76
Miami-Dade	2016	RIDE	150
Miami-Dade	2016	RIDE	76
Miami-Dade	2016	RIDE	91
Miami-Dade	2016	RIDE	1
Miami-Dade	2016	RIDE	3
Miami-Dade	2016	RIDE	60
Miami-Dade	2016	RIDE	9
Miami-Dade	2016	RIDE	3
Miami-Dade	2016	RIDE	79
Miami-Dade	2016	RIDE	95
Miami-Dade	2016	RIDE	10
Miami-Dade	2016	RIDE	4
Miami-Dade	2016	RIDE	87
Miami-Dade	2016	RIDE	10
Miami-Dade	2016	RIDE	78
Miami-Dade	2016	RIDE	2
Miami-Dade	2016	RIDE	90
Miami-Dade	2016	RIDE	78
Miami-Dade	2016	RIDE	63

CNTYNM	YEAR	MODE	TACTCNT
Miami-Dade	2016	RIDE	65
Miami-Dade	2016	RIDE	64
Miami-Dade	2016	RIDE	100
Miami-Dade	2016	RIDE	91
Miami-Dade	2016	RIDE	92
Miami-Dade	2016	RIDE	69
Miami-Dade	2016	RIDE	9
Miami-Dade	2016	RIDE	53
Miami-Dade	2016	RIDE	3
Miami-Dade	2016	RIDE	1
Miami-Dade	2016	RIDE	111
Miami-Dade	2016	RIDE	5
Miami-Dade	2016	RIDE	92
Miami-Dade	2016	RIDE	2
Miami-Dade	2016	RIDE	242
Miami-Dade	2016	RIDE	10
Miami-Dade	2016	RIDE	8
Miami-Dade	2016	RIDE	852
Miami-Dade	2016	RIDE	952
Miami-Dade	2016	RIDE	816
Miami-Dade	2016	RIDE	797
Miami-Dade	2016	RIDE	813
Miami-Dade	2016	RIDE	828
Miami-Dade	2016	RIDE	836
Miami-Dade	2016	RIDE	888
Miami-Dade	2016	RIDE	12
Miami-Dade	2016	RIDE	6
Miami-Dade	2016	RIDE	279
Miami-Dade	2016	RIDE	11
Miami-Dade	2016	RIDE	6
Miami-Dade	2016	RIDE	785
Miami-Dade	2016	RIDE	8
Miami-Dade	2016	RIDE	812
Miami-Dade	2016	RIDE	7
Miami-Dade	2016	RIDE	8
Miami-Dade	2016	RIDE	10
Miami-Dade	2016	RIDE	114
Miami-Dade	2016	RIDE	14
Miami-Dade	2016	RIDE	696
Miami-Dade	2016	RIDE	6
Miami-Dade	2016	RIDE	237
Miami-Dade	2016	RIDE	215
Miami-Dade	2016	RIDE	182
Miami-Dade	2016	RIDE	184
Miami-Dade	2016	RIDE	2
Miami-Dade	2016	RIDE	232
Miami-Dade	2016	RIDE	77
Miami-Dade	2016	RIDE	338
Miami-Dade	2016	RIDE	248
Miami-Dade	2016	RIDE	152
Miami-Dade	2016	RIDE	147

CNTYNM	YEAR	MODE	TACTCNT
Miami-Dade	2016	RIDE	132
Miami-Dade	2016	RIDE	5
Miami-Dade	2016	RIDE	330
Miami-Dade	2016	RIDE	40
Miami-Dade	2016	RIDE	43
Miami-Dade	2016	RIDE	1
Miami-Dade	2016	RIDE	44
Miami-Dade	2016	RIDE	44
Miami-Dade	2016	RIDE	42
Miami-Dade	2016	RIDE	1
Miami-Dade	2016	RIDE	41
Miami-Dade	2016	RIDE	44
Miami-Dade	2016	RIDE	87
Miami-Dade	2016	RIDE	76
Miami-Dade	2016	RIDE	79
Miami-Dade	2016	RIDE	39
Miami-Dade	2016	RIDE	36
Miami-Dade	2016	RIDE	19
Miami-Dade	2016	RIDE	1
Miami-Dade	2016	RIDE	84
Miami-Dade	2016	RIDE	12
Miami-Dade	2016	RIDE	1
Miami-Dade	2016	RIDE	159
Miami-Dade	2016	RIDE	5
Miami-Dade	2016	RIDE	7
Miami-Dade	2016	RIDE	4
Miami-Dade	2016	RIDE	3
Miami-Dade	2016	RIDE	4
Miami-Dade	2016	RIDE	206
Miami-Dade	2016	RIDE	3
Miami-Dade	2016	RIDE	1
Miami-Dade	2016	RIDE	365
Miami-Dade	2016	RIDE	393
Miami-Dade	2016	RIDE	95
Miami-Dade	2016	RIDE	112
Miami-Dade	2016	RIDE	99
Miami-Dade	2016	RIDE	89
Miami-Dade	2016	RIDE	301
Miami-Dade	2016	RIDE	381
Miami-Dade	2016	RIDE	30
Miami-Dade	2016	RIDE	43
Miami-Dade	2016	RIDE	72
Miami-Dade	2016	RIDE	44
Miami-Dade	2016	RIDE	118
Miami-Dade	2016	RIDE	45
Miami-Dade	2016	RIDE	31
Miami-Dade	2016	RIDE	41
Miami-Dade	2016	RIDE	53
Miami-Dade	2016	RIDE	59
Miami-Dade	2016	RIDE	1
Miami-Dade	2016	RIDE	1

CNTYNM	YEAR	MODE	TACTCNT
Miami-Dade	2016	RIDE	136
Miami-Dade	2016	RIDE	140
Miami-Dade	2016	RIDE	78
Miami-Dade	2016	RIDE	27
Miami-Dade	2016	RIDE	20
Miami-Dade	2016	RIDE	11
Miami-Dade	2016	RIDE	4
Miami-Dade	2016	RIDE	91
Miami-Dade	2016	RIDE	37
Miami-Dade	2016	RIDE	67
Miami-Dade	2016	RIDE	100
Miami-Dade	2016	RIDE	109
Miami-Dade	2016	RIDE	27
Miami-Dade	2016	RIDE	3
Miami-Dade	2016	RIDE	8
Miami-Dade	2016	RIDE	133
Miami-Dade	2016	RIDE	134
Miami-Dade	2016	RIDE	132
Miami-Dade	2016	RIDE	112
Miami-Dade	2016	RIDE	123
Miami-Dade	2016	RIDE	2
Miami-Dade	2016	RIDE	131
Miami-Dade	2016	RIDE	120
Miami-Dade	2016	RIDE	42
Miami-Dade	2016	RIDE	367
Miami-Dade	2016	RIDE	48
Miami-Dade	2016	RIDE	450
Miami-Dade	2016	RIDE	157
Miami-Dade	2016	RIDE	104
Miami-Dade	2016	RIDE	108
Miami-Dade	2016	RIDE	61
Miami-Dade	2016	RIDE	71
Miami-Dade	2016	RIDE	67
Miami-Dade	2016	RIDE	174
Miami-Dade	2016	RIDE	185
Miami-Dade	2016	RIDE	117
Miami-Dade	2016	RIDE	120
Miami-Dade	2016	RIDE	220
Miami-Dade	2016	RIDE	149
Miami-Dade	2016	RIDE	137
Miami-Dade	2016	RIDE	652
Miami-Dade	2016	RIDE	942
Miami-Dade	2016	RIDE	804
Miami-Dade	2016	RIDE	751
Miami-Dade	2016	RIDE	53
Miami-Dade	2016	RIDE	1
Miami-Dade	2016	RIDE	52
Miami-Dade	2016	RIDE	243
Miami-Dade	2016	RIDE	319
Miami-Dade	2016	RIDE	1
Miami-Dade	2016	RIDE	1

CNTYNM	YEAR	MODE	TACTCNT
Miami-Dade	2016	RIDE	7
Miami-Dade	2016	RIDE	5
Miami-Dade	2016	RIDE	125
Miami-Dade	2016	RIDE	384
Miami-Dade	2016	RIDE	460
Miami-Dade	2016	RIDE	374
Miami-Dade	2016	RIDE	330
Miami-Dade	2016	RIDE	10
Miami-Dade	2016	RIDE	9
Miami-Dade	2016	RIDE	1
Miami-Dade	2016	RIDE	158
Miami-Dade	2016	RIDE	27
Miami-Dade	2016	RIDE	213
Miami-Dade	2016	RIDE	9
Miami-Dade	2016	RIDE	38
Miami-Dade	2016	RIDE	8
Miami-Dade	2016	RIDE	66
Miami-Dade	2016	RIDE	74
Miami-Dade	2016	RIDE	128
Miami-Dade	2016	RIDE	140
Miami-Dade	2016	RIDE	150
Miami-Dade	2016	RIDE	148
Miami-Dade	2016	RIDE	54
Miami-Dade	2016	RIDE	75
Miami-Dade	2016	RIDE	64
Miami-Dade	2016	RIDE	60
Miami-Dade	2016	RIDE	60
Miami-Dade	2016	RIDE	56
Miami-Dade	2016	RIDE	48
Miami-Dade	2016	RIDE	162
Miami-Dade	2016	RIDE	162
Miami-Dade	2016	RIDE	260
Miami-Dade	2016	RIDE	242
Miami-Dade	2016	RIDE	231
Miami-Dade	2016	RIDE	99
Miami-Dade	2016	RIDE	115
Miami-Dade	2016	RIDE	107
Miami-Dade	2016	RIDE	118
Miami-Dade	2016	RIDE	201
Miami-Dade	2016	RIDE	198
Miami-Dade	2016	RIDE	200
Miami-Dade	2016	RIDE	83
Miami-Dade	2016	RIDE	118
Miami-Dade	2016	RIDE	238
Miami-Dade	2016	RIDE	89
Miami-Dade	2016	RIDE	343
Miami-Dade	2016	RIDE	295
Miami-Dade	2016	RIDE	165
Miami-Dade	2016	RIDE	167
Miami-Dade	2016	RIDE	242
Miami-Dade	2016	RIDE	271

CNTYNM	YEAR	MODE	TACTCNT
Miami-Dade	2016	RIDE	177
Miami-Dade	2016	RIDE	167
Miami-Dade	2016	RIDE	970
Miami-Dade	2016	RIDE	934
Miami-Dade	2016	RIDE	297
Miami-Dade	2016	RIDE	290
Miami-Dade	2016	RIDE	799
Miami-Dade	2016	RIDE	780
Miami-Dade	2016	RIDE	112
Miami-Dade	2016	RIDE	81
Miami-Dade	2016	RIDE	78
Miami-Dade	2016	RIDE	218
Miami-Dade	2016	RIDE	474
Miami-Dade	2016	RIDE	604
Miami-Dade	2016	RIDE	320
Miami-Dade	2016	RIDE	281
Miami-Dade	2016	RIDE	257
Miami-Dade	2016	RIDE	231
Miami-Dade	2016	RIDE	397
Miami-Dade	2016	RIDE	234
Miami-Dade	2016	RIDE	234
Miami-Dade	2016	RIDE	243
Miami-Dade	2016	RIDE	253
Miami-Dade	2016	RIDE	285
Miami-Dade	2016	RIDE	115
Miami-Dade	2016	RIDE	111
Miami-Dade	2016	RIDE	123
Miami-Dade	2016	RIDE	135
Miami-Dade	2016	RIDE	7
Miami-Dade	2016	RIDE	7
Miami-Dade	2016	RIDE	158
Miami-Dade	2016	RIDE	145
Miami-Dade	2016	RIDE	201
Miami-Dade	2016	RIDE	65
Miami-Dade	2016	RIDE	67
Miami-Dade	2016	RIDE	62
Miami-Dade	2016	RIDE	338
Miami-Dade	2016	RIDE	119
Miami-Dade	2016	RIDE	117
Miami-Dade	2016	RIDE	49
Miami-Dade	2016	RIDE	113
Miami-Dade	2016	RIDE	113
Miami-Dade	2016	RIDE	12
Miami-Dade	2016	RIDE	12
Miami-Dade	2016	RIDE	141
Miami-Dade	2016	RIDE	65
Miami-Dade	2016	RIDE	71
Miami-Dade	2016	RIDE	25
Miami-Dade	2016	RIDE	56
Miami-Dade	2016	RIDE	89
Miami-Dade	2016	RIDE	52

CNTYNM	YEAR	MODE	TACTCNT
Miami-Dade	2016	RIDE	76
Miami-Dade	2016	RIDE	77
Miami-Dade	2016	RIDE	83
Miami-Dade	2016	RIDE	48
Miami-Dade	2016	RIDE	90
Miami-Dade	2016	RIDE	109
Miami-Dade	2016	RIDE	113
Miami-Dade	2016	RIDE	64
Miami-Dade	2016	RIDE	42
Miami-Dade	2016	RIDE	72
Miami-Dade	2016	RIDE	96
Miami-Dade	2016	RIDE	113
Miami-Dade	2016	RIDE	210
Miami-Dade	2016	RIDE	193
Miami-Dade	2016	RIDE	163
Miami-Dade	2016	RIDE	3
Miami-Dade	2016	RIDE	780
Miami-Dade	2016	RIDE	5
Miami-Dade	2016	RIDE	23
Miami-Dade	2016	RIDE	21
Miami-Dade	2016	RIDE	347
Miami-Dade	2016	RIDE	156
Miami-Dade	2016	RIDE	133
Miami-Dade	2016	RIDE	115
Miami-Dade	2016	RIDE	116
Miami-Dade	2016	RIDE	108
Miami-Dade	2016	RIDE	27
Miami-Dade	2016	RIDE	7
Miami-Dade	2016	RIDE	4
Miami-Dade	2016	RIDE	13
Miami-Dade	2016	RIDE	15
Miami-Dade	2016	RIDE	9
Miami-Dade	2016	RIDE	7
Miami-Dade	2016	RIDE	13
Miami-Dade	2016	RIDE	4
Miami-Dade	2016	RIDE	9
Miami-Dade	2016	RIDE	6
Miami-Dade	2016	RIDE	12
Miami-Dade	2016	RIDE	5
Miami-Dade	2016	RIDE	4
Miami-Dade	2016	RIDE	2
Miami-Dade	2016	RIDE	2
Miami-Dade	2016	RIDE	3
Miami-Dade	2016	RIDE	5
Miami-Dade	2016	RIDE	9
Miami-Dade	2016	RIDE	1
Miami-Dade	2016	RIDE	5
Miami-Dade	2016	RIDE	6
Miami-Dade	2016	RIDE	17
Miami-Dade	2016	RIDE	26
Miami-Dade	2016	RIDE	12

CNTYNM	YEAR	MODE	TACTCNT
Miami-Dade	2016	RIDE	9
Miami-Dade	2016	RIDE	12
Miami-Dade	2016	RIDE	13
Miami-Dade	2016	RIDE	29
Miami-Dade	2016	RIDE	5
Miami-Dade	2016	RIDE	2
Miami-Dade	2016	RIDE	26
Miami-Dade	2016	RIDE	7
Miami-Dade	2016	RIDE	6
Miami-Dade	2016	RIDE	4
Miami-Dade	2016	RIDE	2
Miami-Dade	2016	RIDE	22
Miami-Dade	2016	RIDE	2
Miami-Dade	2016	RIDE	6
Miami-Dade	2016	RIDE	3
Miami-Dade	2016	RIDE	6
Miami-Dade	2016	RIDE	4
Miami-Dade	2016	RIDE	2
Miami-Dade	2016	RIDE	3
Miami-Dade	2016	RIDE	1
Miami-Dade	2016	RIDE	1
Miami-Dade	2016	RIDE	3
Miami-Dade	2016	RIDE	2
Miami-Dade	2016	RIDE	6
Miami-Dade	2016	RIDE	3
Miami-Dade	2016	RIDE	7
Miami-Dade	2016	RIDE	4
Miami-Dade	2016	RIDE	3
Miami-Dade	2016	RIDE	3
Miami-Dade	2016	RIDE	4
Miami-Dade	2016	RIDE	2
Miami-Dade	2016	RIDE	5
Miami-Dade	2016	RIDE	7
Miami-Dade	2016	RIDE	7
Miami-Dade	2016	RIDE	2
Miami-Dade	2016	RIDE	3
Miami-Dade	2016	RIDE	7
Miami-Dade	2016	RIDE	6
Miami-Dade	2016	RIDE	2
Miami-Dade	2016	RIDE	1
Miami-Dade	2016	RIDE	2
Miami-Dade	2016	RIDE	1
Miami-Dade	2016	RIDE	4
Miami-Dade	2016	RIDE	1
Miami-Dade	2016	RIDE	1
Miami-Dade	2016	RIDE	3
Miami-Dade	2016	RIDE	7
Miami-Dade	2016	RIDE	6
Miami-Dade	2016	RIDE	7
Miami-Dade	2016	RIDE	5
Miami-Dade	2016	RIDE	6

CNTYNM	YEAR	MODE	TACTCNT
Miami-Dade	2016	RIDE	5
Miami-Dade	2016	RIDE	4
Miami-Dade	2016	RIDE	3
Miami-Dade	2016	RIDE	1
Miami-Dade	2016	RIDE	3
Miami-Dade	2016	RIDE	75
Miami-Dade	2016	RIDE	71
Miami-Dade	2016	RIDE	3
Miami-Dade	2016	RIDE	2
Miami-Dade	2016	RIDE	1
Miami-Dade	2016	RIDE	5
Miami-Dade	2016	RIDE	2
Miami-Dade	2016	RIDE	2
Miami-Dade	2016	RIDE	6
Miami-Dade	2016	RIDE	3
Miami-Dade	2016	RIDE	7
Miami-Dade	2016	RIDE	20
Miami-Dade	2016	RIDE	4
Miami-Dade	2016	RIDE	621
Miami-Dade	2016	RIDE	452
Miami-Dade	2016	RIDE	253
Miami-Dade	2016	RIDE	88
Miami-Dade	2016	RIDE	154
Miami-Dade	2016	RIDE	154
Miami-Dade	2016	RIDE	173
Miami-Dade	2016	RIDE	180
Miami-Dade	2016	RIDE	7
Miami-Dade	2016	RIDE	7
Miami-Dade	2016	RIDE	34
Miami-Dade	2016	RIDE	61
Miami-Dade	2016	RIDE	20
Miami-Dade	2016	RIDE	164
Miami-Dade	2016	RIDE	170
Miami-Dade	2016	RIDE	169
Miami-Dade	2016	RIDE	222
Miami-Dade	2016	RIDE	217
Miami-Dade	2016	RIDE	229
Miami-Dade	2016	RIDE	4
Miami-Dade	2016	RIDE	3
Miami-Dade	2016	RIDE	137
Miami-Dade	2016	RIDE	137
Miami-Dade	2016	RIDE	1
Miami-Dade	2016	RIDE	864
Miami-Dade	2016	RIDE	837
Miami-Dade	2016	RIDE	773
Miami-Dade	2016	RIDE	719
Miami-Dade	2016	RIDE	6
Miami-Dade	2016	RIDE	849
Miami-Dade	2016	RIDE	862
Miami-Dade	2016	RIDE	722
Miami-Dade	2016	RIDE	750

CNTYNM	YEAR	MODE	TACTCNT
Miami-Dade	2016	RIDE	3
Miami-Dade	2016	RIDE	219
Miami-Dade	2016	RIDE	363
Miami-Dade	2016	RIDE	24
Miami-Dade	2016	RIDE	246
Miami-Dade	2016	RIDE	204
Miami-Dade	2016	RIDE	2
Miami-Dade	2016	RIDE	279
Miami-Dade	2016	RIDE	106
Miami-Dade	2016	RIDE	3
Miami-Dade	2016	RIDE	57
Miami-Dade	2016	RIDE	184
Miami-Dade	2016	RIDE	2
Miami-Dade	2016	RIDE	240
Miami-Dade	2016	RIDE	189
Miami-Dade	2016	RIDE	61
Miami-Dade	2016	RIDE	56
Miami-Dade	2016	RIDE	3
Miami-Dade	2016	RIDE	104
Miami-Dade	2016	RIDE	39
Miami-Dade	2016	RIDE	46
Miami-Dade	2016	RIDE	2
Miami-Dade	2016	RIDE	2
Miami-Dade	2016	RIDE	39
Miami-Dade	2016	RIDE	1
Miami-Dade	2016	RIDE	36
Miami-Dade	2016	RIDE	37
Miami-Dade	2016	RIDE	1
Miami-Dade	2016	RIDE	297
Miami-Dade	2016	RIDE	358
Miami-Dade	2016	RIDE	282
Miami-Dade	2016	RIDE	395
Miami-Dade	2016	RIDE	282
Miami-Dade	2016	RIDE	296
Miami-Dade	2016	RIDE	132
Miami-Dade	2016	RIDE	126
Miami-Dade	2016	RIDE	10
Miami-Dade	2016	RIDE	5
Miami-Dade	2016	RIDE	2
Miami-Dade	2016	RIDE	6
Miami-Dade	2016	RIDE	4
Miami-Dade	2016	RIDE	1
Miami-Dade	2016	RIDE	9
Miami-Dade	2016	RIDE	8
Miami-Dade	2016	RIDE	20
Miami-Dade	2016	RIDE	13
Miami-Dade	2016	RIDE	5
Miami-Dade	2016	RIDE	4
Miami-Dade	2016	RIDE	47
Miami-Dade	2016	RIDE	82
Miami-Dade	2016	RIDE	409

CNTYNM	YEAR	MODE	TACTCNT
Miami-Dade	2016	RIDE	5
Miami-Dade	2016	RIDE	82
Miami-Dade	2016	RIDE	79
Miami-Dade	2016	RIDE	5
Miami-Dade	2016	RIDE	4
Miami-Dade	2016	RIDE	427
Miami-Dade	2016	RIDE	11
Miami-Dade	2016	RIDE	6
Miami-Dade	2016	RIDE	22
Miami-Dade	2016	RIDE	4
Miami-Dade	2016	RIDE	3
Miami-Dade	2016	RIDE	7
Miami-Dade	2016	RIDE	20
Miami-Dade	2016	RIDE	1
Miami-Dade	2016	RIDE	17
Miami-Dade	2016	RIDE	17
Miami-Dade	2016	RIDE	7
Miami-Dade	2016	RIDE	4
Miami-Dade	2016	RIDE	5
Miami-Dade	2016	RIDE	3
Miami-Dade	2016	RIDE	3
Miami-Dade	2016	RIDE	23
Miami-Dade	2016	RIDE	165
Miami-Dade	2016	RIDE	23
Miami-Dade	2016	RIDE	4
Miami-Dade	2016	RIDE	3
Miami-Dade	2016	RIDE	3
Miami-Dade	2016	RIDE	4
Miami-Dade	2016	RIDE	1
Miami-Dade	2016	RIDE	1
Miami-Dade	2016	RIDE	66
Miami-Dade	2016	RIDE	8
Miami-Dade	2016	RIDE	17
Miami-Dade	2016	RIDE	14
Miami-Dade	2016	RIDE	3
Miami-Dade	2016	RIDE	1
Miami-Dade	2016	RIDE	314
Miami-Dade	2016	RIDE	191
Miami-Dade	2016	RIDE	216
Miami-Dade	2016	RIDE	612
Miami-Dade	2016	RIDE	587
Miami-Dade	2016	RIDE	195
Miami-Dade	2016	RIDE	173
Miami-Dade	2016	RIDE	822
Miami-Dade	2016	RIDE	853
Miami-Dade	2016	RIDE	148
Miami-Dade	2016	RIDE	164
Miami-Dade	2016	RIDE	115
Miami-Dade	2016	RIDE	141
Miami-Dade	2016	RIDE	118
Miami-Dade	2016	RIDE	107

CNTYNM	YEAR	MODE	TACTCNT
Miami-Dade	2016	RIDE	32
Miami-Dade	2016	RIDE	33
Miami-Dade	2016	RIDE	34
Miami-Dade	2016	RIDE	2
Miami-Dade	2016	RIDE	2
Miami-Dade	2016	RIDE	226
Miami-Dade	2016	RIDE	241
Miami-Dade	2016	RIDE	100
Miami-Dade	2016	RIDE	102
Miami-Dade	2016	RIDE	107
Miami-Dade	2016	RIDE	103
Miami-Dade	2016	RIDE	144
Miami-Dade	2016	RIDE	143
Miami-Dade	2016	RIDE	4
Miami-Dade	2016	RIDE	5
Miami-Dade	2016	RIDE	36
Miami-Dade	2016	RIDE	35
Miami-Dade	2016	RIDE	62
Miami-Dade	2016	RIDE	64
Miami-Dade	2016	RIDE	858
Miami-Dade	2016	RIDE	817
Miami-Dade	2016	RIDE	3
Miami-Dade	2016	RIDE	3
Miami-Dade	2016	RIDE	939
Miami-Dade	2016	RIDE	913
Miami-Dade	2016	RIDE	18
Miami-Dade	2016	RIDE	15
Miami-Dade	2016	RIDE	101
Miami-Dade	2016	RIDE	118
Miami-Dade	2016	RIDE	108
Miami-Dade	2016	RIDE	169
Miami-Dade	2016	RIDE	53
Miami-Dade	2016	RIDE	130
Miami-Dade	2016	RIDE	120
Miami-Dade	2016	RIDE	59
Miami-Dade	2016	RIDE	62
Miami-Dade	2016	RIDE	11
Miami-Dade	2016	RIDE	12
Miami-Dade	2016	RIDE	96
Miami-Dade	2016	RIDE	97
Miami-Dade	2016	RIDE	200
Miami-Dade	2016	RIDE	217
Miami-Dade	2016	RIDE	259
Miami-Dade	2016	RIDE	143
Miami-Dade	2016	RIDE	157
Miami-Dade	2016	RIDE	21
Miami-Dade	2016	RIDE	26
Miami-Dade	2016	RIDE	138
Miami-Dade	2016	RIDE	143
Miami-Dade	2016	RIDE	80
Miami-Dade	2016	RIDE	86

CNTYNM	YEAR	MODE	TACTCNT
Miami-Dade	2016	RIDE	44
Miami-Dade	2016	RIDE	60
Miami-Dade	2016	RIDE	7
Miami-Dade	2016	RIDE	31
Miami-Dade	2016	RIDE	74
Miami-Dade	2016	RIDE	81
Miami-Dade	2016	RIDE	355
Miami-Dade	2016	RIDE	41
Miami-Dade	2016	RIDE	60
Miami-Dade	2016	RIDE	401
Miami-Dade	2016	RIDE	341
Miami-Dade	2016	RIDE	11
Miami-Dade	2016	RIDE	369
Miami-Dade	2016	RIDE	329
Miami-Dade	2016	RIDE	337
Miami-Dade	2016	RIDE	56
Miami-Dade	2016	RIDE	22
Miami-Dade	2016	RIDE	1
Miami-Dade	2016	RIDE	2
Miami-Dade	2016	RIDE	88
Miami-Dade	2016	RIDE	111
Miami-Dade	2016	RIDE	60
Miami-Dade	2016	RIDE	77
Miami-Dade	2016	RIDE	3
Miami-Dade	2016	RIDE	3
Miami-Dade	2016	RIDE	104
Miami-Dade	2016	RIDE	2
Miami-Dade	2016	RIDE	2
Miami-Dade	2016	RIDE	3
Miami-Dade	2016	RIDE	3
Miami-Dade	2016	RIDE	8
Miami-Dade	2016	RIDE	53
Miami-Dade	2016	RIDE	48
Miami-Dade	2016	RIDE	52
Miami-Dade	2016	RIDE	55
Miami-Dade	2016	RIDE	235
Miami-Dade	2016	RIDE	3
Miami-Dade	2016	RIDE	3
Miami-Dade	2016	RIDE	3
Miami-Dade	2016	RIDE	4
Miami-Dade	2016	RIDE	1
Miami-Dade	2016	RIDE	4
Miami-Dade	2016	RIDE	5
Miami-Dade	2016	RIDE	2
Miami-Dade	2016	RIDE	6
Miami-Dade	2016	RIDE	4
Miami-Dade	2016	RIDE	3
Miami-Dade	2016	RIDE	4
Miami-Dade	2016	RIDE	7
Miami-Dade	2016	RIDE	3
Miami-Dade	2016	RIDE	8

CNTYNM	YEAR	MODE	TACTCNT
Miami-Dade	2016	RIDE	1
Miami-Dade	2016	RIDE	2
Miami-Dade	2016	RIDE	6
Miami-Dade	2016	RIDE	6
Miami-Dade	2016	RIDE	10
Miami-Dade	2016	RIDE	1
Miami-Dade	2016	RIDE	16
Miami-Dade	2016	RIDE	4
Miami-Dade	2016	RIDE	3
Miami-Dade	2016	RIDE	1
Miami-Dade	2016	RIDE	9
Miami-Dade	2016	RIDE	21
Miami-Dade	2016	RIDE	6
Miami-Dade	2016	RIDE	2
Miami-Dade	2016	RIDE	2
Miami-Dade	2016	RIDE	5
Miami-Dade	2016	RIDE	1
Miami-Dade	2016	RIDE	1
Miami-Dade	2016	RIDE	10
Miami-Dade	2016	RIDE	4
Miami-Dade	2016	RIDE	1
Miami-Dade	2016	RIDE	1
Miami-Dade	2016	RIDE	1
Miami-Dade	2016	RIDE	1
Miami-Dade	2016	RIDE	12
Miami-Dade	2016	RIDE	10
Miami-Dade	2016	RIDE	8
Miami-Dade	2016	RIDE	14
Miami-Dade	2016	RIDE	17
Miami-Dade	2016	RIDE	28
Miami-Dade	2016	RIDE	3
Miami-Dade	2016	RIDE	2
Miami-Dade	2016	RIDE	3
Miami-Dade	2016	RIDE	3
Miami-Dade	2016	RIDE	89
Miami-Dade	2016	RIDE	88
Miami-Dade	2016	RIDE	6
Miami-Dade	2016	RIDE	65
Miami-Dade	2016	RIDE	61
Miami-Dade	2016	RIDE	82
Miami-Dade	2016	RIDE	92
Miami-Dade	2016	RIDE	58
Miami-Dade	2016	RIDE	95
Miami-Dade	2016	RIDE	71
Miami-Dade	2016	RIDE	83
Miami-Dade	2016	RIDE	1
Miami-Dade	2016	RIDE	45
Miami-Dade	2016	RIDE	55
Miami-Dade	2016	RIDE	64
Miami-Dade	2016	RIDE	63
Miami-Dade	2016	RIDE	2

CNTYNM	YEAR	MODE	TACTCNT
Miami-Dade	2016	RIDE	5
Miami-Dade	2016	RIDE	2
Miami-Dade	2016	RIDE	70
Miami-Dade	2016	RIDE	90
Miami-Dade	2016	RIDE	47
Miami-Dade	2016	RIDE	57
Miami-Dade	2016	RIDE	4
Miami-Dade	2016	RIDE	80
Miami-Dade	2016	RIDE	78
Miami-Dade	2016	RIDE	131
Miami-Dade	2016	RIDE	113
Miami-Dade	2016	RIDE	2
Miami-Dade	2016	RIDE	3
Miami-Dade	2016	RIDE	43
Miami-Dade	2016	RIDE	22
Miami-Dade	2016	RIDE	19
Miami-Dade	2016	RIDE	18
Miami-Dade	2016	RIDE	2
Miami-Dade	2016	RIDE	1
Miami-Dade	2016	RIDE	4
Miami-Dade	2016	RIDE	3
Miami-Dade	2016	RIDE	17
Miami-Dade	2016	RIDE	2
Miami-Dade	2016	RIDE	2
Miami-Dade	2016	RIDE	110
Miami-Dade	2016	RIDE	108
Miami-Dade	2016	RIDE	2
Miami-Dade	2016	RIDE	3
Miami-Dade	2016	RIDE	21
Miami-Dade	2016	RIDE	23
Miami-Dade	2016	RIDE	3
Miami-Dade	2016	RIDE	3
Miami-Dade	2016	RIDE	19
Miami-Dade	2016	RIDE	19
Miami-Dade	2016	RIDE	1
Miami-Dade	2016	RIDE	26
Miami-Dade	2016	RIDE	2
Miami-Dade	2016	RIDE	2
Miami-Dade	2016	RIDE	2
Miami-Dade	2016	RIDE	2
Miami-Dade	2016	RIDE	45
Miami-Dade	2016	RIDE	34
Miami-Dade	2016	RIDE	3
Miami-Dade	2016	RIDE	35
Miami-Dade	2016	RIDE	37
Miami-Dade	2016	RIDE	20
Miami-Dade	2016	RIDE	20
Miami-Dade	2016	RIDE	1
Miami-Dade	2016	RIDE	3
Miami-Dade	2016	RIDE	1
Miami-Dade	2016	RIDE	3

CNTYNM	YEAR	MODE	TACTCNT
Miami-Dade	2016	RIDE	2
Miami-Dade	2016	RIDE	2
Miami-Dade	2016	RIDE	1
Miami-Dade	2016	RIDE	15
Miami-Dade	2016	RIDE	3
Miami-Dade	2016	RIDE	14
Miami-Dade	2016	RIDE	1
Miami-Dade	2016	RIDE	13
Miami-Dade	2016	RIDE	19
Miami-Dade	2016	RIDE	13
Miami-Dade	2016	RIDE	16
Miami-Dade	2016	RIDE	1
Miami-Dade	2016	RIDE	6
Miami-Dade	2016	RIDE	10
Miami-Dade	2016	RIDE	1
Miami-Dade	2016	RIDE	2
Miami-Dade	2016	RIDE	17
Miami-Dade	2016	RIDE	18
Miami-Dade	2016	RIDE	18
Miami-Dade	2016	RIDE	71
Miami-Dade	2016	RIDE	63
Miami-Dade	2016	RIDE	3
Miami-Dade	2016	RIDE	15
Miami-Dade	2016	RIDE	16
Miami-Dade	2016	RIDE	28
Miami-Dade	2016	RIDE	2
Miami-Dade	2016	RIDE	18
Miami-Dade	2016	RIDE	17
Miami-Dade	2016	RIDE	4
Miami-Dade	2016	RIDE	1
Miami-Dade	2016	RIDE	18
Miami-Dade	2016	RIDE	1
Miami-Dade	2016	RIDE	1
Miami-Dade	2016	RIDE	11
Miami-Dade	2016	RIDE	47
Miami-Dade	2016	RIDE	47
Miami-Dade	2016	RIDE	17
Miami-Dade	2016	RIDE	18
Miami-Dade	2016	RIDE	14
Miami-Dade	2016	RIDE	33
Miami-Dade	2016	RIDE	3
Miami-Dade	2016	RIDE	3
Miami-Dade	2016	RIDE	33
Miami-Dade	2016	RIDE	33
Miami-Dade	2016	RIDE	33
Miami-Dade	2016	RIDE	104
Miami-Dade	2016	RIDE	113
Miami-Dade	2016	RIDE	9
Miami-Dade	2016	RIDE	34
Miami-Dade	2016	RIDE	13
Miami-Dade	2016	RIDE	37

CNTYNM	YEAR	MODE	TACTCNT
Miami-Dade	2016	RIDE	34
Miami-Dade	2016	RIDE	1
Miami-Dade	2016	RIDE	27
Miami-Dade	2016	RIDE	3
Miami-Dade	2016	RIDE	8
Miami-Dade	2016	RIDE	3
Miami-Dade	2016	RIDE	8
Miami-Dade	2016	RIDE	57
Miami-Dade	2016	RIDE	44
Miami-Dade	2016	RIDE	57
Miami-Dade	2016	RIDE	1
Miami-Dade	2016	RIDE	5
Miami-Dade	2016	RIDE	71
Miami-Dade	2016	RIDE	65
Miami-Dade	2016	RIDE	9
Miami-Dade	2016	RIDE	37
Miami-Dade	2016	RIDE	48
Miami-Dade	2016	RIDE	19
Miami-Dade	2016	RIDE	5
Miami-Dade	2016	RIDE	299
Miami-Dade	2016	RIDE	259
Miami-Dade	2016	RIDE	7
Miami-Dade	2016	RIDE	282
Miami-Dade	2016	RIDE	302
Miami-Dade	2016	RIDE	5
Miami-Dade	2016	RIDE	280
Miami-Dade	2016	RIDE	270
Miami-Dade	2016	RIDE	1
Miami-Dade	2016	RIDE	1
Miami-Dade	2016	RIDE	89
Miami-Dade	2016	RIDE	123
Miami-Dade	2016	RIDE	1
Miami-Dade	2016	RIDE	388
Miami-Dade	2016	RIDE	434
Miami-Dade	2016	RIDE	120
Miami-Dade	2016	RIDE	114
Miami-Dade	2016	RIDE	262
Miami-Dade	2016	RIDE	238
Miami-Dade	2016	RIDE	116
Miami-Dade	2016	RIDE	114
Miami-Dade	2016	RIDE	10
Miami-Dade	2016	RIDE	1
Miami-Dade	2016	RIDE	4
Miami-Dade	2016	RIDE	5
Miami-Dade	2016	RIDE	29
Miami-Dade	2016	RIDE	5
Miami-Dade	2016	RIDE	40
Miami-Dade	2016	RIDE	6
Miami-Dade	2016	RIDE	53
Miami-Dade	2016	RIDE	109
Miami-Dade	2016	RIDE	203

CNTYNM	YEAR	MODE	TACTCNT
Miami-Dade	2016	RIDE	153
Miami-Dade	2016	RIDE	131
Miami-Dade	2016	RIDE	128
Miami-Dade	2016	RIDE	3
Miami-Dade	2016	RIDE	7
Miami-Dade	2016	RIDE	1
Miami-Dade	2016	RIDE	67
Miami-Dade	2016	RIDE	79
Miami-Dade	2016	RIDE	25
Miami-Dade	2016	RIDE	28
Miami-Dade	2016	RIDE	2
Miami-Dade	2016	RIDE	2
Miami-Dade	2016	RIDE	4
Miami-Dade	2016	RIDE	4
Miami-Dade	2016	RIDE	4
Miami-Dade	2016	RIDE	5
Miami-Dade	2016	RIDE	6
Miami-Dade	2016	RIDE	9
Miami-Dade	2016	RIDE	5
Miami-Dade	2016	RIDE	4
Miami-Dade	2016	RIDE	2
Miami-Dade	2016	RIDE	12
Miami-Dade	2016	RIDE	19
Miami-Dade	2016	RIDE	2
Miami-Dade	2016	RIDE	15
Miami-Dade	2016	RIDE	17
Miami-Dade	2016	RIDE	2
Miami-Dade	2016	RIDE	64
Miami-Dade	2016	RIDE	57
Miami-Dade	2016	RIDE	179
Miami-Dade	2016	RIDE	222
Miami-Dade	2016	RIDE	1
Miami-Dade	2016	RIDE	1
Miami-Dade	2016	RIDE	27
Miami-Dade	2016	RIDE	19
Miami-Dade	2016	RIDE	16
Miami-Dade	2016	RIDE	3
Miami-Dade	2016	RIDE	1
Miami-Dade	2016	RIDE	16
Miami-Dade	2016	RIDE	119
Miami-Dade	2016	RIDE	116
Miami-Dade	2016	RIDE	173
Miami-Dade	2016	RIDE	147
Miami-Dade	2016	RIDE	119
Miami-Dade	2016	RIDE	116
Miami-Dade	2016	RIDE	28
Miami-Dade	2016	RIDE	45
Miami-Dade	2016	RIDE	79
Miami-Dade	2016	RIDE	85
Miami-Dade	2016	RIDE	6
Miami-Dade	2016	RIDE	6

CNTYNM	YEAR	MODE	TACTCNT
Miami-Dade	2016	RIDE	3
Miami-Dade	2016	RIDE	110
Miami-Dade	2016	RIDE	151
Miami-Dade	2016	RIDE	9
Miami-Dade	2016	RIDE	9
Miami-Dade	2016	RIDE	5
Miami-Dade	2016	RIDE	5
Miami-Dade	2016	RIDE	126
Miami-Dade	2016	RIDE	124
Miami-Dade	2016	RIDE	145
Miami-Dade	2016	RIDE	146
Miami-Dade	2016	RIDE	120
Miami-Dade	2016	RIDE	117
Miami-Dade	2016	RIDE	4
Miami-Dade	2016	RIDE	2
Miami-Dade	2016	RIDE	4
Miami-Dade	2016	RIDE	1
Miami-Dade	2016	RIDE	296
Miami-Dade	2016	RIDE	245
Miami-Dade	2016	RIDE	66
Miami-Dade	2016	RIDE	79
Miami-Dade	2016	RIDE	1
Miami-Dade	2016	RIDE	1
Miami-Dade	2016	RIDE	1
Miami-Dade	2016	RIDE	81
Miami-Dade	2016	RIDE	121
Miami-Dade	2016	RIDE	87
Miami-Dade	2016	RIDE	1
Miami-Dade	2016	RIDE	281
Miami-Dade	2016	RIDE	275
Miami-Dade	2016	RIDE	141
Miami-Dade	2016	RIDE	135
Miami-Dade	2016	RIDE	1
Miami-Dade	2016	RIDE	118
Miami-Dade	2016	RIDE	96
Miami-Dade	2016	RIDE	1
Miami-Dade	2016	RIDE	154
Miami-Dade	2016	RIDE	237
Miami-Dade	2016	RIDE	18
Miami-Dade	2016	RIDE	15
Miami-Dade	2016	RIDE	12
Miami-Dade	2016	RIDE	11
Miami-Dade	2016	RIDE	39
Miami-Dade	2016	RIDE	96
Miami-Dade	2016	RIDE	96
Miami-Dade	2016	RIDE	1
Miami-Dade	2016	RIDE	71
Miami-Dade	2016	RIDE	158
Miami-Dade	2016	RIDE	53
Miami-Dade	2016	RIDE	45

Appendix K – SERPM Model Diverted Trips to Trail Analysis

From	To	ea	am	md	pm	ev
3654	3915	0	0	0	0	0
3654	3916	0	0	0	0	0
3654	4017	0	0	4	0	0
3654	4021	0	12	4	4	0
3654	3914	0	0	4	0	0
3654	4026	0	0	0	8	4
3654	4023	0	0	0	0	0
3654	4022	0	0	0	0	0
3654	3913	0	0	0	0	0
3654	3912	4	8	0	8	0
3654	4024	0	0	4	0	0
3654	4025	4	0	0	0	0
3654	4068	0	4	0	0	0
3654	3917	0	0	0	4	0
3654	3918	0	0	0	0	0
3654	4046	0	0	4	0	0
3710	3915	0	0	0	0	0
3710	3916	0	0	0	0	0
3710	4017	0	0	0	0	0
3710	4021	0	0	0	0	0
3710	3914	0	0	0	0	0
3710	4026	0	0	0	0	0
3710	4023	0	0	0	0	0
3710	4022	0	0	0	0	0
3710	3913	0	0	0	0	0
3710	3912	0	0	0	0	0
3710	4024	0	0	0	0	0
3710	4025	0	0	0	0	0
3710	4068	0	0	0	0	0
3710	3917	0	0	0	0	0
3710	3918	0	0	0	0	0
3710	4046	4	0	0	0	0
3711	3915	0	0	0	0	0
3711	3916	0	0	0	0	0
3711	4017	0	0	0	0	0
3711	4021	0	0	0	4	0
3711	3914	0	0	0	0	0
3711	4026	0	0	0	0	0
3711	4023	0	0	0	0	0
3711	4022	0	0	0	4	0
3711	3913	0	0	0	0	0
3711	3912	0	0	0	8	0
3711	4024	0	0	0	0	0
3711	4025	0	0	0	0	0
3711	4068	0	0	0	0	0
3711	3917	0	0	0	0	0

From	To	ea	am	md	pm	ev
3711	3918	0	0	0	0	0
3711	4046	0	0	0	0	0
3707	3915	0	0	0	0	0
3707	3916	0	0	0	0	0
3707	4017	0	4	0	0	0
3707	4021	0	0	0	0	0
3707	3914	0	0	0	0	0
3707	4026	0	0	0	0	0
3707	4023	0	0	0	0	0
3707	4022	0	0	0	0	0
3707	3913	0	4	0	0	0
3707	3912	0	0	0	0	0
3707	4024	0	0	0	0	0
3707	4025	0	0	0	0	0
3707	4068	0	0	0	0	0
3707	3917	0	0	0	0	0
3707	3918	0	0	0	0	0
3707	4046	0	4	0	0	0
3706	3915	0	0	0	0	0
3706	3916	0	0	0	0	0
3706	4017	0	0	0	4	0
3706	4021	0	0	4	0	0
3706	3914	0	0	0	0	0
3706	4026	0	0	0	0	0
3706	4023	0	0	4	0	0
3706	4022	0	0	0	0	0
3706	3913	0	0	0	0	4
3706	3912	0	4	4	8	0
3706	4024	0	4	0	0	0
3706	4025	0	0	0	0	0
3706	4068	0	0	0	0	0
3706	3917	0	0	0	0	0
3706	3918	0	0	0	0	0
3706	4046	0	0	0	0	0
3705	3915	0	0	0	0	0
3705	3916	0	0	0	0	0
3705	4017	0	4	4	0	0
3705	4021	0	0	0	0	0
3705	3914	0	0	0	0	0
3705	4026	0	0	0	0	0
3705	4023	0	4	0	0	4
3705	4022	0	0	0	0	0
3705	3913	0	0	0	0	0
3705	3912	0	0	0	4	0
3705	4024	0	0	0	0	0
3705	4025	0	0	0	0	0

From	To	ea	am	md	pm	ev
3705	4068	0	4	0	0	0
3705	3917	0	0	0	0	0
3705	3918	0	0	0	0	0
3705	4046	0	0	4	0	0
3704	3915	0	0	0	0	0
3704	3916	0	0	0	0	0
3704	4017	0	0	0	4	0
3704	4021	0	0	4	0	0
3704	3914	0	0	0	0	0
3704	4026	0	0	0	0	0
3704	4023	0	0	0	0	0
3704	4022	0	4	0	0	0
3704	3913	0	0	0	0	0
3704	3912	0	4	8	0	8
3704	4024	0	0	0	0	0
3704	4025	0	0	0	0	0
3704	4068	0	0	0	0	0
3704	3917	0	0	0	0	0
3704	3918	0	0	0	0	0
3704	4046	0	0	0	0	0
3703	3915	0	0	0	0	0
3703	3916	0	0	4	0	0
3703	4017	4	0	8	4	0
3703	4021	0	0	8	4	4
3703	3914	0	0	0	0	0
3703	4026	0	0	0	0	0
3703	4023	0	0	0	0	0
3703	4022	0	0	0	0	0
3703	3913	0	0	0	4	0
3703	3912	0	8	4	8	4
3703	4024	0	0	0	4	0
3703	4025	0	0	0	0	0
3703	4068	0	4	4	0	0
3703	3917	0	0	0	4	0
3703	3918	0	0	0	4	0
3703	4046	0	0	0	4	0
3702	3915	4	0	0	0	0
3702	3916	0	0	0	0	0
3702	4017	0	0	0	0	0
3702	4021	0	4	4	0	0
3702	3914	0	0	0	0	0
3702	4026	0	4	0	0	4
3702	4023	0	0	0	0	0
3702	4022	0	4	0	0	0
3702	3913	0	0	8	0	0
3702	3912	0	12	16	8	8

From	To	ea	am	md	pm	ev
3702	4024	0	0	4	0	0
3702	4025	0	0	0	0	0
3702	4068	0	0	0	0	0
3702	3917	0	0	4	0	0
3702	3918	0	0	0	0	0
3702	4046	4	0	0	0	0
3701	3915	0	0	0	0	0
3701	3916	0	0	0	0	0
3701	4017	0	4	0	0	0
3701	4021	0	0	8	0	0
3701	3914	0	0	0	0	0
3701	4026	0	4	0	0	0
3701	4023	0	4	0	0	0
3701	4022	0	0	0	0	0
3701	3913	0	0	0	4	0
3701	3912	0	8	4	8	0
3701	4024	0	0	0	0	0
3701	4025	0	0	0	0	0
3701	4068	0	0	4	0	0
3701	3917	0	4	0	0	0
3701	3918	0	0	0	0	0
3701	4046	0	0	0	4	0
3700	3915	0	0	0	0	0
3700	3916	0	0	0	0	0
3700	4017	0	0	0	0	0
3700	4021	0	0	0	0	0
3700	3914	0	0	0	0	0
3700	4026	0	0	0	0	0
3700	4023	0	0	0	0	0
3700	4022	0	0	0	0	0
3700	3913	0	0	0	0	0
3700	3912	0	4	0	0	0
3700	4024	0	0	0	0	0
3700	4025	0	0	0	0	0
3700	4068	0	0	0	0	0
3700	3917	0	0	0	0	0
3700	3918	0	0	0	0	0
3700	4046	0	0	0	0	0
3708	3915	0	0	0	0	0
3708	3916	0	0	0	0	0
3708	4017	0	0	4	0	0
3708	4021	0	0	0	0	0
3708	3914	0	0	0	0	0
3708	4026	0	0	0	0	0
3708	4023	0	4	0	0	0
3708	4022	0	0	0	0	0

From	To	ea	am	md	pm	ev
3708	3913	0	0	0	0	0
3708	3912	0	4	0	4	0
3708	4024	0	0	0	4	0
3708	4025	0	0	0	0	0
3708	4068	0	0	0	4	0
3708	3917	0	0	0	0	0
3708	3918	0	0	0	0	0
3708	4046	0	0	0	0	0
3709	3915	0	0	0	0	0
3709	3916	0	0	0	4	0
3709	4017	0	0	0	0	0
3709	4021	0	0	0	0	0
3709	3914	0	0	0	0	0
3709	4026	0	0	0	0	0
3709	4023	0	0	0	0	0
3709	4022	0	0	0	0	0
3709	3913	0	0	4	0	0
3709	3912	0	0	0	8	4
3709	4024	0	0	0	0	0
3709	4025	0	0	0	0	0
3709	4068	0	0	0	0	0
3709	3917	0	0	4	0	0
3709	3918	0	0	0	0	0
3709	4046	0	0	0	0	0
3928	3915	0	0	0	0	0
3928	3916	0	0	0	0	0
3928	4017	0	0	0	0	0
3928	4021	4	4	0	0	4
3928	3914	0	0	0	0	0
3928	4026	0	0	4	0	0
3928	4023	0	0	0	0	0
3928	4022	0	0	0	0	0
3928	3913	0	0	0	4	0
3928	3912	0	4	12	12	4
3928	4024	0	0	0	0	0
3928	4025	0	0	0	0	0
3928	4068	0	0	0	0	0
3928	3917	0	0	0	0	4
3928	3918	0	4	0	0	0
3928	4046	0	0	4	0	0
3929	3915	0	0	0	0	0
3929	3916	0	0	4	0	0
3929	4017	4	0	4	4	0
3929	4021	0	4	4	0	0
3929	3914	0	0	0	0	0
3929	4026	0	0	0	0	0

From	To	ea	am	md	pm	ev
3929	4023	0	0	0	0	0
3929	4022	0	0	0	0	0
3929	3913	0	0	0	0	0
3929	3912	0	4	4	12	4
3929	4024	0	4	0	0	0
3929	4025	0	0	0	0	0
3929	4068	4	0	0	8	0
3929	3917	0	0	0	0	0
3929	3918	0	4	4	4	0
3929	4046	0	0	0	0	0
3940	3915	0	0	0	0	0
3940	3916	4	0	0	0	0
3940	4017	0	4	0	4	0
3940	4021	0	8	4	0	4
3940	3914	0	0	0	0	0
3940	4026	4	4	0	0	0
3940	4023	0	0	0	0	0
3940	4022	0	0	0	0	0
3940	3913	0	0	0	4	0
3940	3912	4	4	16	8	0
3940	4024	0	0	0	0	0
3940	4025	0	0	0	0	4
3940	4068	0	0	4	4	0
3940	3917	0	4	0	0	0
3940	3918	0	0	4	0	0
3940	4046	0	0	4	0	0
3930	3915	0	0	4	0	4
3930	3916	0	8	8	0	4
3930	4017	0	4	4	8	0
3930	4021	0	0	4	4	0
3930	3914	0	0	4	8	0
3930	4026	0	0	0	4	0
3930	4023	4	0	4	4	0
3930	4022	0	0	8	4	0
3930	3913	0	4	0	0	4
3930	3912	0	16	28	32	12
3930	4024	0	0	4	0	0
3930	4025	0	0	0	0	0
3930	4068	4	0	0	0	4
3930	3917	0	0	4	0	0
3930	3918	0	4	0	0	0
3930	4046	0	0	4	0	0
3939	3915	0	0	0	0	0
3939	3916	0	0	0	4	0
3939	4017	0	0	0	0	0
3939	4021	0	8	4	0	0

From	To	ea	am	md	pm	ev
3939	3914	0	0	0	0	0
3939	4026	0	0	4	0	0
3939	4023	0	0	0	4	0
3939	4022	0	4	0	0	0
3939	3913	0	0	0	0	0
3939	3912	0	4	12	8	0
3939	4024	0	0	0	0	0
3939	4025	0	0	0	0	0
3939	4068	0	0	0	0	0
3939	3917	0	0	0	4	0
3939	3918	0	4	0	0	0
3939	4046	4	0	4	0	0
3933	3915	0	0	0	4	0
3933	3916	0	0	4	0	0
3933	4017	0	4	0	8	0
3933	4021	0	20	4	8	4
3933	3914	0	0	0	0	0
3933	4026	0	0	0	0	0
3933	4023	0	0	0	0	0
3933	4022	0	0	0	0	0
3933	3913	0	0	4	4	0
3933	3912	0	0	28	8	8
3933	4024	0	4	0	4	0
3933	4025	0	0	0	0	0
3933	4068	0	4	4	8	0
3933	3917	0	0	0	0	0
3933	3918	0	8	4	0	0
3933	4046	0	0	8	0	0
3931	3915	0	0	0	0	0
3931	3916	4	0	8	4	0
3931	4017	0	0	4	4	4
3931	4021	0	0	8	8	4
3931	3914	0	0	4	0	0
3931	4026	0	4	4	0	0
3931	4023	0	0	0	0	0
3931	4022	0	4	0	0	0
3931	3913	0	0	4	12	12
3931	3912	0	0	28	60	32
3931	4024	0	0	0	0	0
3931	4025	0	0	0	0	0
3931	4068	0	0	0	0	0
3931	3917	0	4	4	8	4
3931	3918	0	0	4	0	0
3931	4046	0	0	4	0	0
3932	3915	0	0	0	0	0
3932	3916	0	0	0	0	0

From	To	ea	am	md	pm	ev
3932	4017	0	0	0	0	0
3932	4021	0	0	4	0	8
3932	3914	0	0	4	4	0
3932	4026	0	4	0	4	0
3932	4023	0	0	0	0	4
3932	4022	0	4	4	4	0
3932	3913	0	0	0	0	4
3932	3912	0	4	20	12	4
3932	4024	0	0	0	0	0
3932	4025	0	0	0	0	0
3932	4068	0	0	0	0	0
3932	3917	0	0	0	0	0
3932	3918	0	0	0	8	0
3932	4046	0	0	0	0	0
3934	3915	0	0	0	0	0
3934	3916	0	0	0	0	0
3934	4017	0	0	0	0	0
3934	4021	0	0	4	0	0
3934	3914	0	0	0	0	0
3934	4026	0	0	0	0	0
3934	4023	0	0	0	0	0
3934	4022	0	0	0	0	0
3934	3913	0	0	0	0	0
3934	3912	0	0	0	0	0
3934	4024	0	0	0	0	0
3934	4025	0	0	0	0	0
3934	4068	0	0	0	4	4
3934	3917	0	0	0	0	0
3934	3918	0	0	0	0	0
3934	4046	0	0	0	0	0
3938	3915	0	0	4	0	4
3938	3916	0	4	0	0	0
3938	4017	0	0	8	0	0
3938	4021	0	0	0	0	0
3938	3914	0	0	0	0	0
3938	4026	0	0	0	0	0
3938	4023	0	0	4	0	0
3938	4022	0	0	8	0	0
3938	3913	0	0	0	4	0
3938	3912	0	16	16	36	8
3938	4024	0	0	4	0	4
3938	4025	0	0	0	0	0
3938	4068	0	4	0	0	0
3938	3917	0	0	4	4	0
3938	3918	0	4	0	0	0
3938	4046	0	0	0	0	0

From	To	ea	am	md	pm	ev
3935	3915	0	0	0	0	0
3935	3916	0	4	0	0	0
3935	4017	0	0	0	0	0
3935	4021	0	0	0	0	0
3935	3914	0	0	0	0	0
3935	4026	0	0	0	0	0
3935	4023	0	0	4	0	4
3935	4022	0	0	0	0	0
3935	3913	0	0	0	0	0
3935	3912	4	0	8	8	4
3935	4024	0	0	0	0	0
3935	4025	0	0	0	0	0
3935	4068	0	0	8	0	0
3935	3917	0	0	0	0	0
3935	3918	0	4	4	0	0
3935	4046	0	8	0	0	0
3915	3654	0	0	0	0	0
3916	3654	0	0	0	0	0
4017	3654	0	0	0	0	0
4021	3654	0	8	0	8	0
3914	3654	0	0	4	0	0
4026	3654	0	0	4	4	0
4023	3654	0	0	0	0	0
4022	3654	0	0	0	0	0
3913	3654	0	0	0	0	0
3912	3654	0	4	20	4	0
4024	3654	0	0	0	0	0
4025	3654	0	0	0	0	0
4068	3654	0	0	4	0	0
3917	3654	0	0	0	0	0
3918	3654	0	0	0	0	0
4046	3654	0	4	4	0	0
3915	3710	0	0	0	0	0
3916	3710	0	0	0	0	0
4017	3710	0	0	0	4	0
4021	3710	0	0	0	0	0
3914	3710	0	0	0	0	0
4026	3710	0	0	0	0	0
4023	3710	0	0	0	0	0
4022	3710	0	0	0	0	0
3913	3710	0	0	0	0	0
3912	3710	0	0	0	0	0
4024	3710	0	0	0	0	0
4025	3710	0	0	0	0	0
4068	3710	0	0	0	4	0
3917	3710	0	0	0	0	0

From	To	ea	am	md	pm	ev
3918	3710	0	0	0	0	0
4046	3710	0	0	4	0	0
3915	3711	0	0	0	0	0
3916	3711	0	0	0	0	0
4017	3711	0	4	0	0	0
4021	3711	0	8	0	0	0
3914	3711	0	0	0	0	0
4026	3711	0	4	0	0	0
4023	3711	0	0	0	0	0
4022	3711	0	0	0	0	0
3913	3711	0	4	0	0	0
3912	3711	0	0	12	0	0
4024	3711	0	0	0	0	0
4025	3711	0	0	0	0	0
4068	3711	0	0	0	0	0
3917	3711	0	0	0	0	0
3918	3711	0	0	0	0	0
4046	3711	0	4	0	0	0
3915	3707	0	0	0	0	0
3916	3707	0	0	0	0	0
4017	3707	0	0	0	4	0
4021	3707	0	0	0	4	0
3914	3707	0	0	0	0	0
4026	3707	0	0	0	0	0
4023	3707	0	0	0	0	0
4022	3707	0	0	0	0	0
3913	3707	0	0	0	0	0
3912	3707	0	0	0	8	0
4024	3707	0	0	0	0	0
4025	3707	0	0	0	0	0
4068	3707	0	0	0	0	0
3917	3707	0	0	0	0	0
3918	3707	0	0	0	0	0
4046	3707	0	0	0	0	0
3915	3706	0	0	0	0	0
3916	3706	0	0	0	0	0
4017	3706	0	8	0	0	0
4021	3706	0	4	0	0	4
3914	3706	0	0	0	0	0
4026	3706	0	0	0	0	0
4023	3706	0	4	0	0	0
4022	3706	0	0	0	0	0
3913	3706	0	0	0	4	0
3912	3706	0	0	4	12	0
4024	3706	0	4	0	0	0
4025	3706	0	0	0	0	0

From	To	ea	am	md	pm	ev
4068	3706	0	0	0	0	0
3917	3706	0	0	0	0	0
3918	3706	0	0	0	0	0
4046	3706	0	0	0	0	0
3915	3705	0	0	0	0	0
3916	3705	0	0	0	0	0
4017	3705	0	0	0	0	0
4021	3705	0	0	0	4	0
3914	3705	0	0	0	0	0
4026	3705	0	0	0	0	0
4023	3705	4	4	0	0	0
4022	3705	0	0	0	0	0
3913	3705	0	0	0	4	0
3912	3705	0	0	4	0	0
4024	3705	0	0	0	0	0
4025	3705	0	0	0	0	0
4068	3705	0	0	0	4	0
3917	3705	0	0	4	0	0
3918	3705	0	0	0	0	0
4046	3705	0	0	0	0	0
3915	3704	0	0	0	0	0
3916	3704	0	0	0	0	0
4017	3704	0	0	0	0	0
4021	3704	0	0	0	4	0
3914	3704	0	0	0	0	0
4026	3704	0	0	0	0	0
4023	3704	0	0	0	0	0
4022	3704	0	0	0	0	0
3913	3704	0	4	0	0	0
3912	3704	0	4	20	0	0
4024	3704	0	0	0	0	0
4025	3704	0	0	0	0	0
4068	3704	0	0	0	0	0
3917	3704	0	0	0	0	0
3918	3704	0	0	0	0	0
4046	3704	0	0	0	0	0
3915	3703	0	0	0	0	4
3916	3703	0	0	0	0	0
4017	3703	0	0	0	0	0
4021	3703	4	0	0	4	0
3914	3703	0	0	4	0	0
4026	3703	0	4	4	0	0
4023	3703	0	0	0	0	0
4022	3703	0	0	0	0	0
3913	3703	4	8	0	4	0
3912	3703	0	4	8	16	8

From	To	ea	am	md	pm	ev
4024	3703	0	0	0	0	0
4025	3703	0	0	0	0	0
4068	3703	0	4	0	4	0
3917	3703	0	0	0	0	0
3918	3703	0	0	0	4	0
4046	3703	0	0	0	0	4
3915	3702	0	0	0	4	0
3916	3702	0	0	0	0	0
4017	3702	0	0	0	4	4
4021	3702	4	0	4	4	0
3914	3702	0	0	0	0	0
4026	3702	0	0	0	4	8
4023	3702	0	0	0	0	0
4022	3702	0	0	0	4	0
3913	3702	0	4	0	0	0
3912	3702	4	4	8	12	4
4024	3702	0	0	0	0	0
4025	3702	0	0	0	0	0
4068	3702	0	4	0	0	4
3917	3702	0	0	4	0	0
3918	3702	0	0	0	0	0
4046	3702	0	0	0	4	0
3915	3701	0	0	0	0	0
3916	3701	0	0	0	0	0
4017	3701	0	0	0	4	0
4021	3701	0	0	4	4	4
3914	3701	0	0	0	0	0
4026	3701	0	0	0	0	0
4023	3701	0	0	0	4	0
4022	3701	0	0	0	0	0
3913	3701	0	4	0	0	0
3912	3701	4	0	16	4	0
4024	3701	0	0	0	0	0
4025	3701	0	0	0	0	0
4068	3701	0	0	0	0	0
3917	3701	0	0	0	0	0
3918	3701	0	0	0	0	0
4046	3701	0	0	0	0	0
3915	3700	0	0	0	0	0
3916	3700	0	0	0	0	0
4017	3700	0	0	0	0	0
4021	3700	0	0	0	0	0
3914	3700	0	0	0	0	0
4026	3700	0	0	0	0	0
4023	3700	0	0	0	0	0
4022	3700	0	0	0	0	0

From	To	ea	am	md	pm	ev
3913	3700	0	0	0	0	0
3912	3700	0	0	4	0	0
4024	3700	0	0	0	0	0
4025	3700	0	0	0	0	0
4068	3700	0	0	0	0	0
3917	3700	0	0	0	0	0
3918	3700	0	0	0	0	0
4046	3700	0	0	0	0	0
3915	3708	0	0	0	0	0
3916	3708	0	0	0	0	0
4017	3708	0	0	0	0	0
4021	3708	0	0	0	4	0
3914	3708	0	0	0	0	0
4026	3708	0	0	0	0	0
4023	3708	0	0	0	0	0
4022	3708	0	0	0	0	0
3913	3708	0	0	0	0	0
3912	3708	0	4	0	16	4
4024	3708	0	0	4	0	0
4025	3708	0	0	0	0	0
4068	3708	0	0	0	0	0
3917	3708	0	0	0	0	0
3918	3708	0	0	0	0	0
4046	3708	0	0	0	4	0
3915	3709	0	0	0	0	0
3916	3709	0	4	0	0	0
4017	3709	0	0	0	0	0
4021	3709	0	0	0	0	0
3914	3709	0	0	0	0	0
4026	3709	0	0	0	0	0
4023	3709	0	0	0	0	0
4022	3709	0	0	0	0	0
3913	3709	0	4	0	0	0
3912	3709	0	0	4	0	4
4024	3709	0	0	0	0	0
4025	3709	0	0	0	0	0
4068	3709	0	0	0	4	0
3917	3709	0	4	0	0	0
3918	3709	0	0	0	0	0
4046	3709	0	0	0	0	0
3915	3928	0	0	0	0	0
3916	3928	0	0	0	0	0
4017	3928	0	0	0	0	0
4021	3928	0	4	4	0	0
3914	3928	0	0	0	0	0
4026	3928	0	0	0	0	0

From	To	ea	am	md	pm	ev
4023	3928	0	4	0	0	0
4022	3928	0	0	0	0	0
3913	3928	0	0	0	0	0
3912	3928	4	4	8	8	12
4024	3928	0	0	0	0	0
4025	3928	0	0	4	0	0
4068	3928	0	0	0	0	0
3917	3928	0	0	0	0	0
3918	3928	0	4	0	0	0
4046	3928	0	4	4	0	0
3915	3929	0	0	0	0	0
3916	3929	0	0	8	0	0
4017	3929	0	4	0	4	4
4021	3929	0	4	8	0	0
3914	3929	0	0	0	0	0
4026	3929	0	0	0	0	0
4023	3929	0	0	0	0	4
4022	3929	0	0	0	0	0
3913	3929	0	0	4	0	0
3912	3929	0	0	4	12	4
4024	3929	0	0	0	0	0
4025	3929	0	0	0	0	0
4068	3929	4	0	0	0	0
3917	3929	0	0	0	0	0
3918	3929	0	4	0	0	0
4046	3929	0	0	0	4	0
3915	3940	0	0	0	0	0
3916	3940	0	0	0	4	0
4017	3940	0	0	0	8	4
4021	3940	0	0	0	0	4
3914	3940	0	0	0	0	0
4026	3940	0	0	0	4	0
4023	3940	0	0	0	0	0
4022	3940	0	0	0	4	0
3913	3940	0	0	0	0	0
3912	3940	0	4	16	16	8
4024	3940	0	0	0	0	0
4025	3940	0	0	0	0	0
4068	3940	0	0	4	0	0
3917	3940	0	4	0	4	0
3918	3940	4	0	4	0	0
4046	3940	0	0	0	0	0
3915	3930	0	0	0	0	0
3916	3930	0	4	0	0	0
4017	3930	0	4	4	8	0
4021	3930	0	4	0	4	4

From	To	ea	am	md	pm	ev
3914	3930	0	4	0	0	0
4026	3930	0	0	0	4	0
4023	3930	4	0	0	4	0
4022	3930	0	0	0	8	4
3913	3930	0	4	0	8	0
3912	3930	8	8	36	32	28
4024	3930	0	0	8	0	0
4025	3930	0	0	0	0	0
4068	3930	0	4	8	0	4
3917	3930	0	0	4	0	0
3918	3930	0	0	0	8	0
4046	3930	0	0	0	0	0
3915	3939	0	0	0	0	0
3916	3939	0	4	0	0	0
4017	3939	0	0	0	0	0
4021	3939	0	0	4	4	4
3914	3939	0	0	0	0	0
4026	3939	4	4	0	4	0
4023	3939	0	0	0	4	0
4022	3939	0	0	0	0	0
3913	3939	0	0	0	0	4
3912	3939	4	0	16	24	4
4024	3939	0	0	0	0	0
4025	3939	0	0	0	0	0
4068	3939	0	0	0	0	0
3917	3939	0	0	0	0	0
3918	3939	0	0	0	4	0
4046	3939	0	0	4	0	0
3915	3933	0	0	4	0	0
3916	3933	0	0	4	0	0
4017	3933	0	4	4	4	0
4021	3933	4	0	12	16	0
3914	3933	0	0	0	0	0
4026	3933	0	4	4	0	0
4023	3933	0	0	0	0	0
4022	3933	0	0	0	8	0
3913	3933	0	4	0	4	0
3912	3933	4	4	36	28	8
4024	3933	0	0	8	0	0
4025	3933	0	0	0	0	0
4068	3933	0	0	0	4	0
3917	3933	0	0	0	0	0
3918	3933	0	0	8	0	0
4046	3933	0	0	0	4	4
3915	3931	0	0	0	0	0
3916	3931	0	4	4	0	0

From	To	ea	am	md	pm	ev
4017	3931	4	8	4	0	0
4021	3931	0	4	4	12	0
3914	3931	0	4	0	0	0
4026	3931	0	4	4	0	0
4023	3931	0	0	4	0	0
4022	3931	0	0	0	0	0
3913	3931	0	0	4	4	0
3912	3931	0	12	36	16	12
4024	3931	0	0	0	0	0
4025	3931	0	0	0	0	0
4068	3931	0	0	0	0	0
3917	3931	0	0	4	0	0
3918	3931	0	0	0	4	0
4046	3931	0	0	0	0	0
3915	3932	0	0	4	0	0
3916	3932	0	0	0	0	0
4017	3932	0	0	0	0	0
4021	3932	0	0	0	8	0
3914	3932	4	0	0	0	0
4026	3932	4	4	0	4	4
4023	3932	4	0	0	0	0
4022	3932	0	0	0	4	0
3913	3932	0	8	4	4	0
3912	3932	0	0	16	16	4
4024	3932	0	4	0	0	0
4025	3932	0	0	0	0	0
4068	3932	0	0	0	0	0
3917	3932	0	8	0	0	0
3918	3932	0	0	0	4	0
4046	3932	0	0	0	4	0
3915	3934	0	0	0	0	0
3916	3934	0	0	0	0	0
4017	3934	0	0	4	0	0
4021	3934	0	0	0	4	0
3914	3934	0	0	0	0	0
4026	3934	0	0	0	0	0
4023	3934	0	0	0	0	0
4022	3934	0	0	0	0	0
3913	3934	0	0	0	0	0
3912	3934	0	0	0	4	4
4024	3934	0	0	0	0	0
4025	3934	0	0	0	0	0
4068	3934	0	0	0	0	0
3917	3934	0	0	0	0	0
3918	3934	0	0	0	0	0
4046	3934	0	0	0	0	0

From	To	ea	am	md	pm	ev
3915	3938	0	0	0	0	4
3916	3938	0	0	0	4	0
4017	3938	0	0	0	4	0
4021	3938	0	0	0	0	12
3914	3938	0	0	0	0	0
4026	3938	0	4	0	0	0
4023	3938	0	0	4	4	0
4022	3938	0	0	4	0	0
3913	3938	0	0	0	4	0
3912	3938	4	8	24	56	12
4024	3938	0	4	4	0	0
4025	3938	0	0	0	0	0
4068	3938	4	0	4	0	0
3917	3938	0	4	0	4	0
3918	3938	4	0	0	0	0
4046	3938	0	0	0	0	0
3915	3935	0	0	0	0	0
3916	3935	0	0	0	0	4
4017	3935	0	0	0	0	0
4021	3935	0	0	0	0	0
3914	3935	0	0	0	0	0
4026	3935	0	0	0	4	0
4023	3935	0	0	4	0	4
4022	3935	0	0	4	0	0
3913	3935	0	0	0	4	0
3912	3935	12	4	8	4	8
4024	3935	0	0	0	0	0
4025	3935	0	0	4	0	0
4068	3935	0	0	4	4	0
3917	3935	0	0	0	0	0
3918	3935	0	4	4	0	0
4046	3935	0	0	0	0	0

Trips which will use Trail	**2940**
Total Trips	**30868**
Percentage of Diversion	**9.52%**

Appendix L –Mid-block Crossing Analysis

WORKSHEET 2: PEAK-HOUR, EXCEEDS 35 MPH (55 KM/H)

Analyst and Site Information			SR#	
Analyst:	**Moe Lavasani**	Major Street:	**W Flagler Street**	
Analysis Date:	**10/22/2018**	Minor Street	**Ludlam Trail**	
Data Collection Date:	**9/20/2018**	Peak Hour:	**PM**	

Step 1: Select worksheet (speed reflects posted, statutory or 85th percentile speed on the major street):
a) Worksheet 1 - 35 mph (55 km/h) or less
b) Worksheet 2 - exceeds 35 mph (55 km/h), communities with less than 10,000, or where major transit stop exists

Step 2: Does the crossing meet minimum pedestrian volumes to be considered for a TCD type of treatment?

Pedestrian Volume during peak-hour (ped/h), Vp	*2a*	**191**
If *2a* ≥ 14 ped/h, then go to Step 3.		
If *2a* < 14 ped/h, then consider median refuge island, curb extension, traffic calming, etc. as feasible.		
Outcome 1	**Go to step 3**	

Step 3: Does the crossing meet the pedestrian volume warrant for a traffic signal?

Major Road Volume, total of both approaches during peak hour (veh/h), Vmaj-s	*3a*	**4432**
Minimum signal warrant volume for peak hour (use *3a* for Vmaj-s), SC SC = (0.00035 Vmaj-s^2 - 0.80083 Vmaj-s + 529.197)/0.75 OR (0.00035 *3a*^{2} *- 0.80083 3a + 529.197)/0.75*	*3b*	**5140**
If *3b* < *93,* then enter 93, if *3b* ≥ *93* then enter *3b*	*3c*	**5140**
If 15th percentile crossing speed of pedestrians is less than 3.5 ft/s (1.1 m/s), then reduce *3c* by up to 50 percent; otherwise enter *3c.*	*3d*	**5140**
If *2a* ≥ 3d, then the warrant has been met and the traffic signal should be considered if not within 300 ft (91 m) of another traffic signal. Otherwise, the warrant has not been met. Goto step 4.		
Outcome 2	**Signal Warrant has not being met. --> Go to step 4**	

Step 4: Estimate pedestrian delay.

Pedestrian Crossing Distance, curb to curb (ft), L	*4a*	**55**
Pedestrian Walking Speed (ft/s), Sp	*4b*	**4.0**
Pedestrian Start-up Time and End Clearance Time (s), ts	*4c*	**3**
Critical gap required for crossing pedestrian (s), tc = (L/Sp) + ts OR [(*4a/4b*) + *4c*)]	*4d*	**17**
Major Road Volume, total both approaches or approach being crossed if median refuge island is present during peak hour (veh/h), Vmaj-d	*4e*	**2319**
Major road flow rate (veh/s), v = (Vmaj-d/0.7) / 3600 OR (4e/0.7 / 3600)	*4f*	**0.920**
Average pedestrian delay (s/person), dp=(e$^{v\ tc}$ - v tc -1)/ v OR ((e$^{4f\ x\ 4d}$ - 4f*4d-1)/4f)	*4g*	**5374132**
Total pedestrian delay (h), **Dp** = (dp x Vp) / 3600 OR ((4g*2a)/3600) (this is estimated delay for all pedestrians crossing the major roadway without a crossing treatment - assumes 0% compliance). This calculated value can be replaced with the actual total pedestrian delay measured at the site.	*4h*	**285127.6**

Step 5: Select treatment based upon total pedestrian delay and expected motorist compliance.

Expected motorist compliance at pedestrian crossing, Comp = High(1) or Low(2)	*5a*	**1**

Total Pedestrian Delay, Dp (from *4h*) and Motorist Compliance, Comp (from *5a*)	**Treatment Category** (see Description of sample Treatments for examples)
Dp ≥ 21.3 h (Comp = high or low) OR 5.3 h ≤ Dp < 21.3 h and Comp = low	**RED**
Dp < 5.3 h (Comp = high or low) OR 5.3 h ≤ Dp < 21.3 h and Comp = high	~~ACTIVE / ENHANCED Not Feasible~~
If Outcome 1 or 2 are not satisfied	~~TREATMENT CATEGORY~~

WORKSHEET 1: PEAK-HOUR, 35 MPH (55 KM/H) OR LESS

Analyst and Site Information			SR#	
Analyst:	**Moe Lavasani**	Major Street:	**SW 4th Street**	
Analysis Date:	**10/22/2018**	Minor Street	**Ludlam Trail**	
Data Collection Date:	**9/20/2018**	Peak Hour:	**PM**	

Step 1: Select worksheet (speed reflects posted, statutory or 85th percentile speed on the major street):
a) Worksheet 1 - 35 mph (55 km/h) or less
b) Worksheet 2 - exceeds 35 mph (55 km/h), communities with less than 10,000, or where major transit stop exists

Step 2: Does the crossing meet minimum pedestrian volumes to be considered for a TCD type of treatment?

Pedestrian Volume during peak-hour (ped/h), Vp	*2a*	**191**
If *2a* ≥ 20 ped/h, then go to Step 3.		
If *2a* < 20 ped/h, then consider median refuge island, curb extension, traffic calming, etc. as feasible.		
Outcome 1	**Go to step 3**	

Step 3: Does the crossing meet the pedestrian volume warrant for a traffic signal?

Major Road Volume, total of both approaches during peak hour (veh/h), Vmaj-s	*3a*	**1171**
Minimum signal warrant volume for peak hour (use *3a* for Vmaj-s), SC SC = (0.00021 Vmaj-s^2 - 0.74072 Vmaj-s + 734.125)/0.75 OR (0.00021 *3a*^{2} *- 0.74072 3a +734.125)/0.75*	*3b*	**206**
If *3b* < *133,* then enter 133, if *3b* ≥ *133* then enter *3b*	*3c*	**206**
If 15th percentile crossing speed of pedestrians is less than 3.5 ft/s (1.1 m/s), then reduce *3c* by up to 50 percent; otherwise enter *3c.*	*3d*	**206**
If *2a* ≥ 3d, then the warrant has been met and the traffic signal should be considered if not within 300 ft (91 m) of another traffic signal. Otherwise, the warrant has not been met. Goto step 4.		
Outcome 2	**Signal Warrant has not being met. --> Go to step 4**	

Step 4: Estimate pedestrian delay.

Pedestrian Crossing Distance, curb to curb (ft), L	*4a*	**23**
Pedestrian Walking Speed (ft/s), Sp	*4b*	**4.0**
Pedestrian Start-up Time and End Clearance Time (s), ts	*4c*	**3**
Critical gap required for crossing pedestrian (s), tc = (L/Sp) + ts OR [(*4a/4b*) + *4c*)]	*4d*	**9**
Major Road Volume, total both approaches or approach being crossed if median refuge island is present during peak hour (veh/h), Vmaj-d	*4e*	**1171**
Major road flow rate (veh/s), v = Vmaj-d / 3600 OR (4e / 3600)	*4f*	**0.325**
Average pedestrian delay (s/person), dp=($e^{v\ tc}$ - v tc -1)/ v OR (($e^{4f \times 4d}$ - 4f*4d-1)/4f)	*4g*	**41**
Total pedestrian delay (h), **Dp** = (dp x Vp) / 3600 OR ((4g*2a)/3600) (this is estimated delay for all pedestrians crossing the major roadway without a crossing treatment - assumes 0% compliance). This calculated value can be replaced with the actual total pedestrian delay measured at the site.	*4h*	**2.2**

Step 5: Select treatment based upon total pedestrian delay and expected motorist compliance.

Expected motorist compliance at pedestrian crossing, Comp = High(1) or Low(2)	*5a*	**1**

Total Pedestrian Delay, Dp (from *4h*) and Motorist Compliance, Comp (from *5a*)	**Treatment Category** (see Description of sample Treatments for examples)
Dp ≥ 21.3 h (Comp = high or low) OR 5.3 h ≤ Dp < 21.3 h and Comp = low	~~RED Not Feasible~~
1.3 h ≤ Dp < 5.3 h (Comp = high or low) OR 5.3 h ≤ Dp < 21.3 h and Comp = high	**ACTIVE / ENHANCED**
Dp < 1.3 h (Comp = high or low)	~~CROSSWALK Not Feasible~~
If Outcome 1 or 2 are not satisfied	~~TREATMENT CATEGORY~~

WORKSHEET 2: PEAK-HOUR, EXCEEDS 35 MPH (55 KM/H)

Analyst and Site Information			SR#	
Analyst:	**Moe Lavasani**	Major Street:	**SW 8th Street**	
Analysis Date:	**10/22/2018**	Minor Street	**Ludlam Trail**	
Data Collection Date:	**9/20/2018**	Peak Hour:	**PM**	

Step 1: Select worksheet (speed reflects posted, statutory or 85th percentile speed on the major street):
a) Worksheet 1 - 35 mph (55 km/h) or less
b) Worksheet 2 - exceeds 35 mph (55 km/h), communities with less than 10,000, or where major transit stop exists

Step 2: Does the crossing meet minimum pedestrian volumes to be considered for a TCD type of treatment?

Pedestrian Volume during peak-hour (ped/h), Vp	*2a*	**191**
If *2a* ≥ 14 ped/h, then go to Step 3.		
If *2a* < 14 ped/h, then consider median refuge island, curb extension, traffic calming, etc. as feasible.		
Outcome 1	**Go to step 3**	

Step 3: Does the crossing meet the pedestrian volume warrant for a traffic signal?

Major Road Volume, total of both approaches during peak hour (veh/h), Vmaj-s	*3a*	**4023**
Minimum signal warrant volume for peak hour (use *3a* for Vmaj-s), SC SC = (0.00035 Vmaj-s^2 - 0.80083 Vmaj-s + 529.197)/0.75 OR (0.00035 *3a*^{2} *- 0.80083 3a + 529.197)/0.75*	*3b*	**3963**
If *3b* < *93,* then enter 93, if *3b* ≥ *93* then enter *3b*	*3c*	**3963**
If 15th percentile crossing speed of pedestrians is less than 3.5 ft/s (1.1 m/s), then reduce *3c* by up to 50 percent; otherwise enter *3c.*	*3d*	**3963**
If *2a* ≥ 3d, then the warrant has been met and the traffic signal should be considered if not within 300 ft (91 m) of another traffic signal. Otherwise, the warrant has not been met. Goto step 4.		
Outcome 2	**Signal Warrant has not being met. --> Go to step 4**	

Step 4: Estimate pedestrian delay.

Pedestrian Crossing Distance, curb to curb (ft), L	*4a*	**55**
Pedestrian Walking Speed (ft/s), Sp	*4b*	**4.0**
Pedestrian Start-up Time and End Clearance Time (s), ts	*4c*	**3**
Critical gap required for crossing pedestrian (s), tc = (L/Sp) + ts OR [(*4a/4b*) + *4c*)]	*4d*	**17**
Major Road Volume, total both approaches or approach being crossed if median refuge island is present during peak hour (veh/h), Vmaj-d	*4e*	**4023**
Major road flow rate (veh/s), v = (Vmaj-d/0.7) / 3600 OR (4e/0.7 / 3600)	*4f*	**1.596**
Average pedestrian delay (s/person), dp=($e^{v\ tc}$ - v tc -1)/ v OR (($e^{4f \times 4d}$ - 4f*4d-1)/4f)	*4g*	**257017388714**
Total pedestrian delay (h), **Dp** = (dp x Vp) / 3600 OR ((4g*2a)/3600) (this is estimated delay for all pedestrians crossing the major roadway without a crossing treatment - assumes 0% compliance). This calculated value can be replaced with the actual total pedestrian delay measured at the site.	*4h*	**13636200345.6**

Step 5: Select treatment based upon total pedestrian delay and expected motorist compliance.

Expected motorist compliance at pedestrian crossing, Comp = High(1) or Low(2)	*5a*	**1**

Total Pedestrian Delay, Dp (from *4h*) and Motorist Compliance, Comp (from *5a*)	**Treatment Category** (see Description of sample Treatments for examples)
Dp ≥ 21.3 h (Comp = high or low) OR 5.3 h ≤ Dp < 21.3 h and Comp = low	**RED**
Dp < 5.3 h (Comp = high or low) OR 5.3 h ≤ Dp < 21.3 h and Comp = high	~~ACTIVE / ENHANCED Not Feasible~~
If Outcome 1 or 2 are not satisfied	~~TREATMENT CATEGORY~~

WORKSHEET 1: PEAK-HOUR, 35 MPH (55 KM/H) OR LESS

Analyst and Site Information			SR#	
Analyst:	**Moe Lavasani**	Major Street:	**SW 12th Street**	
Analysis Date:	**10/22/2018**	Minor Street	**Ludlam Trail**	
Data Collection Date:	**9/20/2018**	Peak Hour:	**PM**	

Step 1: Select worksheet (speed reflects posted, statutory or 85th percentile speed on the major street):
a) Worksheet 1 - 35 mph (55 km/h) or less
b) Worksheet 2 - exceeds 35 mph (55 km/h), communities with less than 10,000, or where major transit stop exists

Step 2: Does the crossing meet minimum pedestrian volumes to be considered for a TCD type of treatment?

Pedestrian Volume during peak-hour (ped/h), Vp	*2a*	**191**
If *2a* ≥ 20 ped/h, then go to Step 3.		
If *2a* < 20 ped/h, then consider median refuge island, curb extension, traffic calming, etc. as feasible.		
Outcome 1	**Go to step 3**	

Step 3: Does the crossing meet the pedestrian volume warrant for a traffic signal?

Major Road Volume, total of both approaches during peak hour (veh/h), Vmaj-s	*3a*	**550**
Minimum signal warrant volume for peak hour (use *3a* for Vmaj-s), SC SC = (0.00021 Vmaj-s^2 - 0.74072 Vmaj-s + 734.125)/0.75 OR (0.00021 *3a*^{2} *- 0.74072 3a +734.125)/0.75*	*3b*	**520**
If *3b* < *133,* then enter 133, if *3b* ≥ *133* then enter *3b*	*3c*	**520**
If 15th percentile crossing speed of pedestrians is less than 3.5 ft/s (1.1 m/s), then reduce *3c* by up to 50 percent; otherwise enter *3c.*	*3d*	**520**
If *2a* ≥ 3d, then the warrant has been met and the traffic signal should be considered if not within 300 ft (91 m) of another traffic signal. Otherwise, the warrant has not been met. Goto step 4.		
Outcome 2	**Signal Warrant has not being met. --> Go to step 4**	

Step 4: Estimate pedestrian delay.

Pedestrian Crossing Distance, curb to curb (ft), L	*4a*	**25**
Pedestrian Walking Speed (ft/s), Sp	*4b*	**4.0**
Pedestrian Start-up Time and End Clearance Time (s), ts	*4c*	**3**
Critical gap required for crossing pedestrian (s), tc = (L/Sp) + ts OR [(*4a/4b*) + *4c*)]	*4d*	**9**
Major Road Volume, total both approaches or approach being crossed if median refuge island is present during peak hour (veh/h), Vmaj-d	*4e*	**550**
Major road flow rate (veh/s), v = Vmaj-d / 3600 OR (4e / 3600)	*4f*	**0.153**
Average pedestrian delay (s/person), dp=($e^{v\ tc}$ - v tc -1)/ v OR (($e^{4f\ x\ 4d}$ - 4f*4d-1)/4f)	*4g*	**11**
Total pedestrian delay (h), **Dp** = (dp x Vp) / 3600 OR ((4g*2a)/3600) (this is estimated delay for all pedestrians crossing the major roadway without a crossing treatment - assumes 0% compliance). This calculated value can be replaced with the actual total pedestrian delay measured at the site.	*4h*	**0.6**

Step 5: Select treatment based upon total pedestrian delay and expected motorist compliance.

Expected motorist compliance at pedestrian crossing, Comp = High(1) or Low(2)	*5a*	**1**

Total Pedestrian Delay, Dp (from *4h*) and Motorist Compliance, Comp (from *5a*)	**Treatment Category** (see Description of sample Treatments for examples)
Dp ≥ 21.3 h (Comp = high or low) OR 5.3 h ≤ Dp < 21.3 h and Comp = low	~~RED Not Feasible~~
1.3 h ≤ Dp < 5.3 h (Comp = high or low) OR 5.3 h ≤ Dp < 21.3 h and Comp = high	~~ACTIVE / ENHANCED Not Feasible~~
Dp < 1.3 h (Comp = high or low)	**CROSSWALK**
If Outcome 1 or 2 are not satisfied	~~TREATMENT CATEGORY~~

WORKSHEET 1: PEAK-HOUR, 35 MPH (55 KM/H) OR LESS

Analyst and Site Information			SR#	
Analyst:	**Moe Lavasani**	Major Street:	**SW 16th Street**	
Analysis Date:	**10/22/2018**	Minor Street	**Ludlam Trail**	
Data Collection Date:	**9/20/2018**	Peak Hour:	**PM**	

Step 1: Select worksheet (speed reflects posted, statutory or 85th percentile speed on the major street):
a) Worksheet 1 - 35 mph (55 km/h) or less
b) Worksheet 2 - exceeds 35 mph (55 km/h), communities with less than 10,000, or where major transit stop exists

Step 2: Does the crossing meet minimum pedestrian volumes to be considered for a TCD type of treatment?

Pedestrian Volume during peak-hour (ped/h), Vp	*2a*	**191**
If *2a* ≥ 20 ped/h, then go to Step 3.		
If *2a* < 20 ped/h, then consider median refuge island, curb extension, traffic calming, etc. as feasible.		
Outcome 1	**Go to step 3**	

Step 3: Does the crossing meet the pedestrian volume warrant for a traffic signal?

Major Road Volume, total of both approaches during peak hour (veh/h), Vmaj-s	*3a*	**988**
Minimum signal warrant volume for peak hour (use *3a* for Vmaj-s), SC SC = (0.00021 Vmaj-s^2 - 0.74072 Vmaj-s + 734.125)/0.75 OR (0.00021 *3a*^{2} *- 0.74072 3a +734.125)/0.75*	*3b*	**276**
If *3b* < *133,* then enter 133, if *3b* ≥ *133* then enter *3b*	*3c*	**276**
If 15th percentile crossing speed of pedestrians is less than 3.5 ft/s (1.1 m/s), then reduce *3c* by up to 50 percent; otherwise enter *3c.*	*3d*	**276**
If *2a* ≥ 3d, then the warrant has been met and the traffic signal should be considered if not within 300 ft (91 m) of another traffic signal. Otherwise, the warrant has not been met. Goto step 4.		
Outcome 2	**Signal Warrant has not being met. --> Go to step 4**	

Step 4: Estimate pedestrian delay.

Pedestrian Crossing Distance, curb to curb (ft), L	*4a*	**20**
Pedestrian Walking Speed (ft/s), Sp	*4b*	**4.0**
Pedestrian Start-up Time and End Clearance Time (s), ts	*4c*	**3**
Critical gap required for crossing pedestrian (s), tc = (L/Sp) + ts OR [(*4a/4b*) + *4c*)]	*4d*	**8**
Major Road Volume, total both approaches or approach being crossed if median refuge island is present during peak hour (veh/h), Vmaj-d	*4e*	**988**
Major road flow rate (veh/s), v = Vmaj-d / 3600 OR (4e / 3600)	*4f*	**0.274**
Average pedestrian delay (s/person), dp=(e$^{v\ tc}$ - v tc -1)/ v OR ((e$^{4f\ x\ 4d}$ - 4f*4d-1)/4f)	*4g*	**21**
Total pedestrian delay (h), **Dp** = (dp x Vp) / 3600 OR ((4g*2a)/3600) (this is estimated delay for all pedestrians crossing the major roadway without a crossing treatment - assumes 0% compliance). This calculated value can be replaced with the actual total pedestrian delay measured at the site.	*4h*	**1.1**

Step 5: Select treatment based upon total pedestrian delay and expected motorist compliance.

Expected motorist compliance at pedestrian crossing, Comp = High(1) or Low(2)	*5a*	**1**

Total Pedestrian Delay, Dp (from *4h*) and Motorist Compliance, Comp (from *5a*)	**Treatment Category** (see Description of sample Treatments for examples)
Dp ≥ 21.3 h (Comp = high or low) OR 5.3 h ≤ Dp < 21.3 h and Comp = low	~~RED Not Feasible~~
1.3 h ≤ Dp < 5.3 h (Comp = high or low) OR 5.3 h ≤ Dp < 21.3 h and Comp = high	~~ACTIVE / ENHANCED Not Feasible~~
Dp < 1.3 h (Comp = high or low)	**CROSSWALK**
If Outcome 1 or 2 are not satisfied	~~TREATMENT CATEGORY~~

WORKSHEET 1: PEAK-HOUR, 35 MPH (55 KM/H) OR LESS

Analyst and Site Information			SR#	
Analyst:	**Moe Lavasani**	Major Street:	**SW 21st Street**	
Analysis Date:	**10/22/2018**	Minor Street	**Ludlam Trail**	
Data Collection Date:	**9/20/2018**	Peak Hour:	**PM**	

Step 1: Select worksheet (speed reflects posted, statutory or 85th percentile speed on the major street):
a) Worksheet 1 - 35 mph (55 km/h) or less
b) Worksheet 2 - exceeds 35 mph (55 km/h), communities with less than 10,000, or where major transit stop exists

Step 2: Does the crossing meet minimum pedestrian volumes to be considered for a TCD type of treatment?

Pedestrian Volume during peak-hour (ped/h), Vp	*2a*	**191**
If *2a* ≥ 20 ped/h, then go to Step 3.		
If *2a* < 20 ped/h, then consider median refuge island, curb extension, traffic calming, etc. as feasible.		
Outcome 1	**Go to step 3**	

Step 3: Does the crossing meet the pedestrian volume warrant for a traffic signal?

Major Road Volume, total of both approaches during peak hour (veh/h), Vmaj-s	*3a*	**379**
Minimum signal warrant volume for peak hour (use *3a* for Vmaj-s), SC SC = (0.00021 Vmaj-s^2 - 0.74072 Vmaj-s + 734.125)/0.75 OR (0.00021 *3a*^{2} *- 0.74072 3a +734.125)/0.75*	*3b*	**645**
If *3b* < *133,* then enter 133, if *3b* ≥ *133* then enter *3b*	*3c*	**645**
If 15th percentile crossing speed of pedestrians is less than 3.5 ft/s (1.1 m/s), then reduce *3c* by up to 50 percent; otherwise enter *3c.*	*3d*	**645**
If *2a* ≥ 3d, then the warrant has been met and the traffic signal should be considered if not within 300 ft (91 m) of another traffic signal. Otherwise, the warrant has not been met. Goto step 4.		
Outcome 2	**Signal Warrant has not being met. --> Go to step 4**	

Step 4: Estimate pedestrian delay.

Pedestrian Crossing Distance, curb to curb (ft), L	*4a*	**24**
Pedestrian Walking Speed (ft/s), Sp	*4b*	**4.0**
Pedestrian Start-up Time and End Clearance Time (s), ts	*4c*	**3**
Critical gap required for crossing pedestrian (s), tc = (L/Sp) + ts OR [(*4a/4b*) + *4c*)]	*4d*	**9**
Major Road Volume, total both approaches or approach being crossed if median refuge island is present during peak hour (veh/h), Vmaj-d	*4e*	**379**
Major road flow rate (veh/s), v = Vmaj-d / 3600 OR (4e / 3600)	*4f*	**0.105**
Average pedestrian delay (s/person), dp=(e$^{v\ tc}$ - v tc -1)/ v OR ((e$^{4f\ x\ 4d}$ - 4f*4d-1)/4f)	*4g*	**6**
Total pedestrian delay (h), **Dp** = (dp x Vp) / 3600 OR ((4g*2a)/3600) (this is estimated delay for all pedestrians crossing the major roadway without a crossing treatment - assumes 0% compliance). This calculated value can be replaced with the actual total pedestrian delay measured at the site.	*4h*	**0.3**

Step 5: Select treatment based upon total pedestrian delay and expected motorist compliance.

Expected motorist compliance at pedestrian crossing, Comp = High(1) or Low(2)	*5a*	**1**

Total Pedestrian Delay, Dp (from *4h*) and Motorist Compliance, Comp (from *5a*)	**Treatment Category** (see Description of sample Treatments for examples)
Dp ≥ 21.3 h (Comp = high or low) OR 5.3 h ≤ Dp < 21.3 h and Comp = low	~~RED Not Feasible~~
1.3 h ≤ Dp < 5.3 h (Comp = high or low) OR 5.3 h ≤ Dp < 21.3 h and Comp = high	~~ACTIVE / ENHANCED Not Feasible~~
Dp < 1.3 h (Comp = high or low)	**CROSSWALK**
If Outcome 1 or 2 are not satisfied	~~TREATMENT CATEGORY~~

WORKSHEET 1: PEAK-HOUR, 35 MPH (55 KM/H) OR LESS

Analyst and Site Information			SR#	
Analyst:	**Moe Lavasani**	Major Street:	**SW 22nd Street**	
Analysis Date:	**10/22/2018**	Minor Street	**Ludlam Trail**	
Data Collection Date:	**9/20/2018**	Peak Hour:	**PM**	

Step 1: Select worksheet (speed reflects posted, statutory or 85th percentile speed on the major street):
a) Worksheet 1 - 35 mph (55 km/h) or less
b) Worksheet 2 - exceeds 35 mph (55 km/h), communities with less than 10,000, or where major transit stop exists

Step 2: Does the crossing meet minimum pedestrian volumes to be considered for a TCD type of treatment?

Pedestrian Volume during peak-hour (ped/h), Vp	*2a*	**191**
If *2a* ≥ 20 ped/h, then go to Step 3.		
If *2a* < 20 ped/h, then consider median refuge island, curb extension, traffic calming, etc. as feasible.		
Outcome 1	**Go to step 3**	

Step 3: Does the crossing meet the pedestrian volume warrant for a traffic signal?

Major Road Volume, total of both approaches during peak hour (veh/h), Vmaj-s	*3a*	**385**
Minimum signal warrant volume for peak hour (use *3a* for Vmaj-s), SC SC = (0.00021 Vmaj-s^2 - 0.74072 Vmaj-s + 734.125)/0.75 OR (0.00021 *3a*^{2} *- 0.74072 3a +734.125)/0.75*	*3b*	**640**
If *3b* < *133,* then enter 133, if *3b* ≥ *133* then enter *3b*	*3c*	**640**
If 15th percentile crossing speed of pedestrians is less than 3.5 ft/s (1.1 m/s), then reduce *3c* by up to 50 percent; otherwise enter *3c.*	*3d*	**640**
If *2a* ≥ 3d, then the warrant has been met and the traffic signal should be considered if not within 300 ft (91 m) of another traffic signal. Otherwise, the warrant has not been met. Goto step 4.		
Outcome 2	**Signal Warrant has not being met. --> Go to step 4**	

Step 4: Estimate pedestrian delay.

Pedestrian Crossing Distance, curb to curb (ft), L	*4a*	**24**
Pedestrian Walking Speed (ft/s), Sp	*4b*	**4.0**
Pedestrian Start-up Time and End Clearance Time (s), ts	*4c*	**3**
Critical gap required for crossing pedestrian (s), tc = (L/Sp) + ts OR [(*4a/4b*) + *4c*)]	*4d*	**9**
Major Road Volume, total both approaches or approach being crossed if median refuge island is present during peak hour (veh/h), Vmaj-d	*4e*	**385**
Major road flow rate (veh/s), v = Vmaj-d / 3600 OR (4e / 3600)	*4f*	**0.107**
Average pedestrian delay (s/person), dp=($e^{v\ tc}$ - v tc -1)/ v OR (($e^{4f\ x\ 4d}$ - 4f*4d-1)/4f)	*4g*	**6**
Total pedestrian delay (h), **Dp** = (dp x Vp) / 3600 OR ((4g*2a)/3600) (this is estimated delay for all pedestrians crossing the major roadway without a crossing treatment - assumes 0% compliance). This calculated value can be replaced with the actual total pedestrian delay measured at the site.	*4h*	**0.3**

Step 5: Select treatment based upon total pedestrian delay and expected motorist compliance.

Expected motorist compliance at pedestrian crossing, Comp = High(1) or Low(2)	*5a*	**1**

Total Pedestrian Delay, Dp (from *4h*) and Motorist Compliance, Comp (from *5a*)	**Treatment Category** (see Description of sample Treatments for examples)
Dp ≥ 21.3 h (Comp = high or low) OR 5.3 h ≤ Dp < 21.3 h and Comp = low	~~RED Not Feasible~~
1.3 h ≤ Dp < 5.3 h (Comp = high or low) OR 5.3 h ≤ Dp < 21.3 h and Comp = high	~~ACTIVE / ENHANCED Not Feasible~~
Dp < 1.3 h (Comp = high or low)	**CROSSWALK**
If Outcome 1 or 2 are not satisfied	~~TREATMENT CATEGORY~~

WORKSHEET 1: PEAK-HOUR, 35 MPH (55 KM/H) OR LESS

Analyst and Site Information			SR#	
Analyst:	**Moe Lavasani**	Major Street:	**SW 24th Street**	
Analysis Date:	**10/22/2018**	Minor Street	**Ludlam Trail**	
Data Collection Date:	**9/20/2018**	Peak Hour:	**AM**	

Step 1: Select worksheet (speed reflects posted, statutory or 85th percentile speed on the major street):
a) Worksheet 1 - 35 mph (55 km/h) or less
b) Worksheet 2 - exceeds 35 mph (55 km/h), communities with less than 10,000, or where major transit stop exists

Step 2: Does the crossing meet minimum pedestrian volumes to be considered for a TCD type of treatment?

Pedestrian Volume during peak-hour (ped/h), Vp	*2a*	**191**

If *2a* ≥ 20 ped/h, then go to Step 3.

If *2a* < 20 ped/h, then consider median refuge island, curb extension, traffic calming, etc. as feasible.

Outcome 1	**Go to step 3**

Step 3: Does the crossing meet the pedestrian volume warrant for a traffic signal?

Major Road Volume, total of both approaches during peak hour (veh/h), Vmaj-s	*3a*	**3926**
Minimum signal warrant volume for peak hour (use *3a* for Vmaj-s), SC SC = (0.00021 Vmaj-s^2 - 0.74072 Vmaj-s + 734.125)/0.75 OR (0.00021 *3a*^{2} *- 0.74072 3a +734.125)/0.75*	*3b*	**1417**
If *3b* < *133,* then enter 133, if *3b* ≥ *133* then enter *3b*	*3c*	**1417**
If 15th percentile crossing speed of pedestrians is less than 3.5 ft/s (1.1 m/s), then reduce *3c* by up to 50 percent; otherwise enter *3c.*	*3d*	**1417**

If *2a* ≥ 3d, then the warrant has been met and the traffic signal should be considered if not within 300 ft (91 m) of another traffic signal. Otherwise, the warrant has not been met. Goto step 4.

Outcome 2	**Signal Warrant has not being met. --> Go to step 4**

Step 4: Estimate pedestrian delay.

Pedestrian Crossing Distance, curb to curb (ft), L	*4a*	**40**
Pedestrian Walking Speed (ft/s), Sp	*4b*	**4.0**
Pedestrian Start-up Time and End Clearance Time (s), ts	*4c*	**3**
Critical gap required for crossing pedestrian (s), tc = (L/Sp) + ts OR [(*4a/4b*) + *4c*)]	*4d*	**13**
Major Road Volume, total both approaches or approach being crossed if median refuge island is present during peak hour (veh/h), Vmaj-d	*4e*	**2362**
Major road flow rate (veh/s), v = Vmaj-d / 3600 OR (4e / 3600)	*4f*	**0.656**
Average pedestrian delay (s/person), dp=(e$^{v\ tc}$ - v tc -1)/ v OR ((e$^{4f\ x\ 4d}$ - 4f*4d-1)/4f)	*4g*	**7700**
Total pedestrian delay (h), **Dp** = (dp x Vp) / 3600 OR ((4g*2a)/3600) (this is estimated delay for all pedestrians crossing the major roadway without a crossing treatment - assumes 0% compliance). This calculated value can be replaced with the actual total pedestrian delay measured at the site.	*4h*	**408.5**

Step 5: Select treatment based upon total pedestrian delay and expected motorist compliance.

Expected motorist compliance at pedestrian crossing, Comp = High(1) or Low(2)	*5a*	**1**

Total Pedestrian Delay, Dp (from *4h*) and Motorist Compliance, Comp (from *5a*)	**Treatment Category** (see Description of sample Treatments for examples)
Dp ≥ 21.3 h (Comp = high or low) OR 5.3 h ≤ Dp < 21.3 h and Comp = low	**RED**
1.3 h ≤ Dp < 5.3 h (Comp = high or low) OR 5.3 h ≤ Dp < 21.3 h and Comp = high	~~ACTIVE / ENHANCED Not Feasible~~
Dp < 1.3 h (Comp = high or low)	~~CROSSWALK Not Feasible~~
If Outcome 1 or 2 are not satisfied	~~TREATMENT CATEGORY~~

WORKSHEET 1: PEAK-HOUR, 35 MPH (55 KM/H) OR LESS

Analyst and Site Information			SR#	
Analyst:	**Moe Lavasani**	Major Street:	**N Waterway Drive**	
Analysis Date:	**10/22/2018**	Minor Street	**Ludlam Trail**	
Data Collection Date:	**9/20/2018**	Peak Hour:	**PM**	

Step 1: Select worksheet (speed reflects posted, statutory or 85th percentile speed on the major street):
a) Worksheet 1 - 35 mph (55 km/h) or less
b) Worksheet 2 - exceeds 35 mph (55 km/h), communities with less than 10,000, or where major transit stop exists

Step 2: Does the crossing meet minimum pedestrian volumes to be considered for a TCD type of treatment?

Pedestrian Volume during peak-hour (ped/h), Vp	*2a*	**191**

If *2a* ≥ 20 ped/h, then go to Step 3.

If *2a* < 20 ped/h, then consider median refuge island, curb extension, traffic calming, etc. as feasible.

Outcome 1	Go to step 3

Step 3: Does the crossing meet the pedestrian volume warrant for a traffic signal?

Major Road Volume, total of both approaches during peak hour (veh/h), Vmaj-s	*3a*	**1331**
Minimum signal warrant volume for peak hour (use *3a* for Vmaj-s), SC SC = (0.00021 Vmaj-s^2 - 0.74072 Vmaj-s + 734.125)/0.75 OR (0.00021 *3a*^{2} *- 0.74072 3a +734.125)/0.75*	*3b*	**160**
If *3b* < *133,* then enter 133, if *3b* ≥ *133* then enter *3b*	*3c*	**160**
If 15th percentile crossing speed of pedestrians is less than 3.5 ft/s (1.1 m/s), then reduce *3c* by up to 50 percent; otherwise enter *3c.*	*3d*	**160**

If *2a* ≥ 3d, then the warrant has been met and the traffic signal should be considered if not within 300 ft (91 m) of another traffic signal. Otherwise, the warrant has not been met. Goto step 4.

Outcome 2	Signal Warrant has being met consider Traffic Signal

Step 4: Estimate pedestrian delay.

Pedestrian Crossing Distance, curb to curb (ft), L	*4a*	**22**
Pedestrian Walking Speed (ft/s), Sp	*4b*	**4.0**
Pedestrian Start-up Time and End Clearance Time (s), ts	*4c*	**3**
Critical gap required for crossing pedestrian (s), tc = (L/Sp) + ts OR [(*4a/4b*) + *4c*)]	*4d*	**9**
Major Road Volume, total both approaches or approach being crossed if median refuge island is present during peak hour (veh/h), Vmaj-d	*4e*	**1331**
Major road flow rate (veh/s), v = Vmaj-d / 3600 OR (4e / 3600)	*4f*	**0.370**
Average pedestrian delay (s/person), dp=($e^{v\ tc}$ - v tc -1)/ v OR (($e^{4f \times 4d}$ - 4f*4d-1)/4f)	*4g*	**51**
Total pedestrian delay (h), **Dp** = (dp x Vp) / 3600 OR ((4g*2a)/3600) (this is estimated delay for all pedestrians crossing the major roadway without a crossing treatment - assumes 0% compliance). This calculated value can be replaced with the actual total pedestrian delay measured at the site.	*4h*	**2.7**

Step 5: Select treatment based upon total pedestrian delay and expected motorist compliance.

Expected motorist compliance at pedestrian crossing, Comp = High(1) or Low(2)	*5a*	**1**

Total Pedestrian Delay, Dp (from *4h*) and Motorist Compliance, Comp (from *5a*)	**Treatment Category** (see Description of sample Treatments for examples)
Dp ≥ 21.3 h (Comp = high or low) OR 5.3 h ≤ Dp < 21.3 h and Comp = low	~~RED Not Feasible~~
1.3 h ≤ Dp < 5.3 h (Comp = high or low) OR 5.3 h ≤ Dp < 21.3 h and Comp = high	~~RED Not Feasible~~
Dp < 1.3 h (Comp = high or low)	~~CROSSWALK Not Feasible~~
If Outcome 1 or 2 are not satisfied	**CONSIDER TRAFFIC SIGNAL**

WORKSHEET 2: PEAK-HOUR, EXCEEDS 35 MPH (55 KM/H)

Analyst and Site Information			SR#	
Analyst:	**Moe Lavasani**	Major Street:	**SW 40th Street**	
Analysis Date:	**10/22/2018**	Minor Street	**Ludlam Trail**	
Data Collection Date:	**9/20/2018**	Peak Hour:	**AM**	

Step 1: Select worksheet (speed reflects posted, statutory or 85th percentile speed on the major street):
a) Worksheet 1 - 35 mph (55 km/h) or less
b) Worksheet 2 - exceeds 35 mph (55 km/h), communities with less than 10,000, or where major transit stop exists

Step 2: Does the crossing meet minimum pedestrian volumes to be considered for a TCD type of treatment?

Pedestrian Volume during peak-hour (ped/h), Vp	*2a*	**191**
If *2a* ≥ 14 ped/h, then go to Step 3.		
If *2a* < 14 ped/h, then consider median refuge island, curb extension, traffic calming, etc. as feasible.		
Outcome 1	**Go to step 3**	

Step 3: Does the crossing meet the pedestrian volume warrant for a traffic signal?

Major Road Volume, total of both approaches during peak hour (veh/h), Vmaj-s	*3a*	**6092**
Minimum signal warrant volume for peak hour (use *3a* for Vmaj-s), SC SC = (0.00035 Vmaj-s^2 - 0.80083 Vmaj-s + 529.197)/0.75 OR (0.00035 *3a*^{2} *- 0.80083 3a + 529.197)/0.75*	*3b*	**11520**
If *3b* < *93,* then enter 93, if *3b* ≥ *93* then enter *3b*	*3c*	**11520**
If 15th percentile crossing speed of pedestrians is less than 3.5 ft/s (1.1 m/s), then reduce *3c* by up to 50 percent; otherwise enter *3c.*	*3d*	**11520**
If *2a* ≥ 3d, then the warrant has been met and the traffic signal should be considered if not within 300 ft (91 m) of another traffic signal. Otherwise, the warrant has not been met. Goto step 4.		
Outcome 2	**Signal Warrant has not being met. --> Go to step 4**	

Step 4: Estimate pedestrian delay.

Pedestrian Crossing Distance, curb to curb (ft), L	*4a*	**40**
Pedestrian Walking Speed (ft/s), Sp	*4b*	**4.0**
Pedestrian Start-up Time and End Clearance Time (s), ts	*4c*	**3**
Critical gap required for crossing pedestrian (s), tc = (L/Sp) + ts OR [(*4a/4b*) + *4c*)]	*4d*	**13**
Major Road Volume, total both approaches or approach being crossed if median refuge island is present during peak hour (veh/h), Vmaj-d	*4e*	**3639**
Major road flow rate (veh/s), v = (Vmaj-d/0.7) / 3600 OR (4e/0.7 / 3600)	*4f*	**1.444**
Average pedestrian delay (s/person), dp=(e$^{v\ tc}$ - v tc -1)/ v OR ((e$^{4f\ x\ 4d}$ - 4f*4d-1)/4f)	*4g*	**98460784**
Total pedestrian delay (h), **Dp** = (dp x Vp) / 3600 OR ((4g*2a)/3600) (this is estimated delay for all pedestrians crossing the major roadway without a crossing treatment - assumes 0% compliance). This calculated value can be replaced with the actual total pedestrian delay measured at the site.	*4h*	**5223891.6**

Step 5: Select treatment based upon total pedestrian delay and expected motorist compliance.

Expected motorist compliance at pedestrian crossing, Comp = High(1) or Low(2)	*5a*	**1**

Total Pedestrian Delay, Dp (from *4h*) and Motorist Compliance, Comp (from *5a*)	**Treatment Category** (see Description of sample Treatments for examples)
Dp ≥ 21.3 h (Comp = high or low) OR 5.3 h ≤ Dp < 21.3 h and Comp = low	**RED**
Dp < 5.3 h (Comp = high or low) OR 5.3 h ≤ Dp < 21.3 h and Comp = high	~~ACTIVE / ENHANCED Not Feasible~~
If Outcome 1 or 2 are not satisfied	~~TREATMENT CATEGORY~~

WORKSHEET 2: PEAK-HOUR, EXCEEDS 35 MPH (55 KM/H)

Analyst and Site Information			SR#	
Analyst:	**Moe Lavasani**	Major Street:	**SW 56th Street**	
Analysis Date:	**10/22/2018**	Minor Street	**Ludlam Trail**	
Data Collection Date:	**9/20/2018**	Peak Hour:	**AM**	

Step 1: Select worksheet (speed reflects posted, statutory or 85th percentile speed on the major street):
a) Worksheet 1 - 35 mph (55 km/h) or less
b) Worksheet 2 - exceeds 35 mph (55 km/h), communities with less than 10,000, or where major transit stop exists

Step 2: Does the crossing meet minimum pedestrian volumes to be considered for a TCD type of treatment?

Pedestrian Volume during peak-hour (ped/h), Vp	*2a*	**191**
If *2a* ≥ 14 ped/h, then go to Step 3.		
If *2a* < 14 ped/h, then consider median refuge island, curb extension, traffic calming, etc. as feasible.		
Outcome 1	**Go to step 3**	

Step 3: Does the crossing meet the pedestrian volume warrant for a traffic signal?

Major Road Volume, total of both approaches during peak hour (veh/h), Vmaj-s	*3a*	**3119**
Minimum signal warrant volume for peak hour (use *3a* for Vmaj-s), SC SC = (0.00035 Vmaj-s^2 - 0.80083 Vmaj-s + 529.197)/0.75 OR (0.00035 *3a*^{2} *- 0.80083 3a + 529.197)/0.75*	*3b*	**1915**
If *3b* < *93,* then enter 93, if *3b* ≥ *93* then enter *3b*	*3c*	**1915**
If 15th percentile crossing speed of pedestrians is less than 3.5 ft/s (1.1 m/s), then reduce *3c* by up to 50 percent; otherwise enter *3c.*	*3d*	**1915**
If *2a* ≥ 3d, then the warrant has been met and the traffic signal should be considered if not within 300 ft (91 m) of another traffic signal. Otherwise, the warrant has not been met. Goto step 4.		
Outcome 2	**Signal Warrant has not being met. --> Go to step 4**	

Step 4: Estimate pedestrian delay.

Pedestrian Crossing Distance, curb to curb (ft), L	*4a*	**65**
Pedestrian Walking Speed (ft/s), Sp	*4b*	**4.0**
Pedestrian Start-up Time and End Clearance Time (s), ts	*4c*	**3**
Critical gap required for crossing pedestrian (s), tc = (L/Sp) + ts OR [(*4a/4b*) + *4c*)]	*4d*	**19**
Major Road Volume, total both approaches or approach being crossed if median refuge island is present during peak hour (veh/h), Vmaj-d	*4e*	**3119**
Major road flow rate (veh/s), v = (Vmaj-d/0.7) / 3600 OR (4e/0.7 / 3600)	*4f*	**1.238**
Average pedestrian delay (s/person), dp=(e$^{v\ tc}$ - v tc -1)/ v OR ((e$^{4f\ x\ 4d}$ - 4f*4d-1)/4f)	*4g*	**17978472506**
Total pedestrian delay (h), **Dp** = (dp x Vp) / 3600 OR ((4g*2a)/3600) (this is estimated delay for all pedestrians crossing the major roadway without a crossing treatment - assumes 0% compliance). This calculated value can be replaced with the actual total pedestrian delay measured at the site.	*4h*	**953857846.9**

Step 5: Select treatment based upon total pedestrian delay and expected motorist compliance.

Expected motorist compliance at pedestrian crossing, Comp = High(1) or Low(2)	*5a*	**1**

Total Pedestrian Delay, Dp (from *4h*) and Motorist Compliance, Comp (from *5a*)	**Treatment Category** (see Description of sample Treatments for examples)
Dp ≥ 21.3 h (Comp = high or low) OR 5.3 h ≤ Dp < 21.3 h and Comp = low	**RED**
Dp < 5.3 h (Comp = high or low) OR 5.3 h ≤ Dp < 21.3 h and Comp = high	~~ACTIVE / ENHANCED Not Feasible~~
If Outcome 1 or 2 are not satisfied	~~TREATMENT CATEGORY~~

WORKSHEET 1: PEAK-HOUR, 35 MPH (55 KM/H) OR LESS

Analyst and Site Information			SR#	
Analyst:	**Moe Lavasani**	Major Street:	**SW 60th Street**	
Analysis Date:	**10/22/2018**	Minor Street	**Ludlam Trail**	
Data Collection Date:	**9/20/2018**	Peak Hour:	**PM**	

Step 1: Select worksheet (speed reflects posted, statutory or 85th percentile speed on the major street):
a) Worksheet 1 - 35 mph (55 km/h) or less
b) Worksheet 2 - exceeds 35 mph (55 km/h), communities with less than 10,000, or where major transit stop exists

Step 2: Does the crossing meet minimum pedestrian volumes to be considered for a TCD type of treatment?

Pedestrian Volume during peak-hour (ped/h), Vp	*2a*	**191**
If *2a* ≥ 20 ped/h, then go to Step 3.		
If *2a* < 20 ped/h, then consider median refuge island, curb extension, traffic calming, etc. as feasible.		
Outcome 1	**Go to step 3**	

Step 3: Does the crossing meet the pedestrian volume warrant for a traffic signal?

Major Road Volume, total of both approaches during peak hour (veh/h), Vmaj-s	*3a*	**271**
Minimum signal warrant volume for peak hour (use *3a* for Vmaj-s), SC SC = (0.00021 Vmaj-s^2 - 0.74072 Vmaj-s + 734.125)/0.75 OR (0.00021 *3a*^{2} *- 0.74072 3a +734.125)/0.75*	*3b*	**732**
If *3b* < *133,* then enter 133, if *3b* ≥ *133* then enter *3b*	*3c*	**732**
If 15th percentile crossing speed of pedestrians is less than 3.5 ft/s (1.1 m/s), then reduce *3c* by up to 50 percent; otherwise enter *3c.*	*3d*	**732**
If *2a* ≥ 3d, then the warrant has been met and the traffic signal should be considered if not within 300 ft (91 m) of another traffic signal. Otherwise, the warrant has not been met. Goto step 4.		
Outcome 2	**Signal Warrant has not being met. --> Go to step 4**	

Step 4: Estimate pedestrian delay.

Pedestrian Crossing Distance, curb to curb (ft), L	*4a*	**24**
Pedestrian Walking Speed (ft/s), Sp	*4b*	**4.0**
Pedestrian Start-up Time and End Clearance Time (s), ts	*4c*	**3**
Critical gap required for crossing pedestrian (s), tc = (L/Sp) + ts OR [(*4a/4b*) + *4c*)]	*4d*	**9**
Major Road Volume, total both approaches or approach being crossed if median refuge island is present during peak hour (veh/h), Vmaj-d	*4e*	**271**
Major road flow rate (veh/s), v = Vmaj-d / 3600 OR (4e / 3600)	*4f*	**0.075**
Average pedestrian delay (s/person), dp=($e^{v\ tc}$ - v tc -1)/ v OR (($e^{4f \times 4d}$ - 4f*4d-1)/4f)	*4g*	**4**
Total pedestrian delay (h), **Dp** = (dp x Vp) / 3600 OR ((4g*2a)/3600) (this is estimated delay for all pedestrians crossing the major roadway without a crossing treatment - assumes 0% compliance). This calculated value can be replaced with the actual total pedestrian delay measured at the site.	*4h*	**0.2**

Step 5: Select treatment based upon total pedestrian delay and expected motorist compliance.

Expected motorist compliance at pedestrian crossing, Comp = High(1) or Low(2)	*5a*	**1**

Total Pedestrian Delay, Dp (from *4h*) and Motorist Compliance, Comp (from *5a*)	**Treatment Category** (see Description of sample Treatments for examples)
Dp ≥ 21.3 h (Comp = high or low) OR 5.3 h ≤ Dp < 21.3 h and Comp = low	~~RED Not Feasible~~
1.3 h ≤ Dp < 5.3 h (Comp = high or low) OR 5.3 h ≤ Dp < 21.3 h and Comp = high	~~ACTIVE / ENHANCED Not Feasible~~
Dp < 1.3 h (Comp = high or low)	**CROSSWALK**
If Outcome 1 or 2 are not satisfied	~~TREATMENT CATEGORY~~

WORKSHEET 1: PEAK-HOUR, 35 MPH (55 KM/H) OR LESS

Analyst and Site Information			SR#	
Analyst:	**Moe Lavasani**	Major Street:	**SW 64th Street**	
Analysis Date:	**10/22/2018**	Minor Street	**Ludlam Trail**	
Data Collection Date:	**9/20/2018**	Peak Hour:	**AM**	

Step 1: Select worksheet (speed reflects posted, statutory or 85th percentile speed on the major street):
a) Worksheet 1 - 35 mph (55 km/h) or less
b) Worksheet 2 - exceeds 35 mph (55 km/h), communities with less than 10,000, or where major transit stop exists

Step 2: Does the crossing meet minimum pedestrian volumes to be considered for a TCD type of treatment?

Pedestrian Volume during peak-hour (ped/h), Vp	*2a*	**191**
If *2a* ≥ 20 ped/h, then go to Step 3.		
If *2a* < 20 ped/h, then consider median refuge island, curb extension, traffic calming, etc. as feasible.		
Outcome 1	**Go to step 3**	

Step 3: Does the crossing meet the pedestrian volume warrant for a traffic signal?

Major Road Volume, total of both approaches during peak hour (veh/h), Vmaj-s	*3a*	**1013**
Minimum signal warrant volume for peak hour (use *3a* for Vmaj-s), SC SC = (0.00021 Vmaj-s^2 - 0.74072 Vmaj-s + 734.125)/0.75 OR (0.00021 *3a*^{2} *- 0.74072 3a +734.125)/0.75*	*3b*	**266**
If *3b* < *133,* then enter 133, if *3b* ≥ *133* then enter *3b*	*3c*	**266**
If 15th percentile crossing speed of pedestrians is less than 3.5 ft/s (1.1 m/s), then reduce *3c* by up to 50 percent; otherwise enter *3c.*	*3d*	**266**
If *2a* ≥ 3d, then the warrant has been met and the traffic signal should be considered if not within 300 ft (91 m) of another traffic signal. Otherwise, the warrant has not been met. Goto step 4.		
Outcome 2	**Signal Warrant has not being met. --> Go to step 4**	

Step 4: Estimate pedestrian delay.

Pedestrian Crossing Distance, curb to curb (ft), L	*4a*	**24**
Pedestrian Walking Speed (ft/s), Sp	*4b*	**4.0**
Pedestrian Start-up Time and End Clearance Time (s), ts	*4c*	**3**
Critical gap required for crossing pedestrian (s), tc = (L/Sp) + ts OR [(*4a/4b*) + *4c*)]	*4d*	**9**
Major Road Volume, total both approaches or approach being crossed if median refuge island is present during peak hour (veh/h), Vmaj-d	*4e*	**1013**
Major road flow rate (veh/s), v = Vmaj-d / 3600 OR (4e / 3600)	*4f*	**0.281**
Average pedestrian delay (s/person), dp=($e^{v\ tc}$ - v tc -1)/ v OR (($e^{4f\ x\ 4d}$ - 4f*4d-1)/4f)	*4g*	**32**
Total pedestrian delay (h), **Dp** = (dp x Vp) / 3600 OR ((4g*2a)/3600) (this is estimated delay for all pedestrians crossing the major roadway without a crossing treatment - assumes 0% compliance). This calculated value can be replaced with the actual total pedestrian delay measured at the site.	*4h*	**1.7**

Step 5: Select treatment based upon total pedestrian delay and expected motorist compliance.

Expected motorist compliance at pedestrian crossing, Comp = High(1) or Low(2)	*5a*	**1**

Total Pedestrian Delay, Dp (from *4h*) and Motorist Compliance, Comp (from *5a*)	**Treatment Category** (see Description of sample Treatments for examples)
Dp ≥ 21.3 h (Comp = high or low) OR 5.3 h ≤ Dp < 21.3 h and Comp = low	~~RED Not Feasible~~
1.3 h ≤ Dp < 5.3 h (Comp = high or low) OR 5.3 h ≤ Dp < 21.3 h and Comp = high	**ACTIVE / ENHANCED**
Dp < 1.3 h (Comp = high or low)	~~CROSSWALK Not Feasible~~
If Outcome 1 or 2 are not satisfied	~~TREATMENT CATEGORY~~

WORKSHEET 2: PEAK-HOUR, EXCEEDS 35 MPH (55 KM/H)

Analyst and Site Information			SR#	
Analyst:	**Moe Lavasani**	Major Street:	**SW 56th Street**	
Analysis Date:	**10/22/2018**	Minor Street	**Ludlam Trail**	
Data Collection Date:	**9/20/2018**	Peak Hour:	**AM**	

Step 1: Select worksheet (speed reflects posted, statutory or 85th percentile speed on the major street):
a) Worksheet 1 - 35 mph (55 km/h) or less
b) Worksheet 2 - exceeds 35 mph (55 km/h), communities with less than 10,000, or where major transit stop exists

Step 2: Does the crossing meet minimum pedestrian volumes to be considered for a TCD type of treatment?

Pedestrian Volume during peak-hour (ped/h), Vp	*2a*	**191**
If *2a* ≥ 14 ped/h, then go to Step 3.		
If *2a* < 14 ped/h, then consider median refuge island, curb extension, traffic calming, etc. as feasible.		
Outcome 1	**Go to step 3**	

Step 3: Does the crossing meet the pedestrian volume warrant for a traffic signal?

Major Road Volume, total of both approaches during peak hour (veh/h), Vmaj-s	*3a*	**3550**
Minimum signal warrant volume for peak hour (use *3a* for Vmaj-s), SC SC = (0.00035 Vmaj-s^2 - 0.80083 Vmaj-s + 529.197)/0.75 OR (0.00035 *3a*^{2} *- 0.80083 3a + 529.197)/0.75*	*3b*	**2796**
If *3b* < *93,* then enter 93, if *3b* ≥ *93* then enter *3b*	*3c*	**2796**
If 15th percentile crossing speed of pedestrians is less than 3.5 ft/s (1.1 m/s), then reduce *3c* by up to 50 percent; otherwise enter *3c.*	*3d*	**2796**
If *2a* ≥ 3d, then the warrant has been met and the traffic signal should be considered if not within 300 ft (91 m) of another traffic signal. Otherwise, the warrant has not been met. Goto step 4.		
Outcome 2	**Signal Warrant has not being met. --> Go to step 4**	

Step 4: Estimate pedestrian delay.

Pedestrian Crossing Distance, curb to curb (ft), L	*4a*	**65**
Pedestrian Walking Speed (ft/s), Sp	*4b*	**4.0**
Pedestrian Start-up Time and End Clearance Time (s), ts	*4c*	**3**
Critical gap required for crossing pedestrian (s), tc = (L/Sp) + ts OR [(*4a/4b*) + *4c*)]	*4d*	**19**
Major Road Volume, total both approaches or approach being crossed if median refuge island is present during peak hour (veh/h), Vmaj-d	*4e*	**2168**
Major road flow rate (veh/s), v = (Vmaj-d/0.7) / 3600 OR (4e/0.7 / 3600)	*4f*	**0.860**
Average pedestrian delay (s/person), dp=($e^{v\ tc}$ - v tc -1)/ v OR (($e^{4f\ x\ 4d}$ - 4f*4d-1)/4f)	*4g*	**18102558**
Total pedestrian delay (h), **Dp** = (dp x Vp) / 3600 OR ((4g*2a)/3600) (this is estimated delay for all pedestrians crossing the major roadway without a crossing treatment - assumes 0% compliance). This calculated value can be replaced with the actual total pedestrian delay measured at the site.	*4h*	**960441.3**

Step 5: Select treatment based upon total pedestrian delay and expected motorist compliance.

Expected motorist compliance at pedestrian crossing, Comp = High(1) or Low(2)	*5a*	**1**

Total Pedestrian Delay, Dp (from *4h*) and Motorist Compliance, Comp (from *5a*)	**Treatment Category** (see Description of sample Treatments for examples)
Dp ≥ 21.3 h (Comp = high or low) OR 5.3 h ≤ Dp < 21.3 h and Comp = low	**RED**
Dp < 5.3 h (Comp = high or low) OR 5.3 h ≤ Dp < 21.3 h and Comp = high	~~ACTIVE / ENHANCED Not Feasible~~
If Outcome 1 or 2 are not satisfied	~~TREATMENT CATEGORY~~

WORKSHEET 1: PEAK-HOUR, 35 MPH (55 KM/H) OR LESS

Analyst and Site Information			SR#	
Analyst:	**Moe Lavasani**	Major Street:	**SW 80th Street**	
Analysis Date:	**10/22/2018**	Minor Street	**Ludlam Trail**	
Data Collection Date:	**9/20/2018**	Peak Hour:	**PM**	

Step 1: Select worksheet (speed reflects posted, statutory or 85th percentile speed on the major street):
a) Worksheet 1 - 35 mph (55 km/h) or less
b) Worksheet 2 - exceeds 35 mph (55 km/h), communities with less than 10,000, or where major transit stop exists

Step 2: Does the crossing meet minimum pedestrian volumes to be considered for a TCD type of treatment?

Pedestrian Volume during peak-hour (ped/h), Vp	*2a*	**191**

If *2a* ≥ 20 ped/h, then go to Step 3.

If *2a* < 20 ped/h, then consider median refuge island, curb extension, traffic calming, etc. as feasible.

Outcome 1	Go to step 3

Step 3: Does the crossing meet the pedestrian volume warrant for a traffic signal?

Major Road Volume, total of both approaches during peak hour (veh/h), Vmaj-s	*3a*	**1246**
Minimum signal warrant volume for peak hour (use *3a* for Vmaj-s), SC SC = (0.00021 Vmaj-s^2 - 0.74072 Vmaj-s + 734.125)/0.75 OR (0.00021 *3a*^{2} *- 0.74072 3a +734.125)/0.75*	*3b*	**183**
If *3b* < *133,* then enter 133, if *3b* ≥ *133* then enter *3b*	*3c*	**183**
If 15th percentile crossing speed of pedestrians is less than 3.5 ft/s (1.1 m/s), then reduce *3c* by up to 50 percent; otherwise enter *3c.*	*3d*	**183**

If *2a* ≥ 3d, then the warrant has been met and the traffic signal should be considered if not within 300 ft (91 m) of another traffic signal. Otherwise, the warrant has not been met. Goto step 4.

Outcome 2	Signal Warrant has being met consider Traffic Signal

Step 4: Estimate pedestrian delay.

Pedestrian Crossing Distance, curb to curb (ft), L	*4a*	**36**
Pedestrian Walking Speed (ft/s), Sp	*4b*	**4.0**
Pedestrian Start-up Time and End Clearance Time (s), ts	*4c*	**3**
Critical gap required for crossing pedestrian (s), tc = (L/Sp) + ts OR [(*4a/4b*) + *4c*)]	*4d*	**12**
Major Road Volume, total both approaches or approach being crossed if median refuge island is present during peak hour (veh/h), Vmaj-d	*4e*	**1246**
Major road flow rate (veh/s), v = Vmaj-d / 3600 OR (4e / 3600)	*4f*	**0.346**
Average pedestrian delay (s/person), dp=($e^{v\ tc}$ - v tc -1)/ v OR (($e^{4f \times 4d}$ - 4f*4d-1)/4f)	*4g*	**169**
Total pedestrian delay (h), **Dp** = (dp x Vp) / 3600 OR ((4g*2a)/3600) (this is estimated delay for all pedestrians crossing the major roadway without a crossing treatment - assumes 0% compliance). This calculated value can be replaced with the actual total pedestrian delay measured at the site.	*4h*	**9.0**

Step 5: Select treatment based upon total pedestrian delay and expected motorist compliance.

Expected motorist compliance at pedestrian crossing, Comp = High(1) or Low(2)	*5a*	**1**

Total Pedestrian Delay, Dp (from *4h*) and Motorist Compliance, Comp (from *5a*)	**Treatment Category** (see Description of sample Treatments for examples)
Dp ≥ 21.3 h (Comp = high or low) OR 5.3 h ≤ Dp < 21.3 h and Comp = low	~~RED Not Feasible~~
1.3 h ≤ Dp < 5.3 h (Comp = high or low) OR 5.3 h ≤ Dp < 21.3 h and Comp = high	~~RED Not Feasible~~
Dp < 1.3 h (Comp = high or low)	~~CROSSWALK Not Feasible~~
If Outcome 1 or 2 are not satisfied	**CONSIDER TRAFFIC SIGNAL**

Appendix M – Safety Report

Table of Contents

1.0 Introduction 1
2.0 Crash Analysis 2
2.1 Identification of Crash Clusters 4
2.2 Pedestrian and Bicycle Crashes 6
3.0 Comparison of Crash Statistics from Similar Pedestrian/Bicycle Trails 6
4.0 Findings and Recommendations 8

List of Figures

Figure 1: Location of Ludlam Trail Corridor 1
Figure 2: Crash Summary by Severity 2
Figure 3: Crash Summary by Type 2
Figure 4: Clusters of All Crashes Types (2013-2017) 5
Figure 5: Clusters of Crashes - Pedestrian and Bicycle (2013-2017) 7

List of Tables

Table 1: Crash Summary 3
Table 2: 2015 HCL Review 4
Table 3: Summary of Crash Statistics for Trail Corridors 6

List of Appendix

Appendix A. Ludlam Trail Corridor Crash Summaries

1.0 Introduction

This report documents the crash analysis results for the Ludlam Trail Corridor between NW 7th Avenue and SW 80th Street with a half-mile buffer from the trail alignment.

The Ludlam Trail Corridor is located in south Miami-Dade County and runs in the north-south direction between SW 72nd Avenue and SW 67th Avenue/Ludlam Road. The length of the trail is approximately 6.2 miles and transvers several main east-west streets such as SR 968/Flagler Street, SR 90/SW 8th Street, SW 24th Street/Coral Way Road, SR 976/SW 40th Street/Bird Road, SW 56th Street/Miller Drive, SW 64th Street/Hardee Drive, and SR 968/SW 72nd Street/Sunset Drive.

Several traffic studies have identified the Ludlam Trail Corridor as a significant opportunity for a regional greenway that links the Miami International Airport area and Downtown Kendall/Dadeland Mall. **Figure 1** depicts the location of the Ludlam Trail Corridor.

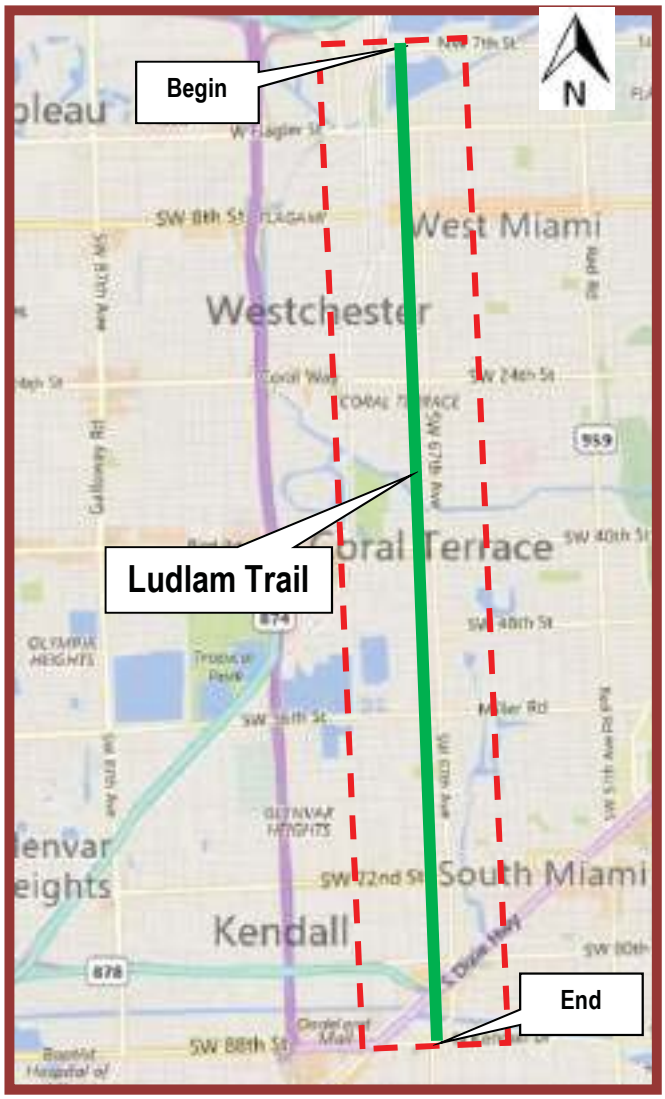

Figure 1: Location of Ludlam Trail Corridor

2.0 Crash Analysis

A generalized analysis of historical crash data was performed for the Ludlam Trail Corridor. Crash data from the latest available five-year period from January 2013 to December 2017 was analyzed. The crash data was extracted from the Signal Four Analytics database, which is an interactive, web-based system developed by the University of Florida. Using the crash data obtained from Signal Four Analytics database, crash summaries were developed for the five-year analysis period. Review of the crash summaries provides insight into the historical crash patterns along the corridor. Please note that the crash analysis consisted on analyzing crashes reported at the streets and avenues intersecting the trail with a half-mile buffer from the trail alignment.

Based on the crash data reviewed, a total of 7,342 crashes were documented in the vicinity of the study corridor during the study period. A total of 1,167 crashes were reported in 2013, 1,538 crashes in 2014, 1,588 crashes in 2015, 1,458 crashes in 2016, and 1,591 crashes in 2017. The crash summaries are included in **Appendix A.**

Based on crash severity of the 7,342 crashes reported, 1,049 (14.3%) were injury type crashes, 6,282 (85.6%) were property damage only crashes and 11 fatal crashes were reported. There were a total of 1,810 (24.7%) dark/dusk/dawn crashes reported. A total of 817 (11.1%) of the total crashes reported occurred under wet/slippery pavement conditions. A total of 37 (0.5 %) pedestrian crashes and 29 (0.4%) bicycle crash were reported in the vicinity of the Ludlam Trail Corridor during the study period. One of the reported pedestrian crashes resulted in a fatality. The predominant crash types reported in the vicinity of the corridor were rear-end (38.5%) followed by angle (17.8%). **Figures 2** shows the crash distribution by severity and **Figure 3** shows the crash distribution by type.

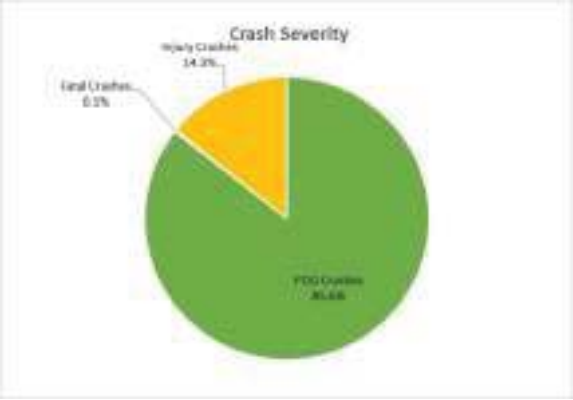

Figure 2: Crash Summary by Severity

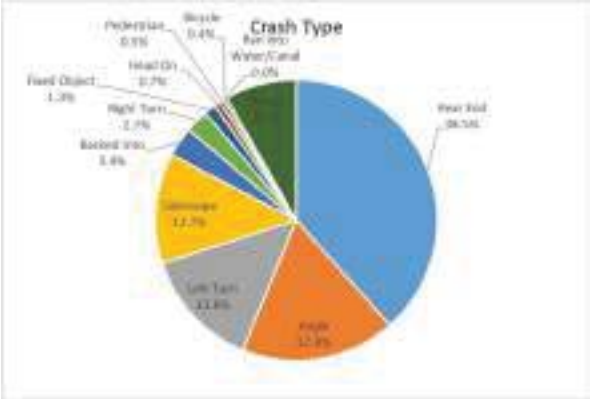

Figure 3: Crash Summary by Type

A summary of crashes by type, severity, light and surface conditions for the study corridor is presented in **Table 1.**

Table 1: Crash Summary

Ludlam Trail Corridor from SW 80 Street to NW 7 Street		Number of Crashes Year					5 Year Total Crashes	Mean Crashes Per Year	%
		2013	2014	2015	2016	2017			
CRASH TYPE	Rear End	389	607	617	605	606	2824	565	38.5%
	Head On	8	13	17	3	14	55	11	0.7%
	Angle	167	283	280	266	308	1304	261	17.8%
	Left Turn	136	229	241	203	205	1014	203	13.8%
	Right Turn	14	44	49	38	51	196	39	2.7%
	Sideswipe	114	197	209	190	219	929	186	12.7%
	Backed Into	28	60	49	55	61	253	51	3.4%
	Pedestrian	8	5	10	6	8	37	7	0.5%
	Bicycle	3	5	9	5	7	29	6	0.4%
	Fixed Object	*14*	*17*	*17*	*19*	*30*	*97*	*19*	*1.3%*
	Impact Attenuator/Crash Cushion	0	0	0	0	1	1	0	0.0%
	Bridge Overhead Structure	0	0	0	0	0	0	0	0.0%
	Bridge Pier or Support	0	0	0	0	0	0	0	0.0%
	Bridge Rail	0	0	0	1	1	2	0	0.0%
	Culvert	0	0	0	0	0	0	0	0.0%
	Curb	2	1	4	5	2	14	3	0.2%
	Ditch	0	0	0	0	0	0	0	0.0%
	Embankment	0	0	0	0	0	0	0	0.0%
	Guardrail Face	1	2	1	0	0	4	1	0.1%
	Guardrail End	0	1	0	0	2	3	1	0.0%
	Cable Barrier	0	0	0	0	0	0	0	0.0%
	Concrete Traffic Barrier	0	0	1	0	2	3	1	0.0%
	Other Traffic Barrier	1	0	1	0	0	2	0	0.0%
	Tree (Standing)	3	2	1	4	11	21	4	0.3%
	Utility Pole/Light Support	3	3	6	3	1	16	3	0.2%
	Traffic Sign Support	1	0	0	1	1	3	1	0.0%
	Traffic Signal Support	0	1	1	1	0	3	1	0.0%
	Other Post, Pole Or Support	1	4	1	0	0	6	1	0.1%
	Fence	0	1	1	0	2	4	1	0.1%
	Mailbox	0	0	0	0	1	1	0	0.0%
	Other Fixed Object	2	2	0	4	6	14	3	0.2%
	Other Non Fixed Object Collisions	*28*	*36*	*42*	*38*	*39*	*183*	*37*	*2.5%*
	Railway Vehicle (Train, Engine)	0	0	0	0	0	0	0	0.0%
	Animal	1	2	2	1	0	6	1	0.1%
	Motor Vehicle in Transport	0	0	0	0	0	0	0	0.0%
	Parked Motor Vehicle	26	33	36	34	37	166	33	2.3%
	Work Zone/Maintenance Equip.	0	0	0	0	0	0	0	0.0%
	Struck by Falling/Shifting Cargo	0	0	1	0	0	1	0	0.0%
	Other Non-Fixed Object	1	1	3	3	2	10	2	0.1%
	Non-Collisions	*12*	*7*	*12*	*8*	*8*	*47*	*9*	*0.6%*
	Overturn/Rollover	10	4	9	3	5	31	6	0.4%
	Fire/Explosion	0	0	0	0	0	0	0	0.0%
	Immersion	0	0	0	0	0	0	0	0.0%
	Jackknife	0	0	0	0	0	0	0	0.0%
	Cargo/Equipment Loss or Shift	0	0	0	0	0	0	0	0.0%
	Fell/Jumped from Motor Vehicle	0	0	1	3	1	5	1	0.1%
	Thrown or Falling Object	0	0	1	1	1	3	1	0.0%
	Ran into Water/Canal	0	0	0	0	0	0	0	0.0%
	Other Non-Collision	2	3	1	1	1	8	2	0.1%
	Others	246	35	36	22	35	374	75	5.1%
	Total Crashes	**1167**	**1538**	**1588**	**1458**	**1591**	**7342**	**1468**	**100.0%**
SEVERITY	PDO Crashes	961	1318	1347	1283	1373	6282	1256	85.6%
	Fatal Crashes	3	1	2	3	2	11	2	0.1%
	Injury Crashes	203	219	239	172	216	1049	210	14.3%
LIGHTING CONDITIONS	Daylight	707	1175	1219	1172	1259	5532	1106	75.3%
	Dusk	26	36	41	24	29	156	31	2.1%
	Dawn	9	17	7	11	10	54	11	0.7%
	Dark	173	280	312	246	290	1301	260	17.7%
	Unknown	252	30	9	5	3	299	60	4.1%
SURFACE CONDITIONS	Dry	777	1322	1405	1284	1451	6239	1248	85.0%
	Wet	140	190	176	173	138	817	163	11.1%
	Others	250	26	7	1	2	286	57	3.9%

2.1 Identification of Crash Clusters

Analysis of the crashes in the vicinity of the Ludlam Trail Corridor was conducted by graphically plotting the five-year crash data to identify locations with clusters of crashes. **Figure 4,** on the following page, graphically depicts the overall perspective of the clustering of crashes.

The top five locations with the highest concentration of crashes were observed at the following intersections:

- SW 67th Avenue and SR 976/SW 40th Street (333 crashes)
- SW 72nd Avenue and SR 968/Flagler Street (230 crashes)
- SW 72nd Avenue and SW 24th Street (227 crashes)
- SW 72nd Avenue and NW 7th Street (224 crashes)
- SW 72nd Avenue and SR 976/SW 40th Street (180 crashes)

Similarly, the top five segments with the highest concentration of crashes were the following

- SR 976/SW 40th Street between SW 73 Avenue and SW 65 Street (789 crashes)
- SW 24th Street between SW 74th Avenue and SW 67th Avenue (705 crashes)
- SR 968/Flagler Street between NW 72 Avenue and SW 67th Avenue (491 crashes)
- SR 90/SW 8th Street between SW 74th Avenue and SW 72 Avenue (246 crashes)
- SW 56th Street between SW 72nd Avenue and SW 67th Avenue (221 crashes)

A review of FDOT's 2015 High Crash List (HCL) indicates that the locations shown in **Table 2** were included in the 2015 HCL at the 99.99 confidence level.

Table 2: 2015 HCL Review

Location Type	Roadway Name	Locations on 2015 HCL
Spot	SR 968/Flagler Street	at NW 72nd Avenue (MP: 1.513)
Segment	SR 968/Flagler Street	from Tamiami Canal Road to SW 71st Avenue (MP:1.400 to 1.606)

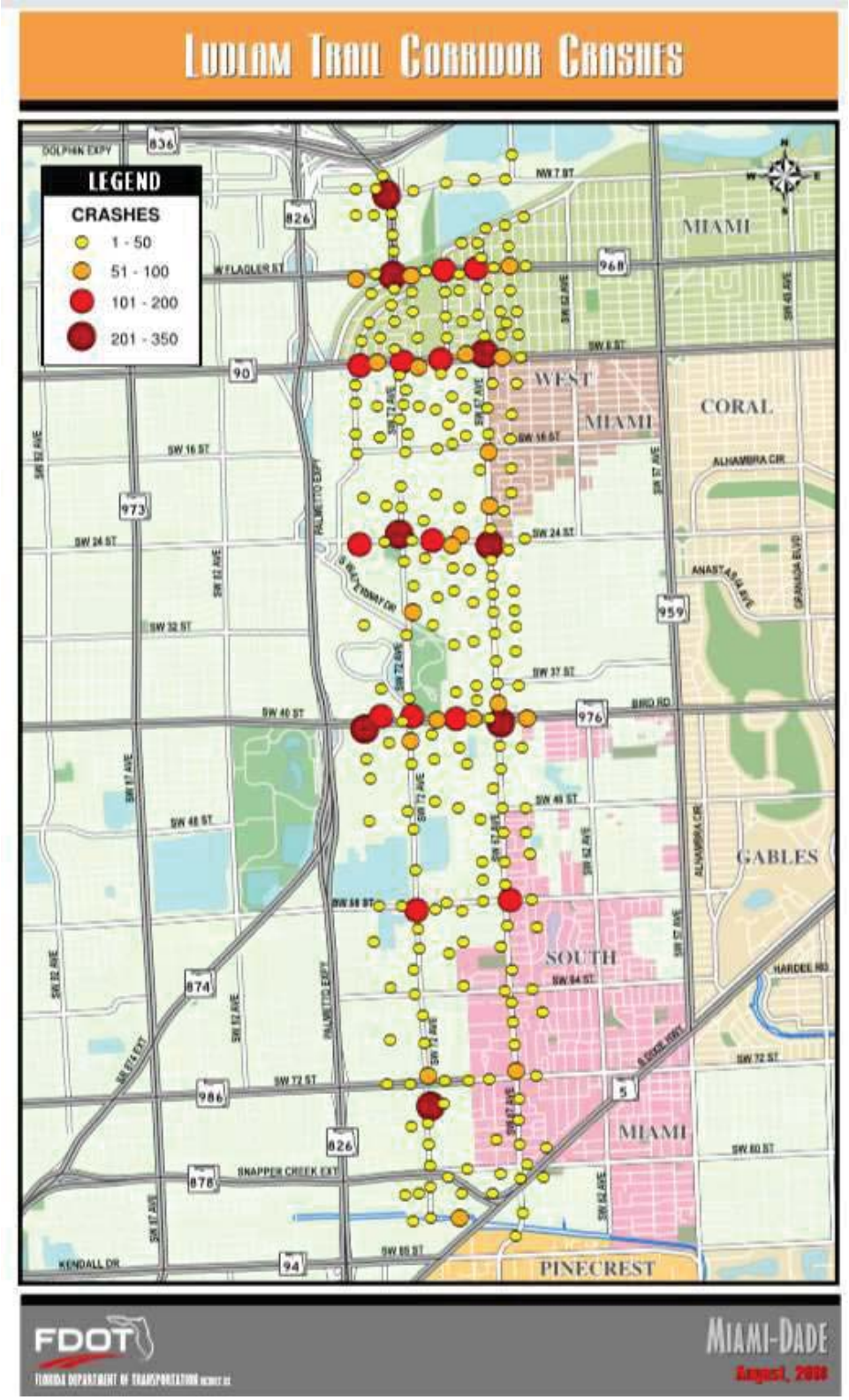

Figure 4: Clusters of All Crashes Types (2013-2017)

2.2 Pedestrian and Bicycle Crashes

A total of 37 pedestrian and 29 bicycle crashes were reported during the five-year analysis period in the vicinity of the trail. These crashes resulted in one pedestrian fatal crash. The fatal pedestrian crash occurred in 2013 at the intersection of SR 976/SW 40 Street and SW 65 Avenue. **Figure 5**, on the following page, graphically depicts the overall perspective of the clustering of pedestrian and bicycle crashes.

As shown in **Figure 5**, pedestrian and bicycle crashes were scattered within the vicinity of the study corridor. However, several pedestrian and bicycle crashes concentrated along the following roads:

- SR 968/Flagler Street between NW 65 Avenue and SW 72 Avenue (5 pedestrian and 2 bicycle crashes)
- SR 976/ SW 40 Street between NW 65 Avenue and SW 72 Avenue (5 pedestrian and 5 bicycle crashes)
- SW 24th Street between NW 65 Avenue and SW 72 Avenue (3 pedestrian and 2 bicycle crashes)

3.0 Comparison of Crash Statistics from Similar Pedestrian/Bicycle Trails

The crash statistics derived for the Ludlam Trail Corridor were compared to the crash statistics of two comparable pedestrian/bicycle trails. The trails selected for comparison were the Fred Marquis Pinellas Trail located in Pinellas County, and the M-path located in Miami Dade County. The crash data for the comparable trails was obtained for the latest available five-year period (i.e., 2013 to 2017). The results of the comparison are summarized in **Table 3**. Please note that this is a cursory comparison of crash statistics to give an overall prospective of crash frequency on similar sites and the transferability of crashes among the corridors must be considered when reviewing the information presented in Table 3.

Table 3: Summary of Crash Statistics for Trail Corridors

Location	Characteristics	Crash Statistics (5-year period)
Ludlam Trail Corridor	Length: 6.2 miles Urban Multi-use path Location: Miami-Dade County	- Total number of crashes:7,342 - Total number of injury crashes: 1,049 - Total number of fatal crashes: 11 - Total number of PDO* crashes: 6,282 - Ped & bike crashes: 66 - Crash frequency all crashes**: 1,468.4 crashes per year or 236.7 crashes per year per mile - Crash frequency ped & bike crashes: 13.2 crashes per year or **2.19** crashes per year per mile
Fred Marquis Pinellas Trail	Length: 35 miles Urban Multi-use path Location: Pinellas County	- Total number of crashes:3,836 - Total number of injury crashes: 1,517 - Total number of fatal crashes: 25 - Total number of PDO crashes: 2,294 - Ped & bike crashes: 1,249 - Crash frequency all crashes: 767.2 crashes per year or 21.9 crashes per year per mile - Crash frequency ped & bike crashes: 249.8 crashes per year or **7.13** crashes per year per mile
M-Path	Length: 10.5 miles Urban Multi-use path Location: Miami-Dade County	- Total number of crashes:5,880 - Total number of injury crashes: 1,201 - Total number of fatal crashes: 13 - Total number of PDO crashes: 4,666 - Ped & bike crashes: 1,024 - Crash frequency all crashes: 1,176 crashes per year or 112 crashes per year per mile - Crash frequency ped & bike crashes: 204.8 crashes per year or **19.5** crashes per year per mile

Notes: * PDO: Property Damage Only. **Total number of crashes divided by total number of years.

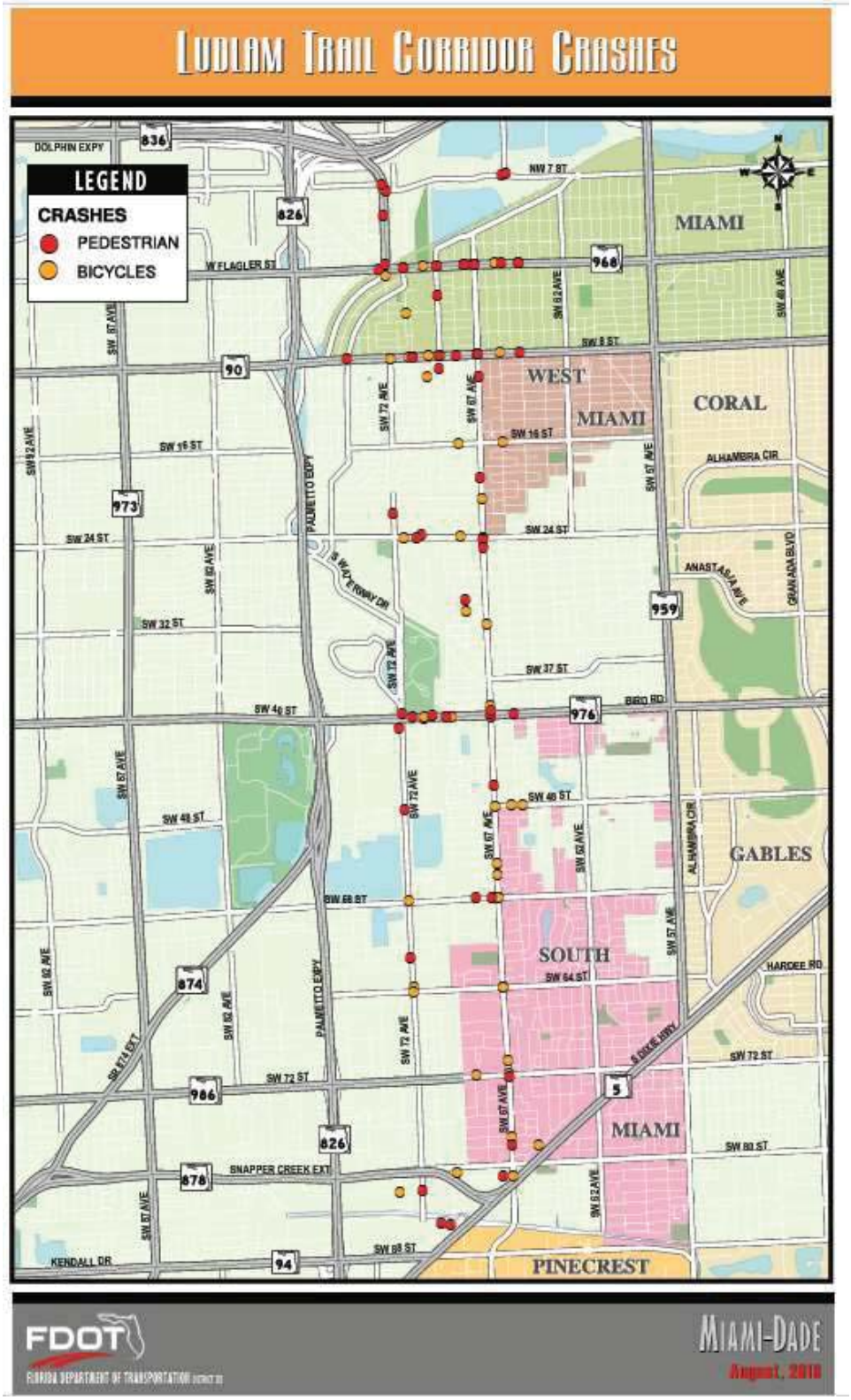

Figure 5: Clusters of Crashes - Pedestrian and Bicycle (2013-2017)

4.0 Findings and Recommendations

Based on the crash analysis performed, the following findings are presented:

- A total of 7,342 crashes were documented in the vicinity of the study corridor. A total of 37 pedestrian crashes and 29 bicycle crash were reported in the vicinity of the Ludlam Trail Corridor during the study period. One of the reported pedestrian crashes resulted in a fatality. The predominant crash types reported in the vicinity of the corridor were rear-end and angle crashes.

- The top five spots with the highest concentration of crashes were the following intersections:
  - SW 67th Avenue and SR 976/SW 40th Street (333 crashes)
  - SW 72nd Avenue and SR 968/Flagler Street (230 crashes)
  - SW 72nd Avenue and SW 24th Street (227 crashes)
  - SW 72nd Avenue and NW 7th Street (224 crashes)
  - SW 72nd Avenue and SR 976/SW 40th Street (180 crashes)

- The top five segments with the highest concentration of crashes were the following:
  - SR 976/SW 40th Street between SW 73rd Avenue and SW 65th Street (789 crashes)
  - SW 24th Street between SW 74th Avenue and SW 67th Avenue (705 crashes)
  - SR 968/Flagler Street between NW 72nd Avenue and SW 67th Avenue (491 crashes)
  - SR 90/SW 8th Street between SW 74th Avenue and SW 72nd Avenue (246 crashes)
  - SW 56th Street between SW 72nd Avenue and SW 67th Avenue (221 crashes)

- Pedestrian and bicycle crashes were spread in the vicinity of the study corridor. However, several pedestrian and bicycle crashes concentrated along the following roads:

  - SR 968/Flagler Street between NW 65th Avenue and SW 72nd Avenue (5 pedestrian and 2 bicycle crashes)
  - SR 976/SW 40th Street between NW 65th Avenue and SW 72nd Avenue (5 pedestrian and 5 bicycle crashes)
  - SW 24th Street between NW 65th Avenue and SW 72nd Avenue (3 pedestrian and 2 bicycle crashes)

- The crash statistics obtained from the Ludlam Trail Corridor were compared to the crash statistics from two comparable pedestrian/bicycle trails. Fred Marquis Pinellas Trail has a ped & bike crash frequency of 7.13 crashes per year per mile and the M-Path has a ped & bike crash frequency of 19.5 crashes per year per mile, whereas the Ludlam Trail Corridor has a frequency of 2.19 crashes per year per mile.

The following recommendations are suggested:

- Review previous safety studies conducted by the Florida Department of Transportation (FDOT) at the intersections with the Ludlam Trail Corridor.

- Review hard copy police reports of the pedestrian and bicycle crashes to determine if there are any potential trends and probable causes for their occurrence.

- Other safety enhancements to mitigate pedestrian and bicycle crashes include:

  - Contact FDOT's Community Traffic Safety Team Coordinator to discuss opportunities to implement a safe route to school program.

- Consider the installation of striped crosswalks.
- Consider the installation of safety bollards were warranted.
- Consider the installation of pedestrian push-buttons at signalized intersections were warranted.
- Provide adequate warning signs to proactively warn motorists of the pedestrian activity.

Appendix A
Corridor Crash Summaries

CRASH HISTOGRAMS

Ludlam Trail Corridor from SW 80 Street to NW 7 Street

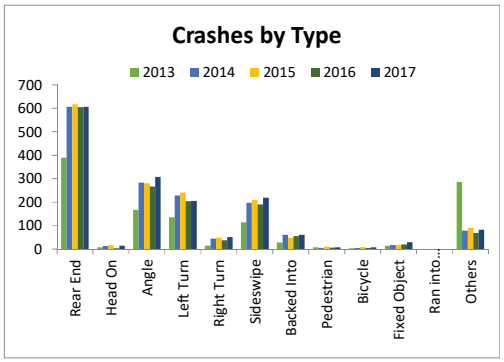

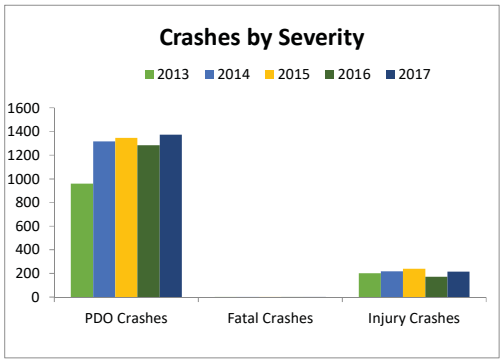

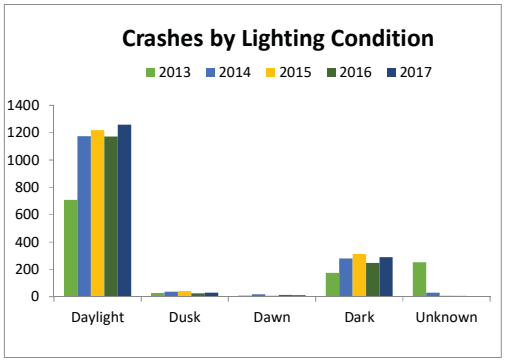

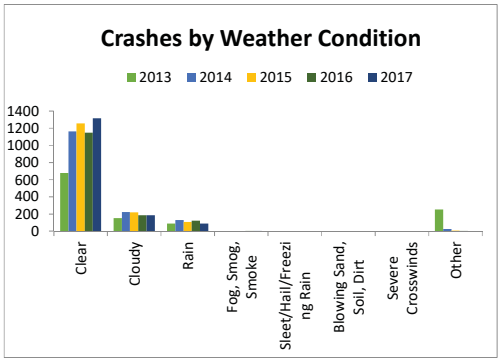

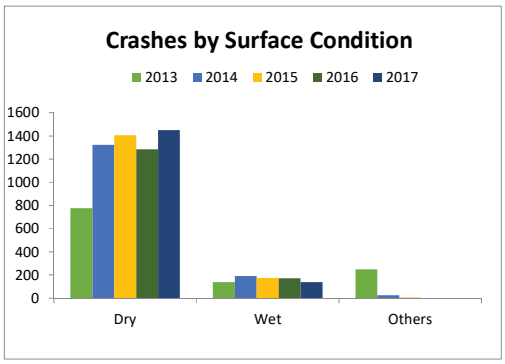

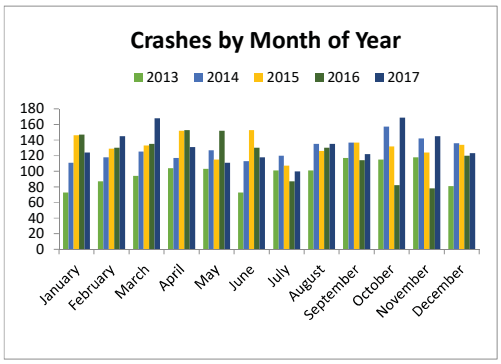

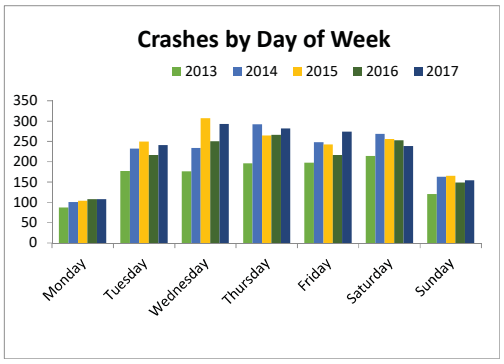

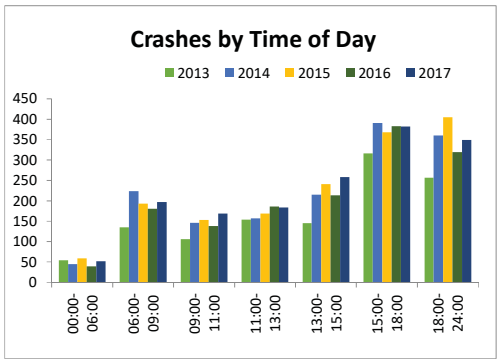

State of Florida Department of Transportation
CRASH SUMMARY

SECTION: Ludlam Trail Corridor f — STATE ROUTE: #N/A
ROADWAY LIMITS: 0 — M.P. 0.000 TO 0.000 — ENGINEER: 0
STUDY PERIOD: FROM 1/ 2013 TO 12/ 2013 — COUNTY: Miami-Dade

No.	MILE POST	DATE	DAY	TIME	CRASH TYPE	FATAL	INJURIES	PROP DAM	DAY / NIGHT	WET / DRY	CONTRIBUTING CAUSE (VEHICLE ONLY)
1	0.000	01/01/13	Wed	1904	Angle	0	0	1	Night	Dry	Not Coded
2	0.000	01/02/13	Thu	1310	Not Coded	0	0	1	Unknown	Other	Not Coded
3	0.000	01/03/13	Fri	1523	Sideswipe	0	0	1	Day	Dry	Not Coded
4	0.000	01/03/13	Fri	2056	Left-Turn	0	0	1	Night	Dry	Not Coded
5	0.000	01/03/13	Fri	1728	Angle	0	0	1	Night	Dry	Not Coded
6	0.000	01/03/13	Fri	1040	Rear-End	0	0	1	Day	Dry	Not Coded
7	0.000	01/04/13	Sat	0050	Left-Turn	0	1	0	Night	Dry	Not Coded
8	0.000	01/04/13	Sat	1420	Not Coded	0	0	1	Unknown	Other	Not Coded
9	0.000	01/04/13	Sat	0059	Rear-End	0	0	1	Day	Dry	Not Coded
10	0.000	01/07/13	Tue	0910	Angle	0	0	1	Day	Dry	Not Coded
11	0.000	01/07/13	Tue	0945	Left-Turn	0	0	1	Day	Dry	Not Coded
12	0.000	01/08/13	Wed	0500	Not Coded	0	0	1	Unknown	Other	Not Coded
13	0.000	01/08/13	Wed	1010	Rear-End	0	0	1	Day	Dry	Not Coded
14	0.000	01/08/13	Wed	1618	Not Coded	0	0	1	Unknown	Other	Not Coded
15	0.000	01/08/13	Wed	1850	Sideswipe	0	0	1	Night	Dry	Not Coded
16	0.000	01/09/13	Thu	2339	Rear-End	0	0	1	Night	Dry	Not Coded
17	0.000	01/09/13	Thu	1255	Rear-End	0	0	1	Day	Dry	Not Coded
18	0.000	01/09/13	Thu	1450	Not Coded	0	0	1	Unknown	Other	Not Coded
19	0.000	01/09/13	Thu	1242	Not Coded	0	0	1	Unknown	Other	Not Coded
20	0.000	01/09/13	Thu	0555	Not Coded	0	0	1	Unknown	Other	Not Coded
21	0.000	01/10/13	Fri	0950	Parked Motor Vehicle	0	1	0	Day	Dry	Not Coded
22	0.000	01/10/13	Fri	1010	Sideswipe	0	0	1	Night	Dry	Not Coded
23	0.000	01/10/13	Fri	0350	Angle	0	0	1	Day	Dry	Not Coded
24	0.000	01/11/13	Sat	1540	Rear-End	0	1	0	Day	Dry	Not Coded
25	0.000	01/11/13	Sat	1320	Sideswipe	0	0	1	Day	Dry	Not Coded
26	0.000	01/11/13	Sat	1429	Not Coded	0	0	1	Unknown	Other	Not Coded
27	0.000	01/12/13	Sun	0151	Pedestrian	0	1	0	Day	Dry	Not Coded
28	0.000	01/14/13	Tue	1440	Rear-End	0	0	1	Day	Dry	Not Coded
29	0.000	01/14/13	Tue	1720	Left-Turn	0	0	1	Day	Dry	Not Coded
30	0.000	01/16/13	Thu	0905	Rear-End	0	0	1	Day	Dry	Not Coded
31	0.000	01/16/13	Thu	1605	Not Coded	0	0	1	Unknown	Other	Not Coded
32	0.000	01/17/13	Fri	1305	Rear-End	0	0	1	Day	Wet	Not Coded
33	0.000	01/17/13	Fri	1904	Not Coded	0	0	1	Unknown	Other	Not Coded
34	0.000	01/17/13	Fri	1340	Angle	0	0	1	Day	Wet	Not Coded
35	0.000	01/17/13	Fri	1236	Not Coded	0	0	1	Unknown	Other	Not Coded
36	0.000	01/17/13	Fri	1150	Not Coded	0	0	1	Unknown	Other	Not Coded
37	0.000	01/17/13	Fri	1140	Parked Motor Vehicle	0	0	1	Day	Dry	Not Coded
38	0.000	01/17/13	Fri	0800	Not Coded	0	0	1	Unknown	Other	Not Coded
39	0.000	01/17/13	Fri	0633	Not Coded	0	0	1	Unknown	Other	Not Coded
40	0.000	01/17/13	Fri	1550	Rear-End	0	1	0	Day	Wet	Not Coded
41	0.000	01/17/13	Fri	1215	Not Coded	0	0	1	Unknown	Other	Not Coded
42	0.000	01/17/13	Fri	1654	Not Coded	0	0	1	Unknown	Other	Not Coded
43	0.000	01/17/13	Fri	2015	Tree (Standing)	0	0	1	Night	Dry	Not Coded
44	0.000	01/18/13	Sat	1047	Not Coded	0	0	1	Unknown	Other	Not Coded
45	0.000	01/18/13	Sat	0605	Angle	0	0	1	Night	Dry	Not Coded
46	0.000	01/18/13	Sat	0900	Not Coded	0	0	1	Unknown	Other	Not Coded
47	0.000	01/18/13	Sat	1415	Not Coded	0	0	1	Unknown	Other	Not Coded
48	0.000	01/18/13	Sat	2202	Left-Turn	0	1	0	Night	Dry	Not Coded
49	0.000	01/19/13	Sun	2017	Right-Turn	0	0	1	Night	Dry	Not Coded
50	0.000	01/19/13	Sun	0305	Parked Motor Vehicle	0	0	1	Night	Wet	Not Coded
51	0.000	01/19/13	Sun	1700	Not Coded	0	0	1	Unknown	Other	Not Coded
52	0.000	01/22/13	Wed	0825	Not Coded	0	0	1	Unknown	Other	Not Coded
53	0.000	01/23/13	Thu	0800	Left-Turn	0	1	0	Day	Dry	Not Coded
54	0.000	01/23/13	Thu	1541	Rear-End	0	0	1	Day	Dry	Not Coded
55	0.000	01/23/13	Thu	0940	Not Coded	0	0	1	Unknown	Other	Not Coded
56	0.000	01/24/13	Fri	0820	Rear-End	0	0	1	Day	Dry	Not Coded
57	0.000	01/24/13	Fri	1320	Not Coded	0	0	1	Unknown	Other	Not Coded
58	0.000	01/25/13	Sat	1441	Rear-End	0	0	1	Day	Dry	Not Coded
59	0.000	01/25/13	Sat	2011	Not Coded	0	0	1	Unknown	Other	Not Coded
60	0.000	01/26/13	Sun	1400	Rear-End	0	0	1	Day	Dry	Not Coded
61	0.000	01/27/13	Mon	1310	Left-Turn	0	1	0	Day	Dry	Not Coded
62	0.000	01/28/13	Tue	1730	Rear-End	0	0	1	Day	Dry	Not Coded
63	0.000	01/28/13	Tue	1230	Rear-End	0	0	1	Day	Dry	Not Coded
64	0.000	01/29/13	Wed	1740	Right-Turn	0	0	1	Day	Dry	Not Coded
65	0.000	01/29/13	Wed	0938	Rear-End	0	0	1	Day	Dry	Not Coded
66	0.000	01/29/13	Wed	1608	Not Coded	0	0	1	Unknown	Other	Not Coded
67	0.000	01/30/13	Thu	1915	Angle	0	0	1	Night	Dry	Not Coded
68	0.000	01/30/13	Thu	1214	Angle	0	1	0	Day	Dry	Not Coded
69	0.000	01/30/13	Thu	1817	Sideswipe	0	0	1	Night	Dry	Not Coded

State of Florida Department of Transportation
CRASH SUMMARY

SECTION: Ludlam Trail Corridor f — STATE ROUTE: #N/A
ROADWAY LIMITS: 0 — M.P. 0.000 TO 0.000 — ENGINEER: 0
STUDY PERIOD: FROM 1/ 2013 TO 12/ 2013 — COUNTY: Miami-Dade

No.	MILE POST	DATE	DAY	TIME	CRASH TYPE	FATAL	INJURIES	PROP DAM	DAY / NIGHT	WET / DRY	CONTRIBUTING CAUSE (VEHICLE ONLY)
70	0.000	01/30/13	Thu	1158	Not Coded	0	0	1	Unknown	Other	Not Coded
71	0.000	01/31/13	Fri	0630	Rear-End	0	1	0	Night	Dry	Not Coded
72	0.000	01/31/13	Fri	1625	Rear-End	0	0	1	Day	Dry	Not Coded
73	0.000	01/31/13	Fri	1845	Not Coded	0	0	1	Unknown	Other	Not Coded
74	0.000	02/01/13	Sat	1530	Not Coded	0	0	1	Unknown	Other	Not Coded
75	0.000	02/02/13	Sun	1319	Sideswipe	0	0	1	Day	Dry	Not Coded
76	0.000	02/02/13	Sun	0451	Rear-End	0	1	0	Night	Dry	Not Coded
77	0.000	02/02/13	Sun	1153	Left-Turn	0	0	1	Day	Dry	Not Coded
78	0.000	02/02/13	Sun	2038	Left-Turn	0	0	1	Night	Dry	Not Coded
79	0.000	02/03/13	Mon	0850	Angle	0	0	1	Day	Dry	Not Coded
80	0.000	02/04/13	Tue	0645	Rear-End	0	0	1	Day	Dry	Not Coded
81	0.000	02/04/13	Tue	2037	Angle	0	0	1	Night	Dry	Not Coded
82	0.000	02/05/13	Wed	1500	Not Coded	0	0	1	Unknown	Other	Not Coded
83	0.000	02/06/13	Thu	0844	Not Coded	0	0	1	Unknown	Other	Not Coded
84	0.000	02/06/13	Thu	1323	Not Coded	0	0	1	Unknown	Other	Not Coded
85	0.000	02/07/13	Fri	1300	Not Coded	0	0	1	Unknown	Other	Not Coded
86	0.000	02/07/13	Fri	1255	Rear-End	0	0	1	Day	Dry	Not Coded
87	0.000	02/07/13	Fri	1930	Angle	0	0	1	Night	Dry	Not Coded
88	0.000	02/07/13	Fri	1350	Left-Turn	0	0	1	Day	Dry	Not Coded
89	0.000	02/07/13	Fri	0800	Rear-End	0	0	1	Day	Dry	Not Coded
90	0.000	02/08/13	Sat	0940	Left-Turn	0	0	1	Day	Dry	Not Coded
91	0.000	02/08/13	Sat	1958	Angle	0	0	1	Night	Dry	Not Coded
92	0.000	02/09/13	Sun	1942	Rear-End	0	1	0	Night	Dry	Not Coded
93	0.000	02/09/13	Sun	1014	Rear-End	0	0	1	Day	Dry	Not Coded
94	0.000	02/09/13	Sun	1607	Not Coded	0	0	1	Unknown	Other	Not Coded
95	0.000	02/09/13	Sun	0221	Angle	0	0	1	Night	Dry	Not Coded
96	0.000	02/09/13	Sun	1715	Angle	0	1	0	Night	Dry	Not Coded
97	0.000	02/10/13	Mon	1241	Rear-End	0	0	1	Day	Dry	Not Coded
98	0.000	02/10/13	Mon	1550	Left-Turn	0	0	1	Day	Dry	Not Coded
99	0.000	02/10/13	Mon	2132	Left-Turn	0	1	0	Night	Dry	Not Coded
100	0.000	02/11/13	Tue	1636	Angle	0	0	1	Unknown	Other	Not Coded
101	0.000	02/11/13	Tue	1459	Sideswipe	0	0	1	Day	Dry	Not Coded
102	0.000	02/11/13	Tue	0502	Other Non-Fixed Object	0	0	1	Night	Dry	Not Coded
103	0.000	02/12/13	Wed	1147	Angle	0	1	0	Day	Dry	Not Coded
104	0.000	02/12/13	Wed	2225	Angle	0	1	0	Night	Dry	Not Coded
105	0.000	02/13/13	Thu	1015	Left-Turn	0	0	1	Day	Dry	Not Coded
106	0.000	02/13/13	Thu	1045	Rear-End	0	1	0	Day	Dry	Not Coded
107	0.000	02/13/13	Thu	1050	Not Coded	0	0	1	Unknown	Other	Not Coded
108	0.000	02/13/13	Thu	0939	Rear-End	0	0	1	Day	Dry	Not Coded
109	0.000	02/14/13	Fri	1250	Angle	0	0	1	Day	Dry	Not Coded
110	0.000	02/14/13	Fri	1110	Sideswipe	0	0	1	Day	Dry	Not Coded
111	0.000	02/14/13	Fri	1318	Left-Turn	0	1	0	Day	Dry	Not Coded
112	0.000	02/14/13	Fri	1227	Sideswipe	0	0	1	Day	Dry	Not Coded
113	0.000	02/14/13	Fri	0643	Not Coded	0	0	1	Unknown	Other	Not Coded
114	0.000	02/14/13	Fri	0745	Rear-End	0	1	0	Day	Dry	Not Coded
115	0.000	02/14/13	Fri	0947	Not Coded	0	0	1	Unknown	Other	Not Coded
116	0.000	02/15/13	Sat	2000	Rear-End	0	0	1	Night	Dry	Not Coded
117	0.000	02/15/13	Sat	0823	Angle	0	0	1	Day	Wet	Not Coded
118	0.000	02/15/13	Sat	0710	Rear-End	0	0	1	Day	Wet	Not Coded
119	0.000	02/15/13	Sat	1917	Rear-End	0	0	1	Night	Wet	Not Coded
120	0.000	02/15/13	Sat	2307	Left-Turn	0	0	1	Night	Wet	Not Coded
121	0.000	02/15/13	Sat	1625	Not Coded	0	0	1	Unknown	Other	Not Coded
122	0.000	02/15/13	Sat	1558	Rear-End	0	0	1	Day	Wet	Not Coded
123	0.000	02/15/13	Sat	2000	Sideswipe	0	0	1	Night	Wet	Not Coded
124	0.000	02/16/13	Sun	2018	Not Coded	0	0	1	Unknown	Other	Not Coded
125	0.000	02/16/13	Sun	1807	Not Coded	0	0	1	Unknown	Other	Not Coded
126	0.000	02/17/13	Mon	2106	Rear-End	0	0	1	Night	Dry	Not Coded
127	0.000	02/17/13	Mon	0129	Not Coded	0	0	1	Unknown	Other	Not Coded
128	0.000	02/18/13	Tue	1708	Angle	0	0	1	Day	Dry	Not Coded
129	0.000	02/18/13	Tue	0005	Angle	0	0	1	Night	Dry	Not Coded
130	0.000	02/19/13	Wed	1150	Not Coded	0	0	1	Unknown	Other	Not Coded
131	0.000	02/19/13	Wed	1110	Left-Turn	0	0	1	Day	Dry	Not Coded
132	0.000	02/20/13	Thu	1410	Not Coded	0	0	1	Unknown	Other	Not Coded
133	0.000	02/20/13	Thu	1700	Rear-End	0	1	0	Day	Dry	Not Coded
134	0.000	02/20/13	Thu	1655	Left-Turn	0	0	1	Day	Dry	Not Coded
135	0.000	02/20/13	Thu	1525	Angle	0	1	0	Day	Dry	Not Coded
136	0.000	02/21/13	Fri	0852	Not Coded	0	0	1	Unknown	Other	Not Coded
137	0.000	02/22/13	Sat	1857	Angle	0	0	1	Night	Dry	Not Coded
138	0.000	02/22/13	Sat	0911	Rear-End	0	0	1	Day	Dry	Not Coded

State of Florida Department of Transportation
CRASH SUMMARY

SECTION: Ludlam Trail Corridor f — STATE ROUTE: #N/A
ROADWAY LIMITS: 0 — M.P. 0.000 TO 0.000 — ENGINEER: 0
STUDY PERIOD: FROM 1/ 2013 TO 12/ 2013 — COUNTY: Miami-Dade

No.	MILE POST	DATE	DAY	TIME	CRASH TYPE	FATAL	INJURIES	PROP DAM	DAY / NIGHT	WET / DRY	CONTRIBUTING CAUSE (VEHICLE ONLY)
139	0.000	02/22/13	Sat	0905	Rear-End	0	1	0	Day	Dry	Not Coded
140	0.000	02/22/13	Sat	0815	Not Coded	0	0	1	Unknown	Other	Not Coded
141	0.000	02/23/13	Sun	1944	Not Coded	0	0	1	Unknown	Other	Not Coded
142	0.000	02/23/13	Sun	1245	Left-Turn	0	0	1	Day	Dry	Not Coded
143	0.000	02/24/13	Mon	0330	Not Coded	0	0	1	Unknown	Other	Not Coded
144	0.000	02/24/13	Mon	1733	Sideswipe	0	0	1	Day	Dry	Not Coded
145	0.000	02/25/13	Tue	1125	Angle	0	0	1	Day	Dry	Not Coded
146	0.000	02/25/13	Tue	0910	Sideswipe	0	0	1	Day	Dry	Not Coded
147	0.000	02/25/13	Tue	1712	Angle	0	0	1	Day	Dry	Not Coded
148	0.000	02/25/13	Tue	2105	Sideswipe	0	0	1	Night	Dry	Not Coded
149	0.000	02/25/13	Tue	1451	Not Coded	0	0	1	Unknown	Other	Not Coded
150	0.000	02/26/13	Wed	1647	Rear-End	0	0	1	Unknown	Other	Not Coded
151	0.000	02/26/13	Wed	1125	Left-Turn	0	0	1	Day	Dry	Not Coded
152	0.000	02/26/13	Wed	1115	Sideswipe	0	0	1	Day	Dry	Not Coded
153	0.000	02/26/13	Wed	1110	Rear-End	0	1	0	Day	Dry	Not Coded
154	0.000	02/26/13	Wed	2146	Not Coded	0	0	1	Unknown	Other	Not Coded
155	0.000	02/27/13	Thu	0859	Rear-End	0	0	1	Unknown	Other	Not Coded
156	0.000	02/28/13	Fri	1610	Sideswipe	0	0	1	Day	Dry	Not Coded
157	0.000	02/28/13	Fri	1336	Not Coded	0	0	1	Unknown	Other	Not Coded
158	0.000	02/28/13	Fri	1336	Not Coded	0	0	1	Unknown	Other	Not Coded
159	0.000	02/28/13	Fri	1919	Not Coded	0	0	1	Unknown	Other	Not Coded
160	0.000	02/28/13	Fri	1200	Left-Turn	0	0	1	Day	Dry	Not Coded
161	0.000	03/01/13	Sat	1808	Right-Turn	0	0	1	Night	Dry	Not Coded
162	0.000	03/01/13	Sat	1420	Backed Into	0	0	1	Day	Dry	Not Coded
163	0.000	03/01/13	Sat	0450	Rear-End	0	0	1	Night	Wet	Not Coded
164	0.000	03/01/13	Sat	1703	Angle	0	0	1	Day	Wet	Not Coded
165	0.000	03/01/13	Sat	1548	Angle	0	1	0	Day	Dry	Not Coded
166	0.000	03/01/13	Sat	1626	Not Coded	0	0	1	Unknown	Other	Not Coded
167	0.000	03/02/13	Sun	1938	Rear-End	0	1	0	Night	Dry	Not Coded
168	0.000	03/02/13	Sun	0300	Utility Pole/Light Support	0	1	0	Night	Dry	Not Coded
169	0.000	03/02/13	Sun	1450	Not Coded	0	0	1	Unknown	Other	Not Coded
170	0.000	03/03/13	Mon	1822	Not Coded	0	0	1	Unknown	Other	Not Coded
171	0.000	03/04/13	Tue	1504	Not Coded	0	0	1	Unknown	Other	Not Coded
172	0.000	03/05/13	Wed	1554	Not Coded	0	0	1	Unknown	Other	Not Coded
173	0.000	03/05/13	Wed	1815	Not Coded	0	0	1	Unknown	Other	Not Coded
174	0.000	03/05/13	Wed	1110	Rear-End	0	0	1	Day	Dry	Not Coded
175	0.000	03/05/13	Wed	1938	Rear-End	0	1	0	Night	Dry	Not Coded
176	0.000	03/06/13	Thu	1824	Rear-End	0	0	1	Unknown	Other	Not Coded
177	0.000	03/06/13	Thu	0937	Not Coded	0	0	1	Unknown	Other	Not Coded
178	0.000	03/07/13	Fri	1130	Rear-End	0	0	1	Day	Dry	Not Coded
179	0.000	03/07/13	Fri	1125	Head-On	0	0	1	Day	Dry	Not Coded
180	0.000	03/07/13	Fri	1729	Angle	0	0	1	Unknown	Other	Not Coded
181	0.000	03/07/13	Fri	1615	Rear-End	0	0	1	Day	Dry	Not Coded
182	0.000	03/07/13	Fri	1730	Not Coded	0	0	1	Unknown	Other	Not Coded
183	0.000	03/08/13	Sat	0750	Rear-End	0	0	1	Day	Dry	Not Coded
184	0.000	03/08/13	Sat	1731	Not Coded	0	0	1	Unknown	Other	Not Coded
185	0.000	03/09/13	Sun	1215	Not Coded	0	0	1	Unknown	Other	Not Coded
186	0.000	03/10/13	Mon	2119	Not Coded	0	0	1	Unknown	Other	Not Coded
187	0.000	03/10/13	Mon	1003	Parked Motor Vehicle	0	1	0	Day	Dry	Not Coded
188	0.000	03/11/13	Tue	1700	Rear-End	0	0	1	Day	Dry	Not Coded
189	0.000	03/11/13	Tue	1710	Angle	0	0	1	Day	Dry	Not Coded
190	0.000	03/11/13	Tue	1325	Rear-End	0	1	0	Day	Dry	Not Coded
191	0.000	03/12/13	Wed	0835	Not Coded	0	0	1	Unknown	Other	Not Coded
192	0.000	03/12/13	Wed	2034	Rear-End	0	0	1	Day	Dry	Not Coded
193	0.000	03/12/13	Wed	2000	Left-Turn	0	1	0	Night	Dry	Not Coded
194	0.000	03/12/13	Wed	1425	Angle	0	0	1	Day	Dry	Not Coded
195	0.000	03/12/13	Wed	1544	Not Coded	0	0	1	Unknown	Other	Not Coded
196	0.000	03/12/13	Wed	1414	Left-Turn	0	0	1	Day	Dry	Not Coded
197	0.000	03/13/13	Thu	1201	Not Coded	0	0	1	Unknown	Other	Not Coded
198	0.000	03/13/13	Thu	0855	Sideswipe	0	0	1	Day	Dry	Not Coded
199	0.000	03/13/13	Thu	1800	Not Coded	0	0	1	Unknown	Other	Not Coded
200	0.000	03/13/13	Thu	1828	Rear-End	0	0	1	Day	Dry	Not Coded
201	0.000	03/14/13	Fri	0245	Tree (Standing)	0	1	0	Night	Dry	Not Coded
202	0.000	03/14/13	Fri	1900	Traffic Sign Support	0	0	1	Day	Dry	Not Coded
203	0.000	03/14/13	Fri	2029	Rear-End	0	0	1	Unknown	Other	Not Coded
204	0.000	03/15/13	Sat	2145	Angle	0	0	1	Night	Dry	Not Coded
205	0.000	03/15/13	Sat	0855	Rear-End	0	1	0	Day	Dry	Not Coded
206	0.000	03/15/13	Sat	1908	Rear-End	0	0	1	Day	Dry	Not Coded
207	0.000	03/15/13	Sat	2049	Pedestrian	1	0	0	Night	Dry	Not Coded

State of Florida Department of Transportation
CRASH SUMMARY

SECTION: Ludlam Trail Corridor f — STATE ROUTE: #N/A
ROADWAY LIMITS: 0 — M.P. 0.000 TO 0.000 — ENGINEER: 0
STUDY PERIOD: FROM 1/ 2013 TO 12/ 2013 — COUNTY: Miami-Dade

No.	MILE POST	DATE	DAY	TIME	CRASH TYPE	FATAL	INJURIES	PROP DAM	DAY / NIGHT	WET / DRY	CONTRIBUTING CAUSE (VEHICLE ONLY)
208	0.000	03/15/13	Sat	1430	Pedalcycle	0	0	1	Day	Dry	Not Coded
209	0.000	03/15/13	Sat	0645	Not Coded	0	1	0	Unknown	Other	Not Coded
210	0.000	03/15/13	Sat	0831	Not Coded	0	0	1	Unknown	Other	Not Coded
211	0.000	03/15/13	Sat	1256	Rear-End	0	0	1	Day	Dry	Not Coded
212	0.000	03/15/13	Sat	1427	Angle	0	0	1	Unknown	Other	Not Coded
213	0.000	03/15/13	Sat	0951	Rear-End	0	0	1	Unknown	Other	Not Coded
214	0.000	03/15/13	Sat	1826	Not Coded	0	0	1	Unknown	Other	Not Coded
215	0.000	03/16/13	Sun	1734	Angle	0	0	1	Day	Dry	Not Coded
216	0.000	03/17/13	Mon	0348	Angle	0	0	1	Night	Dry	Not Coded
217	0.000	03/17/13	Mon	0806	Rear-End	0	1	0	Night	Dry	Not Coded
218	0.000	03/18/13	Tue	2000	Not Coded	0	0	1	Unknown	Other	Not Coded
219	0.000	03/18/13	Tue	1843	Not Coded	0	0	1	Unknown	Other	Not Coded
220	0.000	03/19/13	Wed	1315	Left-Turn	0	0	1	Day	Dry	Not Coded
221	0.000	03/19/13	Wed	0705	Left-Turn	0	0	1	Day	Wet	Not Coded
222	0.000	03/19/13	Wed	1600	Angle	0	0	1	Day	Dry	Not Coded
223	0.000	03/20/13	Thu	1453	Not Coded	0	0	1	Unknown	Other	Not Coded
224	0.000	03/20/13	Thu	1111	Sideswipe	0	0	1	Day	Dry	Not Coded
225	0.000	03/20/13	Thu	1906	Sideswipe	0	0	1	Day	Dry	Not Coded
226	0.000	03/20/13	Thu	1300	Rear-End	0	0	1	Day	Dry	Not Coded
227	0.000	03/20/13	Thu	2035	Not Coded	0	0	1	Unknown	Other	Not Coded
228	0.000	03/21/13	Fri	1450	Rear-End	0	0	1	Day	Dry	Not Coded
229	0.000	03/22/13	Sat	1210	Angle	0	0	1	Day	Dry	Not Coded
230	0.000	03/22/13	Sat	1300	Not Coded	0	0	1	Unknown	Other	Not Coded
231	0.000	03/23/13	Sun	2140	Not Coded	0	0	1	Unknown	Other	Not Coded
232	0.000	03/23/13	Sun	1354	Rear-End	0	0	1	Day	Dry	Not Coded
233	0.000	03/23/13	Sun	0133	Angle	0	0	1	Night	Dry	Not Coded
234	0.000	03/23/13	Sun	1520	Sideswipe	0	0	1	Day	Dry	Not Coded
235	0.000	03/24/13	Mon	1510	Backed Into	0	0	1	Day	Dry	Not Coded
236	0.000	03/25/13	Tue	1432	Angle	0	0	1	Unknown	Other	Not Coded
237	0.000	03/25/13	Tue	1805	Not Coded	0	0	1	Unknown	Other	Not Coded
238	0.000	03/25/13	Tue	2023	Not Coded	0	0	1	Unknown	Other	Not Coded
239	0.000	03/26/13	Wed	1625	Not Coded	0	0	1	Unknown	Other	Not Coded
240	0.000	03/26/13	Wed	1827	Rear-End	0	1	0	Day	Dry	Not Coded
241	0.000	03/26/13	Wed	1756	Not Coded	0	0	1	Unknown	Other	Not Coded
242	0.000	03/26/13	Wed	2118	Not Coded	0	0	1	Unknown	Other	Not Coded
243	0.000	03/26/13	Wed	1348	Rear-End	0	0	1	Day	Dry	Not Coded
244	0.000	03/27/13	Thu	1630	Not Coded	0	0	1	Unknown	Other	Not Coded
245	0.000	03/27/13	Thu	1950	Rear-End	0	0	1	Unknown	Other	Not Coded
246	0.000	03/27/13	Thu	1720	Not Coded	0	0	1	Unknown	Other	Not Coded
247	0.000	03/28/13	Fri	1755	Rear-End	0	0	1	Day	Dry	Not Coded
248	0.000	03/28/13	Fri	1500	Rear-End	0	1	0	Day	Dry	Not Coded
249	0.000	03/29/13	Sat	1500	Not Coded	0	0	1	Unknown	Other	Not Coded
250	0.000	03/29/13	Sat	2355	Rear-End	0	0	1	Night	Dry	Not Coded
251	0.000	03/29/13	Sat	1630	Rear-End	0	1	0	Day	Dry	Not Coded
252	0.000	03/30/13	Sun	1631	Rear-End	0	1	0	Day	Dry	Not Coded
253	0.000	03/30/13	Sun	0110	Angle	0	0	1	Night	Dry	Not Coded
254	0.000	03/31/13	Mon	1440	Not Coded	0	0	1	Unknown	Other	Not Coded
255	0.000	04/01/13	Tue	0903	Sideswipe	0	0	1	Day	Dry	Not Coded
256	0.000	04/01/13	Tue	1629	Not Coded	0	0	1	Unknown	Other	Not Coded
257	0.000	04/01/13	Tue	0930	Rear-End	0	0	1	Day	Dry	Not Coded
258	0.000	04/02/13	Wed	0825	Rear-End	0	0	1	Day	Dry	Not Coded
259	0.000	04/02/13	Wed	1905	Not Coded	0	0	1	Unknown	Other	Not Coded
260	0.000	04/02/13	Wed	1259	Not Coded	0	0	1	Unknown	Other	Not Coded
261	0.000	04/02/13	Wed	1232	Overturn/Rollover	0	0	1	Day	Dry	Not Coded
262	0.000	04/02/13	Wed	0830	Not Coded	0	0	1	Unknown	Other	Not Coded
263	0.000	04/02/13	Wed	1923	Not Coded	0	0	1	Unknown	Other	Not Coded
264	0.000	04/03/13	Thu	1139	Not Coded	0	0	1	Unknown	Other	Not Coded
265	0.000	04/03/13	Thu	1520	Left-Turn	0	0	1	Day	Dry	Not Coded
266	0.000	04/03/13	Thu	1204	Other Fixed Object	0	1	0	Day	Dry	Not Coded
267	0.000	04/03/13	Thu	0655	Rear-End	0	0	1	Day	Dry	Not Coded
268	0.000	04/03/13	Thu	1800	Angle	0	0	1	Day	Dry	Not Coded
269	0.000	04/03/13	Thu	1412	Not Coded	0	0	1	Unknown	Other	Not Coded
270	0.000	04/03/13	Thu	2046	Not Coded	0	0	1	Unknown	Other	Not Coded
271	0.000	04/04/13	Fri	1425	Rear-End	0	0	1	Day	Dry	Not Coded
272	0.000	04/04/13	Fri	1730	Not Coded	0	0	1	Unknown	Other	Not Coded
273	0.000	04/04/13	Fri	0801	Left-Turn	0	0	1	Day	Dry	Not Coded
274	0.000	04/05/13	Sat	0800	Left-Turn	0	0	1	Day	Wet	Not Coded
275	0.000	04/05/13	Sat	1645	Sideswipe	0	0	1	Day	Wet	Not Coded
276	0.000	04/05/13	Sat	1758	Left-Turn	0	1	0	Day	Wet	Not Coded

State of Florida Department of Transportation
CRASH SUMMARY

SECTION: Ludlam Trail Corridor f | STATE ROUTE: #N/A
ROADWAY LIMITS: 0 | M.P. 0.000 TO 0.000 | ENGINEER: 0
STUDY PERIOD: FROM 1/ 2013 TO 12/ 2013 | COUNTY: Miami-Dade

No.	MILE POST	DATE	DAY	TIME	CRASH TYPE	FATAL	INJURIES	PROP DAM	DAY / NIGHT	WET / DRY	CONTRIBUTING CAUSE (VEHICLE ONLY)
277	0.000	04/05/13	Sat	1200	Not Coded	0	0	1	Unknown	Other	Not Coded
278	0.000	04/06/13	Sun	1830	Not Coded	0	0	1	Unknown	Other	Not Coded
279	0.000	04/07/13	Mon	1000	Parked Motor Vehicle	0	0	1	Day	Dry	Not Coded
280	0.000	04/07/13	Mon	1143	Left-Turn	0	0	1	Day	Dry	Not Coded
281	0.000	04/08/13	Tue	0715	Left-Turn	0	1	0	Day	Dry	Not Coded
282	0.000	04/08/13	Tue	2105	Not Coded	0	0	1	Unknown	Other	Not Coded
283	0.000	04/08/13	Tue	1220	Head-On	0	0	1	Day	Dry	Not Coded
284	0.000	04/08/13	Tue	0820	Rear-End	0	0	1	Day	Dry	Not Coded
285	0.000	04/09/13	Wed	1415	Rear-End	0	0	1	Day	Dry	Not Coded
286	0.000	04/10/13	Thu	0808	Rear-End	0	1	0	Day	Dry	Not Coded
287	0.000	04/10/13	Thu	1435	Not Coded	0	0	1	Unknown	Other	Not Coded
288	0.000	04/10/13	Thu	2334	Rear-End	0	0	1	Unknown	Other	Not Coded
289	0.000	04/10/13	Thu	1944	Angle	0	1	0	Night	Dry	Not Coded
290	0.000	04/11/13	Fri	1900	Parked Motor Vehicle	0	1	0	Day	Dry	Not Coded
291	0.000	04/12/13	Sat	1616	Rear-End	0	0	1	Day	Dry	Not Coded
292	0.000	04/12/13	Sat	1622	Rear-End	0	1	0	Day	Dry	Not Coded
293	0.000	04/12/13	Sat	1250	Angle	0	1	0	Day	Dry	Not Coded
294	0.000	04/12/13	Sat	1208	Not Coded	0	0	1	Unknown	Other	Not Coded
295	0.000	04/12/13	Sat	1705	Rear-End	0	1	0	Day	Dry	Not Coded
296	0.000	04/13/13	Sun	1548	Not Coded	0	0	1	Unknown	Other	Not Coded
297	0.000	04/13/13	Sun	1328	Not Coded	0	0	1	Unknown	Other	Not Coded
298	0.000	04/13/13	Sun	1514	Left-Turn	0	1	0	Day	Dry	Not Coded
299	0.000	04/13/13	Sun	1510	Sideswipe	0	0	1	Day	Dry	Not Coded
300	0.000	04/13/13	Sun	1645	Rear-End	0	0	1	Day	Dry	Not Coded
301	0.000	04/14/13	Mon	1435	Rear-End	0	0	1	Unknown	Other	Not Coded
302	0.000	04/14/13	Mon	1255	Rear-End	0	0	1	Day	Dry	Not Coded
303	0.000	04/15/13	Tue	1034	Rear-End	0	1	0	Day	Wet	Not Coded
304	0.000	04/15/13	Tue	1715	Sideswipe	0	0	1	Day	Wet	Not Coded
305	0.000	04/15/13	Tue	1803	Rear-End	0	0	1	Day	Wet	Not Coded
306	0.000	04/15/13	Tue	1439	Not Coded	0	0	1	Unknown	Other	Not Coded
307	0.000	04/15/13	Tue	1758	Rear-End	0	0	1	Unknown	Other	Not Coded
308	0.000	04/15/13	Tue	0720	Rear-End	0	0	1	Day	Dry	Not Coded
309	0.000	04/15/13	Tue	1043	Rear-End	0	0	1	Day	Wet	Not Coded
310	0.000	04/15/13	Tue	1845	Not Coded	0	0	1	Unknown	Other	Not Coded
311	0.000	04/16/13	Wed	0900	Sideswipe	0	0	1	Day	Dry	Not Coded
312	0.000	04/16/13	Wed	1700	Not Coded	0	0	1	Unknown	Other	Not Coded
313	0.000	04/16/13	Wed	1038	Not Coded	0	0	1	Unknown	Other	Not Coded
314	0.000	04/16/13	Wed	1732	Not Coded	0	0	1	Unknown	Other	Not Coded
315	0.000	04/16/13	Wed	0805	Sideswipe	0	0	1	Day	Dry	Not Coded
316	0.000	04/17/13	Thu	2019	Not Coded	0	0	1	Unknown	Other	Not Coded
317	0.000	04/17/13	Thu	1522	Not Coded	0	0	1	Unknown	Other	Not Coded
318	0.000	04/17/13	Thu	1812	Rear-End	0	0	1	Night	Dry	Not Coded
319	0.000	04/17/13	Thu	1140	Head-On	0	1	0	Day	Dry	Not Coded
320	0.000	04/17/13	Thu	0655	Rear-End	0	1	0	Day	Dry	Not Coded
321	0.000	04/18/13	Fri	1510	Rear-End	0	0	1	Day	Dry	Not Coded
322	0.000	04/18/13	Fri	0820	Left-Turn	0	0	1	Day	Dry	Not Coded
323	0.000	04/18/13	Fri	1205	Not Coded	0	0	1	Unknown	Other	Not Coded
324	0.000	04/18/13	Fri	0942	Rear-End	0	1	0	Day	Dry	Not Coded
325	0.000	04/18/13	Fri	0925	Sideswipe	0	0	1	Day	Dry	Not Coded
326	0.000	04/19/13	Sat	1701	Rear-End	0	0	1	Day	Dry	Not Coded
327	0.000	04/19/13	Sat	1820	Rear-End	0	0	1	Day	Dry	Not Coded
328	0.000	04/20/13	Sun	2315	Rear-End	0	1	0	Night	Wet	Not Coded
329	0.000	04/22/13	Tue	1511	Not Coded	0	0	1	Unknown	Other	Not Coded
330	0.000	04/22/13	Tue	2207	Angle	0	0	1	Night	Wet	Not Coded
331	0.000	04/22/13	Tue	1415	Not Coded	0	0	1	Unknown	Other	Not Coded
332	0.000	04/22/13	Tue	2010	Not Coded	0	0	1	Unknown	Other	Not Coded
333	0.000	04/23/13	Wed	1730	Rear-End	0	0	1	Day	Dry	Not Coded
334	0.000	04/23/13	Wed	1700	Angle	0	0	1	Day	Dry	Not Coded
335	0.000	04/24/13	Thu	1905	Left-Turn	0	0	1	Day	Dry	Not Coded
336	0.000	04/24/13	Thu	1725	Backed Into	0	0	1	Day	Dry	Not Coded
337	0.000	04/24/13	Thu	0708	Sideswipe	0	0	1	Day	Dry	Not Coded
338	0.000	04/25/13	Fri	1700	Left-Turn	0	0	1	Day	Dry	Not Coded
339	0.000	04/25/13	Fri	1543	Not Coded	0	0	1	Unknown	Other	Not Coded
340	0.000	04/25/13	Fri	1035	Angle	0	1	0	Day	Dry	Not Coded
341	0.000	04/26/13	Sat	1613	Rear-End	0	0	1	Day	Dry	Not Coded
342	0.000	04/26/13	Sat	1022	Angle	0	0	1	Day	Dry	Not Coded
343	0.000	04/27/13	Sun	2125	Angle	0	1	0	Night	Dry	Not Coded
344	0.000	04/27/13	Sun	1240	Not Coded	0	0	1	Unknown	Other	Not Coded
345	0.000	04/27/13	Sun	0905	Not Coded	0	0	1	Unknown	Other	Not Coded

State of Florida Department of Transportation
CRASH SUMMARY

SECTION: Ludlam Trail Corridor f — STATE ROUTE: #N/A
ROADWAY LIMITS: 0 — M.P. 0.000 TO 0.000 — ENGINEER: 0
STUDY PERIOD: FROM 1/ 2013 TO 12/ 2013 — COUNTY: Miami-Dade

No.	MILE POST	DATE	DAY	TIME	CRASH TYPE	FATAL	INJURIES	PROP DAM	DAY / NIGHT	WET / DRY	CONTRIBUTING CAUSE (VEHICLE ONLY)
346	0.000	04/28/13	Mon	1555	Backed Into	0	0	1	Day	Dry	Not Coded
347	0.000	04/28/13	Mon	1244	Sideswipe	0	0	1	Day	Dry	Not Coded
348	0.000	04/28/13	Mon	0934	Not Coded	0	0	1	Unknown	Other	Not Coded
349	0.000	04/29/13	Tue	2100	Rear-End	0	0	1	Night	Dry	Not Coded
350	0.000	04/29/13	Tue	1005	Rear-End	0	0	1	Day	Dry	Not Coded
351	0.000	04/29/13	Tue	1154	Left-Turn	0	1	0	Day	Dry	Not Coded
352	0.000	04/29/13	Tue	2058	Sideswipe	0	0	1	Night	Wet	Not Coded
353	0.000	04/29/13	Tue	1906	Rear-End	0	0	1	Unknown	Other	Not Coded
354	0.000	04/29/13	Tue	1333	Not Coded	0	0	1	Unknown	Other	Not Coded
355	0.000	04/29/13	Tue	1030	Not Coded	0	0	1	Unknown	Other	Not Coded
356	0.000	04/30/13	Wed	1837	Not Coded	0	0	1	Unknown	Other	Not Coded
357	0.000	04/30/13	Wed	1720	Not Coded	0	0	1	Unknown	Other	Not Coded
358	0.000	04/30/13	Wed	0714	Rear-End	0	0	1	Day	Dry	Not Coded
359	0.000	05/01/13	Thu	0827	Not Coded	0	0	1	Unknown	Other	Not Coded
360	0.000	05/01/13	Thu	0632	Not Coded	0	0	1	Unknown	Other	Not Coded
361	0.000	05/01/13	Thu	0608	Sideswipe	0	0	1	Night	Dry	Not Coded
362	0.000	05/02/13	Fri	1040	Not Coded	0	0	1	Unknown	Other	Not Coded
363	0.000	05/03/13	Sat	1257	Not Coded	0	0	1	Unknown	Other	Not Coded
364	0.000	05/03/13	Sat	1128	Not Coded	0	0	1	Unknown	Other	Not Coded
365	0.000	05/03/13	Sat	1704	Not Coded	0	0	1	Unknown	Other	Not Coded
366	0.000	05/03/13	Sat	0715	Head-On	0	0	1	Day	Dry	Not Coded
367	0.000	05/03/13	Sat	1845	Left-Turn	0	0	1	Day	Dry	Not Coded
368	0.000	05/03/13	Sat	1715	Rear-End	0	0	1	Day	Wet	Not Coded
369	0.000	05/04/13	Sun	0425	Left-Turn	0	1	0	Night	Dry	Not Coded
370	0.000	05/06/13	Tue	2145	Left-Turn	0	0	1	Night	Dry	Not Coded
371	0.000	05/06/13	Tue	0826	Sideswipe	0	0	1	Unknown	Other	Not Coded
372	0.000	05/06/13	Tue	0843	Rear-End	0	0	1	Day	Dry	Not Coded
373	0.000	05/06/13	Tue	1558	Angle	0	1	0	Day	Dry	Not Coded
374	0.000	05/07/13	Wed	1045	Not Coded	0	0	1	Unknown	Other	Not Coded
375	0.000	05/07/13	Wed	1540	Rear-End	0	0	1	Unknown	Other	Not Coded
376	0.000	05/07/13	Wed	1410	Not Coded	0	0	1	Unknown	Other	Not Coded
377	0.000	05/07/13	Wed	1430	Sideswipe	0	0	1	Day	Dry	Not Coded
378	0.000	05/08/13	Thu	1733	Not Coded	0	0	1	Unknown	Other	Not Coded
379	0.000	05/08/13	Thu	0754	Rear-End	0	0	1	Day	Dry	Not Coded
380	0.000	05/08/13	Thu	1430	Left-Turn	0	0	1	Day	Dry	Not Coded
381	0.000	05/08/13	Thu	1202	Angle	0	1	0	Day	Dry	Not Coded
382	0.000	05/09/13	Fri	1825	Rear-End	0	0	1	Day	Dry	Not Coded
383	0.000	05/09/13	Fri	1805	Not Coded	0	0	1	Unknown	Other	Not Coded
384	0.000	05/10/13	Sat	1520	Sideswipe	0	0	1	Day	Dry	Not Coded
385	0.000	05/11/13	Sun	1654	Rear-End	0	0	1	Day	Wet	Not Coded
386	0.000	05/11/13	Sun	2035	Rear-End	0	0	1	Night	Wet	Not Coded
387	0.000	05/11/13	Sun	2319	Angle	0	0	1	Night	Dry	Not Coded
388	0.000	05/11/13	Sun	1334	Rear-End	0	0	1	Day	Dry	Not Coded
389	0.000	05/12/13	Mon	0128	Not Coded	0	1	0	Unknown	Other	Not Coded
390	0.000	05/12/13	Mon	1630	Not Coded	0	0	1	Unknown	Other	Not Coded
391	0.000	05/12/13	Mon	1249	Not Coded	0	0	1	Unknown	Other	Not Coded
392	0.000	05/13/13	Tue	1945	Not Coded	0	0	1	Unknown	Other	Not Coded
393	0.000	05/14/13	Wed	1002	Not Coded	0	0	1	Day	Dry	Not Coded
394	0.000	05/14/13	Wed	1801	Not Coded	0	0	1	Unknown	Other	Not Coded
395	0.000	05/15/13	Thu	1250	Not Coded	0	0	1	Day	Dry	Not Coded
396	0.000	05/15/13	Thu	1420	Not Coded	0	0	1	Day	Dry	Not Coded
397	0.000	05/15/13	Thu	1318	Not Coded	0	1	0	Day	Dry	Not Coded
398	0.000	05/15/13	Thu	1713	Not Coded	0	1	0	Day	Dry	Not Coded
399	0.000	05/15/13	Thu	1700	Not Coded	0	0	1	Day	Dry	Not Coded
400	0.000	05/16/13	Fri	1731	Not Coded	0	0	1	Unknown	Other	Not Coded
401	0.000	05/16/13	Fri	1420	Not Coded	0	0	1	Day	Dry	Not Coded
402	0.000	05/16/13	Fri	1720	Not Coded	0	0	1	Unknown	Other	Not Coded
403	0.000	05/16/13	Fri	1434	Not Coded	0	0	1	Unknown	Other	Not Coded
404	0.000	05/16/13	Fri	1155	Not Coded	0	0	1	Day	Dry	Not Coded
405	0.000	05/16/13	Fri	0618	Not Coded	0	0	1	Day	Dry	Not Coded
406	0.000	05/16/13	Fri	1652	Not Coded	0	0	1	Unknown	Other	Not Coded
407	0.000	05/17/13	Sat	1822	Not Coded	0	0	1	Unknown	Other	Not Coded
408	0.000	05/17/13	Sat	1730	Not Coded	0	0	1	Unknown	Other	Not Coded
409	0.000	05/17/13	Sat	1735	Not Coded	0	0	1	Day	Dry	Not Coded
410	0.000	05/18/13	Sun	1302	Not Coded	0	0	1	Unknown	Other	Not Coded
411	0.000	05/18/13	Sun	1223	Angle	0	1	0	Day	Dry	Not Coded
412	0.000	05/18/13	Sun	1030	Not Coded	0	0	1	Day	Dry	Not Coded
413	0.000	05/18/13	Sun	1236	Rear-End	0	0	1	Day	Dry	Not Coded
414	0.000	05/19/13	Mon	2100	Rear-End	0	0	1	Night	Dry	Not Coded

State of Florida Department of Transportation
CRASH SUMMARY

SECTION: Ludlam Trail Corridor f — STATE ROUTE: #N/A
ROADWAY LIMITS: 0 — M.P. 0.000 TO 0.000 — ENGINEER: 0
STUDY PERIOD: FROM 1/ 2013 TO 12/ 2013 — COUNTY: Miami-Dade

No.	MILE POST	DATE	DAY	TIME	CRASH TYPE	FATAL	INJURIES	PROP DAM	DAY / NIGHT	WET / DRY	CONTRIBUTING CAUSE (VEHICLE ONLY)
415	0.000	05/19/13	Mon	1556	Rear-End	0	0	1	Day	Dry	Not Coded
416	0.000	05/19/13	Mon	1925	Left-Turn	0	0	1	Night	Dry	Not Coded
417	0.000	05/19/13	Mon	2311	Angle	0	0	1	Day	Dry	Not Coded
418	0.000	05/19/13	Mon	1330	Not Coded	0	1	0	Day	Dry	Not Coded
419	0.000	05/19/13	Mon	2122	Rear-End	0	0	1	Night	Dry	Not Coded
420	0.000	05/20/13	Tue	2320	Not Coded	0	0	1	Night	Wet	Not Coded
421	0.000	05/20/13	Tue	1457	Rear-End	0	0	1	Day	Wet	Not Coded
422	0.000	05/20/13	Tue	1350	Rear-End	0	0	1	Unknown	Other	Not Coded
423	0.000	05/20/13	Tue	1430	Rear-End	0	0	1	Day	Wet	Not Coded
424	0.000	05/20/13	Tue	1011	Not Coded	0	0	1	Day	Dry	Not Coded
425	0.000	05/20/13	Tue	1615	Rear-End	0	0	1	Unknown	Other	Not Coded
426	0.000	05/20/13	Tue	1625	Not Coded	0	0	1	Day	Wet	Not Coded
427	0.000	05/20/13	Tue	1622	Not Coded	0	0	1	Day	Wet	Not Coded
428	0.000	05/21/13	Wed	0830	Angle	0	0	1	Day	Wet	Not Coded
429	0.000	05/21/13	Wed	1803	Not Coded	0	0	1	Unknown	Other	Not Coded
430	0.000	05/21/13	Wed	1630	Backed Into	0	0	1	Unknown	Other	Not Coded
431	0.000	05/22/13	Thu	1251	Not Coded	0	0	1	Day	Dry	Not Coded
432	0.000	05/22/13	Thu	1758	Angle	0	0	1	Day	Dry	Not Coded
433	0.000	05/22/13	Thu	0900	Right-Turn	0	0	1	Unknown	Other	Not Coded
434	0.000	05/22/13	Thu	1335	Angle	0	0	1	Day	Dry	Not Coded
435	0.000	05/22/13	Thu	0850	Angle	0	0	1	Day	Dry	Not Coded
436	0.000	05/22/13	Thu	1726	Sideswipe	0	0	1	Unknown	Other	Not Coded
437	0.000	05/23/13	Fri	1556	Left-Turn	0	1	0	Day	Dry	Not Coded
438	0.000	05/23/13	Fri	1524	Angle	0	0	1	Day	Dry	Not Coded
439	0.000	05/23/13	Fri	1614	Angle	0	0	1	Unknown	Other	Not Coded
440	0.000	05/23/13	Fri	1603	Angle	0	0	1	Unknown	Other	Not Coded
441	0.000	05/23/13	Fri	1436	Not Coded	0	0	1	Unknown	Other	Not Coded
442	0.000	05/23/13	Fri	1500	Parked Motor Vehicle	0	0	1	Day	Dry	Not Coded
443	0.000	05/23/13	Fri	1808	Sideswipe	0	1	0	Day	Dry	Not Coded
444	0.000	05/24/13	Sat	1835	Not Coded	0	0	1	Day	Wet	Not Coded
445	0.000	05/24/13	Sat	1720	Rear-End	0	0	1	Day	Wet	Not Coded
446	0.000	05/24/13	Sat	1720	Sideswipe	0	0	1	Day	Wet	Not Coded
447	0.000	05/24/13	Sat	1530	Rear-End	0	0	1	Unknown	Other	Not Coded
448	0.000	05/25/13	Sun	1203	Not Coded	0	1	0	Day	Dry	Not Coded
449	0.000	05/26/13	Mon	1519	Not Coded	0	0	1	Unknown	Other	Not Coded
450	0.000	05/27/13	Tue	1625	Backed Into	0	0	1	Day	Dry	Not Coded
451	0.000	05/27/13	Tue	0715	Right-Turn	0	0	1	Day	Dry	Not Coded
452	0.000	05/27/13	Tue	1150	Not Coded	0	0	1	Day	Dry	Not Coded
453	0.000	05/29/13	Thu	1623	Sideswipe	0	1	0	Unknown	Other	Not Coded
454	0.000	05/29/13	Thu	1225	Sideswipe	0	0	1	Day	Wet	Not Coded
455	0.000	05/30/13	Fri	1820	Angle	0	0	1	Day	Dry	Not Coded
456	0.000	05/30/13	Fri	1100	Backed Into	0	0	1	Unknown	Other	Not Coded
457	0.000	05/31/13	Sat	1540	Parked Motor Vehicle	0	0	1	Day	Dry	Not Coded
458	0.000	05/31/13	Sat	2122	Not Coded	0	0	1	Unknown	Other	Not Coded
459	0.000	05/31/13	Sat	0800	Not Coded	0	0	1	Day	Wet	Not Coded
460	0.000	05/31/13	Sat	1315	Not Coded	0	0	1	Unknown	Other	Not Coded
461	0.000	05/31/13	Sat	1830	Rear-End	0	0	1	Day	Dry	Not Coded
462	0.000	06/01/13	Sun	0540	Rear-End	0	0	1	Night	Wet	Not Coded
463	0.000	06/04/13	Wed	1015	Rear-End	0	0	1	Unknown	Other	Not Coded
464	0.000	06/04/13	Wed	1144	Rear-End	0	1	0	Day	Dry	Not Coded
465	0.000	06/05/13	Thu	0705	Rear-End	0	0	1	Day	Dry	Not Coded
466	0.000	06/05/13	Thu	1733	Rear-End	0	0	1	Unknown	Other	Not Coded
467	0.000	06/05/13	Thu	1704	Right-Turn	0	0	1	Day	Dry	Not Coded
468	0.000	06/05/13	Thu	2043	Angle	0	0	1	Unknown	Other	Not Coded
469	0.000	06/05/13	Thu	1814	Not Coded	0	0	1	Unknown	Other	Not Coded
470	0.000	06/05/13	Thu	1231	Rear-End	0	1	0	Day	Dry	Not Coded
471	0.000	06/05/13	Thu	1600	Angle	0	0	1	Unknown	Other	Not Coded
472	0.000	06/05/13	Thu	0905	Left-Turn	0	0	1	Day	Dry	Not Coded
473	0.000	06/06/13	Fri	1208	Not Coded	0	0	1	Unknown	Other	Not Coded
474	0.000	06/06/13	Fri	0315	Backed Into	0	0	1	Night	Wet	Not Coded
475	0.000	06/06/13	Fri	0820	Left-Turn	0	0	1	Unknown	Other	Not Coded
476	0.000	06/06/13	Fri	0543	Not Coded	0	1	0	Night	Wet	Not Coded
477	0.000	06/07/13	Sat	1810	Rear-End	0	0	1	Day	Wet	Not Coded
478	0.000	06/07/13	Sat	1345	Rear-End	0	0	1	Day	Dry	Not Coded
479	0.000	06/08/13	Sun	2245	Rear-End	0	1	0	Night	Dry	Not Coded
480	0.000	06/08/13	Sun	1439	Not Coded	0	0	1	Day	Dry	Not Coded
481	0.000	06/08/13	Sun	1538	Rear-End	0	0	1	Day	Dry	Not Coded
482	0.000	06/08/13	Sun	1545	Curb	0	0	1	Unknown	Other	Not Coded
483	0.000	06/08/13	Sun	1750	Not Coded	0	0	1	Unknown	Other	Not Coded

State of Florida Department of Transportation
CRASH SUMMARY

SECTION: Ludlam Trail Corridor f — STATE ROUTE: #N/A
ROADWAY LIMITS: 0 — M.P. 0.000 TO 0.000 — ENGINEER: 0
STUDY PERIOD: FROM 1/ 2013 TO 12/ 2013 — COUNTY: Miami-Dade

No.	MILE POST	DATE	DAY	TIME	CRASH TYPE	FATAL	INJURIES	PROP DAM	DAY / NIGHT	WET / DRY	CONTRIBUTING CAUSE (VEHICLE ONLY)
484	0.000	06/10/13	Tue	1302	Rear-End	0	0	1	Day	Dry	Not Coded
485	0.000	06/11/13	Wed	1226	Rear-End	0	0	1	Day	Dry	Not Coded
486	0.000	06/11/13	Wed	0938	Not Coded	0	0	1	Day	Dry	Not Coded
487	0.000	06/11/13	Wed	0730	Rear-End	0	0	1	Day	Dry	Not Coded
488	0.000	06/11/13	Wed	2210	Rear-End	0	1	0	Night	Dry	Not Coded
489	0.000	06/12/13	Thu	1620	Not Coded	0	1	0	Day	Wet	Not Coded
490	0.000	06/12/13	Thu	1635	Rear-End	0	0	1	Day	Wet	Not Coded
491	0.000	06/12/13	Thu	1423	Not Coded	0	1	0	Day	Wet	Not Coded
492	0.000	06/12/13	Thu	1735	Not Coded	0	0	1	Unknown	Other	Not Coded
493	0.000	06/13/13	Fri	1710	Rear-End	0	0	1	Day	Dry	Not Coded
494	0.000	06/14/13	Sat	1320	Not Coded	0	0	1	Unknown	Other	Not Coded
495	0.000	06/14/13	Sat	1747	Angle	0	0	1	Unknown	Other	Not Coded
496	0.000	06/14/13	Sat	0900	Not Coded	0	0	1	Day	Dry	Not Coded
497	0.000	06/14/13	Sat	1625	Angle	0	0	1	Day	Dry	Not Coded
498	0.000	06/14/13	Sat	2050	Not Coded	0	1	0	Night	Dry	Not Coded
499	0.000	06/15/13	Sun	1301	Other Post, Pole Or Support	0	0	1	Day	Dry	Not Coded
500	0.000	06/18/13	Wed	0836	Left-Turn	0	0	1	Day	Dry	Not Coded
501	0.000	06/18/13	Wed	1453	Angle	0	0	1	Day	Dry	Not Coded
502	0.000	06/18/13	Wed	2010	Sideswipe	0	0	1	Unknown	Other	Not Coded
503	0.000	06/18/13	Wed	1845	Rear-End	0	0	1	Day	Dry	Not Coded
504	0.000	06/19/13	Thu	1402	Pedestrian	0	1	0	Day	Dry	Not Coded
505	0.000	06/19/13	Thu	1210	Rear-End	0	0	1	Day	Dry	Not Coded
506	0.000	06/19/13	Thu	0054	Sideswipe	0	1	0	Night	Dry	Not Coded
507	0.000	06/19/13	Thu	1637	Not Coded	0	0	1	Day	Dry	Not Coded
508	0.000	06/19/13	Thu	1313	Not Coded	0	0	1	Day	Dry	Not Coded
509	0.000	06/20/13	Fri	0010	Not Coded	0	0	1	Night	Dry	Not Coded
510	0.000	06/20/13	Fri	1216	Left-Turn	0	0	1	Day	Dry	Not Coded
511	0.000	06/20/13	Fri	1720	Rear-End	0	0	1	Day	Dry	Not Coded
512	0.000	06/20/13	Fri	1105	Rear-End	0	1	0	Day	Dry	Not Coded
513	0.000	06/21/13	Sat	1500	Not Coded	0	0	1	Day	Dry	Not Coded
514	0.000	06/21/13	Sat	1150	Left-Turn	0	0	1	Day	Dry	Not Coded
515	0.000	06/22/13	Sun	1010	Pedestrian	0	0	1	Day	Dry	Not Coded
516	0.000	06/22/13	Sun	1520	Not Coded	0	0	1	Unknown	Other	Not Coded
517	0.000	06/23/13	Mon	1037	Rear-End	0	0	1	Day	Dry	Not Coded
518	0.000	06/23/13	Mon	1352	Rear-End	0	0	1	Day	Dry	Not Coded
519	0.000	06/24/13	Tue	1654	Not Coded	0	0	1	Unknown	Other	Not Coded
520	0.000	06/24/13	Tue	0850	Sideswipe	0	0	1	Day	Dry	Not Coded
521	0.000	06/24/13	Tue	1659	Not Coded	0	0	1	Day	Dry	Not Coded
522	0.000	06/24/13	Tue	1545	Not Coded	0	0	1	Day	Dry	Not Coded
523	0.000	06/26/13	Thu	0845	Rear-End	0	0	1	Unknown	Other	Not Coded
524	0.000	06/27/13	Fri	0830	Rear-End	0	0	1	Day	Wet	Not Coded
525	0.000	06/27/13	Fri	1550	Left-Turn	0	0	1	Day	Wet	Not Coded
526	0.000	06/27/13	Fri	1909	Left-Turn	0	0	1	Day	Dry	Not Coded
527	0.000	06/27/13	Fri	1627	Left-Turn	0	0	1	Unknown	Other	Not Coded
528	0.000	06/27/13	Fri	1528	Rear-End	0	0	1	Day	Wet	Not Coded
529	0.000	06/28/13	Sat	1732	Not Coded	0	0	1	Unknown	Other	Not Coded
530	0.000	06/29/13	Sun	0736	Sideswipe	0	0	1	Day	Dry	Not Coded
531	0.000	06/29/13	Sun	1015	Left-Turn	0	1	0	Day	Dry	Not Coded
532	0.000	06/29/13	Sun	1415	Left-Turn	0	0	1	Day	Wet	Not Coded
533	0.000	06/29/13	Sun	1807	Rear-End	0	0	1	Day	Wet	Not Coded
534	0.000	06/30/13	Mon	1924	Left-Turn	0	0	1	Day	Wet	Not Coded
535	0.000	07/01/13	Tue	0130	Rear-End	0	1	0	Night	Dry	Not Coded
536	0.000	07/01/13	Tue	1259	Rear-End	0	0	1	Day	Wet	Not Coded
537	0.000	07/01/13	Tue	1853	Rear-End	0	0	1	Unknown	Other	Not Coded
538	0.000	07/01/13	Tue	1504	Rear-End	0	0	1	Unknown	Other	Not Coded
539	0.000	07/01/13	Tue	1750	Parked Motor Vehicle	0	0	1	Unknown	Other	Not Coded
540	0.000	07/02/13	Wed	2045	Angle	0	0	1	Night	Dry	Not Coded
541	0.000	07/02/13	Wed	0953	Angle	0	0	1	Day	Wet	Not Coded
542	0.000	07/02/13	Wed	1823	Not Coded	0	0	1	Unknown	Other	Not Coded
543	0.000	07/02/13	Wed	1235	Rear-End	0	0	1	Day	Dry	Not Coded
544	0.000	07/02/13	Wed	1532	Not Coded	0	0	1	Day	Dry	Not Coded
545	0.000	07/03/13	Thu	1512	Utility Pole/Light Support	0	0	1	Day	Dry	Not Coded
546	0.000	07/03/13	Thu	1623	Rear-End	0	0	1	Unknown	Other	Not Coded
547	0.000	07/03/13	Thu	1528	Rear-End	0	1	0	Day	Dry	Not Coded
548	0.000	07/03/13	Thu	1155	Overturn/Rollover	0	0	1	Day	Dry	Not Coded
549	0.000	07/03/13	Thu	1700	Sideswipe	0	1	0	Unknown	Other	Not Coded
550	0.000	07/04/13	Fri	2324	Rear-End	0	0	1	Night	Wet	Not Coded
551	0.000	07/04/13	Fri	1725	Not Coded	0	0	1	Unknown	Other	Not Coded
552	0.000	07/05/13	Sat	0605	Rear-End	0	0	1	Night	Wet	Not Coded

State of Florida Department of Transportation
CRASH SUMMARY

SECTION: Ludlam Trail Corridor f — STATE ROUTE: #N/A
ROADWAY LIMITS: 0 — M.P. 0.000 TO 0.000 — ENGINEER: 0
STUDY PERIOD: FROM 1/ 2013 TO 12/ 2013 — COUNTY: Miami-Dade

No.	MILE POST	DATE	DAY	TIME	CRASH TYPE	FATAL	INJURIES	PROP DAM	DAY / NIGHT	WET / DRY	CONTRIBUTING CAUSE (VEHICLE ONLY)
553	0.000	07/05/13	Sat	1700	Rear-End	0	0	1	Unknown	Other	Not Coded
554	0.000	07/06/13	Sun	1637	Rear-End	0	0	1	Day	Dry	Not Coded
555	0.000	07/07/13	Mon	1014	Angle	1	0	0	Day	Dry	Not Coded
556	0.000	07/07/13	Mon	2032	Rear-End	0	1	0	Night	Dry	Not Coded
557	0.000	07/08/13	Tue	1445	Not Coded	0	0	1	Day	Dry	Not Coded
558	0.000	07/08/13	Tue	1742	Utility Pole/Light Support	0	0	1	Unknown	Other	Not Coded
559	0.000	07/08/13	Tue	2044	Backed Into	0	0	1	Unknown	Other	Not Coded
560	0.000	07/08/13	Tue	1810	Rear-End	0	0	1	Day	Dry	Not Coded
561	0.000	07/08/13	Tue	1825	Rear-End	0	0	1	Unknown	Other	Not Coded
562	0.000	07/08/13	Tue	1014	Rear-End	0	1	0	Day	Dry	Not Coded
563	0.000	07/09/13	Wed	2108	Curb	0	1	0	Night	Dry	Not Coded
564	0.000	07/09/13	Wed	0306	Angle	0	1	0	Night	Wet	Not Coded
565	0.000	07/09/13	Wed	2105	Rear-End	0	0	1	Unknown	Other	Not Coded
566	0.000	07/09/13	Wed	1829	Not Coded	0	0	1	Day	Dry	Not Coded
567	0.000	07/09/13	Wed	0735	Rear-End	0	0	1	Unknown	Other	Not Coded
568	0.000	07/09/13	Wed	1425	Not Coded	0	0	1	Unknown	Other	Not Coded
569	0.000	07/09/13	Wed	2117	Rear-End	0	0	1	Unknown	Other	Not Coded
570	0.000	07/10/13	Thu	1224	Rear-End	0	0	1	Day	Dry	Not Coded
571	0.000	07/10/13	Thu	1853	Not Coded	0	0	1	Day	Dry	Not Coded
572	0.000	07/11/13	Fri	2022	Left-Turn	0	0	1	Night	Dry	Not Coded
573	0.000	07/11/13	Fri	0920	Left-Turn	0	1	0	Day	Dry	Not Coded
574	0.000	07/12/13	Sat	1838	Sideswipe	0	0	1	Night	Dry	Not Coded
575	0.000	07/12/13	Sat	1145	Not Coded	0	0	1	Day	Dry	Not Coded
576	0.000	07/12/13	Sat	0946	Rear-End	0	0	1	Day	Dry	Not Coded
577	0.000	07/12/13	Sat	1033	Rear-End	0	0	1	Day	Dry	Not Coded
578	0.000	07/13/13	Sun	1930	Not Coded	0	0	1	Day	Wet	Not Coded
579	0.000	07/13/13	Sun	2014	Angle	0	0	1	Night	Wet	Not Coded
580	0.000	07/13/13	Sun	1958	Not Coded	0	0	1	Day	Wet	Not Coded
581	0.000	07/14/13	Mon	1500	Sideswipe	0	0	1	Unknown	Other	Not Coded
582	0.000	07/14/13	Mon	0035	Not Coded	0	0	1	Night	Wet	Not Coded
583	0.000	07/15/13	Tue	1445	Rear-End	0	0	1	Unknown	Other	Not Coded
584	0.000	07/15/13	Tue	1724	Angle	0	0	1	Unknown	Other	Not Coded
585	0.000	07/15/13	Tue	0855	Backed Into	0	0	1	Unknown	Other	Not Coded
586	0.000	07/15/13	Tue	1640	Rear-End	0	0	1	Day	Dry	Not Coded
587	0.000	07/15/13	Tue	1627	Not Coded	0	1	0	Day	Dry	Not Coded
588	0.000	07/15/13	Tue	1125	Rear-End	0	0	1	Unknown	Other	Not Coded
589	0.000	07/15/13	Tue	2348	Rear-End	0	0	1	Unknown	Other	Not Coded
590	0.000	07/17/13	Thu	1635	Rear-End	0	0	1	Day	Wet	Not Coded
591	0.000	07/18/13	Fri	0730	Left-Turn	0	0	1	Day	Dry	Not Coded
592	0.000	07/18/13	Fri	0020	Rear-End	0	0	1	Night	Wet	Not Coded
593	0.000	07/18/13	Fri	1730	Other Fixed Object	0	0	1	Unknown	Other	Not Coded
594	0.000	07/18/13	Fri	1100	Rear-End	0	0	1	Unknown	Other	Not Coded
595	0.000	07/19/13	Sat	2120	Angle	0	0	1	Night	Dry	Not Coded
596	0.000	07/19/13	Sat	1402	Not Coded	0	1	0	Unknown	Dry	Not Coded
597	0.000	07/19/13	Sat	0856	Not Coded	0	0	1	Unknown	Other	Not Coded
598	0.000	07/19/13	Sat	1631	Not Coded	0	0	1	Day	Dry	Not Coded
599	0.000	07/19/13	Sat	1820	Rear-End	0	0	1	Unknown	Other	Not Coded
600	0.000	07/20/13	Sun	0900	Sideswipe	0	0	1	Day	Dry	Not Coded
601	0.000	07/20/13	Sun	1835	Left-Turn	0	1	0	Day	Wet	Not Coded
602	0.000	07/20/13	Sun	2140	Sideswipe	0	0	1	Night	Dry	Not Coded
603	0.000	07/20/13	Sun	1530	Sideswipe	0	0	1	Day	Dry	Not Coded
604	0.000	07/21/13	Mon	0008	Left-Turn	0	0	1	Night	Dry	Not Coded
605	0.000	07/21/13	Mon	1739	Angle	0	0	1	Day	Dry	Not Coded
606	0.000	07/22/13	Tue	1755	Rear-End	0	1	0	Day	Dry	Not Coded
607	0.000	07/22/13	Tue	1920	Angle	0	0	1	Day	Dry	Not Coded
608	0.000	07/22/13	Tue	0807	Head-On	0	1	0	Day	Dry	Not Coded
609	0.000	07/22/13	Tue	0625	Animal	0	0	1	Night	Dry	Not Coded
610	0.000	07/22/13	Tue	1650	Angle	0	0	1	Day	Dry	Not Coded
611	0.000	07/23/13	Wed	1900	Rear-End	0	0	1	Unknown	Other	Not Coded
612	0.000	07/23/13	Wed	0930	Parked Motor Vehicle	0	0	1	Unknown	Other	Not Coded
613	0.000	07/24/13	Thu	1330	Rear-End	0	0	1	Day	Dry	Not Coded
614	0.000	07/24/13	Thu	1504	Angle	0	0	1	Day	Dry	Not Coded
615	0.000	07/24/13	Thu	1933	Not Coded	0	0	1	Unknown	Other	Not Coded
616	0.000	07/24/13	Thu	1748	Rear-End	0	0	1	Day	Dry	Not Coded
617	0.000	07/24/13	Thu	0548	Sideswipe	0	0	1	Unknown	Other	Not Coded
618	0.000	07/25/13	Fri	1620	Not Coded	0	1	0	Day	Dry	Not Coded
619	0.000	07/26/13	Sat	0112	Not Coded	0	0	1	Night	Dry	Not Coded
620	0.000	07/26/13	Sat	0922	Rear-End	0	0	1	Unknown	Other	Not Coded
621	0.000	07/26/13	Sat	1801	Rear-End	0	0	1	Day	Dry	Not Coded

State of Florida Department of Transportation
CRASH SUMMARY

SECTION: Ludlam Trail Corridor f — STATE ROUTE: #N/A
ROADWAY LIMITS: 0 — M.P. 0.000 TO 0.000 — ENGINEER: 0
STUDY PERIOD: FROM 1/ 2013 TO 12/ 2013 — COUNTY: Miami-Dade

No.	MILE POST	DATE	DAY	TIME	CRASH TYPE	FATAL	INJURIES	PROP DAM	DAY / NIGHT	WET / DRY	CONTRIBUTING CAUSE (VEHICLE ONLY)
622	0.000	07/27/13	Sun	1140	Rear-End	0	0	1	Day	Wet	Not Coded
623	0.000	07/28/13	Mon	0425	Left-Turn	0	0	1	Unknown	Other	Not Coded
624	0.000	07/28/13	Mon	0135	Rear-End	0	0	1	Night	Wet	Not Coded
625	0.000	07/29/13	Tue	1937	Not Coded	0	0	1	Day	Dry	Not Coded
626	0.000	07/29/13	Tue	1614	Rear-End	0	0	1	Day	Dry	Not Coded
627	0.000	07/29/13	Tue	0025	Overturn/Rollover	0	0	1	Day	Dry	Not Coded
628	0.000	07/29/13	Tue	1640	Not Coded	0	1	0	Day	Dry	Not Coded
629	0.000	07/29/13	Tue	1739	Rear-End	0	0	1	Day	Dry	Not Coded
630	0.000	07/30/13	Wed	1320	Angle	0	0	1	Unknown	Other	Not Coded
631	0.000	07/30/13	Wed	1320	Sideswipe	0	0	1	Unknown	Other	Not Coded
632	0.000	07/30/13	Wed	1717	Rear-End	0	0	1	Day	Dry	Not Coded
633	0.000	07/30/13	Wed	1010	Rear-End	0	0	1	Unknown	Other	Not Coded
634	0.000	07/31/13	Thu	1552	Left-Turn	0	0	1	Day	Dry	Not Coded
635	0.000	07/31/13	Thu	1430	Left-Turn	0	1	0	Day	Dry	Not Coded
636	0.000	08/01/13	Fri	1819	Angle	0	0	1	Day	Dry	Not Coded
637	0.000	08/01/13	Fri	1926	Rear-End	0	0	1	Night	Dry	Not Coded
638	0.000	08/01/13	Fri	1752	Sideswipe	0	0	1	Unknown	Other	Not Coded
639	0.000	08/01/13	Fri	1720	Rear-End	0	1	0	Day	Dry	Not Coded
640	0.000	08/01/13	Fri	1500	Rear-End	0	1	0	Day	Dry	Not Coded
641	0.000	08/01/13	Fri	1102	Sideswipe	0	0	1	Unknown	Other	Not Coded
642	0.000	08/02/13	Sat	1943	Angle	0	0	1	Night	Dry	Not Coded
643	0.000	08/03/13	Sun	2124	Not Coded	0	0	1	Day	Wet	Not Coded
644	0.000	08/04/13	Mon	1243	Backed Into	0	1	0	Day	Dry	Not Coded
645	0.000	08/05/13	Tue	0910	Rear-End	0	0	1	Unknown	Other	Not Coded
646	0.000	08/06/13	Wed	1610	Not Coded	0	0	1	Unknown	Other	Not Coded
647	0.000	08/06/13	Wed	1054	Overturn/Rollover	0	0	1	Day	Dry	Not Coded
648	0.000	08/06/13	Wed	2250	Not Coded	0	0	1	Night	Dry	Not Coded
649	0.000	08/06/13	Wed	1728	Angle	0	0	1	Unknown	Other	Not Coded
650	0.000	08/06/13	Wed	1245	Rear-End	0	0	1	Unknown	Other	Not Coded
651	0.000	08/07/13	Thu	1155	Tree (Standing)	0	0	1	Day	Dry	Not Coded
652	0.000	08/07/13	Thu	1420	Not Coded	0	0	1	Unknown	Other	Not Coded
653	0.000	08/09/13	Sat	1744	Parked Motor Vehicle	0	0	1	Unknown	Other	Not Coded
654	0.000	08/09/13	Sat	2300	Right-Turn	0	0	1	Night	Dry	Not Coded
655	0.000	08/09/13	Sat	1952	Angle	0	0	1	Day	Dry	Not Coded
656	0.000	08/09/13	Sat	0640	Rear-End	0	1	0	Night	Wet	Not Coded
657	0.000	08/09/13	Sat	1910	Not Coded	0	0	1	Day	Dry	Not Coded
658	0.000	08/10/13	Sun	2159	Rear-End	0	0	1	Night	Dry	Not Coded
659	0.000	08/10/13	Sun	1438	Right-Turn	0	1	0	Day	Dry	Not Coded
660	0.000	08/10/13	Sun	1800	Rear-End	0	0	1	Day	Dry	Not Coded
661	0.000	08/11/13	Mon	0105	Overturn/Rollover	0	0	1	Night	Dry	Not Coded
662	0.000	08/11/13	Mon	1242	Rear-End	0	0	1	Day	Dry	Not Coded
663	0.000	08/11/13	Mon	1510	Angle	0	0	1	Day	Dry	Not Coded
664	0.000	08/12/13	Tue	1409	Not Coded	0	0	1	Day	Dry	Not Coded
665	0.000	08/12/13	Tue	1645	Not Coded	0	0	1	Day	Dry	Not Coded
666	0.000	08/12/13	Tue	2212	Not Coded	0	0	1	Unknown	Other	Not Coded
667	0.000	08/13/13	Wed	1445	Not Coded	0	0	1	Day	Dry	Not Coded
668	0.000	08/13/13	Wed	1800	Rear-End	0	0	1	Unknown	Other	Not Coded
669	0.000	08/13/13	Wed	1609	Rear-End	0	0	1	Day	Dry	Not Coded
670	0.000	08/14/13	Thu	1345	Angle	0	0	1	Day	Dry	Not Coded
671	0.000	08/14/13	Thu	0636	Rear-End	0	0	1	Unknown	Other	Not Coded
672	0.000	08/14/13	Thu	1750	Rear-End	0	0	1	Day	Dry	Not Coded
673	0.000	08/14/13	Thu	1642	Not Coded	0	1	0	Day	Dry	Not Coded
674	0.000	08/14/13	Thu	1244	Angle	0	0	1	Day	Dry	Not Coded
675	0.000	08/15/13	Fri	1548	Rear-End	0	0	1	Unknown	Other	Not Coded
676	0.000	08/15/13	Fri	1250	Not Coded	0	1	0	Day	Dry	Not Coded
677	0.000	08/15/13	Fri	0915	Rear-End	0	0	1	Day	Wet	Not Coded
678	0.000	08/16/13	Sat	1753	Rear-End	0	0	1	Day	Dry	Not Coded
679	0.000	08/16/13	Sat	1717	Other Non-Collision	0	0	1	Day	Dry	Not Coded
680	0.000	08/16/13	Sat	0920	Not Coded	0	0	1	Day	Dry	Not Coded
681	0.000	08/16/13	Sat	1640	Not Coded	0	1	0	Day	Dry	Not Coded
682	0.000	08/17/13	Sun	1200	Sideswipe	0	1	0	Day	Dry	Not Coded
683	0.000	08/18/13	Mon	1400	Rear-End	0	0	1	Day	Dry	Not Coded
684	0.000	08/18/13	Mon	1321	Not Coded	0	0	1	Day	Wet	Not Coded
685	0.000	08/18/13	Mon	1645	Not Coded	0	1	0	Day	Dry	Not Coded
686	0.000	08/18/13	Mon	1230	Left-Turn	0	1	0	Day	Wet	Not Coded
687	0.000	08/19/13	Tue	1702	Not Coded	0	0	1	Day	Dry	Not Coded
688	0.000	08/19/13	Tue	1720	Not Coded	0	0	1	Day	Dry	Not Coded
689	0.000	08/19/13	Tue	1718	Rear-End	0	0	1	Day	Dry	Not Coded
690	0.000	08/19/13	Tue	1551	Right-Turn	0	0	1	Day	Wet	Not Coded

State of Florida Department of Transportation
CRASH SUMMARY

SECTION: Ludlam Trail Corridor f — STATE ROUTE: #N/A
ROADWAY LIMITS: 0 — M.P. 0.000 TO 0.000 — ENGINEER: 0
STUDY PERIOD: FROM 1/ 2013 TO 12/ 2013 — COUNTY: Miami-Dade

No.	MILE POST	DATE	DAY	TIME	CRASH TYPE	FATAL	INJURIES	PROP DAM	DAY / NIGHT	WET / DRY	CONTRIBUTING CAUSE (VEHICLE ONLY)
691	0.000	08/19/13	Tue	0745	Left-Turn	0	0	1	Day	Dry	Not Coded
692	0.000	08/19/13	Tue	1425	Rear-End	0	0	1	Unknown	Other	Not Coded
693	0.000	08/19/13	Tue	1643	Not Coded	0	0	1	Day	Dry	Not Coded
694	0.000	08/20/13	Wed	2229	Left-Turn	0	0	1	Night	Dry	Not Coded
695	0.000	08/20/13	Wed	1050	Sideswipe	0	0	1	Day	Dry	Not Coded
696	0.000	08/20/13	Wed	1115	Other Traffic Barrier	0	0	1	Unknown	Other	Not Coded
697	0.000	08/20/13	Wed	1720	Backed Into	0	0	1	Day	Dry	Not Coded
698	0.000	08/20/13	Wed	1804	Rear-End	0	0	1	Day	Dry	Not Coded
699	0.000	08/21/13	Thu	0106	Sideswipe	0	0	1	Night	Dry	Not Coded
700	0.000	08/21/13	Thu	1050	Rear-End	0	0	1	Day	Wet	Not Coded
701	0.000	08/21/13	Thu	1711	Sideswipe	0	0	1	Day	Dry	Not Coded
702	0.000	08/21/13	Thu	1015	Not Coded	0	0	1	Unknown	Other	Not Coded
703	0.000	08/21/13	Thu	1355	Angle	0	0	1	Day	Dry	Not Coded
704	0.000	08/21/13	Thu	1442	Sideswipe	0	1	0	Day	Dry	Not Coded
705	0.000	08/22/13	Fri	1810	Rear-End	0	0	1	Day	Dry	Not Coded
706	0.000	08/22/13	Fri	1255	Angle	0	0	1	Day	Dry	Not Coded
707	0.000	08/22/13	Fri	1550	Not Coded	0	0	1	Day	Dry	Not Coded
708	0.000	08/23/13	Sat	1145	Rear-End	0	1	0	Day	Dry	Not Coded
709	0.000	08/23/13	Sat	1225	Rear-End	0	0	1	Unknown	Other	Not Coded
710	0.000	08/23/13	Sat	1311	Left-Turn	0	0	1	Day	Dry	Not Coded
711	0.000	08/23/13	Sat	1420	Not Coded	0	0	1	Day	Dry	Not Coded
712	0.000	08/24/13	Sun	1236	Left-Turn	0	1	0	Day	Dry	Not Coded
713	0.000	08/25/13	Mon	1900	Rear-End	0	0	1	Night	Dry	Not Coded
714	0.000	08/25/13	Mon	1111	Left-Turn	0	0	1	Day	Wet	Not Coded
715	0.000	08/26/13	Tue	1216	Sideswipe	0	1	0	Day	Dry	Not Coded
716	0.000	08/26/13	Tue	0747	Sideswipe	0	0	1	Day	Dry	Not Coded
717	0.000	08/26/13	Tue	1605	Angle	0	0	1	Day	Dry	Not Coded
718	0.000	08/26/13	Tue	1545	Rear-End	0	0	1	Day	Dry	Not Coded
719	0.000	08/27/13	Wed	2320	Right-Turn	0	1	0	Night	Dry	Not Coded
720	0.000	08/27/13	Wed	0808	Rear-End	0	0	1	Day	Dry	Not Coded
721	0.000	08/28/13	Thu	0635	Left-Turn	0	0	1	Day	Wet	Not Coded
722	0.000	08/29/13	Fri	1631	Left-Turn	0	0	1	Day	Dry	Not Coded
723	0.000	08/29/13	Fri	1155	Left-Turn	0	0	1	Unknown	Other	Not Coded
724	0.000	08/29/13	Fri	1540	Rear-End	0	0	1	Day	Dry	Not Coded
725	0.000	08/29/13	Fri	1030	Rear-End	0	0	1	Day	Dry	Not Coded
726	0.000	08/29/13	Fri	1230	Rear-End	0	0	1	Day	Dry	Not Coded
727	0.000	08/29/13	Fri	2035	Angle	0	0	1	Night	Dry	Not Coded
728	0.000	08/29/13	Fri	1205	Not Coded	0	1	0	Day	Dry	Not Coded
729	0.000	08/29/13	Fri	1600	Rear-End	0	0	1	Day	Dry	Not Coded
730	0.000	08/29/13	Fri	1508	Angle	0	0	1	Day	Dry	Not Coded
731	0.000	08/30/13	Sat	1951	Rear-End	0	1	0	Night	Dry	Not Coded
732	0.000	08/30/13	Sat	1535	Not Coded	0	0	1	Day	Dry	Not Coded
733	0.000	08/30/13	Sat	1330	Backed Into	0	0	1	Day	Dry	Not Coded
734	0.000	08/31/13	Sun	1221	Angle	0	0	1	Day	Dry	Not Coded
735	0.000	08/31/13	Sun	1526	Left-Turn	0	0	1	Unknown	Other	Not Coded
736	0.000	08/31/13	Sun	1442	Rear-End	0	0	1	Day	Dry	Not Coded
737	0.000	09/02/13	Tue	1101	Angle	0	1	0	Day	Dry	Not Coded
738	0.000	09/02/13	Tue	1255	Not Coded	0	1	0	Day	Dry	Not Coded
739	0.000	09/03/13	Wed	1320	Angle	0	0	1	Unknown	Other	Not Coded
740	0.000	09/03/13	Wed	1700	Rear-End	0	0	1	Day	Dry	Not Coded
741	0.000	09/03/13	Wed	1336	Angle	0	1	0	Day	Dry	Not Coded
742	0.000	09/03/13	Wed	0835	Rear-End	0	0	1	Day	Dry	Not Coded
743	0.000	09/03/13	Wed	1611	Rear-End	0	0	1	Day	Dry	Not Coded
744	0.000	09/03/13	Wed	0845	Rear-End	0	1	0	Day	Dry	Not Coded
745	0.000	09/04/13	Thu	0845	Not Coded	0	1	0	Day	Dry	Not Coded
746	0.000	09/04/13	Thu	0714	Left-Turn	0	0	1	Day	Dry	Not Coded
747	0.000	09/04/13	Thu	1815	Rear-End	0	0	1	Day	Dry	Not Coded
748	0.000	09/05/13	Fri	1213	Backed Into	0	0	1	Unknown	Other	Not Coded
749	0.000	09/05/13	Fri	0837	Rear-End	0	1	0	Day	Dry	Not Coded
750	0.000	09/05/13	Fri	0730	Rear-End	0	0	1	Day	Dry	Not Coded
751	0.000	09/06/13	Sat	1600	Rear-End	0	0	1	Day	Dry	Not Coded
752	0.000	09/06/13	Sat	1455	Left-Turn	0	0	1	Day	Dry	Not Coded
753	0.000	09/06/13	Sat	0758	Rear-End	0	0	1	Day	Dry	Not Coded
754	0.000	09/07/13	Sun	1520	Rear-End	0	1	0	Day	Dry	Not Coded
755	0.000	09/08/13	Mon	1245	Angle	0	0	1	Day	Dry	Not Coded
756	0.000	09/08/13	Mon	0120	Rear-End	0	1	0	Night	Dry	Not Coded
757	0.000	09/08/13	Mon	1745	Sideswipe	0	0	1	Day	Dry	Not Coded
758	0.000	09/08/13	Mon	0630	Rear-End	0	1	0	Night	Dry	Not Coded
759	0.000	09/09/13	Tue	1740	Not Coded	0	1	0	Day	Dry	Not Coded

State of Florida Department of Transportation
CRASH SUMMARY

SECTION: Ludlam Trail Corridor f — STATE ROUTE: #N/A
ROADWAY LIMITS: 0 — M.P. 0.000 TO 0.000 — ENGINEER: 0
STUDY PERIOD: FROM 1/ 2013 TO 12/ 2013 — COUNTY: Miami-Dade

No.	MILE POST	DATE	DAY	TIME	CRASH TYPE	FATAL	INJURIES	PROP DAM	DAY / NIGHT	WET / DRY	CONTRIBUTING CAUSE (VEHICLE ONLY)
760	0.000	09/09/13	Tue	1215	Left-Turn	0	0	1	Day	Dry	Not Coded
761	0.000	09/09/13	Tue	0751	Angle	0	1	0	Day	Dry	Not Coded
762	0.000	09/09/13	Tue	1615	Left-Turn	0	0	1	Day	Dry	Not Coded
763	0.000	09/09/13	Tue	1720	Left-Turn	0	1	0	Day	Dry	Not Coded
764	0.000	09/10/13	Wed	1158	Angle	0	0	1	Day	Dry	Not Coded
765	0.000	09/10/13	Wed	1814	Sideswipe	0	0	1	Day	Dry	Not Coded
766	0.000	09/10/13	Wed	1549	Left-Turn	0	1	0	Day	Dry	Not Coded
767	0.000	09/10/13	Wed	0726	Left-Turn	0	0	1	Day	Wet	Not Coded
768	0.000	09/11/13	Thu	1731	Left-Turn	0	1	0	Day	Wet	Not Coded
769	0.000	09/11/13	Thu	1402	Rear-End	0	0	1	Day	Wet	Not Coded
770	0.000	09/12/13	Fri	1744	Sideswipe	0	0	1	Day	Dry	Not Coded
771	0.000	09/12/13	Fri	0946	Angle	0	0	1	Day	Dry	Not Coded
772	0.000	09/13/13	Sat	1810	Sideswipe	0	0	1	Night	Dry	Not Coded
773	0.000	09/13/13	Sat	1737	Backed Into	0	0	1	Day	Dry	Not Coded
774	0.000	09/13/13	Sat	1611	Backed Into	0	0	1	Day	Dry	Not Coded
775	0.000	09/13/13	Sat	1608	Not Coded	0	0	1	Unknown	Other	Not Coded
776	0.000	09/13/13	Sat	0913	Rear-End	0	0	1	Day	Dry	Not Coded
777	0.000	09/13/13	Sat	0734	Backed Into	0	0	1	Day	Dry	Not Coded
778	0.000	09/13/13	Sat	1341	Rear-End	0	0	1	Day	Dry	Not Coded
779	0.000	09/14/13	Sun	1600	Rear-End	0	1	0	Day	Dry	Not Coded
780	0.000	09/14/13	Sun	1258	Rear-End	0	0	1	Day	Dry	Not Coded
781	0.000	09/14/13	Sun	2145	Angle	0	0	1	Night	Dry	Not Coded
782	0.000	09/14/13	Sun	1225	Rear-End	0	0	1	Day	Dry	Not Coded
783	0.000	09/14/13	Sun	1210	Angle	0	1	0	Day	Dry	Not Coded
784	0.000	09/14/13	Sun	0745	Not Coded	0	0	1	Day	Dry	Not Coded
785	0.000	09/15/13	Mon	1700	Left-Turn	0	0	1	Day	Wet	Not Coded
786	0.000	09/15/13	Mon	2042	Parked Motor Vehicle	0	1	0	Night	Wet	Not Coded
787	0.000	09/15/13	Mon	1925	Rear-End	0	0	1	Night	Wet	Not Coded
788	0.000	09/15/13	Mon	1125	Rear-End	0	0	1	Day	Wet	Not Coded
789	0.000	09/15/13	Mon	1034	Angle	0	0	1	Day	Dry	Not Coded
790	0.000	09/16/13	Tue	1445	Rear-End	0	0	1	Day	Wet	Not Coded
791	0.000	09/16/13	Tue	1725	Backed Into	0	0	1	Day	Wet	Not Coded
792	0.000	09/16/13	Tue	1900	Rear-End	0	1	0	Night	Wet	Not Coded
793	0.000	09/16/13	Tue	1524	Parked Motor Vehicle	0	1	0	Day	Dry	Not Coded
794	0.000	09/17/13	Wed	1818	Pedestrian	0	0	1	Day	Wet	Not Coded
795	0.000	09/17/13	Wed	1854	Rear-End	0	0	1	Day	Wet	Not Coded
796	0.000	09/17/13	Wed	0818	Rear-End	0	0	1	Unknown	Other	Not Coded
797	0.000	09/18/13	Thu	1246	Sideswipe	0	0	1	Day	Dry	Not Coded
798	0.000	09/18/13	Thu	1246	Right-Turn	0	0	1	Day	Dry	Not Coded
799	0.000	09/18/13	Thu	1510	Rear-End	0	0	1	Day	Dry	Not Coded
800	0.000	09/18/13	Thu	1632	Left-Turn	0	0	1	Day	Dry	Not Coded
801	0.000	09/18/13	Thu	1745	Angle	0	0	1	Day	Dry	Not Coded
802	0.000	09/18/13	Thu	1300	Rear-End	0	0	1	Day	Dry	Not Coded
803	0.000	09/18/13	Thu	1814	Rear-End	0	1	0	Day	Dry	Not Coded
804	0.000	09/19/13	Fri	1100	Angle	0	0	1	Day	Dry	Not Coded
805	0.000	09/19/13	Fri	1817	Rear-End	0	0	1	Day	Dry	Not Coded
806	0.000	09/19/13	Fri	0856	Rear-End	0	0	1	Day	Dry	Not Coded
807	0.000	09/19/13	Fri	2041	Sideswipe	0	0	1	Night	Dry	Not Coded
808	0.000	09/20/13	Sat	1014	Rear-End	0	0	1	Day	Dry	Not Coded
809	0.000	09/20/13	Sat	0635	Rear-End	0	0	1	Day	Dry	Not Coded
810	0.000	09/20/13	Sat	1234	Left-Turn	0	0	1	Day	Dry	Not Coded
811	0.000	09/20/13	Sat	1750	Sideswipe	0	1	0	Day	Dry	Not Coded
812	0.000	09/20/13	Sat	0925	Rear-End	0	0	1	Day	Dry	Not Coded
813	0.000	09/21/13	Sun	0610	Not Coded	0	0	1	Night	Dry	Not Coded
814	0.000	09/21/13	Sun	1455	Rear-End	0	1	0	Day	Dry	Not Coded
815	0.000	09/22/13	Mon	1500	Rear-End	0	0	1	Day	Dry	Not Coded
816	0.000	09/22/13	Mon	0916	Rear-End	0	0	1	Day	Dry	Not Coded
817	0.000	09/23/13	Tue	1425	Left-Turn	0	0	1	Day	Wet	Not Coded
818	0.000	09/23/13	Tue	1255	Sideswipe	0	0	1	Day	Wet	Not Coded
819	0.000	09/23/13	Tue	1200	Angle	0	0	1	Day	Dry	Not Coded
820	0.000	09/23/13	Tue	2115	Sideswipe	0	0	1	Night	Dry	Not Coded
821	0.000	09/24/13	Wed	1137	Angle	0	0	1	Day	Dry	Not Coded
822	0.000	09/24/13	Wed	1430	Not Coded	0	0	1	Day	Dry	Not Coded
823	0.000	09/24/13	Wed	1610	Rear-End	0	0	1	Day	Dry	Not Coded
824	0.000	09/24/13	Wed	1740	Angle	0	0	1	Day	Wet	Not Coded
825	0.000	09/25/13	Thu	0900	Rear-End	0	0	1	Day	Dry	Not Coded
826	0.000	09/25/13	Thu	1415	Backed Into	0	0	1	Day	Dry	Not Coded
827	0.000	09/25/13	Thu	0830	Rear-End	0	0	1	Day	Dry	Not Coded
828	0.000	09/25/13	Thu	2238	Not Coded	0	0	1	Night	Dry	Not Coded

State of Florida Department of Transportation
CRASH SUMMARY

SECTION: Ludlam Trail Corridor f — STATE ROUTE: #N/A
ROADWAY LIMITS: 0 — M.P. 0.000 TO 0.000 — ENGINEER: 0
STUDY PERIOD: FROM 1/ 2013 TO 12/ 2013 — COUNTY: Miami-Dade

No.	MILE POST	DATE	DAY	TIME	CRASH TYPE	FATAL	INJURIES	PROP DAM	DAY / NIGHT	WET / DRY	CONTRIBUTING CAUSE (VEHICLE ONLY)
829	0.000	09/25/13	Thu	0838	Rear-End	0	0	1	Day	Dry	Not Coded
830	0.000	09/25/13	Thu	1535	Rear-End	0	0	1	Day	Wet	Not Coded
831	0.000	09/25/13	Thu	0747	Rear-End	0	0	1	Day	Dry	Not Coded
832	0.000	09/26/13	Fri	1820	Rear-End	0	0	1	Day	Wet	Not Coded
833	0.000	09/26/13	Fri	1721	Rear-End	0	0	1	Day	Wet	Not Coded
834	0.000	09/26/13	Fri	1545	Sideswipe	0	0	1	Day	Wet	Not Coded
835	0.000	09/26/13	Fri	1930	Rear-End	0	0	1	Night	Dry	Not Coded
836	0.000	09/26/13	Fri	2010	Rear-End	0	0	1	Night	Dry	Not Coded
837	0.000	09/26/13	Fri	1105	Angle	0	0	1	Day	Dry	Not Coded
838	0.000	09/26/13	Fri	1225	Rear-End	0	0	1	Day	Dry	Not Coded
839	0.000	09/27/13	Sat	2215	Rear-End	0	1	0	Night	Dry	Not Coded
840	0.000	09/27/13	Sat	2050	Sideswipe	0	0	1	Night	Dry	Not Coded
841	0.000	09/27/13	Sat	1100	Sideswipe	0	0	1	Day	Dry	Not Coded
842	0.000	09/27/13	Sat	0803	Sideswipe	0	0	1	Day	Dry	Not Coded
843	0.000	09/27/13	Sat	0830	Rear-End	0	0	1	Day	Dry	Not Coded
844	0.000	09/27/13	Sat	1030	Rear-End	0	0	1	Day	Dry	Not Coded
845	0.000	09/27/13	Sat	0835	Rear-End	0	0	1	Day	Dry	Not Coded
846	0.000	09/28/13	Sun	1540	Backed Into	0	0	1	Day	Dry	Not Coded
847	0.000	09/28/13	Sun	1100	Rear-End	0	1	0	Day	Dry	Not Coded
848	0.000	09/28/13	Sun	1058	Angle	0	0	1	Day	Dry	Not Coded
849	0.000	09/28/13	Sun	0830	Sideswipe	0	0	1	Day	Dry	Not Coded
850	0.000	09/29/13	Mon	0731	Sideswipe	0	0	1	Day	Dry	Not Coded
851	0.000	09/29/13	Mon	2042	Rear-End	0	0	1	Night	Dry	Not Coded
852	0.000	09/30/13	Tue	0840	Rear-End	0	0	1	Day	Dry	Not Coded
853	0.000	09/30/13	Tue	1730	Rear-End	0	0	1	Day	Dry	Not Coded
854	0.000	10/01/13	Wed	2049	Parked Motor Vehicle	0	0	1	Night	Dry	Not Coded
855	0.000	10/01/13	Wed	1730	Angle	0	1	0	Day	Dry	Not Coded
856	0.000	10/02/13	Thu	2020	Left-Turn	0	0	1	Night	Wet	Not Coded
857	0.000	10/02/13	Thu	0900	Rear-End	0	0	1	Day	Dry	Not Coded
858	0.000	10/02/13	Thu	2156	Rear-End	0	1	0	Night	Wet	Not Coded
859	0.000	10/03/13	Fri	1310	Angle	0	1	0	Day	Dry	Not Coded
860	0.000	10/03/13	Fri	2056	Angle	0	0	1	Day	Dry	Not Coded
861	0.000	10/03/13	Fri	1246	Left-Turn	0	0	1	Day	Dry	Not Coded
862	0.000	10/03/13	Fri	0705	Parked Motor Vehicle	0	0	1	Day	Dry	Not Coded
863	0.000	10/04/13	Sat	1650	Rear-End	0	0	1	Day	Dry	Not Coded
864	0.000	10/04/13	Sat	0800	Angle	0	0	1	Day	Dry	Not Coded
865	0.000	10/05/13	Sun	1744	Right-Turn	0	0	1	Day	Dry	Not Coded
866	0.000	10/05/13	Sun	1630	Left-Turn	0	0	1	Day	Dry	Not Coded
867	0.000	10/07/13	Tue	1459	Rear-End	0	0	1	Day	Dry	Not Coded
868	0.000	10/07/13	Tue	1151	Rear-End	0	0	1	Day	Dry	Not Coded
869	0.000	10/07/13	Tue	1522	Backed Into	0	0	1	Day	Wet	Not Coded
870	0.000	10/08/13	Wed	1110	Sideswipe	0	1	0	Day	Dry	Not Coded
871	0.000	10/08/13	Wed	0825	Rear-End	0	0	1	Day	Dry	Not Coded
872	0.000	10/08/13	Wed	0920	Left-Turn	0	0	1	Day	Dry	Not Coded
873	0.000	10/09/13	Thu	0945	Rear-End	0	0	1	Day	Dry	Not Coded
874	0.000	10/09/13	Thu	1205	Left-Turn	0	0	1	Day	Dry	Not Coded
875	0.000	10/09/13	Thu	2026	Left-Turn	0	1	0	Night	Dry	Not Coded
876	0.000	10/09/13	Thu	1615	Rear-End	0	0	1	Day	Dry	Not Coded
877	0.000	10/09/13	Thu	1445	Rear-End	0	0	1	Day	Dry	Not Coded
878	0.000	10/09/13	Thu	1024	Angle	0	0	1	Day	Dry	Not Coded
879	0.000	10/10/13	Fri	0755	Sideswipe	0	0	1	Day	Dry	Not Coded
880	0.000	10/10/13	Fri	0758	Backed Into	0	0	1	Day	Dry	Not Coded
881	0.000	10/10/13	Fri	1749	Angle	0	0	1	Day	Dry	Not Coded
882	0.000	10/10/13	Fri	1518	Angle	0	0	1	Day	Dry	Not Coded
883	0.000	10/11/13	Sat	1305	Rear-End	0	0	1	Day	Dry	Not Coded
884	0.000	10/11/13	Sat	1645	Rear-End	0	0	1	Night	Wet	Not Coded
885	0.000	10/11/13	Sat	2200	Rear-End	0	0	1	Night	Dry	Not Coded
886	0.000	10/11/13	Sat	1145	Parked Motor Vehicle	0	0	1	Day	Dry	Not Coded
887	0.000	10/11/13	Sat	1600	Angle	0	0	1	Day	Dry	Not Coded
888	0.000	10/11/13	Sat	1155	Rear-End	0	1	0	Day	Dry	Not Coded
889	0.000	10/11/13	Sat	0904	Parked Motor Vehicle	0	0	1	Day	Dry	Not Coded
890	0.000	10/11/13	Sat	2020	Angle	0	0	1	Night	Dry	Not Coded
891	0.000	10/12/13	Sun	1735	Angle	0	1	0	Day	Dry	Not Coded
892	0.000	10/12/13	Sun	1005	Parked Motor Vehicle	0	0	1	Day	Dry	Not Coded
893	0.000	10/13/13	Mon	0140	Rear-End	0	0	1	Day	Dry	Not Coded
894	0.000	10/13/13	Mon	2115	Sideswipe	0	0	1	Night	Dry	Not Coded
895	0.000	10/13/13	Mon	1042	Backed Into	0	0	1	Day	Dry	Not Coded
896	0.000	10/15/13	Wed	0730	Sideswipe	0	1	0	Day	Dry	Not Coded
897	0.000	10/15/13	Wed	2200	Rear-End	0	1	0	Night	Dry	Not Coded

State of Florida Department of Transportation
CRASH SUMMARY

SECTION: Ludlam Trail Corridor f — STATE ROUTE: #N/A
ROADWAY LIMITS: 0 — M.P. 0.000 TO 0.000 — ENGINEER: 0
STUDY PERIOD: FROM 1/ 2013 TO 12/ 2013 — COUNTY: Miami-Dade

No.	MILE POST	DATE	DAY	TIME	CRASH TYPE	FATAL	INJURIES	PROP DAM	DAY / NIGHT	WET / DRY	CONTRIBUTING CAUSE (VEHICLE ONLY)
898	0.000	10/15/13	Wed	1200	Rear-End	0	0	1	Day	Dry	Not Coded
899	0.000	10/15/13	Wed	2300	Left-Turn	0	0	1	Night	Dry	Not Coded
900	0.000	10/15/13	Wed	1735	Angle	0	1	0	Day	Dry	Not Coded
901	0.000	10/16/13	Thu	0802	Sideswipe	0	0	1	Day	Dry	Not Coded
902	0.000	10/16/13	Thu	1800	Left-Turn	0	0	1	Day	Dry	Not Coded
903	0.000	10/16/13	Thu	1334	Rear-End	0	0	1	Day	Dry	Not Coded
904	0.000	10/16/13	Thu	1607	Not Coded	0	0	1	Day	Dry	Not Coded
905	0.000	10/16/13	Thu	0336	Rear-End	0	0	1	Day	Dry	Not Coded
906	0.000	10/17/13	Fri	1705	Angle	0	1	0	Day	Dry	Not Coded
907	0.000	10/17/13	Fri	1347	Sideswipe	0	0	1	Day	Dry	Not Coded
908	0.000	10/17/13	Fri	1547	Rear-End	0	0	1	Day	Dry	Not Coded
909	0.000	10/17/13	Fri	1550	Rear-End	0	0	1	Day	Dry	Not Coded
910	0.000	10/17/13	Fri	2240	Sideswipe	0	0	1	Night	Dry	Not Coded
911	0.000	10/17/13	Fri	1112	Rear-End	0	0	1	Day	Dry	Not Coded
912	0.000	10/18/13	Sat	0855	Angle	0	0	1	Day	Dry	Not Coded
913	0.000	10/18/13	Sat	1300	Pedalcycle	0	0	1	Day	Dry	Not Coded
914	0.000	10/18/13	Sat	0559	Angle	0	0	1	Night	Dry	Not Coded
915	0.000	10/18/13	Sat	1606	Rear-End	0	0	1	Day	Dry	Not Coded
916	0.000	10/18/13	Sat	1525	Head-On	0	1	0	Day	Dry	Not Coded
917	0.000	10/19/13	Sun	2305	Rear-End	0	0	1	Night	Dry	Not Coded
918	0.000	10/19/13	Sun	0150	Right-Turn	0	1	0	Night	Dry	Not Coded
919	0.000	10/20/13	Mon	1720	Angle	0	0	1	Day	Wet	Not Coded
920	0.000	10/20/13	Mon	1240	Left-Turn	0	0	1	Day	Dry	Not Coded
921	0.000	10/20/13	Mon	2008	Backed Into	0	0	1	Night	Wet	Not Coded
922	0.000	10/21/13	Tue	0015	Backed Into	0	1	0	Night	Dry	Not Coded
923	0.000	10/21/13	Tue	0758	Sideswipe	0	1	0	Day	Dry	Not Coded
924	0.000	10/21/13	Tue	1537	Sideswipe	0	0	1	Day	Dry	Not Coded
925	0.000	10/22/13	Wed	1313	Rear-End	0	0	1	Day	Wet	Not Coded
926	0.000	10/22/13	Wed	0709	Angle	0	0	1	Day	Dry	Not Coded
927	0.000	10/22/13	Wed	1644	Rear-End	0	0	1	Day	Dry	Not Coded
928	0.000	10/22/13	Wed	1736	Left-Turn	0	0	1	Day	Dry	Not Coded
929	0.000	10/22/13	Wed	2018	Rear-End	0	0	1	Night	Dry	Not Coded
930	0.000	10/22/13	Wed	0749	Sideswipe	0	0	1	Day	Dry	Not Coded
931	0.000	10/22/13	Wed	1550	Left-Turn	0	1	0	Day	Dry	Not Coded
932	0.000	10/22/13	Wed	1550	Rear-End	0	1	0	Day	Dry	Not Coded
933	0.000	10/23/13	Thu	1215	Left-Turn	0	0	1	Day	Dry	Not Coded
934	0.000	10/23/13	Thu	1739	Overturn/Rollover	0	0	1	Day	Dry	Not Coded
935	0.000	10/23/13	Thu	0817	Left-Turn	0	1	0	Day	Dry	Not Coded
936	0.000	10/23/13	Thu	1807	Parked Motor Vehicle	0	0	1	Day	Wet	Not Coded
937	0.000	10/23/13	Thu	1324	Left-Turn	0	0	1	Day	Wet	Not Coded
938	0.000	10/24/13	Fri	2110	Rear-End	0	1	0	Night	Dry	Not Coded
939	0.000	10/24/13	Fri	2100	Head-On	0	0	1	Night	Wet	Not Coded
940	0.000	10/24/13	Fri	2040	Sideswipe	0	0	1	Night	Dry	Not Coded
941	0.000	10/25/13	Sat	1318	Rear-End	0	0	1	Day	Dry	Not Coded
942	0.000	10/26/13	Sun	1054	Rear-End	0	0	1	Day	Dry	Not Coded
943	0.000	10/26/13	Sun	2328	Rear-End	0	0	1	Night	Dry	Not Coded
944	0.000	10/26/13	Sun	1300	Angle	0	0	1	Day	Dry	Not Coded
945	0.000	10/28/13	Tue	1710	Angle	0	0	1	Day	Dry	Not Coded
946	0.000	10/28/13	Tue	1158	Angle	0	1	0	Day	Dry	Not Coded
947	0.000	10/28/13	Tue	1545	Backed Into	0	0	1	Day	Dry	Not Coded
948	0.000	10/28/13	Tue	1426	Rear-End	0	1	0	Day	Dry	Not Coded
949	0.000	10/28/13	Tue	1730	Rear-End	0	0	1	Day	Dry	Not Coded
950	0.000	10/28/13	Tue	1708	Left-Turn	0	0	1	Day	Dry	Not Coded
951	0.000	10/28/13	Tue	0825	Left-Turn	0	1	0	Day	Dry	Not Coded
952	0.000	10/28/13	Tue	2009	Left-Turn	0	0	1	Night	Dry	Not Coded
953	0.000	10/28/13	Tue	1748	Rear-End	0	0	1	Day	Dry	Not Coded
954	0.000	10/29/13	Wed	1807	Angle	0	0	1	Day	Dry	Not Coded
955	0.000	10/29/13	Wed	1656	Backed Into	0	0	1	Day	Dry	Not Coded
956	0.000	10/29/13	Wed	0132	Left-Turn	1	0	0	Unknown	Wet	Not Coded
957	0.000	10/29/13	Wed	1815	Rear-End	0	0	1	Night	Dry	Not Coded
958	0.000	10/29/13	Wed	0910	Angle	0	0	1	Day	Dry	Not Coded
959	0.000	10/30/13	Thu	1605	Rear-End	0	0	1	Day	Dry	Not Coded
960	0.000	10/30/13	Thu	1650	Angle	0	0	1	Day	Dry	Not Coded
961	0.000	10/30/13	Thu	1710	Rear-End	0	0	1	Day	Dry	Not Coded
962	0.000	10/30/13	Thu	1501	Angle	0	0	1	Day	Dry	Not Coded
963	0.000	10/30/13	Thu	1840	Rear-End	0	1	0	Day	Dry	Not Coded
964	0.000	10/31/13	Fri	2233	Sideswipe	0	0	1	Night	Dry	Not Coded
965	0.000	10/31/13	Fri	1645	Rear-End	0	0	1	Day	Dry	Not Coded
966	0.000	10/31/13	Fri	2223	Overturn/Rollover	0	0	1	Night	Dry	Not Coded

State of Florida Department of Transportation
CRASH SUMMARY

SECTION: Ludlam Trail Corridor f — STATE ROUTE: #N/A
ROADWAY LIMITS: 0 — M.P. 0.000 TO 0.000 — ENGINEER: 0
STUDY PERIOD: FROM 1/ 2013 TO 12/ 2013 — COUNTY: Miami-Dade

No.	MILE POST	DATE	DAY	TIME	CRASH TYPE	FATAL	INJURIES	PROP DAM	DAY / NIGHT	WET / DRY	CONTRIBUTING CAUSE (VEHICLE ONLY)
967	0.000	10/31/13	Fri	1725	Head-On	0	0	1	Day	Dry	Not Coded
968	0.000	10/31/13	Fri	2254	Angle	0	0	1	Night	Dry	Not Coded
969	0.000	11/01/13	Sat	1703	Left-Turn	0	0	1	Day	Dry	Not Coded
970	0.000	11/01/13	Sat	2220	Rear-End	0	0	1	Night	Dry	Not Coded
971	0.000	11/01/13	Sat	1250	Angle	0	0	1	Day	Dry	Not Coded
972	0.000	11/01/13	Sat	0230	Angle	0	0	1	Day	Dry	Not Coded
973	0.000	11/01/13	Sat	0905	Angle	0	0	1	Day	Dry	Not Coded
974	0.000	11/01/13	Sat	0500	Sideswipe	0	0	1	Night	Dry	Not Coded
975	0.000	11/02/13	Sun	1900	Rear-End	0	1	0	Night	Dry	Not Coded
976	0.000	11/03/13	Mon	1615	Rear-End	0	0	1	Day	Dry	Not Coded
977	0.000	11/04/13	Tue	1351	Left-Turn	0	0	1	Day	Dry	Not Coded
978	0.000	11/04/13	Tue	1820	Rear-End	0	0	1	Night	Wet	Not Coded
979	0.000	11/04/13	Tue	1255	Rear-End	0	1	0	Day	Dry	Not Coded
980	0.000	11/04/13	Tue	0920	Left-Turn	0	0	1	Day	Dry	Not Coded
981	0.000	11/04/13	Tue	1533	Angle	0	0	1	Day	Wet	Not Coded
982	0.000	11/05/13	Wed	1341	Pedestrian	0	1	0	Day	Dry	Not Coded
983	0.000	11/05/13	Wed	1855	Sideswipe	0	0	1	Night	Dry	Not Coded
984	0.000	11/05/13	Wed	2219	Not Coded	0	0	1	Night	Dry	Not Coded
985	0.000	11/06/13	Thu	0825	Angle	0	0	1	Day	Dry	Not Coded
986	0.000	11/06/13	Thu	0851	Sideswipe	0	1	0	Day	Dry	Not Coded
987	0.000	11/06/13	Thu	1840	Rear-End	0	0	1	Day	Dry	Not Coded
988	0.000	11/06/13	Thu	1521	Parked Motor Vehicle	0	0	1	Day	Dry	Not Coded
989	0.000	11/07/13	Fri	0800	Rear-End	0	0	1	Day	Dry	Not Coded
990	0.000	11/07/13	Fri	1644	Left-Turn	0	0	1	Day	Dry	Not Coded
991	0.000	11/07/13	Fri	1501	Angle	0	0	1	Day	Dry	Not Coded
992	0.000	11/07/13	Fri	1030	Rear-End	0	0	1	Day	Dry	Not Coded
993	0.000	11/07/13	Fri	1550	Sideswipe	0	0	1	Day	Dry	Not Coded
994	0.000	11/08/13	Sat	1830	Sideswipe	0	1	0	Night	Dry	Not Coded
995	0.000	11/08/13	Sat	1552	Left-Turn	0	0	1	Day	Dry	Not Coded
996	0.000	11/08/13	Sat	1507	Rear-End	0	0	1	Day	Dry	Not Coded
997	0.000	11/08/13	Sat	1859	Rear-End	0	1	0	Night	Dry	Not Coded
998	0.000	11/08/13	Sat	0845	Overturn/Rollover	0	1	0	Day	Dry	Not Coded
999	0.000	11/08/13	Sat	1535	Left-Turn	0	0	1	Day	Dry	Not Coded
1000	0.000	12/31/13	Wed	1542	Rear-End	0	0	1	Day	Dry	Not Coded
1001	0.000	11/08/13	Sat	1841	Sideswipe	0	0	1	Night	Dry	Not Coded
1002	0.000	11/09/13	Sun	0744	Sideswipe	0	0	1	Day	Wet	Not Coded
1003	0.000	11/09/13	Sun	1100	Rear-End	0	0	1	Day	Dry	Not Coded
1004	0.000	11/09/13	Sun	1744	Left-Turn	0	0	1	Day	Wet	Not Coded
1005	0.000	11/09/13	Sun	1257	Left-Turn	0	0	1	Day	Dry	Not Coded
1173	0.000	11/10/13	Mon	1806	Rear-End	0	1	0	Night	Dry	Not Coded
1007	0.000	11/11/13	Tue	1355	Sideswipe	0	0	1	Day	Dry	Not Coded
1008	0.000	11/12/13	Wed	0750	Rear-End	0	0	1	Day	Dry	Not Coded
1009	0.000	11/12/13	Wed	1552	Angle	0	1	0	Day	Dry	Not Coded
1010	0.000	11/12/13	Wed	1020	Angle	0	0	1	Day	Dry	Not Coded
1011	0.000	11/12/13	Wed	2204	Angle	0	0	1	Night	Dry	Not Coded
1012	0.000	11/12/13	Wed	1938	Parked Motor Vehicle	0	0	1	Night	Dry	Not Coded
1013	0.000	11/13/13	Thu	1530	Left-Turn	0	0	1	Day	Dry	Not Coded
1014	0.000	11/13/13	Thu	1840	Left-Turn	0	0	1	Night	Dry	Not Coded
1015	0.000	11/13/13	Thu	0718	Parked Motor Vehicle	0	1	0	Day	Dry	Not Coded
1016	0.000	11/13/13	Thu	1802	Rear-End	0	0	1	Night	Dry	Not Coded
1017	0.000	11/14/13	Fri	1857	Rear-End	0	1	0	Night	Dry	Not Coded
1018	0.000	11/14/13	Fri	1120	Parked Motor Vehicle	0	1	0	Day	Dry	Not Coded
1019	0.000	11/14/13	Fri	1235	Left-Turn	0	0	1	Day	Dry	Not Coded
1020	0.000	11/14/13	Fri	1220	Sideswipe	0	0	1	Day	Dry	Not Coded
1021	0.000	11/15/13	Sat	0840	Left-Turn	0	0	1	Day	Dry	Not Coded
1022	0.000	11/15/13	Sat	1518	Rear-End	0	0	1	Day	Dry	Not Coded
1023	0.000	11/15/13	Sat	0339	Angle	0	1	0	Night	Dry	Not Coded
1024	0.000	11/15/13	Sat	1614	Left-Turn	0	1	0	Day	Dry	Not Coded
1025	0.000	11/15/13	Sat	1810	Left-Turn	0	0	1	Night	Dry	Not Coded
1026	0.000	11/15/13	Sat	1435	Left-Turn	0	0	1	Day	Dry	Not Coded
1027	0.000	11/16/13	Sun	1138	Rear-End	0	1	0	Day	Dry	Not Coded
1028	0.000	11/16/13	Sun	0220	Rear-End	0	0	1	Day	Dry	Not Coded
1029	0.000	11/16/13	Sun	1245	Rear-End	0	0	1	Unknown	Other	Not Coded
1030	0.000	11/17/13	Mon	1917	Rear-End	0	1	0	Night	Dry	Not Coded
1031	0.000	11/18/13	Tue	0653	Rear-End	0	0	1	Day	Dry	Not Coded
1032	0.000	11/18/13	Tue	2052	Rear-End	0	1	0	Night	Dry	Not Coded
1033	0.000	11/18/13	Tue	1724	Angle	0	0	1	Night	Dry	Not Coded
1034	0.000	11/18/13	Tue	1829	Left-Turn	0	1	0	Night	Dry	Not Coded
1035	0.000	11/18/13	Tue	0926	Left-Turn	0	0	1	Day	Dry	Not Coded

State of Florida Department of Transportation
CRASH SUMMARY

SECTION: Ludlam Trail Corridor f — STATE ROUTE: #N/A
ROADWAY LIMITS: 0 — M.P. 0.000 TO 0.000 — ENGINEER: 0
STUDY PERIOD: FROM 1/ 2013 TO 12/ 2013 — COUNTY: Miami-Dade

No.	MILE POST	DATE	DAY	TIME	CRASH TYPE	FATAL	INJURIES	PROP DAM	DAY / NIGHT	WET / DRY	CONTRIBUTING CAUSE (VEHICLE ONLY)
1036	0.000	11/19/13	Wed	1925	Rear-End	0	0	1	Night	Wet	Not Coded
1037	0.000	11/19/13	Wed	0900	Rear-End	0	0	1	Day	Dry	Not Coded
1038	0.000	11/19/13	Wed	1857	Pedalcycle	0	0	1	Night	Wet	Not Coded
1039	0.000	11/19/13	Wed	1653	Left-Turn	0	0	1	Night	Wet	Not Coded
1040	0.000	11/19/13	Wed	1845	Angle	0	0	1	Night	Wet	Not Coded
1041	0.000	11/20/13	Thu	0210	Rear-End	0	0	1	Day	Dry	Not Coded
1042	0.000	11/20/13	Thu	1718	Rear-End	0	0	1	Day	Dry	Not Coded
1043	0.000	11/20/13	Thu	1735	Rear-End	0	0	1	Night	Dry	Not Coded
1044	0.000	11/20/13	Thu	1710	Rear-End	0	0	1	Night	Dry	Not Coded
1045	0.000	11/20/13	Thu	1530	Angle	0	0	1	Day	Dry	Not Coded
1046	0.000	11/20/13	Thu	1608	Rear-End	0	0	1	Day	Dry	Not Coded
1047	0.000	11/21/13	Fri	1819	Angle	0	1	0	Night	Wet	Not Coded
1048	0.000	11/21/13	Fri	1538	Rear-End	0	0	1	Day	Dry	Not Coded
1049	0.000	11/21/13	Fri	1943	Parked Motor Vehicle	0	0	1	Day	Wet	Not Coded
1050	0.000	11/21/13	Fri	1102	Pedestrian	0	0	1	Day	Dry	Not Coded
1051	0.000	11/21/13	Fri	2120	Sideswipe	0	0	1	Night	Wet	Not Coded
1052	0.000	11/22/13	Sat	0934	Rear-End	0	0	1	Day	Wet	Not Coded
1053	0.000	11/22/13	Sat	0700	Sideswipe	0	0	1	Day	Wet	Not Coded
1054	0.000	11/22/13	Sat	1615	Angle	0	0	1	Day	Wet	Not Coded
1055	0.000	11/22/13	Sat	2200	Angle	0	0	1	Night	Wet	Not Coded
1056	0.000	11/22/13	Sat	0700	Angle	0	0	1	Night	Wet	Not Coded
1057	0.000	11/22/13	Sat	1918	Not Coded	0	0	1	Night	Wet	Not Coded
1058	0.000	11/22/13	Sat	0727	Sideswipe	0	0	1	Day	Wet	Not Coded
1059	0.000	11/22/13	Sat	1801	Pedestrian	0	0	1	Night	Wet	Not Coded
1060	0.000	11/22/13	Sat	0803	Rear-End	0	1	0	Day	Dry	Not Coded
1061	0.000	11/22/13	Sat	2148	Rear-End	0	1	0	Night	Wet	Not Coded
1062	0.000	11/22/13	Sat	1820	Sideswipe	0	0	1	Night	Wet	Not Coded
1063	0.000	11/22/13	Sat	1811	Rear-End	0	0	1	Night	Wet	Not Coded
1064	0.000	11/22/13	Sat	1332	Rear-End	0	0	1	Day	Dry	Not Coded
1065	0.000	11/23/13	Sun	0705	Sideswipe	0	0	1	Day	Wet	Not Coded
1066	0.000	11/23/13	Sun	1227	Rear-End	0	0	1	Day	Wet	Not Coded
1067	0.000	11/24/13	Mon	1410	Rear-End	0	1	0	Day	Dry	Not Coded
1068	0.000	11/24/13	Mon	1843	Left-Turn	0	0	1	Night	Wet	Not Coded
1069	0.000	11/24/13	Mon	1030	Rear-End	0	0	1	Day	Dry	Not Coded
1070	0.000	11/24/13	Mon	0455	Sideswipe	0	1	0	Night	Dry	Not Coded
1071	0.000	11/24/13	Mon	1839	Rear-End	0	1	0	Night	Wet	Not Coded
1072	0.000	11/25/13	Tue	1425	Angle	0	0	1	Day	Dry	Not Coded
1073	0.000	11/25/13	Tue	1408	Not Coded	0	1	0	Day	Dry	Not Coded
1074	0.000	11/25/13	Tue	1315	Left-Turn	0	0	1	Day	Wet	Not Coded
1075	0.000	11/25/13	Tue	1350	Rear-End	0	1	0	Day	Wet	Not Coded
1076	0.000	11/26/13	Wed	0830	Not Coded	0	0	1	Day	Dry	Not Coded
1077	0.000	11/27/13	Thu	0025	Rear-End	0	0	1	Night	Wet	Not Coded
1078	0.000	11/27/13	Thu	1315	Angle	0	0	1	Day	Dry	Not Coded
1079	0.000	11/27/13	Thu	1645	Angle	0	0	1	Day	Dry	Not Coded
1080	0.000	11/27/13	Thu	1700	Sideswipe	0	0	1	Night	Dry	Not Coded
1081	0.000	11/27/13	Thu	0100	Rear-End	0	1	0	Night	Wet	Not Coded
1082	0.000	11/27/13	Thu	0712	Left-Turn	0	0	1	Unknown	Other	Not Coded
1083	0.000	11/27/13	Thu	1913	Angle	0	0	1	Night	Dry	Not Coded
1084	0.000	11/29/13	Sat	0935	Sideswipe	0	0	1	Day	Dry	Not Coded
1085	0.000	11/30/13	Sun	1307	Angle	0	1	0	Day	Dry	Not Coded
1086	0.000	11/30/13	Sun	1202	Angle	0	0	1	Day	Dry	Not Coded
1087	0.000	12/01/13	Mon	1445	Left-Turn	0	1	0	Day	Dry	Not Coded
1088	0.000	12/01/13	Mon	1853	Left-Turn	0	0	1	Night	Wet	Not Coded
1089	0.000	12/01/13	Mon	1205	Backed Into	0	1	0	Day	Dry	Not Coded
1090	0.000	12/02/13	Tue	1045	Angle	0	0	1	Day	Dry	Not Coded
1091	0.000	12/02/13	Tue	1338	Sideswipe	0	0	1	Day	Dry	Not Coded
1092	0.000	12/02/13	Tue	1802	Rear-End	0	0	1	Night	Dry	Not Coded
1093	0.000	12/03/13	Wed	1330	Rear-End	0	0	1	Day	Dry	Not Coded
1094	0.000	12/03/13	Wed	1450	Sideswipe	0	0	1	Day	Dry	Not Coded
1095	0.000	12/03/13	Wed	1730	Rear-End	0	0	1	Day	Dry	Not Coded
1096	0.000	12/03/13	Wed	2052	Rear-End	0	0	1	Night	Dry	Not Coded
1097	0.000	12/05/13	Fri	1007	Angle	0	0	1	Day	Dry	Not Coded
1098	0.000	12/05/13	Fri	2210	Angle	0	1	0	Night	Dry	Not Coded
1099	0.000	12/05/13	Fri	1230	Angle	0	0	1	Day	Dry	Not Coded
1100	0.000	12/05/13	Fri	1337	Sideswipe	0	0	1	Day	Dry	Not Coded
1101	0.000	12/06/13	Sat	1202	Rear-End	0	0	1	Day	Dry	Not Coded
1102	0.000	12/07/13	Sun	1133	Sideswipe	0	1	0	Day	Dry	Not Coded
1103	0.000	12/07/13	Sun	2214	Rear-End	0	1	0	Night	Wet	Not Coded
1104	0.000	12/07/13	Sun	1608	Left-Turn	0	0	1	Day	Dry	Not Coded

State of Florida Department of Transportation
CRASH SUMMARY

SECTION: Ludlam Trail Corridor f — STATE ROUTE: #N/A
ROADWAY LIMITS: 0 — M.P. 0.000 TO 0.000 — ENGINEER: 0
STUDY PERIOD: FROM 1/ 2013 TO 12/ 2013 — COUNTY: Miami-Dade

No.	MILE POST	DATE	DAY	TIME	CRASH TYPE	FATAL	INJURIES	PROP DAM	DAY / NIGHT	WET / DRY	CONTRIBUTING CAUSE (VEHICLE ONLY)
1105	0.000	12/07/13	Sun	1920	Rear-End	0	0	1	Night	Dry	Not Coded
1106	0.000	12/07/13	Sun	1700	Rear-End	0	0	1	Night	Dry	Not Coded
1107	0.000	12/09/13	Tue	1730	Left-Turn	0	0	1	Night	Dry	Not Coded
1108	0.000	12/09/13	Tue	1050	Rear-End	0	0	1	Day	Dry	Not Coded
1109	0.000	12/10/13	Wed	0646	Rear-End	0	0	1	Day	Dry	Not Coded
1110	0.000	12/10/13	Wed	1245	Angle	0	0	1	Day	Dry	Not Coded
1111	0.000	12/10/13	Wed	1851	Angle	0	1	0	Night	Dry	Not Coded
1112	0.000	12/10/13	Wed	2345	Sideswipe	0	0	1	Night	Dry	Not Coded
1113	0.000	12/11/13	Thu	1404	Angle	0	0	1	Day	Dry	Not Coded
1114	0.000	12/11/13	Thu	1847	Left-Turn	0	0	1	Night	Dry	Not Coded
1115	0.000	12/12/13	Fri	1547	Rear-End	0	0	1	Day	Dry	Not Coded
1116	0.000	12/12/13	Fri	1553	Rear-End	0	0	1	Day	Dry	Not Coded
1117	0.000	12/12/13	Fri	0756	Rear-End	0	0	1	Unknown	Other	Not Coded
1118	0.000	12/12/13	Fri	1200	Sideswipe	0	0	1	Day	Dry	Not Coded
1119	0.000	12/12/13	Fri	1634	Parked Motor Vehicle	0	0	1	Day	Dry	Not Coded
1120	0.000	12/12/13	Fri	0802	Sideswipe	0	0	1	Day	Dry	Not Coded
1121	0.000	12/12/13	Fri	1810	Left-Turn	0	0	1	Night	Dry	Not Coded
1122	0.000	12/13/13	Sat	0851	Sideswipe	0	0	1	Day	Dry	Not Coded
1123	0.000	12/13/13	Sat	1330	Rear-End	0	0	1	Day	Dry	Not Coded
1124	0.000	12/13/13	Sat	1945	Rear-End	0	0	1	Night	Wet	Not Coded
1125	0.000	12/13/13	Sat	0743	Rear-End	0	0	1	Day	Dry	Not Coded
1126	0.000	12/13/13	Sat	2108	Rear-End	0	0	1	Night	Dry	Not Coded
1127	0.000	12/15/13	Mon	1750	Guardrail Face	0	0	1	Night	Dry	Not Coded
1128	0.000	12/16/13	Tue	1530	Sideswipe	0	0	1	Day	Dry	Not Coded
1129	0.000	12/16/13	Tue	1547	Rear-End	0	0	1	Unknown	Other	Not Coded
1130	0.000	12/16/13	Tue	1412	Left-Turn	0	0	1	Day	Dry	Not Coded
1131	0.000	12/17/13	Wed	1522	Left-Turn	0	0	1	Day	Dry	Not Coded
1132	0.000	12/17/13	Wed	1205	Left-Turn	0	0	1	Day	Dry	Not Coded
1133	0.000	12/18/13	Thu	1610	Rear-End	0	0	1	Day	Dry	Not Coded
1134	0.000	12/18/13	Thu	0919	Angle	0	1	0	Day	Dry	Not Coded
1135	0.000	12/18/13	Thu	1245	Overturn/Rollover	0	0	1	Day	Dry	Not Coded
1136	0.000	12/18/13	Thu	1021	Rear-End	0	1	0	Day	Dry	Not Coded
1137	0.000	12/19/13	Fri	0800	Rear-End	0	0	1	Day	Dry	Not Coded
1138	0.000	12/19/13	Fri	1855	Not Coded	0	0	1	Night	Dry	Not Coded
1139	0.000	12/19/13	Fri	0910	Parked Motor Vehicle	0	0	1	Day	Dry	Not Coded
1140	0.000	12/19/13	Fri	1349	Rear-End	0	0	1	Day	Dry	Not Coded
1141	0.000	12/20/13	Sat	1215	Rear-End	0	0	1	Day	Dry	Not Coded
1142	0.000	12/20/13	Sat	1640	Angle	0	0	1	Day	Dry	Not Coded
1143	0.000	12/20/13	Sat	1143	Left-Turn	0	1	0	Day	Dry	Not Coded
1144	0.000	12/20/13	Sat	1320	Rear-End	0	0	1	Day	Dry	Not Coded
1145	0.000	12/20/13	Sat	1104	Left-Turn	0	0	1	Day	Dry	Not Coded
1146	0.000	12/20/13	Sat	2100	Rear-End	0	0	1	Day	Dry	Not Coded
1147	0.000	12/20/13	Sat	1530	Left-Turn	0	0	1	Day	Dry	Not Coded
1148	0.000	12/20/13	Sat	1200	Sideswipe	0	0	1	Day	Dry	Not Coded
1149	0.000	12/20/13	Sat	1346	Rear-End	0	0	1	Day	Dry	Not Coded
1150	0.000	12/20/13	Sat	1500	Other Non-Collision	0	0	1	Day	Dry	Not Coded
1151	0.000	12/21/13	Sun	0835	Angle	0	1	0	Day	Dry	Not Coded
1152	0.000	12/22/13	Mon	2357	Rear-End	0	0	1	Night	Dry	Not Coded
1153	0.000	12/23/13	Tue	1035	Rear-End	0	0	1	Day	Dry	Not Coded
1154	0.000	12/23/13	Tue	1222	Rear-End	0	0	1	Day	Dry	Not Coded
1155	0.000	12/24/13	Wed	0813	Angle	0	0	1	Day	Dry	Not Coded
1156	0.000	12/24/13	Wed	1432	Rear-End	0	1	0	Day	Dry	Not Coded
1157	0.000	12/26/13	Fri	1239	Rear-End	0	0	1	Day	Wet	Not Coded
1158	0.000	12/26/13	Fri	1720	Left-Turn	0	0	1	Night	Wet	Not Coded
1159	0.000	12/27/13	Sat	1530	Rear-End	0	0	1	Day	Wet	Not Coded
1160	0.000	12/29/13	Mon	0124	Sideswipe	0	1	0	Night	Dry	Not Coded
1161	0.000	12/30/13	Tue	1838	Angle	0	0	1	Night	Dry	Not Coded
1162	0.000	12/30/13	Tue	1037	Left-Turn	0	0	1	Day	Dry	Not Coded
1163	0.000	12/30/13	Tue	1540	Angle	0	1	0	Day	Dry	Not Coded
1164	0.000	12/31/13	Wed	1404	Rear-End	0	0	1	Day	Dry	Not Coded
1165	0.000	12/31/13	Wed	1050	Not Coded	0	0	1	Day	Dry	Not Coded
1166	0.000	12/31/13	Wed	1542	Right-Turn	0	0	1	Day	Dry	Not Coded
1167	0.000	12/31/13	Wed	1542	Rear-End	0	0	1	Day	Dry	Not Coded

Total No.	Fatal	Injury	PDO	Rear-End	Head-On	Angle	Left-Turn	Right-Turn	Sideswipe	Backed Into	Ped/Bike	Parked Car	Fixed Object	Ran into Water	Other
1167	**3**	**202**	**962**	**390**	**8**	**167**	**136**	**14**	**114**	**28**	**11**	**26**	**14**	**0**	**246**
Percent	*0.26%*	*17.31%*	*82.43%*	*33.42%*	*0.69%*	*14.31%*	*11.65%*	*1.20%*	*9.77%*	*2.40%*	*0.94%*	*2.23%*	*1.20%*	*0.00%*	*21.08%*

State of Florida Department of Transportation
CRASH SUMMARY

SECTION: Ludlam Trail Corridor f | STATE ROUTE: #N/A
ROADWAY LIMITS: 0 | M.P. 0.000 TO 0.000 | ENGINEER: 0
STUDY PERIOD: FROM 1/ 2014 TO 12/ 2014 | COUNTY: Miami-Dade

No.	MILE POST	DATE	DAY	TIME	CRASH TYPE	FATAL	INJURIES	PROP DAM	DAY / NIGHT	WET / DRY	CONTRIBUTING CAUSE (VEHICLE ONLY)
1	0.000	01/01/14	Thu	0501	Sideswipe	0	1	0	Night	Dry	Not Coded
2	0.000	01/02/14	Fri	1510	Rear-End	0	1	0	Day	Dry	Not Coded
3	0.000	01/02/14	Fri	1605	Sideswipe	0	1	0	Day	Dry	Not Coded
4	0.000	01/02/14	Fri	0827	Left-Turn	0	0	1	Day	Dry	Not Coded
5	0.000	01/03/14	Sat	1309	Rear-End	0	1	0	Day	Dry	Not Coded
6	0.000	01/03/14	Sat	1600	Rear-End	0	0	1	Day	Dry	Not Coded
7	0.000	01/03/14	Sat	1205	Rear-End	0	0	1	Day	Dry	Not Coded
8	0.000	01/03/14	Sat	0934	Rear-End	0	0	1	Day	Dry	Not Coded
9	0.000	01/03/14	Sat	2350	Angle	0	1	0	Night	Dry	Not Coded
10	0.000	01/04/14	Sun	1220	Rear-End	0	0	1	Day	Wet	Not Coded
11	0.000	01/04/14	Sun	1950	Angle	0	0	1	Night	Dry	Not Coded
12	0.000	01/04/14	Sun	1209	Backed Into	0	0	1	Day	Wet	Not Coded
13	0.000	01/05/14	Mon	1609	Rear-End	0	0	1	Day	Dry	Not Coded
14	0.000	01/06/14	Tue	1750	Rear-End	0	0	1	Night	Dry	Not Coded
15	0.000	01/06/14	Tue	1539	Left-Turn	0	0	1	Day	Wet	Not Coded
16	0.000	01/06/14	Tue	0843	Left-Turn	0	0	1	Unknown	Other	Not Coded
17	0.000	01/06/14	Tue	1200	Rear-End	0	0	1	Day	Dry	Not Coded
18	0.000	01/06/14	Tue	1445	Rear-End	0	1	0	Day	Wet	Not Coded
19	0.000	01/07/14	Wed	1843	Rear-End	0	0	1	Night	Dry	Not Coded
20	0.000	01/08/14	Thu	1630	Rear-End	0	0	1	Day	Wet	Not Coded
21	0.000	01/08/14	Thu	0737	Sideswipe	0	1	0	Day	Wet	Not Coded
22	0.000	01/08/14	Thu	1900	Rear-End	0	0	1	Night	Wet	Not Coded
23	0.000	01/08/14	Thu	2047	Angle	0	0	1	Night	Wet	Not Coded
24	0.000	01/09/14	Fri	0840	Left-Turn	0	0	1	Day	Wet	Not Coded
25	0.000	01/09/14	Fri	0730	Right-Turn	0	0	1	Day	Wet	Not Coded
26	0.000	01/09/14	Fri	1653	Angle	0	0	1	Night	Dry	Not Coded
27	0.000	01/09/14	Fri	0750	Angle	0	0	1	Day	Wet	Not Coded
28	0.000	01/09/14	Fri	2155	Left-Turn	0	1	0	Night	Dry	Not Coded
29	0.000	01/09/14	Fri	1652	Rear-End	0	0	1	Day	Wet	Not Coded
30	0.000	01/09/14	Fri	2000	Left-Turn	0	0	1	Night	Dry	Not Coded
31	0.000	01/09/14	Fri	1922	Backed Into	0	0	1	Night	Dry	Not Coded
32	0.000	01/09/14	Fri	1631	Traffic Signal Support	0	0	1	Day	Dry	Not Coded
33	0.000	01/09/14	Fri	1445	Sideswipe	0	0	1	Day	Dry	Not Coded
34	0.000	01/10/14	Sat	2144	Left-Turn	0	0	1	Night	Dry	Not Coded
35	0.000	01/10/14	Sat	0851	Sideswipe	0	0	1	Day	Dry	Not Coded
36	0.000	01/10/14	Sat	1848	Angle	0	0	1	Unknown	Dry	Not Coded
37	0.000	01/10/14	Sat	1526	Angle	0	0	1	Day	Dry	Not Coded
38	0.000	01/10/14	Sat	1941	Backed Into	0	0	1	Night	Dry	Not Coded
39	0.000	01/10/14	Sat	1426	Left-Turn	0	0	1	Day	Dry	Not Coded
40	0.000	01/10/14	Sat	1600	Rear-End	0	0	1	Day	Dry	Not Coded
41	0.000	01/10/14	Sat	0805	Angle	0	0	1	Day	Dry	Not Coded
42	0.000	01/10/14	Sat	1405	Rear-End	0	0	1	Day	Dry	Not Coded
43	0.000	01/11/14	Sun	1330	Rear-End	0	0	1	Day	Dry	Not Coded
44	0.000	01/11/14	Sun	0813	Angle	0	0	1	Day	Dry	Not Coded
45	0.000	01/11/14	Sun	1100	Angle	0	1	0	Day	Dry	Not Coded
46	0.000	01/12/14	Mon	2030	Left-Turn	0	0	1	Night	Dry	Not Coded
47	0.000	01/13/14	Tue	1107	Rear-End	0	0	1	Day	Dry	Not Coded
48	0.000	01/14/14	Wed	0739	Angle	0	0	1	Day	Dry	Not Coded
49	0.000	01/14/14	Wed	0718	Angle	0	0	1	Day	Dry	Not Coded
50	0.000	01/14/14	Wed	1620	Parked Motor Vehicle	0	0	1	Day	Dry	Not Coded
51	0.000	01/14/14	Wed	2110	Angle	0	0	1	Night	Dry	Not Coded
52	0.000	01/15/14	Thu	1852	Angle	0	0	1	Night	Dry	Not Coded
53	0.000	01/15/14	Thu	1721	Left-Turn	0	0	1	Unknown	Other	Not Coded
54	0.000	01/15/14	Thu	1809	Not Coded	0	0	1	Night	Dry	Not Coded
55	0.000	01/15/14	Thu	1815	Backed Into	0	0	1	Night	Dry	Not Coded
56	0.000	01/16/14	Fri	0900	Sideswipe	0	0	1	Day	Dry	Not Coded
57	0.000	01/16/14	Fri	2135	Angle	0	0	1	Night	Dry	Not Coded
58	0.000	01/16/14	Fri	1400	Other Non-Collision	0	0	1	Day	Dry	Not Coded
59	0.000	01/16/14	Fri	0825	Rear-End	0	0	1	Day	Dry	Not Coded
60	0.000	01/16/14	Fri	1541	Rear-End	0	0	1	Day	Dry	Not Coded
61	0.000	01/16/14	Fri	1503	Rear-End	0	0	1	Day	Dry	Not Coded
62	0.000	01/17/14	Sat	2013	Sideswipe	0	0	1	Night	Dry	Not Coded
63	0.000	01/17/14	Sat	1727	Angle	0	0	1	Day	Dry	Not Coded
64	0.000	01/17/14	Sat	1735	Left-Turn	0	0	1	Night	Dry	Not Coded
65	0.000	01/17/14	Sat	1840	Rear-End	0	1	0	Night	Dry	Not Coded
66	0.000	01/18/14	Sun	1917	Left-Turn	0	0	1	Night	Dry	Not Coded
67	0.000	01/18/14	Sun	1725	Rear-End	0	0	1	Day	Dry	Not Coded
68	0.000	01/18/14	Sun	1730	Rear-End	0	0	1	Day	Dry	Not Coded
69	0.000	01/18/14	Sun	0950	Angle	0	0	1	Day	Dry	Not Coded

State of Florida Department of Transportation
CRASH SUMMARY

SECTION: Ludlam Trail Corridor f STATE ROUTE: #N/A
ROADWAY LIMITS: 0 M.P. 0.000 TO 0.000 ENGINEER: 0
STUDY PERIOD: FROM 1/ 2014 TO 12/ 2014 COUNTY: Miami-Dade

No.	MILE POST	DATE	DAY	TIME	CRASH TYPE	FATAL	INJURIES	PROP DAM	DAY / NIGHT	WET / DRY	CONTRIBUTING CAUSE (VEHICLE ONLY)
70	0.000	01/19/14	Mon	1137	Left-Turn	0	0	1	Day	Dry	Not Coded
71	0.000	01/19/14	Mon	1844	Rear-End	0	0	1	Night	Dry	Not Coded
72	0.000	01/20/14	Tue	0016	Not Coded	0	1	0	Night	Dry	Not Coded
73	0.000	01/20/14	Tue	1400	Parked Motor Vehicle	0	0	1	Day	Dry	Not Coded
74	0.000	01/20/14	Tue	1600	Sideswipe	0	0	1	Day	Dry	Not Coded
75	0.000	01/20/14	Tue	1613	Angle	0	0	1	Day	Dry	Not Coded
76	0.000	01/21/14	Wed	0716	Left-Turn	0	0	1	Day	Dry	Not Coded
77	0.000	01/21/14	Wed	1855	Left-Turn	0	0	1	Unknown	Other	Not Coded
78	0.000	01/21/14	Wed	1715	Right-Turn	0	0	1	Day	Wet	Not Coded
79	0.000	01/22/14	Thu	1324	Left-Turn	0	0	1	Day	Dry	Not Coded
80	0.000	01/22/14	Thu	2048	Rear-End	0	0	1	Night	Dry	Not Coded
81	0.000	01/24/14	Sat	2155	Right-Turn	0	0	1	Night	Dry	Not Coded

State of Florida Department of Transportation
CRASH SUMMARY

SECTION: Ludlam Trail Corridor f — STATE ROUTE: #N/A
ROADWAY LIMITS: 0 — M.P. 0.000 TO 0.000 — ENGINEER: 0
STUDY PERIOD: FROM 1/ 2014 TO 12/ 2014 — COUNTY: Miami-Dade

No.	MILE POST	DATE	DAY	TIME	CRASH TYPE	FATAL	INJURIES	PROP DAM	DAY / NIGHT	WET / DRY	CONTRIBUTING CAUSE (VEHICLE ONLY)
82	0.000	01/24/14	Sat	2154	Angle	0	0	1	Night	Dry	Not Coded
83	0.000	01/25/14	Sun	1407	Left-Turn	0	0	1	Day	Dry	Not Coded
84	0.000	01/25/14	Sun	1319	Rear-End	0	0	1	Unknown	Other	Not Coded
85	0.000	01/26/14	Mon	1150	Angle	0	0	1	Day	Dry	Not Coded
86	0.000	01/27/14	Tue	1050	Rear-End	0	0	1	Day	Dry	Not Coded
87	0.000	01/27/14	Tue	1937	Sideswipe	0	0	1	Night	Dry	Not Coded
88	0.000	01/27/14	Tue	2125	Sideswipe	0	0	1	Night	Dry	Not Coded
89	0.000	01/28/14	Wed	1840	Left-Turn	0	0	1	Night	Dry	Not Coded
90	0.000	01/28/14	Wed	1150	Rear-End	0	0	1	Day	Dry	Not Coded
91	0.000	01/28/14	Wed	1915	Sideswipe	0	0	1	Night	Dry	Not Coded
92	0.000	01/28/14	Wed	0800	Sideswipe	0	0	1	Day	Dry	Not Coded
93	0.000	01/29/14	Thu	0835	Backed Into	0	0	1	Day	Wet	Not Coded
94	0.000	01/29/14	Thu	1550	Angle	0	0	1	Day	Wet	Not Coded
95	0.000	01/29/14	Thu	2140	Rear-End	0	0	1	Night	Dry	Not Coded
96	0.000	01/29/14	Thu	0830	Overturn/Rollover	0	0	1	Day	Wet	Not Coded
97	0.000	01/29/14	Thu	1225	Sideswipe	0	0	1	Day	Dry	Not Coded
98	0.000	01/29/14	Thu	1828	Left-Turn	0	1	0	Night	Wet	Not Coded
99	0.000	01/29/14	Thu	1715	Backed Into	0	0	1	Day	Wet	Not Coded
100	0.000	01/29/14	Thu	1507	Angle	0	0	1	Day	Wet	Not Coded
101	0.000	01/29/14	Thu	0930	Rear-End	0	0	1	Day	Dry	Not Coded
102	0.000	01/30/14	Fri	0800	Not Coded	0	0	1	Day	Wet	Not Coded
103	0.000	01/30/14	Fri	1029	Angle	0	1	0	Day	Wet	Not Coded
104	0.000	01/30/14	Fri	1728	Angle	0	0	1	Day	Wet	Not Coded
105	0.000	01/31/14	Sat	1852	Rear-End	0	0	1	Night	Dry	Not Coded
106	0.000	01/31/14	Sat	0906	Sideswipe	0	1	0	Day	Wet	Not Coded
107	0.000	01/31/14	Sat	1239	Left-Turn	0	0	1	Day	Dry	Not Coded
108	0.000	01/31/14	Sat	0031	Left-Turn	0	0	1	Night	Wet	Not Coded
109	0.000	01/31/14	Sat	1607	Angle	0	0	1	Day	Dry	Not Coded
110	0.000	01/31/14	Sat	1753	Backed Into	0	0	1	Night	Dry	Not Coded
111	0.000	01/31/14	Sat	0840	Right-Turn	0	0	1	Day	Wet	Not Coded
112	0.000	02/01/14	Sun	1340	Rear-End	0	0	1	Day	Dry	Not Coded
113	0.000	02/01/14	Sun	1440	Rear-End	0	1	0	Day	Dry	Not Coded
114	0.000	02/01/14	Sun	0210	Not Coded	0	1	0	Night	Dry	Not Coded
115	0.000	02/01/14	Sun	1932	Sideswipe	0	0	1	Night	Dry	Not Coded
116	0.000	02/01/14	Sun	1345	Angle	0	0	1	Day	Dry	Not Coded
117	0.000	02/01/14	Sun	1050	Backed Into	0	0	1	Day	Dry	Not Coded
118	0.000	02/03/14	Tue	1755	Left-Turn	0	0	1	Night	Dry	Not Coded
119	0.000	02/03/14	Tue	1434	Sideswipe	0	0	1	Day	Dry	Not Coded
120	0.000	02/03/14	Tue	1300	Rear-End	0	0	1	Day	Dry	Not Coded
121	0.000	02/03/14	Tue	0800	Head-On	0	0	1	Day	Dry	Not Coded
122	0.000	02/04/14	Wed	1832	Angle	0	0	1	Night	Dry	Not Coded
123	0.000	02/04/14	Wed	1515	Angle	0	0	1	Day	Dry	Not Coded
124	0.000	02/04/14	Wed	1800	Rear-End	0	0	1	Night	Dry	Not Coded
125	0.000	02/04/14	Wed	2000	Rear-End	0	0	1	Night	Dry	Not Coded
126	0.000	02/04/14	Wed	1620	Rear-End	0	0	1	Day	Dry	Not Coded
127	0.000	02/05/14	Thu	1845	Angle	0	0	1	Night	Dry	Not Coded
128	0.000	02/05/14	Thu	1517	Sideswipe	0	0	1	Day	Dry	Not Coded
129	0.000	02/05/14	Thu	1712	Utility Pole/Light Support	0	0	1	Day	Dry	Not Coded
130	0.000	02/05/14	Thu	1625	Angle	0	1	0	Day	Dry	Not Coded
131	0.000	02/05/14	Thu	0845	Angle	0	0	1	Day	Dry	Not Coded
132	0.000	02/05/14	Thu	1405	Left-Turn	0	1	0	Day	Dry	Not Coded
133	0.000	02/06/14	Fri	1651	Rear-End	0	0	1	Day	Dry	Not Coded
134	0.000	02/06/14	Fri	1130	Angle	0	0	1	Day	Dry	Not Coded
135	0.000	02/06/14	Fri	0848	Parked Motor Vehicle	0	1	0	Day	Dry	Not Coded
136	0.000	02/06/14	Fri	1651	Left-Turn	0	0	1	Unknown	Other	Not Coded
137	0.000	02/06/14	Fri	1550	Rear-End	0	0	1	Day	Dry	Not Coded
138	0.000	02/06/14	Fri	1726	Angle	0	0	1	Day	Dry	Not Coded
139	0.000	02/06/14	Fri	0925	Left-Turn	0	0	1	Day	Dry	Not Coded
140	0.000	02/06/14	Fri	0902	Angle	0	1	0	Day	Dry	Not Coded
141	0.000	02/06/14	Fri	1711	Sideswipe	0	0	1	Day	Dry	Not Coded
142	0.000	02/06/14	Fri	0804	Angle	0	0	1	Day	Dry	Not Coded
143	0.000	02/06/14	Fri	1800	Left-Turn	0	0	1	Night	Dry	Not Coded
144	0.000	02/07/14	Sat	1800	Rear-End	0	1	0	Night	Dry	Not Coded
145	0.000	02/07/14	Sat	1805	Rear-End	0	0	1	Unknown	Other	Not Coded
146	0.000	02/07/14	Sat	1628	Rear-End	0	0	1	Day	Dry	Not Coded
147	0.000	02/07/14	Sat	1330	Rear-End	0	0	1	Day	Dry	Not Coded
148	0.000	02/07/14	Sat	1418	Rear-End	0	0	1	Day	Dry	Not Coded
149	0.000	02/08/14	Sun	1312	Angle	0	0	1	Day	Dry	Not Coded
150	0.000	02/09/14	Mon	1255	Left-Turn	0	1	0	Day	Dry	Not Coded

State of Florida Department of Transportation
CRASH SUMMARY

SECTION: Ludlam Trail Corridor f — STATE ROUTE: #N/A
ROADWAY LIMITS: 0 — M.P. 0.000 TO 0.000 — ENGINEER: 0
STUDY PERIOD: FROM 1/ 2014 TO 12/ 2014 — COUNTY: Miami-Dade

No.	MILE POST	DATE	DAY	TIME	CRASH TYPE	FATAL	INJURIES	PROP DAM	DAY / NIGHT	WET / DRY	CONTRIBUTING CAUSE (VEHICLE ONLY)
151	0.000	02/09/14	Mon	1124	Angle	0	0	1	Day	Dry	Not Coded
152	0.000	02/09/14	Mon	0325	Left-Turn	0	0	1	Night	Dry	Not Coded
153	0.000	02/09/14	Mon	1250	Rear-End	0	0	1	Day	Dry	Not Coded
154	0.000	02/10/14	Tue	2127	Angle	0	0	1	Night	Dry	Not Coded
155	0.000	02/10/14	Tue	1109	Rear-End	0	0	1	Day	Dry	Not Coded
156	0.000	02/10/14	Tue	1619	Rear-End	0	1	0	Day	Dry	Not Coded
157	0.000	02/10/14	Tue	1851	Rear-End	0	0	1	Night	Dry	Not Coded
158	0.000	02/11/14	Wed	1733	Rear-End	0	0	1	Day	Dry	Not Coded
159	0.000	02/11/14	Wed	1017	Sideswipe	0	0	1	Day	Dry	Not Coded
160	0.000	02/11/14	Wed	0957	Left-Turn	0	0	1	Day	Dry	Not Coded
161	0.000	02/12/14	Thu	1310	Angle	0	0	1	Day	Dry	Not Coded
162	0.000	02/12/14	Thu	2014	Left-Turn	0	0	1	Night	Dry	Not Coded
163	0.000	02/12/14	Thu	2330	Angle	0	0	1	Night	Wet	Not Coded
164	0.000	02/12/14	Thu	1750	Rear-End	0	0	1	Day	Wet	Not Coded
165	0.000	02/12/14	Thu	2056	Left-Turn	0	1	0	Night	Dry	Not Coded
166	0.000	02/12/14	Thu	1958	Angle	0	0	1	Night	Dry	Not Coded
167	0.000	02/12/14	Thu	2205	Angle	0	0	1	Night	Wet	Not Coded
168	0.000	02/12/14	Thu	1613	Sideswipe	0	0	1	Day	Wet	Not Coded
169	0.000	02/12/14	Thu	1628	Rear-End	0	0	1	Day	Wet	Not Coded
170	0.000	02/13/14	Fri	1724	Left-Turn	0	0	1	Day	Dry	Not Coded
171	0.000	02/13/14	Fri	1732	Angle	0	1	0	Day	Dry	Not Coded
172	0.000	02/14/14	Sat	1534	Angle	0	0	1	Day	Dry	Not Coded
173	0.000	02/14/14	Sat	1342	Rear-End	0	0	1	Day	Dry	Not Coded
174	0.000	02/14/14	Sat	1941	Angle	0	1	0	Night	Dry	Not Coded
175	0.000	02/14/14	Sat	1529	Rear-End	0	0	1	Day	Dry	Not Coded
176	0.000	02/14/14	Sat	1555	Rear-End	0	0	1	Day	Dry	Not Coded
177	0.000	02/14/14	Sat	1713	Rear-End	0	0	1	Day	Dry	Not Coded
178	0.000	02/14/14	Sat	1830	Rear-End	0	0	1	Night	Dry	Not Coded
179	0.000	02/15/14	Sun	2325	Sideswipe	0	0	1	Night	Dry	Not Coded
180	0.000	02/16/14	Mon	1921	Sideswipe	0	0	1	Night	Dry	Not Coded
181	0.000	02/17/14	Tue	1245	Rear-End	0	0	1	Day	Dry	Not Coded
182	0.000	02/17/14	Tue	0812	Rear-End	0	0	1	Day	Dry	Not Coded
183	0.000	02/17/14	Tue	1810	Rear-End	0	0	1	Night	Dry	Not Coded
184	0.000	02/18/14	Wed	1705	Rear-End	0	1	0	Night	Dry	Not Coded
185	0.000	02/18/14	Wed	1719	Left-Turn	0	0	1	Day	Dry	Not Coded
186	0.000	02/18/14	Wed	1725	Rear-End	0	1	0	Day	Dry	Not Coded
187	0.000	02/18/14	Wed	1725	Rear-End	0	0	1	Day	Dry	Not Coded
188	0.000	02/18/14	Wed	1845	Rear-End	0	0	1	Night	Dry	Not Coded
189	0.000	02/18/14	Wed	1525	Sideswipe	0	0	1	Day	Dry	Not Coded
190	0.000	02/18/14	Wed	1644	Angle	0	0	1	Day	Dry	Not Coded
191	0.000	02/19/14	Thu	0958	Rear-End	0	0	1	Day	Dry	Not Coded
192	0.000	02/19/14	Thu	0947	Rear-End	0	0	1	Day	Dry	Not Coded
193	0.000	02/19/14	Thu	1901	Angle	0	1	0	Night	Dry	Not Coded
194	0.000	02/19/14	Thu	1310	Left-Turn	0	0	1	Day	Dry	Not Coded
195	0.000	02/19/14	Thu	0805	Rear-End	0	0	1	Day	Dry	Not Coded
196	0.000	02/19/14	Thu	1735	Angle	0	0	1	Day	Dry	Not Coded
197	0.000	02/19/14	Thu	0030	Rear-End	0	0	1	Day	Dry	Not Coded
198	0.000	02/20/14	Fri	2104	Sideswipe	0	0	1	Night	Dry	Not Coded
199	0.000	02/20/14	Fri	1000	Rear-End	0	0	1	Day	Dry	Not Coded
200	0.000	02/20/14	Fri	1504	Sideswipe	0	1	0	Day	Dry	Not Coded
201	0.000	02/20/14	Fri	1330	Sideswipe	0	1	0	Day	Dry	Not Coded
202	0.000	02/20/14	Fri	0800	Rear-End	0	0	1	Day	Dry	Not Coded
203	0.000	02/20/14	Fri	1910	Sideswipe	0	0	1	Day	Dry	Not Coded
204	0.000	02/20/14	Fri	1152	Angle	0	1	0	Day	Dry	Not Coded
205	0.000	02/20/14	Fri	0810	Left-Turn	0	0	1	Day	Dry	Not Coded
206	0.000	02/20/14	Fri	1146	Rear-End	0	0	1	Day	Dry	Not Coded
207	0.000	02/21/14	Sat	1928	Rear-End	0	0	1	Night	Dry	Not Coded
208	0.000	02/21/14	Sat	1958	Rear-End	0	0	1	Night	Dry	Not Coded
209	0.000	02/21/14	Sat	1615	Angle	0	0	1	Day	Dry	Not Coded
210	0.000	02/21/14	Sat	0814	Left-Turn	0	0	1	Day	Dry	Not Coded
211	0.000	02/21/14	Sat	1525	Backed Into	0	0	1	Day	Dry	Not Coded
212	0.000	02/21/14	Sat	1428	Rear-End	0	0	1	Day	Dry	Not Coded
213	0.000	02/21/14	Sat	1330	Rear-End	0	0	1	Day	Dry	Not Coded
214	0.000	02/22/14	Sun	1950	Sideswipe	0	0	1	Night	Dry	Not Coded
215	0.000	02/22/14	Sun	1635	Sideswipe	0	0	1	Day	Dry	Not Coded
216	0.000	02/22/14	Sun	1615	Rear-End	0	0	1	Day	Dry	Not Coded
217	0.000	02/22/14	Sun	2205	Rear-End	0	0	1	Night	Dry	Not Coded
218	0.000	02/23/14	Mon	1300	Rear-End	0	0	1	Day	Dry	Not Coded
219	0.000	02/23/14	Mon	1133	Rear-End	0	0	1	Day	Dry	Not Coded

State of Florida Department of Transportation
CRASH SUMMARY

SECTION: Ludlam Trail Corridor f | STATE ROUTE: #N/A
ROADWAY LIMITS: 0 | M.P. 0.000 TO 0.000 | ENGINEER: 0
STUDY PERIOD: FROM 1/ 2014 TO 12/ 2014 | COUNTY: Miami-Dade

No.	MILE POST	DATE	DAY	TIME	CRASH TYPE	FATAL	INJURIES	PROP DAM	DAY / NIGHT	WET / DRY	CONTRIBUTING CAUSE (VEHICLE ONLY)
220	0.000	02/24/14	Tue	1724	Left-Turn	0	0	1	Day	Dry	Not Coded
221	0.000	02/25/14	Wed	0809	Angle	0	0	1	Unknown	Other	Not Coded
222	0.000	02/25/14	Wed	0914	Sideswipe	0	1	0	Day	Dry	Not Coded
223	0.000	02/26/14	Thu	1015	Angle	0	0	1	Day	Dry	Not Coded
224	0.000	02/26/14	Thu	1141	Left-Turn	0	0	1	Day	Dry	Not Coded
225	0.000	02/27/14	Fri	1839	Sideswipe	0	1	0	Night	Dry	Not Coded
226	0.000	02/27/14	Fri	1750	Left-Turn	0	0	1	Night	Dry	Not Coded
227	0.000	02/28/14	Sat	1655	Angle	0	1	0	Day	Dry	Not Coded
228	0.000	02/28/14	Sat	1844	Left-Turn	0	0	1	Night	Dry	Not Coded
229	0.000	02/28/14	Sat	1400	Rear-End	0	0	1	Day	Dry	Not Coded
230	0.000	03/01/14	Sun	1756	Angle	0	0	1	Day	Dry	Not Coded
231	0.000	03/01/14	Sun	1915	Left-Turn	0	0	1	Unknown	Other	Not Coded
232	0.000	03/01/14	Sun	1330	Angle	0	0	1	Day	Dry	Not Coded
233	0.000	03/02/14	Mon	1400	Rear-End	0	0	1	Day	Dry	Not Coded
234	0.000	03/02/14	Mon	1740	Rear-End	0	1	0	Night	Dry	Not Coded
235	0.000	03/03/14	Tue	2130	Rear-End	0	0	1	Night	Dry	Not Coded
236	0.000	03/03/14	Tue	0815	Left-Turn	0	0	1	Day	Dry	Not Coded
237	0.000	03/04/14	Wed	0745	Not Coded	0	0	1	Day	Dry	Not Coded
238	0.000	03/04/14	Wed	0845	Left-Turn	0	0	1	Day	Dry	Not Coded
239	0.000	03/04/14	Wed	1410	Rear-End	0	0	1	Day	Dry	Not Coded
240	0.000	03/04/14	Wed	1601	Left-Turn	0	0	1	Day	Dry	Not Coded
241	0.000	03/04/14	Wed	1525	Rear-End	0	0	1	Day	Dry	Not Coded
242	0.000	03/05/14	Thu	0545	Rear-End	0	0	1	Night	Dry	Not Coded
243	0.000	03/05/14	Thu	0820	Backed Into	0	0	1	Day	Dry	Not Coded
244	0.000	03/05/14	Thu	1217	Sideswipe	0	0	1	Day	Dry	Not Coded
245	0.000	03/05/14	Thu	1935	Sideswipe	0	0	1	Night	Dry	Not Coded
246	0.000	03/05/14	Thu	0900	Sideswipe	0	0	1	Day	Dry	Not Coded
247	0.000	03/06/14	Fri	1635	Sideswipe	0	0	1	Day	Wet	Not Coded
248	0.000	03/06/14	Fri	0959	Left-Turn	0	1	0	Day	Dry	Not Coded
249	0.000	03/06/14	Fri	1847	Right-Turn	0	1	0	Night	Wet	Not Coded
250	0.000	03/06/14	Fri	1944	Sideswipe	0	0	1	Night	Wet	Not Coded
251	0.000	03/06/14	Fri	1520	Right-Turn	0	0	1	Day	Wet	Not Coded
252	0.000	03/07/14	Sat	1250	Angle	0	1	0	Day	Dry	Not Coded
253	0.000	03/07/14	Sat	1309	Left-Turn	0	0	1	Day	Dry	Not Coded
254	0.000	03/07/14	Sat	1453	Parked Motor Vehicle	0	0	1	Unknown	Other	Not Coded
255	0.000	03/07/14	Sat	1515	Overturn/Rollover	0	0	1	Day	Dry	Not Coded
256	0.000	03/07/14	Sat	1918	Left-Turn	0	0	1	Night	Dry	Not Coded
257	0.000	03/07/14	Sat	1120	Left-Turn	0	0	1	Day	Dry	Not Coded
258	0.000	03/08/14	Sun	1315	Rear-End	0	0	1	Day	Dry	Not Coded
259	0.000	03/08/14	Sun	1443	Angle	0	0	1	Day	Dry	Not Coded
260	0.000	03/08/14	Sun	0825	Rear-End	0	1	0	Day	Dry	Not Coded
261	0.000	03/09/14	Mon	0026	Angle	0	0	1	Night	Dry	Not Coded
262	0.000	03/09/14	Mon	0755	Rear-End	0	0	1	Day	Dry	Not Coded
263	0.000	03/10/14	Tue	1650	Left-Turn	0	0	1	Day	Dry	Not Coded
264	0.000	03/10/14	Tue	1700	Rear-End	0	0	1	Day	Dry	Not Coded
265	0.000	03/11/14	Wed	0740	Rear-End	0	0	1	Day	Dry	Not Coded
266	0.000	03/11/14	Wed	1401	Rear-End	0	0	1	Day	Dry	Not Coded
267	0.000	03/11/14	Wed	1800	Angle	0	0	1	Day	Dry	Not Coded
268	0.000	03/11/14	Wed	1306	Angle	0	1	0	Day	Dry	Not Coded
269	0.000	03/11/14	Wed	2013	Rear-End	0	0	1	Night	Dry	Not Coded
270	0.000	03/12/14	Thu	1100	Sideswipe	0	0	1	Day	Dry	Not Coded
271	0.000	03/12/14	Thu	1150	Sideswipe	0	0	1	Day	Dry	Not Coded
272	0.000	03/12/14	Thu	1436	Animal	0	0	1	Day	Dry	Not Coded
273	0.000	03/12/14	Thu	1302	Sideswipe	0	0	1	Day	Dry	Not Coded
274	0.000	03/12/14	Thu	1700	Rear-End	0	0	1	Day	Dry	Not Coded
275	0.000	03/13/14	Fri	1809	Sideswipe	0	0	1	Day	Dry	Not Coded
276	0.000	03/13/14	Fri	1155	Not Coded	0	0	1	Day	Dry	Not Coded
277	0.000	03/13/14	Fri	1529	Left-Turn	0	0	1	Day	Dry	Not Coded
278	0.000	03/14/14	Sat	1810	Sideswipe	0	0	1	Day	Dry	Not Coded
279	0.000	03/14/14	Sat	1520	Left-Turn	0	0	1	Day	Dry	Not Coded
280	0.000	03/14/14	Sat	0945	Rear-End	0	0	1	Day	Dry	Not Coded
281	0.000	03/14/14	Sat	1709	Angle	0	0	1	Day	Dry	Not Coded
282	0.000	03/14/14	Sat	0810	Rear-End	0	0	1	Day	Dry	Not Coded
283	0.000	03/14/14	Sat	0831	Angle	0	1	0	Day	Dry	Not Coded
284	0.000	03/14/14	Sat	1730	Rear-End	0	0	1	Day	Dry	Not Coded
285	0.000	03/14/14	Sat	1430	Sideswipe	0	0	1	Day	Dry	Not Coded
286	0.000	03/14/14	Sat	2118	Not Coded	0	0	1	Night	Dry	Not Coded
287	0.000	03/14/14	Sat	1222	Rear-End	0	0	1	Day	Dry	Not Coded
288	0.000	03/14/14	Sat	1525	Backed Into	0	0	1	Day	Dry	Not Coded

State of Florida Department of Transportation
CRASH SUMMARY

SECTION: Ludlam Trail Corridor f — STATE ROUTE: #N/A
ROADWAY LIMITS: 0 — M.P. 0.000 TO 0.000 — ENGINEER: 0
STUDY PERIOD: FROM 1/ 2014 TO 12/ 2014 — COUNTY: Miami-Dade

No.	MILE POST	DATE	DAY	TIME	CRASH TYPE	FATAL	INJURIES	PROP DAM	DAY / NIGHT	WET / DRY	CONTRIBUTING CAUSE (VEHICLE ONLY)
289	0.000	03/14/14	Sat	2310	Left-Turn	0	1	0	Night	Dry	Not Coded
290	0.000	03/15/14	Sun	1126	Not Coded	0	0	1	Day	Dry	Not Coded
291	0.000	03/15/14	Sun	1152	Left-Turn	0	0	1	Day	Dry	Not Coded
292	0.000	03/15/14	Sun	1350	Rear-End	0	0	1	Day	Dry	Not Coded
293	0.000	03/15/14	Sun	2329	Angle	0	0	1	Night	Dry	Not Coded
294	0.000	03/16/14	Mon	1900	Angle	0	0	1	Night	Dry	Not Coded
295	0.000	03/16/14	Mon	2002	Rear-End	0	0	1	Night	Dry	Not Coded
296	0.000	03/16/14	Mon	1603	Angle	0	1	0	Day	Dry	Not Coded
297	0.000	03/16/14	Mon	1650	Backed Into	0	0	1	Day	Dry	Not Coded
298	0.000	03/16/14	Mon	1230	Rear-End	0	0	1	Day	Dry	Not Coded
299	0.000	03/17/14	Tue	1507	Rear-End	0	0	1	Unknown	Other	Not Coded
300	0.000	03/17/14	Tue	2000	Angle	0	0	1	Unknown	Other	Not Coded
301	0.000	03/17/14	Tue	2147	Left-Turn	0	0	1	Night	Dry	Not Coded
302	0.000	03/17/14	Tue	1230	Rear-End	0	0	1	Day	Dry	Not Coded
303	0.000	03/18/14	Wed	1841	Rear-End	0	0	1	Day	Dry	Not Coded
304	0.000	03/18/14	Wed	1215	Rear-End	0	0	1	Day	Dry	Not Coded
305	0.000	03/19/14	Thu	1450	Rear-End	0	0	1	Day	Dry	Not Coded
306	0.000	03/19/14	Thu	1139	Rear-End	0	0	1	Day	Dry	Not Coded
307	0.000	03/20/14	Fri	1751	Rear-End	0	0	1	Day	Dry	Not Coded
308	0.000	03/20/14	Fri	2110	Rear-End	0	0	1	Day	Dry	Not Coded
309	0.000	03/20/14	Fri	2219	Rear-End	0	0	1	Night	Dry	Not Coded
310	0.000	03/20/14	Fri	1015	Sideswipe	0	0	1	Day	Dry	Not Coded
311	0.000	03/20/14	Fri	1920	Not Coded	0	0	1	Day	Dry	Not Coded
312	0.000	03/21/14	Sat	0855	Rear-End	0	0	1	Day	Dry	Not Coded
313	0.000	03/21/14	Sat	1525	Angle	0	0	1	Day	Dry	Not Coded
314	0.000	03/22/14	Sun	1923	Sideswipe	0	0	1	Day	Dry	Not Coded
315	0.000	03/22/14	Sun	1533	Sideswipe	0	0	1	Day	Dry	Not Coded
316	0.000	03/22/14	Sun	1702	Rear-End	0	0	1	Day	Dry	Not Coded
317	0.000	03/22/14	Sun	1135	Rear-End	0	0	1	Day	Dry	Not Coded
318	0.000	03/23/14	Mon	2000	Sideswipe	0	0	1	Day	Dry	Not Coded
319	0.000	03/24/14	Tue	1705	Left-Turn	0	0	1	Day	Dry	Not Coded
320	0.000	03/24/14	Tue	1220	Sideswipe	0	0	1	Day	Dry	Not Coded
321	0.000	03/24/14	Tue	0845	Right-Turn	0	0	1	Day	Dry	Not Coded
322	0.000	03/24/14	Tue	2140	Rear-End	0	0	1	Night	Dry	Not Coded
323	0.000	03/24/14	Tue	1630	Rear-End	0	0	1	Day	Dry	Not Coded
324	0.000	03/24/14	Tue	1336	Left-Turn	0	0	1	Day	Wet	Not Coded
325	0.000	03/25/14	Wed	0810	Angle	0	0	1	Day	Wet	Not Coded
326	0.000	03/25/14	Wed	1615	Rear-End	0	0	1	Day	Dry	Not Coded
327	0.000	03/25/14	Wed	1138	Head-On	0	0	1	Day	Dry	Not Coded
328	0.000	03/25/14	Wed	1723	Parked Motor Vehicle	0	0	1	Day	Dry	Not Coded
329	0.000	03/26/14	Thu	1655	Rear-End	0	0	1	Day	Dry	Not Coded
330	0.000	03/26/14	Thu	1741	Angle	0	0	1	Unknown	Other	Not Coded
331	0.000	03/26/14	Thu	1956	Angle	0	0	1	Night	Dry	Not Coded
332	0.000	03/26/14	Thu	1235	Rear-End	0	0	1	Day	Dry	Not Coded
333	0.000	03/26/14	Thu	1023	Sideswipe	0	0	1	Day	Dry	Not Coded
334	0.000	03/26/14	Thu	1842	Sideswipe	0	0	1	Day	Dry	Not Coded
335	0.000	03/27/14	Fri	1725	Rear-End	0	0	1	Day	Dry	Not Coded
336	0.000	03/27/14	Fri	1607	Overturn/Rollover	0	0	1	Day	Dry	Not Coded
337	0.000	03/27/14	Fri	1200	Rear-End	0	0	1	Day	Dry	Not Coded
338	0.000	03/27/14	Fri	1712	Angle	0	0	1	Day	Dry	Not Coded
339	0.000	03/27/14	Fri	1539	Left-Turn	0	1	0	Day	Dry	Not Coded
340	0.000	03/28/14	Sat	1000	Backed Into	0	0	1	Night	Dry	Not Coded
341	0.000	03/28/14	Sat	1232	Rear-End	0	0	1	Day	Dry	Not Coded
342	0.000	03/28/14	Sat	0810	Rear-End	0	1	0	Day	Dry	Not Coded
343	0.000	03/28/14	Sat	1705	Rear-End	0	0	1	Day	Dry	Not Coded
344	0.000	03/28/14	Sat	0950	Parked Motor Vehicle	0	0	1	Day	Dry	Not Coded
345	0.000	03/28/14	Sat	1727	Not Coded	0	0	1	Day	Dry	Not Coded
346	0.000	03/28/14	Sat	0810	Right-Turn	0	1	0	Day	Dry	Not Coded
347	0.000	03/29/14	Sun	1520	Angle	0	0	1	Day	Dry	Not Coded
348	0.000	03/29/14	Sun	1040	Head-On	0	0	1	Day	Dry	Not Coded
349	0.000	03/30/14	Mon	1526	Angle	0	0	1	Day	Dry	Not Coded
350	0.000	03/31/14	Tue	1028	Left-Turn	0	0	1	Day	Dry	Not Coded
351	0.000	03/31/14	Tue	2115	Angle	0	0	1	Night	Dry	Not Coded
352	0.000	03/31/14	Tue	1409	Left-Turn	0	0	1	Day	Dry	Not Coded
353	0.000	03/31/14	Tue	1215	Rear-End	0	0	1	Day	Dry	Not Coded
354	0.000	03/31/14	Tue	1025	Angle	0	0	1	Day	Dry	Not Coded
355	0.000	04/01/14	Wed	0814	Rear-End	0	0	1	Unknown	Other	Not Coded
356	0.000	04/01/14	Wed	0930	Angle	0	0	1	Day	Dry	Not Coded
357	0.000	04/01/14	Wed	0815	Rear-End	0	0	1	Day	Dry	Not Coded

State of Florida Department of Transportation
CRASH SUMMARY

SECTION: Ludlam Trail Corridor f — STATE ROUTE: #N/A
ROADWAY LIMITS: 0 — M.P. 0.000 TO 0.000 — ENGINEER: 0
STUDY PERIOD: FROM 1/ 2014 TO 12/ 2014 — COUNTY: Miami-Dade

No.	MILE POST	DATE	DAY	TIME	CRASH TYPE	FATAL	INJURIES	PROP DAM	DAY / NIGHT	WET / DRY	CONTRIBUTING CAUSE (VEHICLE ONLY)
358	0.000	04/02/14	Thu	1450	Rear-End	0	0	1	Day	Dry	Not Coded
359	0.000	04/02/14	Thu	1427	Rear-End	0	0	1	Day	Dry	Not Coded
360	0.000	04/02/14	Thu	1433	Angle	0	0	1	Day	Dry	Not Coded
361	0.000	04/02/14	Thu	1230	Sideswipe	0	0	1	Day	Dry	Not Coded
362	0.000	04/02/14	Thu	0900	Angle	0	0	1	Day	Dry	Not Coded
363	0.000	04/02/14	Thu	0158	Angle	0	0	1	Night	Dry	Not Coded
364	0.000	04/03/14	Fri	1636	Angle	0	0	1	Day	Dry	Not Coded
365	0.000	04/03/14	Fri	1730	Rear-End	0	0	1	Day	Dry	Not Coded
366	0.000	04/03/14	Fri	1150	Rear-End	0	0	1	Day	Dry	Not Coded
367	0.000	04/04/14	Sat	1620	Rear-End	0	1	0	Day	Dry	Not Coded
368	0.000	04/04/14	Sat	0902	Sideswipe	0	1	0	Day	Dry	Not Coded
369	0.000	04/04/14	Sat	1023	Angle	0	0	1	Day	Other	Not Coded
370	0.000	04/04/14	Sat	1646	Backed Into	0	0	1	Day	Dry	Not Coded
371	0.000	04/05/14	Sun	1340	Rear-End	0	0	1	Day	Dry	Not Coded
372	0.000	04/05/14	Sun	1433	Rear-End	0	1	0	Day	Dry	Not Coded
373	0.000	04/05/14	Sun	1817	Sideswipe	0	0	1	Day	Dry	Not Coded
374	0.000	04/05/14	Sun	1505	Backed Into	0	1	0	Day	Dry	Not Coded
375	0.000	04/05/14	Sun	1214	Rear-End	0	0	1	Day	Dry	Not Coded
376	0.000	04/05/14	Sun	0710	Rear-End	0	0	1	Day	Dry	Not Coded
377	0.000	04/05/14	Sun	1225	Left-Turn	0	1	0	Day	Dry	Not Coded
378	0.000	04/05/14	Sun	0835	Angle	0	0	1	Day	Dry	Not Coded
379	0.000	04/05/14	Sun	2020	Rear-End	0	0	1	Night	Dry	Not Coded
380	0.000	04/06/14	Mon	0733	Rear-End	0	0	1	Day	Dry	Not Coded
381	0.000	04/07/14	Tue	0856	Rear-End	0	1	0	Day	Dry	Not Coded
382	0.000	04/07/14	Tue	1840	Rear-End	0	0	1	Day	Dry	Not Coded
383	0.000	04/07/14	Tue	0800	Left-Turn	0	0	1	Day	Dry	Not Coded
384	0.000	04/07/14	Tue	1400	Rear-End	0	1	0	Day	Dry	Not Coded
385	0.000	04/07/14	Tue	0530	Angle	0	0	1	Night	Dry	Not Coded
386	0.000	04/08/14	Wed	1636	Left-Turn	0	0	1	Day	Wet	Not Coded
387	0.000	04/08/14	Wed	1515	Rear-End	0	0	1	Day	Dry	Not Coded
388	0.000	04/08/14	Wed	2030	Not Coded	0	0	1	Night	Wet	Not Coded
389	0.000	04/09/14	Thu	2049	Sideswipe	0	0	1	Night	Wet	Not Coded
390	0.000	04/09/14	Thu	1810	Sideswipe	0	1	0	Day	Dry	Not Coded
391	0.000	04/09/14	Thu	0730	Rear-End	0	0	1	Day	Dry	Not Coded
392	0.000	04/10/14	Fri	2100	Backed Into	0	0	1	Night	Dry	Not Coded
393	0.000	04/10/14	Fri	0640	Rear-End	0	0	1	Unknown	Other	Not Coded
394	0.000	04/11/14	Sat	2130	Backed Into	0	0	1	Night	Dry	Not Coded
395	0.000	04/11/14	Sat	0910	Rear-End	0	0	1	Day	Dry	Not Coded
396	0.000	04/11/14	Sat	1420	Angle	0	1	0	Day	Dry	Not Coded
397	0.000	04/11/14	Sat	1726	Left-Turn	0	0	1	Unknown	Other	Not Coded
398	0.000	04/11/14	Sat	1847	Parked Motor Vehicle	0	1	0	Day	Dry	Not Coded
399	0.000	04/11/14	Sat	1730	Other Non-Collision	0	0	1	Day	Dry	Not Coded
400	0.000	04/11/14	Sat	2022	Rear-End	0	0	1	Night	Dry	Not Coded
401	0.000	04/11/14	Sat	1350	Rear-End	0	0	1	Day	Dry	Not Coded
402	0.000	04/11/14	Sat	0903	Backed Into	0	0	1	Day	Dry	Not Coded
403	0.000	04/12/14	Sun	1810	Sideswipe	0	0	1	Day	Dry	Not Coded
404	0.000	04/12/14	Sun	1200	Rear-End	0	0	1	Day	Dry	Not Coded
405	0.000	04/12/14	Sun	0730	Angle	0	1	0	Day	Dry	Not Coded
406	0.000	04/13/14	Mon	1541	Rear-End	0	0	1	Day	Dry	Not Coded
407	0.000	04/14/14	Tue	2015	Angle	0	0	1	Night	Dry	Not Coded
408	0.000	04/14/14	Tue	1524	Right-Turn	0	0	1	Day	Dry	Not Coded
409	0.000	04/14/14	Tue	1359	Rear-End	0	0	1	Day	Dry	Not Coded
410	0.000	04/14/14	Tue	1552	Sideswipe	0	0	1	Day	Dry	Not Coded
411	0.000	04/14/14	Tue	2014	Rear-End	0	0	1	Night	Dry	Not Coded
412	0.000	04/15/14	Wed	1740	Sideswipe	0	0	1	Day	Dry	Not Coded
413	0.000	04/16/14	Thu	1550	Rear-End	0	0	1	Day	Dry	Not Coded
414	0.000	04/16/14	Thu	1813	Rear-End	0	0	1	Day	Dry	Not Coded
415	0.000	04/17/14	Fri	1700	Rear-End	0	1	0	Day	Dry	Not Coded
416	0.000	04/17/14	Fri	1910	Angle	0	1	0	Day	Dry	Not Coded
417	0.000	04/17/14	Fri	0305	Rear-End	0	1	0	Night	Dry	Not Coded
418	0.000	04/17/14	Fri	0500	Rear-End	0	1	0	Night	Dry	Not Coded
419	0.000	04/17/14	Fri	2150	Angle	0	0	1	Night	Wet	Not Coded
420	0.000	04/17/14	Fri	1220	Rear-End	0	0	1	Day	Dry	Not Coded
421	0.000	04/18/14	Sat	1400	Rear-End	0	0	1	Day	Dry	Not Coded
422	0.000	04/18/14	Sat	0815	Sideswipe	0	1	0	Day	Dry	Not Coded
423	0.000	04/18/14	Sat	1846	Left-Turn	0	1	0	Day	Dry	Not Coded
424	0.000	04/18/14	Sat	1223	Angle	0	0	1	Day	Dry	Not Coded
425	0.000	04/18/14	Sat	1915	Angle	0	1	0	Day	Dry	Not Coded
426	0.000	04/18/14	Sat	1205	Sideswipe	0	0	1	Day	Dry	Not Coded

State of Florida Department of Transportation
CRASH SUMMARY

SECTION: Ludlam Trail Corridor f — STATE ROUTE: #N/A
ROADWAY LIMITS: 0 — M.P. 0.000 TO 0.000 — ENGINEER: 0
STUDY PERIOD: FROM 1/ 2014 TO 12/ 2014 — COUNTY: Miami-Dade

No.	MILE POST	DATE	DAY	TIME	CRASH TYPE	FATAL	INJURIES	PROP DAM	DAY / NIGHT	WET / DRY	CONTRIBUTING CAUSE (VEHICLE ONLY)
427	0.000	04/18/14	Sat	0845	Rear-End	0	0	1	Day	Dry	Not Coded
428	0.000	04/19/14	Sun	1345	Rear-End	0	0	1	Day	Dry	Not Coded
429	0.000	04/19/14	Sun	1627	Rear-End	0	0	1	Day	Dry	Not Coded
430	0.000	04/21/14	Tue	1222	Sideswipe	0	1	0	Day	Dry	Not Coded
431	0.000	04/21/14	Tue	1620	Rear-End	0	0	1	Day	Dry	Not Coded
432	0.000	04/21/14	Tue	1420	Left-Turn	0	0	1	Day	Dry	Not Coded
433	0.000	04/21/14	Tue	1729	Backed Into	0	0	1	Unknown	Other	Not Coded
434	0.000	04/21/14	Tue	1730	Rear-End	0	0	1	Day	Dry	Not Coded
435	0.000	04/21/14	Tue	0740	Backed Into	0	0	1	Day	Dry	Not Coded
436	0.000	04/21/14	Tue	1820	Right-Turn	0	0	1	Day	Dry	Not Coded
437	Off-System	04/21/14	Tue	1120	Rear-End	0	0	1	Day	Dry	Not Coded
438	0.000	04/22/14	Wed	0645	Angle	0	0	1	Night	Dry	Not Coded
439	0.000	04/22/14	Wed	0950	Rear-End	0	0	1	Day	Dry	Not Coded
440	0.000	04/22/14	Wed	0359	Left-Turn	0	0	1	Night	Dry	Not Coded
441	0.000	04/22/14	Wed	1602	Rear-End	0	0	1	Day	Dry	Not Coded
442	0.000	04/23/14	Thu	1400	Sideswipe	0	0	1	Day	Dry	Not Coded
443	0.000	04/23/14	Thu	1025	Angle	0	0	1	Day	Dry	Not Coded
444	0.000	04/23/14	Thu	1646	Pedestrian	0	0	1	Day	Dry	Not Coded
445	0.000	04/23/14	Thu	1458	Left-Turn	0	0	1	Unknown	Other	Not Coded
446	0.000	04/23/14	Thu	1735	Angle	0	0	1	Day	Dry	Not Coded
447	0.000	04/23/14	Thu	2020	Angle	0	0	1	Night	Dry	Not Coded
448	0.000	04/23/14	Thu	1826	Left-Turn	0	0	1	Day	Dry	Not Coded
449	0.000	04/23/14	Thu	0920	Rear-End	0	0	1	Day	Dry	Not Coded
450	0.000	04/23/14	Thu	2311	Angle	0	0	1	Night	Dry	Not Coded
451	0.000	04/24/14	Fri	1730	Left-Turn	0	0	1	Day	Dry	Not Coded
452	0.000	04/24/14	Fri	0910	Rear-End	0	0	1	Day	Dry	Not Coded
453	0.000	04/24/14	Fri	1215	Not Coded	0	0	1	Day	Dry	Not Coded
454	0.000	04/25/14	Sat	1016	Rear-End	0	0	1	Day	Dry	Not Coded
455	0.000	04/25/14	Sat	0807	Sideswipe	0	0	1	Day	Dry	Not Coded
456	0.000	04/25/14	Sat	1032	Angle	0	0	1	Day	Dry	Not Coded
457	0.000	04/26/14	Sun	1440	Rear-End	0	0	1	Day	Dry	Not Coded
458	0.000	04/26/14	Sun	1908	Rear-End	0	0	1	Unknown	Dry	Not Coded
459	0.000	04/26/14	Sun	2317	Rear-End	0	0	1	Night	Dry	Not Coded
460	0.000	04/27/14	Mon	1725	Head-On	0	0	1	Day	Dry	Not Coded
461	0.000	04/27/14	Mon	0141	Backed Into	0	0	1	Night	Dry	Not Coded
462	0.000	04/28/14	Tue	0800	Rear-End	0	0	1	Day	Dry	Not Coded
463	0.000	04/28/14	Tue	1430	Rear-End	0	0	1	Day	Dry	Not Coded
464	0.000	04/28/14	Tue	1753	Parked Motor Vehicle	0	0	1	Day	Dry	Not Coded
465	0.000	04/28/14	Tue	1800	Left-Turn	0	0	1	Day	Dry	Not Coded
466	0.000	04/29/14	Wed	0848	Left-Turn	0	0	1	Day	Dry	Not Coded
467	0.000	04/29/14	Wed	2023	Left-Turn	0	0	1	Night	Dry	Not Coded
468	0.000	04/30/14	Thu	2300	Rear-End	0	1	0	Night	Dry	Not Coded
469	0.000	04/30/14	Thu	1634	Rear-End	0	0	1	Day	Dry	Not Coded
470	0.000	04/30/14	Thu	0810	Rear-End	0	0	1	Day	Dry	Not Coded
471	0.000	04/30/14	Thu	0803	Angle	0	0	1	Day	Dry	Not Coded
472	0.000	05/01/14	Fri	1011	Rear-End	0	0	1	Day	Dry	Not Coded
473	0.000	05/01/14	Fri	2300	Left-Turn	0	1	0	Night	Dry	Not Coded
474	0.000	05/02/14	Sat	1920	Rear-End	0	0	1	Day	Dry	Not Coded
475	0.000	05/02/14	Sat	1750	Parked Motor Vehicle	0	0	1	Day	Dry	Not Coded
476	0.000	05/03/14	Sun	1650	Left-Turn	0	0	1	Day	Wet	Not Coded
477	0.000	05/03/14	Sun	1410	Angle	0	0	1	Day	Dry	Not Coded
478	0.000	05/04/14	Mon	2100	Angle	0	0	1	Night	Dry	Not Coded
479	0.000	05/04/14	Mon	1422	Other Non-Collision	0	0	1	Day	Dry	Not Coded
480	0.000	05/05/14	Tue	1600	Right-Turn	0	0	1	Day	Dry	Not Coded
481	0.000	05/05/14	Tue	0853	Angle	0	0	1	Day	Dry	Not Coded
482	0.000	05/05/14	Tue	2232	Rear-End	0	0	1	Night	Dry	Not Coded
483	0.000	05/05/14	Tue	1250	Left-Turn	0	0	1	Day	Dry	Not Coded
484	0.000	05/05/14	Tue	1700	Left-Turn	0	0	1	Day	Dry	Not Coded
485	0.000	05/05/14	Tue	2150	Left-Turn	0	0	1	Night	Dry	Not Coded
486	0.000	05/06/14	Wed	1755	Rear-End	0	0	1	Day	Dry	Not Coded
487	0.000	05/06/14	Wed	0925	Sideswipe	0	0	1	Day	Dry	Not Coded
488	0.000	05/07/14	Thu	1456	Sideswipe	0	0	1	Day	Dry	Not Coded
489	0.000	05/07/14	Thu	1455	Rear-End	0	0	1	Day	Dry	Not Coded
490	0.000	05/07/14	Thu	1109	Fence	0	0	1	Day	Dry	Not Coded
491	0.000	05/07/14	Thu	1025	Left-Turn	0	0	1	Day	Dry	Not Coded
492	0.000	05/08/14	Fri	0637	Left-Turn	0	0	1	Day	Dry	Not Coded
493	0.000	05/08/14	Fri	1627	Right-Turn	0	0	1	Day	Dry	Not Coded
494	0.000	05/08/14	Fri	1251	Backed Into	0	0	1	Day	Dry	Not Coded
495	0.000	05/08/14	Fri	1530	Rear-End	0	1	0	Day	Dry	Not Coded

State of Florida Department of Transportation
CRASH SUMMARY

SECTION: Ludlam Trail Corridor f — STATE ROUTE: #N/A
ROADWAY LIMITS: 0 — M.P. 0.000 TO 0.000 — ENGINEER: 0
STUDY PERIOD: FROM 1/ 2014 TO 12/ 2014 — COUNTY: Miami-Dade

No.	MILE POST	DATE	DAY	TIME	CRASH TYPE	FATAL	INJURIES	PROP DAM	DAY / NIGHT	WET / DRY	CONTRIBUTING CAUSE (VEHICLE ONLY)
496	0.000	05/08/14	Fri	1718	Rear-End	0	1	0	Day	Dry	Not Coded
497	0.000	05/09/14	Sat	1800	Angle	0	1	0	Day	Dry	Not Coded
498	0.000	05/09/14	Sat	0654	Angle	0	0	1	Day	Dry	Not Coded
499	0.000	05/09/14	Sat	0800	Overturn/Rollover	0	0	1	Day	Dry	Not Coded
500	0.000	05/10/14	Sun	0138	Left-Turn	0	0	1	Night	Dry	Not Coded
501	0.000	05/10/14	Sun	1425	Rear-End	0	0	1	Day	Dry	Not Coded
502	0.000	05/10/14	Sun	1836	Rear-End	0	1	0	Day	Dry	Not Coded
503	0.000	05/10/14	Sun	1125	Angle	0	1	0	Day	Dry	Not Coded
504	0.000	05/10/14	Sun	1214	Backed Into	0	0	1	Day	Dry	Not Coded
505	0.000	05/12/14	Tue	0805	Sideswipe	0	0	1	Day	Dry	Not Coded
506	0.000	05/12/14	Tue	0915	Left-Turn	0	1	0	Day	Dry	Not Coded
507	0.000	05/12/14	Tue	1100	Rear-End	0	0	1	Day	Dry	Not Coded
508	0.000	05/12/14	Tue	2135	Not Coded	0	0	1	Night	Dry	Not Coded
509	0.000	05/12/14	Tue	0930	Angle	0	0	1	Day	Dry	Not Coded
510	0.000	05/12/14	Tue	0700	Rear-End	0	0	1	Day	Dry	Not Coded
511	0.000	05/12/14	Tue	1509	Sideswipe	0	0	1	Day	Dry	Not Coded
512	0.000	05/12/14	Tue	1422	Rear-End	0	0	1	Day	Dry	Not Coded
513	0.000	05/13/14	Wed	1605	Angle	0	0	1	Day	Dry	Not Coded
514	0.000	05/13/14	Wed	1005	Not Coded	0	0	1	Day	Dry	Not Coded
515	0.000	05/13/14	Wed	1838	Rear-End	0	0	1	Day	Dry	Not Coded
516	0.000	05/13/14	Wed	1645	Angle	0	1	0	Day	Dry	Not Coded
517	0.000	05/13/14	Wed	0725	Rear-End	0	1	0	Day	Dry	Not Coded
518	0.000	05/13/14	Wed	1840	Rear-End	0	0	1	Day	Dry	Not Coded
519	0.000	05/14/14	Thu	0802	Angle	0	1	0	Day	Dry	Not Coded
520	0.000	05/14/14	Thu	1443	Sideswipe	0	0	1	Day	Dry	Not Coded
521	0.000	05/14/14	Thu	1610	Rear-End	0	0	1	Day	Dry	Not Coded
522	0.000	05/14/14	Thu	1658	Rear-End	0	0	1	Day	Dry	Not Coded
523	0.000	05/14/14	Thu	1740	Left-Turn	0	0	1	Day	Dry	Not Coded
524	0.000	05/14/14	Thu	0720	Backed Into	0	0	1	Day	Dry	Not Coded
525	0.000	05/14/14	Thu	1535	Parked Motor Vehicle	0	0	1	Day	Dry	Not Coded
526	0.000	05/14/14	Thu	1922	Rear-End	0	0	1	Day	Dry	Not Coded
527	0.000	05/14/14	Thu	0818	Rear-End	0	0	1	Day	Dry	Not Coded
528	0.000	05/14/14	Thu	1445	Left-Turn	0	0	1	Day	Dry	Not Coded
529	0.000	05/14/14	Thu	0826	Rear-End	0	0	1	Day	Dry	Not Coded
530	0.000	05/15/14	Fri	1414	Sideswipe	0	1	0	Day	Wet	Not Coded
531	0.000	05/15/14	Fri	1245	Sideswipe	0	1	0	Day	Wet	Not Coded
532	0.000	05/15/14	Fri	0720	Other Post, Pole Or Support	0	0	1	Day	Dry	Not Coded
533	0.000	05/15/14	Fri	0910	Left-Turn	0	0	1	Day	Wet	Not Coded
534	0.000	05/15/14	Fri	1520	Rear-End	0	0	1	Unknown	Other	Not Coded
535	0.000	05/15/14	Fri	0820	Left-Turn	0	0	1	Day	Wet	Not Coded
536	0.000	05/16/14	Sat	1754	Rear-End	0	0	1	Day	Dry	Not Coded
537	0.000	05/16/14	Sat	0839	Left-Turn	0	0	1	Day	Wet	Not Coded
538	0.000	05/16/14	Sat	1700	Left-Turn	0	0	1	Day	Dry	Not Coded
539	0.000	05/17/14	Sun	1315	Angle	0	0	1	Day	Dry	Not Coded
540	0.000	05/17/14	Sun	1822	Rear-End	0	0	1	Unknown	Other	Not Coded
541	0.000	05/17/14	Sun	1755	Rear-End	0	0	1	Day	Dry	Not Coded
542	0.000	05/17/14	Sun	1600	Rear-End	0	1	0	Day	Dry	Not Coded
543	0.000	05/18/14	Mon	0415	Rear-End	0	0	1	Night	Dry	Not Coded
544	0.000	05/18/14	Mon	2040	Angle	0	0	1	Night	Dry	Not Coded
545	0.000	05/18/14	Mon	1446	Rear-End	0	0	1	Day	Dry	Not Coded
546	0.000	05/19/14	Tue	0925	Rear-End	0	0	1	Day	Dry	Not Coded
547	0.000	05/19/14	Tue	1620	Rear-End	0	1	0	Day	Dry	Not Coded
548	0.000	05/19/14	Tue	0945	Rear-End	0	0	1	Day	Dry	Not Coded
549	0.000	05/19/14	Tue	1543	Backed Into	0	0	1	Day	Dry	Not Coded
550	0.000	05/20/14	Wed	1912	Not Coded	0	0	1	Day	Dry	Not Coded
551	0.000	05/20/14	Wed	1218	Rear-End	0	0	1	Day	Dry	Not Coded
552	0.000	05/20/14	Wed	1126	Sideswipe	0	0	1	Day	Dry	Not Coded
553	0.000	05/20/14	Wed	1217	Rear-End	0	0	1	Day	Dry	Not Coded
554	0.000	05/20/14	Wed	1338	Angle	0	0	1	Day	Dry	Not Coded
555	0.000	05/21/14	Thu	0014	Angle	0	0	1	Night	Dry	Not Coded
556	0.000	05/21/14	Thu	1721	Rear-End	0	0	1	Day	Dry	Not Coded
557	0.000	05/21/14	Thu	1546	Rear-End	0	0	1	Unknown	Other	Not Coded
558	0.000	05/21/14	Thu	1708	Parked Motor Vehicle	0	0	1	Day	Dry	Not Coded
559	0.000	05/21/14	Thu	2140	Rear-End	0	0	1	Night	Dry	Not Coded
560	0.000	05/21/14	Thu	1803	Rear-End	0	0	1	Day	Dry	Not Coded
561	0.000	05/21/14	Thu	1315	Left-Turn	0	0	1	Day	Dry	Not Coded
562	0.000	05/22/14	Fri	0934	Rear-End	0	0	1	Day	Dry	Not Coded
563	0.000	05/22/14	Fri	1012	Rear-End	0	0	1	Day	Dry	Not Coded
564	0.000	05/22/14	Fri	0032	Angle	0	0	1	Night	Dry	Not Coded

State of Florida Department of Transportation
CRASH SUMMARY

SECTION: Ludlam Trail Corridor f | STATE ROUTE: #N/A
ROADWAY LIMITS: 0 | M.P. 0.000 TO 0.000 | ENGINEER: 0
STUDY PERIOD: FROM 1/ 2014 TO 12/ 2014 | COUNTY: Miami-Dade

No.	MILE POST	DATE	DAY	TIME	CRASH TYPE	FATAL	INJURIES	PROP DAM	DAY / NIGHT	WET / DRY	CONTRIBUTING CAUSE (VEHICLE ONLY)
565	0.000	05/22/14	Fri	1720	Left-Turn	0	0	1	Day	Dry	Not Coded
566	0.000	05/22/14	Fri	1214	Sideswipe	0	1	0	Day	Dry	Not Coded
567	0.000	05/22/14	Fri	0823	Angle	0	0	1	Day	Dry	Not Coded
568	0.000	05/23/14	Sat	2310	Rear-End	0	1	0	Night	Dry	Not Coded
569	0.000	05/23/14	Sat	1005	Angle	0	0	1	Night	Dry	Not Coded
570	0.000	05/23/14	Sat	2010	Pedalcycle	0	0	1	Night	Dry	Not Coded
571	0.000	05/23/14	Sat	1136	Sideswipe	0	0	1	Day	Dry	Not Coded
572	0.000	05/24/14	Sun	1622	Rear-End	0	0	1	Day	Dry	Not Coded
573	0.000	05/24/14	Sun	1030	Rear-End	0	0	1	Day	Dry	Not Coded
574	0.000	05/24/14	Sun	1722	Rear-End	0	0	1	Day	Dry	Not Coded
575	0.000	05/25/14	Mon	0253	Rear-End	0	0	1	Night	Dry	Not Coded
576	0.000	05/25/14	Mon	1653	Sideswipe	0	1	0	Day	Dry	Not Coded
577	0.000	05/27/14	Wed	1920	Rear-End	0	0	1	Day	Dry	Not Coded
578	0.000	05/27/14	Wed	0910	Angle	0	0	1	Day	Dry	Not Coded
579	0.000	05/27/14	Wed	2205	Sideswipe	0	0	1	Night	Dry	Not Coded
580	0.000	05/28/14	Thu	0825	Parked Motor Vehicle	0	0	1	Day	Dry	Not Coded
581	0.000	05/28/14	Thu	1537	Angle	0	0	1	Day	Dry	Not Coded
582	0.000	05/28/14	Thu	1729	Rear-End	0	0	1	Day	Dry	Not Coded
583	0.000	05/28/14	Thu	0835	Left-Turn	0	0	1	Day	Dry	Not Coded
584	0.000	05/28/14	Thu	1911	Rear-End	0	0	1	Day	Dry	Not Coded
585	0.000	05/29/14	Fri	1031	Rear-End	0	0	1	Day	Dry	Not Coded
586	0.000	05/29/14	Fri	1455	Left-Turn	0	0	1	Day	Dry	Not Coded
587	0.000	05/29/14	Fri	0925	Rear-End	0	0	1	Day	Dry	Not Coded
588	0.000	05/29/14	Fri	1449	Rear-End	0	0	1	Day	Dry	Not Coded
589	0.000	05/29/14	Fri	1407	Angle	0	0	1	Day	Dry	Not Coded
590	0.000	05/29/14	Fri	1833	Rear-End	0	0	1	Day	Dry	Not Coded
591	0.000	05/30/14	Sat	1322	Backed Into	0	0	1	Day	Dry	Not Coded
592	0.000	05/30/14	Sat	1130	Sideswipe	0	0	1	Day	Dry	Not Coded
593	0.000	05/30/14	Sat	1757	Rear-End	0	0	1	Day	Dry	Not Coded
594	0.000	05/30/14	Sat	1746	Angle	0	0	1	Day	Dry	Not Coded
595	0.000	05/30/14	Sat	1754	Rear-End	0	0	1	Day	Dry	Not Coded
596	0.000	05/30/14	Sat	0950	Rear-End	0	0	1	Day	Dry	Not Coded
597	0.000	05/31/14	Sun	1447	Rear-End	0	0	1	Day	Dry	Not Coded
598	0.000	05/31/14	Sun	1502	Sideswipe	0	0	1	Day	Dry	Not Coded
599	0.000	06/01/14	Mon	1703	Angle	0	0	1	Day	Dry	Not Coded
600	0.000	06/02/14	Tue	0723	Rear-End	0	0	1	Day	Dry	Not Coded
601	0.000	06/02/14	Tue	1306	Rear-End	0	0	1	Day	Wet	Not Coded
602	0.000	06/02/14	Tue	1720	Rear-End	0	0	1	Day	Dry	Not Coded
603	0.000	06/02/14	Tue	0830	Rear-End	0	0	1	Day	Wet	Not Coded
604	0.000	06/02/14	Tue	1735	Rear-End	0	0	1	Day	Wet	Not Coded
605	0.000	06/02/14	Tue	1653	Left-Turn	0	0	1	Day	Dry	Not Coded
606	0.000	06/03/14	Wed	1230	Angle	0	0	1	Day	Dry	Not Coded
607	0.000	06/03/14	Wed	1245	Right-Turn	0	0	1	Day	Dry	Not Coded
608	0.000	06/03/14	Wed	1750	Rear-End	0	0	1	Day	Dry	Not Coded
609	0.000	06/03/14	Wed	1230	Not Coded	0	0	1	Day	Dry	Not Coded
610	0.000	06/03/14	Wed	1740	Not Coded	0	0	1	Day	Dry	Not Coded
611	0.000	06/03/14	Wed	1711	Angle	0	0	1	Day	Dry	Not Coded
612	0.000	06/04/14	Thu	0740	Pedalcycle	0	0	1	Day	Dry	Not Coded
613	0.000	06/04/14	Thu	0817	Angle	0	1	0	Day	Dry	Not Coded
614	0.000	06/04/14	Thu	1008	Left-Turn	0	0	1	Day	Dry	Not Coded
615	0.000	06/05/14	Fri	0950	Rear-End	0	0	1	Day	Dry	Not Coded
616	0.000	06/05/14	Fri	1713	Rear-End	0	0	1	Day	Dry	Not Coded
617	0.000	06/05/14	Fri	1719	Rear-End	0	0	1	Day	Dry	Not Coded
618	0.000	06/05/14	Fri	0900	Angle	0	1	0	Day	Dry	Not Coded
619	0.000	06/06/14	Sat	1535	Rear-End	0	0	1	Day	Dry	Not Coded
620	0.000	06/06/14	Sat	0819	Left-Turn	0	0	1	Day	Dry	Not Coded
621	0.000	06/06/14	Sat	1846	Backed Into	0	1	0	Day	Dry	Not Coded
622	0.000	06/07/14	Sun	1435	Sideswipe	0	0	1	Day	Dry	Not Coded
623	0.000	06/07/14	Sun	0600	Pedalcycle	0	0	1	Night	Dry	Not Coded
624	0.000	06/07/14	Sun	0935	Backed Into	0	0	1	Day	Dry	Not Coded
625	0.000	06/08/14	Mon	1545	Rear-End	0	1	0	Day	Wet	Not Coded
626	0.000	06/08/14	Mon	1400	Rear-End	0	0	1	Day	Wet	Not Coded
627	0.000	06/08/14	Mon	1805	Not Coded	0	0	1	Day	Wet	Not Coded
628	0.000	06/09/14	Tue	1802	Rear-End	0	0	1	Day	Dry	Not Coded
629	0.000	06/09/14	Tue	1448	Right-Turn	0	0	1	Day	Dry	Not Coded
630	0.000	06/09/14	Tue	1545	Right-Turn	0	0	1	Day	Dry	Not Coded
631	0.000	06/10/14	Wed	1702	Rear-End	0	0	1	Day	Dry	Not Coded
632	0.000	06/10/14	Wed	1100	Right-Turn	0	0	1	Day	Wet	Not Coded
633	0.000	06/10/14	Wed	1719	Left-Turn	0	0	1	Unknown	Other	Not Coded

State of Florida Department of Transportation
CRASH SUMMARY

SECTION: Ludlam Trail Corridor f — STATE ROUTE: #N/A
ROADWAY LIMITS: 0 — M.P. 0.000 TO 0.000 — ENGINEER: 0
STUDY PERIOD: FROM 1/ 2014 TO 12/ 2014 — COUNTY: Miami-Dade

No.	MILE POST	DATE	DAY	TIME	CRASH TYPE	FATAL	INJURIES	PROP DAM	DAY / NIGHT	WET / DRY	CONTRIBUTING CAUSE (VEHICLE ONLY)
634	0.000	06/10/14	Wed	1600	Left-Turn	0	0	1	Day	Dry	Not Coded
635	0.000	06/10/14	Wed	0900	Rear-End	0	0	1	Day	Dry	Not Coded
636	0.000	06/11/14	Thu	1945	Left-Turn	0	0	1	Day	Dry	Not Coded
637	0.000	06/11/14	Thu	1608	Sideswipe	0	0	1	Unknown	Other	Not Coded
638	0.000	06/12/14	Fri	1645	Angle	0	0	1	Day	Wet	Not Coded
639	0.000	06/12/14	Fri	1231	Rear-End	0	0	1	Day	Dry	Not Coded
640	0.000	06/12/14	Fri	1750	Rear-End	0	0	1	Day	Dry	Not Coded
641	0.000	06/12/14	Fri	0000	Sideswipe	0	1	0	Day	Wet	Not Coded
642	0.000	06/12/14	Fri	1726	Angle	0	0	1	Day	Dry	Not Coded
643	0.000	06/12/14	Fri	1140	Sideswipe	0	0	1	Day	Dry	Not Coded
644	0.000	06/12/14	Fri	2340	Rear-End	0	0	1	Night	Wet	Not Coded
645	0.000	06/13/14	Sat	1845	Guardrail End	0	1	0	Night	Dry	Not Coded
646	0.000	06/13/14	Sat	1230	Rear-End	0	0	1	Day	Dry	Not Coded
647	0.000	06/13/14	Sat	1230	Rear-End	0	0	1	Day	Dry	Not Coded
648	0.000	06/13/14	Sat	1249	Rear-End	0	0	1	Day	Dry	Not Coded
649	0.000	06/13/14	Sat	1913	Rear-End	0	0	1	Day	Wet	Not Coded
650	0.000	06/14/14	Sun	1545	Sideswipe	0	0	1	Day	Dry	Not Coded
651	0.000	06/14/14	Sun	1035	Left-Turn	0	0	1	Day	Dry	Not Coded
652	0.000	06/14/14	Sun	2145	Rear-End	0	0	1	Night	Dry	Not Coded
653	0.000	06/14/14	Sun	2221	Rear-End	0	0	1	Night	Dry	Not Coded
654	0.000	06/15/14	Mon	0022	Left-Turn	0	0	1	Night	Wet	Not Coded
655	0.000	06/15/14	Mon	2300	Angle	0	1	0	Night	Dry	Not Coded
656	0.000	06/16/14	Tue	1730	Rear-End	0	0	1	Day	Dry	Not Coded
657	0.000	06/16/14	Tue	1748	Left-Turn	0	0	1	Day	Dry	Not Coded
658	0.000	06/17/14	Wed	2000	Backed Into	0	1	0	Night	Dry	Not Coded
659	0.000	06/17/14	Wed	0705	Left-Turn	0	0	1	Day	Dry	Not Coded
660	0.000	06/17/14	Wed	1505	Rear-End	0	0	1	Day	Dry	Not Coded
661	0.000	06/17/14	Wed	0939	Angle	0	0	1	Day	Wet	Not Coded
662	0.000	06/17/14	Wed	1347	Sideswipe	0	0	1	Day	Dry	Not Coded
663	0.000	06/17/14	Wed	1447	Angle	0	0	1	Day	Dry	Not Coded
664	0.000	06/17/14	Wed	1655	Rear-End	0	0	1	Day	Dry	Not Coded
665	0.000	06/17/14	Wed	1330	Angle	0	0	1	Day	Dry	Not Coded
666	0.000	06/17/14	Wed	0745	Rear-End	0	0	1	Day	Dry	Not Coded
667	0.000	06/18/14	Thu	2155	Rear-End	0	0	1	Night	Dry	Not Coded
668	0.000	06/18/14	Thu	0740	Sideswipe	0	0	1	Day	Dry	Not Coded
669	0.000	06/18/14	Thu	1818	Left-Turn	0	0	1	Day	Dry	Not Coded
670	0.000	06/18/14	Thu	0928	Angle	0	1	0	Day	Dry	Not Coded
671	0.000	06/20/14	Sat	1716	Left-Turn	0	0	1	Day	Wet	Not Coded
672	0.000	06/20/14	Sat	1143	Rear-End	0	0	1	Day	Dry	Not Coded
673	0.000	06/20/14	Sat	1737	Left-Turn	0	1	0	Day	Wet	Not Coded
674	0.000	06/20/14	Sat	0850	Backed Into	0	0	1	Day	Dry	Not Coded
675	0.000	06/20/14	Sat	1618	Angle	0	0	1	Day	Wet	Not Coded
676	0.000	06/21/14	Sun	1737	Sideswipe	0	0	1	Day	Dry	Not Coded
677	0.000	06/21/14	Sun	1020	Angle	0	0	1	Day	Dry	Not Coded
678	0.000	06/21/14	Sun	1155	Sideswipe	0	0	1	Day	Dry	Not Coded
679	0.000	06/22/14	Mon	1425	Parked Motor Vehicle	0	0	1	Day	Dry	Not Coded
680	0.000	06/22/14	Mon	1049	Left-Turn	0	0	1	Day	Dry	Not Coded
681	0.000	06/23/14	Tue	0740	Angle	0	0	1	Day	Dry	Not Coded
682	0.000	06/23/14	Tue	1559	Angle	0	1	0	Day	Wet	Not Coded
683	0.000	06/23/14	Tue	1328	Sideswipe	0	0	1	Day	Dry	Not Coded
684	0.000	06/24/14	Wed	0830	Rear-End	0	0	1	Day	Dry	Not Coded
685	0.000	06/24/14	Wed	1105	Sideswipe	0	0	1	Day	Dry	Not Coded
686	0.000	06/24/14	Wed	0950	Rear-End	0	0	1	Day	Dry	Not Coded
687	0.000	06/25/14	Thu	2200	Sideswipe	0	1	0	Night	Wet	Not Coded
688	0.000	06/25/14	Thu	0918	Angle	0	0	1	Day	Dry	Not Coded
689	0.000	06/25/14	Thu	1613	Rear-End	0	0	1	Day	Dry	Not Coded
690	0.000	06/25/14	Thu	1715	Rear-End	0	0	1	Day	Dry	Not Coded
691	0.000	06/25/14	Thu	1600	Angle	0	1	0	Day	Dry	Not Coded
692	0.000	06/25/14	Thu	0848	Left-Turn	0	0	1	Day	Dry	Not Coded
693	0.000	06/25/14	Thu	1553	Rear-End	0	0	1	Day	Dry	Not Coded
694	0.000	06/26/14	Fri	0851	Sideswipe	0	1	0	Day	Dry	Not Coded
695	0.000	06/26/14	Fri	2155	Sideswipe	0	1	0	Night	Dry	Not Coded
696	0.000	06/26/14	Fri	1234	Rear-End	0	0	1	Day	Dry	Not Coded
697	0.000	06/26/14	Fri	2041	Rear-End	0	1	0	Night	Dry	Not Coded
698	0.000	06/26/14	Fri	0745	Sideswipe	0	0	1	Day	Dry	Not Coded
699	0.000	06/26/14	Fri	1425	Rear-End	0	0	1	Day	Dry	Not Coded
700	0.000	06/26/14	Fri	1800	Left-Turn	0	0	1	Day	Dry	Not Coded
701	0.000	06/27/14	Sat	1445	Sideswipe	0	0	1	Day	Dry	Not Coded
702	0.000	06/27/14	Sat	1510	Left-Turn	0	0	1	Day	Dry	Not Coded

State of Florida Department of Transportation
CRASH SUMMARY

SECTION: Ludlam Trail Corridor f — STATE ROUTE: #N/A
ROADWAY LIMITS: 0 — M.P. 0.000 TO 0.000 — ENGINEER: 0
STUDY PERIOD: FROM 1/ 2014 TO 12/ 2014 — COUNTY: Miami-Dade

No.	MILE POST	DATE	DAY	TIME	CRASH TYPE	FATAL	INJURIES	PROP DAM	DAY / NIGHT	WET / DRY	CONTRIBUTING CAUSE (VEHICLE ONLY)
703	0.000	06/27/14	Sat	0826	Angle	0	0	1	Day	Dry	Not Coded
704	0.000	06/28/14	Sun	1540	Rear-End	0	0	1	Day	Dry	Not Coded
705	0.000	06/28/14	Sun	2044	Rear-End	0	0	1	Day	Dry	Not Coded
706	0.000	06/28/14	Sun	1427	Angle	0	0	1	Day	Dry	Not Coded
707	0.000	06/29/14	Mon	0100	Sideswipe	0	0	1	Night	Dry	Not Coded
708	0.000	06/29/14	Mon	1857	Rear-End	0	0	1	Day	Wet	Not Coded
709	0.000	06/30/14	Tue	1415	Sideswipe	0	0	1	Day	Dry	Not Coded
710	0.000	06/30/14	Tue	1715	Backed Into	0	0	1	Day	Wet	Not Coded
711	0.000	06/30/14	Tue	1705	Rear-End	0	0	1	Day	Wet	Not Coded
712	0.000	07/01/14	Wed	1725	Rear-End	0	0	1	Day	Dry	Not Coded
713	0.000	07/01/14	Wed	1230	Sideswipe	0	1	0	Day	Dry	Not Coded
714	0.000	07/01/14	Wed	1451	Rear-End	0	0	1	Day	Dry	Not Coded
715	0.000	07/01/14	Wed	1828	Right-Turn	0	1	0	Day	Dry	Not Coded
716	0.000	07/01/14	Wed	1122	Pedalcycle	0	0	1	Day	Dry	Not Coded
717	0.000	07/02/14	Thu	1505	Rear-End	0	0	1	Day	Wet	Not Coded
718	0.000	07/02/14	Thu	0850	Sideswipe	0	0	1	Day	Dry	Not Coded
719	0.000	07/02/14	Thu	1813	Angle	0	1	0	Day	Dry	Not Coded
720	0.000	07/02/14	Thu	0735	Head-On	0	0	1	Day	Dry	Not Coded
721	0.000	07/02/14	Thu	0828	Not Coded	0	0	1	Day	Dry	Not Coded
722	0.000	07/03/14	Fri	0805	Angle	0	1	0	Day	Dry	Not Coded
723	0.000	07/03/14	Fri	0725	Parked Motor Vehicle	0	0	1	Day	Dry	Not Coded
724	0.000	07/03/14	Fri	0849	Left-Turn	0	0	1	Unknown	Other	Not Coded
725	0.000	07/03/14	Fri	1715	Angle	0	0	1	Day	Dry	Not Coded
726	0.000	07/03/14	Fri	1135	Not Coded	0	1	0	Day	Dry	Not Coded
727	0.000	07/03/14	Fri	1318	Rear-End	0	0	1	Day	Dry	Not Coded
728	0.000	07/03/14	Fri	1410	Sideswipe	0	0	1	Day	Dry	Not Coded
729	0.000	07/05/14	Sun	1319	Backed Into	0	0	1	Day	Dry	Not Coded
730	0.000	07/06/14	Mon	1343	Rear-End	0	1	0	Day	Dry	Not Coded
731	0.000	07/07/14	Tue	1820	Sideswipe	0	0	1	Night	Wet	Not Coded
732	0.000	07/07/14	Tue	2100	Rear-End	0	0	1	Night	Dry	Not Coded
733	0.000	07/07/14	Tue	1320	Rear-End	0	0	1	Day	Dry	Not Coded
734	0.000	07/08/14	Wed	1721	Rear-End	0	0	1	Day	Wet	Not Coded
735	0.000	07/08/14	Wed	1518	Rear-End	0	0	1	Unknown	Other	Not Coded
736	0.000	07/08/14	Wed	0906	Rear-End	0	0	1	Day	Dry	Not Coded
737	0.000	07/08/14	Wed	1500	Rear-End	0	0	1	Day	Wet	Not Coded
738	0.000	07/08/14	Wed	0920	Left-Turn	0	1	0	Day	Dry	Not Coded
739	0.000	07/08/14	Wed	1412	Rear-End	0	0	1	Day	Wet	Not Coded
740	0.000	07/09/14	Thu	0800	Parked Motor Vehicle	0	0	1	Day	Dry	Not Coded
741	0.000	07/09/14	Thu	1440	Left-Turn	0	0	1	Day	Wet	Not Coded
742	0.000	07/09/14	Thu	1926	Left-Turn	0	0	1	Day	Wet	Not Coded
743	0.000	07/09/14	Thu	1339	Angle	0	0	1	Day	Wet	Not Coded
744	0.000	07/10/14	Fri	1443	Sideswipe	0	0	1	Day	Wet	Not Coded
745	0.000	07/11/14	Sat	1907	Right-Turn	0	0	1	Day	Dry	Not Coded
746	0.000	07/11/14	Sat	0900	Rear-End	0	0	1	Day	Dry	Not Coded
747	0.000	07/11/14	Sat	0818	Backed Into	0	0	1	Day	Dry	Not Coded
748	0.000	07/11/14	Sat	1510	Rear-End	0	0	1	Day	Dry	Not Coded
749	0.000	07/11/14	Sat	1420	Rear-End	0	0	1	Day	Dry	Not Coded
750	0.000	07/11/14	Sat	1552	Angle	0	0	1	Day	Dry	Not Coded
751	0.000	07/12/14	Sun	1450	Rear-End	0	0	1	Day	Dry	Not Coded
752	0.000	07/13/14	Mon	1316	Left-Turn	0	0	1	Day	Wet	Not Coded
753	0.000	07/13/14	Mon	1313	Sideswipe	0	0	1	Day	Dry	Not Coded
754	0.000	07/14/14	Tue	0905	Sideswipe	0	0	1	Day	Dry	Not Coded
755	0.000	07/14/14	Tue	0700	Angle	0	1	0	Day	Dry	Not Coded
756	0.000	07/14/14	Tue	0900	Rear-End	0	0	1	Day	Dry	Not Coded
757	0.000	07/15/14	Wed	1900	Rear-End	0	0	1	Day	Dry	Not Coded
758	0.000	07/15/14	Wed	0920	Rear-End	0	1	0	Day	Dry	Not Coded
759	0.000	07/15/14	Wed	1740	Angle	0	0	1	Day	Dry	Not Coded
760	0.000	07/16/14	Thu	1049	Rear-End	0	0	1	Day	Dry	Not Coded
761	0.000	07/16/14	Thu	1358	Right-Turn	0	0	1	Day	Wet	Not Coded
762	0.000	07/16/14	Thu	1350	Angle	0	0	1	Day	Dry	Not Coded
763	0.000	07/16/14	Thu	1830	Rear-End	0	0	1	Day	Dry	Not Coded
764	0.000	07/16/14	Thu	2045	Left-Turn	0	0	1	Night	Dry	Not Coded
765	0.000	07/16/14	Thu	0935	Left-Turn	0	0	1	Day	Dry	Not Coded
766	0.000	07/16/14	Thu	1445	Head-On	0	0	1	Night	Dry	Not Coded
767	0.000	07/16/14	Thu	1655	Left-Turn	0	0	1	Day	Wet	Not Coded
768	0.000	07/16/14	Thu	1546	Sideswipe	0	0	1	Day	Dry	Not Coded
769	0.000	07/16/14	Thu	0948	Rear-End	0	0	1	Day	Dry	Not Coded
770	0.000	07/16/14	Thu	1709	Left-Turn	0	0	1	Day	Dry	Not Coded
771	0.000	07/16/14	Thu	1030	Head-On	0	0	1	Day	Dry	Not Coded

State of Florida Department of Transportation
CRASH SUMMARY

SECTION: Ludlam Trail Corridor f | STATE ROUTE: #N/A
ROADWAY LIMITS: 0 | M.P. 0.000 TO 0.000 | ENGINEER: 0
STUDY PERIOD: FROM 1/ 2014 TO 12/ 2014 | COUNTY: Miami-Dade

No.	MILE POST	DATE	DAY	TIME	CRASH TYPE	FATAL	INJURIES	PROP DAM	DAY / NIGHT	WET / DRY	CONTRIBUTING CAUSE (VEHICLE ONLY)
772	0.000	07/17/14	Fri	1240	Angle	0	0	1	Day	Dry	Not Coded
773	0.000	07/17/14	Fri	1638	Left-Turn	0	0	1	Day	Dry	Not Coded
774	0.000	07/17/14	Fri	1409	Angle	0	0	1	Day	Dry	Not Coded
775	0.000	07/17/14	Fri	2100	Left-Turn	0	0	1	Night	Dry	Not Coded
776	0.000	07/17/14	Fri	0827	Angle	0	0	1	Day	Dry	Not Coded
777	0.000	07/17/14	Fri	1956	Backed Into	0	0	1	Day	Dry	Not Coded
778	0.000	07/18/14	Sat	1921	Rear-End	0	0	1	Night	Wet	Not Coded
779	0.000	07/18/14	Sat	0127	Rear-End	0	1	0	Night	Dry	Not Coded
780	0.000	07/18/14	Sat	0520	Angle	0	1	0	Night	Dry	Not Coded
781	0.000	07/18/14	Sat	1845	Sideswipe	0	0	1	Night	Dry	Not Coded
782	0.000	07/18/14	Sat	1810	Rear-End	0	0	1	Day	Dry	Not Coded
783	0.000	07/18/14	Sat	1110	Sideswipe	0	0	1	Day	Dry	Not Coded
784	0.000	07/18/14	Sat	1309	Right-Turn	0	0	1	Day	Dry	Not Coded
785	0.000	07/19/14	Sun	1746	Rear-End	0	0	1	Day	Dry	Not Coded
786	0.000	07/20/14	Mon	1002	Rear-End	0	0	1	Day	Dry	Not Coded
787	0.000	07/20/14	Mon	2222	Rear-End	0	0	1	Night	Dry	Not Coded
788	0.000	07/20/14	Mon	1216	Angle	0	0	1	Day	Dry	Not Coded
789	0.000	07/21/14	Tue	2200	Angle	0	0	1	Night	Dry	Not Coded
790	0.000	07/21/14	Tue	1030	Sideswipe	0	0	1	Day	Dry	Not Coded
791	0.000	07/21/14	Tue	0908	Rear-End	0	1	0	Day	Dry	Not Coded
792	0.000	07/21/14	Tue	1400	Rear-End	0	0	1	Day	Dry	Not Coded
793	0.000	07/21/14	Tue	1625	Parked Motor Vehicle	0	0	1	Day	Dry	Not Coded
794	0.000	07/22/14	Wed	0825	Rear-End	0	1	0	Day	Wet	Not Coded
795	0.000	07/23/14	Thu	2220	Right-Turn	0	0	1	Night	Dry	Not Coded
796	0.000	07/23/14	Thu	1530	Rear-End	0	0	1	Day	Dry	Not Coded
797	0.000	07/23/14	Thu	1215	Angle	0	0	1	Day	Wet	Not Coded
798	0.000	07/23/14	Thu	1135	Rear-End	0	0	1	Day	Wet	Not Coded
799	0.000	07/23/14	Thu	1350	Rear-End	0	0	1	Day	Wet	Not Coded
800	0.000	07/23/14	Thu	1432	Angle	0	0	1	Day	Wet	Not Coded
801	0.000	07/24/14	Fri	0000	Rear-End	0	0	1	Day	Dry	Not Coded
802	0.000	07/24/14	Fri	1938	Rear-End	0	0	1	Unknown	Dry	Not Coded
803	0.000	07/24/14	Fri	1320	Rear-End	0	0	1	Day	Dry	Not Coded
804	0.000	07/24/14	Fri	1703	Angle	0	0	1	Day	Dry	Not Coded
805	0.000	07/24/14	Fri	1025	Angle	0	0	1	Day	Dry	Not Coded
806	0.000	07/24/14	Fri	1324	Rear-End	0	0	1	Day	Dry	Not Coded
807	0.000	07/25/14	Sat	1532	Left-Turn	0	0	1	Day	Dry	Not Coded
808	0.000	07/25/14	Sat	1544	Sideswipe	0	0	1	Day	Dry	Not Coded
809	0.000	07/25/14	Sat	1530	Not Coded	0	0	1	Day	Dry	Not Coded
810	0.000	07/25/14	Sat	1130	Parked Motor Vehicle	0	1	0	Day	Wet	Not Coded
811	0.000	07/25/14	Sat	1240	Angle	0	1	0	Day	Dry	Not Coded
812	0.000	07/25/14	Sat	1852	Rear-End	0	0	1	Day	Dry	Not Coded
813	0.000	07/26/14	Sun	1635	Rear-End	0	0	1	Day	Dry	Not Coded
814	0.000	07/26/14	Sun	1728	Rear-End	0	0	1	Day	Dry	Not Coded
815	0.000	07/27/14	Mon	1830	Rear-End	0	0	1	Day	Dry	Not Coded
816	0.000	07/27/14	Mon	2155	Rear-End	0	0	1	Night	Dry	Not Coded
817	0.000	07/27/14	Mon	1030	Rear-End	0	1	0	Day	Dry	Not Coded
818	0.000	07/28/14	Tue	1840	Angle	0	0	1	Day	Dry	Not Coded
819	0.000	07/28/14	Tue	1035	Right-Turn	0	1	0	Day	Dry	Not Coded
820	0.000	07/29/14	Wed	0650	Angle	0	1	0	Day	Dry	Not Coded
821	0.000	07/29/14	Wed	1334	Angle	0	0	1	Day	Dry	Not Coded
822	0.000	07/29/14	Wed	2031	Rear-End	0	0	1	Night	Dry	Not Coded
823	0.000	07/29/14	Wed	1048	Angle	0	0	1	Day	Dry	Not Coded
824	0.000	07/30/14	Thu	1802	Rear-End	0	0	1	Day	Wet	Not Coded
825	0.000	07/30/14	Thu	1908	Rear-End	0	1	0	Night	Wet	Not Coded
826	0.000	07/30/14	Thu	1745	Sideswipe	0	0	1	Day	Wet	Not Coded
827	0.000	07/30/14	Thu	1815	Sideswipe	0	0	1	Night	Wet	Not Coded
828	0.000	07/30/14	Thu	1145	Not Coded	0	1	0	Day	Dry	Not Coded
829	0.000	07/31/14	Fri	1545	Rear-End	0	0	1	Day	Dry	Not Coded
830	0.000	07/31/14	Fri	1604	Left-Turn	0	0	1	Day	Wet	Not Coded
831	0.000	07/31/14	Fri	1820	Rear-End	0	1	0	Night	Dry	Not Coded
832	0.000	08/01/14	Sat	1530	Rear-End	0	0	1	Day	Dry	Not Coded
833	0.000	08/01/14	Sat	2315	Angle	0	0	1	Night	Dry	Not Coded
834	0.000	08/01/14	Sat	0745	Rear-End	0	0	1	Day	Dry	Not Coded
835	0.000	08/01/14	Sat	0920	Sideswipe	0	0	1	Day	Dry	Not Coded
836	0.000	08/01/14	Sat	1400	Rear-End	0	0	1	Day	Dry	Not Coded
837	0.000	08/01/14	Sat	0945	Rear-End	0	0	1	Day	Dry	Not Coded
838	0.000	08/02/14	Sun	1350	Angle	0	0	1	Day	Dry	Not Coded
839	0.000	08/02/14	Sun	1015	Parked Motor Vehicle	0	0	1	Day	Dry	Not Coded
840	0.000	08/02/14	Sun	1247	Rear-End	0	0	1	Day	Dry	Not Coded

State of Florida Department of Transportation
CRASH SUMMARY

SECTION: Ludlam Trail Corridor f — STATE ROUTE: #N/A
ROADWAY LIMITS: 0 — M.P. 0.000 TO 0.000 — ENGINEER: 0
STUDY PERIOD: FROM 1/ 2014 TO 12/ 2014 — COUNTY: Miami-Dade

No.	MILE POST	DATE	DAY	TIME	CRASH TYPE	FATAL	INJURIES	PROP DAM	DAY / NIGHT	WET / DRY	CONTRIBUTING CAUSE (VEHICLE ONLY)
841	0.000	08/02/14	Sun	0352	Rear-End	0	0	1	Night	Dry	Not Coded
842	0.000	08/02/14	Sun	1549	Rear-End	0	0	1	Day	Wet	Not Coded
843	0.000	08/02/14	Sun	0240	Sideswipe	0	0	1	Night	Dry	Not Coded
844	0.000	08/02/14	Sun	1430	Rear-End	0	0	1	Day	Dry	Not Coded
845	0.000	08/02/14	Sun	1730	Sideswipe	0	0	1	Day	Dry	Not Coded
846	0.000	08/04/14	Tue	1330	Sideswipe	0	0	1	Day	Dry	Not Coded
847	0.000	08/04/14	Tue	0700	Left-Turn	0	0	1	Day	Dry	Not Coded
848	0.000	08/04/14	Tue	2019	Rear-End	0	0	1	Night	Dry	Not Coded
849	0.000	08/04/14	Tue	1923	Rear-End	0	1	0	Day	Dry	Not Coded
850	0.000	08/05/14	Wed	1035	Angle	0	0	1	Day	Dry	Not Coded
851	0.000	08/05/14	Wed	1615	Angle	0	0	1	Day	Dry	Not Coded
852	0.000	08/05/14	Wed	1922	Sideswipe	0	0	1	Day	Dry	Not Coded
853	0.000	08/06/14	Thu	1627	Rear-End	0	0	1	Day	Dry	Not Coded
854	0.000	08/06/14	Thu	1110	Angle	0	1	0	Day	Dry	Not Coded
855	0.000	08/06/14	Thu	1515	Rear-End	0	0	1	Day	Dry	Not Coded
856	0.000	08/06/14	Thu	2033	Angle	0	0	1	Night	Dry	Not Coded
857	0.000	08/06/14	Thu	1102	Left-Turn	0	0	1	Day	Dry	Not Coded
858	0.000	08/06/14	Thu	1215	Rear-End	0	0	1	Day	Dry	Not Coded
859	0.000	08/06/14	Thu	1704	Rear-End	0	0	1	Day	Dry	Not Coded
860	0.000	08/07/14	Fri	1316	Sideswipe	0	0	1	Day	Dry	Not Coded
861	0.000	08/07/14	Fri	2131	Not Coded	0	0	1	Unknown	Other	Not Coded
862	0.000	08/07/14	Fri	1339	Rear-End	0	1	0	Day	Dry	Not Coded
863	0.000	08/07/14	Fri	0010	Angle	0	0	1	Day	Dry	Not Coded
864	0.000	08/07/14	Fri	1605	Right-Turn	0	0	1	Day	Dry	Not Coded
865	0.000	08/08/14	Sat	0645	Rear-End	0	1	0	Night	Wet	Not Coded
866	0.000	08/08/14	Sat	0504	Rear-End	0	1	0	Night	Dry	Not Coded
867	0.000	08/08/14	Sat	2349	Rear-End	0	0	1	Night	Wet	Not Coded
868	0.000	08/08/14	Sat	1935	Guardrail Face	0	0	1	Night	Dry	Not Coded
869	0.000	08/08/14	Sat	1448	Rear-End	0	0	1	Day	Dry	Not Coded
870	0.000	08/08/14	Sat	1324	Angle	0	0	1	Day	Dry	Not Coded
871	0.000	08/09/14	Sun	0950	Right-Turn	0	0	1	Day	Dry	Not Coded
872	0.000	08/09/14	Sun	1252	Angle	0	0	1	Day	Dry	Not Coded
873	0.000	08/09/14	Sun	1810	Sideswipe	0	1	0	Day	Dry	Not Coded
874	0.000	08/10/14	Mon	2233	Rear-End	0	0	1	Night	Dry	Not Coded
875	0.000	08/10/14	Mon	2052	Sideswipe	0	1	0	Night	Dry	Not Coded
876	0.000	08/11/14	Tue	1421	Rear-End	0	1	0	Day	Dry	Not Coded
877	0.000	08/11/14	Tue	1155	Rear-End	0	0	1	Day	Dry	Not Coded
878	0.000	08/11/14	Tue	1811	Backed Into	0	0	1	Day	Dry	Not Coded
879	0.000	08/11/14	Tue	1116	Angle	0	0	1	Day	Dry	Not Coded
880	0.000	08/11/14	Tue	1145	Not Coded	0	0	1	Day	Dry	Not Coded
881	0.000	08/11/14	Tue	1400	Left-Turn	0	0	1	Day	Dry	Not Coded
882	0.000	08/12/14	Wed	1815	Angle	0	1	0	Day	Dry	Not Coded
883	0.000	08/12/14	Wed	1401	Sideswipe	0	0	1	Day	Dry	Not Coded
884	0.000	08/12/14	Wed	0828	Rear-End	0	0	1	Day	Dry	Not Coded
885	0.000	08/12/14	Wed	1753	Angle	0	0	1	Day	Dry	Not Coded
886	0.000	08/12/14	Wed	1140	Left-Turn	0	0	1	Day	Dry	Not Coded
887	0.000	08/12/14	Wed	1414	Right-Turn	0	0	1	Day	Dry	Not Coded
888	0.000	08/12/14	Wed	1440	Sideswipe	0	0	1	Day	Dry	Not Coded
889	0.000	08/13/14	Thu	1930	Angle	0	0	1	Day	Dry	Not Coded
890	0.000	08/14/14	Fri	1811	Rear-End	0	1	0	Day	Wet	Not Coded
891	0.000	08/14/14	Fri	1120	Rear-End	0	0	1	Day	Dry	Not Coded
892	0.000	08/14/14	Fri	1823	Rear-End	0	0	1	Day	Wet	Not Coded
893	0.000	08/14/14	Fri	0720	Left-Turn	0	0	1	Day	Dry	Not Coded
894	0.000	08/14/14	Fri	1900	Rear-End	0	0	1	Day	Wet	Not Coded
895	0.000	08/15/14	Sat	1750	Angle	0	0	1	Night	Wet	Not Coded
896	0.000	08/15/14	Sat	1956	Rear-End	0	0	1	Unknown	Wet	Not Coded
897	0.000	08/15/14	Sat	2017	Sideswipe	0	1	0	Night	Wet	Not Coded
898	0.000	08/15/14	Sat	1529	Angle	0	0	1	Day	Wet	Not Coded
899	0.000	08/15/14	Sat	1741	Sideswipe	0	0	1	Day	Wet	Not Coded
900	0.000	08/15/14	Sat	1350	Left-Turn	0	0	1	Day	Wet	Not Coded
901	0.000	08/15/14	Sat	2244	Angle	0	1	0	Night	Dry	Not Coded
902	0.000	08/16/14	Sun	1550	Right-Turn	0	0	1	Day	Dry	Not Coded
903	0.000	08/16/14	Sun	0830	Sideswipe	0	0	1	Day	Dry	Not Coded
904	0.000	08/16/14	Sun	1325	Angle	0	0	1	Day	Dry	Not Coded
905	0.000	08/17/14	Mon	1756	Angle	0	1	0	Day	Dry	Not Coded
906	0.000	08/17/14	Mon	0859	Right-Turn	0	0	1	Night	Dry	Not Coded
907	0.000	08/17/14	Mon	0503	Sideswipe	0	0	1	Night	Dry	Not Coded
908	0.000	08/18/14	Tue	0815	Rear-End	0	1	0	Day	Dry	Not Coded
909	0.000	08/18/14	Tue	1319	Rear-End	0	0	1	Day	Dry	Not Coded

State of Florida Department of Transportation
CRASH SUMMARY

SECTION: Ludlam Trail Corridor f — STATE ROUTE: #N/A
ROADWAY LIMITS: 0 — M.P. 0.000 TO 0.000 — ENGINEER: 0
STUDY PERIOD: FROM 1/ 2014 TO 12/ 2014 — COUNTY: Miami-Dade

No.	MILE POST	DATE	DAY	TIME	CRASH TYPE	FATAL	INJURIES	PROP DAM	DAY / NIGHT	WET / DRY	CONTRIBUTING CAUSE (VEHICLE ONLY)
910	0.000	08/18/14	Tue	1832	Angle	0	0	1	Day	Dry	Not Coded
911	0.000	08/18/14	Tue	1706	Angle	0	0	1	Day	Dry	Not Coded
912	0.000	08/19/14	Wed	1530	Rear-End	0	1	0	Day	Dry	Not Coded
913	0.000	08/19/14	Wed	0900	Sideswipe	0	0	1	Day	Dry	Not Coded
914	0.000	08/19/14	Wed	1815	Angle	0	0	1	Day	Dry	Not Coded
915	0.000	08/19/14	Wed	1525	Rear-End	0	1	0	Day	Dry	Not Coded
916	0.000	08/19/14	Wed	1344	Rear-End	0	0	1	Day	Wet	Not Coded
917	0.000	08/19/14	Wed	1450	Rear-End	0	0	1	Day	Dry	Not Coded
918	0.000	08/20/14	Thu	1218	Rear-End	0	0	1	Day	Dry	Not Coded
919	0.000	08/20/14	Thu	1541	Rear-End	0	1	0	Day	Dry	Not Coded
920	0.000	08/20/14	Thu	0810	Other Fixed Object	0	1	0	Day	Dry	Not Coded
921	0.000	08/20/14	Thu	0710	Backed Into	0	1	0	Day	Dry	Not Coded
922	0.000	08/20/14	Thu	1553	Left-Turn	0	0	1	Day	Dry	Not Coded
923	0.000	08/20/14	Thu	1804	Backed Into	0	0	1	Day	Dry	Not Coded
924	0.000	08/20/14	Thu	0640	Angle	0	1	0	Day	Dry	Not Coded
925	0.000	08/21/14	Fri	1232	Angle	0	0	1	Day	Dry	Not Coded
926	0.000	08/21/14	Fri	0755	Left-Turn	0	0	1	Day	Dry	Not Coded
927	0.000	08/21/14	Fri	0910	Sideswipe	0	0	1	Day	Dry	Not Coded
928	0.000	08/22/14	Sat	1255	Sideswipe	0	0	1	Day	Dry	Not Coded
929	0.000	08/22/14	Sat	2110	Sideswipe	0	1	0	Night	Dry	Not Coded
930	0.000	08/22/14	Sat	1034	Sideswipe	0	0	1	Day	Dry	Not Coded
931	0.000	08/23/14	Sun	1729	Rear-End	0	0	1	Day	Dry	Not Coded
932	0.000	08/23/14	Sun	1720	Rear-End	0	0	1	Day	Dry	Not Coded
933	0.000	08/23/14	Sun	2051	Right-Turn	0	0	1	Night	Dry	Not Coded
934	0.000	08/24/14	Mon	1800	Rear-End	0	0	1	Day	Dry	Not Coded
935	0.000	08/25/14	Tue	1740	Rear-End	0	1	0	Day	Dry	Not Coded
936	0.000	08/25/14	Tue	0652	Rear-End	0	0	1	Night	Dry	Not Coded
937	0.000	08/25/14	Tue	0645	Sideswipe	0	0	1	Day	Dry	Not Coded
938	0.000	08/25/14	Tue	1750	Angle	0	0	1	Day	Wet	Not Coded
939	0.000	08/25/14	Tue	1534	Not Coded	0	0	1	Day	Wet	Not Coded
940	0.000	08/25/14	Tue	1051	Left-Turn	0	0	1	Day	Dry	Not Coded
941	0.000	08/25/14	Tue	1819	Sideswipe	0	0	1	Day	Wet	Not Coded
942	0.000	08/26/14	Wed	1615	Rear-End	0	0	1	Day	Dry	Not Coded
943	0.000	08/26/14	Wed	1843	Rear-End	0	0	1	Day	Dry	Not Coded
944	0.000	08/26/14	Wed	1400	Other Post, Pole Or Support	0	0	1	Day	Dry	Not Coded
945	0.000	08/26/14	Wed	1445	Rear-End	0	0	1	Day	Dry	Not Coded
946	0.000	08/26/14	Wed	0700	Left-Turn	0	0	1	Day	Dry	Not Coded
947	0.000	08/27/14	Thu	0815	Angle	0	0	1	Day	Dry	Not Coded
948	0.000	08/27/14	Thu	0945	Rear-End	0	0	1	Day	Dry	Not Coded
949	0.000	08/27/14	Thu	2002	Left-Turn	0	0	1	Night	Dry	Not Coded
950	0.000	08/27/14	Thu	1815	Backed Into	0	0	1	Day	Dry	Not Coded
951	0.000	08/27/14	Thu	2137	Angle	0	0	1	Night	Dry	Not Coded
952	0.000	08/27/14	Thu	2127	Sideswipe	0	0	1	Night	Dry	Not Coded
953	0.000	08/27/14	Thu	1257	Angle	0	0	1	Day	Dry	Not Coded
954	0.000	08/27/14	Thu	1330	Left-Turn	0	0	1	Day	Dry	Not Coded
955	0.000	08/27/14	Thu	1608	Left-Turn	0	0	1	Day	Dry	Not Coded
956	0.000	08/29/14	Sat	0739	Angle	0	1	0	Day	Dry	Not Coded
957	0.000	08/29/14	Sat	0757	Angle	0	0	1	Day	Dry	Not Coded
958	0.000	08/29/14	Sat	1458	Backed Into	0	1	0	Day	Dry	Not Coded
959	0.000	08/29/14	Sat	0910	Backed Into	0	0	1	Day	Dry	Not Coded
960	0.000	08/29/14	Sat	1110	Left-Turn	0	1	0	Day	Dry	Not Coded
961	0.000	08/29/14	Sat	2115	Rear-End	0	0	1	Day	Dry	Not Coded
962	0.000	08/29/14	Sat	1845	Angle	0	0	1	Day	Dry	Not Coded
963	0.000	08/29/14	Sat	1355	Left-Turn	0	0	1	Day	Dry	Not Coded
964	0.000	08/30/14	Sun	1433	Backed Into	0	0	1	Day	Dry	Not Coded
965	0.000	08/31/14	Mon	0444	Rear-End	0	0	1	Night	Wet	Not Coded
966	0.000	08/31/14	Mon	1726	Sideswipe	0	0	1	Day	Dry	Not Coded
967	0.000	09/01/14	Tue	1545	Left-Turn	0	0	1	Day	Dry	Not Coded
968	0.000	09/01/14	Tue	1040	Rear-End	0	0	1	Day	Dry	Not Coded
969	0.000	09/02/14	Wed	2010	Rear-End	0	0	1	Night	Wet	Not Coded
970	0.000	09/02/14	Wed	0825	Sideswipe	0	0	1	Day	Dry	Not Coded
971	0.000	09/02/14	Wed	1535	Rear-End	0	0	1	Day	Dry	Not Coded
972	0.000	09/02/14	Wed	1345	Rear-End	0	0	1	Day	Dry	Not Coded
973	0.000	09/02/14	Wed	1815	Rear-End	0	0	1	Day	Dry	Not Coded
974	0.000	09/02/14	Wed	0801	Rear-End	0	1	0	Day	Dry	Not Coded
975	0.000	09/03/14	Thu	1718	Sideswipe	0	0	1	Day	Dry	Not Coded
976	0.000	09/03/14	Thu	2025	Rear-End	0	0	1	Night	Dry	Not Coded
977	0.000	09/03/14	Thu	2025	Rear-End	0	0	1	Night	Dry	Not Coded
978	0.000	09/03/14	Thu	1420	Angle	0	0	1	Day	Dry	Not Coded

State of Florida Department of Transportation
CRASH SUMMARY

SECTION: Ludlam Trail Corridor f — STATE ROUTE: #N/A
ROADWAY LIMITS: 0 — M.P. 0.000 TO 0.000 — ENGINEER: 0
STUDY PERIOD: FROM 1/ 2014 TO 12/ 2014 — COUNTY: Miami-Dade

No.	MILE POST	DATE	DAY	TIME	CRASH TYPE	FATAL	INJURIES	PROP DAM	DAY / NIGHT	WET / DRY	CONTRIBUTING CAUSE (VEHICLE ONLY)
979	0.000	09/03/14	Thu	1745	Left-Turn	0	1	0	Day	Dry	Not Coded
980	0.000	09/03/14	Thu	0840	Pedestrian	0	0	1	Day	Dry	Not Coded
981	0.000	09/03/14	Thu	2212	Sideswipe	0	0	1	Night	Dry	Not Coded
982	0.000	09/03/14	Thu	1533	Rear-End	0	0	1	Day	Dry	Not Coded
983	0.000	09/03/14	Thu	0640	Rear-End	0	1	0	Day	Dry	Not Coded
984	0.000	09/03/14	Thu	0836	Other Post, Pole Or Support	0	0	1	Day	Wet	Not Coded
985	0.000	09/03/14	Thu	1800	Parked Motor Vehicle	0	0	1	Day	Dry	Not Coded
986	0.000	09/04/14	Fri	0815	Angle	0	0	1	Day	Dry	Not Coded
987	0.000	09/04/14	Fri	1335	Left-Turn	0	0	1	Day	Dry	Not Coded
988	0.000	09/04/14	Fri	2145	Sideswipe	0	0	1	Night	Dry	Not Coded
989	0.000	09/04/14	Fri	1525	Rear-End	0	0	1	Day	Dry	Not Coded
990	0.000	09/04/14	Fri	1204	Rear-End	0	1	0	Day	Dry	Not Coded
991	0.000	09/04/14	Fri	1910	Left-Turn	0	0	1	Day	Dry	Not Coded
992	0.000	09/05/14	Sat	1604	Sideswipe	0	0	1	Day	Dry	Not Coded
993	0.000	09/05/14	Sat	1745	Sideswipe	0	0	1	Day	Dry	Not Coded
994	0.000	09/06/14	Sun	1243	Pedalcycle	0	0	1	Day	Dry	Not Coded
995	0.000	09/06/14	Sun	1621	Angle	0	0	1	Day	Dry	Not Coded
996	0.000	09/06/14	Sun	1609	Sideswipe	0	0	1	Day	Dry	Not Coded
997	0.000	09/06/14	Sun	1606	Rear-End	0	0	1	Day	Dry	Not Coded
998	0.000	09/07/14	Mon	2000	Angle	0	0	1	Night	Dry	Not Coded
999	0.000	09/07/14	Mon	1905	Rear-End	0	0	1	Day	Dry	Not Coded
1000	0.000	09/07/14	Mon	0031	Left-Turn	0	0	1	Night	Wet	Not Coded
1001	0.000	09/07/14	Mon	2047	Angle	0	0	1	Night	Dry	Not Coded
1002	0.000	09/08/14	Tue	0610	Left-Turn	0	1	0	Day	Dry	Not Coded
1003	0.000	09/08/14	Tue	1848	Rear-End	0	0	1	Day	Dry	Not Coded
1004	0.000	09/08/14	Tue	1755	Rear-End	0	1	0	Day	Dry	Not Coded
1005	0.000	09/08/14	Tue	1835	Rear-End	0	0	1	Day	Dry	Not Coded
1006	0.000	09/08/14	Tue	1745	Angle	0	0	1	Day	Dry	Not Coded
1007	0.000	09/08/14	Tue	1528	Head-On	0	1	0	Day	Dry	Not Coded
1008	0.000	09/08/14	Tue	2130	Not Coded	0	0	1	Night	Dry	Not Coded
1009	0.000	09/08/14	Tue	1638	Angle	0	0	1	Day	Dry	Not Coded
1010	0.000	09/09/14	Wed	1510	Sideswipe	0	0	1	Day	Dry	Not Coded
1011	0.000	09/09/14	Wed	1010	Rear-End	0	0	1	Day	Dry	Not Coded
1012	0.000	09/09/14	Wed	0821	Rear-End	0	0	1	Day	Dry	Not Coded
1013	0.000	09/09/14	Wed	1655	Rear-End	0	0	1	Day	Dry	Not Coded
1014	0.000	09/10/14	Thu	1426	Rear-End	0	0	1	Day	Dry	Not Coded
1015	0.000	09/10/14	Thu	1848	Left-Turn	0	0	1	Day	Dry	Not Coded
1016	0.000	09/10/14	Thu	1740	Rear-End	0	0	1	Day	Dry	Not Coded
1017	0.000	09/10/14	Thu	1745	Angle	0	1	0	Day	Dry	Not Coded
1018	0.000	09/10/14	Thu	1525	Rear-End	0	0	1	Day	Dry	Not Coded
1019	0.000	09/10/14	Thu	1506	Angle	0	0	1	Day	Dry	Not Coded
1020	0.000	09/10/14	Thu	1510	Rear-End	0	0	1	Day	Dry	Not Coded
1021	0.000	09/10/14	Thu	1730	Left-Turn	0	0	1	Day	Dry	Not Coded
1022	0.000	09/11/14	Fri	0705	Rear-End	0	0	1	Day	Dry	Not Coded
1023	0.000	09/11/14	Fri	0855	Rear-End	0	0	1	Day	Dry	Not Coded
1024	0.000	09/11/14	Fri	2210	Rear-End	0	0	1	Night	Wet	Not Coded
1025	0.000	09/12/14	Sat	1400	Rear-End	0	0	1	Day	Dry	Not Coded
1026	0.000	09/12/14	Sat	1415	Rear-End	0	0	1	Day	Dry	Not Coded
1027	0.000	09/12/14	Sat	1110	Backed Into	0	1	0	Day	Dry	Not Coded
1028	0.000	09/12/14	Sat	0639	Right-Turn	0	0	1	Night	Wet	Not Coded
1029	0.000	09/12/14	Sat	0650	Backed Into	0	0	1	Day	Wet	Not Coded
1030	0.000	09/12/14	Sat	1334	Angle	0	1	0	Day	Dry	Not Coded
1031	0.000	09/12/14	Sat	1956	Rear-End	0	0	1	Night	Dry	Not Coded
1032	0.000	09/13/14	Sun	1902	Rear-End	0	0	1	Night	Dry	Not Coded
1033	0.000	09/13/14	Sun	1436	Sideswipe	0	1	0	Day	Dry	Not Coded
1034	0.000	09/13/14	Sun	1505	Angle	0	0	1	Day	Dry	Not Coded
1035	0.000	09/14/14	Mon	1636	Rear-End	0	0	1	Day	Dry	Not Coded
1036	0.000	09/15/14	Tue	1317	Sideswipe	0	1	0	Day	Dry	Not Coded
1037	0.000	09/15/14	Tue	1955	Left-Turn	0	0	1	Night	Dry	Not Coded
1038	0.000	09/15/14	Tue	0851	Rear-End	0	0	1	Day	Dry	Not Coded
1039	0.000	09/15/14	Tue	0850	Rear-End	0	0	1	Day	Dry	Not Coded
1040	0.000	09/15/14	Tue	0618	Rear-End	0	0	1	Night	Dry	Not Coded
1041	0.000	09/15/14	Tue	0744	Rear-End	0	0	1	Day	Dry	Not Coded
1042	0.000	09/16/14	Wed	1711	Rear-End	0	0	1	Day	Dry	Not Coded
1043	0.000	09/16/14	Wed	1135	Angle	0	1	0	Day	Dry	Not Coded
1044	0.000	09/16/14	Wed	0825	Rear-End	0	0	1	Day	Dry	Not Coded
1045	0.000	09/16/14	Wed	1945	Right-Turn	0	0	1	Night	Wet	Not Coded
1046	0.000	09/17/14	Thu	1035	Rear-End	0	1	0	Day	Dry	Not Coded
1047	0.000	09/17/14	Thu	1522	Rear-End	0	1	0	Day	Dry	Not Coded

State of Florida Department of Transportation
CRASH SUMMARY

SECTION: Ludlam Trail Corridor f — STATE ROUTE: #N/A
ROADWAY LIMITS: 0 — M.P. 0.000 TO 0.000 — ENGINEER: 0
STUDY PERIOD: FROM 1/ 2014 TO 12/ 2014 — COUNTY: Miami-Dade

No.	MILE POST	DATE	DAY	TIME	CRASH TYPE	FATAL	INJURIES	PROP DAM	DAY / NIGHT	WET / DRY	CONTRIBUTING CAUSE (VEHICLE ONLY)
1048	0.000	09/17/14	Thu	1452	Rear-End	0	1	0	Day	Dry	Not Coded
1049	0.000	09/17/14	Thu	2310	Rear-End	0	0	1	Night	Dry	Not Coded
1050	0.000	09/17/14	Thu	1710	Rear-End	0	0	1	Day	Wet	Not Coded
1051	0.000	09/18/14	Fri	1715	Rear-End	0	0	1	Day	Dry	Not Coded
1052	0.000	09/18/14	Fri	0935	Parked Motor Vehicle	0	0	1	Day	Dry	Not Coded
1053	0.000	09/18/14	Fri	0725	Sideswipe	0	0	1	Day	Dry	Not Coded
1054	0.000	09/18/14	Fri	0715	Pedestrian	0	0	1	Day	Dry	Not Coded
1055	0.000	09/19/14	Sat	1622	Left-Turn	0	0	1	Day	Dry	Not Coded
1056	0.000	09/19/14	Sat	1216	Rear-End	0	0	1	Day	Wet	Not Coded
1057	0.000	09/19/14	Sat	1325	Backed Into	0	0	1	Day	Wet	Not Coded
1058	0.000	09/19/14	Sat	1335	Angle	0	0	1	Day	Wet	Not Coded
1059	0.000	09/19/14	Sat	1147	Rear-End	0	0	1	Day	Dry	Not Coded
1060	0.000	09/19/14	Sat	0824	Angle	0	0	1	Day	Dry	Not Coded
1061	0.000	09/20/14	Sun	1523	Angle	0	0	1	Day	Wet	Not Coded
1062	0.000	09/20/14	Sun	1312	Head-On	0	0	1	Day	Dry	Not Coded
1063	0.000	09/20/14	Sun	1215	Left-Turn	0	0	1	Day	Dry	Not Coded
1064	0.000	09/20/14	Sun	1045	Sideswipe	0	0	1	Day	Dry	Not Coded
1065	0.000	09/21/14	Mon	1410	Left-Turn	0	0	1	Day	Dry	Not Coded
1066	0.000	09/21/14	Mon	1423	Rear-End	0	0	1	Day	Dry	Not Coded
1067	0.000	09/22/14	Tue	1127	Rear-End	0	0	1	Day	Dry	Not Coded
1068	0.000	09/22/14	Tue	1830	Sideswipe	0	0	1	Day	Dry	Not Coded
1069	0.000	09/22/14	Tue	1610	Angle	0	0	1	Day	Dry	Not Coded
1070	0.000	09/22/14	Tue	0922	Rear-End	0	0	1	Day	Dry	Not Coded
1071	0.000	09/22/14	Tue	1323	Rear-End	0	0	1	Day	Dry	Not Coded
1072	0.000	09/23/14	Wed	1145	Left-Turn	0	0	1	Day	Dry	Not Coded
1073	0.000	09/23/14	Wed	1840	Angle	0	0	1	Day	Dry	Not Coded
1074	0.000	09/23/14	Wed	1430	Left-Turn	0	0	1	Day	Wet	Not Coded
1075	0.000	09/23/14	Wed	1838	Sideswipe	0	0	1	Day	Dry	Not Coded
1076	0.000	09/23/14	Wed	1455	Rear-End	0	0	1	Day	Wet	Not Coded
1077	0.000	09/23/14	Wed	1623	Backed Into	0	1	0	Day	Dry	Not Coded
1078	0.000	09/24/14	Thu	0815	Angle	0	0	1	Day	Wet	Not Coded
1079	0.000	09/24/14	Thu	1735	Angle	0	0	1	Day	Dry	Not Coded
1080	0.000	09/24/14	Thu	1730	Left-Turn	0	0	1	Day	Dry	Not Coded
1081	0.000	09/24/14	Thu	1725	Rear-End	0	0	1	Day	Dry	Not Coded
1082	0.000	09/24/14	Thu	1640	Left-Turn	0	0	1	Day	Dry	Not Coded
1083	0.000	09/24/14	Thu	1718	Angle	0	0	1	Day	Dry	Not Coded
1084	0.000	09/25/14	Fri	1730	Rear-End	0	0	1	Day	Wet	Not Coded
1085	0.000	09/25/14	Fri	0918	Rear-End	0	0	1	Day	Dry	Not Coded
1086	0.000	09/25/14	Fri	0920	Left-Turn	0	0	1	Day	Dry	Not Coded
1087	0.000	09/26/14	Sat	2340	Rear-End	0	1	0	Night	Wet	Not Coded
1088	0.000	09/26/14	Sat	2039	Rear-End	0	0	1	Night	Dry	Not Coded
1089	0.000	09/26/14	Sat	1515	Rear-End	0	0	1	Day	Dry	Not Coded
1090	0.000	09/27/14	Sun	1241	Rear-End	0	1	0	Day	Dry	Not Coded
1091	0.000	09/28/14	Mon	1138	Animal	0	0	1	Day	Dry	Not Coded
1092	0.000	09/28/14	Mon	1445	Angle	0	0	1	Day	Dry	Not Coded
1093	0.000	09/28/14	Mon	0100	Rear-End	0	0	1	Day	Dry	Not Coded
1094	0.000	09/29/14	Tue	0730	Rear-End	0	0	1	Night	Dry	Not Coded
1095	0.000	09/29/14	Tue	1700	Angle	0	0	1	Night	Dry	Not Coded
1096	0.000	09/29/14	Tue	1545	Rear-End	0	0	1	Day	Dry	Not Coded
1097	0.000	09/29/14	Tue	1556	Angle	0	0	1	Day	Dry	Not Coded
1098	0.000	09/29/14	Tue	0817	Rear-End	0	0	1	Day	Dry	Not Coded
1099	0.000	09/30/14	Wed	2040	Rear-End	0	0	1	Night	Dry	Not Coded
1100	0.000	09/30/14	Wed	1734	Parked Motor Vehicle	0	0	1	Day	Dry	Not Coded
1101	0.000	09/30/14	Wed	1704	Rear-End	0	0	1	Day	Dry	Not Coded
1102	0.000	09/30/14	Wed	2237	Rear-End	0	0	1	Night	Dry	Not Coded
1103	0.000	09/30/14	Wed	1002	Sideswipe	0	0	1	Day	Dry	Not Coded
1104	0.000	10/01/14	Thu	1843	Backed Into	0	0	1	Day	Dry	Not Coded
1105	0.000	10/01/14	Thu	1831	Left-Turn	0	1	0	Day	Dry	Not Coded
1106	0.000	10/01/14	Thu	0715	Angle	0	0	1	Day	Dry	Not Coded
1107	0.000	10/01/14	Thu	1807	Rear-End	0	0	1	Day	Dry	Not Coded
1108	0.000	10/01/14	Thu	1950	Sideswipe	0	0	1	Night	Dry	Not Coded
1109	0.000	10/02/14	Fri	1829	Rear-End	0	0	1	Day	Dry	Not Coded
1110	0.000	10/02/14	Fri	1734	Rear-End	0	0	1	Day	Dry	Not Coded
1111	0.000	10/02/14	Fri	0830	Rear-End	0	1	0	Day	Dry	Not Coded
1112	0.000	10/02/14	Fri	1430	Sideswipe	0	0	1	Day	Dry	Not Coded
1113	0.000	10/02/14	Fri	1550	Rear-End	0	0	1	Day	Dry	Not Coded
1114	0.000	10/02/14	Fri	1100	Rear-End	0	0	1	Day	Dry	Not Coded
1115	0.000	10/02/14	Fri	0915	Rear-End	0	0	1	Day	Dry	Not Coded
1116	0.000	10/02/14	Fri	0900	Rear-End	0	0	1	Day	Dry	Not Coded

State of Florida Department of Transportation
CRASH SUMMARY

SECTION: Ludlam Trail Corridor f — STATE ROUTE: #N/A
ROADWAY LIMITS: 0 — M.P. 0.000 TO 0.000 — ENGINEER: 0
STUDY PERIOD: FROM 1/ 2014 TO 12/ 2014 — COUNTY: Miami-Dade

No.	MILE POST	DATE	DAY	TIME	CRASH TYPE	FATAL	INJURIES	PROP DAM	DAY / NIGHT	WET / DRY	CONTRIBUTING CAUSE (VEHICLE ONLY)
1117	0.000	10/02/14	Fri	1730	Rear-End	0	1	0	Day	Wet	Not Coded
1118	0.000	10/03/14	Sat	1936	Left-Turn	0	1	0	Night	Wet	Not Coded
1119	0.000	10/03/14	Sat	2045	Angle	0	0	1	Night	Dry	Not Coded
1120	0.000	10/03/14	Sat	0945	Sideswipe	0	1	0	Day	Dry	Not Coded
1121	0.000	10/03/14	Sat	0815	Rear-End	0	0	1	Day	Dry	Not Coded
1122	0.000	10/03/14	Sat	0750	Rear-End	0	0	1	Day	Dry	Not Coded
1123	0.000	10/03/14	Sat	1248	Left-Turn	0	1	0	Day	Dry	Not Coded
1124	0.000	10/03/14	Sat	0925	Angle	0	0	1	Day	Dry	Not Coded
1125	0.000	10/03/14	Sat	0905	Angle	0	0	1	Day	Dry	Not Coded
1126	0.000	10/04/14	Sun	0100	Sideswipe	0	0	1	Night	Dry	Not Coded
1127	0.000	10/04/14	Sun	1618	Rear-End	0	0	1	Day	Dry	Not Coded
1128	0.000	10/04/14	Sun	0729	Left-Turn	0	0	1	Night	Dry	Not Coded
1129	0.000	10/04/14	Sun	1120	Angle	0	0	1	Day	Dry	Not Coded
1130	0.000	10/05/14	Mon	2250	Angle	0	0	1	Night	Wet	Not Coded
1131	0.000	10/05/14	Mon	1141	Rear-End	0	0	1	Day	Dry	Not Coded
1132	0.000	10/06/14	Tue	1230	Backed Into	0	0	1	Day	Dry	Not Coded
1133	0.000	10/06/14	Tue	0827	Rear-End	0	1	0	Day	Dry	Not Coded
1134	0.000	10/06/14	Tue	0833	Right-Turn	0	1	0	Day	Dry	Not Coded
1135	0.000	10/06/14	Tue	1930	Angle	0	0	1	Night	Dry	Not Coded
1136	0.000	10/06/14	Tue	1340	Rear-End	0	0	1	Day	Dry	Not Coded
1137	0.000	10/07/14	Wed	1533	Left-Turn	0	0	1	Day	Dry	Not Coded
1138	0.000	10/07/14	Wed	0825	Right-Turn	0	0	1	Day	Dry	Not Coded
1139	0.000	10/07/14	Wed	1338	Backed Into	0	0	1	Day	Dry	Not Coded
1140	0.000	10/07/14	Wed	1423	Rear-End	0	1	0	Day	Dry	Not Coded
1141	0.000	10/07/14	Wed	1750	Rear-End	0	0	1	Day	Dry	Not Coded
1142	0.000	10/07/14	Wed	1225	Rear-End	0	0	1	Day	Wet	Not Coded
1143	0.000	10/07/14	Wed	1457	Left-Turn	0	0	1	Day	Dry	Not Coded
1144	0.000	10/08/14	Thu	0700	Angle	0	0	1	Day	Dry	Not Coded
1145	0.000	10/08/14	Thu	1800	Sideswipe	0	0	1	Night	Dry	Not Coded
1146	0.000	10/08/14	Thu	1615	Head-On	0	0	1	Day	Dry	Not Coded
1147	0.000	10/09/14	Fri	1510	Angle	0	1	0	Day	Dry	Not Coded
1148	0.000	10/09/14	Fri	2036	Rear-End	0	0	1	Night	Dry	Not Coded
1149	0.000	10/09/14	Fri	1300	Rear-End	0	0	1	Day	Dry	Not Coded
1150	0.000	10/09/14	Fri	1352	Sideswipe	0	0	1	Day	Dry	Not Coded
1151	0.000	10/09/14	Fri	1600	Angle	0	0	1	Day	Dry	Not Coded
1152	0.000	10/10/14	Sat	1721	Rear-End	0	0	1	Day	Dry	Not Coded
1153	0.000	10/10/14	Sat	1300	Left-Turn	0	0	1	Day	Dry	Not Coded
1154	0.000	10/11/14	Sun	1137	Rear-End	0	0	1	Day	Dry	Not Coded
1155	0.000	10/11/14	Sun	1340	Other Post, Pole Or Support	0	0	1	Day	Dry	Not Coded
1156	0.000	10/12/14	Mon	1956	Rear-End	0	0	1	Night	Dry	Not Coded
1157	0.000	10/12/14	Mon	2004	Sideswipe	0	0	1	Night	Wet	Not Coded
1158	0.000	10/13/14	Tue	0935	Angle	0	0	1	Day	Wet	Not Coded
1159	0.000	10/13/14	Tue	0807	Left-Turn	0	0	1	Day	Dry	Not Coded
1160	0.000	10/14/14	Wed	1347	Head-On	0	0	1	Day	Dry	Not Coded
1161	0.000	10/14/14	Wed	1530	Pedestrian	0	0	1	Day	Dry	Not Coded
1162	0.000	10/14/14	Wed	1458	Angle	0	0	1	Day	Dry	Not Coded
1163	0.000	10/14/14	Wed	1848	Angle	0	0	1	Day	Dry	Not Coded
1164	0.000	10/14/14	Wed	1538	Rear-End	0	0	1	Day	Dry	Not Coded
1165	0.000	10/14/14	Wed	1606	Sideswipe	0	0	1	Day	Dry	Not Coded
1166	0.000	10/15/14	Thu	2159	Angle	0	0	1	Night	Dry	Not Coded
1167	0.000	10/15/14	Thu	1807	Rear-End	0	0	1	Day	Wet	Not Coded
1168	0.000	10/15/14	Thu	1806	Rear-End	0	0	1	Day	Wet	Not Coded
1169	0.000	10/15/14	Thu	1658	Left-Turn	0	0	1	Day	Wet	Not Coded
1170	0.000	10/16/14	Fri	1433	Rear-End	0	0	1	Day	Dry	Not Coded
1171	0.000	10/16/14	Fri	1645	Angle	0	0	1	Day	Dry	Not Coded
1172	0.000	10/16/14	Fri	0837	Angle	0	0	1	Day	Dry	Not Coded
1173	0.000	10/16/14	Fri	1236	Rear-End	0	1	0	Day	Dry	Not Coded
1174	0.000	10/16/14	Fri	1940	Left-Turn	0	0	1	Night	Dry	Not Coded
1175	0.000	10/16/14	Fri	1630	Sideswipe	0	0	1	Day	Dry	Not Coded
1176	0.000	10/16/14	Fri	1200	Rear-End	0	0	1	Day	Dry	Not Coded
1177	0.000	10/16/14	Fri	0835	Rear-End	0	0	1	Day	Dry	Not Coded
1178	0.000	10/16/14	Fri	1620	Rear-End	0	0	1	Day	Dry	Not Coded
1179	0.000	10/16/14	Fri	1540	Rear-End	0	0	1	Day	Dry	Not Coded
1180	0.000	10/17/14	Sat	1550	Angle	0	0	1	Day	Dry	Not Coded
1181	0.000	10/17/14	Sat	1633	Angle	0	0	1	Day	Dry	Not Coded
1182	0.000	10/17/14	Sat	1241	Rear-End	0	0	1	Day	Dry	Not Coded
1183	0.000	10/17/14	Sat	1215	Right-Turn	0	0	1	Day	Dry	Not Coded
1184	0.000	10/17/14	Sat	1830	Rear-End	0	1	0	Day	Dry	Not Coded
1185	0.000	10/18/14	Sun	1356	Left-Turn	0	0	1	Day	Dry	Not Coded

State of Florida Department of Transportation
CRASH SUMMARY

SECTION: Ludlam Trail Corridor f | STATE ROUTE: #N/A
ROADWAY LIMITS: 0 | M.P. 0.000 TO 0.000 | ENGINEER: 0
STUDY PERIOD: FROM 1/ 2014 TO 12/ 2014 | COUNTY: Miami-Dade

No.	MILE POST	DATE	DAY	TIME	CRASH TYPE	FATAL	INJURIES	PROP DAM	DAY / NIGHT	WET / DRY	CONTRIBUTING CAUSE (VEHICLE ONLY)
1186	0.000	10/18/14	Sun	0045	Left-Turn	0	0	1	Night	Dry	Not Coded
1187	0.000	10/19/14	Mon	2346	Left-Turn	0	1	0	Night	Dry	Not Coded
1188	0.000	10/19/14	Mon	2216	Rear-End	0	0	1	Night	Dry	Not Coded
1189	0.000	10/19/14	Mon	1349	Angle	0	0	1	Day	Dry	Not Coded
1190	0.000	10/20/14	Tue	0825	Rear-End	0	0	1	Day	Dry	Not Coded
1191	0.000	10/20/14	Tue	1724	Rear-End	0	0	1	Day	Wet	Not Coded
1192	0.000	10/21/14	Wed	1457	Rear-End	0	0	1	Day	Wet	Not Coded
1193	0.000	10/21/14	Wed	1018	Rear-End	0	0	1	Day	Dry	Not Coded
1194	0.000	10/21/14	Wed	0845	Left-Turn	0	0	1	Day	Dry	Not Coded
1195	0.000	10/21/14	Wed	1932	Sideswipe	0	1	0	Night	Dry	Not Coded
1196	0.000	10/21/14	Wed	1415	Angle	0	0	1	Day	Wet	Not Coded
1197	0.000	10/21/14	Wed	0750	Backed Into	0	0	1	Day	Dry	Not Coded
1198	0.000	10/21/14	Wed	1010	Left-Turn	0	0	1	Day	Dry	Not Coded
1199	0.000	10/21/14	Wed	0843	Rear-End	0	0	1	Day	Dry	Not Coded
1200	0.000	10/22/14	Thu	1815	Left-Turn	0	0	1	Night	Dry	Not Coded
1201	0.000	10/22/14	Thu	1821	Angle	0	1	0	Night	Wet	Not Coded
1202	0.000	10/22/14	Thu	0711	Left-Turn	0	0	1	Day	Dry	Not Coded
1203	0.000	10/22/14	Thu	1335	Rear-End	0	1	0	Day	Dry	Not Coded
1204	0.000	10/22/14	Thu	1840	Left-Turn	0	0	1	Night	Wet	Not Coded
1205	0.000	10/22/14	Thu	1650	Parked Motor Vehicle	0	0	1	Day	Wet	Not Coded
1206	0.000	10/22/14	Thu	1355	Backed Into	0	0	1	Day	Dry	Not Coded
1207	0.000	10/22/14	Thu	0630	Rear-End	0	1	0	Night	Dry	Not Coded
1208	0.000	10/22/14	Thu	1010	Left-Turn	1	0	0	Day	Dry	Not Coded
1209	0.000	10/23/14	Fri	0845	Left-Turn	0	0	1	Day	Wet	Not Coded
1210	0.000	10/23/14	Fri	0800	Rear-End	0	0	1	Day	Wet	Not Coded
1211	0.000	10/23/14	Fri	1954	Left-Turn	0	0	1	Night	Dry	Not Coded
1212	0.000	10/23/14	Fri	1025	Rear-End	0	0	1	Day	Wet	Not Coded
1213	0.000	10/23/14	Fri	1018	Angle	0	0	1	Day	Wet	Not Coded
1214	0.000	10/23/14	Fri	1615	Rear-End	0	0	1	Day	Dry	Not Coded
1215	0.000	10/24/14	Sat	1417	Not Coded	0	0	1	Day	Wet	Not Coded
1216	0.000	10/24/14	Sat	1725	Rear-End	0	1	0	Day	Wet	Not Coded
1217	0.000	10/24/14	Sat	1940	Not Coded	0	0	1	Night	Wet	Not Coded
1218	0.000	10/24/14	Sat	1138	Not Coded	0	0	1	Day	Wet	Not Coded
1219	0.000	10/24/14	Sat	1438	Rear-End	0	0	1	Day	Wet	Not Coded
1220	0.000	10/24/14	Sat	2056	Angle	0	0	1	Night	Dry	Not Coded
1221	0.000	10/24/14	Sat	2000	Sideswipe	0	0	1	Night	Dry	Not Coded
1222	0.000	10/25/14	Sun	1622	Rear-End	0	1	0	Day	Dry	Not Coded
1223	0.000	10/25/14	Sun	1140	Sideswipe	0	0	1	Day	Dry	Not Coded
1224	0.000	10/25/14	Sun	0338	Rear-End	0	0	1	Night	Dry	Not Coded
1225	0.000	10/26/14	Mon	2230	Left-Turn	0	0	1	Day	Dry	Not Coded
1226	0.000	10/26/14	Mon	1910	Rear-End	0	0	1	Night	Dry	Not Coded
1227	0.000	10/27/14	Tue	1445	Rear-End	0	0	1	Day	Dry	Not Coded
1228	0.000	10/27/14	Tue	1830	Sideswipe	0	0	1	Day	Dry	Not Coded
1229	0.000	10/27/14	Tue	1820	Rear-End	0	0	1	Day	Dry	Not Coded
1230	0.000	10/27/14	Tue	0910	Rear-End	0	0	1	Day	Dry	Not Coded
1231	0.000	10/27/14	Tue	1338	Rear-End	0	0	1	Day	Dry	Not Coded
1232	0.000	10/27/14	Tue	1730	Rear-End	0	0	1	Day	Dry	Not Coded
1233	0.000	10/28/14	Wed	1828	Not Coded	0	0	1	Night	Dry	Not Coded
1234	0.000	10/28/14	Wed	1413	Angle	0	0	1	Day	Dry	Not Coded
1235	0.000	10/28/14	Wed	0900	Sideswipe	0	0	1	Day	Dry	Not Coded
1236	0.000	10/28/14	Wed	2151	Sideswipe	0	0	1	Night	Dry	Not Coded
1237	0.000	10/28/14	Wed	1822	Rear-End	0	1	0	Night	Dry	Not Coded
1238	0.000	10/28/14	Wed	2115	Angle	0	0	1	Night	Dry	Not Coded
1239	0.000	10/28/14	Wed	1205	Backed Into	0	0	1	Day	Dry	Not Coded
1240	0.000	10/28/14	Wed	1300	Sideswipe	0	0	1	Day	Dry	Not Coded
1241	0.000	10/28/14	Wed	1805	Rear-End	0	1	0	Day	Dry	Not Coded
1242	0.000	10/29/14	Thu	0934	Left-Turn	0	0	1	Day	Dry	Not Coded
1243	0.000	10/29/14	Thu	0704	Rear-End	0	0	1	Night	Dry	Not Coded
1244	0.000	10/29/14	Thu	1530	Rear-End	0	0	1	Day	Dry	Not Coded
1245	0.000	10/29/14	Thu	0815	Sideswipe	0	0	1	Day	Dry	Not Coded
1246	0.000	10/30/14	Fri	1815	Left-Turn	0	1	0	Day	Dry	Not Coded
1247	0.000	10/30/14	Fri	1400	Rear-End	0	0	1	Day	Dry	Not Coded
1248	0.000	10/30/14	Fri	1435	Rear-End	0	1	0	Day	Dry	Not Coded
1249	0.000	10/30/14	Fri	1700	Curb	0	0	1	Day	Dry	Not Coded
1250	0.000	10/30/14	Fri	0749	Sideswipe	0	1	0	Day	Dry	Not Coded
1251	0.000	10/30/14	Fri	0900	Parked Motor Vehicle	0	0	1	Day	Dry	Not Coded
1252	0.000	10/30/14	Fri	1732	Rear-End	0	1	0	Day	Dry	Not Coded
1253	0.000	10/30/14	Fri	0730	Rear-End	0	0	1	Night	Dry	Not Coded
1254	0.000	10/30/14	Fri	0930	Rear-End	0	0	1	Day	Dry	Not Coded

State of Florida Department of Transportation
CRASH SUMMARY

SECTION: Ludlam Trail Corridor f — STATE ROUTE: #N/A
ROADWAY LIMITS: 0 — M.P. 0.000 TO 0.000 — ENGINEER: 0
STUDY PERIOD: FROM 1/ 2014 TO 12/ 2014 — COUNTY: Miami-Dade

No.	MILE POST	DATE	DAY	TIME	CRASH TYPE	FATAL	INJURIES	PROP DAM	DAY / NIGHT	WET / DRY	CONTRIBUTING CAUSE (VEHICLE ONLY)
1255	0.000	10/30/14	Fri	0854	Parked Motor Vehicle	0	1	0	Day	Dry	Not Coded
1256	0.000	10/31/14	Sat	0831	Left-Turn	0	0	1	Day	Dry	Not Coded
1257	0.000	10/31/14	Sat	1002	Angle	0	0	1	Day	Dry	Not Coded
1258	0.000	10/31/14	Sat	1703	Left-Turn	0	0	1	Day	Dry	Not Coded
1259	0.000	10/31/14	Sat	1220	Rear-End	0	0	1	Day	Dry	Not Coded
1260	0.000	10/31/14	Sat	1115	Right-Turn	0	0	1	Day	Dry	Not Coded
1261	0.000	11/01/14	Sun	0603	Sideswipe	0	0	1	Night	Dry	Not Coded
1262	0.000	11/01/14	Sun	1951	Left-Turn	0	0	1	Night	Dry	Not Coded
1263	0.000	11/01/14	Sun	2012	Rear-End	0	0	1	Night	Dry	Not Coded
1264	0.000	11/01/14	Sun	1350	Rear-End	0	0	1	Day	Dry	Not Coded
1265	0.000	11/01/14	Sun	1522	Left-Turn	0	0	1	Day	Dry	Not Coded
1266	0.000	11/02/14	Mon	0117	Left-Turn	0	0	1	Night	Dry	Not Coded
1267	0.000	11/02/14	Mon	1620	Rear-End	0	0	1	Day	Dry	Not Coded
1268	0.000	11/02/14	Mon	0607	Sideswipe	0	0	1	Day	Dry	Not Coded
1269	0.000	11/03/14	Tue	2120	Left-Turn	0	0	1	Night	Dry	Not Coded
1270	0.000	11/03/14	Tue	0254	Backed Into	0	0	1	Night	Dry	Not Coded
1271	0.000	11/03/14	Tue	1509	Angle	0	0	1	Day	Dry	Not Coded
1272	0.000	11/03/14	Tue	1645	Rear-End	0	0	1	Day	Dry	Not Coded
1273	0.000	11/03/14	Tue	0720	Sideswipe	0	0	1	Day	Dry	Not Coded
1274	0.000	11/03/14	Tue	2150	Rear-End	0	0	1	Night	Dry	Not Coded
1275	0.000	11/04/14	Wed	1407	Rear-End	0	0	1	Day	Dry	Not Coded
1276	0.000	11/04/14	Wed	1255	Not Coded	0	1	0	Day	Dry	Not Coded
1277	0.000	11/04/14	Wed	2138	Backed Into	0	0	1	Night	Dry	Not Coded
1278	0.000	11/05/14	Thu	0744	Rear-End	0	0	1	Day	Wet	Not Coded
1279	0.000	11/05/14	Thu	1713	Other Fixed Object	0	0	1	Night	Dry	Not Coded
1280	0.000	11/05/14	Thu	0740	Rear-End	0	0	1	Day	Dry	Not Coded
1281	0.000	11/05/14	Thu	1046	Rear-End	0	0	1	Day	Wet	Not Coded
1282	0.000	11/05/14	Thu	1805	Rear-End	0	0	1	Night	Dry	Not Coded
1283	0.000	11/05/14	Thu	1810	Rear-End	0	1	0	Night	Wet	Not Coded
1284	0.000	11/05/14	Thu	1424	Angle	0	0	1	Day	Dry	Not Coded
1285	0.000	11/05/14	Thu	1400	Sideswipe	0	0	1	Day	Wet	Not Coded
1286	0.000	11/05/14	Thu	1400	Left-Turn	0	0	1	Day	Wet	Not Coded
1287	0.000	11/05/14	Thu	1001	Rear-End	0	0	1	Day	Wet	Not Coded
1288	0.000	11/05/14	Thu	1015	Rear-End	0	0	1	Day	Dry	Not Coded
1289	0.000	11/05/14	Thu	1611	Rear-End	0	1	0	Day	Wet	Not Coded
1290	0.000	11/05/14	Thu	1609	Sideswipe	0	0	1	Day	Wet	Not Coded
1291	0.000	11/06/14	Fri	1400	Left-Turn	0	0	1	Day	Dry	Not Coded
1292	0.000	11/06/14	Fri	0619	Rear-End	0	0	1	Night	Dry	Not Coded
1293	0.000	11/06/14	Fri	1530	Rear-End	0	0	1	Day	Dry	Not Coded
1294	0.000	11/06/14	Fri	0800	Rear-End	0	0	1	Day	Dry	Not Coded
1295	0.000	11/07/14	Sat	1404	Rear-End	0	0	1	Day	Dry	Not Coded
1296	0.000	11/07/14	Sat	0840	Left-Turn	0	0	1	Day	Dry	Not Coded
1297	0.000	11/07/14	Sat	1040	Parked Motor Vehicle	0	0	1	Day	Dry	Not Coded
1298	0.000	11/08/14	Sun	1450	Rear-End	0	0	1	Day	Dry	Not Coded
1299	0.000	11/08/14	Sun	1840	Angle	0	0	1	Night	Dry	Not Coded
1300	0.000	11/08/14	Sun	1035	Angle	0	0	1	Day	Dry	Not Coded
1301	0.000	11/08/14	Sun	1900	Angle	0	0	1	Night	Dry	Not Coded
1302	0.000	11/09/14	Mon	2047	Rear-End	0	0	1	Night	Wet	Not Coded
1303	0.000	11/09/14	Mon	1614	Rear-End	0	0	1	Day	Wet	Not Coded
1304	0.000	11/09/14	Mon	0518	Sideswipe	0	0	1	Night	Dry	Not Coded
1305	0.000	11/10/14	Tue	1330	Angle	0	0	1	Day	Dry	Not Coded
1306	0.000	11/10/14	Tue	0725	Rear-End	0	0	1	Day	Wet	Not Coded
1307	0.000	11/10/14	Tue	1005	Rear-End	0	0	1	Day	Dry	Not Coded
1308	0.000	11/10/14	Tue	0815	Sideswipe	0	0	1	Day	Wet	Not Coded
1309	0.000	11/10/14	Tue	1737	Not Coded	0	0	1	Night	Dry	Not Coded
1310	0.000	11/10/14	Tue	1900	Other Non-Fixed Object	0	0	1	Night	Dry	Not Coded
1311	0.000	11/10/14	Tue	1138	Angle	0	0	1	Day	Dry	Not Coded
1312	0.000	11/10/14	Tue	0710	Sideswipe	0	0	1	Day	Wet	Not Coded
1313	0.000	11/11/14	Wed	1045	Sideswipe	0	0	1	Day	Dry	Not Coded
1314	0.000	11/11/14	Wed	0025	Right-Turn	0	0	1	Night	Dry	Not Coded
1315	0.000	11/11/14	Wed	1651	Rear-End	0	0	1	Day	Dry	Not Coded
1316	0.000	11/12/14	Thu	0816	Rear-End	0	0	1	Day	Dry	Not Coded
1317	0.000	11/12/14	Thu	1340	Parked Motor Vehicle	0	0	1	Day	Dry	Not Coded
1318	0.000	11/12/14	Thu	1140	Right-Turn	0	0	1	Day	Dry	Not Coded
1319	0.000	11/12/14	Thu	1523	Rear-End	0	0	1	Day	Dry	Not Coded
1320	0.000	11/12/14	Thu	1401	Sideswipe	0	0	1	Day	Dry	Not Coded
1321	0.000	11/12/14	Thu	0818	Rear-End	0	0	1	Day	Dry	Not Coded
1322	0.000	11/13/14	Fri	1430	Right-Turn	0	0	1	Day	Dry	Not Coded
1323	0.000	11/13/14	Fri	0900	Angle	0	0	1	Day	Dry	Not Coded

State of Florida Department of Transportation
CRASH SUMMARY

SECTION: Ludlam Trail Corridor f — STATE ROUTE: #N/A
ROADWAY LIMITS: 0 — M.P. 0.000 TO 0.000 — ENGINEER: 0
STUDY PERIOD: FROM 1/ 2014 TO 12/ 2014 — COUNTY: Miami-Dade

No.	MILE POST	DATE	DAY	TIME	CRASH TYPE	FATAL	INJURIES	PROP DAM	DAY / NIGHT	WET / DRY	CONTRIBUTING CAUSE (VEHICLE ONLY)
1324	0.000	11/13/14	Fri	1609	Rear-End	0	1	0	Day	Dry	Not Coded
1325	0.000	11/13/14	Fri	1710	Rear-End	0	0	1	Day	Dry	Not Coded
1326	0.000	11/13/14	Fri	1615	Backed Into	0	0	1	Day	Dry	Not Coded
1327	0.000	11/13/14	Fri	1028	Angle	0	0	1	Day	Dry	Not Coded
1328	0.000	11/13/14	Fri	1847	Rear-End	0	0	1	Night	Dry	Not Coded
1329	0.000	11/13/14	Fri	1005	Rear-End	0	0	1	Day	Dry	Not Coded
1330	0.000	11/13/14	Fri	1930	Rear-End	0	0	1	Night	Dry	Not Coded
1331	0.000	11/14/14	Sat	1330	Backed Into	0	0	1	Day	Dry	Not Coded
1332	0.000	11/14/14	Sat	1703	Rear-End	0	0	1	Day	Dry	Not Coded
1333	0.000	11/14/14	Sat	1545	Left-Turn	0	0	1	Day	Dry	Not Coded
1334	0.000	11/15/14	Sun	1532	Left-Turn	0	0	1	Day	Dry	Not Coded
1335	0.000	11/15/14	Sun	1715	Sideswipe	0	0	1	Night	Dry	Not Coded
1336	0.000	11/15/14	Sun	1640	Rear-End	0	0	1	Day	Dry	Not Coded
1337	0.000	11/15/14	Sun	1605	Left-Turn	0	0	1	Day	Dry	Not Coded
1338	0.000	11/15/14	Sun	0812	Angle	0	0	1	Day	Dry	Not Coded
1339	0.000	11/16/14	Mon	1237	Rear-End	0	0	1	Day	Dry	Not Coded
1340	0.000	11/16/14	Mon	1835	Rear-End	0	0	1	Night	Dry	Not Coded
1341	0.000	11/17/14	Tue	0043	Left-Turn	-1	1	1	Night	Wet	Not Coded
1342	0.000	11/17/14	Tue	1904	Left-Turn	0	0	1	Night	Dry	Not Coded
1343	0.000	11/17/14	Tue	0636	Rear-End	0	0	1	Night	Wet	Not Coded
1344	0.000	11/17/14	Tue	1515	Left-Turn	0	0	1	Day	Dry	Not Coded
1345	0.000	11/18/14	Wed	0630	Rear-End	0	0	1	Day	Dry	Not Coded
1346	0.000	11/18/14	Wed	1705	Right-Turn	0	0	1	Night	Dry	Not Coded
1347	0.000	11/18/14	Wed	1515	Angle	0	0	1	Day	Dry	Not Coded
1348	0.000	11/18/14	Wed	1545	Rear-End	0	0	1	Day	Dry	Not Coded
1349	0.000	11/18/14	Wed	1815	Rear-End	0	0	1	Night	Wet	Not Coded
1350	0.000	11/18/14	Wed	1220	Sideswipe	0	0	1	Day	Dry	Not Coded
1351	0.000	11/18/14	Wed	1322	Angle	0	0	1	Day	Dry	Not Coded
1352	0.000	11/19/14	Thu	1624	Angle	0	0	1	Day	Wet	Not Coded
1353	0.000	11/19/14	Thu	0632	Rear-End	0	0	1	Night	Wet	Not Coded
1354	0.000	11/19/14	Thu	1601	Parked Motor Vehicle	0	0	1	Day	Wet	Not Coded
1355	0.000	11/19/14	Thu	1502	Rear-End	0	0	1	Day	Wet	Not Coded
1356	0.000	11/19/14	Thu	0735	Tree (Standing)	0	0	1	Day	Wet	Not Coded
1357	0.000	11/19/14	Thu	1741	Angle	0	0	1	Night	Dry	Not Coded
1358	0.000	11/19/14	Thu	0824	Left-Turn	0	0	1	Day	Wet	Not Coded
1359	0.000	11/19/14	Thu	0822	Left-Turn	0	0	1	Day	Wet	Not Coded
1360	0.000	11/19/14	Thu	1900	Left-Turn	0	0	1	Night	Wet	Not Coded
1361	0.000	11/20/14	Fri	0440	Rear-End	0	0	1	Night	Dry	Not Coded
1362	0.000	11/20/14	Fri	2225	Rear-End	0	1	0	Night	Dry	Not Coded
1363	0.000	11/20/14	Fri	2318	Angle	0	1	0	Night	Dry	Not Coded
1364	0.000	11/21/14	Sat	1820	Rear-End	0	0	1	Night	Wet	Not Coded
1365	0.000	11/21/14	Sat	2029	Left-Turn	0	0	1	Night	Wet	Not Coded
1366	0.000	11/21/14	Sat	1247	Left-Turn	0	0	1	Day	Wet	Not Coded
1367	0.000	11/21/14	Sat	1130	Backed Into	0	0	1	Day	Wet	Not Coded
1368	0.000	11/21/14	Sat	1128	Rear-End	0	0	1	Day	Wet	Not Coded
1369	0.000	11/21/14	Sat	1947	Not Coded	0	0	1	Night	Dry	Not Coded
1370	0.000	11/21/14	Sat	0733	Backed Into	0	0	1	Day	Wet	Not Coded
1371	0.000	11/21/14	Sat	2000	Rear-End	0	0	1	Night	Wet	Not Coded
1372	0.000	11/21/14	Sat	1155	Rear-End	0	0	1	Day	Wet	Not Coded
1373	0.000	11/21/14	Sat	0830	Rear-End	0	0	1	Day	Wet	Not Coded
1374	0.000	11/22/14	Sun	1153	Angle	0	0	1	Day	Dry	Not Coded
1375	0.000	11/23/14	Mon	1852	Guardrail Face	0	0	1	Unknown	Dry	Not Coded
1376	0.000	11/23/14	Mon	1804	Rear-End	0	1	0	Night	Dry	Not Coded
1377	0.000	11/24/14	Tue	1815	Right-Turn	0	0	1	Night	Dry	Not Coded
1378	0.000	11/24/14	Tue	1210	Left-Turn	0	0	1	Day	Dry	Not Coded
1379	0.000	11/24/14	Tue	1130	Right-Turn	0	1	0	Day	Dry	Not Coded
1380	0.000	11/24/14	Tue	1145	Rear-End	0	0	1	Day	Dry	Not Coded
1381	0.000	11/24/14	Tue	1405	Left-Turn	0	1	0	Day	Dry	Not Coded
1382	0.000	11/24/14	Tue	0807	Sideswipe	0	0	1	Day	Dry	Not Coded
1383	0.000	11/24/14	Tue	0745	Angle	0	0	1	Day	Dry	Not Coded
1384	0.000	11/25/14	Wed	1800	Angle	0	0	1	Night	Dry	Not Coded
1385	0.000	11/25/14	Wed	1827	Left-Turn	0	0	1	Night	Dry	Not Coded
1386	0.000	11/25/14	Wed	0832	Sideswipe	0	0	1	Day	Dry	Not Coded
1387	0.000	11/25/14	Wed	0832	Parked Motor Vehicle	0	0	1	Day	Dry	Not Coded
1388	0.000	11/25/14	Wed	0600	Left-Turn	0	0	1	Night	Dry	Not Coded
1389	0.000	11/26/14	Thu	0750	Angle	0	0	1	Day	Dry	Not Coded
1390	0.000	11/26/14	Thu	0802	Rear-End	0	0	1	Day	Wet	Not Coded
1391	0.000	11/26/14	Thu	1243	Backed Into	0	0	1	Day	Dry	Not Coded
1392	0.000	11/26/14	Thu	1731	Rear-End	0	0	1	Night	Dry	Not Coded

State of Florida Department of Transportation
CRASH SUMMARY

SECTION: Ludlam Trail Corridor f — STATE ROUTE: #N/A
ROADWAY LIMITS: 0 — M.P. 0.000 TO 0.000 — ENGINEER: 0
STUDY PERIOD: FROM 1/ 2014 TO 12/ 2014 — COUNTY: Miami-Dade

No.	MILE POST	DATE	DAY	TIME	CRASH TYPE	FATAL	INJURIES	PROP DAM	DAY / NIGHT	WET / DRY	CONTRIBUTING CAUSE (VEHICLE ONLY)
1393	0.000	11/27/14	Fri	2155	Sideswipe	0	0	1	Night	Dry	Not Coded
1394	0.000	11/27/14	Fri	1910	Rear-End	0	0	1	Night	Dry	Not Coded
1395	0.000	11/28/14	Sat	0755	Rear-End	0	0	1	Day	Dry	Not Coded
1396	0.000	11/28/14	Sat	1140	Sideswipe	0	0	1	Day	Dry	Not Coded
1397	0.000	11/28/14	Sat	0530	Left-Turn	0	0	1	Night	Dry	Not Coded
1398	0.000	11/28/14	Sat	1955	Left-Turn	0	0	1	Night	Dry	Not Coded
1399	0.000	11/29/14	Sun	2025	Rear-End	0	0	1	Night	Dry	Not Coded
1400	0.000	11/30/14	Mon	1923	Backed Into	0	0	1	Night	Dry	Not Coded
1401	0.000	11/30/14	Mon	1535	Sideswipe	0	0	1	Night	Dry	Not Coded
1402	0.000	11/30/14	Mon	1056	Sideswipe	0	0	1	Day	Dry	Not Coded
1403	0.000	12/01/14	Tue	1910	Left-Turn	0	0	1	Night	Dry	Not Coded
1404	0.000	12/01/14	Tue	1245	Left-Turn	0	0	1	Day	Dry	Not Coded
1405	0.000	12/02/14	Wed	1710	Rear-End	0	0	1	Day	Dry	Not Coded
1406	0.000	12/02/14	Wed	0800	Rear-End	0	0	1	Day	Dry	Not Coded
1407	0.000	12/02/14	Wed	0755	Left-Turn	0	0	1	Day	Dry	Not Coded
1408	0.000	12/02/14	Wed	0950	Rear-End	0	0	1	Day	Dry	Not Coded
1409	0.000	12/03/14	Thu	0832	Parked Motor Vehicle	0	0	1	Day	Dry	Not Coded
1410	0.000	12/03/14	Thu	1825	Angle	0	0	1	Night	Dry	Not Coded
1411	0.000	12/03/14	Thu	1814	Angle	0	0	1	Night	Dry	Not Coded
1412	0.000	12/03/14	Thu	1850	Angle	0	0	1	Night	Dry	Not Coded
1413	0.000	12/03/14	Thu	0845	Not Coded	0	0	1	Day	Wet	Not Coded
1414	0.000	12/04/14	Fri	1800	Rear-End	0	1	0	Night	Wet	Not Coded
1415	0.000	12/04/14	Fri	0915	Angle	0	0	1	Day	Dry	Not Coded
1416	0.000	12/04/14	Fri	0730	Angle	0	0	1	Day	Dry	Not Coded
1417	0.000	12/04/14	Fri	1745	Rear-End	0	0	1	Day	Dry	Not Coded
1418	0.000	12/04/14	Fri	1400	Left-Turn	0	0	1	Day	Dry	Not Coded
1419	0.000	12/04/14	Fri	0840	Rear-End	0	1	0	Day	Dry	Not Coded
1420	0.000	12/04/14	Fri	1415	Left-Turn	0	1	0	Day	Dry	Not Coded
1421	0.000	12/04/14	Fri	2200	Sideswipe	0	0	1	Night	Wet	Not Coded
1422	0.000	12/04/14	Fri	1620	Left-Turn	0	0	1	Day	Dry	Not Coded
1423	0.000	12/04/14	Fri	2021	Angle	0	0	1	Night	Wet	Not Coded
1424	0.000	12/05/14	Sat	1736	Rear-End	0	0	1	Day	Dry	Not Coded
1425	0.000	12/05/14	Sat	1023	Left-Turn	0	1	0	Day	Wet	Not Coded
1426	0.000	12/05/14	Sat	1820	Angle	0	0	1	Night	Dry	Not Coded
1427	0.000	12/05/14	Sat	0721	Rear-End	0	1	0	Day	Wet	Not Coded
1428	0.000	12/05/14	Sat	0815	Sideswipe	0	0	1	Day	Dry	Not Coded
1429	0.000	12/05/14	Sat	1400	Sideswipe	0	0	1	Day	Dry	Not Coded
1430	0.000	12/05/14	Sat	1615	Rear-End	0	0	1	Day	Dry	Not Coded
1431	0.000	12/06/14	Sun	1900	Rear-End	0	0	1	Night	Dry	Not Coded
1432	0.000	12/06/14	Sun	1325	Left-Turn	0	0	1	Day	Dry	Not Coded
1433	0.000	12/06/14	Sun	1212	Left-Turn	0	0	1	Day	Dry	Not Coded
1434	0.000	12/06/14	Sun	1336	Rear-End	0	1	0	Day	Dry	Not Coded
1435	0.000	12/06/14	Sun	1320	Left-Turn	0	0	1	Day	Dry	Not Coded
1436	0.000	12/06/14	Sun	1009	Rear-End	0	0	1	Day	Dry	Not Coded
1437	0.000	12/07/14	Mon	1610	Sideswipe	0	0	1	Day	Dry	Not Coded
1438	0.000	12/07/14	Mon	1300	Left-Turn	0	1	0	Day	Dry	Not Coded
1439	0.000	12/07/14	Mon	1940	Left-Turn	0	0	1	Night	Dry	Not Coded
1440	0.000	12/08/14	Tue	2014	Rear-End	0	0	1	Night	Dry	Not Coded
1441	0.000	12/08/14	Tue	1210	Left-Turn	0	0	1	Day	Dry	Not Coded
1442	0.000	12/08/14	Tue	0840	Rear-End	0	1	0	Day	Dry	Not Coded
1443	0.000	12/08/14	Tue	2017	Left-Turn	0	0	1	Night	Dry	Not Coded
1444	0.000	12/08/14	Tue	1902	Rear-End	0	0	1	Night	Dry	Not Coded
1445	0.000	12/08/14	Tue	1656	Rear-End	0	0	1	Day	Dry	Not Coded
1446	0.000	12/08/14	Tue	1815	Sideswipe	0	1	0	Night	Dry	Not Coded
1447	0.000	12/08/14	Tue	0911	Sideswipe	0	0	1	Day	Dry	Not Coded
1448	0.000	12/08/14	Tue	1344	Rear-End	0	0	1	Day	Dry	Not Coded
1449	0.000	12/08/14	Tue	1710	Rear-End	0	1	0	Day	Dry	Not Coded
1450	0.000	12/09/14	Wed	1301	Utility Pole/Light Support	0	1	0	Day	Dry	Not Coded
1451	0.000	12/09/14	Wed	1633	Left-Turn	0	0	1	Night	Dry	Not Coded
1452	0.000	12/09/14	Wed	1320	Rear-End	0	0	1	Day	Dry	Not Coded
1453	0.000	12/09/14	Wed	0720	Angle	0	0	1	Day	Dry	Not Coded
1454	0.000	12/09/14	Wed	1830	Utility Pole/Light Support	0	0	1	Night	Dry	Not Coded
1455	0.000	12/10/14	Thu	1844	Rear-End	0	0	1	Night	Dry	Not Coded
1456	0.000	12/10/14	Thu	1035	Angle	0	0	1	Day	Dry	Not Coded
1457	0.000	12/10/14	Thu	0608	Rear-End	0	0	1	Day	Dry	Not Coded
1458	0.000	12/10/14	Thu	0705	Angle	0	0	1	Day	Dry	Not Coded
1459	0.000	12/10/14	Thu	0608	Rear-End	0	0	1	Day	Dry	Not Coded
1460	0.000	12/11/14	Fri	1020	Rear-End	0	0	1	Day	Dry	Not Coded
1461	0.000	12/11/14	Fri	0817	Rear-End	0	0	1	Day	Dry	Not Coded

State of Florida Department of Transportation
CRASH SUMMARY

SECTION: Ludlam Trail Corridor f — STATE ROUTE: #N/A
ROADWAY LIMITS: 0 — M.P. 0.000 TO 0.000 — ENGINEER: 0
STUDY PERIOD: FROM 1/ 2014 TO 12/ 2014 — COUNTY: Miami-Dade

No.	MILE POST	DATE	DAY	TIME	CRASH TYPE	FATAL	INJURIES	PROP DAM	DAY / NIGHT	WET / DRY	CONTRIBUTING CAUSE (VEHICLE ONLY)
1462	0.000	12/12/14	Sat	0838	Angle	0	0	1	Day	Dry	Not Coded
1463	0.000	12/12/14	Sat	1810	Left-Turn	0	0	1	Night	Dry	Not Coded
1464	0.000	12/12/14	Sat	1545	Right-Turn	0	0	1	Day	Dry	Not Coded
1465	0.000	12/13/14	Sun	1630	Left-Turn	0	0	1	Day	Dry	Not Coded
1466	0.000	12/13/14	Sun	1907	Right-Turn	0	0	1	Night	Dry	Not Coded
1467	0.000	12/13/14	Sun	1701	Rear-End	0	0	1	Day	Dry	Not Coded
1468	0.000	12/13/14	Sun	1420	Parked Motor Vehicle	0	0	1	Day	Dry	Not Coded
1469	0.000	12/14/14	Mon	1950	Parked Motor Vehicle	0	0	1	Night	Dry	Not Coded
1470	0.000	12/15/14	Tue	1525	Rear-End	0	0	1	Day	Dry	Not Coded
1471	0.000	12/15/14	Tue	1655	Rear-End	0	0	1	Day	Dry	Not Coded
1472	0.000	12/15/14	Tue	0036	Angle	0	0	1	Night	Dry	Not Coded
1473	0.000	12/15/14	Tue	1209	Left-Turn	0	0	1	Night	Dry	Not Coded
1474	0.000	12/15/14	Tue	1543	Rear-End	0	0	1	Day	Dry	Not Coded
1475	0.000	12/15/14	Tue	0825	Parked Motor Vehicle	0	0	1	Day	Dry	Not Coded
1476	0.000	12/15/14	Tue	1515	Rear-End	0	0	1	Day	Dry	Not Coded
1477	0.000	12/15/14	Tue	1045	Tree (Standing)	0	0	1	Day	Dry	Not Coded
1478	0.000	12/16/14	Wed	1917	Angle	0	0	1	Night	Dry	Not Coded
1479	0.000	12/16/14	Wed	1810	Left-Turn	0	0	1	Night	Dry	Not Coded
1480	0.000	12/16/14	Wed	1547	Left-Turn	0	0	1	Day	Dry	Not Coded
1481	0.000	12/17/14	Thu	1640	Left-Turn	0	0	1	Day	Dry	Not Coded
1482	0.000	12/17/14	Thu	1915	Sideswipe	0	0	1	Night	Dry	Not Coded
1483	0.000	12/17/14	Thu	1410	Rear-End	0	0	1	Day	Dry	Not Coded
1484	0.000	12/17/14	Thu	1030	Right-Turn	0	0	1	Day	Dry	Not Coded
1485	0.000	12/17/14	Thu	1730	Left-Turn	0	0	1	Night	Dry	Not Coded
1486	0.000	12/17/14	Thu	1030	Sideswipe	0	0	1	Day	Dry	Not Coded
1487	0.000	12/18/14	Fri	1740	Head-On	0	0	1	Day	Dry	Not Coded
1488	0.000	12/18/14	Fri	1000	Angle	0	0	1	Day	Dry	Not Coded
1489	0.000	12/18/14	Fri	1057	Rear-End	0	0	1	Day	Dry	Not Coded
1490	0.000	12/19/14	Sat	0830	Rear-End	0	0	1	Day	Dry	Not Coded
1491	0.000	12/19/14	Sat	1812	Rear-End	0	1	0	Night	Dry	Not Coded
1492	0.000	12/19/14	Sat	1640	Rear-End	0	0	1	Day	Dry	Not Coded
1493	0.000	12/19/14	Sat	0744	Rear-End	0	0	1	Day	Dry	Not Coded
1494	0.000	12/19/14	Sat	1125	Rear-End	0	1	0	Day	Dry	Not Coded
1495	0.000	12/20/14	Sun	1818	Left-Turn	0	0	1	Night	Dry	Not Coded
1496	0.000	12/20/14	Sun	2129	Sideswipe	0	0	1	Night	Dry	Not Coded
1497	0.000	12/20/14	Sun	2040	Sideswipe	0	0	1	Night	Dry	Not Coded
1498	0.000	12/22/14	Tue	1844	Rear-End	0	0	1	Night	Dry	Not Coded
1499	0.000	12/22/14	Tue	1835	Rear-End	0	0	1	Night	Dry	Not Coded
1500	0.000	12/22/14	Tue	1209	Rear-End	0	0	1	Day	Dry	Not Coded
1501	0.000	12/22/14	Tue	2041	Head-On	0	0	1	Night	Dry	Not Coded
1502	0.000	12/22/14	Tue	1551	Rear-End	0	0	1	Day	Dry	Not Coded
1503	0.000	12/22/14	Tue	0816	Rear-End	0	0	1	Day	Dry	Not Coded
1504	0.000	12/22/14	Tue	1210	Rear-End	0	0	1	Day	Dry	Not Coded
1505	0.000	12/23/14	Wed	1814	Rear-End	0	0	1	Night	Dry	Not Coded
1506	0.000	12/23/14	Wed	1705	Sideswipe	0	0	1	Day	Dry	Not Coded
1507	0.000	12/23/14	Wed	1851	Rear-End	0	0	1	Night	Dry	Not Coded
1508	0.000	12/23/14	Wed	1820	Angle	0	0	1	Night	Dry	Not Coded
1509	0.000	12/23/14	Wed	1820	Rear-End	0	0	1	Night	Dry	Not Coded
1510	0.000	12/23/14	Wed	1653	Angle	0	0	1	Day	Dry	Not Coded
1511	0.000	12/24/14	Thu	1545	Angle	0	0	1	Day	Dry	Not Coded
1512	0.000	12/24/14	Thu	1015	Rear-End	0	1	0	Day	Dry	Not Coded
1513	0.000	12/25/14	Fri	0239	Angle	0	0	1	Night	Wet	Not Coded
1514	0.000	12/25/14	Fri	1804	Angle	0	0	1	Night	Dry	Not Coded
1515	0.000	12/26/14	Sat	0735	Sideswipe	0	1	0	Day	Dry	Not Coded
1516	0.000	12/26/14	Sat	2022	Angle	0	1	0	Night	Dry	Not Coded
1517	0.000	12/26/14	Sat	1748	Rear-End	0	0	1	Night	Dry	Not Coded
1518	0.000	12/26/14	Sat	1400	Rear-End	0	0	1	Day	Dry	Not Coded
1519	0.000	12/26/14	Sat	1159	Not Coded	0	0	1	Day	Dry	Not Coded
1520	0.000	12/26/14	Sat	2328	Angle	0	1	0	Night	Dry	Not Coded
1521	0.000	12/27/14	Sun	1420	Angle	0	0	1	Day	Dry	Not Coded
1522	0.000	12/27/14	Sun	1245	Left-Turn	0	0	1	Day	Dry	Not Coded
1523	0.000	12/28/14	Mon	1943	Sideswipe	0	0	1	Night	Dry	Not Coded
1524	0.000	12/28/14	Mon	1900	Left-Turn	0	0	1	Day	Dry	Not Coded
1525	0.000	12/28/14	Mon	1505	Backed Into	0	0	1	Day	Dry	Not Coded
1526	0.000	12/28/14	Mon	2155	Angle	0	0	1	Night	Dry	Not Coded
1527	0.000	12/29/14	Tue	0740	Right-Turn	0	0	1	Day	Dry	Not Coded
1528	0.000	12/29/14	Tue	1800	Angle	0	0	1	Day	Dry	Not Coded
1529	0.000	12/29/14	Tue	1727	Rear-End	0	0	1	Day	Dry	Not Coded
1530	0.000	12/29/14	Tue	1530	Sideswipe	0	0	1	Day	Dry	Not Coded

State of Florida Department of Transportation
CRASH SUMMARY

SECTION: Ludlam Trail Corridor f — STATE ROUTE: #N/A

ROADWAY LIMITS: 0 — M.P. 0.000 TO 0.000 — ENGINEER: 0

STUDY PERIOD: FROM 1/ 2014 TO 12/ 2014 — COUNTY: Miami-Dade

No.	MILE POST	DATE	DAY	TIME	CRASH TYPE	FATAL	INJURIES	PROP DAM	DAY / NIGHT	WET / DRY	CONTRIBUTING CAUSE (VEHICLE ONLY)
1531	0.000	12/30/14	Wed	1350	Sideswipe	0	0	1	Day	Dry	Not Coded
1532	0.000	12/30/14	Wed	1545	Rear-End	0	1	0	Day	Dry	Not Coded
1533	0.000	12/30/14	Wed	1520	Left-Turn	0	0	1	Day	Dry	Not Coded
1534	0.000	12/30/14	Wed	2042	Rear-End	0	0	1	Night	Dry	Not Coded
1535	0.000	12/30/14	Wed	1536	Rear-End	0	0	1	Day	Dry	Not Coded
1536	0.000	12/30/14	Wed	2130	Pedestrian	0	0	1	Night	Dry	Not Coded
1537	0.000	12/31/14	Thu	1150	Rear-End	0	0	1	Day	Dry	Not Coded
1538	0.000	12/31/14	Thu	1235	Parked Motor Vehicle	0	0	1	Day	Dry	Not Coded

Total No.	Fatal	Injury	PDO	Rear-End	Head-On	Angle	Left-Turn	Right-Turn	Sideswipe	Backed Into	Ped/Bike	Parked Car	Fixed Object	Ran into Water	Other
1538	**1**	**219**	**1319**	**607**	**13**	**283**	**229**	**44**	**197**	**60**	**10**	**33**	**17**	**0**	**35**
Percent	*0.07%*	*14.24%*	*85.76%*	*39.47%*	*0.85%*	*18.40%*	*14.89%*	*2.86%*	*12.81%*	*3.90%*	*0.65%*	*2.15%*	*1.11%*	*0.00%*	*2.28%*

State of Florida Department of Transportation
CRASH SUMMARY

SECTION: Ludlam Trail Corridor f — STATE ROUTE: #N/A
ROADWAY LIMITS: 0 — M.P. 0.000 TO 0.000 — ENGINEER: 0
STUDY PERIOD: FROM 1/ 2015 TO 12/ 2015 — COUNTY: Miami-Dade

No.	MILE POST	DATE	DAY	TIME	CRASH TYPE	FATAL	INJURIES	PROP DAM	DAY / NIGHT	WET / DRY	CONTRIBUTING CAUSE (VEHICLE ONLY)
1	0.000	01/01/15	Fri	1356	Angle	0	0	1	Day	Dry	Not Coded
2	0.000	01/03/15	Sun	1813	Rear-End	0	1	0	Night	Dry	Not Coded
3	0.000	01/04/15	Mon	1840	Pedestrian	0	0	1	Night	Dry	Not Coded
4	0.000	01/05/15	Tue	1350	Sideswipe	0	0	1	Day	Dry	Not Coded
5	0.000	01/05/15	Tue	1336	Angle	0	0	1	Day	Dry	Not Coded
6	0.000	01/05/15	Tue	0618	Rear-End	0	0	1	Night	Wet	Not Coded
7	0.000	01/05/15	Tue	2005	Rear-End	0	0	1	Night	Dry	Not Coded
8	0.000	01/05/15	Tue	0825	Rear-End	0	0	1	Day	Dry	Not Coded
9	0.000	01/05/15	Tue	1659	Parked Motor Vehicle	0	0	1	Day	Dry	Not Coded
10	0.000	01/06/15	Wed	1735	Rear-End	0	0	1	Night	Dry	Not Coded
11	0.000	01/06/15	Wed	1620	Rear-End	0	1	0	Day	Dry	Not Coded
12	0.000	01/06/15	Wed	2049	Rear-End	0	0	1	Night	Dry	Not Coded
13	0.000	01/06/15	Wed	1330	Sideswipe	0	0	1	Day	Dry	Not Coded
14	0.000	01/06/15	Wed	0635	Left-Turn	0	0	1	Night	Dry	Not Coded
15	0.000	01/06/15	Wed	1900	Rear-End	0	0	1	Night	Dry	Not Coded
16	0.000	01/06/15	Wed	1420	Rear-End	0	0	1	Day	Dry	Not Coded
17	0.000	01/06/15	Wed	1817	Sideswipe	0	0	1	Day	Dry	Not Coded
18	0.000	01/06/15	Wed	2232	Angle	0	0	1	Night	Dry	Not Coded
19	0.000	01/07/15	Thu	1419	Not Coded	0	1	0	Day	Dry	Not Coded
20	0.000	01/07/15	Thu	2013	Left-Turn	0	1	0	Night	Dry	Not Coded
21	0.000	01/07/15	Thu	1255	Rear-End	0	1	0	Day	Dry	Not Coded
22	0.000	01/08/15	Fri	1407	Sideswipe	0	0	1	Day	Dry	Not Coded
23	0.000	01/08/15	Fri	1130	Left-Turn	0	0	1	Day	Dry	Not Coded
24	0.000	01/08/15	Fri	1800	Angle	0	0	1	Day	Dry	Not Coded
25	0.000	01/08/15	Fri	1653	Right-Turn	0	0	1	Day	Dry	Not Coded
26	0.000	01/08/15	Fri	1655	Rear-End	0	0	1	Day	Dry	Not Coded
27	0.000	01/08/15	Fri	2150	Rear-End	0	0	1	Night	Dry	Not Coded
28	0.000	01/08/15	Fri	1345	Rear-End	0	0	1	Day	Dry	Not Coded
29	0.000	01/09/15	Sat	1455	Rear-End	0	1	0	Day	Dry	Not Coded
30	0.000	01/09/15	Sat	0837	Parked Motor Vehicle	0	0	1	Day	Dry	Not Coded
31	0.000	01/09/15	Sat	1706	Sideswipe	0	0	1	Day	Dry	Not Coded
32	0.000	01/09/15	Sat	1541	Left-Turn	0	0	1	Day	Dry	Not Coded
33	0.000	01/09/15	Sat	1550	Left-Turn	0	0	1	Day	Dry	Not Coded
34	0.000	01/09/15	Sat	1840	Sideswipe	0	0	1	Night	Dry	Not Coded
35	0.000	01/10/15	Sun	0015	Not Coded	0	0	1	Night	Dry	Not Coded
36	0.000	01/10/15	Sun	1750	Angle	0	0	1	Night	Dry	Not Coded
37	0.000	01/10/15	Sun	0926	Sideswipe	0	1	0	Day	Dry	Not Coded
38	0.000	01/11/15	Mon	1238	Sideswipe	0	0	1	Day	Dry	Not Coded
39	0.000	01/11/15	Mon	1430	Left-Turn	0	0	1	Day	Wet	Not Coded
40	0.000	01/12/15	Tue	0941	Rear-End	0	1	0	Day	Wet	Not Coded
41	0.000	01/12/15	Tue	1650	Left-Turn	0	0	1	Day	Dry	Not Coded
42	0.000	01/12/15	Tue	1404	Sideswipe	0	0	1	Day	Dry	Not Coded
43	0.000	01/12/15	Tue	1824	Parked Motor Vehicle	0	0	1	Night	Dry	Not Coded
44	0.000	01/12/15	Tue	0735	Angle	0	1	0	Day	Wet	Not Coded
45	0.000	01/12/15	Tue	0850	Rear-End	0	0	1	Day	Dry	Not Coded
46	0.000	01/12/15	Tue	1454	Not Coded	0	0	1	Day	Dry	Not Coded
47	0.000	01/12/15	Tue	0905	Sideswipe	0	0	1	Day	Wet	Not Coded
48	0.000	01/12/15	Tue	1145	Not Coded	0	0	1	Day	Dry	Not Coded
49	0.000	01/12/15	Tue	1350	Rear-End	0	0	1	Day	Wet	Not Coded
50	0.000	01/13/15	Wed	1932	Left-Turn	0	0	1	Night	Wet	Not Coded
51	0.000	01/13/15	Wed	0840	Rear-End	0	0	1	Day	Wet	Not Coded
52	0.000	01/13/15	Wed	1919	Sideswipe	0	0	1	Night	Dry	Not Coded
53	0.000	01/13/15	Wed	1024	Sideswipe	0	0	1	Day	Wet	Not Coded
54	0.000	01/13/15	Wed	1909	Rear-End	0	0	1	Night	Dry	Not Coded
55	0.000	01/13/15	Wed	0800	Rear-End	0	0	1	Day	Dry	Not Coded
56	0.000	01/13/15	Wed	1913	Left-Turn	0	1	0	Night	Dry	Not Coded
57	0.000	01/13/15	Wed	1640	Left-Turn	0	0	1	Day	Dry	Not Coded
58	0.000	01/13/15	Wed	1532	Rear-End	0	0	1	Day	Dry	Not Coded
59	0.000	01/13/15	Wed	1600	Sideswipe	0	0	1	Day	Dry	Not Coded
60	0.000	01/14/15	Thu	1250	Sideswipe	0	0	1	Day	Dry	Not Coded
61	0.000	01/14/15	Thu	1005	Rear-End	0	0	1	Day	Dry	Not Coded
62	0.000	01/14/15	Thu	1035	Left-Turn	0	0	1	Day	Dry	Not Coded
63	0.000	01/14/15	Thu	1500	Rear-End	0	0	1	Day	Dry	Not Coded
64	0.000	01/14/15	Thu	1610	Rear-End	0	0	1	Day	Dry	Not Coded
65	0.000	01/14/15	Thu	1800	Rear-End	0	0	1	Night	Dry	Not Coded
66	0.000	01/15/15	Fri	1430	Angle	0	1	0	Day	Dry	Not Coded
67	0.000	01/15/15	Fri	2235	Rear-End	0	0	1	Night	Dry	Not Coded
68	0.000	01/15/15	Fri	0452	Pedalcycle	0	0	1	Night	Dry	Not Coded
69	0.000	01/15/15	Fri	1828	Rear-End	0	1	0	Night	Dry	Not Coded

State of Florida Department of Transportation
CRASH SUMMARY

SECTION: Ludlam Trail Corridor f | STATE ROUTE: #N/A
ROADWAY LIMITS: 0 | M.P. 0.000 TO 0.000 | ENGINEER: 0
STUDY PERIOD: FROM 1/ 2015 TO 12/ 2015 | COUNTY: Miami-Dade

No.	MILE POST	DATE	DAY	TIME	CRASH TYPE	FATAL	INJURIES	PROP DAM	DAY / NIGHT	WET / DRY	CONTRIBUTING CAUSE (VEHICLE ONLY)
70	0.000	01/15/15	Fri	1245	Sideswipe	0	0	1	Day	Dry	Not Coded
71	0.000	01/16/15	Sat	1549	Left-Turn	0	0	1	Day	Dry	Not Coded
72	0.000	01/16/15	Sat	1248	Angle	0	0	1	Day	Dry	Not Coded
73	0.000	01/16/15	Sat	1941	Rear-End	0	0	1	Night	Dry	Not Coded
74	0.000	01/17/15	Sun	1735	Sideswipe	0	0	1	Night	Dry	Not Coded
75	0.000	01/17/15	Sun	0015	Angle	0	1	0	Night	Dry	Not Coded
76	0.000	01/17/15	Sun	0950	Parked Motor Vehicle	0	0	1	Day	Dry	Not Coded
77	0.000	01/18/15	Mon	1111	Animal	0	1	0	Day	Dry	Not Coded
78	0.000	01/18/15	Mon	1135	Rear-End	0	0	1	Day	Dry	Not Coded
79	0.000	01/18/15	Mon	1544	Rear-End	0	0	1	Day	Dry	Not Coded
80	0.000	01/19/15	Tue	1145	Rear-End	0	0	1	Day	Dry	Not Coded
81	0.000	01/19/15	Tue	1808	Parked Motor Vehicle	0	0	1	Night	Dry	Not Coded
82	0.000	01/19/15	Tue	1535	Angle	0	0	1	Day	Dry	Not Coded
83	0.000	01/19/15	Tue	1345	Angle	0	0	1	Day	Dry	Not Coded
84	0.000	01/19/15	Tue	2304	Sideswipe	0	0	1	Night	Dry	Not Coded
85	0.000	01/19/15	Tue	1745	Rear-End	0	0	1	Day	Dry	Not Coded
86	0.000	01/19/15	Tue	2100	Sideswipe	0	1	0	Night	Dry	Not Coded
87	0.000	01/20/15	Wed	0710	Rear-End	0	0	1	Day	Dry	Not Coded
88	0.000	01/20/15	Wed	1301	Pedestrian	0	0	1	Day	Dry	Not Coded
89	0.000	01/20/15	Wed	1916	Parked Motor Vehicle	0	0	1	Night	Dry	Not Coded
90	0.000	01/20/15	Wed	2155	Angle	0	0	1	Night	Dry	Not Coded
91	0.000	01/20/15	Wed	2100	Parked Motor Vehicle	0	0	1	Night	Dry	Not Coded
92	0.000	01/20/15	Wed	1811	Not Coded	0	0	1	Night	Dry	Not Coded
93	0.000	01/21/15	Thu	0900	Angle	0	0	1	Day	Dry	Not Coded
94	0.000	01/21/15	Thu	1312	Rear-End	0	0	1	Day	Dry	Not Coded
95	0.000	01/21/15	Thu	2020	Sideswipe	0	0	1	Night	Dry	Not Coded
96	0.000	01/21/15	Thu	1604	Left-Turn	0	0	1	Day	Dry	Not Coded
97	0.000	01/21/15	Thu	2005	Angle	0	0	1	Night	Dry	Not Coded
98	0.000	01/21/15	Thu	2044	Rear-End	0	0	1	Night	Dry	Not Coded
99	0.000	01/22/15	Fri	1629	Backed Into	0	0	1	Day	Dry	Not Coded
100	0.000	01/22/15	Fri	0744	Rear-End	0	0	1	Day	Dry	Not Coded
101	0.000	01/22/15	Fri	1125	Rear-End	0	0	1	Day	Dry	Not Coded
102	0.000	01/22/15	Fri	2021	Angle	0	1	0	Night	Dry	Not Coded
103	0.000	01/22/15	Fri	1432	Angle	0	1	0	Day	Dry	Not Coded
104	0.000	01/22/15	Fri	0711	Rear-End	0	0	1	Day	Dry	Not Coded
105	0.000	01/22/15	Fri	1430	Rear-End	0	0	1	Day	Dry	Not Coded
106	0.000	01/23/15	Sat	1621	Left-Turn	0	0	1	Day	Dry	Not Coded
107	0.000	01/23/15	Sat	1356	Right-Turn	0	0	1	Day	Dry	Not Coded
108	0.000	01/23/15	Sat	1706	Rear-End	0	0	1	Day	Dry	Not Coded
109	0.000	01/23/15	Sat	0910	Sideswipe	0	0	1	Day	Dry	Not Coded
110	0.000	01/23/15	Sat	0805	Left-Turn	0	0	1	Day	Dry	Not Coded
111	0.000	01/23/15	Sat	2113	Rear-End	0	0	1	Night	Dry	Not Coded
112	0.000	01/23/15	Sat	1529	Rear-End	0	0	1	Day	Dry	Not Coded
113	0.000	01/24/15	Sun	1158	Right-Turn	0	0	1	Day	Dry	Not Coded
114	0.000	01/24/15	Sun	1700	Left-Turn	0	0	1	Day	Dry	Not Coded
115	0.000	01/25/15	Mon	1140	Rear-End	0	1	0	Day	Dry	Not Coded
116	0.000	01/25/15	Mon	1840	Pedestrian	0	0	1	Night	Dry	Not Coded
117	0.000	01/25/15	Mon	1750	Rear-End	0	0	1	Day	Dry	Not Coded
118	0.000	01/25/15	Mon	1614	Left-Turn	0	0	1	Day	Dry	Not Coded
119	0.000	01/26/15	Tue	1911	Rear-End	0	0	1	Night	Dry	Not Coded
120	0.000	01/26/15	Tue	1500	Rear-End	0	0	1	Day	Dry	Not Coded
121	0.000	01/26/15	Tue	1524	Left-Turn	0	0	1	Day	Dry	Not Coded
122	0.000	01/26/15	Tue	1130	Angle	0	0	1	Day	Dry	Not Coded
123	0.000	01/26/15	Tue	0915	Rear-End	0	0	1	Day	Dry	Not Coded
124	0.000	01/27/15	Wed	1332	Angle	0	0	1	Day	Dry	Not Coded
125	0.000	01/27/15	Wed	1234	Sideswipe	0	0	1	Day	Dry	Not Coded
126	0.000	01/27/15	Wed	1430	Left-Turn	0	0	1	Day	Dry	Not Coded
127	0.000	01/28/15	Thu	1545	Rear-End	0	0	1	Day	Dry	Not Coded
128	0.000	01/28/15	Thu	1608	Rear-End	0	0	1	Day	Dry	Not Coded
129	0.000	01/28/15	Thu	0824	Right-Turn	0	1	0	Day	Dry	Not Coded
130	0.000	01/28/15	Thu	0902	Left-Turn	0	1	0	Day	Dry	Not Coded
131	0.000	01/28/15	Thu	1000	Sideswipe	0	0	1	Day	Dry	Not Coded
132	0.000	01/29/15	Fri	1930	Angle	0	0	1	Night	Dry	Not Coded
133	0.000	01/29/15	Fri	2042	Right-Turn	0	0	1	Night	Dry	Not Coded
134	0.000	01/29/15	Fri	1030	Left-Turn	0	0	1	Day	Dry	Not Coded
135	0.000	01/29/15	Fri	1630	Rear-End	0	0	1	Day	Dry	Not Coded
136	0.000	01/29/15	Fri	1243	Left-Turn	0	1	0	Day	Dry	Not Coded
137	0.000	01/29/15	Fri	1045	Rear-End	0	0	1	Day	Dry	Not Coded
138	0.000	01/30/15	Sat	1739	Rear-End	0	0	1	Day	Dry	Not Coded

State of Florida Department of Transportation
CRASH SUMMARY

SECTION: Ludlam Trail Corridor f — STATE ROUTE: #N/A
ROADWAY LIMITS: 0 — M.P. 0.000 TO 0.000 — ENGINEER: 0
STUDY PERIOD: FROM 1/ 2015 TO 12/ 2015 — COUNTY: Miami-Dade

No.	MILE POST	DATE	DAY	TIME	CRASH TYPE	FATAL	INJURIES	PROP DAM	DAY / NIGHT	WET / DRY	CONTRIBUTING CAUSE (VEHICLE ONLY)
139	0.000	01/30/15	Sat	1550	Parked Motor Vehicle	0	0	1	Day	Dry	Not Coded
140	0.000	01/30/15	Sat	1639	Rear-End	0	0	1	Day	Dry	Not Coded
141	0.000	01/30/15	Sat	1735	Rear-End	0	0	1	Day	Dry	Not Coded
142	0.000	01/30/15	Sat	1600	Not Coded	0	0	1	Day	Dry	Not Coded
143	0.000	01/30/15	Sat	0758	Angle	0	0	1	Day	Dry	Not Coded
144	0.000	01/31/15	Sun	1157	Sideswipe	0	1	0	Day	Dry	Not Coded
145	0.000	01/31/15	Sun	1645	Rear-End	0	0	1	Day	Dry	Not Coded
146	0.000	01/31/15	Sun	1510	Rear-End	0	0	1	Day	Dry	Not Coded
147	0.000	02/01/15	Mon	0433	Left-Turn	0	1	0	Night	Dry	Not Coded
148	0.000	02/01/15	Mon	1356	Angle	0	0	1	Night	Dry	Not Coded
149	0.000	02/01/15	Mon	1531	Rear-End	0	0	1	Day	Dry	Not Coded
150	0.000	02/02/15	Tue	1110	Rear-End	0	0	1	Day	Dry	Not Coded
151	0.000	02/02/15	Tue	1640	Angle	0	0	1	Day	Dry	Not Coded
152	0.000	02/02/15	Tue	1756	Right-Turn	0	0	1	Day	Dry	Not Coded
153	0.000	02/02/15	Tue	0715	Left-Turn	0	0	1	Day	Dry	Not Coded
154	0.000	02/02/15	Tue	1513	Left-Turn	0	0	1	Day	Dry	Not Coded
155	0.000	02/02/15	Tue	1919	Backed Into	0	1	0	Night	Dry	Not Coded
156	0.000	02/02/15	Tue	1308	Rear-End	0	0	1	Day	Dry	Not Coded
157	0.000	02/02/15	Tue	1042	Parked Motor Vehicle	0	0	1	Day	Dry	Not Coded
158	0.000	02/03/15	Wed	1950	Rear-End	0	0	1	Night	Dry	Not Coded
159	0.000	02/03/15	Wed	1355	Rear-End	0	0	1	Day	Dry	Not Coded
160	0.000	02/03/15	Wed	1302	Angle	0	0	1	Day	Dry	Not Coded
161	0.000	02/03/15	Wed	1026	Backed Into	0	1	0	Day	Dry	Not Coded
162	0.000	02/04/15	Thu	1345	Rear-End	0	0	1	Day	Dry	Not Coded
163	0.000	02/04/15	Thu	0721	Sideswipe	0	0	1	Day	Dry	Not Coded
164	0.000	02/04/15	Thu	1045	Pedalcycle	0	1	0	Day	Dry	Not Coded
165	0.000	02/05/15	Fri	0620	Rear-End	0	0	1	Day	Dry	Not Coded
166	0.000	02/05/15	Fri	1323	Left-Turn	0	1	0	Day	Dry	Not Coded
167	0.000	02/05/15	Fri	0827	Rear-End	0	0	1	Day	Wet	Not Coded
168	0.000	02/05/15	Fri	1330	Angle	0	0	1	Day	Dry	Not Coded
169	0.000	02/05/15	Fri	1525	Rear-End	0	0	1	Day	Wet	Not Coded
170	0.000	02/06/15	Sat	1136	Rear-End	0	0	1	Day	Dry	Not Coded
171	0.000	02/06/15	Sat	1503	Angle	0	0	1	Day	Dry	Not Coded
172	0.000	02/06/15	Sat	0803	Left-Turn	0	0	1	Day	Dry	Not Coded
173	0.000	02/06/15	Sat	0710	Left-Turn	0	0	1	Day	Dry	Not Coded
174	0.000	02/06/15	Sat	2015	Right-Turn	0	0	1	Night	Dry	Not Coded
175	0.000	02/06/15	Sat	1940	Rear-End	0	0	1	Night	Dry	Not Coded
176	0.000	02/06/15	Sat	1626	Angle	0	0	1	Day	Dry	Not Coded
177	0.000	02/06/15	Sat	1927	Angle	0	0	1	Night	Wet	Not Coded
178	0.000	02/07/15	Sun	0935	Angle	0	0	1	Day	Dry	Not Coded
179	0.000	02/07/15	Sun	0044	Sideswipe	0	0	1	Night	Dry	Not Coded
180	0.000	02/09/15	Tue	1658	Left-Turn	0	0	1	Day	Dry	Not Coded
181	0.000	02/09/15	Tue	1457	Angle	0	0	1	Day	Dry	Not Coded
182	0.000	02/09/15	Tue	1026	Rear-End	0	0	1	Day	Wet	Not Coded
183	0.000	02/10/15	Wed	1330	Rear-End	0	0	1	Day	Dry	Not Coded
184	0.000	02/10/15	Wed	1515	Angle	0	1	0	Day	Dry	Not Coded
185	0.000	02/10/15	Wed	1510	Sideswipe	0	0	1	Day	Dry	Not Coded
186	0.000	02/10/15	Wed	1120	Rear-End	0	0	1	Day	Dry	Not Coded
187	0.000	02/10/15	Wed	1430	Rear-End	0	0	1	Day	Dry	Not Coded
188	0.000	02/10/15	Wed	0638	Rear-End	0	0	1	Night	Dry	Not Coded
189	0.000	02/11/15	Thu	0815	Angle	0	0	1	Day	Dry	Not Coded
190	0.000	02/11/15	Thu	0740	Angle	0	0	1	Day	Dry	Not Coded
191	0.000	02/11/15	Thu	0930	Rear-End	0	0	1	Day	Dry	Not Coded
192	0.000	02/11/15	Thu	0857	Rear-End	0	0	1	Day	Dry	Not Coded
193	0.000	02/12/15	Fri	1738	Rear-End	0	0	1	Night	Dry	Not Coded
194	0.000	02/12/15	Fri	1843	Rear-End	0	0	1	Night	Dry	Not Coded
195	0.000	02/12/15	Fri	1830	Left-Turn	0	0	1	Day	Dry	Not Coded
196	0.000	02/12/15	Fri	1340	Left-Turn	0	0	1	Day	Dry	Not Coded
197	0.000	02/12/15	Fri	1801	Left-Turn	0	0	1	Night	Dry	Not Coded
198	0.000	02/12/15	Fri	1730	Left-Turn	0	0	1	Day	Dry	Not Coded
199	0.000	02/13/15	Sat	1301	Left-Turn	0	0	1	Day	Dry	Not Coded
200	0.000	02/13/15	Sat	1455	Left-Turn	0	0	1	Day	Dry	Not Coded
201	0.000	02/13/15	Sat	1333	Angle	0	0	1	Day	Dry	Not Coded
202	0.000	02/13/15	Sat	1809	Left-Turn	0	0	1	Night	Dry	Not Coded
203	0.000	02/13/15	Sat	1755	Sideswipe	0	0	1	Day	Dry	Not Coded
204	0.000	02/13/15	Sat	2134	Rear-End	0	0	1	Night	Dry	Not Coded
205	0.000	02/13/15	Sat	1217	Rear-End	0	0	1	Day	Dry	Not Coded
206	0.000	02/13/15	Sat	1310	Angle	0	0	1	Day	Dry	Not Coded
207	0.000	02/14/15	Sun	1422	Sideswipe	0	0	1	Day	Dry	Not Coded

State of Florida Department of Transportation
CRASH SUMMARY

SECTION: Ludlam Trail Corridor f — STATE ROUTE: #N/A
ROADWAY LIMITS: 0 — M.P. 0.000 TO 0.000 — ENGINEER: 0
STUDY PERIOD: FROM 1/ 2015 TO 12/ 2015 — COUNTY: Miami-Dade

No.	MILE POST	DATE	DAY	TIME	CRASH TYPE	FATAL	INJURIES	PROP DAM	DAY / NIGHT	WET / DRY	CONTRIBUTING CAUSE (VEHICLE ONLY)
208	0.000	02/15/15	Mon	2330	Animal	0	0	1	Night	Dry	Not Coded
209	0.000	02/15/15	Mon	1830	Backed Into	0	1	0	Day	Dry	Not Coded
210	0.000	02/16/15	Tue	1306	Angle	0	0	1	Day	Dry	Not Coded
211	0.000	02/16/15	Tue	1255	Sideswipe	1	0	0	Day	Dry	Not Coded
212	0.000	02/16/15	Tue	0902	Angle	0	0	1	Day	Dry	Not Coded
213	0.000	02/16/15	Tue	1416	Rear-End	0	0	1	Day	Dry	Not Coded
214	0.000	02/17/15	Wed	1525	Head-On	0	1	0	Day	Dry	Not Coded
215	0.000	02/17/15	Wed	1854	Rear-End	0	0	1	Night	Dry	Not Coded
216	0.000	02/17/15	Wed	0951	Rear-End	0	0	1	Day	Dry	Not Coded
217	0.000	02/17/15	Wed	0952	Sideswipe	0	1	0	Day	Dry	Not Coded
218	0.000	02/17/15	Wed	0835	Parked Motor Vehicle	0	0	1	Day	Dry	Not Coded
219	0.000	02/17/15	Wed	0835	Rear-End	0	0	1	Day	Dry	Not Coded
220	0.000	02/18/15	Thu	1122	Parked Motor Vehicle	0	1	0	Day	Wet	Not Coded
221	0.000	02/18/15	Thu	0925	Angle	0	0	1	Day	Wet	Not Coded
222	0.000	02/18/15	Thu	0808	Rear-End	0	0	1	Day	Dry	Not Coded
223	0.000	02/18/15	Thu	1950	Sideswipe	0	0	1	Night	Dry	Not Coded
224	0.000	02/18/15	Thu	1830	Sideswipe	0	0	1	Night	Dry	Not Coded
225	0.000	02/18/15	Thu	1814	Sideswipe	0	1	0	Night	Dry	Not Coded
226	0.000	02/18/15	Thu	1348	Rear-End	0	0	1	Day	Dry	Not Coded
227	0.000	02/19/15	Fri	1125	Angle	0	1	0	Day	Dry	Not Coded
228	0.000	02/19/15	Fri	1959	Left-Turn	0	1	0	Night	Dry	Not Coded
229	0.000	02/19/15	Fri	1801	Rear-End	0	0	1	Day	Dry	Not Coded
230	0.000	02/19/15	Fri	1546	Left-Turn	0	0	1	Day	Dry	Not Coded
231	0.000	02/19/15	Fri	0705	Rear-End	0	0	1	Day	Dry	Not Coded
232	0.000	02/19/15	Fri	1205	Left-Turn	0	0	1	Day	Dry	Not Coded
233	0.000	02/19/15	Fri	1300	Rear-End	0	1	0	Day	Dry	Not Coded
234	0.000	02/19/15	Fri	0909	Angle	0	0	1	Day	Dry	Not Coded
235	0.000	02/19/15	Fri	0745	Not Coded	0	0	1	Day	Dry	Not Coded
236	0.000	02/19/15	Fri	1733	Left-Turn	0	0	1	Day	Dry	Not Coded
237	0.000	02/20/15	Sat	0754	Sideswipe	0	0	1	Day	Dry	Not Coded
238	0.000	02/20/15	Sat	1450	Left-Turn	0	0	1	Day	Dry	Not Coded
239	0.000	02/20/15	Sat	1828	Rear-End	0	0	1	Night	Dry	Not Coded
240	0.000	02/20/15	Sat	1658	Rear-End	0	0	1	Day	Dry	Not Coded
241	0.000	02/20/15	Sat	1652	Sideswipe	0	0	1	Day	Dry	Not Coded
242	0.000	02/20/15	Sat	1550	Traffic Signal Support	0	0	1	Day	Dry	Not Coded
243	0.000	02/21/15	Sun	2245	Rear-End	0	0	1	Night	Dry	Not Coded
244	0.000	02/23/15	Tue	1155	Left-Turn	0	0	1	Day	Dry	Not Coded
245	0.000	02/23/15	Tue	1115	Rear-End	0	0	1	Day	Dry	Not Coded
246	0.000	02/23/15	Tue	1620	Rear-End	0	0	1	Day	Dry	Not Coded
247	0.000	02/23/15	Tue	1623	Angle	0	1	0	Day	Dry	Not Coded
248	0.000	02/23/15	Tue	1015	Other Post, Pole Or Support	0	0	1	Day	Dry	Not Coded
249	0.000	02/23/15	Tue	1832	Right-Turn	0	0	1	Night	Dry	Not Coded
250	0.000	02/23/15	Tue	1340	Parked Motor Vehicle	0	0	1	Day	Dry	Not Coded
251	0.000	02/23/15	Tue	1532	Rear-End	0	0	1	Day	Dry	Not Coded
252	0.000	02/23/15	Tue	0850	Right-Turn	0	0	1	Day	Dry	Not Coded
253	0.000	02/23/15	Tue	1050	Right-Turn	0	0	1	Day	Dry	Not Coded
254	0.000	02/24/15	Wed	1220	Angle	0	0	1	Day	Dry	Not Coded
255	0.000	02/24/15	Wed	1250	Rear-End	0	0	1	Day	Dry	Not Coded
256	0.000	02/24/15	Wed	1035	Angle	0	0	1	Day	Dry	Not Coded
257	0.000	02/24/15	Wed	1400	Sideswipe	0	0	1	Day	Dry	Not Coded
258	0.000	02/25/15	Thu	0734	Sideswipe	0	0	1	Day	Dry	Not Coded
259	0.000	02/25/15	Thu	0931	Right-Turn	0	1	0	Day	Dry	Not Coded
260	0.000	02/25/15	Thu	0940	Left-Turn	0	0	1	Day	Dry	Not Coded
261	0.000	02/25/15	Thu	2000	Rear-End	0	0	1	Night	Dry	Not Coded
262	0.000	02/25/15	Thu	1209	Left-Turn	0	1	0	Day	Dry	Not Coded
263	0.000	02/26/15	Fri	1220	Left-Turn	0	0	1	Day	Dry	Not Coded
264	0.000	02/26/15	Fri	1310	Rear-End	0	0	1	Day	Dry	Not Coded
265	0.000	02/26/15	Fri	1235	Rear-End	0	0	1	Day	Dry	Not Coded
266	0.000	02/27/15	Sat	1640	Sideswipe	0	0	1	Day	Dry	Not Coded
267	0.000	02/27/15	Sat	1215	Angle	0	0	1	Day	Dry	Not Coded
268	0.000	02/27/15	Sat	0825	Rear-End	0	0	1	Day	Dry	Not Coded
269	0.000	02/27/15	Sat	1920	Angle	0	0	1	Night	Dry	Not Coded
270	0.000	02/27/15	Sat	2120	Left-Turn	0	0	1	Night	Dry	Not Coded
271	0.000	02/27/15	Sat	1950	Angle	0	0	1	Night	Dry	Not Coded
272	0.000	02/28/15	Sun	1500	Left-Turn	0	0	1	Day	Wet	Not Coded
273	0.000	02/28/15	Sun	1848	Right-Turn	0	0	1	Night	Wet	Not Coded
274	0.000	02/28/15	Sun	1235	Sideswipe	0	0	1	Day	Dry	Not Coded
275	0.000	02/28/15	Sun	1350	Struck by Falling/Shifting Cargo	0	0	1	Day	Dry	Not Coded
276	0.000	03/01/15	Mon	2120	Sideswipe	0	0	1	Night	Dry	Not Coded

State of Florida Department of Transportation
CRASH SUMMARY

SECTION: Ludlam Trail Corridor f — STATE ROUTE: #N/A
ROADWAY LIMITS: 0 — M.P. 0.000 TO 0.000 — ENGINEER: 0
STUDY PERIOD: FROM 1/ 2015 TO 12/ 2015 — COUNTY: Miami-Dade

No.	MILE POST	DATE	DAY	TIME	CRASH TYPE	FATAL	INJURIES	PROP DAM	DAY / NIGHT	WET / DRY	CONTRIBUTING CAUSE (VEHICLE ONLY)
277	0.000	03/01/15	Mon	0215	Rear-End	0	0	1	Night	Dry	Not Coded
278	0.000	03/01/15	Mon	2200	Angle	0	0	1	Night	Dry	Not Coded
279	0.000	03/02/15	Tue	0755	Rear-End	0	0	1	Day	Dry	Not Coded
280	0.000	03/02/15	Tue	0850	Sideswipe	0	0	1	Day	Dry	Not Coded
281	0.000	03/02/15	Tue	1805	Rear-End	0	0	1	Night	Dry	Not Coded
282	0.000	03/03/15	Wed	1441	Rear-End	0	0	1	Day	Dry	Not Coded
283	0.000	03/03/15	Wed	0933	Rear-End	0	1	0	Day	Dry	Not Coded
284	0.000	03/03/15	Wed	1210	Rear-End	0	0	1	Day	Dry	Not Coded
285	0.000	03/03/15	Wed	2215	Rear-End	0	0	1	Night	Dry	Not Coded
286	0.000	03/03/15	Wed	1835	Not Coded	0	0	1	Night	Dry	Not Coded
287	0.000	03/03/15	Wed	0730	Rear-End	0	0	1	Day	Dry	Not Coded
288	0.000	03/03/15	Wed	0749	Angle	0	0	1	Day	Dry	Not Coded
289	0.000	03/03/15	Wed	2110	Rear-End	0	0	1	Night	Dry	Not Coded
290	0.000	03/04/15	Thu	0915	Sideswipe	0	1	0	Day	Dry	Not Coded
291	0.000	03/04/15	Thu	1040	Rear-End	0	0	1	Day	Dry	Not Coded
292	0.000	03/05/15	Fri	1940	Sideswipe	0	0	1	Night	Dry	Not Coded
293	0.000	03/05/15	Fri	1319	Backed Into	0	0	1	Day	Dry	Not Coded
294	0.000	03/05/15	Fri	0902	Parked Motor Vehicle	0	0	1	Day	Dry	Not Coded
295	0.000	03/05/15	Fri	1431	Rear-End	0	0	1	Day	Dry	Not Coded
296	0.000	03/05/15	Fri	1800	Left-Turn	0	0	1	Day	Dry	Not Coded
297	0.000	03/06/15	Sat	2135	Rear-End	0	1	0	Night	Dry	Not Coded
298	0.000	03/06/15	Sat	2015	Rear-End	0	0	1	Night	Dry	Not Coded
299	0.000	03/06/15	Sat	1150	Angle	0	0	1	Day	Dry	Not Coded
300	0.000	03/06/15	Sat	0809	Left-Turn	0	0	1	Day	Dry	Not Coded
301	0.000	03/06/15	Sat	1812	Backed Into	0	0	1	Night	Dry	Not Coded
302	0.000	03/06/15	Sat	0900	Angle	0	0	1	Day	Dry	Not Coded
303	0.000	03/06/15	Sat	1907	Rear-End	0	0	1	Day	Dry	Not Coded
304	0.000	03/06/15	Sat	1445	Rear-End	0	0	1	Day	Dry	Not Coded
305	0.000	03/06/15	Sat	0935	Angle	0	0	1	Day	Dry	Not Coded
306	0.000	03/06/15	Sat	2055	Right-Turn	0	0	1	Night	Dry	Not Coded
307	0.000	03/06/15	Sat	1915	Backed Into	0	1	0	Night	Dry	Not Coded
308	0.000	03/07/15	Sun	0905	Sideswipe	0	0	1	Day	Dry	Not Coded
309	0.000	03/07/15	Sun	1036	Not Coded	0	1	0	Day	Dry	Not Coded
310	0.000	03/08/15	Mon	0400	Rear-End	0	0	1	Night	Wet	Not Coded
311	0.000	03/08/15	Mon	0407	Left-Turn	0	0	1	Night	Wet	Not Coded
312	0.000	03/08/15	Mon	0420	Rear-End	0	0	1	Night	Wet	Not Coded
313	0.000	03/10/15	Wed	0907	Left-Turn	0	1	0	Day	Dry	Not Coded
314	0.000	03/10/15	Wed	0715	Rear-End	0	0	1	Night	Dry	Not Coded
315	0.000	03/11/15	Thu	1644	Sideswipe	0	0	1	Day	Dry	Not Coded
316	0.000	03/11/15	Thu	1837	Left-Turn	0	1	0	Night	Dry	Not Coded
317	0.000	03/11/15	Thu	1907	Sideswipe	0	0	1	Day	Dry	Not Coded
318	0.000	03/11/15	Thu	1910	Rear-End	0	0	1	Day	Dry	Not Coded
319	0.000	03/11/15	Thu	1622	Sideswipe	0	1	0	Day	Dry	Not Coded
320	0.000	03/11/15	Thu	1513	Rear-End	0	0	1	Day	Dry	Not Coded
321	0.000	03/11/15	Thu	1640	Rear-End	0	0	1	Day	Dry	Not Coded
322	0.000	03/11/15	Thu	1245	Rear-End	0	0	1	Day	Dry	Not Coded
323	0.000	03/11/15	Thu	0905	Rear-End	0	0	1	Day	Dry	Not Coded
324	0.000	03/11/15	Thu	1050	Rear-End	0	0	1	Day	Dry	Not Coded
325	0.000	03/11/15	Thu	1228	Angle	0	0	1	Day	Dry	Not Coded
326	0.000	03/12/15	Fri	0939	Rear-End	0	1	0	Day	Dry	Not Coded
327	0.000	03/12/15	Fri	1539	Rear-End	0	0	1	Day	Dry	Not Coded
328	0.000	03/12/15	Fri	1600	Angle	0	1	0	Day	Dry	Not Coded
329	0.000	03/12/15	Fri	2140	Rear-End	0	0	1	Night	Dry	Not Coded
330	0.000	03/12/15	Fri	1543	Pedalcycle	0	0	1	Day	Dry	Not Coded
331	0.000	03/12/15	Fri	1200	Left-Turn	0	0	1	Day	Dry	Not Coded
332	0.000	03/12/15	Fri	0720	Sideswipe	0	0	1	Day	Dry	Not Coded
333	0.000	03/12/15	Fri	1847	Backed Into	0	0	1	Night	Dry	Not Coded
334	0.000	03/13/15	Sat	1745	Left-Turn	0	0	1	Day	Dry	Not Coded
335	0.000	03/13/15	Sat	2320	Sideswipe	0	0	1	Night	Dry	Not Coded
336	0.000	03/13/15	Sat	1837	Angle	0	0	1	Day	Dry	Not Coded
337	0.000	03/13/15	Sat	1215	Angle	0	0	1	Day	Dry	Not Coded
338	0.000	03/14/15	Sun	1305	Angle	0	1	0	Day	Dry	Not Coded
339	0.000	03/14/15	Sun	2045	Sideswipe	0	0	1	Night	Dry	Not Coded
340	0.000	03/14/15	Sun	0905	Rear-End	0	0	1	Day	Dry	Not Coded
341	0.000	03/14/15	Sun	1740	Sideswipe	0	0	1	Day	Dry	Not Coded
342	0.000	03/14/15	Sun	0226	Angle	0	0	1	Night	Dry	Not Coded
343	0.000	03/14/15	Sun	2220	Left-Turn	0	0	1	Night	Dry	Not Coded
344	0.000	03/16/15	Tue	1113	Rear-End	0	0	1	Day	Dry	Not Coded
345	0.000	03/16/15	Tue	0854	Rear-End	0	0	1	Day	Dry	Not Coded

State of Florida Department of Transportation
CRASH SUMMARY

SECTION: Ludlam Trail Corridor f — STATE ROUTE: #N/A
ROADWAY LIMITS: 0 — M.P. 0.000 TO 0.000 — ENGINEER: 0
STUDY PERIOD: FROM 1/ 2015 TO 12/ 2015 — COUNTY: Miami-Dade

No.	MILE POST	DATE	DAY	TIME	CRASH TYPE	FATAL	INJURIES	PROP DAM	DAY / NIGHT	WET / DRY	CONTRIBUTING CAUSE (VEHICLE ONLY)
346	0.000	03/16/15	Tue	2130	Rear-End	0	0	1	Night	Dry	Not Coded
347	0.000	03/16/15	Tue	0715	Curb	0	0	1	Day	Dry	Not Coded
348	0.000	03/16/15	Tue	2056	Angle	0	1	0	Night	Dry	Not Coded
349	0.000	03/17/15	Wed	1400	Angle	0	0	1	Day	Dry	Not Coded
350	0.000	03/17/15	Wed	0903	Left-Turn	0	0	1	Day	Dry	Not Coded
351	0.000	03/17/15	Wed	1843	Rear-End	0	0	1	Day	Dry	Not Coded
352	0.000	03/18/15	Thu	1544	Rear-End	0	0	1	Day	Dry	Not Coded
353	0.000	03/18/15	Thu	1435	Rear-End	0	0	1	Day	Dry	Not Coded
354	0.000	03/18/15	Thu	2310	Parked Motor Vehicle	0	0	1	Night	Dry	Not Coded
355	0.000	03/19/15	Fri	1610	Overturn/Rollover	0	0	1	Day	Dry	Not Coded
356	0.000	03/19/15	Fri	0957	Sideswipe	0	0	1	Day	Dry	Not Coded
357	0.000	03/19/15	Fri	0718	Sideswipe	0	1	0	Day	Dry	Not Coded
358	0.000	03/19/15	Fri	0435	Parked Motor Vehicle	0	0	1	Day	Dry	Not Coded
359	0.000	03/20/15	Sat	2125	Backed Into	0	0	1	Day	Dry	Not Coded
360	0.000	03/20/15	Sat	2242	Not Coded	0	0	1	Night	Dry	Not Coded
361	0.000	03/21/15	Sun	1755	Angle	0	0	1	Day	Dry	Not Coded
362	0.000	03/21/15	Sun	0229	Angle	0	1	0	Night	Dry	Not Coded
363	0.000	03/21/15	Sun	1330	Left-Turn	0	0	1	Day	Dry	Not Coded
364	0.000	03/21/15	Sun	0650	Rear-End	0	1	0	Night	Dry	Not Coded
365	0.000	03/22/15	Mon	1338	Angle	0	1	0	Day	Dry	Not Coded
366	0.000	03/22/15	Mon	1550	Fell/Jumped from Motor Vehicle	0	0	1	Day	Dry	Not Coded
367	0.000	03/23/15	Tue	2140	Sideswipe	0	1	0	Night	Dry	Not Coded
368	0.000	03/23/15	Tue	1425	Backed Into	0	0	1	Day	Dry	Not Coded
369	0.000	03/23/15	Tue	1717	Rear-End	0	0	1	Day	Dry	Not Coded
370	0.000	03/24/15	Wed	1055	Rear-End	0	0	1	Day	Dry	Not Coded
371	0.000	03/24/15	Wed	1355	Sideswipe	0	0	1	Day	Dry	Not Coded
372	0.000	03/24/15	Wed	1130	Rear-End	0	1	0	Day	Dry	Not Coded
373	0.000	03/24/15	Wed	1535	Rear-End	0	0	1	Day	Dry	Not Coded
374	0.000	03/24/15	Wed	1310	Rear-End	0	0	1	Day	Dry	Not Coded
375	0.000	03/24/15	Wed	1755	Left-Turn	0	0	1	Day	Dry	Not Coded
376	0.000	03/25/15	Thu	1429	Rear-End	0	0	1	Day	Dry	Not Coded
377	0.000	03/25/15	Thu	0720	Rear-End	0	0	1	Day	Dry	Not Coded
378	0.000	03/25/15	Thu	1522	Left-Turn	0	0	1	Day	Dry	Not Coded
379	0.000	03/25/15	Thu	0902	Angle	0	0	1	Day	Dry	Not Coded
380	0.000	03/25/15	Thu	1430	Backed Into	0	0	1	Day	Dry	Not Coded
381	0.000	03/25/15	Thu	1000	Utility Pole/Light Support	0	0	1	Day	Dry	Not Coded
382	0.000	03/25/15	Thu	1132	Angle	0	0	1	Day	Dry	Not Coded
383	0.000	03/26/15	Fri	0430	Angle	0	1	0	Night	Dry	Not Coded
384	0.000	03/26/15	Fri	1508	Sideswipe	0	0	1	Day	Dry	Not Coded
385	0.000	03/26/15	Fri	1600	Sideswipe	0	1	0	Day	Dry	Not Coded
386	0.000	03/27/15	Sat	2030	Angle	0	0	1	Night	Wet	Not Coded
387	0.000	03/27/15	Sat	2214	Angle	0	0	1	Day	Wet	Not Coded
388	0.000	03/27/15	Sat	1239	Right-Turn	0	0	1	Day	Dry	Not Coded
389	0.000	03/27/15	Sat	0100	Sideswipe	0	0	1	Day	Dry	Not Coded
390	0.000	03/27/15	Sat	1213	Angle	0	0	1	Day	Dry	Not Coded
391	0.000	03/27/15	Sat	1640	Angle	0	0	1	Day	Dry	Not Coded
392	0.000	03/27/15	Sat	1950	Left-Turn	0	0	1	Night	Wet	Not Coded
393	0.000	03/28/15	Sun	1400	Rear-End	0	0	1	Day	Dry	Not Coded
394	0.000	03/28/15	Sun	1121	Angle	0	0	1	Day	Dry	Not Coded
395	0.000	03/28/15	Sun	1845	Rear-End	0	0	1	Day	Dry	Not Coded
396	0.000	03/28/15	Sun	1850	Rear-End	0	0	1	Day	Dry	Not Coded
397	0.000	03/28/15	Sun	1405	Angle	0	1	0	Day	Dry	Not Coded
398	0.000	03/29/15	Mon	1019	Rear-End	0	1	0	Day	Dry	Not Coded
399	0.000	03/29/15	Mon	1118	Rear-End	0	0	1	Day	Dry	Not Coded
400	0.000	03/29/15	Mon	1829	Angle	0	0	1	Day	Dry	Not Coded
401	0.000	03/29/15	Mon	0410	Rear-End	0	0	1	Night	Dry	Not Coded
402	0.000	03/29/15	Mon	1907	Not Coded	0	0	1	Day	Dry	Not Coded
403	0.000	03/30/15	Tue	1617	Angle	0	1	0	Day	Dry	Not Coded
404	0.000	03/31/15	Wed	0755	Sideswipe	0	0	1	Day	Dry	Not Coded
405	0.000	03/31/15	Wed	1225	Rear-End	0	0	1	Day	Dry	Not Coded
406	0.000	03/31/15	Wed	1641	Rear-End	0	0	1	Day	Dry	Not Coded
407	0.000	03/31/15	Wed	1459	Sideswipe	0	0	1	Day	Dry	Not Coded
408	0.000	03/31/15	Wed	1852	Rear-End	0	0	1	Day	Dry	Not Coded
409	0.000	04/01/15	Thu	1604	Rear-End	0	0	1	Day	Dry	Not Coded
410	0.000	04/01/15	Thu	2110	Rear-End	0	0	1	Night	Dry	Not Coded
411	0.000	04/01/15	Thu	1851	Rear-End	0	0	1	Day	Dry	Not Coded
412	0.000	04/01/15	Thu	1455	Left-Turn	0	0	1	Day	Dry	Not Coded
413	0.000	04/01/15	Thu	0750	Rear-End	0	1	0	Day	Dry	Not Coded
414	0.000	04/01/15	Thu	1740	Left-Turn	0	0	1	Day	Dry	Not Coded

State of Florida Department of Transportation
CRASH SUMMARY

SECTION: Ludlam Trail Corridor f — STATE ROUTE: #N/A
ROADWAY LIMITS: 0 — M.P. 0.000 TO 0.000 — ENGINEER: 0
STUDY PERIOD: FROM 1/ 2015 TO 12/ 2015 — COUNTY: Miami-Dade

No.	MILE POST	DATE	DAY	TIME	CRASH TYPE	FATAL	INJURIES	PROP DAM	DAY / NIGHT	WET / DRY	CONTRIBUTING CAUSE (VEHICLE ONLY)
415	0.000	04/01/15	Thu	1905	Utility Pole/Light Support	0	0	1	Day	Dry	Not Coded
416	0.000	04/02/15	Fri	2142	Utility Pole/Light Support	0	0	1	Night	Dry	Not Coded
417	0.000	04/02/15	Fri	1630	Rear-End	0	0	1	Day	Dry	Not Coded
418	0.000	04/02/15	Fri	1915	Angle	0	0	1	Night	Dry	Not Coded
419	0.000	04/03/15	Sat	1433	Head-On	0	0	1	Day	Dry	Not Coded
420	0.000	04/03/15	Sat	0127	Left-Turn	0	0	1	Night	Dry	Not Coded
421	0.000	04/03/15	Sat	1827	Rear-End	0	1	0	Day	Dry	Not Coded
422	0.000	04/03/15	Sat	2211	Left-Turn	0	0	1	Night	Dry	Not Coded
423	0.000	04/03/15	Sat	1330	Rear-End	0	0	1	Day	Dry	Not Coded
424	0.000	04/04/15	Sun	1320	Rear-End	0	1	0	Day	Dry	Not Coded
425	0.000	04/04/15	Sun	1700	Rear-End	0	0	1	Day	Dry	Not Coded
426	0.000	04/04/15	Sun	0915	Rear-End	0	1	0	Day	Dry	Not Coded
427	0.000	04/05/15	Mon	0540	Sideswipe	0	0	1	Night	Dry	Not Coded
428	0.000	04/05/15	Mon	1407	Angle	0	0	1	Day	Dry	Not Coded
429	0.000	04/05/15	Mon	2042	Rear-End	0	0	1	Night	Dry	Not Coded
430	0.000	04/06/15	Tue	2218	Rear-End	0	0	1	Night	Wet	Not Coded
431	0.000	04/06/15	Tue	1554	Left-Turn	0	0	1	Day	Dry	Not Coded
432	0.000	04/06/15	Tue	1443	Angle	0	0	1	Day	Dry	Not Coded
433	0.000	04/06/15	Tue	0605	Right-Turn	0	0	1	Day	Dry	Not Coded
434	0.000	04/06/15	Tue	1748	Rear-End	0	0	1	Day	Wet	Not Coded
435	0.000	04/07/15	Wed	1328	Left-Turn	0	0	1	Day	Dry	Not Coded
436	0.000	04/07/15	Wed	0825	Rear-End	0	0	1	Day	Dry	Not Coded
437	0.000	04/07/15	Wed	1732	Rear-End	0	1	0	Day	Dry	Not Coded
438	0.000	04/07/15	Wed	1341	Angle	0	0	1	Day	Dry	Not Coded
439	0.000	04/08/15	Thu	1640	Rear-End	0	0	1	Day	Wet	Not Coded
440	0.000	04/08/15	Thu	0950	Rear-End	0	0	1	Day	Dry	Not Coded
441	0.000	04/08/15	Thu	1420	Left-Turn	0	0	1	Day	Dry	Not Coded
442	0.000	04/08/15	Thu	1730	Rear-End	0	0	1	Day	Dry	Not Coded
443	0.000	04/08/15	Thu	1914	Rear-End	0	0	1	Day	Dry	Not Coded
444	0.000	04/08/15	Thu	1744	Left-Turn	0	1	0	Day	Dry	Not Coded
445	0.000	04/08/15	Thu	0923	Rear-End	0	0	1	Day	Dry	Not Coded
446	0.000	04/08/15	Thu	0720	Left-Turn	0	0	1	Day	Dry	Not Coded
447	0.000	04/08/15	Thu	1745	Backed Into	0	0	1	Day	Dry	Not Coded
448	0.000	04/09/15	Fri	1828	Rear-End	0	1	0	Day	Dry	Not Coded
449	0.000	04/09/15	Fri	2110	Angle	0	0	1	Day	Dry	Not Coded
450	0.000	04/09/15	Fri	1443	Angle	0	0	1	Day	Dry	Not Coded
451	0.000	04/09/15	Fri	1735	Sideswipe	0	0	1	Day	Dry	Not Coded
452	0.000	04/09/15	Fri	1840	Sideswipe	0	0	1	Day	Dry	Not Coded
453	0.000	04/09/15	Fri	1910	Rear-End	0	0	1	Day	Dry	Not Coded
454	0.000	04/10/15	Sat	1747	Rear-End	0	0	1	Day	Dry	Not Coded
455	0.000	04/10/15	Sat	0735	Angle	0	0	1	Day	Dry	Not Coded
456	0.000	04/10/15	Sat	0950	Rear-End	0	0	1	Day	Dry	Not Coded
457	0.000	04/10/15	Sat	1340	Backed Into	0	1	0	Day	Dry	Not Coded
458	0.000	04/11/15	Sun	1224	Rear-End	0	1	0	Day	Dry	Not Coded
459	0.000	04/11/15	Sun	1150	Sideswipe	0	1	0	Day	Dry	Not Coded
460	0.000	04/11/15	Sun	1550	Left-Turn	0	0	1	Day	Dry	Not Coded
461	0.000	04/11/15	Sun	0250	Not Coded	0	0	1	Day	Dry	Not Coded
462	0.000	04/11/15	Sun	1210	Rear-End	0	0	1	Day	Dry	Not Coded
463	0.000	04/11/15	Sun	0935	Head-On	0	1	0	Day	Dry	Not Coded
464	0.000	04/11/15	Sun	1445	Rear-End	0	0	1	Day	Dry	Not Coded
465	0.000	04/11/15	Sun	0627	Rear-End	0	0	1	Night	Dry	Not Coded
466	0.000	04/13/15	Tue	1400	Left-Turn	0	0	1	Day	Dry	Not Coded
467	0.000	04/13/15	Tue	2125	Left-Turn	0	0	1	Night	Dry	Not Coded
468	0.000	04/13/15	Tue	1035	Left-Turn	0	1	0	Day	Dry	Not Coded
469	0.000	04/14/15	Wed	1510	Left-Turn	0	0	1	Day	Dry	Not Coded
470	0.000	04/14/15	Wed	1750	Angle	0	0	1	Day	Dry	Not Coded
471	0.000	04/14/15	Wed	1329	Left-Turn	0	0	1	Day	Dry	Not Coded
472	0.000	04/14/15	Wed	1050	Angle	0	1	0	Day	Dry	Not Coded
473	0.000	04/14/15	Wed	0944	Rear-End	0	1	0	Day	Dry	Not Coded
474	0.000	04/15/15	Thu	1830	Left-Turn	0	0	1	Day	Dry	Not Coded
475	0.000	04/15/15	Thu	1810	Angle	0	0	1	Day	Dry	Not Coded
476	0.000	04/15/15	Thu	1523	Sideswipe	0	0	1	Day	Dry	Not Coded
477	0.000	04/15/15	Thu	0808	Angle	0	1	0	Day	Dry	Not Coded
478	0.000	04/15/15	Thu	0900	Left-Turn	0	0	1	Day	Wet	Not Coded
479	0.000	04/15/15	Thu	0936	Rear-End	0	0	1	Day	Wet	Not Coded
480	0.000	04/15/15	Thu	1712	Rear-End	0	0	1	Day	Dry	Not Coded
481	0.000	04/15/15	Thu	1305	Angle	0	0	1	Day	Wet	Not Coded
482	0.000	04/16/15	Fri	1810	Angle	0	0	1	Day	Dry	Not Coded
483	0.000	04/16/15	Fri	0105	Left-Turn	0	0	1	Day	Dry	Not Coded

State of Florida Department of Transportation
CRASH SUMMARY

SECTION: Ludlam Trail Corridor f — STATE ROUTE: #N/A
ROADWAY LIMITS: 0 — M.P. 0.000 TO 0.000 — ENGINEER: 0
STUDY PERIOD: FROM 1/ 2015 TO 12/ 2015 — COUNTY: Miami-Dade

No.	MILE POST	DATE	DAY	TIME	CRASH TYPE	FATAL	INJURIES	PROP DAM	DAY / NIGHT	WET / DRY	CONTRIBUTING CAUSE (VEHICLE ONLY)
484	0.000	04/16/15	Fri	1740	Rear-End	0	0	1	Day	Dry	Not Coded
485	0.000	04/16/15	Fri	1650	Left-Turn	0	0	1	Day	Dry	Not Coded
486	0.000	04/16/15	Fri	1735	Left-Turn	0	0	1	Day	Dry	Not Coded
487	0.000	04/16/15	Fri	1630	Rear-End	0	0	1	Day	Dry	Not Coded
488	0.000	04/16/15	Fri	1543	Sideswipe	0	0	1	Day	Dry	Not Coded
489	0.000	04/17/15	Sat	1425	Rear-End	0	0	1	Day	Dry	Not Coded
490	0.000	04/17/15	Sat	1110	Rear-End	0	1	0	Day	Dry	Not Coded
491	0.000	04/17/15	Sat	1620	Right-Turn	0	0	1	Day	Dry	Not Coded
492	0.000	04/17/15	Sat	1200	Angle	0	0	1	Day	Dry	Not Coded
493	0.000	04/17/15	Sat	1817	Angle	0	0	1	Day	Dry	Not Coded
494	0.000	04/17/15	Sat	2155	Not Coded	0	0	1	Night	Dry	Not Coded
495	0.000	04/17/15	Sat	1100	Angle	0	0	1	Day	Dry	Not Coded
496	0.000	04/17/15	Sat	0850	Rear-End	0	0	1	Day	Dry	Not Coded
497	0.000	04/17/15	Sat	1325	Angle	0	0	1	Day	Dry	Not Coded
498	0.000	04/18/15	Sun	1700	Sideswipe	0	0	1	Day	Dry	Not Coded
499	0.000	04/18/15	Sun	2117	Rear-End	0	0	1	Night	Dry	Not Coded
500	0.000	04/18/15	Sun	0007	Rear-End	0	0	1	Night	Dry	Not Coded
501	0.000	04/18/15	Sun	1309	Rear-End	0	0	1	Day	Dry	Not Coded
502	0.000	04/18/15	Sun	1450	Left-Turn	0	0	1	Day	Dry	Not Coded
503	0.000	04/19/15	Mon	0812	Rear-End	0	0	1	Day	Dry	Not Coded
504	0.000	04/19/15	Mon	2211	Rear-End	0	0	1	Night	Dry	Not Coded
505	0.000	04/19/15	Mon	1323	Sideswipe	0	0	1	Day	Dry	Not Coded
506	0.000	04/20/15	Tue	1430	Sideswipe	0	0	1	Day	Wet	Not Coded
507	0.000	04/20/15	Tue	1159	Rear-End	0	0	1	Day	Wet	Not Coded
508	0.000	04/20/15	Tue	1535	Left-Turn	0	0	1	Day	Dry	Not Coded
509	0.000	04/20/15	Tue	1820	Sideswipe	0	0	1	Day	Dry	Not Coded
510	0.000	04/20/15	Tue	0727	Rear-End	0	0	1	Day	Dry	Not Coded
511	0.000	04/20/15	Tue	1356	Left-Turn	0	0	1	Day	Dry	Not Coded
512	0.000	04/20/15	Tue	1356	Angle	0	0	1	Day	Dry	Not Coded
513	0.000	04/20/15	Tue	1608	Backed Into	0	1	0	Day	Dry	Not Coded
514	0.000	04/20/15	Tue	1221	Angle	0	0	1	Day	Dry	Not Coded
515	0.000	04/21/15	Wed	0948	Rear-End	0	1	0	Day	Wet	Not Coded
516	0.000	04/21/15	Wed	1147	Angle	0	0	1	Day	Dry	Not Coded
517	0.000	04/21/15	Wed	1715	Left-Turn	0	0	1	Day	Wet	Not Coded
518	0.000	04/21/15	Wed	1450	Rear-End	0	0	1	Day	Dry	Not Coded
519	0.000	04/21/15	Wed	0704	Rear-End	0	0	1	Night	Dry	Not Coded
520	0.000	04/21/15	Wed	1433	Angle	0	0	1	Day	Dry	Not Coded
521	0.000	04/21/15	Wed	1824	Rear-End	0	0	1	Day	Dry	Not Coded
522	0.000	04/22/15	Thu	1405	Rear-End	0	0	1	Day	Dry	Not Coded
523	0.000	04/22/15	Thu	1728	Rear-End	0	0	1	Day	Dry	Not Coded
524	0.000	04/22/15	Thu	1830	Rear-End	0	0	1	Day	Dry	Not Coded
525	0.000	04/22/15	Thu	0855	Rear-End	0	0	1	Day	Dry	Not Coded
526	0.000	04/22/15	Thu	1917	Head-On	0	0	1	Night	Dry	Not Coded
527	0.000	04/23/15	Fri	0733	Angle	0	0	1	Day	Dry	Not Coded
528	0.000	04/23/15	Fri	1654	Sideswipe	0	0	1	Day	Dry	Not Coded
529	0.000	04/23/15	Fri	1320	Parked Motor Vehicle	0	0	1	Day	Dry	Not Coded
530	0.000	04/23/15	Fri	1900	Angle	0	0	1	Day	Wet	Not Coded
531	0.000	04/23/15	Fri	1736	Rear-End	0	0	1	Day	Wet	Not Coded
532	0.000	04/23/15	Fri	1420	Angle	0	0	1	Day	Dry	Not Coded
533	0.000	04/23/15	Fri	2135	Left-Turn	0	0	1	Night	Dry	Not Coded
534	0.000	04/24/15	Sat	1310	Parked Motor Vehicle	0	1	0	Day	Dry	Not Coded
535	0.000	04/24/15	Sat	1325	Rear-End	0	0	1	Day	Dry	Not Coded
536	0.000	04/24/15	Sat	1621	Utility Pole/Light Support	0	0	1	Day	Dry	Not Coded
537	0.000	04/24/15	Sat	1217	Rear-End	0	0	1	Day	Dry	Not Coded
538	0.000	04/24/15	Sat	1833	Rear-End	0	0	1	Day	Wet	Not Coded
539	0.000	04/25/15	Sun	1405	Angle	0	0	1	Day	Dry	Not Coded
540	0.000	04/25/15	Sun	1105	Sideswipe	0	0	1	Day	Dry	Not Coded
541	0.000	04/25/15	Sun	1500	Overturn/Rollover	0	0	1	Day	Wet	Not Coded
542	0.000	04/26/15	Mon	1519	Angle	0	0	1	Day	Dry	Not Coded
543	0.000	04/26/15	Mon	1906	Rear-End	0	0	1	Night	Dry	Not Coded
544	0.000	04/27/15	Tue	0845	Right-Turn	0	1	0	Day	Dry	Not Coded
545	0.000	04/27/15	Tue	1400	Sideswipe	0	0	1	Day	Dry	Not Coded
546	0.000	04/27/15	Tue	1448	Angle	0	0	1	Day	Dry	Not Coded
547	0.000	04/28/15	Wed	0927	Left-Turn	0	0	1	Day	Dry	Not Coded
548	0.000	04/28/15	Wed	1734	Left-Turn	0	0	1	Day	Wet	Not Coded
549	0.000	04/28/15	Wed	1743	Rear-End	0	0	1	Day	Wet	Not Coded
550	0.000	04/28/15	Wed	0450	Rear-End	0	1	0	Day	Wet	Not Coded
551	0.000	04/28/15	Wed	1210	Backed Into	0	1	0	Day	Dry	Not Coded
552	0.000	04/28/15	Wed	1834	Rear-End	0	0	1	Day	Wet	Not Coded

State of Florida Department of Transportation
CRASH SUMMARY

SECTION: Ludlam Trail Corridor f — STATE ROUTE: #N/A
ROADWAY LIMITS: 0 — M.P. 0.000 TO 0.000 — ENGINEER: 0
STUDY PERIOD: FROM 1/ 2015 TO 12/ 2015 — COUNTY: Miami-Dade

No.	MILE POST	DATE	DAY	TIME	CRASH TYPE	FATAL	INJURIES	PROP DAM	DAY / NIGHT	WET / DRY	CONTRIBUTING CAUSE (VEHICLE ONLY)
553	0.000	04/29/15	Thu	1350	Rear-End	0	0	1	Day	Wet	Not Coded
554	0.000	04/29/15	Thu	1132	Not Coded	0	0	1	Day	Wet	Not Coded
555	0.000	04/29/15	Thu	0721	Angle	0	1	0	Day	Wet	Not Coded
556	0.000	04/29/15	Thu	1240	Backed Into	0	0	1	Day	Wet	Not Coded
557	0.000	04/29/15	Thu	1613	Angle	0	0	1	Day	Wet	Not Coded
558	0.000	04/29/15	Thu	0906	Sideswipe	0	1	0	Day	Wet	Not Coded
559	0.000	04/30/15	Fri	1646	Rear-End	0	1	0	Day	Dry	Not Coded
560	0.000	04/30/15	Fri	0840	Left-Turn	0	1	0	Day	Dry	Not Coded
561	0.000	05/01/15	Sat	1548	Rear-End	0	0	1	Day	Dry	Not Coded
562	0.000	05/01/15	Sat	0635	Rear-End	0	0	1	Night	Dry	Not Coded
563	0.000	05/02/15	Sun	1605	Rear-End	0	0	1	Day	Dry	Not Coded
564	0.000	05/02/15	Sun	0525	Angle	0	0	1	Night	Dry	Not Coded
565	0.000	05/02/15	Sun	1618	Rear-End	0	0	1	Day	Dry	Not Coded
566	0.000	05/02/15	Sun	1943	Rear-End	0	0	1	Night	Dry	Not Coded
567	0.000	05/02/15	Sun	1030	Left-Turn	0	0	1	Day	Dry	Not Coded
568	0.000	05/03/15	Mon	1415	Rear-End	0	0	1	Day	Dry	Not Coded
569	0.000	05/03/15	Mon	1115	Rear-End	0	0	1	Day	Dry	Not Coded
570	0.000	05/04/15	Tue	1739	Left-Turn	0	0	1	Day	Dry	Not Coded
571	0.000	05/04/15	Tue	2020	Head-On	0	0	1	Night	Dry	Not Coded
572	0.000	05/04/15	Tue	2302	Rear-End	0	0	1	Night	Dry	Not Coded
573	0.000	05/04/15	Tue	1045	Angle	0	0	1	Day	Dry	Not Coded
574	0.000	05/05/15	Wed	1309	Left-Turn	0	0	1	Day	Wet	Not Coded
575	0.000	05/05/15	Wed	0827	Sideswipe	0	0	1	Day	Wet	Not Coded
576	0.000	05/05/15	Wed	0906	Angle	0	0	1	Day	Dry	Not Coded
577	0.000	05/05/15	Wed	1838	Left-Turn	0	0	1	Day	Dry	Not Coded
578	0.000	05/06/15	Thu	1022	Angle	0	0	1	Day	Dry	Not Coded
579	0.000	05/06/15	Thu	1143	Rear-End	0	1	0	Day	Dry	Not Coded
580	0.000	05/07/15	Fri	1855	Not Coded	0	0	1	Day	Wet	Not Coded
581	0.000	05/07/15	Fri	0703	Backed Into	0	0	1	Day	Dry	Not Coded
582	0.000	05/07/15	Fri	1630	Left-Turn	0	0	1	Day	Dry	Not Coded
583	0.000	05/07/15	Fri	1624	Left-Turn	0	0	1	Unknown	Other	Not Coded
584	0.000	05/07/15	Fri	0821	Sideswipe	0	0	1	Day	Dry	Not Coded
585	0.000	05/07/15	Fri	1056	Angle	0	0	1	Day	Dry	Not Coded
586	0.000	05/08/15	Sat	1600	Rear-End	0	0	1	Day	Dry	Not Coded
587	0.000	05/08/15	Sat	1458	Sideswipe	0	0	1	Day	Dry	Not Coded
588	0.000	05/08/15	Sat	1730	Overturn/Rollover	0	1	0	Day	Dry	Not Coded
589	0.000	05/08/15	Sat	1310	Rear-End	0	0	1	Day	Dry	Not Coded
590	0.000	05/08/15	Sat	1031	Rear-End	0	0	1	Day	Dry	Not Coded
591	0.000	05/08/15	Sat	1155	Rear-End	0	0	1	Day	Dry	Not Coded
592	0.000	05/08/15	Sat	1330	Left-Turn	0	0	1	Day	Dry	Not Coded
593	0.000	05/08/15	Sat	1102	Sideswipe	0	0	1	Day	Dry	Not Coded
594	0.000	05/09/15	Sun	1304	Backed Into	0	0	1	Day	Dry	Not Coded
595	0.000	05/09/15	Sun	1322	Rear-End	0	0	1	Day	Dry	Not Coded
596	0.000	05/11/15	Tue	1738	Angle	0	0	1	Day	Dry	Not Coded
597	0.000	05/11/15	Tue	1747	Head-On	0	0	1	Day	Dry	Not Coded
598	0.000	05/11/15	Tue	1040	Sideswipe	0	0	1	Day	Dry	Not Coded
599	0.000	05/11/15	Tue	2105	Left-Turn	0	0	1	Night	Wet	Not Coded
600	0.000	05/12/15	Wed	1815	Left-Turn	0	0	1	Day	Dry	Not Coded
601	0.000	05/12/15	Wed	1616	Left-Turn	0	0	1	Day	Dry	Not Coded
602	0.000	05/12/15	Wed	1826	Angle	0	0	1	Day	Dry	Not Coded
603	0.000	05/12/15	Wed	1900	Rear-End	0	0	1	Day	Dry	Not Coded
604	0.000	05/12/15	Wed	1300	Rear-End	0	0	1	Day	Dry	Not Coded
605	0.000	05/12/15	Wed	1331	Rear-End	0	0	1	Day	Dry	Not Coded
606	0.000	05/12/15	Wed	1310	Right-Turn	0	0	1	Day	Dry	Not Coded
607	0.000	05/12/15	Wed	1727	Rear-End	0	0	1	Day	Dry	Not Coded
608	0.000	05/12/15	Wed	0730	Left-Turn	0	0	1	Day	Dry	Not Coded
609	0.000	05/13/15	Thu	1741	Angle	0	1	0	Day	Dry	Not Coded
610	0.000	05/13/15	Thu	1610	Rear-End	0	0	1	Day	Dry	Not Coded
611	0.000	05/13/15	Thu	1530	Rear-End	0	0	1	Day	Dry	Not Coded
612	0.000	05/13/15	Thu	1520	Angle	0	0	1	Day	Dry	Not Coded
613	0.000	05/13/15	Thu	1009	Angle	0	0	1	Day	Dry	Not Coded
614	0.000	05/14/15	Fri	1755	Left-Turn	0	0	1	Day	Dry	Not Coded
615	0.000	05/14/15	Fri	1935	Left-Turn	0	0	1	Night	Dry	Not Coded
616	0.000	05/14/15	Fri	1915	Right-Turn	0	0	1	Day	Dry	Not Coded
617	0.000	05/14/15	Fri	1418	Left-Turn	0	0	1	Day	Dry	Not Coded
618	0.000	05/14/15	Fri	1750	Rear-End	0	0	1	Day	Dry	Not Coded
619	0.000	05/14/15	Fri	1911	Rear-End	0	0	1	Day	Dry	Not Coded
620	0.000	05/15/15	Sat	0735	Rear-End	0	0	1	Day	Dry	Not Coded
621	0.000	05/15/15	Sat	1905	Left-Turn	0	0	1	Day	Dry	Not Coded

State of Florida Department of Transportation
CRASH SUMMARY

SECTION: Ludlam Trail Corridor f — STATE ROUTE: #N/A
ROADWAY LIMITS: 0 — M.P. 0.000 TO 0.000 — ENGINEER: 0
STUDY PERIOD: FROM 1/ 2015 TO 12/ 2015 — COUNTY: Miami-Dade

No.	MILE POST	DATE	DAY	TIME	CRASH TYPE	FATAL	INJURIES	PROP DAM	DAY / NIGHT	WET / DRY	CONTRIBUTING CAUSE (VEHICLE ONLY)
622	0.000	05/15/15	Sat	1700	Rear-End	0	0	1	Day	Dry	Not Coded
623	0.000	05/15/15	Sat	1510	Angle	0	0	1	Day	Dry	Not Coded
624	0.000	05/15/15	Sat	0751	Head-On	0	0	1	Day	Dry	Not Coded
625	0.000	05/15/15	Sat	2050	Rear-End	0	0	1	Night	Dry	Not Coded
626	0.000	05/16/15	Sun	2205	Left-Turn	0	0	1	Night	Dry	Not Coded
627	0.000	05/16/15	Sun	1620	Rear-End	0	0	1	Day	Dry	Not Coded
628	0.000	05/16/15	Sun	2147	Angle	0	0	1	Night	Dry	Not Coded
629	0.000	05/17/15	Mon	1909	Not Coded	0	0	1	Day	Dry	Not Coded
630	0.000	05/17/15	Mon	1659	Angle	0	0	1	Day	Dry	Not Coded
631	0.000	05/18/15	Tue	1110	Left-Turn	0	1	0	Day	Dry	Not Coded
632	0.000	05/18/15	Tue	1631	Rear-End	0	0	1	Day	Dry	Not Coded
633	0.000	05/18/15	Tue	0923	Angle	0	0	1	Day	Dry	Not Coded
634	0.000	05/18/15	Tue	1220	Angle	0	0	1	Day	Dry	Not Coded
635	0.000	05/18/15	Tue	1450	Parked Motor Vehicle	0	1	0	Day	Dry	Not Coded
636	0.000	05/18/15	Tue	1547	Backed Into	0	0	1	Day	Dry	Not Coded
637	0.000	05/20/15	Thu	1050	Rear-End	0	0	1	Day	Dry	Not Coded
638	0.000	05/20/15	Thu	1750	Left-Turn	0	0	1	Day	Dry	Not Coded
639	0.000	05/20/15	Thu	1730	Rear-End	0	0	1	Day	Dry	Not Coded
640	0.000	05/20/15	Thu	0730	Angle	0	0	1	Day	Dry	Not Coded
641	0.000	05/20/15	Thu	1415	Rear-End	0	0	1	Day	Dry	Not Coded
642	0.000	05/20/15	Thu	0740	Rear-End	0	0	1	Day	Dry	Not Coded
643	0.000	05/21/15	Fri	0834	Rear-End	0	1	0	Day	Dry	Not Coded
644	0.000	05/22/15	Sat	1700	Rear-End	0	0	1	Day	Dry	Not Coded
645	0.000	05/22/15	Sat	2259	Angle	0	0	1	Night	Dry	Not Coded
646	0.000	05/22/15	Sat	1315	Angle	0	1	0	Day	Dry	Not Coded
647	0.000	05/23/15	Sun	1735	Rear-End	0	0	1	Day	Dry	Not Coded
648	0.000	05/23/15	Sun	1820	Rear-End	0	0	1	Day	Dry	Not Coded
649	0.000	05/24/15	Mon	0740	Rear-End	0	0	1	Day	Dry	Not Coded
650	0.000	05/24/15	Mon	2007	Angle	0	0	1	Night	Dry	Not Coded
651	0.000	05/25/15	Tue	1120	Left-Turn	0	0	1	Day	Dry	Not Coded
652	0.000	05/25/15	Tue	2221	Rear-End	0	0	1	Night	Dry	Not Coded
653	0.000	05/25/15	Tue	0324	Left-Turn	0	0	1	Day	Dry	Not Coded
654	0.000	05/26/15	Wed	0920	Rear-End	0	1	0	Day	Dry	Not Coded
655	0.000	05/26/15	Wed	1903	Sideswipe	0	0	1	Night	Dry	Not Coded
656	0.000	05/26/15	Wed	1535	Angle	0	0	1	Day	Dry	Not Coded
657	0.000	05/26/15	Wed	1445	Left-Turn	0	0	1	Day	Dry	Not Coded
658	0.000	05/26/15	Wed	2115	Sideswipe	0	0	1	Night	Dry	Not Coded
659	0.000	05/27/15	Thu	0941	Rear-End	0	0	1	Day	Dry	Not Coded
660	0.000	05/27/15	Thu	1243	Angle	1	0	0	Day	Dry	Not Coded
661	0.000	05/27/15	Thu	0949	Utility Pole/Light Support	0	0	1	Day	Dry	Not Coded
662	0.000	05/27/15	Thu	2000	Parked Motor Vehicle	0	0	1	Night	Dry	Not Coded
663	0.000	05/28/15	Fri	1820	Left-Turn	0	0	1	Day	Dry	Not Coded
664	0.000	05/28/15	Fri	1330	Left-Turn	0	0	1	Day	Dry	Not Coded
665	0.000	05/28/15	Fri	1136	Rear-End	0	0	1	Day	Dry	Not Coded
666	0.000	05/28/15	Fri	1713	Angle	0	1	0	Day	Dry	Not Coded
667	0.000	05/28/15	Fri	1315	Backed Into	0	1	0	Day	Dry	Not Coded
668	0.000	05/29/15	Sat	1601	Rear-End	0	0	1	Day	Dry	Not Coded
669	0.000	05/29/15	Sat	1420	Rear-End	0	0	1	Day	Dry	Not Coded
670	0.000	05/29/15	Sat	1645	Sideswipe	0	0	1	Day	Dry	Not Coded
671	0.000	05/29/15	Sat	0808	Left-Turn	0	0	1	Day	Dry	Not Coded
672	0.000	05/29/15	Sat	0845	Left-Turn	0	0	1	Day	Dry	Not Coded
673	0.000	05/30/15	Sun	2302	Sideswipe	0	0	1	Night	Dry	Not Coded
674	0.000	05/31/15	Mon	2130	Angle	0	0	1	Night	Dry	Not Coded
675	0.000	05/31/15	Mon	0100	Pedestrian	0	0	1	Night	Dry	Not Coded
676	0.000	06/01/15	Tue	0700	Left-Turn	0	0	1	Day	Dry	Not Coded
677	0.000	06/01/15	Tue	1124	Overturn/Rollover	0	1	0	Day	Dry	Not Coded
678	0.000	06/01/15	Tue	1500	Sideswipe	0	0	1	Day	Dry	Not Coded
679	0.000	06/01/15	Tue	0950	Backed Into	0	0	1	Day	Dry	Not Coded
680	0.000	06/01/15	Tue	0900	Sideswipe	0	0	1	Day	Dry	Not Coded
681	0.000	06/02/15	Wed	0935	Left-Turn	0	0	1	Day	Dry	Not Coded
682	0.000	06/02/15	Wed	1520	Left-Turn	0	0	1	Day	Dry	Not Coded
683	0.000	06/02/15	Wed	1612	Backed Into	0	0	1	Day	Dry	Not Coded
684	0.000	06/03/15	Thu	1336	Sideswipe	0	0	1	Day	Dry	Not Coded
685	0.000	06/03/15	Thu	1800	Rear-End	0	0	1	Day	Dry	Not Coded
686	0.000	06/03/15	Thu	1120	Rear-End	0	0	1	Day	Dry	Not Coded
687	0.000	06/03/15	Thu	1813	Head-On	0	0	1	Day	Dry	Not Coded
688	0.000	06/03/15	Thu	1430	Rear-End	0	0	1	Day	Dry	Not Coded
689	0.000	06/03/15	Thu	1930	Sideswipe	0	0	1	Day	Dry	Not Coded
690	0.000	06/03/15	Thu	1032	Angle	0	0	1	Day	Dry	Not Coded

State of Florida Department of Transportation
CRASH SUMMARY

SECTION: Ludlam Trail Corridor f | STATE ROUTE: #N/A
ROADWAY LIMITS: 0 | M.P. 0.000 TO 0.000 | ENGINEER: 0
STUDY PERIOD: FROM 1/ 2015 TO 12/ 2015 | COUNTY: Miami-Dade

No.	MILE POST	DATE	DAY	TIME	CRASH TYPE	FATAL	INJURIES	PROP DAM	DAY / NIGHT	WET / DRY	CONTRIBUTING CAUSE (VEHICLE ONLY)
691	0.000	06/03/15	Thu	1410	Left-Turn	0	0	1	Day	Dry	Not Coded
692	0.000	06/04/15	Fri	1530	Parked Motor Vehicle	0	0	1	Day	Wet	Not Coded
693	0.000	06/04/15	Fri	0730	Rear-End	0	0	1	Day	Dry	Not Coded
694	0.000	06/04/15	Fri	1243	Rear-End	0	0	1	Day	Dry	Not Coded
695	0.000	06/04/15	Fri	0455	Sideswipe	0	1	0	Night	Wet	Not Coded
696	0.000	06/04/15	Fri	0832	Sideswipe	0	0	1	Day	Dry	Not Coded
697	0.000	06/04/15	Fri	1315	Angle	0	0	1	Day	Dry	Not Coded
698	0.000	06/04/15	Fri	1750	Sideswipe	0	0	1	Day	Dry	Not Coded
699	0.000	06/05/15	Sat	1742	Angle	0	0	1	Day	Dry	Not Coded
700	0.000	06/05/15	Sat	0545	Rear-End	0	0	1	Night	Dry	Not Coded
701	0.000	06/05/15	Sat	1430	Backed Into	0	0	1	Day	Dry	Not Coded
702	0.000	06/05/15	Sat	1025	Rear-End	0	0	1	Day	Dry	Not Coded
703	0.000	06/05/15	Sat	1600	Rear-End	0	0	1	Day	Dry	Not Coded
704	0.000	06/05/15	Sat	2040	Angle	0	1	0	Day	Dry	Not Coded
705	0.000	06/06/15	Sun	2051	Left-Turn	0	1	0	Night	Wet	Not Coded
706	0.000	06/06/15	Sun	1230	Angle	0	0	1	Day	Dry	Not Coded
707	0.000	06/07/15	Mon	1322	Angle	0	0	1	Day	Dry	Not Coded
708	0.000	06/07/15	Mon	1014	Left-Turn	0	0	1	Day	Dry	Not Coded
709	0.000	06/07/15	Mon	0020	Angle	0	1	0	Night	Wet	Not Coded
710	0.000	06/07/15	Mon	1145	Left-Turn	0	0	1	Day	Dry	Not Coded
711	0.000	06/07/15	Mon	1525	Rear-End	0	0	1	Day	Dry	Not Coded
712	0.000	06/07/15	Mon	1012	Sideswipe	0	1	0	Day	Dry	Not Coded
713	0.000	06/08/15	Tue	2340	Sideswipe	0	0	1	Night	Dry	Not Coded
714	0.000	06/08/15	Tue	2130	Angle	0	0	1	Night	Dry	Not Coded
715	0.000	06/09/15	Wed	0030	Rear-End	0	1	0	Night	Wet	Not Coded
716	0.000	06/09/15	Wed	0031	Rear-End	0	1	0	Night	Wet	Not Coded
717	0.000	06/09/15	Wed	0725	Sideswipe	0	0	1	Day	Dry	Not Coded
718	0.000	06/09/15	Wed	2040	Rear-End	0	0	1	Night	Wet	Not Coded
719	0.000	06/09/15	Wed	1615	Rear-End	0	0	1	Day	Wet	Not Coded
720	0.000	06/09/15	Wed	0810	Rear-End	0	0	1	Day	Dry	Not Coded
721	0.000	06/09/15	Wed	1352	Rear-End	0	0	1	Day	Wet	Not Coded
722	0.000	06/09/15	Wed	0725	Rear-End	0	0	1	Day	Dry	Not Coded
723	0.000	06/09/15	Wed	1543	Angle	0	0	1	Day	Wet	Not Coded
724	0.000	06/10/15	Thu	0815	Right-Turn	0	0	1	Day	Dry	Not Coded
725	0.000	06/10/15	Thu	1540	Sideswipe	0	1	0	Day	Dry	Not Coded
726	0.000	06/10/15	Thu	1615	Sideswipe	0	0	1	Day	Dry	Not Coded
727	0.000	06/10/15	Thu	1120	Rear-End	0	0	1	Day	Dry	Not Coded
728	0.000	06/10/15	Thu	1834	Left-Turn	0	0	1	Day	Dry	Not Coded
729	0.000	06/11/15	Fri	1701	Not Coded	0	0	1	Day	Dry	Not Coded
730	0.000	06/11/15	Fri	2011	Rear-End	0	0	1	Night	Dry	Not Coded
731	0.000	06/11/15	Fri	1638	Rear-End	0	0	1	Day	Dry	Not Coded
732	0.000	06/11/15	Fri	1804	Angle	0	0	1	Day	Dry	Not Coded
733	0.000	06/11/15	Fri	1540	Rear-End	0	0	1	Day	Dry	Not Coded
734	0.000	06/12/15	Sat	2315	Left-Turn	0	0	1	Night	Dry	Not Coded
735	0.000	06/12/15	Sat	2213	Right-Turn	0	0	1	Night	Dry	Not Coded
736	0.000	06/12/15	Sat	1741	Angle	0	0	1	Day	Dry	Not Coded
737	0.000	06/12/15	Sat	1040	Rear-End	0	0	1	Day	Dry	Not Coded
738	0.000	06/12/15	Sat	1746	Angle	0	0	1	Day	Dry	Not Coded
739	0.000	06/12/15	Sat	1737	Angle	0	0	1	Day	Dry	Not Coded
740	0.000	06/13/15	Sun	2024	Left-Turn	0	0	1	Night	Dry	Not Coded
741	0.000	06/14/15	Mon	1310	Left-Turn	0	0	1	Day	Dry	Not Coded
742	0.000	06/14/15	Mon	1054	Angle	0	0	1	Day	Dry	Not Coded
743	0.000	06/14/15	Mon	0959	Angle	0	0	1	Day	Dry	Not Coded
744	0.000	06/14/15	Mon	1720	Not Coded	0	0	1	Day	Dry	Not Coded
745	0.000	06/15/15	Tue	1529	Concrete Traffic Barrier	0	0	1	Day	Dry	Not Coded
746	0.000	06/15/15	Tue	1035	Left-Turn	0	0	1	Day	Wet	Not Coded
747	0.000	06/15/15	Tue	1922	Rear-End	0	0	1	Night	Dry	Not Coded
748	0.000	06/15/15	Tue	1658	Angle	0	0	1	Day	Dry	Not Coded
749	0.000	06/15/15	Tue	2125	Rear-End	0	0	1	Night	Dry	Not Coded
750	0.000	06/15/15	Tue	1800	Rear-End	0	0	1	Day	Dry	Not Coded
751	0.000	06/16/15	Wed	1805	Left-Turn	0	0	1	Day	Dry	Not Coded
752	0.000	06/16/15	Wed	1820	Rear-End	0	0	1	Day	Dry	Not Coded
753	0.000	06/16/15	Wed	1620	Angle	0	0	1	Day	Dry	Not Coded
754	0.000	06/16/15	Wed	0945	Left-Turn	0	0	1	Day	Dry	Not Coded
755	0.000	06/16/15	Wed	1617	Not Coded	0	0	1	Day	Dry	Not Coded
756	0.000	06/16/15	Wed	1929	Rear-End	0	0	1	Day	Dry	Not Coded
757	0.000	06/16/15	Wed	1651	Rear-End	0	0	1	Day	Dry	Not Coded
758	0.000	06/16/15	Wed	1919	Rear-End	0	0	1	Day	Dry	Not Coded
759	0.000	06/16/15	Wed	1400	Rear-End	0	0	1	Day	Dry	Not Coded

State of Florida Department of Transportation
CRASH SUMMARY

SECTION: Ludlam Trail Corridor f — STATE ROUTE: #N/A
ROADWAY LIMITS: 0 — M.P. 0.000 TO 0.000 — ENGINEER: 0
STUDY PERIOD: FROM 1/ 2015 TO 12/ 2015 — COUNTY: Miami-Dade

No.	MILE POST	DATE	DAY	TIME	CRASH TYPE	FATAL	INJURIES	PROP DAM	DAY / NIGHT	WET / DRY	CONTRIBUTING CAUSE (VEHICLE ONLY)
760	0.000	06/16/15	Wed	0931	Rear-End	0	0	1	Day	Dry	Not Coded
761	0.000	06/17/15	Thu	2005	Rear-End	0	0	1	Night	Dry	Not Coded
762	0.000	06/17/15	Thu	1520	Sideswipe	0	0	1	Day	Dry	Not Coded
763	0.000	06/17/15	Thu	0650	Rear-End	0	0	1	Day	Dry	Not Coded
764	0.000	06/17/15	Thu	1455	Rear-End	0	0	1	Day	Dry	Not Coded
765	0.000	06/17/15	Thu	0830	Rear-End	0	0	1	Day	Dry	Not Coded
766	0.000	06/17/15	Thu	0845	Rear-End	0	1	0	Day	Dry	Not Coded
767	0.000	06/17/15	Thu	0742	Rear-End	0	0	1	Day	Dry	Not Coded
768	0.000	06/18/15	Fri	1245	Angle	0	0	1	Day	Dry	Not Coded
769	0.000	06/18/15	Fri	0645	Rear-End	0	1	0	Day	Dry	Not Coded
770	0.000	06/18/15	Fri	1400	Left-Turn	0	1	0	Day	Dry	Not Coded
771	0.000	06/18/15	Fri	0837	Left-Turn	0	0	1	Day	Dry	Not Coded
772	0.000	06/18/15	Fri	1340	Parked Motor Vehicle	0	0	1	Day	Dry	Not Coded
773	0.000	06/18/15	Fri	0820	Not Coded	0	0	1	Day	Dry	Not Coded
774	0.000	06/19/15	Sat	1745	Rear-End	0	1	0	Day	Dry	Not Coded
775	0.000	06/19/15	Sat	1445	Sideswipe	0	0	1	Day	Dry	Not Coded
776	0.000	06/19/15	Sat	1814	Rear-End	0	0	1	Day	Dry	Not Coded
777	0.000	06/19/15	Sat	0823	Sideswipe	0	0	1	Day	Dry	Not Coded
778	0.000	06/19/15	Sat	1245	Rear-End	0	0	1	Day	Dry	Not Coded
779	0.000	06/20/15	Sun	1831	Sideswipe	0	0	1	Day	Dry	Not Coded
780	0.000	06/20/15	Sun	1442	Not Coded	0	1	0	Day	Dry	Not Coded
781	0.000	06/20/15	Sun	1639	Not Coded	0	0	1	Day	Dry	Not Coded
782	0.000	06/21/15	Mon	1110	Backed Into	0	0	1	Day	Dry	Not Coded
783	0.000	06/22/15	Tue	1713	Rear-End	0	0	1	Day	Dry	Not Coded
784	0.000	06/22/15	Tue	1500	Left-Turn	0	0	1	Day	Dry	Not Coded
785	0.000	06/22/15	Tue	2115	Left-Turn	0	1	0	Night	Dry	Not Coded
786	0.000	06/22/15	Tue	1900	Left-Turn	0	0	1	Day	Dry	Not Coded
787	0.000	06/22/15	Tue	1437	Rear-End	0	0	1	Day	Dry	Not Coded
788	0.000	06/22/15	Tue	0757	Rear-End	0	0	1	Day	Dry	Not Coded
789	0.000	06/23/15	Wed	1745	Sideswipe	0	0	1	Day	Dry	Not Coded
790	0.000	06/23/15	Wed	0635	Rear-End	0	0	1	Day	Dry	Not Coded
791	0.000	06/23/15	Wed	1724	Rear-End	0	0	1	Day	Dry	Not Coded
792	0.000	06/23/15	Wed	1745	Rear-End	0	0	1	Day	Dry	Not Coded
793	0.000	06/23/15	Wed	1609	Rear-End	0	0	1	Day	Dry	Not Coded
794	0.000	06/23/15	Wed	0915	Backed Into	0	0	1	Day	Dry	Not Coded
795	0.000	06/23/15	Wed	1430	Rear-End	0	0	1	Day	Dry	Not Coded
796	0.000	06/23/15	Wed	1738	Rear-End	0	0	1	Day	Dry	Not Coded
797	0.000	06/24/15	Thu	1100	Pedestrian	0	0	1	Day	Dry	Not Coded
798	0.000	06/24/15	Thu	1445	Rear-End	0	1	0	Day	Dry	Not Coded
799	0.000	06/24/15	Thu	1715	Rear-End	0	0	1	Day	Dry	Not Coded
800	0.000	06/24/15	Thu	1649	Rear-End	0	0	1	Day	Dry	Not Coded
801	0.000	06/24/15	Thu	1540	Rear-End	0	0	1	Day	Dry	Not Coded
802	0.000	06/24/15	Thu	0801	Rear-End	0	1	0	Day	Dry	Not Coded
803	0.000	06/24/15	Thu	1209	Angle	0	0	1	Day	Dry	Not Coded
804	0.000	06/24/15	Thu	1255	Rear-End	0	0	1	Day	Dry	Not Coded
805	0.000	06/25/15	Fri	0830	Angle	0	0	1	Day	Dry	Not Coded
806	0.000	06/25/15	Fri	1534	Rear-End	0	0	1	Day	Dry	Not Coded
807	0.000	06/25/15	Fri	2035	Rear-End	0	1	0	Night	Dry	Not Coded
808	0.000	06/26/15	Sat	1558	Angle	0	0	1	Day	Dry	Not Coded
809	0.000	06/26/15	Sat	1139	Rear-End	0	0	1	Day	Wet	Not Coded
810	0.000	06/26/15	Sat	1244	Sideswipe	0	0	1	Day	Dry	Not Coded
811	0.000	06/26/15	Sat	2133	Sideswipe	0	0	1	Night	Dry	Not Coded
812	0.000	06/26/15	Sat	1650	Rear-End	0	0	1	Day	Dry	Not Coded
813	0.000	06/26/15	Sat	1557	Rear-End	0	0	1	Day	Wet	Not Coded
814	0.000	06/26/15	Sat	1305	Rear-End	0	0	1	Day	Dry	Not Coded
815	0.000	06/27/15	Sun	0140	Angle	0	0	1	Night	Dry	Not Coded
816	0.000	06/27/15	Sun	1640	Sideswipe	0	0	1	Day	Wet	Not Coded
817	0.000	06/28/15	Mon	2000	Rear-End	0	0	1	Night	Wet	Not Coded
818	0.000	06/29/15	Tue	2030	Right-Turn	0	0	1	Night	Dry	Not Coded
819	0.000	06/29/15	Tue	0830	Sideswipe	0	0	1	Day	Dry	Not Coded
820	0.000	06/29/15	Tue	2345	Rear-End	0	0	1	Night	Dry	Not Coded
821	0.000	06/29/15	Tue	1105	Left-Turn	0	0	1	Day	Dry	Not Coded
822	0.000	06/29/15	Tue	1700	Rear-End	0	0	1	Day	Dry	Not Coded
823	0.000	06/30/15	Wed	1405	Rear-End	0	0	1	Day	Dry	Not Coded
824	0.000	06/30/15	Wed	1820	Head-On	0	0	1	Day	Dry	Not Coded
825	0.000	06/30/15	Wed	1850	Rear-End	0	0	1	Day	Dry	Not Coded
826	0.000	06/30/15	Wed	1110	Angle	0	0	1	Day	Dry	Not Coded
827	0.000	06/30/15	Wed	1717	Angle	0	1	0	Day	Dry	Not Coded
828	0.000	06/30/15	Wed	1328	Backed Into	0	0	1	Day	Dry	Not Coded

State of Florida Department of Transportation
CRASH SUMMARY

SECTION: Ludlam Trail Corridor f — STATE ROUTE: #N/A
ROADWAY LIMITS: 0 — M.P. 0.000 TO 0.000 — ENGINEER: 0
STUDY PERIOD: FROM 1/ 2015 TO 12/ 2015 — COUNTY: Miami-Dade

No.	MILE POST	DATE	DAY	TIME	CRASH TYPE	FATAL	INJURIES	PROP DAM	DAY / NIGHT	WET / DRY	CONTRIBUTING CAUSE (VEHICLE ONLY)
829	0.000	07/01/15	Thu	1651	Angle	0	0	1	Day	Dry	Not Coded
830	0.000	07/01/15	Thu	0859	Left-Turn	0	0	1	Day	Dry	Not Coded
831	0.000	07/01/15	Thu	1728	Rear-End	0	0	1	Day	Dry	Not Coded
832	0.000	07/01/15	Thu	1515	Angle	0	0	1	Day	Dry	Not Coded
833	0.000	07/01/15	Thu	1605	Rear-End	0	1	0	Day	Dry	Not Coded
834	0.000	07/02/15	Fri	2200	Angle	0	0	1	Night	Dry	Not Coded
835	0.000	07/02/15	Fri	1542	Rear-End	0	0	1	Day	Dry	Not Coded
836	0.000	07/02/15	Fri	2117	Utility Pole/Light Support	0	0	1	Night	Dry	Not Coded
837	0.000	07/02/15	Fri	2320	Rear-End	0	0	1	Night	Dry	Not Coded
838	0.000	07/03/15	Sat	1839	Rear-End	0	0	1	Day	Dry	Not Coded
839	0.000	07/03/15	Sat	1459	Rear-End	0	0	1	Day	Dry	Not Coded
840	0.000	07/03/15	Sat	1826	Left-Turn	0	0	1	Day	Wet	Not Coded
841	0.000	07/03/15	Sat	1612	Rear-End	0	0	1	Day	Dry	Not Coded
842	0.000	07/03/15	Sat	1150	Backed Into	0	1	0	Day	Dry	Not Coded
843	0.000	07/03/15	Sat	1244	Rear-End	0	0	1	Day	Dry	Not Coded
844	0.000	07/04/15	Sun	0016	Rear-End	0	1	0	Night	Wet	Not Coded
845	0.000	07/05/15	Mon	0808	Rear-End	0	1	0	Day	Dry	Not Coded
846	0.000	07/06/15	Tue	1911	Rear-End	0	0	1	Day	Dry	Not Coded
847	0.000	07/06/15	Tue	1758	Rear-End	0	0	1	Day	Dry	Not Coded
848	0.000	07/06/15	Tue	1836	Rear-End	0	0	1	Day	Dry	Not Coded
849	0.000	07/06/15	Tue	0510	Left-Turn	0	1	0	Night	Wet	Not Coded
850	0.000	07/06/15	Tue	1205	Left-Turn	0	0	1	Day	Dry	Not Coded
851	0.000	07/07/15	Wed	1657	Rear-End	0	1	0	Day	Dry	Not Coded
852	0.000	07/07/15	Wed	2224	Rear-End	0	0	1	Night	Dry	Not Coded
853	0.000	07/07/15	Wed	1221	Angle	0	0	1	Day	Dry	Not Coded
854	0.000	07/08/15	Thu	1405	Rear-End	0	1	0	Day	Dry	Not Coded
855	0.000	07/08/15	Thu	0850	Backed Into	0	0	1	Day	Dry	Not Coded
856	0.000	07/08/15	Thu	1650	Angle	0	0	1	Day	Dry	Not Coded
857	0.000	07/09/15	Fri	0445	Left-Turn	0	1	0	Night	Dry	Not Coded
858	0.000	07/09/15	Fri	1730	Rear-End	0	0	1	Day	Dry	Not Coded
859	0.000	07/09/15	Fri	2100	Sideswipe	0	0	1	Night	Dry	Not Coded
860	0.000	07/09/15	Fri	1605	Left-Turn	0	0	1	Day	Dry	Not Coded
861	0.000	07/10/15	Sat	1725	Sideswipe	0	0	1	Day	Dry	Not Coded
862	0.000	07/10/15	Sat	1430	Rear-End	0	0	1	Day	Dry	Not Coded
863	0.000	07/10/15	Sat	1523	Sideswipe	0	0	1	Day	Dry	Not Coded
864	0.000	07/10/15	Sat	1938	Sideswipe	0	0	1	Day	Dry	Not Coded
865	0.000	07/11/15	Sun	0830	Rear-End	0	0	1	Day	Dry	Not Coded
866	0.000	07/11/15	Sun	1810	Left-Turn	0	0	1	Day	Dry	Not Coded
867	0.000	07/13/15	Tue	1730	Left-Turn	0	0	1	Day	Dry	Not Coded
868	0.000	07/13/15	Tue	1417	Sideswipe	0	0	1	Day	Dry	Not Coded
869	0.000	07/13/15	Tue	1838	Angle	0	0	1	Day	Dry	Not Coded
870	0.000	07/13/15	Tue	2206	Rear-End	0	0	1	Night	Dry	Not Coded
871	0.000	07/13/15	Tue	2003	Sideswipe	0	0	1	Night	Dry	Not Coded
872	0.000	07/14/15	Wed	0846	Rear-End	0	1	0	Day	Dry	Not Coded
873	0.000	07/14/15	Wed	1800	Rear-End	0	0	1	Day	Dry	Not Coded
874	0.000	07/14/15	Wed	1245	Sideswipe	0	0	1	Day	Dry	Not Coded
875	0.000	07/14/15	Wed	1050	Rear-End	0	0	1	Day	Dry	Not Coded
876	0.000	07/15/15	Thu	0844	Rear-End	0	0	1	Day	Dry	Not Coded
877	0.000	07/15/15	Thu	1349	Rear-End	0	0	1	Day	Wet	Not Coded
878	0.000	07/16/15	Fri	1205	Rear-End	0	0	1	Day	Wet	Not Coded
879	0.000	07/16/15	Fri	1751	Angle	0	0	1	Day	Dry	Not Coded
880	0.000	07/17/15	Sat	1400	Rear-End	0	0	1	Day	Dry	Not Coded
881	0.000	07/17/15	Sat	2021	Rear-End	0	0	1	Night	Dry	Not Coded
882	0.000	07/18/15	Sun	1135	Sideswipe	0	0	1	Day	Dry	Not Coded
883	0.000	07/18/15	Sun	1015	Angle	0	0	1	Day	Dry	Not Coded
884	0.000	07/18/15	Sun	1543	Rear-End	0	0	1	Day	Dry	Not Coded
885	0.000	07/18/15	Sun	1015	Rear-End	0	0	1	Day	Dry	Not Coded
886	0.000	07/20/15	Tue	1255	Rear-End	0	1	0	Day	Dry	Not Coded
887	0.000	07/20/15	Tue	0100	Rear-End	0	0	1	Night	Dry	Not Coded
888	0.000	07/20/15	Tue	0944	Sideswipe	0	0	1	Day	Dry	Not Coded
889	0.000	07/20/15	Tue	1250	Left-Turn	0	0	1	Day	Dry	Not Coded
890	0.000	07/20/15	Tue	1714	Rear-End	0	0	1	Day	Dry	Not Coded
891	0.000	07/21/15	Wed	2000	Rear-End	0	1	0	Night	Wet	Not Coded
892	0.000	07/21/15	Wed	1710	Sideswipe	0	0	1	Day	Wet	Not Coded
893	0.000	07/21/15	Wed	1435	Rear-End	0	0	1	Day	Dry	Not Coded
894	0.000	07/21/15	Wed	1306	Not Coded	0	1	0	Day	Dry	Not Coded
895	0.000	07/21/15	Wed	1718	Sideswipe	0	0	1	Day	Wet	Not Coded
896	0.000	07/21/15	Wed	1800	Angle	0	0	1	Night	Wet	Not Coded
897	0.000	07/21/15	Wed	1940	Right-Turn	0	0	1	Day	Wet	Not Coded

State of Florida Department of Transportation
CRASH SUMMARY

SECTION: Ludlam Trail Corridor f — STATE ROUTE: #N/A
ROADWAY LIMITS: 0 — M.P. 0.000 TO 0.000 — ENGINEER: 0
STUDY PERIOD: FROM 1/ 2015 TO 12/ 2015 — COUNTY: Miami-Dade

No.	MILE POST	DATE	DAY	TIME	CRASH TYPE	FATAL	INJURIES	PROP DAM	DAY / NIGHT	WET / DRY	CONTRIBUTING CAUSE (VEHICLE ONLY)
898	0.000	07/21/15	Wed	1830	Rear-End	0	0	1	Day	Wet	Not Coded
899	0.000	07/21/15	Wed	2314	Left-Turn	0	0	1	Night	Wet	Not Coded
900	0.000	07/21/15	Wed	1714	Head-On	0	0	1	Day	Wet	Not Coded
901	0.000	07/22/15	Thu	2018	Rear-End	0	0	1	Day	Dry	Not Coded
902	0.000	07/23/15	Fri	1445	Sideswipe	0	0	1	Day	Dry	Not Coded
903	0.000	07/23/15	Fri	1430	Rear-End	0	0	1	Day	Dry	Not Coded
904	0.000	07/23/15	Fri	2042	Rear-End	0	0	1	Night	Dry	Not Coded
905	0.000	07/23/15	Fri	1858	Sideswipe	0	0	1	Day	Dry	Not Coded
906	0.000	07/24/15	Sat	1104	Rear-End	0	0	1	Day	Dry	Not Coded
907	0.000	07/24/15	Sat	1650	Sideswipe	0	0	1	Day	Dry	Not Coded
908	0.000	07/24/15	Sat	1140	Sideswipe	0	0	1	Day	Dry	Not Coded
909	0.000	07/25/15	Sun	1613	Sideswipe	0	0	1	Day	Wet	Not Coded
910	0.000	07/25/15	Sun	0727	Rear-End	0	0	1	Day	Dry	Not Coded
911	0.000	07/25/15	Sun	0000	Sideswipe	0	0	1	Night	Dry	Not Coded
912	0.000	07/27/15	Tue	1803	Rear-End	0	1	0	Day	Dry	Not Coded
913	0.000	07/27/15	Tue	1340	Thrown or Falling Object	0	1	0	Day	Dry	Not Coded
914	0.000	07/27/15	Tue	1535	Left-Turn	0	0	1	Day	Dry	Not Coded
915	0.000	07/27/15	Tue	1318	Angle	0	0	1	Day	Dry	Not Coded
916	0.000	07/27/15	Tue	1040	Angle	0	1	0	Day	Dry	Not Coded
917	0.000	07/27/15	Tue	2108	Rear-End	0	1	0	Night	Dry	Not Coded
918	0.000	07/27/15	Tue	2044	Left-Turn	0	0	1	Night	Dry	Not Coded
919	0.000	07/27/15	Tue	2329	Sideswipe	0	0	1	Night	Dry	Not Coded
920	0.000	07/28/15	Wed	1117	Backed Into	0	0	1	Day	Dry	Not Coded
921	0.000	07/28/15	Wed	1310	Rear-End	0	0	1	Day	Dry	Not Coded
922	0.000	07/28/15	Wed	2250	Rear-End	0	0	1	Night	Dry	Not Coded
923	0.000	07/29/15	Thu	1600	Sideswipe	0	0	1	Day	Dry	Not Coded
924	0.000	07/29/15	Thu	1708	Backed Into	0	1	0	Day	Dry	Not Coded
925	0.000	07/29/15	Thu	1619	Sideswipe	0	0	1	Day	Dry	Not Coded
926	0.000	07/29/15	Thu	0802	Backed Into	0	0	1	Day	Dry	Not Coded
927	0.000	07/29/15	Thu	1633	Rear-End	0	0	1	Day	Dry	Not Coded
928	0.000	07/30/15	Fri	0840	Overturn/Rollover	0	0	1	Day	Dry	Not Coded
929	0.000	07/30/15	Fri	1330	Left-Turn	0	0	1	Day	Dry	Not Coded
930	0.000	07/31/15	Sat	1836	Left-Turn	0	0	1	Night	Wet	Not Coded
931	0.000	07/31/15	Sat	2110	Sideswipe	0	1	0	Night	Wet	Not Coded
932	0.000	07/31/15	Sat	1406	Sideswipe	0	0	1	Day	Wet	Not Coded
933	0.000	07/31/15	Sat	1420	Left-Turn	0	0	1	Day	Wet	Not Coded
934	0.000	07/31/15	Sat	1700	Left-Turn	0	0	1	Day	Wet	Not Coded
935	0.000	07/31/15	Sat	2120	Left-Turn	0	1	0	Night	Wet	Not Coded
936	0.000	08/01/15	Sun	0455	Left-Turn	0	0	1	Night	Wet	Not Coded
937	0.000	08/02/15	Mon	2207	Other Traffic Barrier	0	1	0	Night	Dry	Not Coded
938	0.000	08/02/15	Mon	1259	Rear-End	0	0	1	Day	Dry	Not Coded
939	0.000	08/02/15	Mon	2219	Rear-End	0	0	1	Night	Dry	Not Coded
940	0.000	08/03/15	Tue	1727	Sideswipe	0	0	1	Day	Dry	Not Coded
941	0.000	08/03/15	Tue	1424	Rear-End	0	0	1	Day	Wet	Not Coded
942	0.000	08/03/15	Tue	1254	Rear-End	0	0	1	Day	Dry	Not Coded
943	0.000	08/04/15	Wed	1910	Sideswipe	0	0	1	Day	Dry	Not Coded
944	0.000	08/04/15	Wed	2209	Left-Turn	0	1	0	Night	Dry	Not Coded
945	0.000	08/04/15	Wed	1440	Rear-End	0	0	1	Day	Dry	Not Coded
946	0.000	08/04/15	Wed	1903	Right-Turn	0	0	1	Day	Dry	Not Coded
947	0.000	08/04/15	Wed	0945	Sideswipe	0	1	0	Day	Dry	Not Coded
948	0.000	08/04/15	Wed	1741	Rear-End	0	0	1	Day	Dry	Not Coded
949	0.000	08/04/15	Wed	0904	Left-Turn	0	0	1	Day	Dry	Not Coded
950	0.000	08/05/15	Thu	0847	Right-Turn	0	0	1	Day	Dry	Not Coded
951	0.000	08/05/15	Thu	2117	Sideswipe	0	0	1	Night	Dry	Not Coded
952	0.000	08/05/15	Thu	1335	Left-Turn	0	0	1	Day	Dry	Not Coded
953	0.000	08/05/15	Thu	1004	Rear-End	0	1	0	Day	Dry	Not Coded
954	0.000	08/05/15	Thu	2031	Rear-End	0	0	1	Night	Dry	Not Coded
955	0.000	08/05/15	Thu	1320	Rear-End	0	0	1	Day	Dry	Not Coded
956	0.000	08/05/15	Thu	1438	Parked Motor Vehicle	0	0	1	Day	Dry	Not Coded
957	0.000	08/05/15	Thu	1350	Rear-End	0	0	1	Day	Dry	Not Coded
958	0.000	08/06/15	Fri	1646	Rear-End	0	0	1	Day	Dry	Not Coded
959	0.000	08/07/15	Sat	1640	Left-Turn	0	0	1	Day	Dry	Not Coded
960	0.000	08/08/15	Sun	1947	Parked Motor Vehicle	0	0	1	Night	Dry	Not Coded
961	0.000	08/08/15	Sun	1454	Sideswipe	0	1	0	Day	Dry	Not Coded
962	0.000	08/09/15	Mon	1245	Rear-End	0	0	1	Day	Dry	Not Coded
963	0.000	08/09/15	Mon	1330	Sideswipe	0	0	1	Day	Dry	Not Coded
964	0.000	08/09/15	Mon	1452	Sideswipe	0	1	0	Day	Dry	Not Coded
965	0.000	08/10/15	Tue	1825	Rear-End	0	0	1	Day	Dry	Not Coded
966	0.000	08/10/15	Tue	1707	Left-Turn	0	0	1	Day	Dry	Not Coded

State of Florida Department of Transportation
CRASH SUMMARY

SECTION: Ludlam Trail Corridor f — STATE ROUTE: #N/A
ROADWAY LIMITS: 0 — M.P. 0.000 TO 0.000 — ENGINEER: 0
STUDY PERIOD: FROM 1/ 2015 TO 12/ 2015 — COUNTY: Miami-Dade

No.	MILE POST	DATE	DAY	TIME	CRASH TYPE	FATAL	INJURIES	PROP DAM	DAY / NIGHT	WET / DRY	CONTRIBUTING CAUSE (VEHICLE ONLY)
967	0.000	08/10/15	Tue	2041	Left-Turn	0	0	1	Night	Dry	Not Coded
968	0.000	08/10/15	Tue	1637	Angle	0	0	1	Day	Wet	Not Coded
969	0.000	08/10/15	Tue	1853	Rear-End	0	0	1	Day	Dry	Not Coded
970	0.000	08/11/15	Wed	1516	Left-Turn	0	0	1	Day	Dry	Not Coded
971	0.000	08/11/15	Wed	2215	Left-Turn	0	1	0	Night	Dry	Not Coded
972	0.000	08/11/15	Wed	1619	Rear-End	0	0	1	Day	Dry	Not Coded
973	0.000	08/11/15	Wed	1702	Rear-End	0	0	1	Day	Dry	Not Coded
974	0.000	08/12/15	Thu	0706	Rear-End	0	0	1	Day	Dry	Not Coded
975	0.000	08/12/15	Thu	1522	Sideswipe	0	0	1	Day	Dry	Not Coded
976	0.000	08/12/15	Thu	1420	Left-Turn	0	0	1	Day	Dry	Not Coded
977	0.000	08/12/15	Thu	0741	Angle	0	0	1	Day	Dry	Not Coded
978	0.000	08/12/15	Thu	1050	Rear-End	0	0	1	Day	Dry	Not Coded
979	0.000	08/13/15	Fri	1705	Backed Into	0	1	0	Night	Dry	Not Coded
980	0.000	08/13/15	Fri	1845	Angle	0	0	1	Day	Dry	Not Coded
981	0.000	08/13/15	Fri	1811	Angle	0	1	0	Day	Dry	Not Coded
982	0.000	08/13/15	Fri	1718	Angle	0	1	0	Day	Dry	Not Coded
983	0.000	08/13/15	Fri	2157	Rear-End	0	0	1	Night	Dry	Not Coded
984	0.000	08/14/15	Sat	1345	Angle	0	0	1	Day	Dry	Not Coded
985	0.000	08/14/15	Sat	1540	Rear-End	0	0	1	Day	Dry	Not Coded
986	0.000	08/14/15	Sat	1930	Sideswipe	0	0	1	Day	Wet	Not Coded
987	0.000	08/14/15	Sat	1310	Rear-End	0	0	1	Day	Dry	Not Coded
988	0.000	08/14/15	Sat	0810	Rear-End	0	0	1	Day	Dry	Not Coded
989	0.000	08/14/15	Sat	1807	Backed Into	0	0	1	Day	Dry	Not Coded
990	0.000	08/14/15	Sat	1147	Right-Turn	0	1	0	Day	Dry	Not Coded
991	0.000	08/14/15	Sat	2115	Rear-End	0	0	1	Night	Dry	Not Coded
992	0.000	08/14/15	Sat	1722	Left-Turn	0	0	1	Day	Dry	Not Coded
993	0.000	08/15/15	Sun	2250	Right-Turn	0	0	1	Night	Wet	Not Coded
994	0.000	08/15/15	Sun	0900	Left-Turn	0	0	1	Day	Wet	Not Coded
995	0.000	08/15/15	Sun	1454	Angle	0	0	1	Day	Dry	Not Coded
996	0.000	08/16/15	Mon	2122	Rear-End	0	0	1	Night	Dry	Not Coded
997	0.000	08/16/15	Mon	1211	Angle	0	0	1	Day	Dry	Not Coded
998	0.000	08/16/15	Mon	2201	Angle	0	1	0	Night	Dry	Not Coded
999	0.000	08/17/15	Tue	0845	Rear-End	0	0	1	Day	Dry	Not Coded
1000	0.000	08/17/15	Tue	1745	Head-On	0	0	1	Day	Dry	Not Coded
1001	0.000	08/17/15	Tue	1800	Left-Turn	0	0	1	Day	Dry	Not Coded
1002	0.000	08/18/15	Wed	1627	Rear-End	0	0	1	Day	Dry	Not Coded
1003	0.000	08/18/15	Wed	1726	Angle	0	0	1	Day	Dry	Not Coded
1004	0.000	08/18/15	Wed	0926	Rear-End	0	0	1	Day	Wet	Not Coded
1005	0.000	08/18/15	Wed	0800	Rear-End	0	0	1	Day	Dry	Not Coded
1006	0.000	08/18/15	Wed	0807	Rear-End	0	0	1	Day	Dry	Not Coded
1007	0.000	08/18/15	Wed	1707	Rear-End	0	0	1	Day	Dry	Not Coded
1008	0.000	08/18/15	Wed	0840	Angle	0	0	1	Day	Dry	Not Coded
1009	0.000	08/18/15	Wed	2041	Rear-End	0	0	1	Night	Dry	Not Coded
1010	0.000	08/19/15	Thu	1337	Left-Turn	0	0	1	Day	Dry	Not Coded
1011	0.000	08/19/15	Thu	1805	Left-Turn	0	0	1	Day	Dry	Not Coded
1012	0.000	08/19/15	Thu	1420	Pedalcycle	0	0	1	Day	Dry	Not Coded
1013	0.000	08/19/15	Thu	1830	Parked Motor Vehicle	0	1	0	Day	Dry	Not Coded
1014	0.000	08/19/15	Thu	1400	Right-Turn	0	0	1	Day	Dry	Not Coded
1015	0.000	08/19/15	Thu	1125	Rear-End	0	0	1	Day	Dry	Not Coded
1016	0.000	08/20/15	Fri	1550	Angle	0	0	1	Day	Dry	Not Coded
1017	0.000	08/20/15	Fri	0737	Angle	0	1	0	Day	Dry	Not Coded
1018	0.000	08/20/15	Fri	1705	Left-Turn	0	0	1	Day	Dry	Not Coded
1019	0.000	08/20/15	Fri	1800	Angle	0	0	1	Day	Dry	Not Coded
1020	0.000	08/20/15	Fri	1810	Rear-End	0	0	1	Day	Dry	Not Coded
1021	0.000	08/21/15	Sat	0745	Not Coded	0	0	1	Day	Dry	Not Coded
1022	0.000	08/21/15	Sat	1849	Sideswipe	0	0	1	Day	Dry	Not Coded
1023	0.000	08/22/15	Sun	1300	Angle	0	0	1	Day	Dry	Not Coded
1024	0.000	08/22/15	Sun	1120	Rear-End	0	1	0	Day	Dry	Not Coded
1025	0.000	08/22/15	Sun	1831	Right-Turn	0	1	0	Day	Dry	Not Coded
1026	0.000	08/22/15	Sun	1405	Angle	0	0	1	Day	Dry	Not Coded
1027	0.000	08/23/15	Mon	1423	Rear-End	0	1	0	Day	Wet	Not Coded
1028	0.000	08/24/15	Tue	0932	Rear-End	0	0	1	Day	Dry	Not Coded
1029	0.000	08/24/15	Tue	0910	Rear-End	0	0	1	Day	Dry	Not Coded
1030	0.000	08/24/15	Tue	1459	Rear-End	0	1	0	Day	Wet	Not Coded
1031	0.000	08/25/15	Wed	1850	Rear-End	0	0	1	Day	Dry	Not Coded
1032	0.000	08/25/15	Wed	1840	Left-Turn	0	0	1	Day	Dry	Not Coded
1033	0.000	08/25/15	Wed	0829	Rear-End	0	1	0	Day	Dry	Not Coded
1034	0.000	08/25/15	Wed	1900	Head-On	0	0	1	Night	Dry	Not Coded
1035	0.000	08/25/15	Wed	1544	Right-Turn	0	0	1	Day	Dry	Not Coded

State of Florida Department of Transportation
CRASH SUMMARY

SECTION: Ludlam Trail Corridor f — STATE ROUTE: #N/A
ROADWAY LIMITS: 0 — M.P. 0.000 TO 0.000 — ENGINEER: 0
STUDY PERIOD: FROM 1/ 2015 TO 12/ 2015 — COUNTY: Miami-Dade

No.	MILE POST	DATE	DAY	TIME	CRASH TYPE	FATAL	INJURIES	PROP DAM	DAY / NIGHT	WET / DRY	CONTRIBUTING CAUSE (VEHICLE ONLY)
1036	0.000	08/25/15	Wed	1656	Angle	0	0	1	Day	Dry	Not Coded
1037	0.000	08/25/15	Wed	1410	Angle	0	0	1	Day	Dry	Not Coded
1038	0.000	08/25/15	Wed	2016	Left-Turn	0	0	1	Night	Dry	Not Coded
1039	0.000	08/26/15	Thu	1536	Rear-End	0	0	1	Day	Dry	Not Coded
1040	0.000	08/26/15	Thu	2250	Rear-End	0	0	1	Night	Wet	Not Coded
1041	0.000	08/26/15	Thu	1255	Angle	0	0	1	Day	Dry	Not Coded
1042	0.000	08/26/15	Thu	2055	Sideswipe	0	0	1	Night	Wet	Not Coded
1043	0.000	08/26/15	Thu	1630	Sideswipe	0	0	1	Day	Dry	Not Coded
1044	0.000	08/26/15	Thu	0824	Angle	0	0	1	Day	Wet	Not Coded
1045	0.000	08/26/15	Thu	1110	Angle	0	0	1	Day	Dry	Not Coded
1046	0.000	08/27/15	Fri	2128	Guardrail Face	0	0	1	Unknown	Other	Not Coded
1047	0.000	08/27/15	Fri	2110	Sideswipe	0	0	1	Night	Dry	Not Coded
1048	0.000	08/27/15	Fri	2042	Rear-End	0	1	0	Day	Dry	Not Coded
1049	0.000	08/27/15	Fri	1720	Angle	0	0	1	Day	Dry	Not Coded
1050	0.000	08/27/15	Fri	0804	Rear-End	0	1	0	Day	Dry	Not Coded
1051	0.000	08/28/15	Sat	1405	Rear-End	0	0	1	Day	Dry	Not Coded
1052	0.000	08/28/15	Sat	1544	Not Coded	0	0	1	Day	Dry	Not Coded
1053	0.000	08/28/15	Sat	1250	Sideswipe	0	0	1	Day	Dry	Not Coded
1054	0.000	08/28/15	Sat	1511	Parked Motor Vehicle	0	0	1	Day	Dry	Not Coded
1055	0.000	08/29/15	Sun	2218	Backed Into	0	1	0	Night	Wet	Not Coded
1056	0.000	08/29/15	Sun	1430	Rear-End	0	0	1	Day	Dry	Not Coded
1057	0.000	08/30/15	Mon	2217	Rear-End	0	0	1	Night	Dry	Not Coded
1058	0.000	08/30/15	Mon	1600	Left-Turn	0	0	1	Day	Dry	Not Coded
1059	0.000	08/30/15	Mon	1355	Pedestrian	0	0	1	Day	Wet	Not Coded
1060	0.000	08/31/15	Tue	1858	Sideswipe	0	0	1	Night	Dry	Not Coded
1061	0.000	08/31/15	Tue	1629	Angle	0	0	1	Day	Dry	Not Coded
1062	0.000	09/01/15	Wed	1738	Rear-End	0	0	1	Day	Dry	Not Coded
1063	0.000	09/01/15	Wed	1436	Rear-End	0	0	1	Day	Dry	Not Coded
1064	0.000	09/01/15	Wed	1350	Curb	0	0	1	Day	Dry	Not Coded
1065	0.000	09/01/15	Wed	1410	Rear-End	0	0	1	Day	Dry	Not Coded
1066	0.000	09/01/15	Wed	1443	Angle	0	0	1	Day	Dry	Not Coded
1067	0.000	09/01/15	Wed	2130	Angle	0	0	1	Night	Dry	Not Coded
1068	0.000	09/01/15	Wed	0720	Tree (Standing)	0	1	0	Day	Dry	Not Coded
1069	0.000	09/01/15	Wed	1205	Sideswipe	0	0	1	Day	Dry	Not Coded
1070	0.000	09/02/15	Thu	1535	Left-Turn	0	0	1	Day	Dry	Not Coded
1071	0.000	09/02/15	Thu	0847	Rear-End	0	0	1	Day	Dry	Not Coded
1072	0.000	09/02/15	Thu	1833	Rear-End	0	0	1	Day	Dry	Not Coded
1073	0.000	09/02/15	Thu	1613	Right-Turn	0	0	1	Day	Dry	Not Coded
1074	0.000	09/02/15	Thu	0805	Backed Into	0	0	1	Day	Dry	Not Coded
1075	0.000	09/02/15	Thu	1838	Pedestrian	0	0	1	Day	Dry	Not Coded
1076	0.000	09/02/15	Thu	1156	Sideswipe	0	0	1	Day	Dry	Not Coded
1077	0.000	09/03/15	Fri	0920	Left-Turn	0	0	1	Day	Dry	Not Coded
1078	0.000	09/03/15	Fri	0000	Rear-End	0	0	1	Day	Dry	Not Coded
1079	0.000	09/03/15	Fri	0738	Sideswipe	0	0	1	Day	Dry	Not Coded
1080	0.000	09/03/15	Fri	1258	Angle	0	0	1	Day	Dry	Not Coded
1081	0.000	09/03/15	Fri	0648	Rear-End	0	0	1	Day	Dry	Not Coded
1082	0.000	09/03/15	Fri	1840	Rear-End	0	0	1	Night	Dry	Not Coded
1083	0.000	09/03/15	Fri	2103	Rear-End	0	0	1	Night	Dry	Not Coded
1084	0.000	09/04/15	Sat	1315	Rear-End	0	0	1	Day	Dry	Not Coded
1085	0.000	09/04/15	Sat	1815	Left-Turn	0	0	1	Day	Wet	Not Coded
1086	0.000	09/05/15	Sun	0849	Rear-End	0	0	1	Day	Dry	Not Coded
1087	0.000	09/05/15	Sun	1800	Rear-End	0	1	0	Day	Wet	Not Coded
1088	0.000	09/05/15	Sun	1329	Other Non-Fixed Object	0	0	1	Day	Wet	Not Coded
1089	0.000	09/05/15	Sun	1730	Rear-End	0	0	1	Day	Wet	Not Coded
1090	0.000	09/05/15	Sun	1027	Sideswipe	0	0	1	Day	Dry	Not Coded
1091	0.000	09/05/15	Sun	1034	Left-Turn	0	0	1	Day	Dry	Not Coded
1092	0.000	09/06/15	Mon	2035	Left-Turn	0	0	1	Night	Dry	Not Coded
1093	0.000	09/07/15	Tue	1604	Rear-End	0	0	1	Day	Dry	Not Coded
1094	0.000	09/08/15	Wed	2042	Angle	0	1	0	Night	Dry	Not Coded
1095	0.000	09/08/15	Wed	1736	Rear-End	0	0	1	Day	Dry	Not Coded
1096	0.000	09/08/15	Wed	1738	Sideswipe	0	0	1	Day	Dry	Not Coded
1097	0.000	09/08/15	Wed	1725	Rear-End	0	0	1	Day	Dry	Not Coded
1098	0.000	09/08/15	Wed	1340	Angle	0	0	1	Day	Dry	Not Coded
1099	0.000	09/08/15	Wed	2050	Angle	0	0	1	Night	Dry	Not Coded
1100	0.000	09/08/15	Wed	0745	Sideswipe	0	0	1	Day	Dry	Not Coded
1101	0.000	09/08/15	Wed	1828	Angle	0	1	0	Night	Dry	Not Coded
1102	0.000	09/09/15	Thu	0736	Rear-End	0	0	1	Day	Dry	Not Coded
1103	0.000	09/09/15	Thu	0115	Angle	0	0	1	Day	Dry	Not Coded
1104	0.000	09/10/15	Fri	0921	Other Non-Collision	0	0	1	Day	Wet	Not Coded

State of Florida Department of Transportation
CRASH SUMMARY

SECTION: Ludlam Trail Corridor f — STATE ROUTE: #N/A
ROADWAY LIMITS: 0 — M.P. 0.000 TO 0.000 — ENGINEER: 0
STUDY PERIOD: FROM 1/ 2015 TO 12/ 2015 — COUNTY: Miami-Dade

No.	MILE POST	DATE	DAY	TIME	CRASH TYPE	FATAL	INJURIES	PROP DAM	DAY / NIGHT	WET / DRY	CONTRIBUTING CAUSE (VEHICLE ONLY)
1105	0.000	09/10/15	Fri	1832	Left-Turn	0	0	1	Day	Dry	Not Coded
1106	0.000	09/10/15	Fri	0905	Angle	0	0	1	Day	Dry	Not Coded
1107	0.000	09/11/15	Sat	1434	Rear-End	0	0	1	Day	Dry	Not Coded
1108	0.000	09/11/15	Sat	1719	Rear-End	0	0	1	Day	Dry	Not Coded
1109	0.000	09/11/15	Sat	2030	Rear-End	0	0	1	Night	Dry	Not Coded
1110	0.000	09/11/15	Sat	1719	Rear-End	0	1	0	Day	Dry	Not Coded
1111	0.000	09/12/15	Sun	1605	Angle	0	0	1	Day	Dry	Not Coded
1112	0.000	09/12/15	Sun	2047	Rear-End	0	1	0	Night	Dry	Not Coded
1113	0.000	09/12/15	Sun	2250	Pedalcycle	0	0	1	Night	Dry	Not Coded
1114	0.000	09/12/15	Sun	1121	Parked Motor Vehicle	0	0	1	Day	Dry	Not Coded
1115	0.000	09/12/15	Sun	1015	Rear-End	0	0	1	Day	Wet	Not Coded
1116	0.000	09/13/15	Mon	1121	Sideswipe	0	0	1	Day	Dry	Not Coded
1117	0.000	09/14/15	Tue	0845	Rear-End	0	0	1	Day	Dry	Not Coded
1118	0.000	09/14/15	Tue	1902	Right-Turn	0	0	1	Night	Dry	Not Coded
1119	0.000	09/14/15	Tue	1720	Rear-End	0	0	1	Day	Dry	Not Coded
1120	0.000	09/14/15	Tue	0926	Left-Turn	0	0	1	Day	Dry	Not Coded
1121	0.000	09/14/15	Tue	1640	Angle	0	0	1	Day	Dry	Not Coded
1122	0.000	09/14/15	Tue	1725	Rear-End	0	0	1	Day	Dry	Not Coded
1123	0.000	09/15/15	Wed	1915	Angle	0	0	1	Day	Wet	Not Coded
1124	0.000	09/15/15	Wed	0750	Rear-End	0	1	0	Day	Wet	Not Coded
1125	0.000	09/15/15	Wed	1056	Rear-End	0	0	1	Day	Dry	Not Coded
1126	0.000	09/15/15	Wed	1340	Angle	0	0	1	Day	Dry	Not Coded
1127	0.000	09/15/15	Wed	0720	Angle	0	0	1	Day	Dry	Not Coded
1128	0.000	09/16/15	Thu	1239	Angle	0	0	1	Day	Wet	Not Coded
1129	0.000	09/16/15	Thu	0659	Rear-End	0	0	1	Day	Wet	Not Coded
1130	0.000	09/16/15	Thu	1234	Rear-End	0	1	0	Day	Wet	Not Coded
1131	0.000	09/16/15	Thu	0648	Angle	0	0	1	Night	Wet	Not Coded
1132	0.000	09/16/15	Thu	0947	Angle	0	0	1	Day	Wet	Not Coded
1133	0.000	09/16/15	Thu	1510	Rear-End	0	1	0	Day	Dry	Not Coded
1134	0.000	09/16/15	Thu	0803	Sideswipe	0	0	1	Day	Wet	Not Coded
1135	0.000	09/16/15	Thu	2200	Rear-End	0	0	1	Night	Wet	Not Coded
1136	0.000	09/16/15	Thu	0840	Right-Turn	0	0	1	Day	Wet	Not Coded
1137	0.000	09/16/15	Thu	1320	Left-Turn	0	0	1	Day	Wet	Not Coded
1138	0.000	09/17/15	Fri	0803	Sideswipe	0	0	1	Unknown	Other	Not Coded
1139	0.000	09/17/15	Fri	0737	Sideswipe	0	0	1	Day	Wet	Not Coded
1140	0.000	09/17/15	Fri	1615	Right-Turn	0	1	0	Day	Wet	Not Coded
1141	0.000	09/17/15	Fri	1700	Sideswipe	0	0	1	Day	Dry	Not Coded
1142	0.000	09/17/15	Fri	1606	Rear-End	0	0	1	Day	Wet	Not Coded
1143	0.000	09/18/15	Sat	1952	Left-Turn	0	0	1	Night	Wet	Not Coded
1144	0.000	09/19/15	Sun	1941	Rear-End	0	0	1	Day	Dry	Not Coded
1145	0.000	09/19/15	Sun	1958	Rear-End	0	0	1	Night	Dry	Not Coded
1146	0.000	09/20/15	Mon	2002	Rear-End	0	1	0	Night	Wet	Not Coded
1147	0.000	09/20/15	Mon	1640	Backed Into	0	0	1	Day	Dry	Not Coded
1148	0.000	09/20/15	Mon	1500	Left-Turn	0	0	1	Day	Dry	Not Coded
1149	0.000	09/21/15	Tue	0810	Left-Turn	0	0	1	Day	Dry	Not Coded
1150	0.000	09/21/15	Tue	1700	Rear-End	0	0	1	Day	Dry	Not Coded
1151	0.000	09/21/15	Tue	1600	Rear-End	0	0	1	Day	Dry	Not Coded
1152	0.000	09/21/15	Tue	1808	Sideswipe	0	0	1	Day	Dry	Not Coded
1153	0.000	09/22/15	Wed	1750	Not Coded	0	0	1	Day	Wet	Not Coded
1154	0.000	09/22/15	Wed	2138	Left-Turn	0	0	1	Night	Wet	Not Coded
1155	0.000	09/22/15	Wed	0825	Sideswipe	0	0	1	Day	Dry	Not Coded
1156	0.000	09/22/15	Wed	1030	Curb	0	0	1	Day	Dry	Not Coded
1157	0.000	09/22/15	Wed	1240	Left-Turn	0	1	0	Day	Dry	Not Coded
1158	0.000	09/23/15	Thu	1255	Sideswipe	0	0	1	Day	Dry	Not Coded
1159	0.000	09/23/15	Thu	1754	Left-Turn	0	0	1	Day	Dry	Not Coded
1160	0.000	09/23/15	Thu	1430	Right-Turn	0	0	1	Day	Dry	Not Coded
1161	0.000	09/24/15	Fri	0845	Left-Turn	0	1	0	Day	Wet	Not Coded
1162	0.000	09/24/15	Fri	1515	Rear-End	0	0	1	Day	Dry	Not Coded
1163	0.000	09/24/15	Fri	1602	Sideswipe	0	0	1	Day	Dry	Not Coded
1164	0.000	09/24/15	Fri	0900	Rear-End	0	0	1	Day	Wet	Not Coded
1165	0.000	09/24/15	Fri	1716	Rear-End	0	0	1	Day	Dry	Not Coded
1166	0.000	09/24/15	Fri	0720	Angle	0	0	1	Day	Wet	Not Coded
1167	0.000	09/24/15	Fri	0825	Rear-End	0	0	1	Day	Wet	Not Coded
1168	0.000	09/25/15	Sat	1751	Backed Into	0	0	1	Day	Wet	Not Coded
1169	0.000	09/25/15	Sat	0250	Sideswipe	0	0	1	Night	Dry	Not Coded
1170	0.000	09/25/15	Sat	1001	Angle	0	0	1	Day	Dry	Not Coded
1171	0.000	09/25/15	Sat	1145	Rear-End	0	0	1	Day	Dry	Not Coded
1172	0.000	09/25/15	Sat	0844	Sideswipe	0	0	1	Day	Dry	Not Coded
1173	0.000	09/25/15	Sat	2121	Backed Into	0	0	1	Night	Dry	Not Coded

State of Florida Department of Transportation
CRASH SUMMARY

SECTION: Ludlam Trail Corridor f — STATE ROUTE: #N/A
ROADWAY LIMITS: 0 — M.P. 0.000 TO 0.000 — ENGINEER: 0
STUDY PERIOD: FROM 1/ 2015 TO 12/ 2015 — COUNTY: Miami-Dade

No.	MILE POST	DATE	DAY	TIME	CRASH TYPE	FATAL	INJURIES	PROP DAM	DAY / NIGHT	WET / DRY	CONTRIBUTING CAUSE (VEHICLE ONLY)
1174	0.000	09/25/15	Sat	2035	Angle	0	0	1	Day	Dry	Not Coded
1175	0.000	09/26/15	Sun	1423	Angle	0	1	0	Day	Dry	Not Coded
1176	0.000	09/26/15	Sun	0920	Left-Turn	0	0	1	Day	Dry	Not Coded
1177	0.000	09/26/15	Sun	1715	Angle	0	1	0	Day	Dry	Not Coded
1178	0.000	09/26/15	Sun	0345	Not Coded	0	0	1	Night	Dry	Not Coded
1179	0.000	09/26/15	Sun	2221	Rear-End	0	1	0	Night	Dry	Not Coded
1180	0.000	09/26/15	Sun	0010	Pedestrian	0	0	1	Night	Dry	Not Coded
1181	0.000	09/26/15	Sun	0025	Rear-End	0	0	1	Night	Dry	Not Coded
1182	0.000	09/28/15	Tue	0825	Rear-End	0	1	0	Day	Dry	Not Coded
1183	0.000	09/28/15	Tue	1211	Rear-End	0	0	1	Day	Dry	Not Coded
1184	0.000	09/28/15	Tue	1753	Rear-End	0	1	0	Day	Dry	Not Coded
1185	0.000	09/28/15	Tue	1010	Sideswipe	0	0	1	Day	Dry	Not Coded
1186	0.000	09/28/15	Tue	0724	Angle	0	0	1	Day	Dry	Not Coded
1187	0.000	09/29/15	Wed	2046	Fence	0	0	1	Night	Wet	Not Coded
1188	0.000	09/29/15	Wed	1733	Rear-End	0	0	1	Day	Wet	Not Coded
1189	0.000	09/29/15	Wed	1459	Rear-End	0	0	1	Day	Dry	Not Coded
1190	0.000	09/29/15	Wed	0652	Rear-End	0	0	1	Day	Dry	Not Coded
1191	0.000	09/29/15	Wed	1947	Rear-End	0	0	1	Night	Wet	Not Coded
1192	0.000	09/29/15	Wed	1850	Rear-End	0	0	1	Day	Wet	Not Coded
1193	0.000	09/29/15	Wed	1916	Rear-End	0	0	1	Night	Wet	Not Coded
1194	0.000	09/29/15	Wed	1125	Sideswipe	0	0	1	Day	Dry	Not Coded
1195	0.000	09/30/15	Thu	0745	Overturn/Rollover	0	0	1	Day	Wet	Not Coded
1196	0.000	09/30/15	Thu	0748	Sideswipe	0	0	1	Day	Dry	Not Coded
1197	0.000	09/30/15	Thu	2017	Left-Turn	0	0	1	Night	Dry	Not Coded
1198	0.000	09/30/15	Thu	1429	Rear-End	0	0	1	Day	Dry	Not Coded
1199	0.000	10/01/15	Fri	1245	Angle	0	0	1	Day	Dry	Not Coded
1200	0.000	10/01/15	Fri	1153	Rear-End	0	0	1	Day	Dry	Not Coded
1201	0.000	10/01/15	Fri	0819	Left-Turn	0	0	1	Day	Dry	Not Coded
1202	0.000	10/02/15	Sat	1223	Rear-End	0	0	1	Day	Dry	Not Coded
1203	0.000	10/02/15	Sat	1839	Backed Into	0	0	1	Day	Dry	Not Coded
1204	0.000	10/02/15	Sat	1730	Left-Turn	0	0	1	Day	Dry	Not Coded
1205	0.000	10/02/15	Sat	0808	Rear-End	0	0	1	Day	Dry	Not Coded
1206	0.000	10/03/15	Sun	1039	Rear-End	0	1	0	Day	Dry	Not Coded
1207	0.000	10/03/15	Sun	0557	Rear-End	0	0	1	Night	Dry	Not Coded
1208	0.000	10/03/15	Sun	2008	Rear-End	0	0	1	Unknown	Dry	Not Coded
1209	0.000	10/04/15	Mon	1235	Angle	0	0	1	Day	Dry	Not Coded
1210	0.000	10/04/15	Mon	2000	Rear-End	0	0	1	Night	Dry	Not Coded
1211	0.000	10/04/15	Mon	0255	Backed Into	0	0	1	Night	Dry	Not Coded
1212	0.000	10/05/15	Tue	1703	Sideswipe	0	0	1	Day	Dry	Not Coded
1213	0.000	10/05/15	Tue	1930	Sideswipe	0	1	0	Night	Dry	Not Coded
1214	0.000	10/05/15	Tue	0725	Left-Turn	0	0	1	Day	Dry	Not Coded
1215	0.000	10/05/15	Tue	0854	Rear-End	0	0	1	Day	Dry	Not Coded
1216	0.000	10/06/15	Wed	1634	Backed Into	0	1	0	Day	Dry	Not Coded
1217	0.000	10/06/15	Wed	1743	Left-Turn	0	1	0	Day	Dry	Not Coded
1218	0.000	10/06/15	Wed	1519	Other Non-Fixed Object	0	0	1	Day	Dry	Not Coded
1219	0.000	10/06/15	Wed	1844	Sideswipe	0	0	1	Night	Dry	Not Coded
1220	0.000	10/06/15	Wed	2029	Rear-End	0	0	1	Night	Dry	Not Coded
1221	0.000	10/07/15	Thu	2220	Sideswipe	0	0	1	Night	Wet	Not Coded
1222	0.000	10/08/15	Fri	1500	Rear-End	0	0	1	Day	Dry	Not Coded
1223	0.000	10/08/15	Fri	1345	Left-Turn	0	0	1	Day	Dry	Not Coded
1224	0.000	10/09/15	Sat	2010	Parked Motor Vehicle	0	0	1	Day	Dry	Not Coded
1225	0.000	10/09/15	Sat	0821	Left-Turn	0	0	1	Day	Dry	Not Coded
1226	0.000	10/09/15	Sat	1805	Rear-End	0	1	0	Day	Dry	Not Coded
1227	0.000	10/09/15	Sat	1810	Angle	0	0	1	Unknown	Other	Not Coded
1228	0.000	10/09/15	Sat	2115	Rear-End	0	0	1	Night	Dry	Not Coded
1229	0.000	10/09/15	Sat	1007	Left-Turn	0	0	1	Day	Dry	Not Coded
1230	0.000	10/09/15	Sat	1434	Not Coded	0	0	1	Day	Dry	Not Coded
1231	0.000	10/09/15	Sat	1453	Sideswipe	0	0	1	Day	Dry	Not Coded
1232	0.000	10/10/15	Sun	1505	Left-Turn	0	0	1	Day	Dry	Not Coded
1233	0.000	10/10/15	Sun	1250	Rear-End	0	0	1	Day	Dry	Not Coded
1234	0.000	10/10/15	Sun	0959	Sideswipe	0	0	1	Day	Dry	Not Coded
1235	0.000	10/10/15	Sun	0620	Rear-End	0	1	0	Night	Dry	Not Coded
1236	0.000	10/12/15	Tue	1159	Left-Turn	0	0	1	Day	Dry	Not Coded
1237	0.000	10/12/15	Tue	0901	Rear-End	0	1	0	Day	Dry	Not Coded
1238	0.000	10/12/15	Tue	0810	Rear-End	0	0	1	Day	Dry	Not Coded
1239	0.000	10/13/15	Wed	1717	Angle	0	0	1	Day	Wet	Not Coded
1240	0.000	10/13/15	Wed	1030	Rear-End	0	1	0	Day	Dry	Not Coded
1241	0.000	10/13/15	Wed	1814	Rear-End	0	0	1	Day	Wet	Not Coded
1242	0.000	10/13/15	Wed	0849	Angle	0	0	1	Day	Dry	Not Coded

State of Florida Department of Transportation
CRASH SUMMARY

SECTION: Ludlam Trail Corridor f — STATE ROUTE: #N/A
ROADWAY LIMITS: 0 — M.P. 0.000 TO 0.000 — ENGINEER: 0
STUDY PERIOD: FROM 1/ 2015 TO 12/ 2015 — COUNTY: Miami-Dade

No.	MILE POST	DATE	DAY	TIME	CRASH TYPE	FATAL	INJURIES	PROP DAM	DAY / NIGHT	WET / DRY	CONTRIBUTING CAUSE (VEHICLE ONLY)
1243	0.000	10/13/15	Wed	1500	Angle	0	0	1	Day	Dry	Not Coded
1244	0.000	10/13/15	Wed	1150	Rear-End	0	0	1	Day	Dry	Not Coded
1245	0.000	10/14/15	Thu	0821	Rear-End	0	0	1	Day	Dry	Not Coded
1246	0.000	10/14/15	Thu	1618	Rear-End	0	0	1	Day	Dry	Not Coded
1247	0.000	10/15/15	Fri	0845	Rear-End	0	0	1	Day	Dry	Not Coded
1248	0.000	10/15/15	Fri	1335	Angle	0	1	0	Day	Dry	Not Coded
1249	0.000	10/15/15	Fri	1120	Left-Turn	0	0	1	Day	Wet	Not Coded
1250	0.000	10/15/15	Fri	0845	Head-On	0	0	1	Day	Dry	Not Coded
1251	0.000	10/15/15	Fri	1846	Rear-End	0	0	1	Day	Dry	Not Coded
1252	0.000	10/15/15	Fri	1421	Angle	0	0	1	Day	Dry	Not Coded
1253	0.000	10/16/15	Sat	0510	Rear-End	0	1	0	Night	Dry	Not Coded
1254	0.000	10/16/15	Sat	1549	Sideswipe	0	0	1	Day	Dry	Not Coded
1255	0.000	10/16/15	Sat	1850	Rear-End	0	0	1	Night	Wet	Not Coded
1256	0.000	10/17/15	Sun	1212	Sideswipe	0	0	1	Day	Dry	Not Coded
1257	0.000	10/17/15	Sun	1219	Right-Turn	0	0	1	Day	Dry	Not Coded
1258	0.000	10/17/15	Sun	1100	Rear-End	0	0	1	Day	Dry	Not Coded
1259	0.000	10/17/15	Sun	1412	Sideswipe	0	0	1	Day	Dry	Not Coded
1260	0.000	10/17/15	Sun	1220	Rear-End	0	0	1	Day	Dry	Not Coded
1261	0.000	10/18/15	Mon	1630	Angle	0	0	1	Day	Dry	Not Coded
1262	0.000	10/18/15	Mon	1842	Rear-End	0	1	0	Night	Dry	Not Coded
1263	0.000	10/18/15	Mon	2319	Rear-End	0	0	1	Night	Wet	Not Coded
1264	0.000	10/18/15	Mon	0040	Rear-End	0	1	0	Night	Dry	Not Coded
1265	0.000	10/19/15	Tue	1655	Rear-End	0	1	0	Day	Dry	Not Coded
1266	0.000	10/19/15	Tue	1740	Rear-End	0	0	1	Day	Dry	Not Coded
1267	0.000	10/19/15	Tue	1810	Rear-End	0	0	1	Unknown	Other	Not Coded
1268	0.000	10/19/15	Tue	1540	Rear-End	0	0	1	Day	Dry	Not Coded
1269	0.000	10/19/15	Tue	2320	Rear-End	0	0	1	Night	Dry	Not Coded
1270	0.000	10/19/15	Tue	1520	Rear-End	0	0	1	Day	Dry	Not Coded
1271	0.000	10/19/15	Tue	1927	Angle	0	0	1	Night	Dry	Not Coded
1272	0.000	10/20/15	Wed	1653	Rear-End	0	0	1	Day	Dry	Not Coded
1273	0.000	10/20/15	Wed	0755	Left-Turn	0	0	1	Day	Dry	Not Coded
1274	0.000	10/20/15	Wed	1130	Angle	0	0	1	Day	Dry	Not Coded
1275	0.000	10/20/15	Wed	0753	Sideswipe	0	0	1	Unknown	Other	Not Coded
1276	0.000	10/20/15	Wed	1842	Rear-End	0	0	1	Night	Dry	Not Coded
1277	0.000	10/20/15	Wed	2042	Angle	0	0	1	Night	Dry	Not Coded
1278	0.000	10/20/15	Wed	0845	Not Coded	0	0	1	Day	Dry	Not Coded
1279	0.000	10/20/15	Wed	1315	Sideswipe	0	0	1	Day	Dry	Not Coded
1280	0.000	10/20/15	Wed	2300	Angle	0	0	1	Night	Dry	Not Coded
1281	0.000	10/21/15	Thu	1531	Sideswipe	0	0	1	Day	Dry	Not Coded
1282	0.000	10/21/15	Thu	1415	Angle	0	0	1	Day	Dry	Not Coded
1283	0.000	10/21/15	Thu	1700	Angle	0	0	1	Day	Dry	Not Coded
1284	0.000	10/21/15	Thu	1436	Rear-End	0	0	1	Day	Dry	Not Coded
1285	0.000	10/21/15	Thu	1100	Right-Turn	0	1	0	Day	Dry	Not Coded
1286	0.000	10/22/15	Fri	1034	Left-Turn	0	0	1	Day	Dry	Not Coded
1287	0.000	10/22/15	Fri	1848	Rear-End	0	1	0	Day	Dry	Not Coded
1288	0.000	10/23/15	Sat	1150	Right-Turn	0	0	1	Day	Dry	Not Coded
1289	0.000	10/23/15	Sat	2053	Angle	0	0	1	Night	Dry	Not Coded
1290	0.000	10/24/15	Sun	0848	Sideswipe	0	1	0	Day	Wet	Not Coded
1291	0.000	10/24/15	Sun	1420	Rear-End	0	0	1	Day	Dry	Not Coded
1292	0.000	10/24/15	Sun	2250	Right-Turn	0	0	1	Night	Wet	Not Coded
1293	0.000	10/24/15	Sun	1415	Rear-End	0	0	1	Day	Wet	Not Coded
1294	0.000	10/24/15	Sun	0702	Angle	0	0	1	Night	Wet	Not Coded
1295	0.000	10/24/15	Sun	2223	Rear-End	0	1	0	Night	Dry	Not Coded
1296	0.000	10/25/15	Mon	1722	Right-Turn	0	0	1	Day	Dry	Not Coded
1297	0.000	10/25/15	Mon	1430	Left-Turn	0	0	1	Day	Dry	Not Coded
1298	0.000	10/25/15	Mon	0257	Rear-End	0	0	1	Night	Dry	Not Coded
1299	0.000	10/25/15	Mon	1630	Backed Into	0	1	0	Day	Dry	Not Coded
1300	0.000	10/26/15	Tue	1820	Angle	0	0	1	Day	Dry	Not Coded
1301	0.000	10/26/15	Tue	0903	Rear-End	0	1	0	Day	Dry	Not Coded
1302	0.000	10/26/15	Tue	0838	Rear-End	0	0	1	Day	Dry	Not Coded
1303	0.000	10/26/15	Tue	1232	Angle	0	0	1	Day	Dry	Not Coded
1304	0.000	10/26/15	Tue	1815	Rear-End	0	0	1	Day	Dry	Not Coded
1305	0.000	10/26/15	Tue	0700	Rear-End	0	0	1	Night	Wet	Not Coded
1306	0.000	10/27/15	Wed	1628	Rear-End	0	0	1	Day	Dry	Not Coded
1307	0.000	10/27/15	Wed	2000	Angle	0	0	1	Night	Dry	Not Coded
1308	0.000	10/27/15	Wed	1834	Left-Turn	0	0	1	Day	Dry	Not Coded
1309	0.000	10/28/15	Thu	1010	Rear-End	0	0	1	Day	Wet	Not Coded
1310	0.000	10/28/15	Thu	0640	Angle	0	0	1	Day	Wet	Not Coded
1311	0.000	10/28/15	Thu	1939	Rear-End	0	0	1	Day	Dry	Not Coded

State of Florida Department of Transportation
CRASH SUMMARY

SECTION: Ludlam Trail Corridor f — STATE ROUTE: #N/A
ROADWAY LIMITS: 0 — M.P. 0.000 TO 0.000 — ENGINEER: 0
STUDY PERIOD: FROM 1/ 2015 TO 12/ 2015 — COUNTY: Miami-Dade

No.	MILE POST	DATE	DAY	TIME	CRASH TYPE	FATAL	INJURIES	PROP DAM	DAY / NIGHT	WET / DRY	CONTRIBUTING CAUSE (VEHICLE ONLY)
1312	0.000	10/28/15	Thu	1850	Rear-End	0	0	1	Night	Dry	Not Coded
1313	0.000	10/28/15	Thu	0702	Angle	0	1	0	Day	Dry	Not Coded
1314	0.000	10/28/15	Thu	2028	Rear-End	0	0	1	Night	Dry	Not Coded
1315	0.000	10/28/15	Thu	1700	Angle	0	0	1	Day	Dry	Not Coded
1316	0.000	10/29/15	Fri	0825	Overturn/Rollover	0	0	1	Day	Dry	Not Coded
1317	0.000	10/29/15	Fri	1708	Rear-End	0	0	1	Day	Dry	Not Coded
1318	0.000	10/29/15	Fri	1620	Other Non-Fixed Object	0	0	1	Day	Dry	Not Coded
1319	0.000	10/30/15	Sat	1845	Rear-End	0	0	1	Night	Dry	Not Coded
1320	0.000	10/30/15	Sat	1705	Left-Turn	0	0	1	Day	Dry	Not Coded
1321	0.000	10/30/15	Sat	1448	Rear-End	0	1	0	Day	Dry	Not Coded
1322	0.000	10/30/15	Sat	1416	Angle	0	0	1	Day	Dry	Not Coded
1323	0.000	10/30/15	Sat	1445	Sideswipe	0	0	1	Day	Dry	Not Coded
1324	0.000	10/30/15	Sat	1655	Parked Motor Vehicle	0	0	1	Day	Dry	Not Coded
1325	0.000	10/30/15	Sat	0922	Angle	0	1	0	Day	Dry	Not Coded
1326	0.000	10/30/15	Sat	0920	Rear-End	0	0	1	Day	Dry	Not Coded
1327	0.000	10/30/15	Sat	1345	Overturn/Rollover	0	0	1	Day	Dry	Not Coded
1328	0.000	10/31/15	Sun	0255	Angle	0	0	1	Night	Dry	Not Coded
1329	0.000	10/31/15	Sun	0525	Left-Turn	0	1	0	Night	Dry	Not Coded
1330	0.000	10/31/15	Sun	2328	Rear-End	0	0	1	Night	Dry	Not Coded
1331	0.000	11/01/15	Mon	0011	Sideswipe	0	1	0	Night	Dry	Not Coded
1332	0.000	11/02/15	Tue	0759	Rear-End	0	1	0	Day	Dry	Not Coded
1333	0.000	11/02/15	Tue	1205	Rear-End	0	0	1	Day	Dry	Not Coded
1334	0.000	11/02/15	Tue	1220	Angle	0	0	1	Day	Dry	Not Coded
1335	0.000	11/02/15	Tue	0810	Rear-End	0	0	1	Day	Dry	Not Coded
1336	0.000	11/02/15	Tue	1840	Sideswipe	0	0	1	Night	Dry	Not Coded
1337	0.000	11/02/15	Tue	1411	Rear-End	0	0	1	Day	Dry	Not Coded
1338	0.000	11/03/15	Wed	0954	Angle	0	1	0	Day	Dry	Not Coded
1339	0.000	11/03/15	Wed	1016	Left-Turn	0	0	1	Day	Dry	Not Coded
1340	0.000	11/03/15	Wed	1730	Angle	0	1	0	Night	Dry	Not Coded
1341	0.000	11/03/15	Wed	1630	Rear-End	0	0	1	Day	Dry	Not Coded
1342	0.000	11/03/15	Wed	1825	Rear-End	0	0	1	Night	Dry	Not Coded
1343	0.000	11/04/15	Thu	1910	Rear-End	0	0	1	Night	Dry	Not Coded
1344	0.000	11/04/15	Thu	1502	Angle	0	0	1	Day	Dry	Not Coded
1345	0.000	11/04/15	Thu	1615	Backed Into	0	0	1	Day	Dry	Not Coded
1346	0.000	11/04/15	Thu	0048	Right-Turn	0	1	0	Night	Dry	Not Coded
1347	0.000	11/04/15	Thu	1640	Right-Turn	0	0	1	Day	Dry	Not Coded
1348	0.000	11/04/15	Thu	1618	Left-Turn	0	0	1	Night	Dry	Not Coded
1349	0.000	11/05/15	Fri	1136	Angle	0	0	1	Unknown	Other	Not Coded
1350	0.000	11/05/15	Fri	1810	Rear-End	0	1	0	Night	Dry	Not Coded
1351	0.000	11/05/15	Fri	1359	Rear-End	0	0	1	Day	Dry	Not Coded
1352	0.000	11/05/15	Fri	1807	Angle	0	0	1	Night	Dry	Not Coded
1353	0.000	11/05/15	Fri	0838	Left-Turn	0	0	1	Day	Dry	Not Coded
1354	0.000	11/06/15	Sat	1620	Left-Turn	0	0	1	Day	Dry	Not Coded
1355	0.000	11/06/15	Sat	0641	Left-Turn	0	0	1	Day	Dry	Not Coded
1356	0.000	11/06/15	Sat	1520	Rear-End	0	0	1	Day	Dry	Not Coded
1357	0.000	11/06/15	Sat	1607	Left-Turn	0	1	0	Day	Dry	Not Coded
1358	0.000	11/07/15	Sun	1210	Rear-End	0	0	1	Day	Dry	Not Coded
1359	0.000	11/07/15	Sun	1110	Left-Turn	0	0	1	Day	Dry	Not Coded
1360	0.000	11/07/15	Sun	1745	Rear-End	0	0	1	Night	Dry	Not Coded
1361	0.000	11/07/15	Sun	1528	Rear-End	0	0	1	Day	Dry	Not Coded
1362	0.000	11/08/15	Mon	1430	Rear-End	0	0	1	Day	Dry	Not Coded
1363	0.000	11/08/15	Mon	0500	Rear-End	0	0	1	Night	Dry	Not Coded
1364	0.000	11/08/15	Mon	1900	Rear-End	0	0	1	Day	Dry	Not Coded
1365	0.000	11/09/15	Tue	0648	Rear-End	0	0	1	Day	Dry	Not Coded
1366	0.000	11/09/15	Tue	1445	Head-On	0	0	1	Day	Dry	Not Coded
1367	0.000	11/09/15	Tue	0741	Rear-End	0	0	1	Day	Dry	Not Coded
1368	0.000	11/09/15	Tue	1810	Angle	0	1	0	Night	Dry	Not Coded
1369	0.000	11/09/15	Tue	1857	Backed Into	0	0	1	Night	Dry	Not Coded
1370	0.000	11/10/15	Wed	0705	Sideswipe	0	0	1	Day	Dry	Not Coded
1371	0.000	11/10/15	Wed	1825	Rear-End	0	0	1	Night	Dry	Not Coded
1372	0.000	11/10/15	Wed	1620	Pedalcycle	0	0	1	Day	Dry	Not Coded
1373	0.000	11/10/15	Wed	1745	Not Coded	0	1	0	Night	Dry	Not Coded
1374	0.000	11/10/15	Wed	1439	Rear-End	0	0	1	Day	Dry	Not Coded
1375	0.000	11/10/15	Wed	1850	Angle	0	0	1	Night	Dry	Not Coded
1376	0.000	11/10/15	Wed	0717	Left-Turn	0	0	1	Day	Dry	Not Coded
1377	0.000	11/11/15	Thu	1153	Rear-End	0	0	1	Day	Dry	Not Coded
1378	0.000	11/12/15	Fri	0720	Parked Motor Vehicle	0	0	1	Day	Dry	Not Coded
1379	0.000	11/12/15	Fri	0950	Backed Into	0	0	1	Day	Dry	Not Coded
1380	0.000	11/13/15	Sat	1820	Rear-End	0	0	1	Day	Dry	Not Coded

State of Florida Department of Transportation
CRASH SUMMARY

SECTION: Ludlam Trail Corridor f — STATE ROUTE: #N/A
ROADWAY LIMITS: 0 — M.P. 0.000 TO 0.000 — ENGINEER: 0
STUDY PERIOD: FROM 1/ 2015 TO 12/ 2015 — COUNTY: Miami-Dade

No.	MILE POST	DATE	DAY	TIME	CRASH TYPE	FATAL	INJURIES	PROP DAM	DAY / NIGHT	WET / DRY	CONTRIBUTING CAUSE (VEHICLE ONLY)
1381	0.000	11/13/15	Sat	1910	Rear-End	0	0	1	Night	Dry	Not Coded
1382	0.000	11/13/15	Sat	2353	Rear-End	0	1	0	Night	Wet	Not Coded
1383	0.000	11/14/15	Sun	0936	Angle	0	1	0	Day	Dry	Not Coded
1384	0.000	11/14/15	Sun	1215	Pedestrian	0	0	1	Day	Wet	Not Coded
1385	0.000	11/14/15	Sun	1100	Rear-End	0	1	0	Day	Dry	Not Coded
1386	0.000	11/14/15	Sun	0247	Curb	0	1	0	Night	Wet	Not Coded
1387	0.000	11/15/15	Mon	0933	Pedalcycle	0	0	1	Day	Dry	Not Coded
1388	0.000	11/16/15	Tue	1449	Angle	0	0	1	Day	Dry	Not Coded
1389	0.000	11/16/15	Tue	1702	Pedestrian	0	0	1	Day	Dry	Not Coded
1390	0.000	11/16/15	Tue	1750	Sideswipe	0	1	0	Night	Dry	Not Coded
1391	0.000	11/16/15	Tue	1820	Angle	0	0	1	Night	Dry	Not Coded
1392	0.000	11/16/15	Tue	1209	Rear-End	0	0	1	Day	Dry	Not Coded
1393	0.000	11/16/15	Tue	2208	Rear-End	0	0	1	Night	Wet	Not Coded
1394	0.000	11/16/15	Tue	0925	Left-Turn	0	0	1	Day	Dry	Not Coded
1395	0.000	11/17/15	Wed	1415	Angle	0	1	0	Day	Dry	Not Coded
1396	0.000	11/17/15	Wed	1359	Left-Turn	0	0	1	Day	Dry	Not Coded
1397	0.000	11/17/15	Wed	0835	Left-Turn	0	0	1	Day	Dry	Not Coded
1398	0.000	11/17/15	Wed	2210	Sideswipe	0	0	1	Night	Wet	Not Coded
1399	0.000	11/17/15	Wed	1845	Rear-End	0	0	1	Day	Dry	Not Coded
1400	0.000	11/17/15	Wed	1237	Rear-End	0	0	1	Day	Dry	Not Coded
1401	0.000	11/17/15	Wed	0900	Parked Motor Vehicle	0	0	1	Day	Dry	Not Coded
1402	0.000	11/17/15	Wed	2150	Rear-End	0	0	1	Night	Dry	Not Coded
1403	0.000	11/18/15	Thu	1540	Rear-End	0	0	1	Day	Dry	Not Coded
1404	0.000	11/18/15	Thu	0932	Parked Motor Vehicle	0	0	1	Day	Dry	Not Coded
1405	0.000	11/19/15	Fri	1930	Angle	0	0	1	Night	Dry	Not Coded
1406	0.000	11/19/15	Fri	1037	Rear-End	0	0	1	Day	Dry	Not Coded
1407	0.000	11/19/15	Fri	1540	Sideswipe	0	0	1	Day	Dry	Not Coded
1408	0.000	11/19/15	Fri	1426	Sideswipe	0	0	1	Day	Dry	Not Coded
1409	0.000	11/19/15	Fri	0917	Left-Turn	0	0	1	Day	Dry	Not Coded
1410	0.000	11/19/15	Fri	1554	Rear-End	0	0	1	Day	Dry	Not Coded
1411	0.000	11/19/15	Fri	1908	Angle	0	0	1	Night	Dry	Not Coded
1412	0.000	11/19/15	Fri	1100	Rear-End	0	0	1	Day	Dry	Not Coded
1413	0.000	11/20/15	Sat	1635	Angle	0	0	1	Day	Dry	Not Coded
1414	0.000	11/20/15	Sat	2233	Angle	0	0	1	Night	Dry	Not Coded
1415	0.000	11/20/15	Sat	1908	Angle	0	0	1	Night	Dry	Not Coded
1416	0.000	11/20/15	Sat	1212	Rear-End	0	1	0	Day	Dry	Not Coded
1417	0.000	11/20/15	Sat	0650	Left-Turn	0	0	1	Day	Dry	Not Coded
1418	0.000	11/20/15	Sat	1930	Rear-End	0	0	1	Night	Dry	Not Coded
1419	0.000	11/20/15	Sat	1455	Sideswipe	0	0	1	Day	Dry	Not Coded
1420	0.000	11/20/15	Sat	1651	Rear-End	0	0	1	Day	Dry	Not Coded
1421	0.000	11/21/15	Sun	1215	Sideswipe	0	0	1	Day	Dry	Not Coded
1422	0.000	11/21/15	Sun	1519	Left-Turn	0	0	1	Day	Wet	Not Coded
1423	0.000	11/21/15	Sun	1321	Angle	0	0	1	Day	Wet	Not Coded
1424	0.000	11/21/15	Sun	0950	Right-Turn	0	0	1	Day	Dry	Not Coded
1425	0.000	11/21/15	Sun	1920	Parked Motor Vehicle	0	0	1	Day	Dry	Not Coded
1426	0.000	11/22/15	Mon	0043	Not Coded	0	0	1	Night	Wet	Not Coded
1427	0.000	11/22/15	Mon	1455	Sideswipe	0	0	1	Day	Dry	Not Coded
1428	0.000	11/23/15	Tue	2129	Angle	0	0	1	Night	Dry	Not Coded
1429	0.000	11/23/15	Tue	1920	Rear-End	0	1	0	Night	Dry	Not Coded
1430	0.000	11/23/15	Tue	1759	Angle	0	0	1	Day	Dry	Not Coded
1431	0.000	11/23/15	Tue	0935	Right-Turn	0	0	1	Day	Dry	Not Coded
1432	0.000	11/23/15	Tue	1050	Rear-End	0	0	1	Day	Dry	Not Coded
1433	0.000	11/23/15	Tue	1730	Sideswipe	0	0	1	Night	Dry	Not Coded
1434	0.000	11/24/15	Wed	1419	Rear-End	0	0	1	Day	Dry	Not Coded
1435	0.000	11/24/15	Wed	1244	Left-Turn	0	0	1	Day	Dry	Not Coded
1436	0.000	11/24/15	Wed	1910	Pedalcycle	0	0	1	Night	Dry	Not Coded
1437	0.000	11/24/15	Wed	0827	Sideswipe	0	0	1	Day	Dry	Not Coded
1438	0.000	11/24/15	Wed	1311	Rear-End	0	0	1	Day	Dry	Not Coded
1439	0.000	11/24/15	Wed	1033	Angle	0	0	1	Day	Dry	Not Coded
1440	0.000	11/24/15	Wed	1850	Rear-End	0	0	1	Night	Dry	Not Coded
1441	0.000	11/25/15	Thu	2045	Angle	0	0	1	Day	Dry	Not Coded
1442	0.000	11/25/15	Thu	1619	Left-Turn	0	0	1	Day	Dry	Not Coded
1443	0.000	11/26/15	Fri	1216	Rear-End	0	0	1	Day	Dry	Not Coded
1444	0.000	11/26/15	Fri	2350	Angle	0	0	1	Night	Wet	Not Coded
1445	0.000	11/27/15	Sat	2010	Left-Turn	0	0	1	Night	Dry	Not Coded
1446	0.000	11/27/15	Sat	2115	Not Coded	0	0	1	Night	Dry	Not Coded
1447	0.000	11/29/15	Mon	1354	Rear-End	0	0	1	Day	Dry	Not Coded
1448	0.000	11/29/15	Mon	1643	Rear-End	0	0	1	Day	Dry	Not Coded
1449	0.000	11/29/15	Mon	1012	Rear-End	0	0	1	Day	Dry	Not Coded

State of Florida Department of Transportation
CRASH SUMMARY

SECTION: Ludlam Trail Corridor f — STATE ROUTE: #N/A
ROADWAY LIMITS: 0 — M.P. 0.000 TO 0.000 — ENGINEER: 0
STUDY PERIOD: FROM 1/ 2015 TO 12/ 2015 — COUNTY: Miami-Dade

No.	MILE POST	DATE	DAY	TIME	CRASH TYPE	FATAL	INJURIES	PROP DAM	DAY / NIGHT	WET / DRY	CONTRIBUTING CAUSE (VEHICLE ONLY)
1450	0.000	11/30/15	Tue	1334	Sideswipe	0	0	1	Day	Dry	Not Coded
1451	0.000	11/30/15	Tue	1704	Rear-End	0	0	1	Day	Dry	Not Coded
1452	0.000	11/30/15	Tue	0730	Left-Turn	0	0	1	Day	Dry	Not Coded
1453	0.000	11/30/15	Tue	1830	Rear-End	0	0	1	Night	Wet	Not Coded
1454	0.000	11/30/15	Tue	1408	Left-Turn	0	0	1	Day	Dry	Not Coded
1455	0.000	12/01/15	Wed	1105	Rear-End	0	1	0	Day	Dry	Not Coded
1456	0.000	12/01/15	Wed	0145	Rear-End	0	0	1	Night	Wet	Not Coded
1457	0.000	12/01/15	Wed	1808	Sideswipe	0	0	1	Day	Dry	Not Coded
1458	0.000	12/01/15	Wed	1750	Left-Turn	0	0	1	Day	Dry	Not Coded
1459	0.000	12/02/15	Thu	1843	Rear-End	0	0	1	Night	Dry	Not Coded
1460	0.000	12/02/15	Thu	0912	Angle	0	0	1	Day	Dry	Not Coded
1461	0.000	12/02/15	Thu	1720	Rear-End	0	1	0	Night	Dry	Not Coded
1462	0.000	12/02/15	Thu	1735	Sideswipe	0	0	1	Night	Dry	Not Coded
1463	0.000	12/02/15	Thu	1125	Left-Turn	0	0	1	Day	Dry	Not Coded
1464	0.000	12/03/15	Fri	1800	Head-On	0	0	1	Night	Wet	Not Coded
1465	0.000	12/03/15	Fri	0825	Rear-End	0	0	1	Day	Dry	Not Coded
1466	0.000	12/03/15	Fri	0914	Angle	0	0	1	Day	Wet	Not Coded
1467	0.000	12/04/15	Sat	1515	Rear-End	0	0	1	Day	Wet	Not Coded
1468	0.000	12/04/15	Sat	1656	Rear-End	0	1	0	Day	Dry	Not Coded
1469	0.000	12/04/15	Sat	1354	Sideswipe	0	0	1	Day	Wet	Not Coded
1470	0.000	12/04/15	Sat	0541	Rear-End	0	0	1	Night	Wet	Not Coded
1471	0.000	12/05/15	Sun	0632	Backed Into	0	0	1	Night	Wet	Not Coded
1472	0.000	12/05/15	Sun	1334	Sideswipe	0	0	1	Day	Wet	Not Coded
1473	0.000	12/07/15	Tue	0855	Rear-End	0	1	0	Day	Dry	Not Coded
1474	0.000	12/07/15	Tue	1900	Rear-End	0	0	1	Night	Dry	Not Coded
1475	0.000	12/07/15	Tue	2032	Angle	0	0	1	Night	Dry	Not Coded
1476	0.000	12/07/15	Tue	1906	Angle	0	0	1	Night	Dry	Not Coded
1477	0.000	12/07/15	Tue	0754	Angle	0	0	1	Day	Wet	Not Coded
1478	0.000	12/07/15	Tue	1359	Sideswipe	0	0	1	Day	Wet	Not Coded
1479	0.000	12/07/15	Tue	1720	Rear-End	0	0	1	Night	Dry	Not Coded
1480	0.000	12/07/15	Tue	2055	Angle	0	0	1	Night	Wet	Not Coded
1481	0.000	12/08/15	Wed	1700	Parked Motor Vehicle	0	0	1	Night	Wet	Not Coded
1482	0.000	12/08/15	Wed	1644	Left-Turn	0	0	1	Day	Dry	Not Coded
1483	0.000	12/08/15	Wed	1448	Rear-End	0	0	1	Day	Wet	Not Coded
1484	0.000	12/08/15	Wed	1627	Left-Turn	0	0	1	Day	Wet	Not Coded
1485	0.000	12/08/15	Wed	2220	Rear-End	0	0	1	Night	Wet	Not Coded
1486	0.000	12/08/15	Wed	0800	Backed Into	0	0	1	Day	Dry	Not Coded
1487	0.000	12/09/15	Thu	1459	Rear-End	0	0	1	Day	Dry	Not Coded
1488	0.000	12/09/15	Thu	1858	Angle	0	0	1	Night	Dry	Not Coded
1489	0.000	12/09/15	Thu	1423	Angle	0	0	1	Day	Dry	Not Coded
1490	0.000	12/09/15	Thu	1829	Angle	0	0	1	Day	Dry	Not Coded
1491	0.000	12/09/15	Thu	1910	Rear-End	0	0	1	Night	Wet	Not Coded
1492	0.000	12/09/15	Thu	1608	Rear-End	0	0	1	Day	Dry	Not Coded
1493	0.000	12/09/15	Thu	1300	Rear-End	0	0	1	Day	Dry	Not Coded
1494	0.000	12/09/15	Thu	2210	Parked Motor Vehicle	0	0	1	Night	Dry	Not Coded
1495	0.000	12/09/15	Thu	1601	Rear-End	0	0	1	Day	Dry	Not Coded
1496	0.000	12/10/15	Fri	1450	Left-Turn	0	0	1	Day	Dry	Not Coded
1497	0.000	12/10/15	Fri	1350	Sideswipe	0	0	1	Day	Dry	Not Coded
1498	0.000	12/10/15	Fri	1946	Rear-End	0	0	1	Day	Dry	Not Coded
1499	0.000	12/10/15	Fri	1120	Sideswipe	0	0	1	Night	Dry	Not Coded
1500	0.000	12/10/15	Fri	1647	Angle	0	1	0	Day	Dry	Not Coded
1501	0.000	12/10/15	Fri	1752	Sideswipe	0	0	1	Night	Dry	Not Coded
1502	0.000	12/11/15	Sat	0825	Left-Turn	0	0	1	Day	Dry	Not Coded
1503	0.000	12/11/15	Sat	2300	Not Coded	0	1	0	Night	Dry	Not Coded
1504	0.000	12/11/15	Sat	0907	Angle	0	1	0	Day	Dry	Not Coded
1505	0.000	12/11/15	Sat	0626	Right-Turn	0	0	1	Day	Dry	Not Coded
1506	0.000	12/11/15	Sat	0930	Rear-End	0	0	1	Day	Dry	Not Coded
1507	0.000	12/11/15	Sat	1052	Rear-End	0	0	1	Day	Dry	Not Coded
1508	0.000	12/11/15	Sat	1230	Head-On	0	0	1	Day	Dry	Not Coded
1509	0.000	12/12/15	Sun	1335	Left-Turn	0	0	1	Day	Dry	Not Coded
1510	0.000	12/12/15	Sun	1125	Rear-End	0	0	1	Day	Dry	Not Coded
1511	0.000	12/12/15	Sun	0950	Rear-End	0	0	1	Day	Dry	Not Coded
1512	0.000	12/12/15	Sun	1222	Rear-End	0	0	1	Day	Dry	Not Coded
1513	0.000	12/13/15	Mon	1440	Sideswipe	0	0	1	Day	Dry	Not Coded
1514	0.000	12/13/15	Mon	1143	Rear-End	0	0	1	Day	Dry	Not Coded
1515	0.000	12/13/15	Mon	2122	Angle	0	0	1	Night	Dry	Not Coded
1516	0.000	12/14/15	Tue	2200	Sideswipe	0	0	1	Night	Dry	Not Coded
1517	0.000	12/14/15	Tue	1210	Parked Motor Vehicle	0	0	1	Day	Dry	Not Coded
1518	0.000	12/15/15	Wed	1130	Parked Motor Vehicle	0	0	1	Day	Dry	Not Coded

State of Florida Department of Transportation
CRASH SUMMARY

SECTION: Ludlam Trail Corridor f — STATE ROUTE: #N/A
ROADWAY LIMITS: 0 — M.P. 0.000 TO 0.000 — ENGINEER: 0
STUDY PERIOD: FROM 1/ 2015 TO 12/ 2015 — COUNTY: Miami-Dade

No.	MILE POST	DATE	DAY	TIME	CRASH TYPE	FATAL	INJURIES	PROP DAM	DAY / NIGHT	WET / DRY	CONTRIBUTING CAUSE (VEHICLE ONLY)
1519	0.000	12/15/15	Wed	1635	Right-Turn	0	0	1	Day	Dry	Not Coded
1520	0.000	12/15/15	Wed	0732	Angle	0	0	1	Day	Dry	Not Coded
1521	0.000	12/15/15	Wed	1443	Angle	0	0	1	Day	Dry	Not Coded
1522	0.000	12/15/15	Wed	1440	Rear-End	0	1	0	Day	Dry	Not Coded
1523	0.000	12/15/15	Wed	1838	Rear-End	0	0	1	Day	Dry	Not Coded
1524	0.000	12/15/15	Wed	1410	Right-Turn	0	0	1	Day	Dry	Not Coded
1525	0.000	12/15/15	Wed	1833	Rear-End	0	1	0	Night	Dry	Not Coded
1526	0.000	12/16/15	Thu	1540	Angle	0	0	1	Day	Dry	Not Coded
1527	0.000	12/16/15	Thu	1006	Left-Turn	0	0	1	Day	Dry	Not Coded
1528	0.000	12/16/15	Thu	2200	Angle	0	1	0	Night	Dry	Not Coded
1529	0.000	12/16/15	Thu	1750	Rear-End	0	0	1	Night	Dry	Not Coded
1530	0.000	12/16/15	Thu	1814	Rear-End	0	0	1	Night	Dry	Not Coded
1531	0.000	12/16/15	Thu	0810	Angle	0	0	1	Day	Dry	Not Coded
1532	0.000	12/16/15	Thu	1149	Right-Turn	0	0	1	Day	Dry	Not Coded
1533	0.000	12/16/15	Thu	1859	Rear-End	0	0	1	Night	Dry	Not Coded
1534	0.000	12/17/15	Fri	2120	Angle	0	1	0	Night	Dry	Not Coded
1535	0.000	12/17/15	Fri	2140	Angle	0	0	1	Night	Dry	Not Coded
1536	0.000	12/17/15	Fri	0758	Sideswipe	0	1	0	Day	Dry	Not Coded
1537	0.000	12/17/15	Fri	2325	Left-Turn	0	0	1	Night	Dry	Not Coded
1538	0.000	12/18/15	Sat	1905	Rear-End	0	0	1	Unknown	Dry	Not Coded
1539	0.000	12/18/15	Sat	1018	Not Coded	0	0	1	Day	Dry	Not Coded
1540	0.000	12/18/15	Sat	1745	Left-Turn	0	1	0	Night	Dry	Not Coded
1541	0.000	12/18/15	Sat	1126	Sideswipe	0	1	0	Day	Dry	Not Coded
1542	0.000	12/19/15	Sun	1349	Left-Turn	0	0	1	Day	Dry	Not Coded
1543	0.000	12/19/15	Sun	2000	Rear-End	0	0	1	Night	Dry	Not Coded
1544	0.000	12/20/15	Mon	1435	Pedalcycle	0	0	1	Day	Dry	Not Coded
1545	0.000	12/20/15	Mon	2045	Left-Turn	0	1	0	Night	Wet	Not Coded
1546	0.000	12/20/15	Mon	1930	Angle	0	0	1	Night	Dry	Not Coded
1547	0.000	12/21/15	Tue	1255	Sideswipe	0	0	1	Day	Dry	Not Coded
1548	0.000	12/21/15	Tue	1813	Left-Turn	0	0	1	Night	Dry	Not Coded
1549	0.000	12/21/15	Tue	0858	Rear-End	0	0	1	Day	Dry	Not Coded
1550	0.000	12/22/15	Wed	0601	Sideswipe	0	0	1	Night	Dry	Not Coded
1551	0.000	12/22/15	Wed	2027	Rear-End	0	0	1	Day	Dry	Not Coded
1552	0.000	12/22/15	Wed	1603	Angle	0	0	1	Day	Dry	Not Coded
1553	0.000	12/22/15	Wed	2107	Angle	0	0	1	Night	Dry	Not Coded
1554	0.000	12/22/15	Wed	1722	Rear-End	0	1	0	Day	Wet	Not Coded
1555	0.000	12/22/15	Wed	1605	Left-Turn	0	0	1	Day	Dry	Not Coded
1556	0.000	12/23/15	Thu	0003	Not Coded	0	0	1	Night	Dry	Not Coded
1557	0.000	12/23/15	Thu	1715	Sideswipe	0	0	1	Day	Dry	Not Coded
1558	0.000	12/23/15	Thu	1523	Sideswipe	0	0	1	Day	Dry	Not Coded
1559	0.000	12/23/15	Thu	1831	Left-Turn	0	0	1	Night	Dry	Not Coded
1560	0.000	12/23/15	Thu	1025	Left-Turn	0	0	1	Day	Dry	Not Coded
1561	0.000	12/23/15	Thu	1725	Not Coded	0	0	1	Day	Dry	Not Coded
1562	0.000	12/24/15	Fri	1720	Rear-End	0	0	1	Day	Dry	Not Coded
1563	0.000	12/24/15	Fri	1909	Angle	0	1	0	Night	Dry	Not Coded
1564	0.000	12/24/15	Fri	1110	Rear-End	0	0	1	Day	Dry	Not Coded
1565	0.000	12/25/15	Sat	1846	Angle	0	0	1	Night	Dry	Not Coded
1566	0.000	12/25/15	Sat	0338	Angle	0	0	1	Night	Dry	Not Coded
1567	0.000	12/26/15	Sun	1047	Rear-End	0	0	1	Day	Dry	Not Coded
1568	0.000	12/26/15	Sun	1341	Rear-End	0	1	0	Day	Dry	Not Coded
1569	0.000	12/26/15	Sun	1847	Sideswipe	0	0	1	Day	Dry	Not Coded
1570	0.000	12/26/15	Sun	1935	Backed Into	0	0	1	Night	Dry	Not Coded
1571	0.000	12/27/15	Mon	1303	Rear-End	0	0	1	Day	Dry	Not Coded
1572	0.000	12/27/15	Mon	0010	Rear-End	0	0	1	Night	Dry	Not Coded
1573	0.000	12/28/15	Tue	1525	Left-Turn	0	0	1	Day	Dry	Not Coded
1574	0.000	12/28/15	Tue	1153	Head-On	0	0	1	Day	Dry	Not Coded
1575	0.000	12/28/15	Tue	1855	Sideswipe	0	0	1	Day	Dry	Not Coded
1576	0.000	12/28/15	Tue	1151	Left-Turn	0	0	1	Day	Dry	Not Coded
1577	0.000	12/28/15	Tue	1820	Rear-End	0	1	0	Night	Dry	Not Coded
1578	0.000	12/28/15	Tue	1914	Sideswipe	0	0	1	Night	Dry	Not Coded
1579	0.000	12/29/15	Wed	2011	Right-Turn	0	0	1	Night	Dry	Not Coded
1580	0.000	12/29/15	Wed	1710	Angle	0	1	0	Night	Dry	Not Coded
1581	0.000	12/29/15	Wed	0915	Rear-End	0	0	1	Day	Dry	Not Coded
1582	0.000	12/29/15	Wed	1005	Sideswipe	0	1	0	Day	Dry	Not Coded
1583	0.000	12/30/15	Thu	1735	Backed Into	0	0	1	Day	Dry	Not Coded
1584	0.000	12/31/15	Fri	0755	Left-Turn	0	0	1	Day	Dry	Not Coded
1585	0.000	12/31/15	Fri	1900	Rear-End	0	0	1	Night	Dry	Not Coded
1586	0.000	12/31/15	Fri	1136	Sideswipe	0	1	0	Day	Dry	Not Coded
1587	0.000	12/31/15	Fri	1140	Overturn/Rollover	0	0	1	Day	Dry	Not Coded

State of Florida Department of Transportation
CRASH SUMMARY

SECTION: **Ludlam Trail Corridor f** STATE ROUTE: **#N/A**

ROADWAY LIMITS: **0** M.P. **0.000** TO **0.000** ENGINEER: **0**

STUDY PERIOD: FROM **1/ 2015** TO **12/ 2015** COUNTY: **Miami-Dade**

No.	MILE POST	DATE	DAY	TIME	CRASH TYPE	FATAL	INJURIES	PROP DAM	DAY / NIGHT	WET / DRY	CONTRIBUTING CAUSE (VEHICLE ONLY)
1588	0.000	12/31/15	Fri	0700	Left-Turn	0	1	0	Day	Dry	Not Coded

Total No.	Fatal	Injury	PDO	Rear-End	Head-On	Angle	Left-Turn	Right-Turn	Sideswipe	Backed Into	Ped/Bike	Parked Car	Fixed Object	Ran into Water	Other
1588	**2**	**239**	**1347**	**617**	**17**	**280**	**241**	**49**	**209**	**49**	**19**	**36**	**17**	**0**	**36**
Percent	*0.13%*	*15.05%*	*84.82%*	*38.85%*	*1.07%*	*17.63%*	*15.18%*	*3.09%*	*13.16%*	*3.09%*	*1.20%*	*2.27%*	*1.07%*	*0.00%*	*2.27%*

State of Florida Department of Transportation
CRASH SUMMARY

SECTION: Ludlam Trail Corridor f | STATE ROUTE: #N/A
ROADWAY LIMITS: 0 | M.P. 0.000 TO 0.000 | ENGINEER: 0
STUDY PERIOD: FROM 1/ 2016 TO 12/ 2016 | COUNTY: Miami-Dade

No.	MILE POST	DATE	DAY	TIME	CRASH TYPE	FATAL	INJURIES	PROP DAM	DAY / NIGHT	WET / DRY	CONTRIBUTING CAUSE (VEHICLE ONLY)
1	0.000	01/01/16	Sat	1555	Sideswipe	0	0	1	Day	Dry	Not Coded
2	0.000	01/01/16	Sat	0014	Rear-End	0	0	1	Night	Dry	Not Coded
3	0.000	01/01/16	Sat	1704	Rear-End	0	0	1	Day	Dry	Not Coded
4	0.000	01/01/16	Sat	1459	Angle	0	0	1	Day	Dry	Not Coded
5	0.000	01/02/16	Sun	0729	Backed Into	0	0	1	Day	Dry	Not Coded
6	0.000	01/02/16	Sun	1236	Sideswipe	0	0	1	Day	Dry	Not Coded
7	0.000	01/03/16	Mon	1732	Rear-End	0	1	0	Day	Wet	Not Coded
8	0.000	01/03/16	Mon	1738	Rear-End	0	0	1	Night	Wet	Not Coded
9	0.000	01/04/16	Tue	1427	Parked Motor Vehicle	0	0	1	Day	Dry	Not Coded
10	0.000	01/04/16	Tue	1200	Backed Into	0	1	0	Day	Dry	Not Coded
11	0.000	01/04/16	Tue	1629	Angle	0	0	1	Day	Dry	Not Coded
12	0.000	01/04/16	Tue	1043	Rear-End	0	0	1	Day	Wet	Not Coded
13	0.000	01/04/16	Tue	0837	Sideswipe	0	0	1	Day	Wet	Not Coded
14	0.000	01/05/16	Wed	1742	Angle	0	0	1	Night	Dry	Not Coded
15	0.000	01/05/16	Wed	1540	Left-Turn	0	0	1	Day	Dry	Not Coded
16	0.000	01/05/16	Wed	0756	Rear-End	0	0	1	Day	Dry	Not Coded
17	0.000	01/05/16	Wed	1536	Angle	0	0	1	Day	Dry	Not Coded
18	0.000	01/05/16	Wed	1536	Left-Turn	0	0	1	Day	Dry	Not Coded
19	0.000	01/05/16	Wed	1749	Sideswipe	0	0	1	Night	Dry	Not Coded
20	0.000	01/05/16	Wed	1700	Rear-End	0	0	1	Day	Dry	Not Coded
21	0.000	01/06/16	Thu	1920	Left-Turn	0	1	0	Night	Wet	Not Coded
22	0.000	01/06/16	Thu	0845	Sideswipe	0	0	1	Day	Dry	Not Coded
23	0.000	01/06/16	Thu	1103	Left-Turn	0	0	1	Day	Wet	Not Coded
24	0.000	01/07/16	Fri	1423	Angle	0	0	1	Day	Dry	Not Coded
25	0.000	01/07/16	Fri	0000	Rear-End	0	1	0	Day	Dry	Not Coded
26	0.000	01/07/16	Fri	1651	Angle	0	1	0	Day	Dry	Not Coded
27	0.000	01/07/16	Fri	1400	Not Coded	0	0	1	Day	Dry	Not Coded
28	0.000	01/07/16	Fri	0845	Rear-End	0	0	1	Day	Dry	Not Coded
29	0.000	01/07/16	Fri	1908	Rear-End	0	0	1	Day	Dry	Not Coded
30	0.000	01/07/16	Fri	1023	Rear-End	0	0	1	Day	Dry	Not Coded
31	0.000	01/07/16	Fri	1945	Right-Turn	0	0	1	Night	Dry	Not Coded
32	0.000	01/07/16	Fri	0800	Sideswipe	0	0	1	Day	Dry	Not Coded
33	0.000	01/07/16	Fri	1230	Backed Into	0	0	1	Day	Dry	Not Coded
34	0.000	01/08/16	Sat	1633	Rear-End	0	0	1	Day	Dry	Not Coded
35	0.000	01/08/16	Sat	1500	Angle	0	0	1	Day	Dry	Not Coded
36	0.000	01/09/16	Sun	1400	Rear-End	0	0	1	Day	Dry	Not Coded
37	0.000	01/09/16	Sun	1855	Sideswipe	0	1	0	Day	Dry	Not Coded
38	0.000	01/09/16	Sun	1214	Backed Into	0	0	1	Day	Dry	Not Coded
39	0.000	01/09/16	Sun	1301	Sideswipe	0	0	1	Day	Dry	Not Coded
40	0.000	01/09/16	Sun	1519	Rear-End	0	0	1	Day	Dry	Not Coded
41	0.000	01/09/16	Sun	1453	Parked Motor Vehicle	0	0	1	Day	Dry	Not Coded
42	0.000	01/09/16	Sun	0937	Left-Turn	0	0	1	Day	Dry	Not Coded
43	0.000	01/10/16	Mon	1219	Rear-End	0	0	1	Day	Wet	Not Coded
44	0.000	01/11/16	Tue	1211	Rear-End	0	0	1	Day	Dry	Not Coded
45	0.000	01/11/16	Tue	0645	Angle	0	0	1	Day	Dry	Not Coded
46	0.000	01/11/16	Tue	1744	Rear-End	0	0	1	Night	Dry	Not Coded
47	0.000	01/11/16	Tue	1910	Left-Turn	0	0	1	Night	Dry	Not Coded
48	0.000	01/11/16	Tue	1640	Right-Turn	0	0	1	Day	Dry	Not Coded
49	0.000	01/11/16	Tue	1545	Rear-End	0	0	1	Day	Dry	Not Coded
50	0.000	01/11/16	Tue	1335	Rear-End	0	0	1	Day	Dry	Not Coded
51	0.000	01/12/16	Wed	1604	Sideswipe	0	1	0	Day	Dry	Not Coded
52	0.000	01/12/16	Wed	0905	Left-Turn	0	0	1	Day	Wet	Not Coded
53	0.000	01/12/16	Wed	1144	Rear-End	0	0	1	Day	Wet	Not Coded
54	0.000	01/13/16	Thu	1732	Rear-End	0	0	1	Day	Dry	Not Coded
55	0.000	01/13/16	Thu	1123	Angle	0	0	1	Day	Dry	Not Coded
56	0.000	01/13/16	Thu	2137	Left-Turn	0	0	1	Day	Dry	Not Coded
57	0.000	01/13/16	Thu	1838	Left-Turn	0	0	1	Night	Dry	Not Coded
58	0.000	01/13/16	Thu	1441	Rear-End	0	1	0	Day	Dry	Not Coded
59	0.000	01/13/16	Thu	0702	Angle	0	0	1	Day	Dry	Not Coded
60	0.000	01/13/16	Thu	1829	Angle	0	0	1	Day	Dry	Not Coded
61	0.000	01/14/16	Fri	1737	Rear-End	0	0	1	Night	Dry	Not Coded
62	0.000	01/14/16	Fri	1729	Sideswipe	0	0	1	Day	Dry	Not Coded
63	0.000	01/14/16	Fri	1849	Angle	0	0	1	Night	Wet	Not Coded
64	0.000	01/14/16	Fri	2335	Left-Turn	0	0	1	Night	Dry	Not Coded
65	0.000	01/14/16	Fri	1743	Rear-End	0	0	1	Night	Dry	Not Coded
66	0.000	01/14/16	Fri	1548	Rear-End	0	0	1	Day	Wet	Not Coded
67	0.000	01/14/16	Fri	1935	Sideswipe	0	1	0	Night	Wet	Not Coded
68	0.000	01/14/16	Fri	2207	Angle	0	0	1	Night	Wet	Not Coded
69	0.000	01/15/16	Sat	1625	Angle	0	0	1	Day	Wet	Not Coded

State of Florida Department of Transportation
CRASH SUMMARY

SECTION: Ludlam Trail Corridor f — STATE ROUTE: #N/A
ROADWAY LIMITS: 0 — M.P. 0.000 TO 0.000 — ENGINEER: 0
STUDY PERIOD: FROM 1/ 2016 TO 12/ 2016 — COUNTY: Miami-Dade

No.	MILE POST	DATE	DAY	TIME	CRASH TYPE	FATAL	INJURIES	PROP DAM	DAY / NIGHT	WET / DRY	CONTRIBUTING CAUSE (VEHICLE ONLY)
70	0.000	01/15/16	Sat	1813	Left-Turn	0	0	1	Night	Dry	Not Coded
71	0.000	01/15/16	Sat	0820	Backed Into	0	0	1	Day	Wet	Not Coded
72	0.000	01/15/16	Sat	0836	Sideswipe	0	0	1	Day	Wet	Not Coded
73	0.000	01/15/16	Sat	0915	Rear-End	0	0	1	Day	Wet	Not Coded
74	0.000	01/15/16	Sat	1110	Rear-End	0	0	1	Day	Wet	Not Coded
75	0.000	01/15/16	Sat	0714	Pedestrian	0	0	1	Day	Wet	Not Coded
76	0.000	01/15/16	Sat	1911	Rear-End	0	0	1	Night	Wet	Not Coded
77	0.000	01/15/16	Sat	1037	Sideswipe	0	0	1	Day	Wet	Not Coded
78	0.000	01/15/16	Sat	1430	Rear-End	0	0	1	Day	Wet	Not Coded
79	0.000	01/16/16	Sun	1127	Angle	0	0	1	Day	Dry	Not Coded
80	0.000	01/16/16	Sun	1521	Sideswipe	0	0	1	Day	Dry	Not Coded
81	0.000	01/16/16	Sun	1745	Rear-End	0	0	1	Night	Dry	Not Coded
82	0.000	01/16/16	Sun	1745	Left-Turn	0	0	1	Night	Dry	Not Coded
83	0.000	01/16/16	Sun	2053	Rear-End	0	0	1	Night	Dry	Not Coded
84	0.000	01/17/16	Mon	2142	Sideswipe	0	0	1	Night	Dry	Not Coded
85	0.000	01/17/16	Mon	0145	Rear-End	0	0	1	Night	Dry	Not Coded
86	0.000	01/17/16	Mon	1357	Right-Turn	0	0	1	Day	Dry	Not Coded
87	0.000	01/17/16	Mon	1930	Angle	0	0	1	Night	Dry	Not Coded
88	0.000	01/17/16	Mon	1459	Sideswipe	0	0	1	Day	Dry	Not Coded
89	0.000	01/17/16	Mon	0827	Angle	0	0	1	Day	Wet	Not Coded
90	0.000	01/18/16	Tue	1805	Sideswipe	0	0	1	Day	Dry	Not Coded
91	0.000	01/18/16	Tue	1615	Rear-End	0	0	1	Day	Dry	Not Coded
92	0.000	01/18/16	Tue	2253	Angle	0	1	0	Night	Dry	Not Coded
93	0.000	01/19/16	Wed	1935	Angle	0	0	1	Night	Dry	Not Coded
94	0.000	01/19/16	Wed	1220	Rear-End	0	0	1	Day	Dry	Not Coded
95	0.000	01/19/16	Wed	1615	Rear-End	0	0	1	Day	Dry	Not Coded
96	0.000	01/19/16	Wed	0824	Sideswipe	0	0	1	Day	Dry	Not Coded
97	0.000	01/19/16	Wed	1551	Rear-End	0	0	1	Day	Dry	Not Coded
98	0.000	01/20/16	Thu	0910	Rear-End	0	0	1	Day	Dry	Not Coded
99	0.000	01/20/16	Thu	1630	Rear-End	0	0	1	Day	Dry	Not Coded
100	0.000	01/20/16	Thu	1730	Rear-End	0	0	1	Day	Dry	Not Coded
101	0.000	01/20/16	Thu	1413	Rear-End	0	0	1	Day	Dry	Not Coded
102	0.000	01/20/16	Thu	1939	Angle	0	0	1	Day	Dry	Not Coded
103	0.000	01/21/16	Fri	0840	Angle	0	0	1	Day	Dry	Not Coded
104	0.000	01/21/16	Fri	1145	Angle	0	0	1	Day	Dry	Not Coded
105	0.000	01/21/16	Fri	1135	Angle	0	0	1	Day	Dry	Not Coded
106	0.000	01/22/16	Sat	1507	Rear-End	0	0	1	Day	Wet	Not Coded
107	0.000	01/22/16	Sat	1330	Rear-End	0	1	0	Day	Wet	Not Coded
108	0.000	01/22/16	Sat	1509	Left-Turn	0	0	1	Day	Wet	Not Coded
109	0.000	01/22/16	Sat	0944	Rear-End	0	0	1	Day	Wet	Not Coded
110	0.000	01/22/16	Sat	1501	Left-Turn	0	0	1	Day	Wet	Not Coded
111	0.000	01/22/16	Sat	1517	Angle	0	0	1	Day	Dry	Not Coded
112	0.000	01/23/16	Sun	1437	Rear-End	0	0	1	Day	Dry	Not Coded
113	0.000	01/23/16	Sun	1841	Rear-End	0	0	1	Night	Dry	Not Coded
114	0.000	01/23/16	Sun	0625	Rear-End	0	1	0	Night	Dry	Not Coded
115	0.000	01/23/16	Sun	1100	Rear-End	0	0	1	Day	Dry	Not Coded
116	0.000	01/24/16	Mon	1743	Rear-End	0	0	1	Night	Dry	Not Coded
117	0.000	01/24/16	Mon	1332	Left-Turn	0	1	0	Day	Dry	Not Coded
118	0.000	01/24/16	Mon	1640	Left-Turn	0	0	1	Day	Dry	Not Coded
119	0.000	01/24/16	Mon	2310	Rear-End	0	0	1	Night	Dry	Not Coded
120	0.000	01/25/16	Tue	2240	Rear-End	0	0	1	Night	Dry	Not Coded
121	0.000	01/25/16	Tue	1745	Rear-End	0	0	1	Day	Dry	Not Coded
122	0.000	01/25/16	Tue	1433	Angle	0	1	0	Day	Dry	Not Coded
123	0.000	01/25/16	Tue	0810	Sideswipe	0	0	1	Day	Dry	Not Coded
124	0.000	01/26/16	Wed	0847	Left-Turn	0	0	1	Day	Dry	Not Coded
125	0.000	01/26/16	Wed	1842	Rear-End	0	0	1	Night	Dry	Not Coded
126	0.000	01/26/16	Wed	1740	Rear-End	0	0	1	Night	Dry	Not Coded
127	0.000	01/26/16	Wed	1737	Rear-End	0	0	1	Day	Dry	Not Coded
128	0.000	01/26/16	Wed	1747	Rear-End	0	0	1	Night	Dry	Not Coded
129	0.000	01/26/16	Wed	1736	Angle	0	0	1	Night	Dry	Not Coded
130	0.000	01/27/16	Thu	1847	Left-Turn	0	0	1	Night	Wet	Not Coded
131	0.000	01/27/16	Thu	0950	Rear-End	0	0	1	Day	Dry	Not Coded
132	0.000	01/27/16	Thu	1825	Left-Turn	0	0	1	Night	Wet	Not Coded
133	0.000	01/27/16	Thu	1112	Left-Turn	0	1	0	Day	Dry	Not Coded
134	0.000	01/27/16	Thu	2205	Sideswipe	0	0	1	Night	Wet	Not Coded
135	0.000	01/27/16	Thu	1854	Angle	0	0	1	Night	Wet	Not Coded
136	0.000	01/28/16	Fri	0654	Angle	0	0	1	Night	Wet	Not Coded
137	0.000	01/28/16	Fri	2050	Left-Turn	0	0	1	Night	Wet	Not Coded
138	0.000	01/28/16	Fri	0730	Rear-End	0	0	1	Day	Wet	Not Coded

State of Florida Department of Transportation
CRASH SUMMARY

SECTION: Ludlam Trail Corridor f — STATE ROUTE: #N/A
ROADWAY LIMITS: 0 — M.P. 0.000 TO 0.000 — ENGINEER: 0
STUDY PERIOD: FROM 1/ 2016 TO 12/ 2016 — COUNTY: Miami-Dade

No.	MILE POST	DATE	DAY	TIME	CRASH TYPE	FATAL	INJURIES	PROP DAM	DAY / NIGHT	WET / DRY	CONTRIBUTING CAUSE (VEHICLE ONLY)
139	0.000	01/28/16	Fri	1924	Angle	0	1	0	Night	Wet	Not Coded
140	0.000	01/29/16	Sat	0032	Not Coded	0	0	1	Night	Wet	Not Coded
141	0.000	01/29/16	Sat	1741	Rear-End	0	0	1	Night	Dry	Not Coded
142	0.000	01/29/16	Sat	1920	Angle	0	0	1	Night	Dry	Not Coded
143	0.000	01/29/16	Sat	1006	Left-Turn	0	1	0	Day	Dry	Not Coded
144	0.000	01/29/16	Sat	2020	Left-Turn	0	0	1	Night	Dry	Not Coded
145	0.000	01/29/16	Sat	1155	Left-Turn	0	0	1	Day	Dry	Not Coded
146	0.000	01/30/16	Sun	2315	Sideswipe	0	0	1	Night	Dry	Not Coded
147	0.000	01/31/16	Mon	1433	Rear-End	0	0	1	Day	Dry	Not Coded
148	0.000	02/01/16	Tue	1940	Rear-End	0	0	1	Night	Wet	Not Coded
149	0.000	02/01/16	Tue	0848	Rear-End	0	1	0	Day	Wet	Not Coded
150	0.000	02/01/16	Tue	0920	Rear-End	0	1	0	Day	Wet	Not Coded
151	0.000	02/01/16	Tue	1355	Not Coded	0	1	0	Day	Wet	Not Coded
152	0.000	02/01/16	Tue	1350	Left-Turn	0	0	1	Day	Dry	Not Coded
153	0.000	02/01/16	Tue	0931	Rear-End	0	0	1	Day	Wet	Not Coded
154	0.000	02/01/16	Tue	2055	Rear-End	0	0	1	Day	Dry	Not Coded
155	0.000	02/02/16	Wed	0955	Rear-End	0	0	1	Day	Dry	Not Coded
156	0.000	02/02/16	Wed	1845	Backed Into	0	0	1	Night	Dry	Not Coded
157	0.000	02/02/16	Wed	0918	Rear-End	0	0	1	Day	Dry	Not Coded
158	0.000	02/02/16	Wed	1400	Left-Turn	0	1	0	Day	Dry	Not Coded
159	0.000	02/02/16	Wed	1325	Right-Turn	0	0	1	Day	Dry	Not Coded
160	0.000	02/02/16	Wed	1507	Left-Turn	0	0	1	Day	Dry	Not Coded
161	0.000	02/02/16	Wed	1206	Sideswipe	0	0	1	Day	Dry	Not Coded
162	0.000	02/02/16	Wed	1309	Not Coded	0	0	1	Day	Dry	Not Coded
163	0.000	02/02/16	Wed	1027	Backed Into	0	1	0	Day	Dry	Not Coded
164	0.000	02/02/16	Wed	0735	Left-Turn	0	0	1	Day	Wet	Not Coded
165	0.000	02/03/16	Thu	1050	Sideswipe	0	0	1	Day	Dry	Not Coded
166	0.000	02/03/16	Thu	1255	Angle	0	0	1	Day	Dry	Not Coded
167	0.000	02/03/16	Thu	0921	Rear-End	0	0	1	Day	Dry	Not Coded
168	0.000	02/03/16	Thu	0728	Not Coded	0	0	1	Day	Dry	Not Coded
169	0.000	02/03/16	Thu	2246	Angle	0	0	1	Night	Dry	Not Coded
170	0.000	02/04/16	Fri	0030	Rear-End	0	0	1	Night	Dry	Not Coded
171	0.000	02/04/16	Fri	1350	Angle	0	0	1	Day	Dry	Not Coded
172	0.000	02/04/16	Fri	1528	Curb	0	0	1	Day	Dry	Not Coded
173	0.000	02/05/16	Sat	1418	Left-Turn	0	0	1	Day	Dry	Not Coded
174	0.000	02/05/16	Sat	1430	Animal	0	0	1	Day	Dry	Not Coded
175	0.000	02/05/16	Sat	1355	Other Fixed Object	0	1	0	Day	Dry	Not Coded
176	0.000	02/05/16	Sat	2124	Sideswipe	0	0	1	Day	Dry	Not Coded
177	0.000	02/05/16	Sat	1313	Rear-End	0	0	1	Day	Dry	Not Coded
178	0.000	02/06/16	Sun	1415	Rear-End	0	0	1	Day	Dry	Not Coded
179	0.000	02/06/16	Sun	1601	Left-Turn	0	0	1	Day	Dry	Not Coded
180	0.000	02/06/16	Sun	2008	Left-Turn	0	0	1	Night	Wet	Not Coded
181	0.000	02/06/16	Sun	0640	Angle	0	0	1	Day	Dry	Not Coded
182	0.000	02/06/16	Sun	2042	Rear-End	0	0	1	Night	Wet	Not Coded
183	0.000	02/07/16	Mon	1525	Sideswipe	0	0	1	Day	Dry	Not Coded
184	0.000	02/08/16	Tue	0854	Angle	0	0	1	Day	Dry	Not Coded
185	0.000	02/08/16	Tue	0713	Angle	0	0	1	Day	Dry	Not Coded
186	0.000	02/08/16	Tue	1835	Not Coded	0	0	1	Night	Dry	Not Coded
187	0.000	02/08/16	Tue	1427	Sideswipe	0	0	1	Day	Dry	Not Coded
188	0.000	02/08/16	Tue	1540	Rear-End	0	0	1	Day	Dry	Not Coded
189	0.000	02/08/16	Tue	1826	Angle	0	0	1	Night	Dry	Not Coded
190	0.000	02/08/16	Tue	0614	Pedestrian	0	0	1	Night	Dry	Not Coded
191	0.000	02/09/16	Wed	0952	Left-Turn	0	1	0	Day	Dry	Not Coded
192	0.000	02/09/16	Wed	0503	Angle	0	0	1	Unknown	Other	Not Coded
193	0.000	02/09/16	Wed	1512	Rear-End	0	0	1	Day	Dry	Not Coded
194	0.000	02/09/16	Wed	1556	Rear-End	0	0	1	Day	Dry	Not Coded
195	0.000	02/09/16	Wed	1851	Left-Turn	0	1	0	Night	Dry	Not Coded
196	0.000	02/09/16	Wed	1612	Angle	0	0	1	Day	Dry	Not Coded
197	0.000	02/09/16	Wed	1600	Rear-End	0	0	1	Day	Dry	Not Coded
198	0.000	02/10/16	Thu	1730	Left-Turn	0	0	1	Day	Dry	Not Coded
199	0.000	02/10/16	Thu	1207	Sideswipe	0	0	1	Day	Dry	Not Coded
200	0.000	02/10/16	Thu	1944	Left-Turn	0	0	1	Night	Dry	Not Coded
201	0.000	02/11/16	Fri	1705	Rear-End	0	1	0	Day	Dry	Not Coded
202	0.000	02/11/16	Fri	1600	Right-Turn	0	0	1	Day	Dry	Not Coded
203	0.000	02/11/16	Fri	0825	Angle	0	0	1	Day	Dry	Not Coded
204	0.000	02/11/16	Fri	1723	Parked Motor Vehicle	0	0	1	Night	Dry	Not Coded
205	0.000	02/11/16	Fri	1217	Rear-End	0	1	0	Day	Dry	Not Coded
206	0.000	02/11/16	Fri	1459	Left-Turn	0	0	1	Day	Dry	Not Coded
207	0.000	02/11/16	Fri	0851	Angle	0	0	1	Day	Dry	Not Coded

State of Florida Department of Transportation
CRASH SUMMARY

SECTION: Ludlam Trail Corridor f — STATE ROUTE: #N/A
ROADWAY LIMITS: 0 — M.P. 0.000 TO 0.000 — ENGINEER: 0
STUDY PERIOD: FROM 1/ 2016 TO 12/ 2016 — COUNTY: Miami-Dade

No.	MILE POST	DATE	DAY	TIME	CRASH TYPE	FATAL	INJURIES	PROP DAM	DAY / NIGHT	WET / DRY	CONTRIBUTING CAUSE (VEHICLE ONLY)
208	0.000	02/12/16	Sat	2240	Rear-End	0	0	1	Night	Dry	Not Coded
209	0.000	02/12/16	Sat	1330	Left-Turn	0	0	1	Day	Dry	Not Coded
210	0.000	02/12/16	Sat	2023	Rear-End	0	0	1	Day	Dry	Not Coded
211	0.000	02/12/16	Sat	1250	Right-Turn	0	0	1	Day	Dry	Not Coded
212	0.000	02/12/16	Sat	1707	Not Coded	0	0	1	Day	Dry	Not Coded
213	0.000	02/13/16	Sun	0630	Right-Turn	0	0	1	Night	Dry	Not Coded
214	0.000	02/15/16	Tue	1346	Angle	0	0	1	Day	Dry	Not Coded
215	0.000	02/15/16	Tue	1339	Rear-End	0	0	1	Day	Dry	Not Coded
216	0.000	02/15/16	Tue	1250	Left-Turn	0	0	1	Day	Wet	Not Coded
217	0.000	02/15/16	Tue	1250	Backed Into	0	0	1	Day	Wet	Not Coded
218	0.000	02/16/16	Wed	1420	Rear-End	0	0	1	Day	Dry	Not Coded
219	0.000	02/16/16	Wed	1732	Sideswipe	0	0	1	Day	Dry	Not Coded
220	0.000	02/16/16	Wed	0843	Rear-End	0	0	1	Day	Dry	Not Coded
221	0.000	02/16/16	Wed	1610	Rear-End	0	0	1	Day	Dry	Not Coded
222	0.000	02/17/16	Thu	1616	Rear-End	0	0	1	Day	Dry	Not Coded
223	0.000	02/17/16	Thu	1659	Rear-End	0	1	0	Day	Dry	Not Coded
224	0.000	02/17/16	Thu	1553	Sideswipe	0	0	1	Day	Dry	Not Coded
225	0.000	02/17/16	Thu	1230	Rear-End	0	0	1	Day	Dry	Not Coded
226	0.000	02/18/16	Fri	1250	Angle	0	0	1	Day	Dry	Not Coded
227	0.000	02/18/16	Fri	1520	Right-Turn	0	0	1	Day	Dry	Not Coded
228	0.000	02/18/16	Fri	0804	Angle	0	0	1	Day	Dry	Not Coded
229	0.000	02/18/16	Fri	0950	Right-Turn	0	0	1	Day	Dry	Not Coded
230	0.000	02/18/16	Fri	1701	Rear-End	0	0	1	Day	Dry	Not Coded
231	0.000	02/18/16	Fri	0820	Rear-End	0	0	1	Day	Dry	Not Coded
232	0.000	02/19/16	Sat	1840	Rear-End	0	0	1	Night	Dry	Not Coded
233	0.000	02/19/16	Sat	1200	Left-Turn	0	0	1	Day	Dry	Not Coded
234	0.000	02/19/16	Sat	1048	Rear-End	0	0	1	Day	Dry	Not Coded
235	0.000	02/19/16	Sat	1740	Sideswipe	0	0	1	Night	Dry	Not Coded
236	0.000	02/20/16	Sun	1257	Angle	0	0	1	Day	Dry	Not Coded
237	0.000	02/20/16	Sun	1505	Angle	0	0	1	Day	Dry	Not Coded
238	0.000	02/20/16	Sun	1234	Left-Turn	0	1	0	Day	Dry	Not Coded
239	0.000	02/21/16	Mon	1930	Rear-End	0	0	1	Night	Dry	Not Coded
240	0.000	02/21/16	Mon	2245	Rear-End	0	0	1	Night	Dry	Not Coded
241	0.000	02/21/16	Mon	2135	Rear-End	0	0	1	Night	Dry	Not Coded
242	0.000	02/21/16	Mon	0950	Rear-End	0	0	1	Day	Dry	Not Coded
243	0.000	02/22/16	Tue	1627	Left-Turn	0	0	1	Day	Dry	Not Coded
244	0.000	02/22/16	Tue	2350	Rear-End	0	0	1	Night	Dry	Not Coded
245	0.000	02/22/16	Tue	0733	Rear-End	0	1	0	Day	Dry	Not Coded
246	0.000	02/22/16	Tue	2100	Angle	0	0	1	Night	Dry	Not Coded
247	0.000	02/23/16	Wed	2150	Rear-End	0	0	1	Night	Dry	Not Coded
248	0.000	02/23/16	Wed	1907	Sideswipe	0	0	1	Night	Dry	Not Coded
249	0.000	02/23/16	Wed	1711	Rear-End	0	1	0	Night	Dry	Not Coded
250	0.000	02/23/16	Wed	1830	Sideswipe	0	0	1	Night	Dry	Not Coded
251	0.000	02/23/16	Wed	1740	Rear-End	0	0	1	Day	Dry	Not Coded
252	0.000	02/23/16	Wed	1119	Parked Motor Vehicle	0	0	1	Day	Dry	Not Coded
253	0.000	02/24/16	Thu	1948	Parked Motor Vehicle	0	1	0	Night	Dry	Not Coded
254	0.000	02/24/16	Thu	0755	Rear-End	0	0	1	Day	Dry	Not Coded
255	0.000	02/24/16	Thu	1600	Traffic Sign Support	0	0	1	Day	Dry	Not Coded
256	0.000	02/25/16	Fri	1800	Angle	0	0	1	Day	Dry	Not Coded
257	0.000	02/25/16	Fri	1659	Rear-End	0	0	1	Day	Dry	Not Coded
258	0.000	02/26/16	Sat	0953	Sideswipe	0	0	1	Day	Dry	Not Coded
259	0.000	02/26/16	Sat	0912	Backed Into	0	0	1	Day	Dry	Not Coded
260	0.000	02/26/16	Sat	1455	Other Non-Fixed Object	0	0	1	Day	Dry	Not Coded
261	0.000	02/26/16	Sat	1346	Sideswipe	0	0	1	Day	Dry	Not Coded
262	0.000	02/26/16	Sat	0756	Rear-End	0	0	1	Day	Dry	Not Coded
263	0.000	02/26/16	Sat	2147	Left-Turn	0	0	1	Night	Dry	Not Coded
264	0.000	02/26/16	Sat	2140	Rear-End	0	1	0	Night	Dry	Not Coded
265	0.000	02/26/16	Sat	1746	Sideswipe	0	0	1	Night	Dry	Not Coded
266	0.000	02/27/16	Sun	1140	Left-Turn	0	0	1	Day	Dry	Not Coded
267	0.000	02/27/16	Sun	2100	Backed Into	0	0	1	Night	Dry	Not Coded
268	0.000	02/27/16	Sun	0917	Rear-End	0	0	1	Day	Dry	Not Coded
269	0.000	02/27/16	Sun	1110	Rear-End	0	0	1	Day	Dry	Not Coded
270	0.000	02/28/16	Mon	0015	Traffic Signal Support	0	1	0	Night	Dry	Not Coded
271	0.000	02/28/16	Mon	1342	Rear-End	0	0	1	Day	Dry	Not Coded
272	0.000	02/28/16	Mon	1742	Angle	0	0	1	Night	Dry	Not Coded
273	0.000	02/29/16	Tue	1355	Backed Into	0	0	1	Day	Dry	Not Coded
274	0.000	02/29/16	Tue	0725	Angle	0	1	0	Day	Dry	Not Coded
275	0.000	02/29/16	Tue	1418	Sideswipe	0	0	1	Day	Dry	Not Coded
276	0.000	02/29/16	Tue	1140	Left-Turn	0	0	1	Day	Dry	Not Coded

State of Florida Department of Transportation
CRASH SUMMARY

SECTION: Ludlam Trail Corridor f — STATE ROUTE: #N/A
ROADWAY LIMITS: 0 — M.P. 0.000 TO 0.000 — ENGINEER: 0
STUDY PERIOD: FROM 1/ 2016 TO 12/ 2016 — COUNTY: Miami-Dade

No.	MILE POST	DATE	DAY	TIME	CRASH TYPE	FATAL	INJURIES	PROP DAM	DAY / NIGHT	WET / DRY	CONTRIBUTING CAUSE (VEHICLE ONLY)
277	0.000	02/29/16	Tue	1617	Rear-End	0	0	1	Day	Dry	Not Coded
278	0.000	03/01/16	Wed	1445	Sideswipe	0	0	1	Day	Dry	Not Coded
279	0.000	03/01/16	Wed	0917	Sideswipe	0	0	1	Day	Dry	Not Coded
280	0.000	03/01/16	Wed	1322	Rear-End	0	0	1	Day	Dry	Not Coded
281	0.000	03/02/16	Thu	1805	Parked Motor Vehicle	0	0	1	Day	Dry	Not Coded
282	0.000	03/02/16	Thu	1140	Angle	0	0	1	Day	Dry	Not Coded
283	0.000	03/02/16	Thu	0339	Angle	0	0	1	Night	Dry	Not Coded
284	0.000	03/03/16	Fri	1745	Rear-End	0	0	1	Day	Dry	Not Coded
285	0.000	03/03/16	Fri	1220	Angle	0	0	1	Day	Dry	Not Coded
286	0.000	03/03/16	Fri	0845	Rear-End	0	0	1	Day	Dry	Not Coded
287	0.000	03/04/16	Sat	1135	Angle	0	0	1	Day	Dry	Not Coded
288	0.000	03/04/16	Sat	0836	Angle	0	0	1	Day	Dry	Not Coded
289	0.000	03/04/16	Sat	1403	Rear-End	0	0	1	Day	Dry	Not Coded
290	0.000	03/04/16	Sat	0930	Angle	0	0	1	Day	Dry	Not Coded
291	0.000	03/04/16	Sat	1528	Angle	0	0	1	Day	Dry	Not Coded
292	0.000	03/04/16	Sat	1459	Rear-End	0	0	1	Day	Dry	Not Coded
293	0.000	03/05/16	Sun	1707	Angle	0	0	1	Day	Dry	Not Coded
294	0.000	03/06/16	Mon	1954	Angle	0	0	1	Night	Dry	Not Coded
295	0.000	03/07/16	Tue	1819	Rear-End	0	0	1	Day	Dry	Not Coded
296	0.000	03/07/16	Tue	1010	Rear-End	0	0	1	Day	Dry	Not Coded
297	0.000	03/08/16	Wed	1801	Rear-End	0	0	1	Night	Dry	Not Coded
298	0.000	03/08/16	Wed	1755	Parked Motor Vehicle	0	0	1	Night	Dry	Not Coded
299	0.000	03/08/16	Wed	1835	Sideswipe	0	0	1	Night	Dry	Not Coded
300	0.000	03/08/16	Wed	1847	Rear-End	0	0	1	Night	Dry	Not Coded
301	0.000	03/08/16	Wed	1925	Sideswipe	0	0	1	Day	Dry	Not Coded
302	0.000	03/09/16	Thu	1320	Rear-End	0	1	0	Day	Dry	Not Coded
303	0.000	03/09/16	Thu	1700	Angle	0	0	1	Day	Dry	Not Coded
304	0.000	03/09/16	Thu	1930	Right-Turn	0	0	1	Night	Dry	Not Coded
305	0.000	03/09/16	Thu	1436	Rear-End	0	0	1	Day	Dry	Not Coded
306	0.000	03/09/16	Thu	0804	Rear-End	0	0	1	Day	Dry	Not Coded
307	0.000	03/09/16	Thu	1520	Sideswipe	0	0	1	Day	Dry	Not Coded
308	0.000	03/09/16	Thu	2111	Left-Turn	0	0	1	Night	Dry	Not Coded
309	0.000	03/10/16	Fri	1802	Rear-End	0	0	1	Day	Dry	Not Coded
310	0.000	03/10/16	Fri	1923	Sideswipe	0	0	1	Night	Dry	Not Coded
311	0.000	03/10/16	Fri	0916	Rear-End	0	0	1	Day	Dry	Not Coded
312	0.000	03/10/16	Fri	0940	Angle	0	0	1	Day	Dry	Not Coded
313	0.000	03/10/16	Fri	1155	Angle	0	0	1	Day	Dry	Not Coded
314	0.000	03/10/16	Fri	1447	Sideswipe	0	0	1	Day	Dry	Not Coded
315	0.000	03/11/16	Sat	1025	Angle	0	0	1	Day	Dry	Not Coded
316	0.000	03/11/16	Sat	1800	Left-Turn	0	0	1	Day	Dry	Not Coded
317	0.000	03/11/16	Sat	2058	Sideswipe	0	0	1	Night	Dry	Not Coded
318	0.000	03/11/16	Sat	1355	Tree (Standing)	0	0	1	Day	Dry	Not Coded
319	0.000	03/11/16	Sat	1615	Sideswipe	0	0	1	Day	Dry	Not Coded
320	0.000	03/11/16	Sat	1540	Rear-End	0	0	1	Day	Dry	Not Coded
321	0.000	03/11/16	Sat	1323	Left-Turn	0	0	1	Day	Dry	Not Coded
322	0.000	03/11/16	Sat	0615	Rear-End	0	0	1	Day	Dry	Not Coded
323	0.000	03/11/16	Sat	1150	Pedestrian	0	0	1	Day	Dry	Not Coded
324	0.000	03/11/16	Sat	1109	Not Coded	0	0	1	Day	Dry	Not Coded
325	0.000	03/12/16	Sun	1033	Angle	0	0	1	Day	Dry	Not Coded
326	0.000	03/12/16	Sun	1152	Rear-End	0	0	1	Day	Dry	Not Coded
327	0.000	03/12/16	Sun	1045	Angle	0	0	1	Day	Dry	Not Coded
328	0.000	03/14/16	Tue	2054	Angle	0	0	1	Night	Dry	Not Coded
329	0.000	03/14/16	Tue	1835	Not Coded	0	0	1	Day	Dry	Not Coded
330	0.000	03/14/16	Tue	1710	Angle	0	0	1	Day	Dry	Not Coded
331	0.000	03/14/16	Tue	0848	Rear-End	0	0	1	Day	Dry	Not Coded
332	0.000	03/15/16	Wed	0933	Rear-End	0	0	1	Day	Dry	Not Coded
333	0.000	03/15/16	Wed	1616	Rear-End	0	0	1	Day	Dry	Not Coded
334	0.000	03/15/16	Wed	0727	Rear-End	0	0	1	Day	Dry	Not Coded
335	0.000	03/15/16	Wed	1810	Left-Turn	0	0	1	Day	Dry	Not Coded
336	0.000	03/15/16	Wed	1344	Rear-End	0	0	1	Day	Dry	Not Coded
337	0.000	03/15/16	Wed	2106	Left-Turn	0	1	0	Night	Dry	Not Coded
338	0.000	03/15/16	Wed	1712	Rear-End	0	0	1	Day	Dry	Not Coded
339	0.000	03/15/16	Wed	1100	Rear-End	0	0	1	Day	Dry	Not Coded
340	0.000	03/15/16	Wed	1654	Rear-End	0	0	1	Day	Dry	Not Coded
341	0.000	03/16/16	Thu	1000	Angle	0	0	1	Day	Dry	Not Coded
342	0.000	03/16/16	Thu	1435	Rear-End	0	0	1	Day	Dry	Not Coded
343	0.000	03/16/16	Thu	1607	Rear-End	0	0	1	Day	Dry	Not Coded
344	0.000	03/16/16	Thu	1345	Sideswipe	0	0	1	Day	Dry	Not Coded
345	0.000	03/16/16	Thu	0854	Left-Turn	0	0	1	Day	Dry	Not Coded

State of Florida Department of Transportation
CRASH SUMMARY

SECTION: Ludlam Trail Corridor f — STATE ROUTE: #N/A
ROADWAY LIMITS: 0 — M.P. 0.000 TO 0.000 — ENGINEER: 0
STUDY PERIOD: FROM 1/ 2016 TO 12/ 2016 — COUNTY: Miami-Dade

No.	MILE POST	DATE	DAY	TIME	CRASH TYPE	FATAL	INJURIES	PROP DAM	DAY / NIGHT	WET / DRY	CONTRIBUTING CAUSE (VEHICLE ONLY)
346	0.000	03/16/16	Thu	0835	Rear-End	0	1	0	Day	Dry	Not Coded
347	0.000	03/16/16	Thu	1119	Left-Turn	0	0	1	Day	Dry	Not Coded
348	0.000	03/16/16	Thu	1745	Angle	0	0	1	Day	Dry	Not Coded
349	0.000	03/17/16	Fri	0809	Angle	0	0	1	Day	Dry	Not Coded
350	0.000	03/17/16	Fri	1754	Rear-End	0	0	1	Day	Dry	Not Coded
351	0.000	03/17/16	Fri	0914	Rear-End	0	1	0	Day	Dry	Not Coded
352	0.000	03/17/16	Fri	1457	Angle	0	1	0	Day	Dry	Not Coded
353	0.000	03/18/16	Sat	1849	Angle	0	1	0	Night	Dry	Not Coded
354	0.000	03/18/16	Sat	1800	Rear-End	0	1	0	Day	Dry	Not Coded
355	0.000	03/18/16	Sat	1558	Rear-End	0	0	1	Day	Dry	Not Coded
356	0.000	03/18/16	Sat	1512	Right-Turn	0	0	1	Day	Dry	Not Coded
357	0.000	03/18/16	Sat	1633	Rear-End	0	0	1	Day	Dry	Not Coded
358	0.000	03/18/16	Sat	0000	Angle	0	0	1	Night	Dry	Not Coded
359	0.000	03/19/16	Sun	1510	Angle	0	0	1	Day	Dry	Not Coded
360	0.000	03/19/16	Sun	2352	Rear-End	0	1	0	Night	Dry	Not Coded
361	0.000	03/19/16	Sun	1240	Rear-End	0	0	1	Day	Dry	Not Coded
362	0.000	03/20/16	Mon	1205	Left-Turn	0	0	1	Day	Dry	Not Coded
363	0.000	03/21/16	Tue	0918	Rear-End	0	0	1	Day	Dry	Not Coded
364	0.000	03/21/16	Tue	1415	Not Coded	0	0	1	Day	Dry	Not Coded
365	0.000	03/22/16	Wed	1117	Sideswipe	0	0	1	Day	Dry	Not Coded
366	0.000	03/22/16	Wed	1320	Left-Turn	0	0	1	Day	Dry	Not Coded
367	0.000	03/23/16	Thu	1052	Rear-End	0	0	1	Day	Dry	Not Coded
368	0.000	03/23/16	Thu	1708	Rear-End	0	1	0	Day	Dry	Not Coded
369	0.000	03/23/16	Thu	1540	Sideswipe	0	0	1	Day	Dry	Not Coded
370	0.000	03/23/16	Thu	1454	Angle	0	0	1	Day	Dry	Not Coded
371	0.000	03/23/16	Thu	0935	Parked Motor Vehicle	0	0	1	Day	Dry	Not Coded
372	0.000	03/23/16	Thu	1424	Left-Turn	0	0	1	Day	Dry	Not Coded
373	0.000	03/24/16	Fri	1600	Left-Turn	0	0	1	Day	Dry	Not Coded
374	0.000	03/24/16	Fri	1740	Parked Motor Vehicle	0	0	1	Day	Dry	Not Coded
375	0.000	03/24/16	Fri	1640	Sideswipe	0	0	1	Day	Dry	Not Coded
376	0.000	03/25/16	Sat	2114	Rear-End	0	0	1	Night	Dry	Not Coded
377	0.000	03/25/16	Sat	1850	Left-Turn	0	1	0	Day	Dry	Not Coded
378	0.000	03/25/16	Sat	1323	Sideswipe	0	0	1	Day	Dry	Not Coded
379	0.000	03/25/16	Sat	1745	Sideswipe	0	0	1	Day	Dry	Not Coded
380	0.000	03/25/16	Sat	1100	Not Coded	0	1	0	Day	Dry	Not Coded
381	0.000	03/26/16	Sun	1513	Sideswipe	0	0	1	Day	Dry	Not Coded
382	0.000	03/26/16	Sun	1742	Rear-End	0	0	1	Day	Dry	Not Coded
383	0.000	03/26/16	Sun	1650	Angle	0	0	1	Day	Dry	Not Coded
384	0.000	03/27/16	Mon	1410	Sideswipe	0	1	0	Day	Dry	Not Coded
385	0.000	03/27/16	Mon	1552	Left-Turn	0	0	1	Day	Dry	Not Coded
386	0.000	03/28/16	Tue	0715	Sideswipe	0	0	1	Day	Dry	Not Coded
387	0.000	03/29/16	Wed	0030	Rear-End	0	0	1	Night	Dry	Not Coded
388	0.000	03/29/16	Wed	1735	Rear-End	0	0	1	Night	Dry	Not Coded
389	0.000	03/29/16	Wed	2155	Sideswipe	0	0	1	Night	Dry	Not Coded
390	0.000	03/29/16	Wed	1815	Rear-End	0	0	1	Day	Dry	Not Coded
391	0.000	03/29/16	Wed	1240	Rear-End	0	1	0	Day	Dry	Not Coded
392	0.000	03/29/16	Wed	1305	Left-Turn	0	0	1	Day	Dry	Not Coded
393	0.000	03/29/16	Wed	1638	Rear-End	0	0	1	Day	Dry	Not Coded
394	0.000	03/29/16	Wed	1911	Rear-End	0	0	1	Day	Dry	Not Coded
395	0.000	03/29/16	Wed	1400	Sideswipe	0	0	1	Day	Dry	Not Coded
396	0.000	03/29/16	Wed	0820	Sideswipe	0	0	1	Day	Dry	Not Coded
397	0.000	03/30/16	Thu	1156	Left-Turn	0	0	1	Day	Wet	Not Coded
398	0.000	03/30/16	Thu	1409	Parked Motor Vehicle	0	0	1	Day	Dry	Not Coded
399	0.000	03/30/16	Thu	1259	Left-Turn	0	1	0	Day	Dry	Not Coded
400	0.000	03/30/16	Thu	2315	Rear-End	0	0	1	Night	Dry	Not Coded
401	0.000	03/30/16	Thu	1452	Sideswipe	0	0	1	Day	Dry	Not Coded
402	0.000	03/30/16	Thu	1158	Angle	0	0	1	Day	Wet	Not Coded
403	0.000	03/30/16	Thu	1200	Rear-End	0	0	1	Day	Wet	Not Coded
404	0.000	03/30/16	Thu	1851	Sideswipe	0	0	1	Day	Dry	Not Coded
405	0.000	03/31/16	Fri	1745	Left-Turn	0	0	1	Day	Dry	Not Coded
406	0.000	03/31/16	Fri	1823	Angle	0	0	1	Day	Dry	Not Coded
407	0.000	03/31/16	Fri	2147	Left-Turn	0	0	1	Night	Dry	Not Coded
408	0.000	03/31/16	Fri	1343	Rear-End	0	0	1	Day	Dry	Not Coded
409	0.000	03/31/16	Fri	1809	Left-Turn	0	0	1	Day	Dry	Not Coded
410	0.000	03/31/16	Fri	1700	Rear-End	0	0	1	Day	Dry	Not Coded
411	0.000	03/31/16	Fri	1446	Rear-End	0	0	1	Day	Dry	Not Coded
412	0.000	03/31/16	Fri	1740	Rear-End	0	0	1	Day	Dry	Not Coded
413	0.000	04/01/16	Sat	1530	Rear-End	0	0	1	Day	Dry	Not Coded
414	0.000	04/01/16	Sat	1814	Angle	0	1	0	Day	Dry	Not Coded

State of Florida Department of Transportation
CRASH SUMMARY

SECTION: Ludlam Trail Corridor f — STATE ROUTE: #N/A
ROADWAY LIMITS: 0 — M.P. 0.000 TO 0.000 — ENGINEER: 0
STUDY PERIOD: FROM 1/ 2016 TO 12/ 2016 — COUNTY: Miami-Dade

No.	MILE POST	DATE	DAY	TIME	CRASH TYPE	FATAL	INJURIES	PROP DAM	DAY / NIGHT	WET / DRY	CONTRIBUTING CAUSE (VEHICLE ONLY)
415	0.000	04/01/16	Sat	1343	Rear-End	0	0	1	Day	Dry	Not Coded
416	0.000	04/01/16	Sat	1607	Rear-End	0	0	1	Day	Dry	Not Coded
417	0.000	04/01/16	Sat	1824	Backed Into	0	0	1	Day	Dry	Not Coded
418	0.000	04/02/16	Sun	1515	Rear-End	0	0	1	Day	Dry	Not Coded
419	0.000	04/02/16	Sun	1330	Angle	0	0	1	Day	Dry	Not Coded
420	0.000	04/02/16	Sun	1350	Rear-End	0	0	1	Day	Dry	Not Coded
421	0.000	04/02/16	Sun	0215	Angle	0	0	1	Night	Dry	Not Coded
422	0.000	04/03/16	Mon	1628	Angle	0	0	1	Day	Dry	Not Coded
423	0.000	04/03/16	Mon	1026	Rear-End	0	0	1	Day	Dry	Not Coded
424	0.000	04/03/16	Mon	0936	Rear-End	0	0	1	Day	Dry	Not Coded
425	0.000	04/04/16	Tue	2030	Right-Turn	0	0	1	Night	Dry	Not Coded
426	0.000	04/04/16	Tue	1640	Angle	0	0	1	Day	Dry	Not Coded
427	0.000	04/04/16	Tue	1400	Tree (Standing)	0	0	1	Day	Dry	Not Coded
428	0.000	04/04/16	Tue	1257	Angle	0	0	1	Day	Wet	Not Coded
429	0.000	04/04/16	Tue	1405	Sideswipe	0	0	1	Day	Dry	Not Coded
430	0.000	04/04/16	Tue	0944	Rear-End	0	0	1	Day	Dry	Not Coded
431	0.000	04/05/16	Wed	1712	Left-Turn	0	1	0	Day	Dry	Not Coded
432	0.000	04/05/16	Wed	1700	Backed Into	0	0	1	Day	Dry	Not Coded
433	0.000	04/05/16	Wed	0718	Left-Turn	0	0	1	Day	Dry	Not Coded
434	0.000	04/05/16	Wed	0735	Angle	0	0	1	Day	Dry	Not Coded
435	0.000	04/05/16	Wed	0745	Rear-End	0	1	0	Day	Dry	Not Coded
436	0.000	04/05/16	Wed	0750	Angle	0	0	1	Day	Dry	Not Coded
437	0.000	04/06/16	Thu	1052	Rear-End	0	0	1	Day	Dry	Not Coded
438	0.000	04/06/16	Thu	1510	Angle	0	0	1	Day	Dry	Not Coded
439	0.000	04/06/16	Thu	2330	Angle	0	0	1	Night	Dry	Not Coded
440	0.000	04/06/16	Thu	0730	Rear-End	0	1	0	Day	Dry	Not Coded
441	0.000	04/06/16	Thu	0850	Angle	0	1	0	Day	Dry	Not Coded
442	0.000	04/06/16	Thu	1447	Sideswipe	0	0	1	Day	Dry	Not Coded
443	0.000	04/06/16	Thu	1600	Not Coded	0	1	0	Day	Dry	Not Coded
444	0.000	04/07/16	Fri	1745	Left-Turn	0	0	1	Day	Dry	Not Coded
445	0.000	04/07/16	Fri	1246	Left-Turn	0	0	1	Day	Dry	Not Coded
446	0.000	04/07/16	Fri	0825	Angle	0	0	1	Day	Dry	Not Coded
447	0.000	04/07/16	Fri	1655	Angle	0	0	1	Day	Dry	Not Coded
448	0.000	04/07/16	Fri	1748	Left-Turn	0	0	1	Day	Dry	Not Coded
449	0.000	04/07/16	Fri	0939	Sideswipe	0	0	1	Day	Dry	Not Coded
450	0.000	04/08/16	Sat	1745	Backed Into	0	0	1	Day	Dry	Not Coded
451	0.000	04/08/16	Sat	1350	Angle	0	0	1	Day	Dry	Not Coded
452	0.000	04/09/16	Sun	1215	Rear-End	0	0	1	Day	Dry	Not Coded
453	0.000	04/09/16	Sun	1543	Sideswipe	0	0	1	Day	Dry	Not Coded
454	0.000	04/09/16	Sun	1610	Backed Into	0	0	1	Day	Dry	Not Coded
455	0.000	04/09/16	Sun	1558	Sideswipe	0	0	1	Day	Dry	Not Coded
456	0.000	04/10/16	Mon	2020	Rear-End	0	1	0	Day	Dry	Not Coded
457	0.000	04/10/16	Mon	0643	Rear-End	0	0	1	Night	Dry	Not Coded
458	0.000	04/10/16	Mon	0415	Left-Turn	0	0	1	Night	Dry	Not Coded
459	0.000	04/10/16	Mon	1955	Rear-End	0	0	1	Night	Dry	Not Coded
460	0.000	04/10/16	Mon	0143	Rear-End	0	1	0	Night	Dry	Not Coded
461	0.000	04/11/16	Tue	1801	Sideswipe	0	0	1	Day	Dry	Not Coded
462	0.000	04/11/16	Tue	1152	Rear-End	0	0	1	Day	Dry	Not Coded
463	0.000	04/11/16	Tue	0858	Rear-End	0	0	1	Day	Dry	Not Coded
464	0.000	04/11/16	Tue	2115	Rear-End	0	0	1	Night	Dry	Not Coded
465	0.000	04/12/16	Wed	1730	Rear-End	0	0	1	Day	Dry	Not Coded
466	0.000	04/12/16	Wed	1848	Angle	0	0	1	Day	Dry	Not Coded
467	0.000	04/12/16	Wed	1650	Rear-End	0	0	1	Day	Dry	Not Coded
468	0.000	04/12/16	Wed	1752	Angle	0	0	1	Day	Dry	Not Coded
469	0.000	04/12/16	Wed	1635	Rear-End	0	0	1	Day	Dry	Not Coded
470	0.000	04/13/16	Thu	1730	Rear-End	0	0	1	Day	Dry	Not Coded
471	0.000	04/13/16	Thu	1743	Left-Turn	0	0	1	Day	Dry	Not Coded
472	0.000	04/13/16	Thu	2024	Angle	0	0	1	Night	Dry	Not Coded
473	0.000	04/13/16	Thu	1729	Angle	0	0	1	Day	Dry	Not Coded
474	0.000	04/13/16	Thu	1556	Rear-End	0	0	1	Day	Dry	Not Coded
475	0.000	04/13/16	Thu	1837	Angle	0	0	1	Day	Dry	Not Coded
476	0.000	04/13/16	Thu	1343	Rear-End	0	0	1	Day	Dry	Not Coded
477	0.000	04/13/16	Thu	1750	Rear-End	0	0	1	Day	Dry	Not Coded
478	0.000	04/14/16	Fri	1317	Sideswipe	0	0	1	Day	Dry	Not Coded
479	0.000	04/14/16	Fri	1258	Sideswipe	0	1	0	Day	Dry	Not Coded
480	0.000	04/14/16	Fri	0830	Rear-End	0	0	1	Day	Dry	Not Coded
481	0.000	04/14/16	Fri	0832	Rear-End	0	0	1	Day	Dry	Not Coded
482	0.000	04/14/16	Fri	1630	Rear-End	0	0	1	Day	Dry	Not Coded
483	0.000	04/14/16	Fri	1810	Sideswipe	0	0	1	Night	Dry	Not Coded

State of Florida Department of Transportation
CRASH SUMMARY

SECTION: Ludlam Trail Corridor f | STATE ROUTE: #N/A
ROADWAY LIMITS: 0 | M.P. 0.000 TO 0.000 | ENGINEER: 0
STUDY PERIOD: FROM 1/ 2016 TO 12/ 2016 | COUNTY: Miami-Dade

No.	MILE POST	DATE	DAY	TIME	CRASH TYPE	FATAL	INJURIES	PROP DAM	DAY / NIGHT	WET / DRY	CONTRIBUTING CAUSE (VEHICLE ONLY)
484	0.000	04/14/16	Fri	1755	Rear-End	0	0	1	Day	Dry	Not Coded
485	0.000	04/15/16	Sat	0830	Rear-End	0	1	0	Day	Dry	Not Coded
486	0.000	04/15/16	Sat	1446	Rear-End	0	0	1	Day	Dry	Not Coded
487	0.000	04/15/16	Sat	1728	Rear-End	0	0	1	Day	Dry	Not Coded
488	0.000	04/15/16	Sat	1449	Thrown or Falling Object	0	1	0	Day	Dry	Not Coded
489	0.000	04/15/16	Sat	0915	Rear-End	0	0	1	Day	Dry	Not Coded
490	0.000	04/15/16	Sat	1735	Rear-End	0	0	1	Day	Dry	Not Coded
491	0.000	04/15/16	Sat	1250	Left-Turn	0	0	1	Day	Dry	Not Coded
492	0.000	04/15/16	Sat	1720	Sideswipe	0	0	1	Day	Dry	Not Coded
493	0.000	04/16/16	Sun	1244	Parked Motor Vehicle	0	0	1	Day	Dry	Not Coded
494	0.000	04/16/16	Sun	1455	Angle	0	0	1	Day	Dry	Not Coded
495	0.000	04/16/16	Sun	0209	Rear-End	0	0	1	Night	Wet	Not Coded
496	0.000	04/16/16	Sun	1400	Rear-End	0	0	1	Day	Dry	Not Coded
497	0.000	04/17/16	Mon	1007	Rear-End	0	0	1	Day	Dry	Not Coded
498	0.000	04/17/16	Mon	1712	Left-Turn	0	0	1	Day	Dry	Not Coded
499	0.000	04/17/16	Mon	0905	Rear-End	0	0	1	Day	Dry	Not Coded
500	0.000	04/17/16	Mon	1025	Backed Into	0	0	1	Day	Dry	Not Coded
501	0.000	04/18/16	Tue	1259	Sideswipe	0	0	1	Day	Dry	Not Coded
502	0.000	04/18/16	Tue	1645	Rear-End	0	0	1	Day	Dry	Not Coded
503	0.000	04/18/16	Tue	0955	Sideswipe	0	0	1	Day	Dry	Not Coded
504	0.000	04/19/16	Wed	1304	Rear-End	0	0	1	Day	Dry	Not Coded
505	0.000	04/19/16	Wed	2114	Rear-End	0	0	1	Day	Dry	Not Coded
506	0.000	04/19/16	Wed	1820	Rear-End	0	0	1	Day	Dry	Not Coded
507	0.000	04/20/16	Thu	1227	Rear-End	0	0	1	Day	Dry	Not Coded
508	0.000	04/20/16	Thu	1348	Bridge Rail	0	0	1	Day	Dry	Not Coded
509	0.000	04/20/16	Thu	1610	Angle	0	1	0	Day	Dry	Not Coded
510	0.000	04/20/16	Thu	1756	Rear-End	0	0	1	Day	Dry	Not Coded
511	0.000	04/20/16	Thu	2202	Rear-End	0	0	1	Night	Dry	Not Coded
512	0.000	04/20/16	Thu	1451	Right-Turn	0	1	0	Day	Dry	Not Coded
513	0.000	04/20/16	Thu	0545	Left-Turn	0	0	1	Night	Dry	Not Coded
514	0.000	04/20/16	Thu	1150	Pedalcycle	0	1	0	Day	Dry	Not Coded
515	0.000	04/20/16	Thu	1653	Left-Turn	0	0	1	Day	Dry	Not Coded
516	0.000	04/21/16	Fri	2215	Sideswipe	0	0	1	Night	Dry	Not Coded
517	0.000	04/21/16	Fri	1822	Angle	0	1	0	Day	Dry	Not Coded
518	0.000	04/21/16	Fri	1327	Rear-End	0	0	1	Day	Dry	Not Coded
519	0.000	04/22/16	Sat	1500	Left-Turn	0	0	1	Day	Dry	Not Coded
520	0.000	04/22/16	Sat	1717	Rear-End	0	0	1	Day	Dry	Not Coded
521	0.000	04/22/16	Sat	2024	Rear-End	0	0	1	Day	Dry	Not Coded
522	0.000	04/22/16	Sat	1700	Rear-End	0	0	1	Day	Dry	Not Coded
523	0.000	04/22/16	Sat	1346	Sideswipe	0	0	1	Day	Dry	Not Coded
524	0.000	04/22/16	Sat	0807	Sideswipe	0	0	1	Day	Dry	Not Coded
525	0.000	04/22/16	Sat	1630	Angle	0	0	1	Day	Dry	Not Coded
526	0.000	04/22/16	Sat	1112	Sideswipe	0	0	1	Day	Dry	Not Coded
527	0.000	04/22/16	Sat	1428	Backed Into	0	0	1	Day	Dry	Not Coded
528	0.000	04/22/16	Sat	1506	Rear-End	0	0	1	Day	Dry	Not Coded
529	0.000	04/23/16	Sun	1532	Angle	0	0	1	Day	Dry	Not Coded
530	0.000	04/23/16	Sun	1650	Not Coded	0	0	1	Day	Dry	Not Coded
531	0.000	04/23/16	Sun	1007	Left-Turn	0	1	0	Day	Dry	Not Coded
532	0.000	04/23/16	Sun	1700	Rear-End	0	0	1	Day	Dry	Not Coded
533	0.000	04/23/16	Sun	1945	Angle	0	0	1	Night	Dry	Not Coded
534	0.000	04/24/16	Mon	2001	Angle	0	1	0	Day	Dry	Not Coded
535	0.000	04/24/16	Mon	1045	Parked Motor Vehicle	0	0	1	Day	Dry	Not Coded
536	0.000	04/25/16	Tue	0806	Rear-End	0	0	1	Day	Dry	Not Coded
537	0.000	04/25/16	Tue	1810	Pedalcycle	0	0	1	Day	Dry	Not Coded
538	0.000	04/25/16	Tue	1039	Angle	0	0	1	Day	Dry	Not Coded
539	0.000	04/25/16	Tue	0124	Right-Turn	0	0	1	Night	Dry	Not Coded
540	0.000	04/25/16	Tue	1123	Curb	0	0	1	Day	Dry	Not Coded
541	0.000	04/26/16	Wed	2130	Rear-End	0	0	1	Night	Dry	Not Coded
542	0.000	04/26/16	Wed	1310	Left-Turn	0	0	1	Day	Dry	Not Coded
543	0.000	04/26/16	Wed	1937	Left-Turn	0	1	0	Night	Dry	Not Coded
544	0.000	04/26/16	Wed	1548	Rear-End	0	0	1	Day	Dry	Not Coded
545	0.000	04/26/16	Wed	1900	Angle	0	1	0	Day	Dry	Not Coded
546	0.000	04/26/16	Wed	0838	Right-Turn	0	0	1	Day	Dry	Not Coded
547	0.000	04/26/16	Wed	0715	Left-Turn	0	0	1	Day	Dry	Not Coded
548	0.000	04/26/16	Wed	0845	Angle	0	1	0	Day	Dry	Not Coded
549	0.000	04/26/16	Wed	1745	Rear-End	0	0	1	Day	Dry	Not Coded
550	0.000	04/26/16	Wed	0745	Sideswipe	0	0	1	Day	Dry	Not Coded
551	0.000	04/27/16	Thu	1500	Sideswipe	0	0	1	Day	Dry	Not Coded
552	0.000	04/27/16	Thu	1704	Angle	0	0	1	Day	Dry	Not Coded

State of Florida Department of Transportation
CRASH SUMMARY

SECTION: Ludlam Trail Corridor f — STATE ROUTE: #N/A
ROADWAY LIMITS: 0 — M.P. 0.000 TO 0.000 — ENGINEER: 0
STUDY PERIOD: FROM 1/ 2016 TO 12/ 2016 — COUNTY: Miami-Dade

No.	MILE POST	DATE	DAY	TIME	CRASH TYPE	FATAL	INJURIES	PROP DAM	DAY / NIGHT	WET / DRY	CONTRIBUTING CAUSE (VEHICLE ONLY)
553	0.000	04/27/16	Thu	1219	Backed Into	0	0	1	Day	Dry	Not Coded
554	0.000	04/27/16	Thu	1615	Head-On	0	0	1	Day	Dry	Not Coded
555	0.000	04/27/16	Thu	1522	Rear-End	0	1	0	Day	Dry	Not Coded
556	0.000	04/27/16	Thu	1611	Parked Motor Vehicle	0	0	1	Day	Dry	Not Coded
557	0.000	04/27/16	Thu	0800	Angle	0	0	1	Day	Dry	Not Coded
558	0.000	04/28/16	Fri	1820	Angle	0	0	1	Day	Dry	Not Coded
559	0.000	04/28/16	Fri	2214	Right-Turn	0	0	1	Night	Dry	Not Coded
560	0.000	04/28/16	Fri	1730	Angle	0	1	0	Day	Dry	Not Coded
561	0.000	04/29/16	Sat	1522	Left-Turn	0	1	0	Day	Dry	Not Coded
562	0.000	04/29/16	Sat	1700	Rear-End	0	0	1	Day	Dry	Not Coded
563	0.000	04/29/16	Sat	1023	Rear-End	0	0	1	Day	Dry	Not Coded
564	0.000	04/30/16	Sun	1201	Rear-End	0	0	1	Day	Dry	Not Coded
565	0.000	04/30/16	Sun	1050	Rear-End	0	0	1	Day	Dry	Not Coded
566	0.000	05/01/16	Mon	1817	Rear-End	0	0	1	Day	Dry	Not Coded
567	0.000	05/01/16	Mon	1905	Rear-End	0	0	1	Day	Dry	Not Coded
568	0.000	05/01/16	Mon	1455	Angle	0	0	1	Day	Dry	Not Coded
569	0.000	05/01/16	Mon	2255	Angle	0	1	0	Night	Dry	Not Coded
570	0.000	05/01/16	Mon	1600	Parked Motor Vehicle	0	0	1	Day	Dry	Not Coded
571	0.000	05/01/16	Mon	1639	Sideswipe	0	0	1	Day	Dry	Not Coded
572	0.000	05/01/16	Mon	1815	Backed Into	0	1	0	Day	Dry	Not Coded
573	0.000	05/02/16	Tue	1537	Parked Motor Vehicle	0	0	1	Day	Dry	Not Coded
574	0.000	05/02/16	Tue	1813	Angle	0	0	1	Day	Dry	Not Coded
575	0.000	05/02/16	Tue	2017	Angle	0	0	1	Day	Dry	Not Coded
576	0.000	05/03/16	Wed	1159	Rear-End	0	0	1	Day	Dry	Not Coded
577	0.000	05/03/16	Wed	0917	Rear-End	0	0	1	Day	Dry	Not Coded
578	0.000	05/03/16	Wed	1035	Not Coded	0	0	1	Day	Dry	Not Coded
579	0.000	05/03/16	Wed	0836	Rear-End	0	0	1	Day	Dry	Not Coded
580	0.000	05/03/16	Wed	1923	Angle	0	0	1	Day	Wet	Not Coded
581	0.000	05/03/16	Wed	1031	Rear-End	0	0	1	Day	Dry	Not Coded
582	0.000	05/04/16	Thu	1238	Left-Turn	0	0	1	Day	Wet	Not Coded
583	0.000	05/04/16	Thu	1220	Sideswipe	0	0	1	Day	Wet	Not Coded
584	0.000	05/04/16	Thu	1155	Rear-End	0	0	1	Day	Dry	Not Coded
585	0.000	05/04/16	Thu	1700	Sideswipe	0	0	1	Day	Dry	Not Coded
586	0.000	05/04/16	Thu	1605	Rear-End	0	0	1	Day	Wet	Not Coded
587	0.000	05/04/16	Thu	0940	Rear-End	0	0	1	Day	Dry	Not Coded
588	0.000	05/04/16	Thu	1047	Angle	0	0	1	Day	Dry	Not Coded
589	0.000	05/04/16	Thu	0640	Angle	0	1	0	Day	Dry	Not Coded
590	0.000	05/04/16	Thu	2020	Angle	1	0	0	Night	Wet	Not Coded
591	0.000	05/04/16	Thu	1727	Sideswipe	0	0	1	Day	Wet	Not Coded
592	0.000	05/04/16	Thu	1710	Rear-End	0	0	1	Day	Dry	Not Coded
593	0.000	05/05/16	Fri	1740	Rear-End	0	1	0	Day	Dry	Not Coded
594	0.000	05/05/16	Fri	1730	Rear-End	0	1	0	Day	Dry	Not Coded
595	0.000	05/05/16	Fri	1305	Angle	0	0	1	Day	Dry	Not Coded
596	0.000	05/05/16	Fri	2036	Rear-End	0	0	1	Night	Dry	Not Coded
597	0.000	05/05/16	Fri	2015	Left-Turn	0	0	1	Night	Dry	Not Coded
598	0.000	05/05/16	Fri	0715	Rear-End	0	0	1	Day	Dry	Not Coded
599	0.000	05/06/16	Sat	1515	Rear-End	0	0	1	Day	Dry	Not Coded
600	0.000	05/06/16	Sat	1410	Backed Into	0	0	1	Day	Dry	Not Coded
601	0.000	05/06/16	Sat	1720	Angle	0	0	1	Day	Dry	Not Coded
602	0.000	05/06/16	Sat	1243	Rear-End	0	0	1	Day	Dry	Not Coded
603	0.000	05/06/16	Sat	1453	Rear-End	0	1	0	Day	Dry	Not Coded
604	0.000	05/06/16	Sat	1143	Rear-End	0	0	1	Day	Dry	Not Coded
605	0.000	05/07/16	Sun	1300	Rear-End	0	0	1	Day	Dry	Not Coded
606	0.000	05/07/16	Sun	1507	Rear-End	0	0	1	Day	Dry	Not Coded
607	0.000	05/07/16	Sun	0925	Angle	0	0	1	Day	Dry	Not Coded
608	0.000	05/07/16	Sun	1820	Left-Turn	0	0	1	Day	Dry	Not Coded
609	0.000	05/08/16	Mon	1455	Rear-End	0	0	1	Day	Dry	Not Coded
610	0.000	05/08/16	Mon	1956	Rear-End	0	0	1	Night	Dry	Not Coded
611	0.000	05/08/16	Mon	1845	Rear-End	0	0	1	Day	Dry	Not Coded
612	0.000	05/08/16	Mon	1828	Sideswipe	0	0	1	Day	Dry	Not Coded
613	0.000	05/09/16	Tue	1133	Pedestrian	0	0	1	Day	Dry	Not Coded
614	0.000	05/09/16	Tue	1510	Parked Motor Vehicle	0	0	1	Day	Dry	Not Coded
615	0.000	05/09/16	Tue	0800	Rear-End	0	0	1	Day	Dry	Not Coded
616	0.000	05/09/16	Tue	2315	Backed Into	0	0	1	Night	Dry	Not Coded
617	0.000	05/09/16	Tue	1337	Rear-End	0	0	1	Day	Dry	Not Coded
618	0.000	05/09/16	Tue	0815	Sideswipe	0	1	0	Day	Dry	Not Coded
619	0.000	05/10/16	Wed	1440	Sideswipe	0	0	1	Day	Dry	Not Coded
620	0.000	05/10/16	Wed	1704	Rear-End	0	0	1	Day	Dry	Not Coded
621	0.000	05/10/16	Wed	1240	Sideswipe	0	0	1	Day	Dry	Not Coded

State of Florida Department of Transportation
CRASH SUMMARY

SECTION: Ludlam Trail Corridor f | STATE ROUTE: #N/A
ROADWAY LIMITS: 0 | M.P. 0.000 TO 0.000 | ENGINEER: 0
STUDY PERIOD: FROM 1/ 2016 TO 12/ 2016 | COUNTY: Miami-Dade

No.	MILE POST	DATE	DAY	TIME	CRASH TYPE	FATAL	INJURIES	PROP DAM	DAY / NIGHT	WET / DRY	CONTRIBUTING CAUSE (VEHICLE ONLY)
622	0.000	05/10/16	Wed	0727	Left-Turn	0	0	1	Day	Dry	Not Coded
623	0.000	05/10/16	Wed	2137	Rear-End	0	0	1	Night	Dry	Not Coded
624	0.000	05/10/16	Wed	1530	Rear-End	0	0	1	Day	Dry	Not Coded
625	0.000	05/10/16	Wed	2205	Rear-End	0	0	1	Night	Dry	Not Coded
626	0.000	05/10/16	Wed	1504	Angle	0	0	1	Day	Dry	Not Coded
627	0.000	05/10/16	Wed	1523	Angle	0	0	1	Day	Dry	Not Coded
628	0.000	05/10/16	Wed	1323	Rear-End	0	0	1	Day	Dry	Not Coded
629	0.000	05/10/16	Wed	1505	Rear-End	0	0	1	Day	Dry	Not Coded
630	0.000	05/11/16	Thu	0739	Rear-End	0	0	1	Day	Dry	Not Coded
631	0.000	05/11/16	Thu	1810	Angle	0	0	1	Day	Dry	Not Coded
632	0.000	05/11/16	Thu	1644	Rear-End	0	0	1	Day	Dry	Not Coded
633	0.000	05/11/16	Thu	1813	Rear-End	0	0	1	Day	Dry	Not Coded
634	0.000	05/11/16	Thu	0728	Left-Turn	0	1	0	Day	Dry	Not Coded
635	0.000	05/11/16	Thu	1810	Angle	0	1	0	Day	Dry	Not Coded
636	0.000	05/11/16	Thu	1554	Sideswipe	0	0	1	Day	Dry	Not Coded
637	0.000	05/11/16	Thu	2035	Rear-End	0	0	1	Night	Dry	Not Coded
638	0.000	05/11/16	Thu	1632	Rear-End	0	1	0	Day	Dry	Not Coded
639	0.000	05/12/16	Fri	1420	Left-Turn	0	0	1	Day	Dry	Not Coded
640	0.000	05/12/16	Fri	0900	Pedestrian	0	0	1	Day	Dry	Not Coded
641	0.000	05/12/16	Fri	1455	Parked Motor Vehicle	0	1	0	Day	Dry	Not Coded
642	0.000	05/12/16	Fri	1612	Rear-End	0	0	1	Day	Dry	Not Coded
643	0.000	05/13/16	Sat	1205	Sideswipe	0	0	1	Day	Dry	Not Coded
644	0.000	05/13/16	Sat	1431	Fell/Jumped from Motor Vehicle	0	0	1	Day	Dry	Not Coded
645	0.000	05/13/16	Sat	1750	Parked Motor Vehicle	0	0	1	Day	Dry	Not Coded
646	0.000	05/13/16	Sat	1333	Backed Into	0	0	1	Day	Dry	Not Coded
647	0.000	05/13/16	Sat	1840	Sideswipe	0	0	1	Day	Dry	Not Coded
648	0.000	05/14/16	Sun	1439	Right-Turn	0	0	1	Day	Dry	Not Coded
649	0.000	05/14/16	Sun	1432	Rear-End	0	0	1	Day	Dry	Not Coded
650	0.000	05/14/16	Sun	2233	Left-Turn	0	1	0	Night	Dry	Not Coded
651	0.000	05/14/16	Sun	2200	Left-Turn	0	0	1	Night	Wet	Not Coded
652	0.000	05/15/16	Mon	1605	Rear-End	0	0	1	Day	Dry	Not Coded
653	0.000	05/16/16	Tue	1538	Rear-End	0	0	1	Day	Dry	Not Coded
654	0.000	05/16/16	Tue	1623	Sideswipe	0	0	1	Day	Dry	Not Coded
655	0.000	05/16/16	Tue	1130	Rear-End	0	0	1	Day	Dry	Not Coded
656	0.000	05/16/16	Tue	2108	Angle	0	0	1	Day	Dry	Not Coded
657	0.000	05/16/16	Tue	1825	Left-Turn	0	0	1	Day	Dry	Not Coded
658	0.000	05/17/16	Wed	1205	Rear-End	0	0	1	Day	Dry	Not Coded
659	0.000	05/17/16	Wed	1048	Sideswipe	0	0	1	Day	Dry	Not Coded
660	0.000	05/17/16	Wed	0803	Angle	0	0	1	Day	Dry	Not Coded
661	0.000	05/17/16	Wed	1450	Sideswipe	0	0	1	Day	Dry	Not Coded
662	0.000	05/17/16	Wed	1039	Left-Turn	0	0	1	Day	Dry	Not Coded
663	0.000	05/17/16	Wed	1029	Rear-End	0	0	1	Day	Dry	Not Coded
664	0.000	05/17/16	Wed	1900	Left-Turn	0	0	1	Night	Dry	Not Coded
665	0.000	05/17/16	Wed	0845	Sideswipe	0	0	1	Day	Dry	Not Coded
666	0.000	05/18/16	Thu	0620	Angle	0	0	1	Day	Dry	Not Coded
667	0.000	05/18/16	Thu	1602	Left-Turn	0	0	1	Day	Wet	Not Coded
668	0.000	05/18/16	Thu	1340	Angle	0	0	1	Day	Dry	Not Coded
669	0.000	05/18/16	Thu	1758	Rear-End	0	0	1	Day	Dry	Not Coded
670	0.000	05/18/16	Thu	1635	Angle	0	0	1	Day	Wet	Not Coded
671	0.000	05/18/16	Thu	0804	Rear-End	0	0	1	Day	Wet	Not Coded
672	0.000	05/18/16	Thu	0030	Angle	0	0	1	Night	Dry	Not Coded
673	0.000	05/19/16	Fri	1927	Utility Pole/Light Support	0	0	1	Day	Dry	Not Coded
674	0.000	05/20/16	Sat	1238	Left-Turn	0	0	1	Day	Dry	Not Coded
675	0.000	05/20/16	Sat	1420	Rear-End	0	0	1	Day	Dry	Not Coded
676	0.000	05/20/16	Sat	0831	Sideswipe	0	0	1	Day	Dry	Not Coded
677	0.000	05/20/16	Sat	1815	Angle	0	1	0	Day	Dry	Not Coded
678	0.000	05/20/16	Sat	0610	Angle	0	0	1	Day	Dry	Not Coded
679	0.000	05/20/16	Sat	1930	Rear-End	0	0	1	Day	Dry	Not Coded
680	0.000	05/21/16	Sun	1402	Rear-End	0	0	1	Day	Dry	Not Coded
681	0.000	05/21/16	Sun	1330	Angle	0	0	1	Day	Dry	Not Coded
682	0.000	05/22/16	Mon	1635	Left-Turn	0	1	0	Day	Dry	Not Coded
683	0.000	05/22/16	Mon	1458	Left-Turn	0	0	1	Day	Dry	Not Coded
684	0.000	05/22/16	Mon	1910	Rear-End	0	0	1	Night	Dry	Not Coded
685	0.000	05/23/16	Tue	0834	Angle	0	1	0	Day	Dry	Not Coded
686	0.000	05/23/16	Tue	1713	Rear-End	0	0	1	Day	Dry	Not Coded
687	0.000	05/23/16	Tue	0930	Angle	0	0	1	Day	Dry	Not Coded
688	0.000	05/23/16	Tue	1605	Rear-End	0	0	1	Day	Dry	Not Coded
689	0.000	05/23/16	Tue	1127	Rear-End	0	1	0	Day	Dry	Not Coded
690	0.000	05/23/16	Tue	2110	Left-Turn	0	0	1	Day	Dry	Not Coded

State of Florida Department of Transportation
CRASH SUMMARY

SECTION: Ludlam Trail Corridor f — STATE ROUTE: #N/A
ROADWAY LIMITS: 0 — M.P. 0.000 TO 0.000 — ENGINEER: 0
STUDY PERIOD: FROM 1/ 2016 TO 12/ 2016 — COUNTY: Miami-Dade

No.	MILE POST	DATE	DAY	TIME	CRASH TYPE	FATAL	INJURIES	PROP DAM	DAY / NIGHT	WET / DRY	CONTRIBUTING CAUSE (VEHICLE ONLY)
691	0.000	05/23/16	Tue	1131	Rear-End	0	0	1	Day	Dry	Not Coded
692	0.000	05/24/16	Wed	1337	Sideswipe	0	0	1	Day	Wet	Not Coded
693	0.000	05/24/16	Wed	1549	Rear-End	0	0	1	Day	Wet	Not Coded
694	0.000	05/24/16	Wed	1810	Rear-End	0	0	1	Day	Dry	Not Coded
695	0.000	05/24/16	Wed	1739	Rear-End	0	0	1	Day	Wet	Not Coded
696	0.000	05/24/16	Wed	1810	Left-Turn	0	0	1	Day	Dry	Not Coded
697	0.000	05/24/16	Wed	1030	Backed Into	0	0	1	Day	Dry	Not Coded
698	0.000	05/25/16	Thu	1820	Rear-End	0	0	1	Day	Dry	Not Coded
699	0.000	05/25/16	Thu	0715	Left-Turn	0	0	1	Day	Dry	Not Coded
700	0.000	05/25/16	Thu	0751	Sideswipe	0	1	0	Day	Dry	Not Coded
701	0.000	05/25/16	Thu	0805	Rear-End	0	1	0	Day	Dry	Not Coded
702	0.000	05/25/16	Thu	1616	Rear-End	0	0	1	Day	Dry	Not Coded
703	0.000	05/25/16	Thu	1737	Angle	0	0	1	Day	Dry	Not Coded
704	0.000	05/26/16	Fri	1334	Sideswipe	0	0	1	Day	Dry	Not Coded
705	0.000	05/26/16	Fri	1239	Angle	0	0	1	Day	Dry	Not Coded
706	0.000	05/26/16	Fri	1145	Angle	0	0	1	Day	Dry	Not Coded
707	0.000	05/26/16	Fri	1958	Backed Into	0	0	1	Night	Dry	Not Coded
708	0.000	05/26/16	Fri	1155	Sideswipe	0	0	1	Day	Dry	Not Coded
709	0.000	05/27/16	Sat	1409	Rear-End	0	0	1	Day	Dry	Not Coded
710	0.000	05/27/16	Sat	1619	Rear-End	0	0	1	Day	Dry	Not Coded
711	0.000	05/27/16	Sat	0755	Rear-End	0	0	1	Day	Dry	Not Coded
712	0.000	05/27/16	Sat	1229	Left-Turn	0	0	1	Day	Dry	Not Coded
713	0.000	05/28/16	Sun	1351	Rear-End	0	0	1	Day	Dry	Not Coded
714	0.000	05/28/16	Sun	1005	Rear-End	0	0	1	Day	Dry	Not Coded
715	0.000	05/29/16	Mon	0005	Rear-End	0	0	1	Night	Dry	Not Coded
716	0.000	05/31/16	Wed	1530	Rear-End	0	0	1	Day	Wet	Not Coded
717	0.000	05/31/16	Wed	1542	Backed Into	0	0	1	Day	Wet	Not Coded
718	0.000	06/01/16	Thu	0900	Rear-End	0	0	1	Day	Dry	Not Coded
719	0.000	06/01/16	Thu	1740	Left-Turn	0	0	1	Day	Dry	Not Coded
720	0.000	06/01/16	Thu	0545	Rear-End	0	0	1	Night	Wet	Not Coded
721	0.000	06/01/16	Thu	0827	Rear-End	0	0	1	Day	Dry	Not Coded
722	0.000	06/03/16	Sat	1829	Pedalcycle	0	1	0	Day	Dry	Not Coded
723	0.000	06/03/16	Sat	2230	Rear-End	0	0	1	Day	Dry	Not Coded
724	0.000	06/03/16	Sat	2056	Rear-End	0	0	1	Day	Dry	Not Coded
725	0.000	06/03/16	Sat	1430	Rear-End	0	0	1	Day	Dry	Not Coded
726	0.000	06/03/16	Sat	2224	Rear-End	0	0	1	Night	Dry	Not Coded
727	0.000	06/03/16	Sat	0910	Rear-End	0	0	1	Day	Dry	Not Coded
728	0.000	06/03/16	Sat	1400	Angle	0	0	1	Day	Dry	Not Coded
729	0.000	06/03/16	Sat	1720	Parked Motor Vehicle	0	0	1	Day	Dry	Not Coded
730	0.000	06/05/16	Mon	1015	Sideswipe	0	0	1	Day	Wet	Not Coded
731	0.000	06/05/16	Mon	1010	Rear-End	0	0	1	Day	Wet	Not Coded
732	0.000	06/05/16	Mon	1253	Rear-End	0	0	1	Day	Dry	Not Coded
733	0.000	06/06/16	Tue	1144	Rear-End	0	0	1	Day	Dry	Not Coded
734	0.000	06/06/16	Tue	1130	Rear-End	0	0	1	Day	Dry	Not Coded
735	0.000	06/06/16	Tue	1850	Right-Turn	0	0	1	Day	Wet	Not Coded
736	0.000	06/06/16	Tue	0920	Rear-End	0	0	1	Day	Dry	Not Coded
737	0.000	06/06/16	Tue	1537	Rear-End	0	0	1	Day	Dry	Not Coded
738	0.000	06/07/16	Wed	1400	Rear-End	0	0	1	Day	Dry	Not Coded
739	0.000	06/07/16	Wed	1128	Rear-End	0	0	1	Day	Dry	Not Coded
740	0.000	06/07/16	Wed	1129	Sideswipe	0	0	1	Day	Dry	Not Coded
741	0.000	06/07/16	Wed	1514	Left-Turn	0	0	1	Day	Dry	Not Coded
742	0.000	06/07/16	Wed	1614	Left-Turn	0	0	1	Day	Wet	Not Coded
743	0.000	06/07/16	Wed	2245	Angle	0	0	1	Night	Wet	Not Coded
744	0.000	06/08/16	Thu	1305	Rear-End	0	0	1	Day	Wet	Not Coded
745	0.000	06/08/16	Thu	0735	Sideswipe	0	0	1	Day	Dry	Not Coded
746	0.000	06/08/16	Thu	1708	Sideswipe	0	0	1	Day	Wet	Not Coded
747	0.000	06/08/16	Thu	2116	Curb	0	0	1	Day	Dry	Not Coded
748	0.000	06/08/16	Thu	0735	Rear-End	0	1	0	Day	Dry	Not Coded
749	0.000	06/08/16	Thu	1045	Rear-End	1	0	0	Day	Wet	Not Coded
750	0.000	06/09/16	Fri	2317	Backed Into	0	1	0	Night	Wet	Not Coded
751	0.000	06/09/16	Fri	1601	Rear-End	0	0	1	Day	Dry	Not Coded
752	0.000	06/09/16	Fri	1645	Rear-End	0	0	1	Day	Dry	Not Coded
753	0.000	06/09/16	Fri	1400	Left-Turn	0	0	1	Day	Dry	Not Coded
754	0.000	06/09/16	Fri	2100	Left-Turn	0	0	1	Night	Wet	Not Coded
755	0.000	06/09/16	Fri	1734	Rear-End	0	0	1	Day	Dry	Not Coded
756	0.000	06/09/16	Fri	1810	Utility Pole/Light Support	0	0	1	Day	Wet	Not Coded
757	0.000	06/09/16	Fri	1216	Angle	0	1	0	Day	Dry	Not Coded
758	0.000	06/09/16	Fri	0815	Rear-End	0	0	1	Day	Dry	Not Coded
759	0.000	06/09/16	Fri	1906	Rear-End	0	0	1	Day	Wet	Not Coded

State of Florida Department of Transportation
CRASH SUMMARY

SECTION: Ludlam Trail Corridor f — STATE ROUTE: #N/A
ROADWAY LIMITS: 0 — M.P. 0.000 TO 0.000 — ENGINEER: 0
STUDY PERIOD: FROM 1/ 2016 TO 12/ 2016 — COUNTY: Miami-Dade

No.	MILE POST	DATE	DAY	TIME	CRASH TYPE	FATAL	INJURIES	PROP DAM	DAY / NIGHT	WET / DRY	CONTRIBUTING CAUSE (VEHICLE ONLY)
760	0.000	06/10/16	Sat	0005	Left-Turn	0	0	1	Night	Wet	Not Coded
761	0.000	06/10/16	Sat	0010	Rear-End	0	0	1	Night	Wet	Not Coded
762	0.000	06/10/16	Sat	1435	Rear-End	0	0	1	Day	Wet	Not Coded
763	0.000	06/10/16	Sat	1152	Rear-End	0	0	1	Day	Dry	Not Coded
764	0.000	06/10/16	Sat	1040	Rear-End	0	0	1	Day	Dry	Not Coded
765	0.000	06/10/16	Sat	1427	Rear-End	0	0	1	Day	Wet	Not Coded
766	0.000	06/10/16	Sat	1755	Angle	0	0	1	Day	Dry	Not Coded
767	0.000	06/10/16	Sat	2310	Angle	0	0	1	Night	Dry	Not Coded
768	0.000	06/11/16	Sun	2045	Rear-End	0	0	1	Night	Wet	Not Coded
769	0.000	06/11/16	Sun	1041	Angle	0	0	1	Day	Dry	Not Coded
770	0.000	06/11/16	Sun	1632	Rear-End	0	0	1	Day	Wet	Not Coded
771	0.000	06/11/16	Sun	1440	Rear-End	0	0	1	Day	Dry	Not Coded
772	0.000	06/11/16	Sun	1859	Sideswipe	0	0	1	Night	Wet	Not Coded
773	0.000	06/12/16	Mon	0132	Rear-End	0	1	0	Night	Wet	Not Coded
774	0.000	06/12/16	Mon	1211	Rear-End	0	0	1	Day	Dry	Not Coded
775	0.000	06/13/16	Tue	1730	Left-Turn	0	0	1	Day	Dry	Not Coded
776	0.000	06/13/16	Tue	1600	Left-Turn	0	0	1	Day	Dry	Not Coded
777	0.000	06/13/16	Tue	1410	Rear-End	0	0	1	Day	Dry	Not Coded
778	0.000	06/13/16	Tue	0840	Sideswipe	0	0	1	Day	Dry	Not Coded
779	0.000	06/13/16	Tue	1359	Rear-End	0	0	1	Day	Dry	Not Coded
780	0.000	06/14/16	Wed	0850	Not Coded	0	0	1	Day	Dry	Not Coded
781	0.000	06/14/16	Wed	1249	Rear-End	0	0	1	Day	Dry	Not Coded
782	0.000	06/14/16	Wed	1627	Left-Turn	0	0	1	Day	Dry	Not Coded
783	0.000	06/15/16	Thu	2027	Left-Turn	0	0	1	Night	Dry	Not Coded
784	0.000	06/15/16	Thu	0020	Left-Turn	0	1	0	Day	Dry	Not Coded
785	0.000	06/15/16	Thu	1715	Angle	0	0	1	Day	Dry	Not Coded
786	0.000	06/15/16	Thu	1737	Rear-End	0	0	1	Day	Dry	Not Coded
787	0.000	06/16/16	Fri	1241	Sideswipe	0	0	1	Day	Wet	Not Coded
788	0.000	06/16/16	Fri	1720	Rear-End	0	0	1	Day	Dry	Not Coded
789	0.000	06/16/16	Fri	1332	Left-Turn	0	0	1	Day	Dry	Not Coded
790	0.000	06/16/16	Fri	1721	Rear-End	0	0	1	Day	Dry	Not Coded
791	0.000	06/16/16	Fri	1515	Backed Into	0	0	1	Day	Dry	Not Coded
792	0.000	06/16/16	Fri	0914	Sideswipe	0	0	1	Day	Dry	Not Coded
793	0.000	06/16/16	Fri	0818	Backed Into	0	0	1	Day	Dry	Not Coded
794	0.000	06/17/16	Sat	0909	Not Coded	0	0	1	Day	Dry	Not Coded
795	0.000	06/17/16	Sat	0750	Angle	0	0	1	Day	Dry	Not Coded
796	0.000	06/17/16	Sat	1345	Rear-End	0	0	1	Day	Dry	Not Coded
797	0.000	06/17/16	Sat	1332	Rear-End	0	0	1	Day	Dry	Not Coded
798	0.000	06/17/16	Sat	1325	Left-Turn	0	0	1	Day	Dry	Not Coded
799	0.000	06/17/16	Sat	1410	Angle	0	0	1	Day	Dry	Not Coded
800	0.000	06/17/16	Sat	1744	Backed Into	0	0	1	Day	Wet	Not Coded
801	0.000	06/18/16	Sun	1521	Rear-End	0	0	1	Day	Dry	Not Coded
802	0.000	06/20/16	Tue	1248	Sideswipe	0	0	1	Day	Dry	Not Coded
803	0.000	06/21/16	Wed	0833	Rear-End	0	0	1	Day	Wet	Not Coded
804	0.000	06/21/16	Wed	1525	Angle	0	0	1	Day	Wet	Not Coded
805	0.000	06/21/16	Wed	1535	Sideswipe	0	1	0	Day	Wet	Not Coded
806	0.000	06/21/16	Wed	1600	Rear-End	0	0	1	Day	Wet	Not Coded
807	0.000	06/21/16	Wed	0910	Angle	0	0	1	Day	Wet	Not Coded
808	0.000	06/21/16	Wed	1710	Rear-End	0	0	1	Day	Wet	Not Coded
809	0.000	06/22/16	Thu	2312	Rear-End	0	0	1	Night	Dry	Not Coded
810	0.000	06/22/16	Thu	0855	Rear-End	0	1	0	Day	Dry	Not Coded
811	0.000	06/22/16	Thu	2053	Rear-End	0	0	1	Night	Dry	Not Coded
812	0.000	06/22/16	Thu	1749	Rear-End	0	0	1	Day	Dry	Not Coded
813	0.000	06/23/16	Fri	0611	Tree (Standing)	0	1	0	Day	Dry	Not Coded
814	0.000	06/23/16	Fri	1652	Right-Turn	0	0	1	Day	Dry	Not Coded
815	0.000	06/23/16	Fri	1216	Other Fixed Object	0	0	1	Day	Dry	Not Coded
816	0.000	06/24/16	Sat	1305	Angle	0	0	1	Day	Dry	Not Coded
817	0.000	06/24/16	Sat	1750	Sideswipe	0	0	1	Day	Dry	Not Coded
818	0.000	06/24/16	Sat	1228	Rear-End	0	0	1	Day	Dry	Not Coded
819	0.000	06/24/16	Sat	1138	Rear-End	0	1	0	Day	Dry	Not Coded
820	0.000	06/25/16	Sun	1140	Rear-End	0	0	1	Day	Dry	Not Coded
821	0.000	06/25/16	Sun	1233	Rear-End	0	0	1	Day	Dry	Not Coded
822	0.000	06/25/16	Sun	1549	Rear-End	0	0	1	Day	Dry	Not Coded
823	0.000	06/25/16	Sun	1301	Rear-End	0	0	1	Day	Dry	Not Coded
824	0.000	06/27/16	Tue	0805	Rear-End	0	0	1	Day	Dry	Not Coded
825	0.000	06/27/16	Tue	0739	Rear-End	0	1	0	Day	Dry	Not Coded
826	0.000	06/27/16	Tue	1520	Left-Turn	0	0	1	Day	Dry	Not Coded
827	0.000	06/27/16	Tue	1809	Left-Turn	0	0	1	Day	Dry	Not Coded
828	0.000	06/27/16	Tue	1715	Rear-End	0	0	1	Day	Dry	Not Coded

State of Florida Department of Transportation
CRASH SUMMARY

SECTION: Ludlam Trail Corridor f — STATE ROUTE: #N/A
ROADWAY LIMITS: 0 — M.P. 0.000 TO 0.000 — ENGINEER: 0
STUDY PERIOD: FROM 1/ 2016 TO 12/ 2016 — COUNTY: Miami-Dade

No.	MILE POST	DATE	DAY	TIME	CRASH TYPE	FATAL	INJURIES	PROP DAM	DAY / NIGHT	WET / DRY	CONTRIBUTING CAUSE (VEHICLE ONLY)
829	0.000	06/27/16	Tue	1055	Left-Turn	0	0	1	Day	Dry	Not Coded
830	0.000	06/27/16	Tue	1730	Rear-End	0	0	1	Day	Dry	Not Coded
831	0.000	06/28/16	Wed	1110	Pedalcycle	0	0	1	Day	Dry	Not Coded
832	0.000	06/28/16	Wed	1845	Rear-End	0	0	1	Day	Dry	Not Coded
833	0.000	06/28/16	Wed	1819	Angle	0	0	1	Day	Dry	Not Coded
834	0.000	06/29/16	Thu	1600	Rear-End	0	0	1	Day	Dry	Not Coded
835	0.000	06/29/16	Thu	1600	Rear-End	0	0	1	Day	Dry	Not Coded
836	0.000	06/29/16	Thu	1709	Rear-End	0	0	1	Day	Dry	Not Coded
837	0.000	06/29/16	Thu	1247	Backed Into	0	0	1	Day	Dry	Not Coded
838	0.000	06/29/16	Thu	1820	Rear-End	0	0	1	Day	Dry	Not Coded
839	0.000	06/29/16	Thu	2019	Angle	0	0	1	Night	Dry	Not Coded
840	0.000	06/29/16	Thu	1755	Sideswipe	0	0	1	Day	Dry	Not Coded
841	0.000	06/29/16	Thu	1630	Angle	0	0	1	Day	Dry	Not Coded
842	0.000	06/29/16	Thu	1753	Backed Into	0	0	1	Day	Dry	Not Coded
843	0.000	06/30/16	Fri	1220	Rear-End	0	0	1	Day	Wet	Not Coded
844	0.000	06/30/16	Fri	0807	Sideswipe	0	0	1	Day	Dry	Not Coded
845	0.000	06/30/16	Fri	2353	Rear-End	0	0	1	Night	Dry	Not Coded
846	0.000	06/30/16	Fri	1427	Rear-End	0	0	1	Day	Dry	Not Coded
847	0.000	06/30/16	Fri	1243	Sideswipe	0	0	1	Day	Wet	Not Coded
848	0.000	07/01/16	Sat	1342	Rear-End	0	0	1	Day	Dry	Not Coded
849	0.000	07/01/16	Sat	1722	Rear-End	0	0	1	Day	Wet	Not Coded
850	0.000	07/01/16	Sat	0741	Rear-End	0	0	1	Day	Wet	Not Coded
851	0.000	07/04/16	Tue	1137	Angle	0	0	1	Day	Dry	Not Coded
852	0.000	07/05/16	Wed	1930	Left-Turn	0	0	1	Day	Dry	Not Coded
853	0.000	07/05/16	Wed	1100	Angle	0	0	1	Day	Dry	Not Coded
854	0.000	07/05/16	Wed	0723	Rear-End	0	0	1	Day	Dry	Not Coded
855	0.000	07/06/16	Thu	2220	Sideswipe	0	0	1	Night	Dry	Not Coded
856	0.000	07/06/16	Thu	1515	Angle	0	0	1	Day	Dry	Not Coded
857	0.000	07/06/16	Thu	1558	Rear-End	0	0	1	Day	Dry	Not Coded
858	0.000	07/06/16	Thu	1758	Rear-End	0	0	1	Day	Dry	Not Coded
859	0.000	07/07/16	Fri	1830	Rear-End	0	0	1	Day	Dry	Not Coded
860	0.000	07/08/16	Sat	1250	Left-Turn	0	0	1	Day	Dry	Not Coded
861	0.000	07/08/16	Sat	2306	Left-Turn	0	0	1	Night	Dry	Not Coded
862	0.000	07/08/16	Sat	1445	Left-Turn	0	0	1	Day	Dry	Not Coded
863	0.000	07/08/16	Sat	1140	Angle	0	0	1	Day	Dry	Not Coded
864	0.000	07/08/16	Sat	0836	Sideswipe	0	0	1	Day	Dry	Not Coded
865	0.000	07/09/16	Sun	1250	Rear-End	0	0	1	Day	Dry	Not Coded
866	0.000	07/09/16	Sun	1040	Parked Motor Vehicle	0	0	1	Day	Dry	Not Coded
867	0.000	07/10/16	Mon	2239	Angle	0	0	1	Night	Dry	Not Coded
868	0.000	07/11/16	Tue	0755	Rear-End	0	0	1	Day	Dry	Not Coded
869	0.000	07/11/16	Tue	0857	Rear-End	0	0	1	Day	Dry	Not Coded
870	0.000	07/11/16	Tue	1645	Rear-End	0	0	1	Day	Dry	Not Coded
871	0.000	07/11/16	Tue	2140	Left-Turn	0	0	1	Night	Dry	Not Coded
872	0.000	07/12/16	Wed	1254	Rear-End	0	0	1	Day	Dry	Not Coded
873	0.000	07/12/16	Wed	1827	Rear-End	0	0	1	Day	Dry	Not Coded
874	0.000	07/13/16	Thu	2105	Right-Turn	0	0	1	Night	Dry	Not Coded
875	0.000	07/13/16	Thu	2045	Rear-End	0	0	1	Night	Dry	Not Coded
876	0.000	07/13/16	Thu	0801	Rear-End	0	0	1	Day	Wet	Not Coded
877	0.000	07/13/16	Thu	1420	Left-Turn	0	0	1	Day	Dry	Not Coded
878	0.000	07/13/16	Thu	1524	Left-Turn	0	0	1	Day	Dry	Not Coded
879	0.000	07/14/16	Fri	1400	Angle	0	0	1	Day	Dry	Not Coded
880	0.000	07/14/16	Fri	1100	Rear-End	0	1	0	Day	Dry	Not Coded
881	0.000	07/14/16	Fri	1857	Rear-End	0	0	1	Day	Dry	Not Coded
882	0.000	07/14/16	Fri	0930	Rear-End	0	0	1	Day	Dry	Not Coded
883	0.000	07/15/16	Sat	1430	Rear-End	0	0	1	Day	Dry	Not Coded
884	0.000	07/15/16	Sat	1834	Sideswipe	0	0	1	Day	Dry	Not Coded
885	0.000	07/16/16	Sun	1020	Left-Turn	0	0	1	Day	Dry	Not Coded
886	0.000	07/16/16	Sun	1506	Right-Turn	0	0	1	Day	Dry	Not Coded
887	0.000	07/16/16	Sun	1152	Rear-End	0	0	1	Day	Dry	Not Coded
888	0.000	07/16/16	Sun	1106	Rear-End	0	0	1	Day	Dry	Not Coded
889	0.000	07/18/16	Tue	1235	Other Non-Fixed Object	0	0	1	Day	Dry	Not Coded
890	0.000	07/19/16	Wed	1632	Sideswipe	0	0	1	Day	Dry	Not Coded
891	0.000	07/20/16	Thu	0824	Rear-End	0	0	1	Day	Dry	Not Coded
892	0.000	07/20/16	Thu	1456	Rear-End	0	1	0	Day	Dry	Not Coded
893	0.000	07/20/16	Thu	1803	Angle	0	0	1	Day	Dry	Not Coded
894	0.000	07/20/16	Thu	1945	Rear-End	0	0	1	Day	Dry	Not Coded
895	0.000	07/20/16	Thu	1216	Rear-End	0	0	1	Day	Dry	Not Coded
896	0.000	07/21/16	Fri	1811	Rear-End	0	0	1	Day	Dry	Not Coded
897	0.000	07/21/16	Fri	1909	Rear-End	0	0	1	Day	Dry	Not Coded

State of Florida Department of Transportation
CRASH SUMMARY

SECTION: Ludlam Trail Corridor f — STATE ROUTE: #N/A
ROADWAY LIMITS: 0 — M.P. 0.000 TO 0.000 — ENGINEER: 0
STUDY PERIOD: FROM 1/ 2016 TO 12/ 2016 — COUNTY: Miami-Dade

No.	MILE POST	DATE	DAY	TIME	CRASH TYPE	FATAL	INJURIES	PROP DAM	DAY / NIGHT	WET / DRY	CONTRIBUTING CAUSE (VEHICLE ONLY)
898	0.000	07/21/16	Fri	1730	Rear-End	0	0	1	Day	Dry	Not Coded
899	0.000	07/21/16	Fri	1520	Left-Turn	0	0	1	Day	Dry	Not Coded
900	0.000	07/22/16	Sat	2030	Sideswipe	0	0	1	Night	Wet	Not Coded
901	0.000	07/22/16	Sat	1645	Rear-End	0	0	1	Day	Wet	Not Coded
902	0.000	07/22/16	Sat	1355	Rear-End	0	0	1	Day	Dry	Not Coded
903	0.000	07/22/16	Sat	1733	Rear-End	0	0	1	Day	Wet	Not Coded
904	0.000	07/22/16	Sat	1430	Left-Turn	0	0	1	Day	Wet	Not Coded
905	0.000	07/23/16	Sun	2100	Angle	0	0	1	Night	Wet	Not Coded
906	0.000	07/25/16	Tue	1650	Parked Motor Vehicle	0	0	1	Day	Dry	Not Coded
907	0.000	07/25/16	Tue	0900	Left-Turn	0	0	1	Day	Dry	Not Coded
908	0.000	07/25/16	Tue	1444	Sideswipe	0	0	1	Day	Dry	Not Coded
909	0.000	07/26/16	Wed	1240	Angle	0	0	1	Day	Dry	Not Coded
910	0.000	07/26/16	Wed	1724	Angle	0	0	1	Day	Dry	Not Coded
911	0.000	07/26/16	Wed	1524	Rear-End	0	0	1	Day	Dry	Not Coded
912	0.000	07/26/16	Wed	1523	Left-Turn	0	0	1	Day	Dry	Not Coded
913	0.000	07/26/16	Wed	1855	Rear-End	0	0	1	Day	Dry	Not Coded
914	0.000	07/27/16	Thu	1110	Rear-End	0	0	1	Day	Dry	Not Coded
915	0.000	07/27/16	Thu	1340	Angle	0	0	1	Day	Dry	Not Coded
916	0.000	07/27/16	Thu	2250	Sideswipe	0	1	0	Night	Dry	Not Coded
917	0.000	07/27/16	Thu	1108	Rear-End	0	0	1	Day	Dry	Not Coded
918	0.000	07/28/16	Fri	0813	Rear-End	0	0	1	Day	Dry	Not Coded
919	0.000	07/28/16	Fri	1903	Curb	0	0	1	Day	Dry	Not Coded
920	0.000	07/28/16	Fri	1708	Rear-End	0	1	0	Day	Dry	Not Coded
921	0.000	07/28/16	Fri	1400	Angle	0	0	1	Day	Dry	Not Coded
922	0.000	07/28/16	Fri	2145	Rear-End	0	1	0	Night	Dry	Not Coded
923	0.000	07/28/16	Fri	0900	Rear-End	0	0	1	Day	Dry	Not Coded
924	0.000	07/28/16	Fri	1919	Rear-End	0	0	1	Day	Dry	Not Coded
925	0.000	07/28/16	Fri	1820	Sideswipe	0	0	1	Day	Dry	Not Coded
926	0.000	07/28/16	Fri	1746	Angle	0	0	1	Day	Dry	Not Coded
927	0.000	07/29/16	Sat	1945	Sideswipe	0	0	1	Day	Dry	Not Coded
928	0.000	07/29/16	Sat	1518	Rear-End	0	0	1	Day	Dry	Not Coded
929	0.000	07/29/16	Sat	1305	Rear-End	0	0	1	Day	Dry	Not Coded
930	0.000	07/30/16	Sun	1850	Rear-End	0	0	1	Day	Dry	Not Coded
931	0.000	07/30/16	Sun	1230	Right-Turn	0	0	1	Day	Dry	Not Coded
932	0.000	07/30/16	Sun	1547	Left-Turn	0	0	1	Day	Dry	Not Coded
933	0.000	07/30/16	Sun	1454	Rear-End	0	0	1	Day	Dry	Not Coded
934	0.000	07/30/16	Sun	2224	Rear-End	0	0	1	Night	Dry	Not Coded
935	0.000	08/01/16	Tue	1814	Rear-End	0	0	1	Day	Dry	Not Coded
936	0.000	08/01/16	Tue	0836	Rear-End	0	0	1	Day	Dry	Not Coded
937	0.000	08/02/16	Wed	1445	Rear-End	0	0	1	Day	Dry	Not Coded
938	0.000	08/02/16	Wed	1415	Angle	0	0	1	Day	Dry	Not Coded
939	0.000	08/02/16	Wed	0130	Left-Turn	0	0	1	Night	Wet	Not Coded
940	0.000	08/02/16	Wed	1740	Left-Turn	0	0	1	Day	Dry	Not Coded
941	0.000	08/02/16	Wed	1410	Rear-End	0	0	1	Day	Dry	Not Coded
942	0.000	08/02/16	Wed	1020	Right-Turn	0	0	1	Day	Dry	Not Coded
943	0.000	08/02/16	Wed	2237	Angle	0	0	1	Night	Wet	Not Coded
944	0.000	08/03/16	Thu	1702	Parked Motor Vehicle	0	0	1	Day	Dry	Not Coded
945	0.000	08/03/16	Thu	1415	Rear-End	0	0	1	Day	Dry	Not Coded
946	0.000	08/03/16	Thu	1145	Sideswipe	0	0	1	Day	Dry	Not Coded
947	0.000	08/03/16	Thu	0850	Sideswipe	0	0	1	Day	Dry	Not Coded
948	0.000	08/03/16	Thu	0815	Left-Turn	0	0	1	Day	Wet	Not Coded
949	0.000	08/04/16	Fri	1657	Tree (Standing)	0	1	0	Day	Dry	Not Coded
950	0.000	08/04/16	Fri	1102	Left-Turn	0	1	0	Day	Dry	Not Coded
951	0.000	08/04/16	Fri	0833	Angle	0	0	1	Day	Dry	Not Coded
952	0.000	08/05/16	Sat	1443	Rear-End	0	1	0	Day	Dry	Not Coded
953	0.000	08/05/16	Sat	1245	Left-Turn	0	0	1	Day	Dry	Not Coded
954	0.000	08/05/16	Sat	1116	Angle	0	0	1	Day	Dry	Not Coded
955	0.000	08/05/16	Sat	1700	Rear-End	0	0	1	Day	Dry	Not Coded
956	0.000	08/05/16	Sat	0959	Sideswipe	0	0	1	Day	Dry	Not Coded
957	0.000	08/05/16	Sat	1220	Left-Turn	0	0	1	Day	Dry	Not Coded
958	0.000	08/05/16	Sat	0920	Sideswipe	0	1	0	Day	Dry	Not Coded
959	0.000	08/05/16	Sat	1903	Angle	0	0	1	Day	Dry	Not Coded
960	0.000	08/06/16	Sun	1420	Sideswipe	0	0	1	Day	Dry	Not Coded
961	0.000	08/06/16	Sun	2014	Sideswipe	0	0	1	Night	Wet	Not Coded
962	0.000	08/06/16	Sun	1613	Parked Motor Vehicle	0	1	0	Day	Dry	Not Coded
963	0.000	08/06/16	Sun	1145	Left-Turn	0	0	1	Day	Dry	Not Coded
964	0.000	08/07/16	Mon	1710	Left-Turn	0	0	1	Day	Wet	Not Coded
965	0.000	08/07/16	Mon	1715	Angle	0	0	1	Day	Wet	Not Coded
966	0.000	08/08/16	Tue	1323	Rear-End	0	0	1	Day	Wet	Not Coded

State of Florida Department of Transportation
CRASH SUMMARY

SECTION: Ludlam Trail Corridor f — STATE ROUTE: #N/A
ROADWAY LIMITS: 0 — M.P. 0.000 TO 0.000 — ENGINEER: 0
STUDY PERIOD: FROM 1/ 2016 TO 12/ 2016 — COUNTY: Miami-Dade

No.	MILE POST	DATE	DAY	TIME	CRASH TYPE	FATAL	INJURIES	PROP DAM	DAY / NIGHT	WET / DRY	CONTRIBUTING CAUSE (VEHICLE ONLY)
967	0.000	08/08/16	Tue	1458	Rear-End	0	0	1	Day	Wet	Not Coded
968	0.000	08/08/16	Tue	1429	Angle	0	1	0	Day	Wet	Not Coded
969	0.000	08/08/16	Tue	1725	Rear-End	0	0	1	Day	Wet	Not Coded
970	0.000	08/08/16	Tue	1936	Backed Into	0	0	1	Day	Dry	Not Coded
971	0.000	08/08/16	Tue	0215	Rear-End	0	1	0	Night	Wet	Not Coded
972	0.000	08/08/16	Tue	1646	Backed Into	0	0	1	Day	Wet	Not Coded
973	0.000	08/09/16	Wed	2045	Rear-End	0	0	1	Night	Wet	Not Coded
974	0.000	08/10/16	Thu	1330	Sideswipe	0	0	1	Day	Dry	Not Coded
975	0.000	08/10/16	Thu	1045	Sideswipe	0	0	1	Day	Dry	Not Coded
976	0.000	08/10/16	Thu	1830	Rear-End	0	0	1	Day	Dry	Not Coded
977	0.000	08/10/16	Thu	1619	Angle	0	0	1	Day	Dry	Not Coded
978	0.000	08/10/16	Thu	0900	Rear-End	0	0	1	Day	Dry	Not Coded
979	0.000	08/11/16	Fri	1145	Angle	0	0	1	Day	Dry	Not Coded
980	0.000	08/11/16	Fri	1720	Left-Turn	0	0	1	Day	Dry	Not Coded
981	0.000	08/11/16	Fri	1240	Rear-End	0	0	1	Day	Dry	Not Coded
982	0.000	08/11/16	Fri	1915	Not Coded	0	0	1	Day	Dry	Not Coded
983	0.000	08/11/16	Fri	1650	Angle	0	0	1	Day	Dry	Not Coded
984	0.000	08/12/16	Sat	1546	Angle	0	0	1	Day	Dry	Not Coded
985	0.000	08/12/16	Sat	1625	Rear-End	0	0	1	Day	Dry	Not Coded
986	0.000	08/13/16	Sun	1545	Rear-End	0	0	1	Day	Dry	Not Coded
987	0.000	08/14/16	Mon	0515	Rear-End	0	0	1	Night	Dry	Not Coded
988	0.000	08/14/16	Mon	1210	Rear-End	0	0	1	Day	Wet	Not Coded
989	0.000	08/15/16	Tue	1735	Rear-End	0	0	1	Day	Dry	Not Coded
990	0.000	08/15/16	Tue	1635	Angle	0	0	1	Day	Dry	Not Coded
991	0.000	08/15/16	Tue	0004	Backed Into	0	0	1	Night	Dry	Not Coded
992	0.000	08/15/16	Tue	1220	Angle	0	0	1	Day	Dry	Not Coded
993	0.000	08/15/16	Tue	2250	Sideswipe	0	0	1	Night	Dry	Not Coded
994	0.000	08/16/16	Wed	0010	Rear-End	0	0	1	Night	Dry	Not Coded
995	0.000	08/16/16	Wed	0811	Sideswipe	0	0	1	Day	Dry	Not Coded
996	0.000	08/17/16	Thu	1727	Sideswipe	0	0	1	Day	Dry	Not Coded
997	0.000	08/17/16	Thu	0930	Not Coded	0	0	1	Day	Wet	Not Coded
998	0.000	08/17/16	Thu	1515	Right-Turn	0	0	1	Day	Dry	Not Coded
999	0.000	08/17/16	Thu	1350	Angle	0	0	1	Day	Dry	Not Coded
1000	0.000	08/17/16	Thu	2254	Parked Motor Vehicle	0	0	1	Night	Dry	Not Coded
1001	0.000	08/18/16	Fri	1010	Left-Turn	0	0	1	Day	Dry	Not Coded
1002	0.000	08/18/16	Fri	1800	Rear-End	0	0	1	Day	Dry	Not Coded
1003	0.000	08/18/16	Fri	1330	Rear-End	0	0	1	Day	Dry	Not Coded
1004	0.000	08/18/16	Fri	0935	Not Coded	0	0	1	Day	Wet	Not Coded
1005	0.000	08/18/16	Fri	0955	Right-Turn	0	0	1	Day	Dry	Not Coded
1006	0.000	08/18/16	Fri	1610	Rear-End	0	0	1	Day	Dry	Not Coded
1007	0.000	08/19/16	Sat	1824	Left-Turn	0	0	1	Day	Dry	Not Coded
1008	0.000	08/19/16	Sat	0810	Rear-End	0	0	1	Day	Dry	Not Coded
1009	0.000	08/19/16	Sat	0055	Sideswipe	0	0	1	Night	Dry	Not Coded
1010	0.000	08/20/16	Sun	1438	Rear-End	0	0	1	Day	Dry	Not Coded
1011	0.000	08/21/16	Mon	1541	Angle	0	0	1	Day	Dry	Not Coded
1012	0.000	08/22/16	Tue	1710	Sideswipe	0	0	1	Day	Dry	Not Coded
1013	0.000	08/22/16	Tue	1815	Rear-End	0	0	1	Day	Dry	Not Coded
1014	0.000	08/22/16	Tue	0804	Sideswipe	0	0	1	Day	Dry	Not Coded
1015	0.000	08/22/16	Tue	1715	Rear-End	0	0	1	Day	Dry	Not Coded
1016	0.000	08/23/16	Wed	0727	Backed Into	0	0	1	Day	Dry	Not Coded
1017	0.000	08/23/16	Wed	1435	Rear-End	0	0	1	Day	Dry	Not Coded
1018	0.000	08/23/16	Wed	1430	Head-On	0	0	1	Day	Dry	Not Coded
1019	0.000	08/23/16	Wed	1755	Parked Motor Vehicle	0	0	1	Day	Dry	Not Coded
1020	0.000	08/23/16	Wed	0958	Rear-End	0	0	1	Day	Dry	Not Coded
1021	0.000	08/24/16	Thu	0000	Left-Turn	0	0	1	Unknown	Dry	Not Coded
1022	0.000	08/24/16	Thu	0654	Rear-End	0	0	1	Day	Dry	Not Coded
1023	0.000	08/24/16	Thu	0825	Backed Into	0	0	1	Day	Dry	Not Coded
1024	0.000	08/24/16	Thu	1115	Sideswipe	0	1	0	Day	Wet	Not Coded
1025	0.000	08/24/16	Thu	1608	Angle	0	0	1	Day	Dry	Not Coded
1026	0.000	08/25/16	Fri	0815	Backed Into	0	1	0	Day	Wet	Not Coded
1027	0.000	08/25/16	Fri	1007	Sideswipe	0	0	1	Day	Dry	Not Coded
1028	0.000	08/25/16	Fri	0900	Rear-End	0	0	1	Day	Dry	Not Coded
1029	0.000	08/26/16	Sat	1532	Rear-End	0	0	1	Day	Dry	Not Coded
1030	0.000	08/26/16	Sat	1111	Angle	0	0	1	Day	Dry	Not Coded
1031	0.000	08/26/16	Sat	1908	Rear-End	0	0	1	Night	Dry	Not Coded
1032	0.000	08/26/16	Sat	0751	Angle	0	0	1	Day	Dry	Not Coded
1033	0.000	08/26/16	Sat	1425	Right-Turn	0	0	1	Day	Dry	Not Coded
1034	0.000	08/27/16	Sun	1929	Sideswipe	0	0	1	Unknown	Dry	Not Coded
1035	0.000	08/27/16	Sun	1355	Angle	0	0	1	Day	Dry	Not Coded

State of Florida Department of Transportation
CRASH SUMMARY

SECTION: Ludlam Trail Corridor f — STATE ROUTE: #N/A
ROADWAY LIMITS: 0 — M.P. 0.000 TO 0.000 — ENGINEER: 0
STUDY PERIOD: FROM 1/ 2016 TO 12/ 2016 — COUNTY: Miami-Dade

No.	MILE POST	DATE	DAY	TIME	CRASH TYPE	FATAL	INJURIES	PROP DAM	DAY / NIGHT	WET / DRY	CONTRIBUTING CAUSE (VEHICLE ONLY)
1036	0.000	08/27/16	Sun	1732	Sideswipe	0	0	1	Day	Dry	Not Coded
1037	0.000	08/27/16	Sun	1340	Left-Turn	0	0	1	Day	Dry	Not Coded
1038	0.000	08/27/16	Sun	1720	Sideswipe	0	0	1	Day	Dry	Not Coded
1039	0.000	08/28/16	Mon	1225	Angle	0	1	0	Day	Dry	Not Coded
1040	0.000	08/28/16	Mon	1720	Left-Turn	0	0	1	Day	Dry	Not Coded
1041	0.000	08/28/16	Mon	1028	Sideswipe	0	1	0	Day	Dry	Not Coded
1042	0.000	08/29/16	Tue	1035	Rear-End	0	0	1	Day	Wet	Not Coded
1043	0.000	08/29/16	Tue	0832	Rear-End	0	0	1	Day	Wet	Not Coded
1044	0.000	08/29/16	Tue	1735	Rear-End	0	0	1	Day	Dry	Not Coded
1045	0.000	08/29/16	Tue	1840	Backed Into	0	0	1	Day	Dry	Not Coded
1046	0.000	08/29/16	Tue	0956	Rear-End	0	0	1	Day	Wet	Not Coded
1047	0.000	08/29/16	Tue	1200	Rear-End	0	0	1	Day	Dry	Not Coded
1048	0.000	08/29/16	Tue	1806	Rear-End	0	0	1	Day	Dry	Not Coded
1049	0.000	08/30/16	Wed	1328	Rear-End	0	0	1	Day	Dry	Not Coded
1050	0.000	08/30/16	Wed	1135	Backed Into	0	0	1	Day	Wet	Not Coded
1051	0.000	08/30/16	Wed	1935	Angle	0	0	1	Night	Wet	Not Coded
1052	0.000	08/30/16	Wed	2107	Left-Turn	0	0	1	Night	Wet	Not Coded
1053	0.000	08/30/16	Wed	1803	Left-Turn	0	0	1	Day	Dry	Not Coded
1054	0.000	08/30/16	Wed	1820	Sideswipe	0	0	1	Day	Dry	Not Coded
1055	0.000	08/30/16	Wed	0650	Rear-End	0	0	1	Day	Wet	Not Coded
1056	0.000	08/30/16	Wed	1853	Rear-End	0	0	1	Day	Dry	Not Coded
1057	0.000	08/31/16	Thu	1900	Rear-End	0	0	1	Night	Dry	Not Coded
1058	0.000	08/31/16	Thu	1500	Sideswipe	0	0	1	Day	Dry	Not Coded
1059	0.000	08/31/16	Thu	1639	Angle	0	1	0	Night	Dry	Not Coded
1060	0.000	08/31/16	Thu	2305	Angle	0	0	1	Night	Wet	Not Coded
1061	0.000	08/31/16	Thu	0743	Rear-End	0	0	1	Day	Dry	Not Coded
1062	0.000	08/31/16	Thu	0733	Angle	0	0	1	Day	Dry	Not Coded
1063	0.000	08/31/16	Thu	2036	Sideswipe	0	0	1	Night	Dry	Not Coded
1064	0.000	08/31/16	Thu	1420	Rear-End	0	0	1	Day	Dry	Not Coded
1065	0.000	09/01/16	Fri	1220	Rear-End	0	0	1	Day	Dry	Not Coded
1066	0.000	09/02/16	Sat	1434	Rear-End	0	1	0	Day	Dry	Not Coded
1067	0.000	09/02/16	Sat	1000	Rear-End	0	1	0	Day	Dry	Not Coded
1068	0.000	09/02/16	Sat	1254	Left-Turn	0	1	0	Day	Dry	Not Coded
1069	0.000	09/02/16	Sat	1856	Rear-End	0	0	1	Day	Dry	Not Coded
1070	0.000	09/02/16	Sat	0710	Rear-End	0	0	1	Day	Dry	Not Coded
1071	0.000	09/02/16	Sat	1200	Backed Into	0	0	1	Day	Dry	Not Coded
1072	0.000	09/03/16	Sun	0903	Sideswipe	0	0	1	Day	Dry	Not Coded
1073	0.000	09/04/16	Mon	1235	Angle	0	0	1	Day	Dry	Not Coded
1074	0.000	09/04/16	Mon	2010	Sideswipe	0	0	1	Night	Dry	Not Coded
1075	0.000	09/05/16	Tue	0949	Rear-End	0	1	0	Day	Dry	Not Coded
1076	0.000	09/06/16	Wed	1725	Rear-End	0	0	1	Day	Wet	Not Coded
1077	0.000	09/06/16	Wed	1000	Right-Turn	0	0	1	Day	Dry	Not Coded
1078	0.000	09/06/16	Wed	1755	Rear-End	0	0	1	Day	Wet	Not Coded
1079	0.000	09/06/16	Wed	1900	Rear-End	0	0	1	Day	Wet	Not Coded
1080	0.000	09/06/16	Wed	1740	Backed Into	0	0	1	Day	Wet	Not Coded
1081	0.000	09/06/16	Wed	1702	Backed Into	0	0	1	Day	Dry	Not Coded
1082	0.000	09/06/16	Wed	2114	Rear-End	0	1	0	Night	Dry	Not Coded
1083	0.000	09/06/16	Wed	1135	Rear-End	0	0	1	Day	Dry	Not Coded
1084	0.000	09/07/16	Thu	1037	Rear-End	0	0	1	Day	Wet	Not Coded
1085	0.000	09/07/16	Thu	1606	Rear-End	0	0	1	Day	Dry	Not Coded
1086	0.000	09/07/16	Thu	1630	Rear-End	0	0	1	Day	Dry	Not Coded
1087	0.000	09/07/16	Thu	2048	Angle	0	0	1	Night	Dry	Not Coded
1088	0.000	09/07/16	Thu	1216	Left-Turn	0	0	1	Day	Dry	Not Coded
1089	0.000	09/08/16	Fri	1018	Rear-End	0	0	1	Day	Dry	Not Coded
1090	0.000	09/08/16	Fri	1505	Angle	0	0	1	Day	Dry	Not Coded
1091	0.000	09/08/16	Fri	1019	Angle	0	0	1	Day	Dry	Not Coded
1092	0.000	09/08/16	Fri	0815	Sideswipe	0	0	1	Day	Wet	Not Coded
1093	0.000	09/08/16	Fri	1304	Left-Turn	0	0	1	Day	Dry	Not Coded
1094	0.000	09/08/16	Fri	1205	Angle	0	0	1	Day	Dry	Not Coded
1095	0.000	09/09/16	Sat	0831	Rear-End	0	0	1	Day	Dry	Not Coded
1096	0.000	09/09/16	Sat	0725	Left-Turn	0	0	1	Day	Dry	Not Coded
1097	0.000	09/09/16	Sat	1750	Angle	0	0	1	Day	Dry	Not Coded
1098	0.000	09/09/16	Sat	1647	Rear-End	0	0	1	Day	Dry	Not Coded
1099	0.000	09/09/16	Sat	0819	Sideswipe	0	0	1	Day	Dry	Not Coded
1100	0.000	09/10/16	Sun	1148	Angle	0	1	0	Day	Dry	Not Coded
1101	0.000	09/10/16	Sun	1520	Rear-End	0	0	1	Day	Dry	Not Coded
1102	0.000	09/11/16	Mon	0952	Rear-End	0	0	1	Day	Dry	Not Coded
1103	0.000	09/11/16	Mon	0910	Rear-End	0	0	1	Day	Dry	Not Coded
1104	0.000	09/11/16	Mon	0630	Left-Turn	0	0	1	Night	Dry	Not Coded

State of Florida Department of Transportation
CRASH SUMMARY

SECTION: Ludlam Trail Corridor f — STATE ROUTE: #N/A
ROADWAY LIMITS: 0 — M.P. 0.000 TO 0.000 — ENGINEER: 0
STUDY PERIOD: FROM 1/ 2016 TO 12/ 2016 — COUNTY: Miami-Dade

No.	MILE POST	DATE	DAY	TIME	CRASH TYPE	FATAL	INJURIES	PROP DAM	DAY / NIGHT	WET / DRY	CONTRIBUTING CAUSE (VEHICLE ONLY)
1105	0.000	09/11/16	Mon	1551	Rear-End	0	0	1	Day	Dry	Not Coded
1106	0.000	09/11/16	Mon	0300	Rear-End	0	0	1	Night	Dry	Not Coded
1107	0.000	09/12/16	Tue	1330	Parked Motor Vehicle	0	1	0	Day	Dry	Not Coded
1108	0.000	09/12/16	Tue	0940	Rear-End	0	0	1	Day	Dry	Not Coded
1109	0.000	09/12/16	Tue	1516	Rear-End	0	0	1	Day	Dry	Not Coded
1110	0.000	09/12/16	Tue	0735	Rear-End	0	0	1	Day	Dry	Not Coded
1111	0.000	09/12/16	Tue	2020	Rear-End	0	0	1	Night	Dry	Not Coded
1112	0.000	09/12/16	Tue	2330	Angle	0	0	1	Night	Dry	Not Coded
1113	0.000	09/12/16	Tue	0720	Left-Turn	0	0	1	Day	Dry	Not Coded
1114	0.000	09/12/16	Tue	2136	Angle	0	0	1	Night	Dry	Not Coded
1115	0.000	09/12/16	Tue	0849	Left-Turn	0	0	1	Day	Dry	Not Coded
1116	0.000	09/12/16	Tue	1543	Angle	0	0	1	Day	Dry	Not Coded
1117	0.000	09/13/16	Wed	1035	Backed Into	0	0	1	Day	Dry	Not Coded
1118	0.000	09/13/16	Wed	0950	Rear-End	0	1	0	Day	Wet	Not Coded
1119	0.000	09/13/16	Wed	1749	Rear-End	0	0	1	Day	Dry	Not Coded
1120	0.000	09/13/16	Wed	2015	Rear-End	0	0	1	Night	Dry	Not Coded
1121	0.000	09/13/16	Wed	0648	Rear-End	0	0	1	Night	Dry	Not Coded
1122	0.000	09/13/16	Wed	1335	Backed Into	0	0	1	Day	Dry	Not Coded
1123	0.000	09/14/16	Thu	1550	Rear-End	0	0	1	Day	Dry	Not Coded
1124	0.000	09/14/16	Thu	1013	Angle	0	0	1	Day	Dry	Not Coded
1125	0.000	09/14/16	Thu	1844	Rear-End	0	0	1	Day	Dry	Not Coded
1126	0.000	09/14/16	Thu	1259	Angle	0	0	1	Day	Dry	Not Coded
1127	0.000	09/14/16	Thu	1207	Sideswipe	0	0	1	Day	Dry	Not Coded
1128	0.000	09/15/16	Fri	1510	Angle	0	0	1	Day	Dry	Not Coded
1129	0.000	09/15/16	Fri	0640	Rear-End	0	0	1	Day	Dry	Not Coded
1130	0.000	09/15/16	Fri	1034	Right-Turn	0	0	1	Day	Dry	Not Coded
1131	0.000	09/15/16	Fri	1124	Sideswipe	0	0	1	Day	Dry	Not Coded
1132	0.000	09/15/16	Fri	1655	Rear-End	0	0	1	Day	Dry	Not Coded
1133	0.000	09/16/16	Sat	0917	Angle	0	1	0	Day	Dry	Not Coded
1134	0.000	09/16/16	Sat	1733	Right-Turn	0	0	1	Day	Dry	Not Coded
1135	0.000	09/16/16	Sat	1140	Angle	0	0	1	Day	Dry	Not Coded
1136	0.000	09/16/16	Sat	2015	Right-Turn	0	0	1	Night	Dry	Not Coded
1137	0.000	09/16/16	Sat	0801	Angle	0	0	1	Day	Dry	Not Coded
1138	0.000	09/18/16	Mon	2030	Angle	0	0	1	Night	Wet	Not Coded
1139	0.000	09/18/16	Mon	0210	Angle	0	0	1	Night	Dry	Not Coded
1140	0.000	09/19/16	Tue	1830	Left-Turn	0	0	1	Night	Dry	Not Coded
1141	0.000	09/19/16	Tue	1125	Rear-End	0	1	0	Day	Dry	Not Coded
1142	0.000	09/19/16	Tue	2224	Parked Motor Vehicle	0	0	1	Night	Dry	Not Coded
1143	0.000	09/19/16	Tue	1117	Sideswipe	0	0	1	Day	Dry	Not Coded
1144	0.000	09/19/16	Tue	1824	Rear-End	0	0	1	Day	Dry	Not Coded
1145	0.000	09/19/16	Tue	2215	Left-Turn	0	1	0	Night	Dry	Not Coded
1146	0.000	09/19/16	Tue	1433	Rear-End	0	0	1	Day	Wet	Not Coded
1147	0.000	09/20/16	Wed	1720	Left-Turn	0	0	1	Day	Dry	Not Coded
1148	0.000	09/20/16	Wed	0730	Angle	0	0	1	Day	Dry	Not Coded
1149	0.000	09/20/16	Wed	1050	Overturn/Rollover	0	0	1	Day	Dry	Not Coded
1150	0.000	09/21/16	Thu	0900	Sideswipe	0	0	1	Day	Dry	Not Coded
1151	0.000	09/21/16	Thu	0830	Right-Turn	0	0	1	Day	Dry	Not Coded
1152	0.000	09/21/16	Thu	0800	Sideswipe	0	0	1	Night	Dry	Not Coded
1153	0.000	09/21/16	Thu	1110	Rear-End	0	0	1	Day	Dry	Not Coded
1154	0.000	09/21/16	Thu	1756	Sideswipe	0	1	0	Night	Dry	Not Coded
1155	0.000	09/22/16	Fri	1800	Sideswipe	0	0	1	Day	Dry	Not Coded
1156	0.000	09/22/16	Fri	1800	Parked Motor Vehicle	0	0	1	Day	Dry	Not Coded
1157	0.000	09/23/16	Sat	1215	Angle	0	0	1	Day	Dry	Not Coded
1158	0.000	09/23/16	Sat	1455	Angle	0	0	1	Day	Dry	Not Coded
1159	0.000	09/23/16	Sat	1550	Angle	0	0	1	Day	Dry	Not Coded
1160	0.000	09/25/16	Mon	1132	Left-Turn	0	0	1	Day	Dry	Not Coded
1161	0.000	09/26/16	Tue	1247	Backed Into	0	0	1	Day	Dry	Not Coded
1162	0.000	09/26/16	Tue	1257	Left-Turn	0	0	1	Day	Dry	Not Coded
1163	0.000	09/26/16	Tue	1819	Rear-End	0	0	1	Day	Dry	Not Coded
1164	0.000	09/26/16	Tue	1445	Rear-End	0	0	1	Day	Dry	Not Coded
1165	0.000	09/27/16	Wed	1620	Rear-End	0	0	1	Day	Wet	Not Coded
1166	0.000	09/28/16	Thu	1945	Rear-End	0	1	0	Night	Dry	Not Coded
1167	0.000	09/28/16	Thu	1750	Rear-End	0	0	1	Day	Dry	Not Coded
1168	0.000	09/28/16	Thu	2038	Angle	0	0	1	Night	Dry	Not Coded
1169	0.000	09/29/16	Fri	1839	Left-Turn	0	0	1	Day	Wet	Not Coded
1170	0.000	09/29/16	Fri	1803	Angle	0	0	1	Day	Dry	Not Coded
1171	0.000	09/29/16	Fri	1440	Backed Into	0	0	1	Day	Dry	Not Coded
1172	0.000	09/29/16	Fri	1056	Rear-End	0	0	1	Day	Dry	Not Coded
1173	0.000	09/29/16	Fri	1503	Left-Turn	0	0	1	Day	Dry	Not Coded

State of Florida Department of Transportation
CRASH SUMMARY

SECTION: Ludlam Trail Corridor f — STATE ROUTE: #N/A
ROADWAY LIMITS: 0 — M.P. 0.000 TO 0.000 — ENGINEER: 0
STUDY PERIOD: FROM 1/ 2016 TO 12/ 2016 — COUNTY: Miami-Dade

No.	MILE POST	DATE	DAY	TIME	CRASH TYPE	FATAL	INJURIES	PROP DAM	DAY / NIGHT	WET / DRY	CONTRIBUTING CAUSE (VEHICLE ONLY)
1174	0.000	09/29/16	Fri	1107	Angle	0	0	1	Day	Dry	Not Coded
1175	0.000	09/29/16	Fri	1859	Left-Turn	0	0	1	Day	Dry	Not Coded
1176	0.000	09/29/16	Fri	1610	Right-Turn	0	0	1	Day	Dry	Not Coded
1177	0.000	09/29/16	Fri	0840	Sideswipe	0	0	1	Day	Dry	Not Coded
1178	0.000	09/30/16	Sat	1905	Pedalcycle	0	0	1	Night	Dry	Not Coded
1179	0.000	10/02/16	Mon	1305	Rear-End	0	0	1	Day	Dry	Not Coded
1180	0.000	10/03/16	Tue	2030	Rear-End	0	0	1	Night	Dry	Not Coded
1181	0.000	10/03/16	Tue	2149	Angle	0	0	1	Night	Dry	Not Coded
1182	0.000	10/03/16	Tue	1510	Left-Turn	0	0	1	Day	Dry	Not Coded
1183	0.000	10/03/16	Tue	1915	Sideswipe	0	0	1	Night	Dry	Not Coded
1184	0.000	10/03/16	Tue	1605	Rear-End	0	0	1	Day	Dry	Not Coded
1185	0.000	10/03/16	Tue	1643	Backed Into	0	0	1	Day	Dry	Not Coded
1186	0.000	10/03/16	Tue	1953	Rear-End	0	0	1	Night	Dry	Not Coded
1187	0.000	10/04/16	Wed	2100	Rear-End	0	0	1	Night	Dry	Not Coded
1188	0.000	10/04/16	Wed	1930	Other Non-Fixed Object	0	0	1	Night	Dry	Not Coded
1189	0.000	10/05/16	Thu	1455	Left-Turn	0	0	1	Day	Dry	Not Coded
1190	0.000	10/05/16	Thu	2230	Left-Turn	0	0	1	Night	Dry	Not Coded
1191	0.000	10/05/16	Thu	1313	Angle	0	0	1	Day	Dry	Not Coded
1192	0.000	10/05/16	Thu	0805	Rear-End	0	0	1	Day	Wet	Not Coded
1193	0.000	10/05/16	Thu	1458	Left-Turn	0	0	1	Day	Dry	Not Coded
1194	0.000	10/05/16	Thu	0851	Rear-End	0	0	1	Day	Dry	Not Coded
1195	0.000	10/05/16	Thu	1925	Rear-End	0	0	1	Night	Dry	Not Coded
1196	0.000	10/05/16	Thu	1655	Rear-End	0	0	1	Day	Dry	Not Coded
1197	0.000	10/07/16	Sat	1830	Rear-End	0	0	1	Night	Dry	Not Coded
1198	0.000	10/07/16	Sat	1915	Rear-End	0	0	1	Night	Dry	Not Coded
1199	0.000	10/08/16	Sun	0153	Rear-End	0	1	0	Night	Dry	Not Coded
1200	0.000	10/08/16	Sun	0000	Rear-End	0	1	0	Night	Dry	Not Coded
1201	0.000	10/08/16	Sun	0858	Rear-End	0	1	0	Day	Dry	Not Coded
1202	0.000	10/09/16	Mon	1213	Angle	0	0	1	Day	Dry	Not Coded
1203	0.000	10/10/16	Tue	1450	Backed Into	0	0	1	Day	Dry	Not Coded
1204	0.000	10/10/16	Tue	1546	Left-Turn	0	1	0	Day	Dry	Not Coded
1205	0.000	10/10/16	Tue	1445	Angle	0	0	1	Day	Dry	Not Coded
1206	0.000	10/11/16	Wed	1240	Rear-End	0	0	1	Day	Dry	Not Coded
1207	0.000	10/11/16	Wed	1529	Parked Motor Vehicle	0	0	1	Day	Dry	Not Coded
1208	0.000	10/11/16	Wed	1100	Left-Turn	0	0	1	Day	Dry	Not Coded
1209	0.000	10/11/16	Wed	0950	Rear-End	0	0	1	Day	Dry	Not Coded
1210	0.000	10/12/16	Thu	1250	Rear-End	0	0	1	Day	Dry	Not Coded
1211	0.000	10/13/16	Fri	1426	Rear-End	0	0	1	Day	Dry	Not Coded
1212	0.000	10/13/16	Fri	0950	Rear-End	0	0	1	Day	Dry	Not Coded
1213	0.000	10/14/16	Sat	2020	Left-Turn	0	0	1	Night	Dry	Not Coded
1214	0.000	10/14/16	Sat	1429	Rear-End	0	1	0	Day	Dry	Not Coded
1215	0.000	10/15/16	Sun	0915	Rear-End	0	0	1	Day	Dry	Not Coded
1216	0.000	10/16/16	Mon	1615	Parked Motor Vehicle	0	0	1	Day	Wet	Not Coded
1217	0.000	10/16/16	Mon	1600	Angle	0	1	0	Day	Dry	Not Coded
1218	0.000	10/16/16	Mon	1710	Right-Turn	0	1	0	Day	Dry	Not Coded
1219	0.000	10/16/16	Mon	1402	Rear-End	0	0	1	Day	Dry	Not Coded
1220	0.000	10/17/16	Tue	1700	Sideswipe	0	0	1	Day	Dry	Not Coded
1221	0.000	10/17/16	Tue	1310	Angle	0	0	1	Day	Dry	Not Coded
1222	0.000	10/17/16	Tue	1352	Rear-End	0	1	0	Day	Dry	Not Coded
1223	0.000	10/17/16	Tue	1716	Left-Turn	0	0	1	Day	Dry	Not Coded
1224	0.000	10/18/16	Wed	1405	Rear-End	0	1	0	Day	Dry	Not Coded
1225	0.000	10/18/16	Wed	1100	Sideswipe	0	0	1	Day	Dry	Not Coded
1226	0.000	10/19/16	Thu	1850	Rear-End	0	0	1	Night	Dry	Not Coded
1227	0.000	10/20/16	Fri	2130	Angle	0	0	1	Night	Dry	Not Coded
1228	0.000	10/20/16	Fri	0633	Rear-End	0	0	1	Night	Dry	Not Coded
1229	0.000	10/20/16	Fri	2045	Rear-End	0	0	1	Night	Wet	Not Coded
1230	0.000	10/20/16	Fri	1411	Sideswipe	0	0	1	Day	Wet	Not Coded
1231	0.000	10/20/16	Fri	1318	Left-Turn	0	0	1	Day	Wet	Not Coded
1232	0.000	10/20/16	Fri	0725	Rear-End	0	1	0	Day	Dry	Not Coded
1233	0.000	10/21/16	Sat	0009	Left-Turn	0	0	1	Day	Dry	Not Coded
1234	0.000	10/21/16	Sat	1802	Rear-End	0	0	1	Day	Dry	Not Coded
1235	0.000	10/21/16	Sat	0820	Rear-End	0	1	0	Day	Dry	Not Coded
1236	0.000	10/21/16	Sat	1435	Left-Turn	0	0	1	Day	Dry	Not Coded
1237	0.000	10/22/16	Sun	1430	Angle	0	0	1	Day	Dry	Not Coded
1238	0.000	10/22/16	Sun	0030	Sideswipe	0	1	0	Night	Dry	Not Coded
1239	0.000	10/22/16	Sun	1625	Left-Turn	0	0	1	Day	Dry	Not Coded
1240	0.000	10/24/16	Tue	1320	Left-Turn	0	0	1	Day	Dry	Not Coded
1241	0.000	10/24/16	Tue	1410	Rear-End	0	0	1	Day	Dry	Not Coded
1242	0.000	10/24/16	Tue	1915	Rear-End	0	1	0	Night	Dry	Not Coded

State of Florida Department of Transportation
CRASH SUMMARY

SECTION: Ludlam Trail Corridor f — STATE ROUTE: #N/A
ROADWAY LIMITS: 0 — M.P. 0.000 TO 0.000 — ENGINEER: 0
STUDY PERIOD: FROM 1/ 2016 TO 12/ 2016 — COUNTY: Miami-Dade

No.	MILE POST	DATE	DAY	TIME	CRASH TYPE	FATAL	INJURIES	PROP DAM	DAY / NIGHT	WET / DRY	CONTRIBUTING CAUSE (VEHICLE ONLY)
1243	0.000	10/25/16	Wed	0100	Fell/Jumped from Motor Vehicle	0	0	1	Day	Dry	Not Coded
1244	0.000	10/25/16	Wed	0638	Not Coded	0	0	1	Day	Dry	Not Coded
1245	0.000	10/25/16	Wed	1810	Rear-End	0	0	1	Unknown	Dry	Not Coded
1246	0.000	10/25/16	Wed	0820	Rear-End	0	0	1	Day	Dry	Not Coded
1247	0.000	10/25/16	Wed	1630	Sideswipe	0	0	1	Day	Dry	Not Coded
1248	0.000	10/26/16	Thu	1349	Left-Turn	0	1	0	Day	Dry	Not Coded
1249	0.000	10/26/16	Thu	0700	Rear-End	0	0	1	Day	Dry	Not Coded
1250	0.000	10/26/16	Thu	0800	Rear-End	0	0	1	Day	Dry	Not Coded
1251	0.000	10/27/16	Fri	1545	Rear-End	0	0	1	Day	Wet	Not Coded
1252	0.000	10/27/16	Fri	2029	Rear-End	0	0	1	Night	Wet	Not Coded
1253	0.000	10/27/16	Fri	0822	Angle	0	1	0	Day	Dry	Not Coded
1254	0.000	10/27/16	Fri	0950	Rear-End	0	1	0	Day	Dry	Not Coded
1255	0.000	10/28/16	Sat	1300	Rear-End	0	0	1	Day	Dry	Not Coded
1256	0.000	10/28/16	Sat	1605	Angle	0	0	1	Day	Dry	Not Coded
1257	0.000	10/28/16	Sat	0850	Parked Motor Vehicle	0	0	1	Day	Dry	Not Coded
1258	0.000	10/28/16	Sat	0647	Parked Motor Vehicle	0	0	1	Day	Wet	Not Coded
1259	0.000	10/30/16	Mon	1738	Angle	0	0	1	Day	Dry	Not Coded
1260	0.000	10/30/16	Mon	0943	Other Fixed Object	0	1	0	Day	Wet	Not Coded
1261	0.000	11/01/16	Wed	1300	Sideswipe	0	0	1	Day	Dry	Not Coded
1262	0.000	11/01/16	Wed	1220	Rear-End	0	0	1	Day	Dry	Not Coded
1263	0.000	11/02/16	Thu	1320	Left-Turn	0	0	1	Day	Dry	Not Coded
1264	0.000	11/03/16	Fri	1900	Head-On	0	0	1	Night	Wet	Not Coded
1265	0.000	11/03/16	Fri	1550	Angle	0	0	1	Day	Wet	Not Coded
1266	0.000	11/04/16	Sat	2220	Left-Turn	0	0	1	Night	Dry	Not Coded
1267	0.000	11/04/16	Sat	1946	Angle	0	0	1	Night	Dry	Not Coded
1268	0.000	11/05/16	Sun	1308	Left-Turn	0	0	1	Day	Dry	Not Coded
1269	0.000	11/06/16	Mon	0850	Sideswipe	0	1	0	Day	Dry	Not Coded
1270	0.000	11/07/16	Tue	0844	Rear-End	0	0	1	Day	Dry	Not Coded
1271	0.000	11/07/16	Tue	0902	Rear-End	0	0	1	Day	Dry	Not Coded
1272	0.000	11/07/16	Tue	1227	Rear-End	0	1	0	Day	Dry	Not Coded
1273	0.000	11/07/16	Tue	1714	Right-Turn	0	0	1	Day	Dry	Not Coded
1274	0.000	11/08/16	Wed	0751	Sideswipe	0	0	1	Day	Dry	Not Coded
1275	0.000	11/08/16	Wed	1800	Rear-End	0	0	1	Night	Dry	Not Coded
1276	0.000	11/11/16	Sat	1755	Rear-End	0	0	1	Night	Dry	Not Coded
1277	0.000	11/11/16	Sat	0926	Sideswipe	0	1	0	Day	Dry	Not Coded
1278	0.000	11/11/16	Sat	1115	Left-Turn	0	0	1	Day	Dry	Not Coded
1279	0.000	11/12/16	Sun	1620	Sideswipe	0	0	1	Day	Dry	Not Coded
1280	0.000	11/14/16	Tue	0705	Rear-End	0	0	1	Day	Dry	Not Coded
1281	0.000	11/14/16	Tue	1922	Rear-End	0	0	1	Night	Dry	Not Coded
1282	0.000	11/15/16	Wed	0642	Left-Turn	0	0	1	Night	Dry	Not Coded
1283	0.000	11/15/16	Wed	1740	Angle	0	1	0	Night	Wet	Not Coded
1284	0.000	11/15/16	Wed	1100	Sideswipe	0	1	0	Day	Dry	Not Coded
1285	0.000	11/15/16	Wed	1826	Rear-End	0	0	1	Night	Wet	Not Coded
1286	0.000	11/15/16	Wed	1720	Rear-End	0	0	1	Day	Wet	Not Coded
1287	0.000	11/16/16	Thu	1520	Left-Turn	0	0	1	Day	Dry	Not Coded
1288	0.000	11/16/16	Thu	0746	Rear-End	0	0	1	Day	Dry	Not Coded
1289	0.000	11/16/16	Thu	1030	Left-Turn	0	0	1	Day	Dry	Not Coded
1290	0.000	11/17/16	Fri	1840	Sideswipe	0	0	1	Night	Dry	Not Coded
1291	0.000	11/17/16	Fri	0837	Rear-End	0	0	1	Day	Dry	Not Coded
1292	0.000	11/17/16	Fri	0710	Rear-End	0	0	1	Day	Dry	Not Coded
1293	0.000	11/17/16	Fri	2221	Angle	0	0	1	Night	Dry	Not Coded
1294	0.000	11/18/16	Sat	0747	Rear-End	0	0	1	Day	Dry	Not Coded
1295	0.000	11/18/16	Sat	1855	Rear-End	0	0	1	Day	Dry	Not Coded
1296	0.000	11/18/16	Sat	0927	Angle	0	1	0	Day	Dry	Not Coded
1297	0.000	11/19/16	Sun	1220	Left-Turn	0	0	1	Day	Dry	Not Coded
1298	0.000	11/20/16	Mon	1835	Rear-End	1	0	0	Night	Dry	Not Coded
1299	0.000	11/20/16	Mon	1610	Left-Turn	0	0	1	Day	Dry	Not Coded
1300	0.000	11/20/16	Mon	2014	Left-Turn	0	0	1	Day	Dry	Not Coded
1301	0.000	11/21/16	Tue	2022	Rear-End	0	0	1	Night	Dry	Not Coded
1302	0.000	11/21/16	Tue	0805	Left-Turn	0	0	1	Day	Dry	Not Coded
1303	0.000	11/22/16	Wed	1257	Rear-End	0	0	1	Day	Dry	Not Coded
1304	0.000	11/22/16	Wed	1553	Rear-End	0	0	1	Day	Dry	Not Coded
1305	0.000	11/22/16	Wed	1717	Backed Into	0	0	1	Night	Dry	Not Coded
1306	0.000	11/22/16	Wed	2105	Rear-End	0	0	1	Night	Dry	Not Coded
1307	0.000	11/22/16	Wed	1120	Rear-End	0	0	1	Day	Dry	Not Coded
1308	0.000	11/22/16	Wed	0818	Angle	0	1	0	Day	Dry	Not Coded
1309	0.000	11/22/16	Wed	1640	Angle	0	0	1	Day	Dry	Not Coded
1310	0.000	11/22/16	Wed	1420	Rear-End	0	0	1	Day	Dry	Not Coded
1311	0.000	11/23/16	Thu	1850	Rear-End	0	0	1	Night	Dry	Not Coded

State of Florida Department of Transportation
CRASH SUMMARY

SECTION: Ludlam Trail Corridor f — STATE ROUTE: #N/A
ROADWAY LIMITS: 0 — M.P. 0.000 TO 0.000 — ENGINEER: 0
STUDY PERIOD: FROM 1/ 2016 TO 12/ 2016 — COUNTY: Miami-Dade

No.	MILE POST	DATE	DAY	TIME	CRASH TYPE	FATAL	INJURIES	PROP DAM	DAY / NIGHT	WET / DRY	CONTRIBUTING CAUSE (VEHICLE ONLY)
1312	0.000	11/23/16	Thu	1305	Angle	0	0	1	Day	Dry	Not Coded
1313	0.000	11/23/16	Thu	1430	Rear-End	0	0	1	Day	Dry	Not Coded
1314	0.000	11/23/16	Thu	0820	Rear-End	0	0	1	Day	Dry	Not Coded
1315	0.000	11/25/16	Sat	0939	Rear-End	0	0	1	Day	Dry	Not Coded
1316	0.000	11/25/16	Sat	1232	Rear-End	0	0	1	Day	Dry	Not Coded
1317	0.000	11/25/16	Sat	1950	Rear-End	0	0	1	Unknown	Dry	Not Coded
1318	0.000	11/25/16	Sat	2239	Sideswipe	0	0	1	Night	Dry	Not Coded
1319	0.000	11/25/16	Sat	1843	Right-Turn	0	1	0	Night	Dry	Not Coded
1320	0.000	11/25/16	Sat	2255	Angle	0	0	1	Night	Dry	Not Coded
1321	0.000	11/26/16	Sun	1540	Left-Turn	0	0	1	Day	Dry	Not Coded
1322	0.000	11/26/16	Sun	1440	Sideswipe	0	0	1	Day	Dry	Not Coded
1323	0.000	11/27/16	Mon	1340	Sideswipe	0	0	1	Day	Dry	Not Coded
1324	0.000	11/27/16	Mon	1436	Left-Turn	0	0	1	Day	Dry	Not Coded
1325	0.000	11/27/16	Mon	1835	Left-Turn	0	0	1	Night	Dry	Not Coded
1326	0.000	11/27/16	Mon	1240	Rear-End	0	1	0	Day	Dry	Not Coded
1327	0.000	11/28/16	Tue	0917	Angle	0	0	1	Day	Dry	Not Coded
1328	0.000	11/28/16	Tue	1646	Rear-End	0	0	1	Day	Dry	Not Coded
1329	0.000	11/28/16	Tue	1005	Rear-End	0	0	1	Day	Dry	Not Coded
1330	0.000	11/28/16	Tue	1820	Other Fixed Object	0	0	1	Day	Dry	Not Coded
1331	0.000	11/29/16	Wed	1140	Not Coded	0	0	1	Day	Dry	Not Coded
1332	0.000	11/29/16	Wed	0854	Rear-End	0	0	1	Day	Dry	Not Coded
1333	0.000	11/29/16	Wed	0707	Left-Turn	0	0	1	Day	Dry	Not Coded
1334	0.000	11/29/16	Wed	0738	Sideswipe	0	0	1	Day	Dry	Not Coded
1335	0.000	11/30/16	Thu	1817	Rear-End	0	1	0	Night	Dry	Not Coded
1336	0.000	11/30/16	Thu	1410	Rear-End	0	0	1	Day	Dry	Not Coded
1337	0.000	11/30/16	Thu	1120	Rear-End	0	0	1	Day	Dry	Not Coded
1338	0.000	11/30/16	Thu	1305	Rear-End	0	0	1	Day	Dry	Not Coded
1339	0.000	12/01/16	Fri	0745	Utility Pole/Light Support	0	0	1	Day	Dry	Not Coded
1340	0.000	12/02/16	Sat	1535	Overturn/Rollover	0	0	1	Day	Wet	Not Coded
1341	0.000	12/02/16	Sat	1745	Angle	0	1	0	Day	Dry	Not Coded
1342	0.000	12/02/16	Sat	1515	Rear-End	0	0	1	Day	Wet	Not Coded
1343	0.000	12/02/16	Sat	1910	Rear-End	0	0	1	Night	Dry	Not Coded
1344	0.000	12/02/16	Sat	2147	Rear-End	0	0	1	Night	Dry	Not Coded
1345	0.000	12/02/16	Sat	1608	Angle	0	1	0	Day	Wet	Not Coded
1346	0.000	12/03/16	Sun	1927	Overturn/Rollover	0	0	1	Night	Dry	Not Coded
1347	0.000	12/03/16	Sun	2030	Parked Motor Vehicle	0	0	1	Night	Dry	Not Coded
1348	0.000	12/03/16	Sun	1245	Rear-End	0	1	0	Day	Dry	Not Coded
1349	0.000	12/03/16	Sun	1508	Backed Into	0	0	1	Day	Dry	Not Coded
1350	0.000	12/03/16	Sun	1558	Left-Turn	0	0	1	Day	Dry	Not Coded
1351	0.000	12/03/16	Sun	2000	Sideswipe	0	0	1	Night	Dry	Not Coded
1352	0.000	12/03/16	Sun	1100	Sideswipe	0	0	1	Day	Dry	Not Coded
1353	0.000	12/04/16	Mon	1752	Rear-End	0	1	0	Night	Dry	Not Coded
1354	0.000	12/04/16	Mon	1812	Rear-End	0	1	0	Night	Dry	Not Coded
1355	0.000	12/04/16	Mon	1752	Rear-End	0	0	1	Night	Dry	Not Coded
1356	0.000	12/04/16	Mon	1345	Angle	0	0	1	Day	Dry	Not Coded
1357	0.000	12/04/16	Mon	1443	Rear-End	0	1	0	Day	Dry	Not Coded
1358	0.000	12/04/16	Mon	1640	Angle	0	0	1	Day	Dry	Not Coded
1359	0.000	12/05/16	Tue	1745	Rear-End	0	0	1	Night	Dry	Not Coded
1360	0.000	12/05/16	Tue	1206	Rear-End	0	0	1	Day	Dry	Not Coded
1361	0.000	12/05/16	Tue	1500	Sideswipe	0	0	1	Day	Dry	Not Coded
1362	0.000	12/05/16	Tue	0739	Left-Turn	0	0	1	Day	Dry	Not Coded
1363	0.000	12/05/16	Tue	1651	Sideswipe	0	1	0	Day	Dry	Not Coded
1364	0.000	12/05/16	Tue	1617	Left-Turn	0	0	1	Day	Dry	Not Coded
1365	0.000	12/05/16	Tue	1746	Curb	0	0	1	Night	Dry	Not Coded
1366	0.000	12/06/16	Wed	1115	Angle	0	0	1	Day	Dry	Not Coded
1367	0.000	12/06/16	Wed	0740	Pedestrian	0	0	1	Day	Dry	Not Coded
1368	0.000	12/06/16	Wed	2044	Sideswipe	0	0	1	Night	Dry	Not Coded
1369	0.000	12/07/16	Thu	0655	Rear-End	0	0	1	Day	Dry	Not Coded
1370	0.000	12/07/16	Thu	1623	Other Non-Collision	0	0	1	Day	Dry	Not Coded
1371	0.000	12/07/16	Thu	1459	Sideswipe	0	0	1	Day	Dry	Not Coded
1372	0.000	12/07/16	Thu	1430	Angle	0	0	1	Day	Dry	Not Coded
1373	0.000	12/08/16	Fri	1900	Rear-End	0	0	1	Day	Dry	Not Coded
1374	0.000	12/08/16	Fri	1637	Rear-End	0	0	1	Day	Wet	Not Coded
1375	0.000	12/09/16	Sat	1812	Sideswipe	0	0	1	Night	Dry	Not Coded
1376	0.000	12/09/16	Sat	1555	Angle	0	0	1	Day	Dry	Not Coded
1377	0.000	12/10/16	Sun	0949	Rear-End	0	0	1	Day	Wet	Not Coded
1378	0.000	12/10/16	Sun	1200	Parked Motor Vehicle	0	0	1	Day	Wet	Not Coded
1379	0.000	12/10/16	Sun	1335	Sideswipe	0	0	1	Day	Wet	Not Coded
1380	0.000	12/10/16	Sun	2015	Angle	0	0	1	Night	Wet	Not Coded

State of Florida Department of Transportation
CRASH SUMMARY

SECTION: Ludlam Trail Corridor f — STATE ROUTE: #N/A
ROADWAY LIMITS: 0 — M.P. 0.000 TO 0.000 — ENGINEER: 0
STUDY PERIOD: FROM 1/ 2016 TO 12/ 2016 — COUNTY: Miami-Dade

No.	MILE POST	DATE	DAY	TIME	CRASH TYPE	FATAL	INJURIES	PROP DAM	DAY / NIGHT	WET / DRY	CONTRIBUTING CAUSE (VEHICLE ONLY)
1381	0.000	12/10/16	Sun	0921	Rear-End	0	0	1	Day	Wet	Not Coded
1382	0.000	12/10/16	Sun	1155	Rear-End	0	0	1	Day	Wet	Not Coded
1383	0.000	12/10/16	Sun	2035	Backed Into	0	1	0	Night	Wet	Not Coded
1384	0.000	12/10/16	Sun	0120	Angle	0	0	1	Night	Dry	Not Coded
1385	0.000	12/10/16	Sun	1538	Right-Turn	0	0	1	Day	Wet	Not Coded
1386	0.000	12/11/16	Mon	0820	Rear-End	0	0	1	Day	Wet	Not Coded
1387	0.000	12/11/16	Mon	1620	Rear-End	0	0	1	Day	Wet	Not Coded
1388	0.000	12/12/16	Tue	1051	Angle	0	0	1	Day	Dry	Not Coded
1389	0.000	12/12/16	Tue	1842	Rear-End	0	0	1	Night	Dry	Not Coded
1390	0.000	12/12/16	Tue	0735	Rear-End	0	0	1	Day	Dry	Not Coded
1391	0.000	12/12/16	Tue	1034	Left-Turn	0	0	1	Day	Dry	Not Coded
1392	0.000	12/12/16	Tue	2100	Left-Turn	0	0	1	Night	Dry	Not Coded
1393	0.000	12/13/16	Wed	1230	Angle	0	0	1	Day	Dry	Not Coded
1394	0.000	12/13/16	Wed	0713	Sideswipe	0	0	1	Day	Dry	Not Coded
1395	0.000	12/13/16	Wed	1420	Angle	0	1	0	Day	Dry	Not Coded
1396	0.000	12/13/16	Wed	0810	Angle	0	0	1	Day	Dry	Not Coded
1397	0.000	12/13/16	Wed	1200	Backed Into	0	0	1	Day	Dry	Not Coded
1398	0.000	12/13/16	Wed	1844	Sideswipe	0	0	1	Night	Dry	Not Coded
1399	0.000	12/14/16	Thu	1928	Rear-End	0	0	1	Night	Dry	Not Coded
1400	0.000	12/14/16	Thu	2050	Rear-End	0	0	1	Night	Dry	Not Coded
1401	0.000	12/14/16	Thu	1830	Rear-End	0	0	1	Night	Dry	Not Coded
1402	0.000	12/14/16	Thu	2200	Angle	0	0	1	Night	Dry	Not Coded
1403	0.000	12/14/16	Thu	1210	Left-Turn	0	0	1	Night	Dry	Not Coded
1404	0.000	12/14/16	Thu	1725	Angle	0	0	1	Night	Dry	Not Coded
1405	0.000	12/14/16	Thu	0954	Angle	0	1	0	Day	Dry	Not Coded
1406	0.000	12/15/16	Fri	1704	Angle	0	0	1	Day	Dry	Not Coded
1407	0.000	12/15/16	Fri	1156	Rear-End	0	1	0	Day	Dry	Not Coded
1408	0.000	12/15/16	Fri	1633	Rear-End	0	0	1	Day	Dry	Not Coded
1409	0.000	12/15/16	Fri	1829	Angle	0	0	1	Night	Dry	Not Coded
1410	0.000	12/15/16	Fri	0725	Left-Turn	0	0	1	Day	Dry	Not Coded
1411	0.000	12/16/16	Sat	1715	Angle	0	0	1	Night	Dry	Not Coded
1412	0.000	12/16/16	Sat	1745	Rear-End	0	0	1	Night	Dry	Not Coded
1413	0.000	12/16/16	Sat	0814	Rear-End	0	0	1	Day	Dry	Not Coded
1414	0.000	12/16/16	Sat	1730	Rear-End	0	0	1	Day	Dry	Not Coded
1415	0.000	12/17/16	Sun	1005	Sideswipe	0	1	0	Day	Dry	Not Coded
1416	0.000	12/17/16	Sun	1213	Rear-End	0	0	1	Day	Dry	Not Coded
1417	0.000	12/17/16	Sun	2224	Angle	0	0	1	Night	Dry	Not Coded
1418	0.000	12/17/16	Sun	2034	Angle	0	0	1	Night	Dry	Not Coded
1419	0.000	12/17/16	Sun	1029	Backed Into	0	0	1	Day	Dry	Not Coded
1420	0.000	12/18/16	Mon	1604	Left-Turn	0	0	1	Day	Dry	Not Coded
1421	0.000	12/18/16	Mon	2030	Rear-End	0	0	1	Night	Dry	Not Coded
1422	0.000	12/18/16	Mon	2047	Left-Turn	0	0	1	Night	Dry	Not Coded
1423	0.000	12/18/16	Mon	1141	Rear-End	0	0	1	Day	Dry	Not Coded
1424	0.000	12/19/16	Tue	1615	Rear-End	0	0	1	Day	Dry	Not Coded
1425	0.000	12/19/16	Tue	1415	Left-Turn	0	0	1	Day	Dry	Not Coded
1426	0.000	12/19/16	Tue	0842	Rear-End	0	0	1	Day	Dry	Not Coded
1427	0.000	12/19/16	Tue	1004	Left-Turn	0	0	1	Day	Dry	Not Coded
1428	0.000	12/19/16	Tue	1824	Rear-End	0	0	1	Night	Dry	Not Coded
1429	0.000	12/19/16	Tue	0807	Angle	0	0	1	Day	Dry	Not Coded
1430	0.000	12/20/16	Wed	1405	Rear-End	0	0	1	Day	Dry	Not Coded
1431	0.000	12/20/16	Wed	1701	Backed Into	0	0	1	Night	Dry	Not Coded
1432	0.000	12/21/16	Thu	1700	Not Coded	0	0	1	Night	Dry	Not Coded
1433	0.000	12/21/16	Thu	1525	Rear-End	0	0	1	Day	Dry	Not Coded
1434	0.000	12/21/16	Thu	1912	Sideswipe	0	0	1	Night	Dry	Not Coded
1435	0.000	12/21/16	Thu	1710	Angle	0	0	1	Day	Dry	Not Coded
1436	0.000	12/21/16	Thu	0639	Left-Turn	0	0	1	Night	Dry	Not Coded
1437	0.000	12/21/16	Thu	0950	Sideswipe	0	0	1	Day	Dry	Not Coded
1438	0.000	12/22/16	Fri	1700	Left-Turn	0	0	1	Night	Dry	Not Coded
1439	0.000	12/22/16	Fri	1415	Sideswipe	0	0	1	Day	Dry	Not Coded
1440	0.000	12/22/16	Fri	1915	Sideswipe	0	0	1	Night	Dry	Not Coded
1441	0.000	12/22/16	Fri	1530	Rear-End	0	1	0	Day	Dry	Not Coded
1442	0.000	12/23/16	Sat	1630	Backed Into	0	0	1	Day	Dry	Not Coded
1443	0.000	12/23/16	Sat	1340	Rear-End	0	0	1	Day	Dry	Not Coded
1444	0.000	12/23/16	Sat	1115	Left-Turn	0	0	1	Day	Wet	Not Coded
1445	0.000	12/23/16	Sat	1223	Angle	0	0	1	Day	Wet	Not Coded
1446	0.000	12/23/16	Sat	1855	Angle	0	1	0	Night	Dry	Not Coded
1447	0.000	12/24/16	Sun	1620	Left-Turn	0	0	1	Day	Dry	Not Coded
1448	0.000	12/24/16	Sun	1303	Rear-End	0	0	1	Day	Dry	Not Coded
1449	0.000	12/24/16	Sun	1740	Angle	0	0	1	Day	Dry	Not Coded

State of Florida Department of Transportation
CRASH SUMMARY

SECTION:	Ludlam Trail Corridor f			STATE ROUTE:	#N/A
ROADWAY LIMITS:	0	M.P.	0.000 TO 0.000	ENGINEER:	0
STUDY PERIOD:	FROM 1/ 2016	TO	12/ 2016	COUNTY:	Miami-Dade

No.	MILE POST	DATE	DAY	TIME	CRASH TYPE	FATAL	INJURIES	PROP DAM	DAY / NIGHT	WET / DRY	CONTRIBUTING CAUSE (VEHICLE ONLY)
1450	0.000	12/24/16	Sun	1740	Angle	0	0	1	Day	Dry	Not Coded
1451	0.000	12/24/16	Sun	1240	Sideswipe	0	0	1	Day	Dry	Not Coded
1452	0.000	12/26/16	Tue	1058	Right-Turn	0	0	1	Day	Dry	Not Coded
1453	0.000	12/27/16	Wed	1850	Sideswipe	0	0	1	Night	Dry	Not Coded
1454	0.000	12/28/16	Thu	1405	Rear-End	0	0	1	Day	Dry	Not Coded
1455	0.000	12/29/16	Fri	1139	Fell/Jumped from Motor Vehicle	0	0	1	Day	Dry	Not Coded
1456	0.000	12/30/16	Sat	0139	Sideswipe	0	0	1	Day	Dry	Not Coded
1457	0.000	12/31/16	Sun	1215	Right-Turn	0	0	1	Day	Dry	Not Coded
1458	0.000	12/31/16	Sun	1440	Angle	0	0	1	Day	Dry	Not Coded

Total No.	Fatal	Injury	PDO	Rear-End	Head-On	Angle	Left-Turn	Right-Turn	Sideswipe	Backed Into	Ped/Bike	Parked Car	Fixed Object	Ran into Water	Other
1458	**3**	**172**	**1283**	**605**	**3**	**266**	**203**	**38**	**190**	**55**	**11**	**34**	**17**	**0**	**36**
Percent	*0.21%*	*11.80%*	*88.00%*	*41.50%*	*0.21%*	*18.24%*	*13.92%*	*2.61%*	*13.03%*	*3.77%*	*0.75%*	*2.33%*	*1.17%*	*0.00%*	*2.47%*

State of Florida Department of Transportation
CRASH SUMMARY

SECTION: Ludlam Trail Corridor f — STATE ROUTE: #N/A
ROADWAY LIMITS: 0 — M.P. 0.000 TO 0.000 — ENGINEER: 0
STUDY PERIOD: FROM 1/ 2017 TO 12/ 2017 — COUNTY: Miami-Dade

No.	MILE POST	DATE	DAY	TIME	CRASH TYPE	FATAL	INJURIES	PROP DAM	DAY / NIGHT	WET / DRY	CONTRIBUTING CAUSE (VEHICLE ONLY)
1	0.000	01/01/17	Mon	1510	Left-Turn	0	0	1	Day	Dry	Not Coded
2	0.000	01/02/17	Tue	1912	Right-Turn	0	0	1	Night	Dry	Not Coded
3	0.000	01/02/17	Tue	1709	Rear-End	0	0	1	Day	Dry	Not Coded
4	0.000	01/02/17	Tue	2036	Right-Turn	0	0	1	Night	Dry	Not Coded
5	0.000	01/02/17	Tue	1730	Sideswipe	0	0	1	Day	Dry	Not Coded
6	0.000	01/03/17	Wed	1051	Rear-End	0	0	1	Day	Dry	Not Coded
7	0.000	01/03/17	Wed	1245	Rear-End	0	0	1	Day	Dry	Not Coded
8	0.000	01/04/17	Thu	1840	Rear-End	0	0	1	Day	Dry	Not Coded
9	0.000	01/04/17	Thu	1521	Angle	0	0	1	Day	Dry	Not Coded
10	0.000	01/04/17	Thu	1005	Rear-End	0	0	1	Day	Dry	Not Coded
11	0.000	01/04/17	Thu	0800	Rear-End	0	0	1	Day	Dry	Not Coded
12	0.000	01/05/17	Fri	1715	Rear-End	0	0	1	Day	Dry	Not Coded
13	0.000	01/05/17	Fri	1330	Rear-End	0	0	1	Day	Dry	Not Coded
14	0.000	01/05/17	Fri	2014	Angle	0	0	1	Night	Dry	Not Coded
15	0.000	01/06/17	Sat	2050	Sideswipe	0	0	1	Night	Dry	Not Coded
16	0.000	01/06/17	Sat	1613	Left-Turn	0	0	1	Day	Dry	Not Coded
17	0.000	01/06/17	Sat	1842	Rear-End	0	0	1	Night	Dry	Not Coded
18	0.000	01/07/17	Sun	1450	Rear-End	0	0	1	Day	Wet	Not Coded
19	0.000	01/08/17	Mon	1356	Sideswipe	0	1	0	Day	Dry	Not Coded
20	0.000	01/08/17	Mon	1350	Rear-End	0	0	1	Day	Dry	Not Coded
21	0.000	01/08/17	Mon	1305	Fence	0	0	1	Day	Dry	Not Coded
22	0.000	01/09/17	Tue	1944	Angle	0	0	1	Day	Dry	Not Coded
23	0.000	01/09/17	Tue	1944	Left-Turn	0	0	1	Night	Dry	Not Coded
24	0.000	01/09/17	Tue	0859	Angle	0	0	1	Day	Dry	Not Coded
25	0.000	01/10/17	Wed	1800	Rear-End	0	0	1	Day	Dry	Not Coded
26	0.000	01/10/17	Wed	1033	Sideswipe	0	0	1	Day	Dry	Not Coded
27	0.000	01/10/17	Wed	1720	Rear-End	0	0	1	Day	Dry	Not Coded
28	0.000	01/10/17	Wed	1630	Parked Motor Vehicle	0	0	1	Day	Dry	Not Coded
29	0.000	01/10/17	Wed	1918	Angle	0	0	1	Night	Dry	Not Coded
30	0.000	01/11/17	Thu	1240	Rear-End	0	0	1	Day	Dry	Not Coded
31	0.000	01/11/17	Thu	1850	Angle	0	0	1	Night	Wet	Not Coded
32	0.000	01/11/17	Thu	1518	Sideswipe	0	0	1	Day	Dry	Not Coded
33	0.000	01/11/17	Thu	2040	Rear-End	0	0	1	Night	Wet	Not Coded
34	0.000	01/11/17	Thu	1629	Rear-End	0	0	1	Day	Dry	Not Coded
35	0.000	01/11/17	Thu	1952	Rear-End	0	0	1	Night	Dry	Not Coded
36	0.000	01/11/17	Thu	0823	Rear-End	0	0	1	Day	Dry	Not Coded
37	0.000	01/12/17	Fri	1304	Rear-End	0	1	0	Day	Dry	Not Coded
38	0.000	01/12/17	Fri	0800	Left-Turn	0	0	1	Day	Dry	Not Coded
39	0.000	01/12/17	Fri	1738	Angle	0	0	1	Day	Dry	Not Coded
40	0.000	01/12/17	Fri	1730	Sideswipe	0	0	1	Night	Dry	Not Coded
41	0.000	01/12/17	Fri	1223	Left-Turn	0	0	1	Day	Dry	Not Coded
42	0.000	01/13/17	Sat	2350	Rear-End	0	1	0	Night	Wet	Not Coded
43	0.000	01/13/17	Sat	1527	Rear-End	0	0	1	Day	Dry	Not Coded
44	0.000	01/13/17	Sat	1915	Sideswipe	0	0	1	Night	Dry	Not Coded
45	0.000	01/13/17	Sat	1843	Parked Motor Vehicle	0	0	1	Night	Dry	Not Coded
46	0.000	01/13/17	Sat	1030	Rear-End	0	0	1	Day	Dry	Not Coded
47	0.000	01/13/17	Sat	1454	Angle	0	0	1	Day	Dry	Not Coded
48	0.000	01/13/17	Sat	1924	Rear-End	0	0	1	Night	Dry	Not Coded
49	0.000	01/13/17	Sat	1520	Parked Motor Vehicle	0	0	1	Day	Dry	Not Coded
50	0.000	01/13/17	Sat	1201	Rear-End	0	0	1	Day	Dry	Not Coded
51	0.000	01/14/17	Sun	1355	Angle	0	0	1	Day	Dry	Not Coded
52	0.000	01/14/17	Sun	1810	Pedalcycle	0	0	1	Day	Dry	Not Coded
53	0.000	01/14/17	Sun	1207	Left-Turn	0	0	1	Day	Dry	Not Coded
54	0.000	01/14/17	Sun	1230	Left-Turn	0	0	1	Day	Dry	Not Coded
55	0.000	01/15/17	Mon	1555	Left-Turn	0	0	1	Day	Dry	Not Coded
56	0.000	01/16/17	Tue	1210	Rear-End	0	0	1	Day	Dry	Not Coded
57	0.000	01/16/17	Tue	1653	Sideswipe	0	1	0	Day	Dry	Not Coded
58	0.000	01/16/17	Tue	1328	Rear-End	0	1	0	Day	Dry	Not Coded
59	0.000	01/16/17	Tue	1249	Rear-End	0	0	1	Day	Dry	Not Coded
60	0.000	01/16/17	Tue	1000	Rear-End	0	0	1	Day	Dry	Not Coded
61	0.000	01/16/17	Tue	1229	Sideswipe	0	0	1	Day	Dry	Not Coded
62	0.000	01/17/17	Wed	0652	Rear-End	0	1	0	Night	Dry	Not Coded
63	0.000	01/17/17	Wed	1558	Rear-End	0	0	1	Day	Dry	Not Coded
64	0.000	01/18/17	Thu	1833	Angle	0	0	1	Night	Dry	Not Coded
65	0.000	01/18/17	Thu	1719	Rear-End	0	0	1	Day	Dry	Not Coded
66	0.000	01/18/17	Thu	0910	Parked Motor Vehicle	0	0	1	Day	Dry	Not Coded
67	0.000	01/18/17	Thu	1814	Not Coded	0	0	1	Night	Dry	Not Coded
68	0.000	01/18/17	Thu	1216	Angle	0	0	1	Day	Dry	Not Coded
69	0.000	01/18/17	Thu	0953	Rear-End	0	0	1	Day	Dry	Not Coded

State of Florida Department of Transportation
CRASH SUMMARY

SECTION: Ludlam Trail Corridor f — STATE ROUTE: #N/A
ROADWAY LIMITS: 0 — M.P. 0.000 TO 0.000 — ENGINEER: 0
STUDY PERIOD: FROM 1/ 2017 TO 12/ 2017 — COUNTY: Miami-Dade

No.	MILE POST	DATE	DAY	TIME	CRASH TYPE	FATAL	INJURIES	PROP DAM	DAY / NIGHT	WET / DRY	CONTRIBUTING CAUSE (VEHICLE ONLY)
70	0.000	01/18/17	Thu	0646	Angle	0	0	1	Day	Dry	Not Coded
71	0.000	01/18/17	Thu	1900	Angle	0	0	1	Night	Dry	Not Coded
72	0.000	01/19/17	Fri	2010	Not Coded	0	0	1	Unknown	Dry	Not Coded
73	0.000	01/19/17	Fri	1650	Angle	0	1	0	Day	Dry	Not Coded
74	0.000	01/19/17	Fri	0430	Rear-End	0	1	0	Night	Dry	Not Coded
75	0.000	01/19/17	Fri	0826	Rear-End	0	0	1	Day	Dry	Not Coded
76	0.000	01/19/17	Fri	1423	Rear-End	0	0	1	Day	Dry	Not Coded
77	0.000	01/19/17	Fri	1708	Rear-End	0	0	1	Day	Dry	Not Coded
78	0.000	01/20/17	Sat	1930	Sideswipe	0	0	1	Night	Dry	Not Coded
79	0.000	01/20/17	Sat	1033	Angle	0	0	1	Day	Dry	Not Coded
80	0.000	01/21/17	Sun	1651	Left-Turn	0	1	0	Day	Dry	Not Coded
81	0.000	01/22/17	Mon	1655	Rear-End	0	0	1	Day	Dry	Not Coded
82	0.000	01/22/17	Mon	1126	Angle	0	1	0	Day	Dry	Not Coded
83	0.000	01/22/17	Mon	1644	Angle	0	0	1	Day	Dry	Not Coded
84	0.000	01/22/17	Mon	1600	Rear-End	0	1	0	Day	Dry	Not Coded
85	0.000	01/23/17	Tue	1942	Sideswipe	0	1	0	Night	Dry	Not Coded
86	0.000	01/23/17	Tue	1734	Rear-End	0	0	1	Day	Dry	Not Coded
87	0.000	01/23/17	Tue	1418	Other Fixed Object	0	0	1	Day	Dry	Not Coded
88	0.000	01/23/17	Tue	1851	Left-Turn	0	0	1	Night	Dry	Not Coded
89	0.000	01/24/17	Wed	1200	Rear-End	0	0	1	Day	Dry	Not Coded
90	0.000	01/24/17	Wed	1725	Left-Turn	0	0	1	Day	Dry	Not Coded
91	0.000	01/24/17	Wed	1432	Rear-End	0	0	1	Day	Dry	Not Coded
92	0.000	01/24/17	Wed	1919	Angle	0	0	1	Night	Dry	Not Coded
93	0.000	01/24/17	Wed	0838	Angle	0	0	1	Day	Dry	Not Coded
94	0.000	01/24/17	Wed	1522	Not Coded	0	1	0	Day	Dry	Not Coded
95	0.000	01/25/17	Thu	1345	Left-Turn	0	0	1	Day	Dry	Not Coded
96	0.000	01/25/17	Thu	1505	Rear-End	0	0	1	Day	Dry	Not Coded
97	0.000	01/25/17	Thu	1128	Right-Turn	0	1	0	Day	Dry	Not Coded
98	0.000	01/25/17	Thu	1015	Rear-End	0	0	1	Day	Dry	Not Coded
99	0.000	01/25/17	Thu	1710	Right-Turn	0	0	1	Day	Dry	Not Coded
100	0.000	01/25/17	Thu	0845	Backed Into	0	0	1	Day	Dry	Not Coded
101	0.000	01/26/17	Fri	1325	Sideswipe	0	0	1	Day	Dry	Not Coded
102	0.000	01/26/17	Fri	0640	Sideswipe	0	0	1	Night	Dry	Not Coded
103	0.000	01/26/17	Fri	1818	Angle	0	0	1	Night	Dry	Not Coded
104	0.000	01/26/17	Fri	1909	Backed Into	0	0	1	Night	Dry	Not Coded
105	0.000	01/26/17	Fri	1802	Parked Motor Vehicle	0	0	1	Night	Dry	Not Coded
106	0.000	01/26/17	Fri	1818	Backed Into	0	0	1	Night	Dry	Not Coded
107	0.000	01/27/17	Sat	1040	Rear-End	0	0	1	Day	Dry	Not Coded
108	0.000	01/29/17	Mon	1510	Rear-End	0	0	1	Day	Wet	Not Coded
109	0.000	01/29/17	Mon	1108	Angle	0	0	1	Day	Wet	Not Coded
110	0.000	01/30/17	Tue	1420	Rear-End	0	1	0	Day	Dry	Not Coded
111	0.000	01/30/17	Tue	1122	Rear-End	0	0	1	Day	Dry	Not Coded
112	0.000	01/30/17	Tue	0645	Angle	0	0	1	Day	Dry	Not Coded
113	0.000	01/30/17	Tue	0938	Parked Motor Vehicle	0	0	1	Day	Dry	Not Coded
114	0.000	01/30/17	Tue	1811	Rear-End	0	0	1	Night	Dry	Not Coded
115	0.000	01/30/17	Tue	1211	Rear-End	0	0	1	Day	Dry	Not Coded
116	0.000	01/30/17	Tue	1703	Rear-End	0	0	1	Day	Dry	Not Coded
117	0.000	01/31/17	Wed	2119	Rear-End	0	0	1	Night	Dry	Not Coded
118	0.000	01/31/17	Wed	1543	Rear-End	0	0	1	Day	Dry	Not Coded
119	0.000	01/31/17	Wed	1240	Left-Turn	0	0	1	Day	Dry	Not Coded
120	0.000	01/31/17	Wed	1451	Mailbox	0	0	1	Day	Dry	Not Coded
121	0.000	01/31/17	Wed	2033	Rear-End	0	0	1	Night	Dry	Not Coded
122	0.000	01/31/17	Wed	0957	Head-On	0	1	0	Day	Dry	Not Coded
123	0.000	01/31/17	Wed	1328	Pedestrian	0	0	1	Day	Dry	Not Coded
124	0.000	01/31/17	Wed	0930	Pedalcycle	0	0	1	Day	Dry	Not Coded
125	0.000	02/01/17	Thu	1117	Angle	0	0	1	Day	Dry	Not Coded
126	0.000	02/01/17	Thu	1920	Sideswipe	0	0	1	Night	Dry	Not Coded
127	0.000	02/01/17	Thu	1640	Pedestrian	0	1	0	Night	Dry	Not Coded
128	0.000	02/01/17	Thu	0812	Angle	0	1	0	Day	Dry	Not Coded
129	0.000	02/02/17	Fri	1748	Rear-End	0	0	1	Night	Dry	Not Coded
130	0.000	02/02/17	Fri	1934	Left-Turn	0	0	1	Night	Dry	Not Coded
131	0.000	02/02/17	Fri	0806	Sideswipe	0	0	1	Day	Dry	Not Coded
132	0.000	02/02/17	Fri	1446	Sideswipe	0	0	1	Day	Dry	Not Coded
133	0.000	02/02/17	Fri	1726	Rear-End	0	0	1	Day	Dry	Not Coded
134	0.000	02/02/17	Fri	2135	Sideswipe	0	0	1	Night	Dry	Not Coded
135	0.000	02/02/17	Fri	1905	Rear-End	0	0	1	Night	Dry	Not Coded
136	0.000	02/02/17	Fri	1335	Angle	0	0	1	Day	Dry	Not Coded
137	0.000	02/02/17	Fri	1441	Not Coded	0	0	1	Day	Dry	Not Coded
138	0.000	02/02/17	Fri	1206	Sideswipe	0	0	1	Day	Dry	Not Coded

State of Florida Department of Transportation
CRASH SUMMARY

SECTION: Ludlam Trail Corridor f — STATE ROUTE: #N/A
ROADWAY LIMITS: 0 — M.P. 0.000 TO 0.000 — ENGINEER: 0
STUDY PERIOD: FROM 1/ 2017 TO 12/ 2017 — COUNTY: Miami-Dade

No.	MILE POST	DATE	DAY	TIME	CRASH TYPE	FATAL	INJURIES	PROP DAM	DAY / NIGHT	WET / DRY	CONTRIBUTING CAUSE (VEHICLE ONLY)
139	0.000	02/03/17	Sat	1620	Angle	0	0	1	Day	Dry	Not Coded
140	0.000	02/03/17	Sat	1240	Rear-End	0	0	1	Day	Dry	Not Coded
141	0.000	02/03/17	Sat	1305	Angle	0	0	1	Day	Dry	Not Coded
142	0.000	02/03/17	Sat	2330	Rear-End	0	1	0	Night	Dry	Not Coded
143	0.000	02/03/17	Sat	1510	Left-Turn	0	0	1	Day	Dry	Not Coded
144	0.000	02/03/17	Sat	1018	Left-Turn	0	0	1	Day	Dry	Not Coded
145	0.000	02/03/17	Sat	0642	Rear-End	0	0	1	Day	Dry	Not Coded
146	0.000	02/04/17	Sun	2330	Rear-End	0	0	1	Night	Dry	Not Coded
147	0.000	02/04/17	Sun	2019	Angle	0	0	1	Night	Dry	Not Coded
148	0.000	02/04/17	Sun	0645	Rear-End	0	1	0	Day	Dry	Not Coded
149	0.000	02/05/17	Mon	0450	Rear-End	0	1	0	Night	Dry	Not Coded
150	0.000	02/05/17	Mon	1335	Sideswipe	0	1	0	Day	Dry	Not Coded
151	0.000	02/05/17	Mon	1600	Rear-End	0	0	1	Day	Dry	Not Coded
152	0.000	02/06/17	Tue	1040	Tree (Standing)	0	0	1	Day	Dry	Not Coded
153	0.000	02/06/17	Tue	1400	Rear-End	0	0	1	Day	Dry	Not Coded
154	0.000	02/06/17	Tue	1743	Rear-End	0	1	0	Day	Dry	Not Coded
155	0.000	02/06/17	Tue	0630	Angle	0	0	1	Night	Dry	Not Coded
156	0.000	02/06/17	Tue	1429	Left-Turn	0	0	1	Day	Dry	Not Coded
157	0.000	02/06/17	Tue	1339	Angle	0	0	1	Day	Dry	Not Coded
158	0.000	02/07/17	Wed	0710	Rear-End	0	1	0	Day	Dry	Not Coded
159	0.000	02/07/17	Wed	0800	Rear-End	0	0	1	Day	Dry	Not Coded
160	0.000	02/07/17	Wed	1348	Rear-End	0	0	1	Day	Dry	Not Coded
161	0.000	02/07/17	Wed	1140	Sideswipe	0	0	1	Day	Dry	Not Coded
162	0.000	02/08/17	Thu	0701	Rear-End	0	0	1	Day	Dry	Not Coded
163	0.000	02/08/17	Thu	0915	Angle	0	0	1	Day	Dry	Not Coded
164	0.000	02/08/17	Thu	1721	Sideswipe	0	0	1	Day	Dry	Not Coded
165	0.000	02/08/17	Thu	1740	Backed Into	0	0	1	Day	Dry	Not Coded
166	0.000	02/08/17	Thu	1214	Left-Turn	0	0	1	Day	Dry	Not Coded
167	0.000	02/08/17	Thu	0736	Sideswipe	0	0	1	Day	Dry	Not Coded
168	0.000	02/09/17	Fri	2332	Sideswipe	0	0	1	Night	Dry	Not Coded
169	0.000	02/09/17	Fri	1650	Angle	0	0	1	Day	Dry	Not Coded
170	0.000	02/09/17	Fri	1342	Rear-End	0	1	0	Day	Dry	Not Coded
171	0.000	02/09/17	Fri	0810	Right-Turn	0	0	1	Day	Dry	Not Coded
172	0.000	02/09/17	Fri	1915	Angle	0	0	1	Day	Dry	Not Coded
173	0.000	02/09/17	Fri	1130	Angle	0	0	1	Day	Dry	Not Coded
174	0.000	02/09/17	Fri	1520	Rear-End	0	0	1	Day	Dry	Not Coded
175	0.000	02/10/17	Sat	0529	Not Coded	0	0	1	Night	Dry	Not Coded
176	0.000	02/10/17	Sat	0044	Sideswipe	0	0	1	Night	Dry	Not Coded
177	0.000	02/10/17	Sat	1000	Rear-End	0	0	1	Day	Dry	Not Coded
178	0.000	02/10/17	Sat	0635	Rear-End	0	0	1	Day	Dry	Not Coded
179	0.000	02/10/17	Sat	1645	Angle	0	0	1	Day	Dry	Not Coded
180	0.000	02/10/17	Sat	1509	Rear-End	0	0	1	Day	Dry	Not Coded
181	0.000	02/11/17	Sun	1530	Rear-End	0	0	1	Day	Dry	Not Coded
182	0.000	02/11/17	Sun	1300	Left-Turn	0	0	1	Day	Dry	Not Coded
183	0.000	02/11/17	Sun	0026	Backed Into	0	1	0	Day	Dry	Not Coded
184	0.000	02/11/17	Sun	0421	Sideswipe	0	1	0	Night	Dry	Not Coded
185	0.000	02/13/17	Tue	1225	Left-Turn	0	0	1	Day	Dry	Not Coded
186	0.000	02/13/17	Tue	1100	Rear-End	0	0	1	Day	Dry	Not Coded
187	0.000	02/13/17	Tue	1946	Left-Turn	0	0	1	Night	Dry	Not Coded
188	0.000	02/13/17	Tue	1940	Left-Turn	0	0	1	Night	Dry	Not Coded
189	0.000	02/13/17	Tue	1025	Rear-End	0	0	1	Day	Dry	Not Coded
190	0.000	02/14/17	Wed	0608	Parked Motor Vehicle	0	0	1	Night	Dry	Not Coded
191	0.000	02/14/17	Wed	1224	Right-Turn	0	0	1	Day	Dry	Not Coded
192	0.000	02/14/17	Wed	1540	Rear-End	0	0	1	Day	Dry	Not Coded
193	0.000	02/14/17	Wed	1715	Rear-End	0	0	1	Day	Dry	Not Coded
194	0.000	02/14/17	Wed	1829	Angle	0	0	1	Night	Dry	Not Coded
195	0.000	02/14/17	Wed	1400	Angle	0	0	1	Day	Dry	Not Coded
196	0.000	02/14/17	Wed	1139	Rear-End	0	0	1	Day	Dry	Not Coded
197	0.000	02/14/17	Wed	1735	Sideswipe	0	0	1	Day	Dry	Not Coded
198	0.000	02/15/17	Thu	0912	Sideswipe	0	0	1	Day	Dry	Not Coded
199	0.000	02/15/17	Thu	1604	Left-Turn	0	0	1	Day	Dry	Not Coded
200	0.000	02/15/17	Thu	0800	Sideswipe	0	0	1	Day	Dry	Not Coded
201	0.000	02/15/17	Thu	1623	Left-Turn	0	0	1	Day	Dry	Not Coded
202	0.000	02/15/17	Thu	0730	Rear-End	0	0	1	Day	Dry	Not Coded
203	0.000	02/15/17	Thu	1315	Rear-End	0	0	1	Day	Dry	Not Coded
204	0.000	02/15/17	Thu	1740	Left-Turn	0	0	1	Day	Dry	Not Coded
205	0.000	02/16/17	Fri	1750	Angle	0	0	1	Night	Dry	Not Coded
206	0.000	02/16/17	Fri	1637	Rear-End	0	0	1	Day	Dry	Not Coded
207	0.000	02/16/17	Fri	1841	Rear-End	0	0	1	Night	Dry	Not Coded

State of Florida Department of Transportation
CRASH SUMMARY

SECTION: Ludlam Trail Corridor f — STATE ROUTE: #N/A
ROADWAY LIMITS: 0 — M.P. 0.000 TO 0.000 — ENGINEER: 0
STUDY PERIOD: FROM 1/ 2017 TO 12/ 2017 — COUNTY: Miami-Dade

No.	MILE POST	DATE	DAY	TIME	CRASH TYPE	FATAL	INJURIES	PROP DAM	DAY / NIGHT	WET / DRY	CONTRIBUTING CAUSE (VEHICLE ONLY)
208	0.000	02/16/17	Fri	1344	Left-Turn	0	0	1	Day	Dry	Not Coded
209	0.000	02/16/17	Fri	1400	Rear-End	0	0	1	Day	Dry	Not Coded
210	0.000	02/17/17	Sat	1643	Sideswipe	0	0	1	Day	Dry	Not Coded
211	0.000	02/17/17	Sat	1448	Head-On	0	1	0	Day	Dry	Not Coded
212	0.000	02/17/17	Sat	1453	Backed Into	0	0	1	Day	Dry	Not Coded
213	0.000	02/17/17	Sat	1425	Rear-End	0	0	1	Day	Dry	Not Coded
214	0.000	02/17/17	Sat	0725	Parked Motor Vehicle	0	0	1	Day	Dry	Not Coded
215	0.000	02/18/17	Sun	1830	Rear-End	0	0	1	Night	Dry	Not Coded
216	0.000	02/19/17	Mon	1939	Backed Into	0	0	1	Night	Dry	Not Coded
217	0.000	02/20/17	Tue	1206	Angle	0	0	1	Day	Dry	Not Coded
218	0.000	02/20/17	Tue	1435	Left-Turn	0	1	0	Day	Dry	Not Coded
219	0.000	02/20/17	Tue	1548	Right-Turn	0	0	1	Day	Dry	Not Coded
220	0.000	02/20/17	Tue	1821	Rear-End	0	0	1	Day	Dry	Not Coded
221	0.000	02/21/17	Wed	1720	Rear-End	0	0	1	Day	Dry	Not Coded
222	0.000	02/21/17	Wed	1521	Rear-End	0	0	1	Day	Dry	Not Coded
223	0.000	02/21/17	Wed	1950	Sideswipe	0	0	1	Night	Dry	Not Coded
224	0.000	02/21/17	Wed	1445	Rear-End	0	1	0	Day	Dry	Not Coded
225	0.000	02/22/17	Thu	1020	Sideswipe	0	0	1	Day	Dry	Not Coded
226	0.000	02/22/17	Thu	1710	Rear-End	0	0	1	Night	Dry	Not Coded
227	0.000	02/22/17	Thu	1234	Parked Motor Vehicle	0	0	1	Day	Wet	Not Coded
228	0.000	02/22/17	Thu	1238	Rear-End	0	0	1	Day	Wet	Not Coded
229	0.000	02/22/17	Thu	1800	Angle	0	0	1	Day	Wet	Not Coded
230	0.000	02/22/17	Thu	1350	Right-Turn	0	0	1	Day	Wet	Not Coded
231	0.000	02/22/17	Thu	1355	Angle	0	1	0	Day	Wet	Not Coded
232	0.000	02/22/17	Thu	0920	Rear-End	0	0	1	Day	Dry	Not Coded
233	0.000	02/22/17	Thu	1223	Left-Turn	0	0	1	Day	Dry	Not Coded
234	0.000	02/22/17	Thu	1520	Parked Motor Vehicle	0	0	1	Day	Wet	Not Coded
235	0.000	02/22/17	Thu	1213	Rear-End	0	0	1	Day	Wet	Not Coded
236	0.000	02/23/17	Fri	1535	Right-Turn	0	1	0	Day	Dry	Not Coded
237	0.000	02/23/17	Fri	0730	Rear-End	0	0	1	Day	Dry	Not Coded
238	0.000	02/23/17	Fri	1802	Left-Turn	0	0	1	Day	Dry	Not Coded
239	0.000	02/23/17	Fri	0020	Overturn/Rollover	0	0	1	Night	Wet	Not Coded
240	0.000	02/23/17	Fri	0813	Rear-End	0	0	1	Day	Dry	Not Coded
241	0.000	02/23/17	Fri	1415	Rear-End	0	0	1	Day	Dry	Not Coded
242	0.000	02/23/17	Fri	1320	Right-Turn	0	0	1	Day	Dry	Not Coded
243	0.000	02/24/17	Sat	0848	Rear-End	0	0	1	Day	Dry	Not Coded
244	0.000	02/24/17	Sat	1153	Left-Turn	0	0	1	Day	Dry	Not Coded
245	0.000	02/24/17	Sat	1546	Parked Motor Vehicle	0	0	1	Day	Dry	Not Coded
246	0.000	02/24/17	Sat	1513	Rear-End	0	0	1	Day	Dry	Not Coded
247	0.000	02/24/17	Sat	0423	Rear-End	0	1	0	Night	Dry	Not Coded
248	0.000	02/25/17	Sun	0550	Sideswipe	0	0	1	Day	Dry	Not Coded
249	0.000	02/25/17	Sun	1340	Angle	0	1	0	Day	Dry	Not Coded
250	0.000	02/25/17	Sun	1044	Sideswipe	0	1	0	Day	Dry	Not Coded
251	0.000	02/25/17	Sun	1123	Rear-End	0	1	0	Day	Dry	Not Coded
252	0.000	02/25/17	Sun	1100	Rear-End	0	0	1	Day	Dry	Not Coded
253	0.000	02/25/17	Sun	1014	Angle	0	0	1	Day	Dry	Not Coded
254	0.000	02/25/17	Sun	0130	Rear-End	0	1	0	Night	Dry	Not Coded
255	0.000	02/25/17	Sun	0932	Rear-End	0	0	1	Day	Dry	Not Coded
256	0.000	02/26/17	Mon	1248	Angle	0	1	0	Day	Dry	Not Coded
257	0.000	02/26/17	Mon	1246	Angle	0	0	1	Day	Dry	Not Coded
258	0.000	02/27/17	Tue	1120	Right-Turn	0	0	1	Day	Dry	Not Coded
259	0.000	02/27/17	Tue	1340	Sideswipe	0	0	1	Day	Dry	Not Coded
260	0.000	02/27/17	Tue	0820	Angle	0	1	0	Day	Dry	Not Coded
261	0.000	02/27/17	Tue	1500	Rear-End	0	0	1	Day	Dry	Not Coded
262	0.000	02/27/17	Tue	1534	Sideswipe	0	1	0	Day	Dry	Not Coded
263	0.000	02/27/17	Tue	1723	Rear-End	0	0	1	Day	Dry	Not Coded
264	0.000	02/28/17	Wed	0815	Parked Motor Vehicle	0	0	1	Day	Dry	Not Coded
265	0.000	02/28/17	Wed	1615	Angle	0	1	0	Day	Dry	Not Coded
266	0.000	02/28/17	Wed	1003	Head-On	0	0	1	Day	Dry	Not Coded
267	0.000	02/28/17	Wed	1928	Tree (Standing)	0	1	0	Night	Dry	Not Coded
268	0.000	02/28/17	Wed	1743	Sideswipe	0	0	1	Night	Dry	Not Coded
269	0.000	02/28/17	Wed	2000	Right-Turn	0	0	1	Night	Dry	Not Coded
270	0.000	03/01/17	Thu	1743	Rear-End	0	1	0	Day	Dry	Not Coded
271	0.000	03/01/17	Thu	2100	Angle	0	0	1	Night	Dry	Not Coded
272	0.000	03/01/17	Thu	1751	Backed Into	0	0	1	Day	Dry	Not Coded
273	0.000	03/01/17	Thu	1625	Rear-End	0	0	1	Day	Dry	Not Coded
274	0.000	03/01/17	Thu	1222	Angle	0	0	1	Day	Dry	Not Coded
275	0.000	03/01/17	Thu	0745	Pedalcycle	0	0	1	Day	Dry	Not Coded
276	0.000	03/01/17	Thu	1750	Right-Turn	0	0	1	Day	Dry	Not Coded

State of Florida Department of Transportation
CRASH SUMMARY

SECTION: Ludlam Trail Corridor f — STATE ROUTE: #N/A
ROADWAY LIMITS: 0 — M.P. 0.000 TO 0.000 — ENGINEER: 0
STUDY PERIOD: FROM 1/ 2017 TO 12/ 2017 — COUNTY: Miami-Dade

No.	MILE POST	DATE	DAY	TIME	CRASH TYPE	FATAL	INJURIES	PROP DAM	DAY / NIGHT	WET / DRY	CONTRIBUTING CAUSE (VEHICLE ONLY)
277	0.000	03/02/17	Fri	1247	Rear-End	0	0	1	Day	Dry	Not Coded
278	0.000	03/02/17	Fri	0750	Sideswipe	0	0	1	Day	Dry	Not Coded
279	0.000	03/02/17	Fri	0800	Rear-End	0	0	1	Day	Dry	Not Coded
280	0.000	03/02/17	Fri	0037	Not Coded	0	0	1	Night	Dry	Not Coded
281	0.000	03/02/17	Fri	0815	Angle	0	0	1	Day	Dry	Not Coded
282	0.000	03/02/17	Fri	1430	Angle	0	0	1	Day	Dry	Not Coded
283	0.000	03/02/17	Fri	1801	Backed Into	0	0	1	Day	Wet	Not Coded
284	0.000	03/02/17	Fri	0842	Angle	0	0	1	Day	Dry	Not Coded
285	0.000	03/02/17	Fri	1720	Rear-End	0	0	1	Day	Wet	Not Coded
286	0.000	03/02/17	Fri	1732	Angle	0	0	1	Day	Wet	Not Coded
287	0.000	03/02/17	Fri	0829	Rear-End	0	0	1	Day	Dry	Not Coded
288	0.000	03/02/17	Fri	1807	Right-Turn	0	0	1	Night	Dry	Not Coded
289	0.000	03/02/17	Fri	0945	Overturn/Rollover	0	1	0	Day	Dry	Not Coded
290	0.000	03/02/17	Fri	0906	Backed Into	0	1	0	Day	Dry	Not Coded
291	0.000	03/02/17	Fri	1040	Backed Into	0	0	1	Day	Dry	Not Coded
292	0.000	03/02/17	Fri	2015	Left-Turn	0	0	1	Night	Dry	Not Coded
293	0.000	03/02/17	Fri	1104	Rear-End	0	0	1	Day	Dry	Not Coded
294	0.000	03/03/17	Sat	1845	Right-Turn	0	0	1	Night	Dry	Not Coded
295	0.000	03/03/17	Sat	1514	Rear-End	0	0	1	Day	Dry	Not Coded
296	0.000	03/03/17	Sat	1638	Angle	0	0	1	Day	Dry	Not Coded
297	0.000	03/03/17	Sat	0830	Angle	0	0	1	Day	Dry	Not Coded
298	0.000	03/03/17	Sat	0752	Rear-End	0	0	1	Day	Dry	Not Coded
299	0.000	03/03/17	Sat	1147	Backed Into	0	0	1	Day	Dry	Not Coded
300	0.000	03/04/17	Sun	1114	Sideswipe	0	0	1	Day	Dry	Not Coded
301	0.000	03/04/17	Sun	1856	Left-Turn	0	0	1	Night	Dry	Not Coded
302	0.000	03/04/17	Sun	1255	Sideswipe	0	1	0	Day	Dry	Not Coded
303	0.000	03/04/17	Sun	1455	Rear-End	0	0	1	Day	Dry	Not Coded
304	0.000	03/04/17	Sun	1130	Left-Turn	0	0	1	Day	Dry	Not Coded
305	0.000	03/04/17	Sun	0411	Angle	0	0	1	Night	Dry	Not Coded
306	0.000	03/05/17	Mon	1421	Left-Turn	0	0	1	Day	Dry	Not Coded
307	0.000	03/05/17	Mon	1655	Rear-End	0	0	1	Day	Dry	Not Coded
308	0.000	03/05/17	Mon	1120	Not Coded	0	0	1	Day	Dry	Not Coded
309	0.000	03/05/17	Mon	1316	Angle	0	1	0	Day	Dry	Not Coded
310	0.000	03/06/17	Tue	2035	Left-Turn	0	0	1	Day	Dry	Not Coded
311	0.000	03/06/17	Tue	1500	Left-Turn	0	0	1	Day	Dry	Not Coded
312	0.000	03/06/17	Tue	0855	Angle	0	1	0	Day	Dry	Not Coded
313	0.000	03/06/17	Tue	1429	Not Coded	0	0	1	Day	Dry	Not Coded
314	0.000	03/06/17	Tue	2120	Sideswipe	0	1	0	Night	Wet	Not Coded
315	0.000	03/06/17	Tue	1425	Rear-End	0	0	1	Day	Dry	Not Coded
316	0.000	03/06/17	Tue	2305	Sideswipe	0	0	1	Night	Dry	Not Coded
317	0.000	03/06/17	Tue	2221	Right-Turn	0	1	0	Night	Dry	Not Coded
318	0.000	03/06/17	Tue	1554	Left-Turn	0	0	1	Day	Dry	Not Coded
319	0.000	03/06/17	Tue	0630	Pedestrian	0	1	0	Day	Dry	Not Coded
320	0.000	03/06/17	Tue	1751	Angle	0	0	1	Day	Dry	Not Coded
321	0.000	03/07/17	Wed	1405	Rear-End	0	0	1	Day	Dry	Not Coded
322	0.000	03/07/17	Wed	1730	Rear-End	0	0	1	Day	Dry	Not Coded
323	0.000	03/07/17	Wed	0835	Rear-End	0	0	1	Day	Dry	Not Coded
324	0.000	03/07/17	Wed	1908	Angle	0	1	0	Night	Dry	Not Coded
325	0.000	03/07/17	Wed	1730	Rear-End	0	1	0	Day	Dry	Not Coded
326	0.000	03/07/17	Wed	1800	Sideswipe	0	0	1	Day	Dry	Not Coded
327	0.000	03/08/17	Thu	1755	Sideswipe	0	0	1	Night	Dry	Not Coded
328	0.000	03/08/17	Thu	0925	Rear-End	0	0	1	Day	Dry	Not Coded
329	0.000	03/08/17	Thu	0808	Angle	0	0	1	Day	Dry	Not Coded
330	0.000	03/08/17	Thu	1812	Left-Turn	0	0	1	Day	Dry	Not Coded
331	0.000	03/09/17	Fri	0744	Angle	0	0	1	Day	Dry	Not Coded
332	0.000	03/09/17	Fri	0835	Left-Turn	0	0	1	Day	Dry	Not Coded
333	0.000	03/09/17	Fri	0800	Rear-End	0	0	1	Day	Dry	Not Coded
334	0.000	03/10/17	Sat	1640	Angle	0	0	1	Day	Dry	Not Coded
335	0.000	03/10/17	Sat	1325	Sideswipe	0	0	1	Day	Dry	Not Coded
336	0.000	03/10/17	Sat	1640	Rear-End	0	0	1	Day	Dry	Not Coded
337	0.000	03/10/17	Sat	0625	Rear-End	0	1	0	Night	Dry	Not Coded
338	0.000	03/10/17	Sat	0755	Backed Into	0	0	1	Day	Dry	Not Coded
339	0.000	03/10/17	Sat	1722	Head-On	0	0	1	Day	Dry	Not Coded
340	0.000	03/10/17	Sat	1518	Angle	0	0	1	Day	Dry	Not Coded
341	0.000	03/10/17	Sat	1537	Rear-End	0	0	1	Day	Dry	Not Coded
342	0.000	03/11/17	Sun	1050	Rear-End	0	0	1	Day	Dry	Not Coded
343	0.000	03/11/17	Sun	1238	Rear-End	0	0	1	Day	Dry	Not Coded
344	0.000	03/11/17	Sun	1230	Rear-End	0	0	1	Day	Dry	Not Coded
345	0.000	03/11/17	Sun	1242	Backed Into	0	1	0	Day	Dry	Not Coded

State of Florida Department of Transportation
CRASH SUMMARY

SECTION: Ludlam Trail Corridor f — STATE ROUTE: #N/A
ROADWAY LIMITS: 0 — M.P. 0.000 TO 0.000 — ENGINEER: 0
STUDY PERIOD: FROM 1/ 2017 TO 12/ 2017 — COUNTY: Miami-Dade

No.	MILE POST	DATE	DAY	TIME	CRASH TYPE	FATAL	INJURIES	PROP DAM	DAY / NIGHT	WET / DRY	CONTRIBUTING CAUSE (VEHICLE ONLY)
346	0.000	03/12/17	Mon	0948	Sideswipe	0	0	1	Day	Dry	Not Coded
347	0.000	03/13/17	Tue	1325	Rear-End	0	0	1	Day	Dry	Not Coded
348	0.000	03/13/17	Tue	0930	Angle	0	0	1	Night	Dry	Not Coded
349	0.000	03/13/17	Tue	2027	Sideswipe	0	0	1	Night	Dry	Not Coded
350	0.000	03/13/17	Tue	1218	Right-Turn	0	0	1	Day	Dry	Not Coded
351	0.000	03/13/17	Tue	1310	Not Coded	0	0	1	Day	Dry	Not Coded
352	0.000	03/13/17	Tue	1730	Sideswipe	0	0	1	Day	Dry	Not Coded
353	0.000	03/13/17	Tue	1055	Rear-End	0	0	1	Day	Dry	Not Coded
354	0.000	03/14/17	Wed	2358	Rear-End	0	0	1	Day	Dry	Not Coded
355	0.000	03/14/17	Wed	1140	Right-Turn	0	0	1	Day	Dry	Not Coded
356	0.000	03/14/17	Wed	1720	Angle	0	0	1	Day	Dry	Not Coded
357	0.000	03/14/17	Wed	1423	Sideswipe	0	0	1	Day	Dry	Not Coded
358	0.000	03/14/17	Wed	0826	Sideswipe	0	0	1	Day	Dry	Not Coded
359	0.000	03/15/17	Thu	1630	Rear-End	0	0	1	Day	Dry	Not Coded
360	0.000	03/15/17	Thu	1812	Angle	0	0	1	Day	Dry	Not Coded
361	0.000	03/15/17	Thu	1855	Rear-End	0	0	1	Day	Dry	Not Coded
362	0.000	03/15/17	Thu	1820	Angle	0	0	1	Day	Dry	Not Coded
363	0.000	03/15/17	Thu	1730	Rear-End	0	0	1	Day	Dry	Not Coded
364	0.000	03/16/17	Fri	1407	Rear-End	0	0	1	Day	Dry	Not Coded
365	0.000	03/16/17	Fri	2319	Rear-End	0	0	1	Night	Dry	Not Coded
366	0.000	03/16/17	Fri	0942	Rear-End	0	1	0	Day	Dry	Not Coded
367	0.000	03/16/17	Fri	1644	Rear-End	0	0	1	Day	Dry	Not Coded
368	0.000	03/16/17	Fri	1458	Rear-End	0	0	1	Day	Dry	Not Coded
369	0.000	03/16/17	Fri	1355	Angle	0	0	1	Day	Dry	Not Coded
370	0.000	03/17/17	Sat	1530	Sideswipe	0	0	1	Day	Dry	Not Coded
371	0.000	03/17/17	Sat	1208	Sideswipe	0	0	1	Day	Dry	Not Coded
372	0.000	03/17/17	Sat	1654	Angle	0	0	1	Day	Dry	Not Coded
373	0.000	03/17/17	Sat	1613	Rear-End	0	0	1	Day	Dry	Not Coded
374	0.000	03/17/17	Sat	0055	Angle	0	0	1	Night	Dry	Not Coded
375	0.000	03/18/17	Sun	0740	Left-Turn	0	0	1	Day	Dry	Not Coded
376	0.000	03/18/17	Sun	0456	Sideswipe	0	0	1	Night	Dry	Not Coded
377	0.000	03/19/17	Mon	1830	Rear-End	0	0	1	Day	Dry	Not Coded
378	0.000	03/19/17	Mon	1705	Parked Motor Vehicle	0	1	0	Day	Dry	Not Coded
379	0.000	03/19/17	Mon	0350	Sideswipe	0	1	0	Night	Dry	Not Coded
380	0.000	03/19/17	Mon	1409	Sideswipe	0	0	1	Day	Dry	Not Coded
381	0.000	03/20/17	Tue	2250	Sideswipe	0	0	1	Night	Dry	Not Coded
382	0.000	03/20/17	Tue	1749	Angle	0	0	1	Day	Dry	Not Coded
383	0.000	03/20/17	Tue	2150	Angle	0	0	1	Night	Dry	Not Coded
384	0.000	03/20/17	Tue	1919	Tree (Standing)	0	0	1	Day	Dry	Not Coded
385	0.000	03/20/17	Tue	1824	Angle	0	0	1	Day	Dry	Not Coded
386	0.000	03/20/17	Tue	1713	Tree (Standing)	0	0	1	Day	Dry	Not Coded
387	0.000	03/21/17	Wed	1500	Left-Turn	0	0	1	Day	Dry	Not Coded
388	0.000	03/21/17	Wed	2205	Angle	0	0	1	Night	Dry	Not Coded
389	0.000	03/21/17	Wed	1338	Angle	0	0	1	Day	Dry	Not Coded
390	0.000	03/21/17	Wed	1526	Rear-End	0	0	1	Day	Dry	Not Coded
391	0.000	03/21/17	Wed	0835	Sideswipe	0	0	1	Day	Dry	Not Coded
392	0.000	03/21/17	Wed	1345	Rear-End	0	0	1	Day	Dry	Not Coded
393	0.000	03/22/17	Thu	0753	Rear-End	0	0	1	Day	Dry	Not Coded
394	0.000	03/22/17	Thu	0057	Rear-End	0	1	0	Night	Dry	Not Coded
395	0.000	03/22/17	Thu	0858	Sideswipe	0	0	1	Day	Dry	Not Coded
396	0.000	03/22/17	Thu	1805	Angle	0	0	1	Day	Dry	Not Coded
397	0.000	03/22/17	Thu	1300	Rear-End	0	0	1	Day	Dry	Not Coded
398	0.000	03/22/17	Thu	1510	Angle	0	0	1	Day	Dry	Not Coded
399	0.000	03/22/17	Thu	0805	Not Coded	0	0	1	Day	Dry	Not Coded
400	0.000	03/22/17	Thu	1345	Angle	0	0	1	Day	Dry	Not Coded
401	0.000	03/23/17	Fri	1008	Rear-End	0	0	1	Day	Dry	Not Coded
402	0.000	03/23/17	Fri	1950	Sideswipe	0	0	1	Night	Dry	Not Coded
403	0.000	03/23/17	Fri	0947	Rear-End	0	0	1	Day	Dry	Not Coded
404	0.000	03/24/17	Sat	1839	Rear-End	0	0	1	Day	Dry	Not Coded
405	0.000	03/24/17	Sat	1803	Rear-End	0	0	1	Day	Dry	Not Coded
406	0.000	03/24/17	Sat	1225	Left-Turn	0	1	0	Day	Wet	Not Coded
407	0.000	03/25/17	Sun	2230	Left-Turn	0	1	0	Night	Wet	Not Coded
408	0.000	03/25/17	Sun	2002	Sideswipe	0	0	1	Night	Wet	Not Coded
409	0.000	03/27/17	Tue	2147	Not Coded	0	0	1	Night	Dry	Not Coded
410	0.000	03/27/17	Tue	1440	Rear-End	0	0	1	Day	Dry	Not Coded
411	0.000	03/27/17	Tue	1340	Rear-End	0	0	1	Day	Dry	Not Coded
412	0.000	03/27/17	Tue	2035	Left-Turn	0	1	0	Day	Dry	Not Coded
413	0.000	03/27/17	Tue	1810	Backed Into	0	0	1	Day	Dry	Not Coded
414	0.000	03/28/17	Wed	1305	Parked Motor Vehicle	0	0	1	Day	Dry	Not Coded

State of Florida Department of Transportation
CRASH SUMMARY

SECTION: Ludlam Trail Corridor f — STATE ROUTE: #N/A
ROADWAY LIMITS: 0 — M.P. 0.000 TO 0.000 — ENGINEER: 0
STUDY PERIOD: FROM 1/ 2017 TO 12/ 2017 — COUNTY: Miami-Dade

No.	MILE POST	DATE	DAY	TIME	CRASH TYPE	FATAL	INJURIES	PROP DAM	DAY / NIGHT	WET / DRY	CONTRIBUTING CAUSE (VEHICLE ONLY)
415	0.000	03/28/17	Wed	1215	Sideswipe	0	0	1	Day	Dry	Not Coded
416	0.000	03/28/17	Wed	1413	Sideswipe	0	0	1	Day	Dry	Not Coded
417	0.000	03/28/17	Wed	1350	Sideswipe	0	0	1	Day	Dry	Not Coded
418	0.000	03/29/17	Thu	1515	Left-Turn	0	1	0	Day	Dry	Not Coded
419	0.000	03/29/17	Thu	1515	Rear-End	0	1	0	Day	Dry	Not Coded
420	0.000	03/29/17	Thu	1414	Pedalcycle	0	0	1	Day	Dry	Not Coded
421	0.000	03/29/17	Thu	1411	Rear-End	0	1	0	Day	Dry	Not Coded
422	0.000	03/29/17	Thu	0940	Rear-End	0	0	1	Day	Dry	Not Coded
423	0.000	03/29/17	Thu	1631	Left-Turn	0	1	0	Day	Dry	Not Coded
424	0.000	03/30/17	Fri	1439	Rear-End	0	0	1	Day	Dry	Not Coded
425	0.000	03/30/17	Fri	1630	Rear-End	0	0	1	Day	Dry	Not Coded
426	0.000	03/30/17	Fri	1334	Angle	0	0	1	Day	Dry	Not Coded
427	0.000	03/30/17	Fri	1921	Angle	0	0	1	Day	Dry	Not Coded
428	0.000	03/30/17	Fri	0753	Rear-End	0	0	1	Day	Dry	Not Coded
429	0.000	03/30/17	Fri	1926	Sideswipe	0	1	0	Night	Dry	Not Coded
430	0.000	03/30/17	Fri	1840	Rear-End	0	0	1	Day	Dry	Not Coded
431	0.000	03/30/17	Fri	1640	Rear-End	0	0	1	Day	Dry	Not Coded
432	0.000	03/30/17	Fri	0853	Rear-End	0	0	1	Day	Dry	Not Coded
433	0.000	03/30/17	Fri	0802	Sideswipe	0	0	1	Day	Dry	Not Coded
434	0.000	03/31/17	Sat	1633	Angle	0	0	1	Day	Dry	Not Coded
435	0.000	03/31/17	Sat	1925	Rear-End	0	1	0	Night	Dry	Not Coded
436	0.000	03/31/17	Sat	1545	Rear-End	0	0	1	Day	Dry	Not Coded
437	0.000	03/31/17	Sat	2035	Not Coded	0	1	0	Night	Dry	Not Coded
438	0.000	04/01/17	Sun	1712	Angle	0	0	1	Day	Dry	Not Coded
439	0.000	04/01/17	Sun	1235	Angle	0	0	1	Day	Dry	Not Coded
440	0.000	04/02/17	Mon	1000	Rear-End	0	0	1	Day	Dry	Not Coded
441	0.000	04/02/17	Mon	1837	Backed Into	0	0	1	Day	Dry	Not Coded
442	0.000	04/02/17	Mon	2220	Rear-End	0	0	1	Night	Dry	Not Coded
443	0.000	04/03/17	Tue	1206	Left-Turn	0	0	1	Day	Dry	Not Coded
444	0.000	04/03/17	Tue	1707	Rear-End	0	0	1	Day	Dry	Not Coded
445	0.000	04/04/17	Wed	1251	Left-Turn	0	0	1	Day	Dry	Not Coded
446	0.000	04/04/17	Wed	1216	Rear-End	0	0	1	Day	Dry	Not Coded
447	0.000	04/04/17	Wed	1340	Sideswipe	0	0	1	Day	Dry	Not Coded
448	0.000	04/04/17	Wed	1725	Sideswipe	0	0	1	Day	Dry	Not Coded
449	0.000	04/04/17	Wed	1013	Rear-End	0	0	1	Day	Dry	Not Coded
450	0.000	04/04/17	Wed	1245	Rear-End	0	0	1	Day	Dry	Not Coded
451	0.000	04/04/17	Wed	2013	Left-Turn	0	1	0	Night	Dry	Not Coded
452	0.000	04/04/17	Wed	1330	Rear-End	0	0	1	Day	Dry	Not Coded
453	0.000	04/04/17	Wed	0952	Angle	0	0	1	Day	Dry	Not Coded
454	0.000	04/04/17	Wed	0830	Left-Turn	0	0	1	Day	Dry	Not Coded
455	0.000	04/04/17	Wed	1040	Rear-End	0	0	1	Day	Dry	Not Coded
456	0.000	04/04/17	Wed	1812	Rear-End	0	0	1	Day	Dry	Not Coded
457	0.000	04/04/17	Wed	1745	Parked Motor Vehicle	0	0	1	Day	Dry	Not Coded
458	0.000	04/04/17	Wed	1631	Rear-End	0	0	1	Day	Dry	Not Coded
459	0.000	04/05/17	Thu	2235	Rear-End	0	0	1	Night	Dry	Not Coded
460	0.000	04/05/17	Thu	0950	Rear-End	0	0	1	Day	Dry	Not Coded
461	0.000	04/05/17	Thu	0740	Angle	0	0	1	Day	Dry	Not Coded
462	0.000	04/05/17	Thu	1700	Rear-End	0	0	1	Day	Dry	Not Coded
463	0.000	04/05/17	Thu	1220	Not Coded	0	0	1	Day	Dry	Not Coded
464	0.000	04/05/17	Thu	1822	Rear-End	0	0	1	Day	Dry	Not Coded
465	0.000	04/05/17	Thu	1819	Rear-End	0	1	0	Day	Dry	Not Coded
466	0.000	04/05/17	Thu	1335	Left-Turn	0	0	1	Day	Dry	Not Coded
467	0.000	04/05/17	Thu	1614	Sideswipe	0	0	1	Day	Dry	Not Coded
468	0.000	04/06/17	Fri	1303	Sideswipe	0	0	1	Day	Dry	Not Coded
469	0.000	04/06/17	Fri	1920	Angle	0	1	0	Night	Dry	Not Coded
470	0.000	04/06/17	Fri	1629	Rear-End	0	0	1	Day	Dry	Not Coded
471	0.000	04/06/17	Fri	1833	Rear-End	0	0	1	Day	Dry	Not Coded
472	0.000	04/06/17	Fri	0717	Rear-End	0	0	1	Day	Dry	Not Coded
473	0.000	04/06/17	Fri	0008	Rear-End	0	0	1	Day	Dry	Not Coded
474	0.000	04/06/17	Fri	1321	Rear-End	0	0	1	Day	Dry	Not Coded
475	0.000	04/06/17	Fri	0820	Head-On	0	1	0	Day	Dry	Not Coded
476	0.000	04/06/17	Fri	1738	Angle	0	0	1	Day	Dry	Not Coded
477	0.000	04/07/17	Sat	0825	Left-Turn	0	0	1	Day	Dry	Not Coded
478	0.000	04/07/17	Sat	0904	Rear-End	0	1	0	Day	Dry	Not Coded
479	0.000	04/07/17	Sat	1515	Rear-End	0	0	1	Day	Dry	Not Coded
480	0.000	04/07/17	Sat	0057	Rear-End	0	1	0	Night	Dry	Not Coded
481	0.000	04/07/17	Sat	1220	Rear-End	0	0	1	Day	Dry	Not Coded
482	0.000	04/07/17	Sat	2222	Rear-End	0	0	1	Night	Dry	Not Coded
483	0.000	04/08/17	Sun	2020	Rear-End	0	0	1	Night	Dry	Not Coded

State of Florida Department of Transportation
CRASH SUMMARY

SECTION: Ludlam Trail Corridor f — STATE ROUTE: #N/A
ROADWAY LIMITS: 0 — M.P. 0.000 TO 0.000 — ENGINEER: 0
STUDY PERIOD: FROM 1/ 2017 TO 12/ 2017 — COUNTY: Miami-Dade

No.	MILE POST	DATE	DAY	TIME	CRASH TYPE	FATAL	INJURIES	PROP DAM	DAY / NIGHT	WET / DRY	CONTRIBUTING CAUSE (VEHICLE ONLY)
484	0.000	04/08/17	Sun	0955	Sideswipe	0	0	1	Day	Dry	Not Coded
485	0.000	04/08/17	Sun	1040	Rear-End	0	0	1	Day	Dry	Not Coded
486	0.000	04/08/17	Sun	1343	Rear-End	0	0	1	Day	Dry	Not Coded
487	0.000	04/08/17	Sun	1119	Rear-End	0	1	0	Day	Dry	Not Coded
488	0.000	04/09/17	Mon	1525	Rear-End	0	0	1	Day	Dry	Not Coded
489	0.000	04/10/17	Tue	1713	Angle	0	0	1	Day	Dry	Not Coded
490	0.000	04/11/17	Wed	1340	Backed Into	0	0	1	Day	Dry	Not Coded
491	0.000	04/11/17	Wed	1800	Angle	0	0	1	Day	Dry	Not Coded
492	0.000	04/12/17	Thu	2107	Parked Motor Vehicle	0	1	0	Night	Wet	Not Coded
493	0.000	04/12/17	Thu	2025	Parked Motor Vehicle	0	1	0	Night	Wet	Not Coded
494	0.000	04/12/17	Thu	1800	Angle	0	0	1	Day	Dry	Not Coded
495	0.000	04/13/17	Fri	1150	Rear-End	0	0	1	Day	Dry	Not Coded
496	0.000	04/13/17	Fri	1824	Angle	0	0	1	Day	Dry	Not Coded
497	0.000	04/13/17	Fri	1102	Rear-End	0	0	1	Day	Dry	Not Coded
498	0.000	04/13/17	Fri	1342	Angle	0	0	1	Day	Dry	Not Coded
499	0.000	04/14/17	Sat	1311	Left-Turn	0	0	1	Day	Dry	Not Coded
500	0.000	04/14/17	Sat	1810	Left-Turn	0	0	1	Day	Dry	Not Coded
501	0.000	04/14/17	Sat	1520	Sideswipe	0	0	1	Day	Dry	Not Coded
502	0.000	04/14/17	Sat	0800	Rear-End	0	0	1	Unknown	Dry	Not Coded
503	0.000	04/14/17	Sat	1455	Rear-End	0	0	1	Day	Dry	Not Coded
504	0.000	04/15/17	Sun	2240	Left-Turn	0	0	1	Night	Dry	Not Coded
505	0.000	04/15/17	Sun	1245	Angle	0	1	0	Day	Dry	Not Coded
506	0.000	04/15/17	Sun	1336	Left-Turn	0	0	1	Day	Dry	Not Coded
507	0.000	04/15/17	Sun	0630	Rear-End	0	0	1	Day	Dry	Not Coded
508	0.000	04/16/17	Mon	0946	Rear-End	0	0	1	Day	Dry	Not Coded
509	0.000	04/17/17	Tue	1045	Sideswipe	0	0	1	Day	Dry	Not Coded
510	0.000	04/17/17	Tue	0905	Sideswipe	0	0	1	Day	Dry	Not Coded
511	0.000	04/17/17	Tue	1530	Backed Into	0	1	0	Day	Dry	Not Coded
512	0.000	04/17/17	Tue	0956	Left-Turn	0	0	1	Day	Dry	Not Coded
513	0.000	04/17/17	Tue	1156	Angle	0	0	1	Day	Dry	Not Coded
514	0.000	04/18/17	Wed	2002	Rear-End	0	1	0	Night	Dry	Not Coded
515	0.000	04/18/17	Wed	1338	Angle	0	0	1	Day	Dry	Not Coded
516	0.000	04/18/17	Wed	0717	Rear-End	0	0	1	Day	Dry	Not Coded
517	0.000	04/19/17	Thu	1420	Right-Turn	0	0	1	Day	Dry	Not Coded
518	0.000	04/19/17	Thu	0955	Rear-End	0	0	1	Day	Dry	Not Coded
519	0.000	04/19/17	Thu	0642	Angle	0	0	1	Day	Dry	Not Coded
520	0.000	04/19/17	Thu	1550	Rear-End	0	0	1	Day	Dry	Not Coded
521	0.000	04/19/17	Thu	1730	Angle	0	0	1	Day	Dry	Not Coded
522	0.000	04/19/17	Thu	1633	Rear-End	0	0	1	Day	Dry	Not Coded
523	0.000	04/19/17	Thu	1541	Sideswipe	0	0	1	Day	Dry	Not Coded
524	0.000	04/19/17	Thu	1145	Sideswipe	0	0	1	Day	Dry	Not Coded
525	0.000	04/20/17	Fri	2020	Rear-End	0	0	1	Night	Dry	Not Coded
526	0.000	04/20/17	Fri	1330	Sideswipe	0	0	1	Day	Wet	Not Coded
527	0.000	04/20/17	Fri	1445	Right-Turn	0	0	1	Day	Wet	Not Coded
528	0.000	04/20/17	Fri	1545	Rear-End	0	0	1	Day	Dry	Not Coded
529	0.000	04/21/17	Sat	1648	Angle	0	0	1	Day	Dry	Not Coded
530	0.000	04/21/17	Sat	1505	Backed Into	0	0	1	Day	Dry	Not Coded
531	0.000	04/21/17	Sat	1411	Rear-End	0	0	1	Day	Dry	Not Coded
532	0.000	04/21/17	Sat	0353	Left-Turn	0	0	1	Night	Dry	Not Coded
533	0.000	04/22/17	Sun	1440	Angle	0	0	1	Day	Dry	Not Coded
534	0.000	04/22/17	Sun	2015	Left-Turn	0	1	0	Night	Dry	Not Coded
535	0.000	04/23/17	Mon	1640	Rear-End	0	0	1	Day	Wet	Not Coded
536	0.000	04/23/17	Mon	0545	Sideswipe	0	0	1	Day	Dry	Not Coded
537	0.000	04/23/17	Mon	2050	Rear-End	0	0	1	Night	Dry	Not Coded
538	0.000	04/24/17	Tue	1647	Rear-End	0	0	1	Day	Dry	Not Coded
539	0.000	04/24/17	Tue	1749	Rear-End	0	0	1	Day	Dry	Not Coded
540	0.000	04/25/17	Wed	1832	Rear-End	0	0	1	Day	Dry	Not Coded
541	0.000	04/25/17	Wed	2133	Angle	0	0	1	Night	Dry	Not Coded
542	0.000	04/25/17	Wed	1050	Backed Into	0	0	1	Day	Dry	Not Coded
543	0.000	04/25/17	Wed	1805	Left-Turn	0	0	1	Day	Dry	Not Coded
544	0.000	04/25/17	Wed	0841	Rear-End	0	0	1	Day	Dry	Not Coded
545	0.000	04/26/17	Thu	1230	Right-Turn	0	0	1	Day	Dry	Not Coded
546	0.000	04/26/17	Thu	1409	Angle	0	0	1	Day	Dry	Not Coded
547	0.000	04/26/17	Thu	0813	Left-Turn	0	0	1	Day	Dry	Not Coded
548	0.000	04/26/17	Thu	1820	Other Non-Fixed Object	0	0	1	Day	Dry	Not Coded
549	0.000	04/26/17	Thu	0800	Angle	0	0	1	Day	Dry	Not Coded
550	0.000	04/26/17	Thu	0900	Not Coded	0	1	0	Day	Dry	Not Coded
551	0.000	04/26/17	Thu	1619	Left-Turn	0	0	1	Day	Dry	Not Coded
552	0.000	04/27/17	Fri	1229	Rear-End	0	0	1	Day	Dry	Not Coded

State of Florida Department of Transportation
CRASH SUMMARY

SECTION: Ludlam Trail Corridor f — STATE ROUTE: #N/A
ROADWAY LIMITS: 0 — M.P. 0.000 TO 0.000 — ENGINEER: 0
STUDY PERIOD: FROM 1/ 2017 TO 12/ 2017 — COUNTY: Miami-Dade

No.	MILE POST	DATE	DAY	TIME	CRASH TYPE	FATAL	INJURIES	PROP DAM	DAY / NIGHT	WET / DRY	CONTRIBUTING CAUSE (VEHICLE ONLY)
553	0.000	04/27/17	Fri	1412	Rear-End	0	0	1	Day	Dry	Not Coded
554	0.000	04/28/17	Sat	0730	Not Coded	0	1	0	Day	Dry	Not Coded
555	0.000	04/28/17	Sat	1735	Rear-End	0	0	1	Day	Dry	Not Coded
556	0.000	04/28/17	Sat	0807	Left-Turn	0	0	1	Day	Dry	Not Coded
557	0.000	04/28/17	Sat	1208	Right-Turn	0	0	1	Day	Dry	Not Coded
558	0.000	04/28/17	Sat	1436	Rear-End	0	1	0	Day	Dry	Not Coded
559	0.000	04/29/17	Sun	1410	Rear-End	0	0	1	Day	Dry	Not Coded
560	0.000	04/29/17	Sun	1300	Sideswipe	0	0	1	Day	Dry	Not Coded
561	0.000	04/29/17	Sun	1040	Head-On	0	0	1	Day	Dry	Not Coded
562	0.000	04/29/17	Sun	1220	Rear-End	0	0	1	Day	Dry	Not Coded
563	0.000	04/29/17	Sun	1905	Angle	0	0	1	Day	Dry	Not Coded
564	0.000	04/29/17	Sun	0715	Left-Turn	0	0	1	Day	Dry	Not Coded
565	0.000	04/29/17	Sun	1252	Right-Turn	0	0	1	Day	Dry	Not Coded
566	0.000	04/29/17	Sun	1345	Sideswipe	0	0	1	Day	Dry	Not Coded
567	0.000	04/29/17	Sun	0920	Rear-End	0	0	1	Day	Dry	Not Coded
568	0.000	04/30/17	Mon	1447	Left-Turn	0	1	0	Day	Dry	Not Coded
569	0.000	05/01/17	Tue	2153	Rear-End	0	0	1	Night	Dry	Not Coded
570	0.000	05/01/17	Tue	0830	Rear-End	0	0	1	Day	Dry	Not Coded
571	0.000	05/01/17	Tue	1700	Angle	0	1	0	Day	Dry	Not Coded
572	0.000	05/01/17	Tue	1500	Rear-End	0	0	1	Day	Dry	Not Coded
573	0.000	05/01/17	Tue	1945	Rear-End	0	0	1	Day	Dry	Not Coded
574	0.000	05/01/17	Tue	1750	Sideswipe	0	0	1	Day	Dry	Not Coded
575	0.000	05/02/17	Wed	2100	Rear-End	0	0	1	Night	Wet	Not Coded
576	0.000	05/02/17	Wed	1130	Left-Turn	0	1	0	Day	Dry	Not Coded
577	0.000	05/02/17	Wed	0717	Angle	0	0	1	Day	Dry	Not Coded
578	0.000	05/02/17	Wed	2050	Angle	0	0	1	Night	Wet	Not Coded
579	0.000	05/02/17	Wed	1045	Rear-End	0	0	1	Day	Dry	Not Coded
580	0.000	05/02/17	Wed	1513	Left-Turn	0	0	1	Day	Dry	Not Coded
581	0.000	05/02/17	Wed	1615	Rear-End	0	0	1	Day	Dry	Not Coded
582	0.000	05/02/17	Wed	1715	Left-Turn	0	1	0	Day	Dry	Not Coded
583	0.000	05/03/17	Thu	1730	Angle	0	0	1	Day	Dry	Not Coded
584	0.000	05/03/17	Thu	0810	Angle	0	0	1	Day	Dry	Not Coded
585	0.000	05/03/17	Thu	1842	Left-Turn	0	0	1	Day	Dry	Not Coded
586	0.000	05/03/17	Thu	2119	Angle	0	1	0	Night	Dry	Not Coded
587	0.000	05/04/17	Fri	1338	Rear-End	0	0	1	Day	Dry	Not Coded
588	0.000	05/04/17	Fri	1744	Rear-End	0	0	1	Day	Dry	Not Coded
589	0.000	05/04/17	Fri	1904	Rear-End	0	1	0	Day	Dry	Not Coded
590	0.000	05/04/17	Fri	1325	Rear-End	0	0	1	Day	Dry	Not Coded
591	0.000	05/04/17	Fri	0700	Rear-End	0	1	0	Day	Dry	Not Coded
592	0.000	05/04/17	Fri	1825	Rear-End	0	1	0	Day	Dry	Not Coded
593	0.000	05/05/17	Sat	1201	Rear-End	0	0	1	Day	Wet	Not Coded
594	0.000	05/05/17	Sat	1152	Angle	0	0	1	Day	Wet	Not Coded
595	0.000	05/05/17	Sat	2015	Rear-End	0	0	1	Night	Dry	Not Coded
596	0.000	05/05/17	Sat	1315	Rear-End	0	0	1	Day	Wet	Not Coded
597	0.000	05/05/17	Sat	2015	Not Coded	0	0	1	Night	Dry	Not Coded
598	0.000	05/05/17	Sat	1254	Left-Turn	0	0	1	Day	Dry	Not Coded
599	0.000	05/06/17	Sun	1413	Rear-End	0	0	1	Day	Dry	Not Coded
600	0.000	05/06/17	Sun	1016	Angle	0	0	1	Day	Dry	Not Coded
601	0.000	05/06/17	Sun	1232	Left-Turn	0	0	1	Day	Dry	Not Coded
602	0.000	05/07/17	Mon	0915	Rear-End	0	0	1	Day	Dry	Not Coded
603	0.000	05/07/17	Mon	1830	Right-Turn	0	0	1	Day	Dry	Not Coded
604	0.000	05/07/17	Mon	1832	Angle	0	0	1	Day	Dry	Not Coded
605	0.000	05/07/17	Mon	1806	Rear-End	0	0	1	Day	Dry	Not Coded
606	0.000	05/07/17	Mon	2148	Left-Turn	0	0	1	Night	Dry	Not Coded
607	0.000	05/07/17	Mon	2248	Rear-End	0	0	1	Night	Dry	Not Coded
608	0.000	05/08/17	Tue	1617	Rear-End	0	0	1	Day	Dry	Not Coded
609	0.000	05/08/17	Tue	0920	Angle	0	0	1	Day	Dry	Not Coded
610	0.000	05/08/17	Tue	1609	Rear-End	0	0	1	Day	Dry	Not Coded
611	0.000	05/08/17	Tue	1743	Right-Turn	0	0	1	Day	Dry	Not Coded
612	0.000	05/08/17	Tue	1442	Rear-End	0	0	1	Day	Dry	Not Coded
613	0.000	05/08/17	Tue	1048	Angle	0	0	1	Day	Dry	Not Coded
614	0.000	05/09/17	Wed	0943	Rear-End	0	0	1	Day	Dry	Not Coded
615	0.000	05/09/17	Wed	0647	Sideswipe	0	0	1	Day	Dry	Not Coded
616	0.000	05/09/17	Wed	0803	Backed Into	0	0	1	Day	Dry	Not Coded
617	0.000	05/09/17	Wed	1100	Rear-End	0	0	1	Day	Dry	Not Coded
618	0.000	05/10/17	Thu	1844	Left-Turn	0	0	1	Day	Dry	Not Coded
619	0.000	05/11/17	Fri	0710	Left-Turn	0	0	1	Day	Dry	Not Coded
620	0.000	05/11/17	Fri	1655	Rear-End	0	0	1	Day	Dry	Not Coded
621	0.000	05/11/17	Fri	1617	Backed Into	0	0	1	Day	Dry	Not Coded

State of Florida Department of Transportation
CRASH SUMMARY

SECTION: Ludlam Trail Corridor f — STATE ROUTE: #N/A
ROADWAY LIMITS: 0 — M.P. 0.000 TO 0.000 — ENGINEER: 0
STUDY PERIOD: FROM 1/ 2017 TO 12/ 2017 — COUNTY: Miami-Dade

No.	MILE POST	DATE	DAY	TIME	CRASH TYPE	FATAL	INJURIES	PROP DAM	DAY / NIGHT	WET / DRY	CONTRIBUTING CAUSE (VEHICLE ONLY)
622	0.000	05/11/17	Fri	1010	Left-Turn	0	0	1	Day	Dry	Not Coded
623	0.000	05/12/17	Sat	0806	Sideswipe	0	1	0	Day	Dry	Not Coded
624	0.000	05/12/17	Sat	0828	Rear-End	0	0	1	Day	Dry	Not Coded
625	0.000	05/12/17	Sat	1653	Sideswipe	0	0	1	Day	Dry	Not Coded
626	0.000	05/12/17	Sat	1247	Rear-End	0	0	1	Day	Dry	Not Coded
627	0.000	05/12/17	Sat	1315	Angle	0	0	1	Day	Dry	Not Coded
628	0.000	05/15/17	Tue	1130	Angle	0	0	1	Day	Dry	Not Coded
629	0.000	05/15/17	Tue	1418	Angle	0	1	0	Day	Dry	Not Coded
630	0.000	05/16/17	Wed	0606	Rear-End	0	0	1	Day	Dry	Not Coded
631	0.000	05/16/17	Wed	1340	Left-Turn	0	0	1	Day	Dry	Not Coded
632	0.000	05/16/17	Wed	1158	Rear-End	0	0	1	Day	Dry	Not Coded
633	0.000	05/16/17	Wed	0733	Rear-End	0	0	1	Day	Dry	Not Coded
634	0.000	05/16/17	Wed	1155	Rear-End	0	1	0	Day	Dry	Not Coded
635	0.000	05/16/17	Wed	1651	Left-Turn	0	0	1	Day	Dry	Not Coded
636	0.000	05/17/17	Thu	2300	Rear-End	0	0	1	Night	Dry	Not Coded
637	0.000	05/17/17	Thu	0740	Rear-End	0	1	0	Day	Dry	Not Coded
638	0.000	05/17/17	Thu	0727	Rear-End	0	0	1	Day	Dry	Not Coded
639	0.000	05/17/17	Thu	0900	Sideswipe	0	0	1	Day	Dry	Not Coded
640	0.000	05/17/17	Thu	1103	Angle	0	0	1	Day	Dry	Not Coded
641	0.000	05/18/17	Fri	1846	Left-Turn	0	1	0	Day	Wet	Not Coded
642	0.000	05/18/17	Fri	1609	Rear-End	0	1	0	Day	Dry	Not Coded
643	0.000	05/18/17	Fri	0948	Angle	0	0	1	Day	Dry	Not Coded
644	0.000	05/18/17	Fri	1410	Not Coded	0	1	0	Day	Dry	Not Coded
645	0.000	05/19/17	Sat	1055	Sideswipe	0	0	1	Day	Dry	Not Coded
646	0.000	05/19/17	Sat	2008	Right-Turn	0	0	1	Night	Dry	Not Coded
647	0.000	05/19/17	Sat	0820	Rear-End	0	0	1	Day	Dry	Not Coded
648	0.000	05/20/17	Sun	2244	Sideswipe	0	1	0	Night	Dry	Not Coded
649	0.000	05/21/17	Mon	0940	Angle	0	0	1	Day	Dry	Not Coded
650	0.000	05/22/17	Tue	0750	Rear-End	0	0	1	Day	Dry	Not Coded
651	0.000	05/23/17	Wed	0900	Angle	0	0	1	Day	Dry	Not Coded
652	0.000	05/23/17	Wed	2100	Right-Turn	0	1	0	Night	Dry	Not Coded
653	0.000	05/23/17	Wed	1543	Backed Into	0	0	1	Day	Dry	Not Coded
654	0.000	05/23/17	Wed	0927	Rear-End	0	0	1	Day	Dry	Not Coded
655	0.000	05/24/17	Thu	1510	Rear-End	0	1	0	Day	Dry	Not Coded
656	0.000	05/25/17	Fri	2217	Angle	0	1	0	Night	Dry	Not Coded
657	0.000	05/25/17	Fri	1736	Angle	0	0	1	Day	Dry	Not Coded
658	0.000	05/25/17	Fri	1740	Rear-End	0	0	1	Day	Dry	Not Coded
659	0.000	05/25/17	Fri	2035	Rear-End	0	0	1	Night	Dry	Not Coded
660	0.000	05/26/17	Sat	1530	Rear-End	0	0	1	Day	Dry	Not Coded
661	0.000	05/27/17	Sun	1031	Rear-End	0	0	1	Day	Dry	Not Coded
662	0.000	05/27/17	Sun	1912	Angle	0	0	1	Day	Dry	Not Coded
663	0.000	05/28/17	Mon	0340	Rear-End	0	1	0	Night	Dry	Not Coded
664	0.000	05/28/17	Mon	1617	Head-On	0	0	1	Day	Dry	Not Coded
665	0.000	05/28/17	Mon	1125	Left-Turn	0	0	1	Day	Dry	Not Coded
666	0.000	05/29/17	Tue	1705	Rear-End	0	1	0	Day	Dry	Not Coded
667	0.000	05/30/17	Wed	1208	Sideswipe	0	0	1	Day	Dry	Not Coded
668	0.000	05/30/17	Wed	1423	Rear-End	0	0	1	Day	Dry	Not Coded
669	0.000	05/30/17	Wed	1815	Rear-End	0	0	1	Day	Dry	Not Coded
670	0.000	05/30/17	Wed	2110	Backed Into	0	0	1	Day	Dry	Not Coded
671	0.000	05/30/17	Wed	2240	Left-Turn	0	1	0	Night	Dry	Not Coded
672	0.000	05/30/17	Wed	1650	Left-Turn	0	0	1	Day	Dry	Not Coded
673	0.000	05/30/17	Wed	1440	Angle	0	0	1	Day	Dry	Not Coded
674	0.000	05/31/17	Thu	1342	Rear-End	0	0	1	Day	Dry	Not Coded
675	0.000	05/31/17	Thu	1455	Angle	0	0	1	Day	Dry	Not Coded
676	0.000	05/31/17	Thu	0740	Rear-End	0	0	1	Day	Dry	Not Coded
677	0.000	05/31/17	Thu	1520	Rear-End	0	0	1	Day	Dry	Not Coded
678	0.000	05/31/17	Thu	2115	Left-Turn	0	0	1	Night	Dry	Not Coded
679	0.000	05/31/17	Thu	2118	Left-Turn	0	0	1	Night	Dry	Not Coded
680	0.000	06/01/17	Fri	0833	Left-Turn	0	0	1	Day	Dry	Not Coded
681	0.000	06/01/17	Fri	1400	Overturn/Rollover	0	0	1	Day	Dry	Not Coded
682	0.000	06/01/17	Fri	1440	Angle	0	0	1	Day	Dry	Not Coded
683	0.000	06/01/17	Fri	0816	Rear-End	0	1	0	Day	Wet	Not Coded
684	0.000	06/02/17	Sat	1119	Angle	0	0	1	Day	Wet	Not Coded
685	0.000	06/02/17	Sat	1835	Sideswipe	0	1	0	Day	Wet	Not Coded
686	0.000	06/02/17	Sat	0855	Rear-End	0	0	1	Day	Wet	Not Coded
687	0.000	06/02/17	Sat	1445	Rear-End	0	0	1	Day	Wet	Not Coded
688	0.000	06/02/17	Sat	1715	Rear-End	0	0	1	Day	Wet	Not Coded
689	0.000	06/02/17	Sat	1135	Not Coded	0	0	1	Day	Wet	Not Coded
690	0.000	06/03/17	Sun	0920	Angle	0	0	1	Day	Wet	Not Coded

State of Florida Department of Transportation
CRASH SUMMARY

SECTION: Ludlam Trail Corridor f — STATE ROUTE: #N/A
ROADWAY LIMITS: 0 — M.P. 0.000 TO 0.000 — ENGINEER: 0
STUDY PERIOD: FROM 1/ 2017 TO 12/ 2017 — COUNTY: Miami-Dade

No.	MILE POST	DATE	DAY	TIME	CRASH TYPE	FATAL	INJURIES	PROP DAM	DAY / NIGHT	WET / DRY	CONTRIBUTING CAUSE (VEHICLE ONLY)
691	0.000	06/05/17	Tue	1751	Rear-End	0	0	1	Day	Dry	Not Coded
692	0.000	06/05/17	Tue	0920	Angle	0	0	1	Day	Dry	Not Coded
693	0.000	06/05/17	Tue	1425	Right-Turn	0	0	1	Day	Dry	Not Coded
694	0.000	06/06/17	Wed	1341	Sideswipe	0	0	1	Day	Wet	Not Coded
695	0.000	06/06/17	Wed	2145	Angle	0	1	0	Night	Wet	Not Coded
696	0.000	06/06/17	Wed	1321	Rear-End	0	0	1	Day	Wet	Not Coded
697	0.000	06/06/17	Wed	0650	Rear-End	0	0	1	Day	Wet	Not Coded
698	0.000	06/06/17	Wed	0850	Rear-End	0	0	1	Day	Wet	Not Coded
699	0.000	06/07/17	Thu	1355	Rear-End	0	0	1	Day	Wet	Not Coded
700	0.000	06/07/17	Thu	1259	Sideswipe	0	0	1	Day	Wet	Not Coded
701	0.000	06/07/17	Thu	0920	Not Coded	0	1	0	Day	Wet	Not Coded
702	0.000	06/08/17	Fri	0705	Left-Turn	0	0	1	Day	Dry	Not Coded
703	0.000	06/08/17	Fri	1653	Sideswipe	0	0	1	Day	Wet	Not Coded
704	0.000	06/08/17	Fri	1336	Right-Turn	0	0	1	Day	Dry	Not Coded
705	0.000	06/08/17	Fri	1321	Rear-End	0	0	1	Day	Dry	Not Coded
706	0.000	06/08/17	Fri	1715	Angle	0	1	0	Day	Dry	Not Coded
707	0.000	06/09/17	Sat	1730	Angle	0	0	1	Day	Wet	Not Coded
708	0.000	06/09/17	Sat	1206	Left-Turn	0	0	1	Day	Dry	Not Coded
709	0.000	06/09/17	Sat	1520	Angle	0	0	1	Day	Dry	Not Coded
710	0.000	06/10/17	Sun	1310	Left-Turn	0	0	1	Day	Wet	Not Coded
711	0.000	06/10/17	Sun	2139	Rear-End	0	0	1	Night	Dry	Not Coded
712	0.000	06/11/17	Mon	1156	Rear-End	0	0	1	Day	Dry	Not Coded
713	0.000	06/12/17	Tue	0625	Rear-End	0	0	1	Night	Dry	Not Coded
714	0.000	06/12/17	Tue	1915	Left-Turn	0	0	1	Night	Dry	Not Coded
715	0.000	06/12/17	Tue	1716	Angle	0	0	1	Day	Dry	Not Coded
716	0.000	06/12/17	Tue	2130	Angle	0	0	1	Night	Dry	Not Coded
717	0.000	06/13/17	Wed	2330	Fell/Jumped from Motor Vehicle	0	0	1	Night	Dry	Not Coded
718	0.000	06/13/17	Wed	1557	Angle	0	0	1	Day	Dry	Not Coded
719	0.000	06/13/17	Wed	1846	Left-Turn	0	0	1	Day	Dry	Not Coded
720	0.000	06/13/17	Wed	2130	Angle	0	1	0	Night	Dry	Not Coded
721	0.000	06/13/17	Wed	0824	Sideswipe	0	0	1	Day	Dry	Not Coded
722	0.000	06/13/17	Wed	1152	Left-Turn	0	0	1	Day	Dry	Not Coded
723	0.000	06/14/17	Thu	0938	Sideswipe	0	0	1	Day	Dry	Not Coded
724	0.000	06/14/17	Thu	1845	Angle	0	0	1	Day	Dry	Not Coded
725	0.000	06/14/17	Thu	1415	Parked Motor Vehicle	0	0	1	Day	Dry	Not Coded
726	0.000	06/15/17	Fri	1120	Angle	0	1	0	Day	Dry	Not Coded
727	0.000	06/15/17	Fri	1743	Rear-End	0	0	1	Night	Dry	Not Coded
728	0.000	06/15/17	Fri	1454	Left-Turn	0	0	1	Day	Dry	Not Coded
729	0.000	06/15/17	Fri	0736	Rear-End	0	0	1	Day	Dry	Not Coded
730	0.000	06/15/17	Fri	0818	Sideswipe	0	0	1	Day	Wet	Not Coded
731	0.000	06/16/17	Sat	1720	Left-Turn	0	0	1	Day	Dry	Not Coded
732	0.000	06/16/17	Sat	1005	Right-Turn	0	0	1	Day	Dry	Not Coded
733	0.000	06/17/17	Sun	1500	Angle	0	0	1	Day	Dry	Not Coded
734	0.000	06/17/17	Sun	1221	Rear-End	0	0	1	Day	Dry	Not Coded
735	0.000	06/18/17	Mon	1941	Angle	0	0	1	Day	Dry	Not Coded
736	0.000	06/19/17	Tue	0758	Sideswipe	0	0	1	Day	Dry	Not Coded
737	0.000	06/19/17	Tue	0520	Rear-End	0	0	1	Night	Dry	Not Coded
738	0.000	06/19/17	Tue	1438	Rear-End	0	0	1	Day	Wet	Not Coded
739	0.000	06/19/17	Tue	1730	Rear-End	0	0	1	Day	Wet	Not Coded
740	0.000	06/19/17	Tue	1525	Left-Turn	0	0	1	Day	Dry	Not Coded
741	0.000	06/20/17	Wed	1120	Rear-End	0	1	0	Day	Dry	Not Coded
742	0.000	06/20/17	Wed	0925	Sideswipe	0	0	1	Day	Dry	Not Coded
743	0.000	06/20/17	Wed	1548	Backed Into	0	0	1	Day	Dry	Not Coded
744	0.000	06/20/17	Wed	2055	Rear-End	0	0	1	Night	Dry	Not Coded
745	0.000	06/20/17	Wed	0814	Sideswipe	0	0	1	Day	Dry	Not Coded
746	0.000	06/20/17	Wed	2217	Not Coded	0	0	1	Night	Dry	Not Coded
747	0.000	06/21/17	Thu	1659	Rear-End	0	0	1	Day	Dry	Not Coded
748	0.000	06/21/17	Thu	0150	Rear-End	0	0	1	Night	Dry	Not Coded
749	0.000	06/21/17	Thu	1950	Backed Into	0	1	0	Day	Dry	Not Coded
750	0.000	06/21/17	Thu	1302	Rear-End	0	0	1	Day	Dry	Not Coded
751	0.000	06/21/17	Thu	1306	Angle	0	0	1	Day	Dry	Not Coded
752	0.000	06/21/17	Thu	1832	Angle	0	0	1	Day	Dry	Not Coded
753	0.000	06/22/17	Fri	1400	Angle	0	0	1	Day	Dry	Not Coded
754	0.000	06/22/17	Fri	0903	Backed Into	0	0	1	Day	Dry	Not Coded
755	0.000	06/22/17	Fri	1513	Parked Motor Vehicle	0	0	1	Day	Dry	Not Coded
756	0.000	06/22/17	Fri	1203	Sideswipe	0	0	1	Day	Dry	Not Coded
757	0.000	06/22/17	Fri	1300	Rear-End	0	0	1	Day	Dry	Not Coded
758	0.000	06/22/17	Fri	1027	Angle	0	0	1	Day	Dry	Not Coded
759	0.000	06/22/17	Fri	0749	Rear-End	0	0	1	Day	Dry	Not Coded

State of Florida Department of Transportation
CRASH SUMMARY

SECTION: Ludlam Trail Corridor f — STATE ROUTE: #N/A
ROADWAY LIMITS: 0 — M.P. 0.000 TO 0.000 — ENGINEER: 0
STUDY PERIOD: FROM 1/ 2017 TO 12/ 2017 — COUNTY: Miami-Dade

No.	MILE POST	DATE	DAY	TIME	CRASH TYPE	FATAL	INJURIES	PROP DAM	DAY / NIGHT	WET / DRY	CONTRIBUTING CAUSE (VEHICLE ONLY)
760	0.000	06/22/17	Fri	1506	Tree (Standing)	0	0	1	Day	Dry	Not Coded
761	0.000	06/23/17	Sat	1620	Left-Turn	0	0	1	Day	Dry	Not Coded
762	0.000	06/23/17	Sat	1246	Angle	0	0	1	Day	Dry	Not Coded
763	0.000	06/23/17	Sat	1700	Right-Turn	0	0	1	Day	Dry	Not Coded
764	0.000	06/23/17	Sat	1000	Right-Turn	0	0	1	Day	Dry	Not Coded
765	0.000	06/23/17	Sat	1210	Rear-End	0	0	1	Day	Dry	Not Coded
766	0.000	06/23/17	Sat	1441	Angle	0	1	0	Day	Dry	Not Coded
767	0.000	06/24/17	Sun	1300	Sideswipe	0	0	1	Day	Dry	Not Coded
768	0.000	06/24/17	Sun	1100	Left-Turn	0	0	1	Day	Dry	Not Coded
769	0.000	06/25/17	Mon	1920	Right-Turn	0	0	1	Night	Dry	Not Coded
770	0.000	06/25/17	Mon	1607	Sideswipe	0	0	1	Day	Dry	Not Coded
771	0.000	06/26/17	Tue	0400	Angle	0	0	1	Night	Dry	Not Coded
772	0.000	06/26/17	Tue	1600	Sideswipe	0	0	1	Day	Dry	Not Coded
773	0.000	06/26/17	Tue	1019	Sideswipe	0	0	1	Day	Dry	Not Coded
774	0.000	06/26/17	Tue	0905	Rear-End	0	0	1	Day	Dry	Not Coded
775	0.000	06/26/17	Tue	1700	Rear-End	0	0	1	Day	Dry	Not Coded
776	0.000	06/26/17	Tue	0950	Rear-End	0	0	1	Day	Dry	Not Coded
777	0.000	06/26/17	Tue	0928	Rear-End	0	0	1	Day	Dry	Not Coded
778	0.000	06/26/17	Tue	1030	Rear-End	0	0	1	Day	Dry	Not Coded
779	0.000	06/26/17	Tue	1122	Rear-End	0	0	1	Day	Dry	Not Coded
780	0.000	06/26/17	Tue	1615	Rear-End	0	0	1	Day	Dry	Not Coded
781	0.000	06/26/17	Tue	2330	Rear-End	0	0	1	Night	Dry	Not Coded
782	0.000	06/26/17	Tue	2250	Angle	0	0	1	Night	Dry	Not Coded
783	0.000	06/26/17	Tue	1556	Sideswipe	0	0	1	Day	Dry	Not Coded
784	0.000	06/27/17	Wed	0600	Rear-End	0	1	0	Day	Dry	Not Coded
785	0.000	06/27/17	Wed	2025	Rear-End	0	0	1	Night	Dry	Not Coded
786	0.000	06/27/17	Wed	1620	Curb	0	0	1	Day	Dry	Not Coded
787	0.000	06/28/17	Thu	1306	Left-Turn	0	0	1	Day	Dry	Not Coded
788	0.000	06/28/17	Thu	1825	Pedalcycle	0	0	1	Day	Dry	Not Coded
789	0.000	06/28/17	Thu	1603	Rear-End	0	0	1	Day	Dry	Not Coded
790	0.000	06/28/17	Thu	0845	Left-Turn	0	0	1	Day	Dry	Not Coded
791	0.000	06/29/17	Fri	0910	Left-Turn	0	0	1	Day	Dry	Not Coded
792	0.000	06/29/17	Fri	1048	Left-Turn	0	0	1	Day	Dry	Not Coded
793	0.000	06/29/17	Fri	0725	Sideswipe	0	0	1	Day	Dry	Not Coded
794	0.000	06/29/17	Fri	1412	Sideswipe	0	1	0	Day	Dry	Not Coded
795	0.000	06/29/17	Fri	1715	Not Coded	0	1	0	Day	Dry	Not Coded
796	0.000	06/30/17	Sat	0900	Parked Motor Vehicle	0	0	1	Day	Dry	Not Coded
797	0.000	06/30/17	Sat	2150	Angle	0	0	1	Night	Dry	Not Coded
798	0.000	07/02/17	Mon	2206	Angle	0	0	1	Night	Dry	Not Coded
799	0.000	07/02/17	Mon	1609	Sideswipe	0	0	1	Day	Dry	Not Coded
800	0.000	07/02/17	Mon	0050	Sideswipe	0	0	1	Night	Dry	Not Coded
801	0.000	07/02/17	Mon	1420	Rear-End	0	0	1	Day	Dry	Not Coded
802	0.000	07/03/17	Tue	1432	Left-Turn	0	0	1	Day	Dry	Not Coded
803	0.000	07/03/17	Tue	0810	Rear-End	0	0	1	Day	Dry	Not Coded
804	0.000	07/03/17	Tue	0925	Angle	0	0	1	Day	Dry	Not Coded
805	0.000	07/03/17	Tue	1243	Left-Turn	0	0	1	Day	Dry	Not Coded
806	0.000	07/03/17	Tue	1712	Rear-End	0	0	1	Day	Dry	Not Coded
807	0.000	07/04/17	Wed	1300	Angle	0	1	0	Day	Dry	Not Coded
808	0.000	07/04/17	Wed	1439	Rear-End	0	0	1	Day	Dry	Not Coded
809	0.000	07/05/17	Thu	1700	Angle	0	0	1	Day	Dry	Not Coded
810	0.000	07/05/17	Thu	0755	Angle	0	0	1	Day	Dry	Not Coded
811	0.000	07/05/17	Thu	1720	Angle	0	0	1	Day	Dry	Not Coded
812	0.000	07/06/17	Fri	0709	Rear-End	0	0	1	Day	Dry	Not Coded
813	0.000	07/06/17	Fri	1735	Left-Turn	0	0	1	Day	Dry	Not Coded
814	0.000	07/06/17	Fri	1537	Right-Turn	0	0	1	Day	Dry	Not Coded
815	0.000	07/06/17	Fri	1521	Rear-End	0	1	0	Day	Dry	Not Coded
816	0.000	07/06/17	Fri	1545	Angle	0	0	1	Day	Dry	Not Coded
817	0.000	07/06/17	Fri	1738	Sideswipe	0	0	1	Day	Dry	Not Coded
818	0.000	07/06/17	Fri	2200	Sideswipe	0	0	1	Night	Dry	Not Coded
819	0.000	07/06/17	Fri	1841	Rear-End	0	0	1	Day	Dry	Not Coded
820	0.000	07/06/17	Fri	1019	Rear-End	0	0	1	Day	Dry	Not Coded
821	0.000	07/07/17	Sat	1854	Backed Into	0	1	0	Day	Dry	Not Coded
822	0.000	07/08/17	Sun	1457	Not Coded	0	0	1	Day	Dry	Not Coded
823	0.000	07/08/17	Sun	1623	Angle	0	0	1	Day	Dry	Not Coded
824	0.000	07/08/17	Sun	1142	Rear-End	0	1	0	Day	Dry	Not Coded
825	0.000	07/09/17	Mon	1105	Left-Turn	0	0	1	Day	Dry	Not Coded
826	0.000	07/09/17	Mon	1955	Rear-End	0	0	1	Day	Dry	Not Coded
827	0.000	07/09/17	Mon	1852	Rear-End	0	0	1	Day	Dry	Not Coded
828	0.000	07/10/17	Tue	1704	Not Coded	0	0	1	Day	Dry	Not Coded

State of Florida Department of Transportation
CRASH SUMMARY

SECTION: Ludlam Trail Corridor f — STATE ROUTE: #N/A
ROADWAY LIMITS: 0 — M.P. 0.000 TO 0.000 — ENGINEER: 0
STUDY PERIOD: FROM 1/ 2017 TO 12/ 2017 — COUNTY: Miami-Dade

No.	MILE POST	DATE	DAY	TIME	CRASH TYPE	FATAL	INJURIES	PROP DAM	DAY / NIGHT	WET / DRY	CONTRIBUTING CAUSE (VEHICLE ONLY)
829	0.000	07/10/17	Tue	1254	Not Coded	0	0	1	Day	Dry	Not Coded
830	0.000	07/10/17	Tue	1606	Sideswipe	0	1	0	Day	Dry	Not Coded
831	0.000	07/11/17	Wed	1732	Backed Into	0	0	1	Day	Dry	Not Coded
832	0.000	07/11/17	Wed	1543	Left-Turn	0	0	1	Day	Dry	Not Coded
833	0.000	07/11/17	Wed	1448	Sideswipe	0	0	1	Day	Dry	Not Coded
834	0.000	07/11/17	Wed	1600	Angle	0	0	1	Day	Dry	Not Coded
835	0.000	07/12/17	Thu	1720	Rear-End	0	0	1	Day	Dry	Not Coded
836	0.000	07/12/17	Thu	1607	Rear-End	0	0	1	Day	Dry	Not Coded
837	0.000	07/12/17	Thu	1610	Right-Turn	0	0	1	Day	Wet	Not Coded
838	0.000	07/12/17	Thu	1402	Rear-End	0	0	1	Day	Dry	Not Coded
839	0.000	07/12/17	Thu	1745	Rear-End	0	0	1	Day	Wet	Not Coded
840	0.000	07/13/17	Fri	2255	Angle	0	0	1	Night	Dry	Not Coded
841	0.000	07/13/17	Fri	1621	Rear-End	0	0	1	Day	Dry	Not Coded
842	0.000	07/14/17	Sat	1355	Rear-End	0	0	1	Day	Dry	Not Coded
843	0.000	07/14/17	Sat	1235	Rear-End	0	0	1	Day	Dry	Not Coded
844	0.000	07/14/17	Sat	0817	Angle	0	0	1	Day	Dry	Not Coded
845	0.000	07/14/17	Sat	1734	Backed Into	0	0	1	Day	Dry	Not Coded
846	0.000	07/14/17	Sat	1828	Sideswipe	0	0	1	Day	Dry	Not Coded
847	0.000	07/14/17	Sat	1305	Rear-End	0	0	1	Day	Dry	Not Coded
848	0.000	07/14/17	Sat	1553	Rear-End	0	0	1	Day	Dry	Not Coded
849	0.000	07/14/17	Sat	1710	Head-On	0	0	1	Day	Dry	Not Coded
850	0.000	07/15/17	Sun	1345	Left-Turn	0	0	1	Day	Dry	Not Coded
851	0.000	07/15/17	Sun	1458	Left-Turn	0	0	1	Day	Dry	Not Coded
852	0.000	07/15/17	Sun	1451	Rear-End	0	0	1	Day	Dry	Not Coded
853	0.000	07/15/17	Sun	1153	Sideswipe	0	0	1	Day	Dry	Not Coded
854	0.000	07/16/17	Mon	0040	Rear-End	0	1	0	Night	Dry	Not Coded
855	0.000	07/16/17	Mon	2154	Angle	0	0	1	Night	Wet	Not Coded
856	0.000	07/16/17	Mon	1321	Left-Turn	0	0	1	Day	Dry	Not Coded
857	0.000	07/17/17	Tue	1627	Rear-End	0	0	1	Day	Dry	Not Coded
858	0.000	07/17/17	Tue	1903	Sideswipe	0	1	0	Day	Dry	Not Coded
859	0.000	07/17/17	Tue	1200	Rear-End	0	0	1	Day	Dry	Not Coded
860	0.000	07/17/17	Tue	1315	Rear-End	0	0	1	Day	Dry	Not Coded
861	0.000	07/17/17	Tue	0650	Backed Into	0	0	1	Day	Dry	Not Coded
862	0.000	07/18/17	Wed	0905	Left-Turn	0	0	1	Day	Dry	Not Coded
863	0.000	07/18/17	Wed	1429	Right-Turn	0	0	1	Day	Wet	Not Coded
864	0.000	07/18/17	Wed	0941	Angle	0	0	1	Day	Dry	Not Coded
865	0.000	07/19/17	Thu	2310	Backed Into	0	0	1	Night	Wet	Not Coded
866	0.000	07/19/17	Thu	1903	Rear-End	0	0	1	Day	Dry	Not Coded
867	0.000	07/19/17	Thu	0835	Rear-End	0	0	1	Day	Dry	Not Coded
868	0.000	07/19/17	Thu	1320	Rear-End	0	0	1	Day	Dry	Not Coded
869	0.000	07/19/17	Thu	1500	Angle	0	0	1	Day	Dry	Not Coded
870	0.000	07/19/17	Thu	1347	Left-Turn	0	0	1	Day	Dry	Not Coded
871	0.000	07/19/17	Thu	1745	Rear-End	0	0	1	Night	Dry	Not Coded
872	0.000	07/20/17	Fri	1914	Rear-End	0	0	1	Day	Dry	Not Coded
873	0.000	07/20/17	Fri	2140	Angle	0	1	0	Night	Dry	Not Coded
874	0.000	07/20/17	Fri	2112	Backed Into	0	0	1	Night	Dry	Not Coded
875	0.000	07/20/17	Fri	1720	Angle	0	0	1	Day	Dry	Not Coded
876	0.000	07/20/17	Fri	0840	Angle	0	0	1	Day	Dry	Not Coded
877	0.000	07/21/17	Sat	1010	Angle	0	0	1	Day	Dry	Not Coded
878	0.000	07/21/17	Sat	1540	Angle	0	0	1	Day	Wet	Not Coded
879	0.000	07/22/17	Sun	1825	Rear-End	0	1	0	Day	Dry	Not Coded
880	0.000	07/23/17	Mon	0800	Angle	0	0	1	Day	Dry	Not Coded
881	0.000	07/24/17	Tue	2100	Right-Turn	0	0	1	Night	Dry	Not Coded
882	0.000	07/24/17	Tue	1218	Left-Turn	0	1	0	Day	Dry	Not Coded
883	0.000	07/24/17	Tue	1700	Rear-End	0	0	1	Day	Dry	Not Coded
884	0.000	07/25/17	Wed	1447	Backed Into	0	0	1	Day	Dry	Not Coded
885	0.000	07/25/17	Wed	1021	Sideswipe	0	0	1	Day	Dry	Not Coded
886	0.000	07/25/17	Wed	0825	Left-Turn	0	0	1	Day	Dry	Not Coded
887	0.000	07/26/17	Thu	0802	Right-Turn	0	0	1	Day	Dry	Not Coded
888	0.000	07/26/17	Thu	1214	Angle	0	0	1	Day	Dry	Not Coded
889	0.000	07/27/17	Fri	1623	Right-Turn	0	0	1	Day	Dry	Not Coded
890	0.000	07/27/17	Fri	0914	Rear-End	0	0	1	Day	Dry	Not Coded
891	0.000	07/27/17	Fri	1227	Rear-End	0	0	1	Day	Dry	Not Coded
892	0.000	07/28/17	Sat	1150	Angle	0	0	1	Day	Dry	Not Coded
893	0.000	07/28/17	Sat	1525	Left-Turn	0	0	1	Day	Dry	Not Coded
894	0.000	07/28/17	Sat	1207	Rear-End	0	1	0	Day	Dry	Not Coded
895	0.000	07/30/17	Mon	1520	Rear-End	0	0	1	Day	Dry	Not Coded
896	0.000	07/30/17	Mon	1300	Rear-End	0	0	1	Day	Dry	Not Coded
897	0.000	07/30/17	Mon	1425	Tree (Standing)	0	0	1	Day	Wet	Not Coded

State of Florida Department of Transportation
CRASH SUMMARY

SECTION: Ludlam Trail Corridor f — STATE ROUTE: #N/A
ROADWAY LIMITS: 0 — M.P. 0.000 TO 0.000 — ENGINEER: 0
STUDY PERIOD: FROM 1/ 2017 TO 12/ 2017 — COUNTY: Miami-Dade

No.	MILE POST	DATE	DAY	TIME	CRASH TYPE	FATAL	INJURIES	PROP DAM	DAY / NIGHT	WET / DRY	CONTRIBUTING CAUSE (VEHICLE ONLY)
898	0.000	08/01/17	Wed	1514	Rear-End	0	0	1	Day	Wet	Not Coded
899	0.000	08/01/17	Wed	2018	Sideswipe	0	0	1	Night	Wet	Not Coded
900	0.000	08/01/17	Wed	0827	Angle	0	0	1	Day	Dry	Not Coded
901	0.000	08/01/17	Wed	0855	Rear-End	0	0	1	Day	Dry	Not Coded
902	0.000	08/01/17	Wed	1405	Angle	0	0	1	Day	Wet	Not Coded
903	0.000	08/01/17	Wed	0039	Rear-End	0	0	1	Night	Dry	Not Coded
904	0.000	08/01/17	Wed	0851	Angle	0	1	0	Day	Dry	Not Coded
905	0.000	08/01/17	Wed	1342	Rear-End	0	0	1	Day	Dry	Not Coded
906	0.000	08/02/17	Thu	0930	Sideswipe	0	0	1	Day	Dry	Not Coded
907	0.000	08/02/17	Thu	0825	Rear-End	0	0	1	Day	Dry	Not Coded
908	0.000	08/02/17	Thu	1445	Rear-End	0	0	1	Day	Dry	Not Coded
909	0.000	08/02/17	Thu	1505	Rear-End	0	0	1	Day	Dry	Not Coded
910	0.000	08/02/17	Thu	1440	Sideswipe	0	0	1	Day	Dry	Not Coded
911	0.000	08/02/17	Thu	1212	Tree (Standing)	0	0	1	Day	Dry	Not Coded
912	0.000	08/02/17	Thu	2210	Angle	0	0	1	Night	Dry	Not Coded
913	0.000	08/03/17	Fri	1627	Rear-End	0	0	1	Day	Dry	Not Coded
914	0.000	08/03/17	Fri	0817	Left-Turn	0	0	1	Day	Dry	Not Coded
915	0.000	08/03/17	Fri	1235	Left-Turn	0	0	1	Day	Dry	Not Coded
916	0.000	08/03/17	Fri	1840	Rear-End	0	0	1	Day	Dry	Not Coded
917	0.000	08/03/17	Fri	0834	Rear-End	0	0	1	Day	Dry	Not Coded
918	0.000	08/03/17	Fri	1718	Rear-End	0	0	1	Day	Dry	Not Coded
919	0.000	08/04/17	Sat	0825	Angle	0	1	0	Day	Dry	Not Coded
920	0.000	08/04/17	Sat	1000	Rear-End	0	0	1	Day	Dry	Not Coded
921	0.000	08/04/17	Sat	1443	Left-Turn	0	0	1	Day	Dry	Not Coded
922	0.000	08/04/17	Sat	1229	Rear-End	0	0	1	Day	Dry	Not Coded
923	0.000	08/05/17	Sun	1315	Sideswipe	0	1	0	Day	Dry	Not Coded
924	0.000	08/05/17	Sun	0850	Rear-End	0	0	1	Day	Dry	Not Coded
925	0.000	08/05/17	Sun	1016	Left-Turn	0	0	1	Day	Dry	Not Coded
926	0.000	08/05/17	Sun	2058	Backed Into	0	0	1	Night	Dry	Not Coded
927	0.000	08/05/17	Sun	0936	Sideswipe	0	0	1	Day	Dry	Not Coded
928	0.000	08/05/17	Sun	0535	Rear-End	1	0	0	Night	Dry	Not Coded
929	0.000	08/05/17	Sun	2315	Left-Turn	0	0	1	Night	Dry	Not Coded
930	0.000	08/06/17	Mon	2200	Rear-End	0	0	1	Night	Dry	Not Coded
931	0.000	08/07/17	Tue	1718	Angle	0	0	1	Day	Dry	Not Coded
932	0.000	08/07/17	Tue	1324	Rear-End	0	0	1	Day	Wet	Not Coded
933	0.000	08/08/17	Wed	2345	Rear-End	0	0	1	Night	Dry	Not Coded
934	0.000	08/08/17	Wed	1104	Left-Turn	0	0	1	Day	Dry	Not Coded
935	0.000	08/08/17	Wed	1904	Thrown or Falling Object	0	0	1	Day	Dry	Not Coded
936	0.000	08/08/17	Wed	1820	Rear-End	0	0	1	Day	Dry	Not Coded
937	0.000	08/08/17	Wed	2008	Rear-End	0	0	1	Night	Dry	Not Coded
938	0.000	08/08/17	Wed	2025	Left-Turn	0	0	1	Night	Dry	Not Coded
939	0.000	08/09/17	Thu	1730	Rear-End	0	0	1	Day	Dry	Not Coded
940	0.000	08/09/17	Thu	1744	Parked Motor Vehicle	0	0	1	Day	Dry	Not Coded
941	0.000	08/10/17	Fri	1550	Sideswipe	0	0	1	Day	Dry	Not Coded
942	0.000	08/10/17	Fri	1328	Rear-End	0	0	1	Day	Dry	Not Coded
943	0.000	08/10/17	Fri	1210	Rear-End	0	0	1	Day	Wet	Not Coded
944	0.000	08/11/17	Sat	1355	Rear-End	0	0	1	Day	Wet	Not Coded
945	0.000	08/11/17	Sat	0740	Rear-End	0	0	1	Day	Dry	Not Coded
946	0.000	08/11/17	Sat	1850	Angle	0	1	0	Day	Dry	Not Coded
947	0.000	08/11/17	Sat	1519	Left-Turn	0	0	1	Day	Dry	Not Coded
948	0.000	08/11/17	Sat	1225	Parked Motor Vehicle	0	0	1	Day	Dry	Not Coded
949	0.000	08/12/17	Sun	1540	Angle	0	1	0	Day	Dry	Not Coded
950	0.000	08/12/17	Sun	2240	Angle	0	0	1	Night	Dry	Not Coded
951	0.000	08/13/17	Mon	1510	Right-Turn	0	0	1	Day	Dry	Not Coded
952	0.000	08/13/17	Mon	1604	Parked Motor Vehicle	0	1	0	Day	Dry	Not Coded
953	0.000	08/13/17	Mon	2229	Rear-End	0	0	1	Night	Dry	Not Coded
954	0.000	08/14/17	Tue	1025	Angle	0	0	1	Day	Dry	Not Coded
955	0.000	08/14/17	Tue	0745	Rear-End	0	0	1	Day	Dry	Not Coded
956	0.000	08/14/17	Tue	1822	Rear-End	0	0	1	Day	Dry	Not Coded
957	0.000	08/14/17	Tue	1720	Rear-End	0	1	0	Day	Dry	Not Coded
958	0.000	08/15/17	Wed	1830	Left-Turn	0	0	1	Day	Dry	Not Coded
959	0.000	08/15/17	Wed	1810	Left-Turn	0	0	1	Day	Dry	Not Coded
960	0.000	08/15/17	Wed	1245	Angle	0	0	1	Day	Dry	Not Coded
961	0.000	08/16/17	Thu	1445	Rear-End	0	1	0	Day	Dry	Not Coded
962	0.000	08/16/17	Thu	1744	Rear-End	0	0	1	Day	Dry	Not Coded
963	0.000	08/16/17	Thu	1751	Angle	0	0	1	Day	Dry	Not Coded
964	0.000	08/17/17	Fri	1100	Rear-End	0	0	1	Day	Dry	Not Coded
965	0.000	08/17/17	Fri	1135	Rear-End	0	0	1	Day	Dry	Not Coded
966	0.000	08/17/17	Fri	1855	Not Coded	0	0	1	Day	Dry	Not Coded

State of Florida Department of Transportation
CRASH SUMMARY

SECTION: Ludlam Trail Corridor f — STATE ROUTE: #N/A
ROADWAY LIMITS: 0 — M.P. 0.000 TO 0.000 — ENGINEER: 0
STUDY PERIOD: FROM 1/ 2017 TO 12/ 2017 — COUNTY: Miami-Dade

No.	MILE POST	DATE	DAY	TIME	CRASH TYPE	FATAL	INJURIES	PROP DAM	DAY / NIGHT	WET / DRY	CONTRIBUTING CAUSE (VEHICLE ONLY)
967	0.000	08/17/17	Fri	2247	Rear-End	0	0	1	Night	Dry	Not Coded
968	0.000	08/18/17	Sat	1737	Parked Motor Vehicle	0	0	1	Day	Dry	Not Coded
969	0.000	08/18/17	Sat	1013	Parked Motor Vehicle	0	0	1	Day	Dry	Not Coded
970	0.000	08/18/17	Sat	2353	Left-Turn	0	1	0	Night	Dry	Not Coded
971	0.000	08/18/17	Sat	2036	Rear-End	0	0	1	Day	Dry	Not Coded
972	0.000	08/18/17	Sat	1352	Angle	0	0	1	Day	Dry	Not Coded
973	0.000	08/18/17	Sat	1705	Sideswipe	0	0	1	Day	Dry	Not Coded
974	0.000	08/18/17	Sat	1634	Rear-End	0	0	1	Day	Dry	Not Coded
975	0.000	08/18/17	Sat	1619	Sideswipe	0	1	0	Day	Dry	Not Coded
976	0.000	08/18/17	Sat	2052	Rear-End	0	0	1	Night	Dry	Not Coded
977	0.000	08/18/17	Sat	0910	Rear-End	0	0	1	Day	Dry	Not Coded
978	0.000	08/19/17	Sun	1023	Rear-End	0	0	1	Day	Dry	Not Coded
979	0.000	08/19/17	Sun	1300	Left-Turn	0	1	0	Day	Dry	Not Coded
980	0.000	08/20/17	Mon	1619	Rear-End	0	0	1	Day	Dry	Not Coded
981	0.000	08/20/17	Mon	1724	Rear-End	0	0	1	Day	Dry	Not Coded
982	0.000	08/20/17	Mon	2324	Angle	0	0	1	Night	Dry	Not Coded
983	0.000	08/20/17	Mon	2215	Right-Turn	0	0	1	Night	Dry	Not Coded
984	0.000	08/20/17	Mon	2146	Rear-End	0	0	1	Night	Dry	Not Coded
985	0.000	08/21/17	Tue	1204	Sideswipe	0	0	1	Day	Dry	Not Coded
986	0.000	08/21/17	Tue	0806	Angle	0	1	0	Day	Dry	Not Coded
987	0.000	08/21/17	Tue	0740	Rear-End	0	0	1	Day	Dry	Not Coded
988	0.000	08/22/17	Wed	0940	Sideswipe	0	0	1	Day	Wet	Not Coded
989	0.000	08/22/17	Wed	1624	Rear-End	0	0	1	Day	Dry	Not Coded
990	0.000	08/22/17	Wed	0740	Sideswipe	0	0	1	Day	Dry	Not Coded
991	0.000	08/22/17	Wed	1750	Left-Turn	0	0	1	Day	Dry	Not Coded
992	0.000	08/22/17	Wed	0930	Sideswipe	0	0	1	Day	Dry	Not Coded
993	0.000	08/22/17	Wed	1310	Rear-End	0	0	1	Day	Dry	Not Coded
994	0.000	08/22/17	Wed	1541	Rear-End	0	1	0	Day	Dry	Not Coded
995	0.000	08/22/17	Wed	2000	Left-Turn	0	0	1	Day	Dry	Not Coded
996	0.000	08/23/17	Thu	1040	Angle	0	0	1	Day	Wet	Not Coded
997	0.000	08/23/17	Thu	1300	Rear-End	0	0	1	Day	Wet	Not Coded
998	0.000	08/23/17	Thu	0830	Backed Into	0	0	1	Day	Wet	Not Coded
999	0.000	08/23/17	Thu	1823	Concrete Traffic Barrier	0	0	1	Day	Wet	Not Coded
1000	0.000	08/24/17	Fri	0216	Sideswipe	0	1	0	Night	Wet	Not Coded
1001	0.000	08/24/17	Fri	0932	Rear-End	0	0	1	Day	Wet	Not Coded
1002	0.000	08/24/17	Fri	0005	Sideswipe	0	0	1	Night	Wet	Not Coded
1003	0.000	08/24/17	Fri	1659	Angle	0	0	1	Day	Dry	Not Coded
1004	0.000	08/24/17	Fri	1330	Left-Turn	0	0	1	Day	Wet	Not Coded
1005	0.000	08/24/17	Fri	0720	Rear-End	0	0	1	Day	Dry	Not Coded
1006	0.000	08/25/17	Sat	1652	Rear-End	0	0	1	Day	Dry	Not Coded
1007	0.000	08/25/17	Sat	1751	Angle	0	0	1	Day	Dry	Not Coded
1008	0.000	08/25/17	Sat	1440	Head-On	0	0	1	Day	Wet	Not Coded
1009	0.000	08/25/17	Sat	0930	Left-Turn	0	0	1	Day	Dry	Not Coded
1010	0.000	08/26/17	Sun	1709	Rear-End	0	0	1	Day	Dry	Not Coded
1011	0.000	08/26/17	Sun	1325	Rear-End	0	0	1	Day	Wet	Not Coded
1012	0.000	08/26/17	Sun	1635	Not Coded	0	0	1	Day	Wet	Not Coded
1013	0.000	08/26/17	Sun	1533	Pedestrian	0	0	1	Day	Wet	Not Coded
1014	0.000	08/26/17	Sun	1045	Rear-End	0	1	0	Night	Dry	Not Coded
1015	0.000	08/27/17	Mon	0215	Rear-End	0	1	0	Night	Dry	Not Coded
1016	0.000	08/27/17	Mon	0115	Rear-End	0	0	1	Night	Wet	Not Coded
1017	0.000	08/27/17	Mon	1734	Left-Turn	0	0	1	Day	Wet	Not Coded
1018	0.000	08/28/17	Tue	1317	Fence	0	0	1	Day	Wet	Not Coded
1019	0.000	08/28/17	Tue	0646	Sideswipe	0	1	0	Night	Dry	Not Coded
1020	0.000	08/28/17	Tue	1215	Angle	0	0	1	Day	Dry	Not Coded
1021	0.000	08/28/17	Tue	0802	Sideswipe	0	0	1	Day	Dry	Not Coded
1022	0.000	08/29/17	Wed	1320	Rear-End	0	0	1	Day	Dry	Not Coded
1023	0.000	08/29/17	Wed	1205	Angle	0	1	0	Day	Dry	Not Coded
1024	0.000	08/29/17	Wed	1740	Sideswipe	0	0	1	Day	Dry	Not Coded
1025	0.000	08/29/17	Wed	1845	Angle	0	0	1	Day	Dry	Not Coded
1026	0.000	08/29/17	Wed	1412	Rear-End	0	0	1	Day	Dry	Not Coded
1027	0.000	08/29/17	Wed	1749	Left-Turn	0	0	1	Day	Dry	Not Coded
1028	0.000	08/29/17	Wed	1545	Sideswipe	0	0	1	Day	Dry	Not Coded
1029	0.000	08/30/17	Thu	0804	Sideswipe	0	0	1	Day	Dry	Not Coded
1030	0.000	08/30/17	Thu	1130	Pedalcycle	0	0	1	Day	Dry	Not Coded
1031	0.000	08/31/17	Fri	1843	Rear-End	0	0	1	Day	Dry	Not Coded
1032	0.000	08/31/17	Fri	1710	Backed Into	0	0	1	Day	Dry	Not Coded
1033	0.000	09/01/17	Sat	1903	Angle	0	0	1	Night	Dry	Not Coded
1034	0.000	09/01/17	Sat	1434	Rear-End	0	1	0	Day	Dry	Not Coded
1035	0.000	09/01/17	Sat	1641	Not Coded	0	0	1	Day	Dry	Not Coded

State of Florida Department of Transportation
CRASH SUMMARY

SECTION: Ludlam Trail Corridor f — STATE ROUTE: #N/A
ROADWAY LIMITS: 0 — M.P. 0.000 TO 0.000 — ENGINEER: 0
STUDY PERIOD: FROM 1/ 2017 TO 12/ 2017 — COUNTY: Miami-Dade

No.	MILE POST	DATE	DAY	TIME	CRASH TYPE	FATAL	INJURIES	PROP DAM	DAY / NIGHT	WET / DRY	CONTRIBUTING CAUSE (VEHICLE ONLY)
1036	0.000	09/02/17	Sun	1002	Left-Turn	0	0	1	Day	Dry	Not Coded
1037	0.000	09/03/17	Mon	0000	Parked Motor Vehicle	0	1	0	Night	Dry	Not Coded
1038	0.000	09/03/17	Mon	2215	Sideswipe	0	0	1	Night	Dry	Not Coded
1039	0.000	09/03/17	Mon	2251	Rear-End	0	0	1	Night	Dry	Not Coded
1040	0.000	09/05/17	Wed	0530	Left-Turn	0	1	0	Night	Dry	Not Coded
1041	0.000	09/05/17	Wed	2015	Angle	0	0	1	Night	Dry	Not Coded
1042	0.000	09/05/17	Wed	1330	Rear-End	0	0	1	Day	Dry	Not Coded
1043	0.000	09/05/17	Wed	1015	Rear-End	0	1	0	Day	Dry	Not Coded
1044	0.000	09/05/17	Wed	0950	Sideswipe	0	0	1	Day	Dry	Not Coded
1045	0.000	09/05/17	Wed	1807	Angle	0	0	1	Night	Dry	Not Coded
1046	0.000	09/06/17	Thu	0928	Rear-End	0	0	1	Day	Dry	Not Coded
1047	0.000	09/06/17	Thu	0743	Rear-End	0	0	1	Day	Dry	Not Coded
1048	0.000	09/06/17	Thu	1648	Angle	0	0	1	Day	Dry	Not Coded
1049	0.000	09/06/17	Thu	1450	Rear-End	0	0	1	Day	Dry	Not Coded
1050	0.000	09/06/17	Thu	0840	Rear-End	0	0	1	Day	Wet	Not Coded
1051	0.000	09/06/17	Thu	0910	Sideswipe	0	0	1	Day	Dry	Not Coded
1052	0.000	09/06/17	Thu	1326	Rear-End	0	0	1	Day	Dry	Not Coded
1053	0.000	09/06/17	Thu	1354	Sideswipe	0	0	1	Day	Dry	Not Coded
1054	0.000	09/07/17	Fri	0745	Rear-End	0	0	1	Day	Dry	Not Coded
1055	0.000	09/07/17	Fri	2024	Rear-End	0	0	1	Day	Dry	Not Coded
1056	0.000	09/08/17	Sat	0457	Sideswipe	0	0	1	Night	Dry	Not Coded
1057	0.000	09/08/17	Sat	0325	Sideswipe	0	0	1	Night	Dry	Not Coded
1058	0.000	09/08/17	Sat	0800	Sideswipe	0	0	1	Day	Dry	Not Coded
1059	0.000	09/08/17	Sat	1337	Rear-End	0	0	1	Day	Dry	Not Coded
1060	0.000	09/08/17	Sat	1040	Angle	0	1	0	Day	Dry	Not Coded
1061	0.000	09/11/17	Tue	1700	Left-Turn	0	0	1	Day	Dry	Not Coded
1062	0.000	09/11/17	Tue	1800	Rear-End	0	0	1	Day	Dry	Not Coded
1063	0.000	09/12/17	Wed	0600	Backed Into	0	0	1	Night	Dry	Not Coded
1064	0.000	09/12/17	Wed	1015	Rear-End	0	0	1	Day	Dry	Not Coded
1065	0.000	09/12/17	Wed	1135	Backed Into	0	0	1	Day	Dry	Not Coded
1066	0.000	09/13/17	Thu	0640	Parked Motor Vehicle	0	0	1	Night	Dry	Not Coded
1067	0.000	09/13/17	Thu	0740	Left-Turn	0	0	1	Day	Dry	Not Coded
1068	0.000	09/13/17	Thu	2239	Left-Turn	0	0	1	Night	Dry	Not Coded
1069	0.000	09/13/17	Thu	1916	Rear-End	0	0	1	Night	Dry	Not Coded
1070	0.000	09/13/17	Thu	1153	Head-On	0	0	1	Day	Dry	Not Coded
1071	0.000	09/13/17	Thu	1550	Left-Turn	0	1	0	Day	Dry	Not Coded
1072	0.000	09/13/17	Thu	2348	Angle	0	0	1	Day	Dry	Not Coded
1073	0.000	09/14/17	Fri	1315	Rear-End	0	0	1	Day	Dry	Not Coded
1074	0.000	09/15/17	Sat	1535	Left-Turn	0	0	1	Day	Dry	Not Coded
1075	0.000	09/15/17	Sat	1711	Rear-End	0	0	1	Day	Dry	Not Coded
1076	0.000	09/15/17	Sat	1315	Parked Motor Vehicle	0	0	1	Day	Dry	Not Coded
1077	0.000	09/15/17	Sat	1858	Angle	0	0	1	Day	Dry	Not Coded
1078	0.000	09/16/17	Sun	1515	Rear-End	0	0	1	Day	Dry	Not Coded
1079	0.000	09/16/17	Sun	1211	Rear-End	0	0	1	Day	Dry	Not Coded
1080	0.000	09/16/17	Sun	1454	Angle	0	0	1	Day	Dry	Not Coded
1081	0.000	09/17/17	Mon	0105	Rear-End	0	1	0	Night	Dry	Not Coded
1082	0.000	09/17/17	Mon	0318	Sideswipe	0	0	1	Night	Dry	Not Coded
1083	0.000	09/17/17	Mon	1732	Rear-End	0	0	1	Day	Dry	Not Coded
1084	0.000	09/17/17	Mon	1012	Angle	0	0	1	Day	Dry	Not Coded
1085	0.000	09/17/17	Mon	1830	Rear-End	0	0	1	Day	Dry	Not Coded
1086	0.000	09/17/17	Mon	1529	Rear-End	0	0	1	Day	Dry	Not Coded
1087	0.000	09/18/17	Tue	0730	Sideswipe	0	0	1	Day	Dry	Not Coded
1088	0.000	09/18/17	Tue	1541	Angle	0	0	1	Day	Dry	Not Coded
1089	0.000	09/18/17	Tue	1305	Rear-End	0	0	1	Day	Dry	Not Coded
1090	0.000	09/18/17	Tue	1501	Angle	0	0	1	Day	Dry	Not Coded
1091	0.000	09/18/17	Tue	1222	Rear-End	0	0	1	Day	Dry	Not Coded
1092	0.000	09/18/17	Tue	0814	Sideswipe	0	0	1	Day	Dry	Not Coded
1093	0.000	09/18/17	Tue	0930	Left-Turn	0	0	1	Day	Dry	Not Coded
1094	0.000	09/19/17	Wed	1721	Rear-End	0	0	1	Day	Dry	Not Coded
1095	0.000	09/19/17	Wed	1740	Angle	0	0	1	Day	Dry	Not Coded
1096	0.000	09/19/17	Wed	1510	Rear-End	0	0	1	Day	Dry	Not Coded
1097	0.000	09/19/17	Wed	1508	Rear-End	0	0	1	Day	Dry	Not Coded
1098	0.000	09/19/17	Wed	1000	Sideswipe	0	0	1	Day	Dry	Not Coded
1099	0.000	09/19/17	Wed	1158	Rear-End	0	0	1	Day	Dry	Not Coded
1100	0.000	09/19/17	Wed	1746	Traffic Sign Support	0	0	1	Day	Dry	Not Coded
1101	0.000	09/19/17	Wed	1024	Rear-End	0	0	1	Day	Dry	Not Coded
1102	0.000	09/20/17	Thu	1656	Backed Into	0	0	1	Day	Dry	Not Coded
1103	0.000	09/20/17	Thu	1900	Left-Turn	0	0	1	Night	Dry	Not Coded
1104	0.000	09/20/17	Thu	0843	Sideswipe	0	0	1	Day	Dry	Not Coded

State of Florida Department of Transportation
CRASH SUMMARY

SECTION: Ludlam Trail Corridor f — STATE ROUTE: #N/A
ROADWAY LIMITS: 0 — M.P. 0.000 TO 0.000 — ENGINEER: 0
STUDY PERIOD: FROM 1/ 2017 TO 12/ 2017 — COUNTY: Miami-Dade

No.	MILE POST	DATE	DAY	TIME	CRASH TYPE	FATAL	INJURIES	PROP DAM	DAY / NIGHT	WET / DRY	CONTRIBUTING CAUSE (VEHICLE ONLY)
1105	0.000	09/20/17	Thu	1325	Right-Turn	0	0	1	Day	Dry	Not Coded
1106	0.000	09/20/17	Thu	1312	Angle	0	0	1	Day	Dry	Not Coded
1107	0.000	09/20/17	Thu	1800	Rear-End	0	0	1	Day	Dry	Not Coded
1108	0.000	09/20/17	Thu	1959	Sideswipe	0	0	1	Night	Dry	Not Coded
1109	0.000	09/20/17	Thu	1528	Left-Turn	0	0	1	Day	Dry	Not Coded
1110	0.000	09/20/17	Thu	0636	Rear-End	0	0	1	Day	Dry	Not Coded
1111	0.000	09/20/17	Thu	0630	Rear-End	0	0	1	Day	Dry	Not Coded
1112	0.000	09/20/17	Thu	0948	Rear-End	0	0	1	Day	Dry	Not Coded
1113	0.000	09/21/17	Fri	1748	Rear-End	0	0	1	Day	Dry	Not Coded
1114	0.000	09/22/17	Sat	1230	Rear-End	0	1	0	Day	Wet	Not Coded
1115	0.000	09/22/17	Sat	1515	Left-Turn	0	0	1	Day	Dry	Not Coded
1116	0.000	09/22/17	Sat	1703	Rear-End	0	0	1	Day	Dry	Not Coded
1117	0.000	09/22/17	Sat	1059	Rear-End	0	0	1	Day	Dry	Not Coded
1118	0.000	09/23/17	Sun	1005	Right-Turn	0	0	1	Day	Dry	Not Coded
1119	0.000	09/23/17	Sun	1810	Sideswipe	0	1	0	Day	Dry	Not Coded
1120	0.000	09/23/17	Sun	1540	Not Coded	0	1	0	Day	Dry	Not Coded
1121	0.000	09/23/17	Sun	1620	Rear-End	0	0	1	Day	Dry	Not Coded
1122	0.000	09/24/17	Mon	1138	Left-Turn	0	0	1	Day	Dry	Not Coded
1123	0.000	09/24/17	Mon	0200	Rear-End	0	0	1	Night	Dry	Not Coded
1124	0.000	09/24/17	Mon	0030	Rear-End	0	0	1	Night	Dry	Not Coded
1125	0.000	09/25/17	Tue	0943	Left-Turn	0	0	1	Day	Dry	Not Coded
1126	0.000	09/25/17	Tue	1825	Backed Into	0	0	1	Day	Dry	Not Coded
1127	0.000	09/25/17	Tue	1600	Angle	0	1	0	Day	Dry	Not Coded
1128	0.000	09/25/17	Tue	1848	Left-Turn	0	0	1	Day	Dry	Not Coded
1129	0.000	09/25/17	Tue	1740	Left-Turn	0	0	1	Day	Dry	Not Coded
1130	0.000	09/26/17	Wed	1756	Rear-End	0	0	1	Day	Dry	Not Coded
1131	0.000	09/26/17	Wed	0830	Rear-End	0	0	1	Day	Wet	Not Coded
1132	0.000	09/26/17	Wed	1417	Angle	0	0	1	Day	Dry	Not Coded
1133	0.000	09/26/17	Wed	0825	Rear-End	0	0	1	Day	Wet	Not Coded
1134	0.000	09/26/17	Wed	1117	Sideswipe	0	0	1	Day	Dry	Not Coded
1135	0.000	09/26/17	Wed	0700	Rear-End	0	0	1	Day	Wet	Not Coded
1136	0.000	09/27/17	Thu	1340	Right-Turn	0	1	0	Day	Dry	Not Coded
1137	0.000	09/27/17	Thu	1250	Sideswipe	0	0	1	Day	Dry	Not Coded
1138	0.000	09/27/17	Thu	1002	Sideswipe	0	1	0	Day	Dry	Not Coded
1139	0.000	09/27/17	Thu	1420	Rear-End	0	0	1	Day	Dry	Not Coded
1140	0.000	09/28/17	Fri	0910	Rear-End	0	0	1	Day	Dry	Not Coded
1141	0.000	09/28/17	Fri	0710	Sideswipe	0	0	1	Day	Wet	Not Coded
1142	0.000	09/28/17	Fri	1649	Rear-End	0	0	1	Day	Dry	Not Coded
1143	0.000	09/28/17	Fri	1402	Rear-End	0	0	1	Day	Dry	Not Coded
1144	0.000	09/28/17	Fri	1930	Not Coded	0	0	1	Night	Dry	Not Coded
1145	0.000	09/28/17	Fri	1413	Backed Into	0	0	1	Day	Dry	Not Coded
1146	0.000	09/28/17	Fri	1521	Rear-End	0	0	1	Day	Dry	Not Coded
1147	0.000	09/28/17	Fri	1835	Rear-End	0	0	1	Day	Dry	Not Coded
1148	0.000	09/29/17	Sat	1750	Rear-End	0	1	0	Day	Dry	Not Coded
1149	0.000	09/29/17	Sat	0930	Rear-End	0	0	1	Day	Dry	Not Coded
1150	0.000	09/29/17	Sat	1600	Sideswipe	0	0	1	Day	Wet	Not Coded
1151	0.000	09/30/17	Sun	1207	Sideswipe	0	0	1	Day	Dry	Not Coded
1152	0.000	09/30/17	Sun	2100	Left-Turn	0	0	1	Day	Dry	Not Coded
1153	0.000	09/30/17	Sun	1503	Rear-End	0	0	1	Day	Dry	Not Coded
1154	0.000	09/30/17	Sun	1226	Rear-End	0	0	1	Day	Dry	Not Coded
1155	0.000	10/01/17	Mon	1425	Rear-End	0	0	1	Day	Dry	Not Coded
1156	0.000	10/01/17	Mon	2000	Pedestrian	0	0	1	Night	Dry	Not Coded
1157	0.000	10/01/17	Mon	1610	Rear-End	0	0	1	Day	Dry	Not Coded
1158	0.000	10/02/17	Tue	0845	Backed Into	0	1	0	Day	Dry	Not Coded
1159	0.000	10/02/17	Tue	2130	Rear-End	0	0	1	Night	Dry	Not Coded
1160	0.000	10/02/17	Tue	1404	Rear-End	0	0	1	Day	Dry	Not Coded
1161	0.000	10/02/17	Tue	1545	Backed Into	0	0	1	Day	Dry	Not Coded
1162	0.000	10/02/17	Tue	0940	Left-Turn	0	0	1	Day	Wet	Not Coded
1163	0.000	10/02/17	Tue	1457	Rear-End	0	0	1	Day	Wet	Not Coded
1164	0.000	10/03/17	Wed	1559	Left-Turn	0	0	1	Day	Dry	Not Coded
1165	0.000	10/03/17	Wed	1302	Sideswipe	0	0	1	Day	Dry	Not Coded
1166	0.000	10/03/17	Wed	1802	Angle	0	1	0	Day	Dry	Not Coded
1167	0.000	10/03/17	Wed	1847	Left-Turn	0	0	1	Night	Dry	Not Coded
1168	0.000	10/03/17	Wed	1700	Sideswipe	0	0	1	Day	Dry	Not Coded
1169	0.000	10/03/17	Wed	2045	Rear-End	0	0	1	Night	Wet	Not Coded
1170	0.000	10/03/17	Wed	0838	Angle	0	0	1	Day	Dry	Not Coded
1171	0.000	10/03/17	Wed	0729	Angle	0	0	1	Day	Dry	Not Coded
1172	0.000	10/04/17	Thu	1000	Rear-End	0	0	1	Day	Wet	Not Coded
1173	0.000	10/04/17	Thu	1130	Angle	0	0	1	Day	Dry	Not Coded

State of Florida Department of Transportation
CRASH SUMMARY

SECTION: Ludlam Trail Corridor f — STATE ROUTE: #N/A
ROADWAY LIMITS: 0 — M.P. 0.000 TO 0.000 — ENGINEER: 0
STUDY PERIOD: FROM 1/ 2017 TO 12/ 2017 — COUNTY: Miami-Dade

No.	MILE POST	DATE	DAY	TIME	CRASH TYPE	FATAL	INJURIES	PROP DAM	DAY / NIGHT	WET / DRY	CONTRIBUTING CAUSE (VEHICLE ONLY)
1174	0.000	10/04/17	Thu	1808	Sideswipe	0	0	1	Day	Wet	Not Coded
1175	0.000	10/04/17	Thu	0153	Sideswipe	0	0	1	Night	Wet	Not Coded
1176	0.000	10/04/17	Thu	1010	Angle	0	0	1	Day	Wet	Not Coded
1177	0.000	10/05/17	Fri	1954	Angle	0	0	1	Night	Dry	Not Coded
1178	0.000	10/05/17	Fri	0137	Left-Turn	0	0	1	Night	Wet	Not Coded
1179	0.000	10/05/17	Fri	0600	Angle	0	0	1	Night	Wet	Not Coded
1180	0.000	10/05/17	Fri	1020	Rear-End	0	0	1	Day	Wet	Not Coded
1181	0.000	10/05/17	Fri	0700	Sideswipe	0	0	1	Day	Wet	Not Coded
1182	0.000	10/05/17	Fri	1410	Rear-End	0	0	1	Day	Dry	Not Coded
1183	0.000	10/05/17	Fri	1230	Right-Turn	0	0	1	Day	Wet	Not Coded
1184	0.000	10/05/17	Fri	2215	Rear-End	0	0	1	Night	Dry	Not Coded
1185	0.000	10/05/17	Fri	0848	Parked Motor Vehicle	0	0	1	Day	Wet	Not Coded
1186	0.000	10/05/17	Fri	0903	Backed Into	0	0	1	Unknown	Dry	Not Coded
1187	0.000	10/05/17	Fri	1945	Rear-End	0	0	1	Night	Dry	Not Coded
1188	0.000	10/06/17	Sat	1646	Rear-End	0	0	1	Day	Dry	Not Coded
1189	0.000	10/06/17	Sat	0900	Left-Turn	0	0	1	Day	Dry	Not Coded
1190	0.000	10/06/17	Sat	1825	Sideswipe	0	0	1	Day	Dry	Not Coded
1191	0.000	10/06/17	Sat	2250	Sideswipe	0	0	1	Night	Dry	Not Coded
1192	0.000	10/06/17	Sat	0815	Sideswipe	0	0	1	Day	Dry	Not Coded
1193	0.000	10/07/17	Sun	1520	Sideswipe	0	0	1	Day	Dry	Not Coded
1194	0.000	10/07/17	Sun	1355	Rear-End	0	1	0	Day	Dry	Not Coded
1195	0.000	10/09/17	Tue	0700	Rear-End	0	0	1	Day	Wet	Not Coded
1196	0.000	10/09/17	Tue	1708	Angle	0	0	1	Day	Dry	Not Coded
1197	0.000	10/09/17	Tue	1615	Angle	0	0	1	Day	Dry	Not Coded
1198	0.000	10/09/17	Tue	1138	Guardrail End	0	0	1	Day	Dry	Not Coded
1199	0.000	10/09/17	Tue	1722	Rear-End	0	0	1	Day	Dry	Not Coded
1200	0.000	10/09/17	Tue	0805	Angle	0	0	1	Day	Dry	Not Coded
1201	0.000	10/10/17	Wed	1445	Sideswipe	0	0	1	Day	Dry	Not Coded
1202	0.000	10/10/17	Wed	1244	Angle	0	0	1	Day	Dry	Not Coded
1203	0.000	10/10/17	Wed	1927	Sideswipe	0	0	1	Day	Dry	Not Coded
1204	0.000	10/10/17	Wed	0454	Right-Turn	0	0	1	Night	Dry	Not Coded
1205	0.000	10/10/17	Wed	1726	Angle	0	1	0	Day	Dry	Not Coded
1206	0.000	10/10/17	Wed	1255	Rear-End	0	0	1	Day	Dry	Not Coded
1207	0.000	10/10/17	Wed	1922	Rear-End	0	0	1	Night	Dry	Not Coded
1208	0.000	10/10/17	Wed	2009	Rear-End	0	0	1	Night	Dry	Not Coded
1209	0.000	10/11/17	Thu	1422	Rear-End	0	0	1	Day	Dry	Not Coded
1210	0.000	10/11/17	Thu	1928	Backed Into	0	0	1	Day	Dry	Not Coded
1211	0.000	10/11/17	Thu	0925	Rear-End	0	0	1	Day	Dry	Not Coded
1212	0.000	10/12/17	Fri	1235	Rear-End	0	0	1	Day	Wet	Not Coded
1213	0.000	10/12/17	Fri	1640	Rear-End	0	1	0	Day	Dry	Not Coded
1214	0.000	10/12/17	Fri	1234	Head-On	0	1	0	Day	Wet	Not Coded
1215	0.000	10/12/17	Fri	0718	Not Coded	0	0	1	Night	Wet	Not Coded
1216	0.000	10/12/17	Fri	2155	Angle	0	0	1	Night	Wet	Not Coded
1217	0.000	10/13/17	Sat	1630	Left-Turn	0	0	1	Day	Dry	Not Coded
1218	0.000	10/13/17	Sat	1300	Angle	0	0	1	Day	Dry	Not Coded
1219	0.000	10/13/17	Sat	1800	Rear-End	0	0	1	Day	Dry	Not Coded
1220	0.000	10/13/17	Sat	1825	Left-Turn	0	0	1	Day	Dry	Not Coded
1221	0.000	10/13/17	Sat	1431	Left-Turn	0	0	1	Day	Dry	Not Coded
1222	0.000	10/14/17	Sun	1150	Rear-End	0	0	1	Day	Dry	Not Coded
1223	0.000	10/14/17	Sun	1310	Not Coded	0	0	1	Day	Dry	Not Coded
1224	0.000	10/14/17	Sun	1145	Rear-End	0	0	1	Day	Dry	Not Coded
1225	0.000	10/14/17	Sun	1830	Rear-End	0	0	1	Day	Dry	Not Coded
1226	0.000	10/14/17	Sun	2148	Sideswipe	0	0	1	Night	Dry	Not Coded
1227	0.000	10/15/17	Mon	1633	Rear-End	0	0	1	Day	Dry	Not Coded
1228	0.000	10/16/17	Tue	1455	Concrete Traffic Barrier	0	0	1	Day	Dry	Not Coded
1229	0.000	10/16/17	Tue	1532	Rear-End	0	0	1	Day	Wet	Not Coded
1230	0.000	10/16/17	Tue	1254	Rear-End	0	1	0	Day	Wet	Not Coded
1231	0.000	10/16/17	Tue	1315	Sideswipe	0	1	0	Day	Wet	Not Coded
1232	0.000	10/16/17	Tue	0935	Rear-End	0	0	1	Day	Dry	Not Coded
1233	0.000	10/16/17	Tue	1632	Rear-End	0	0	1	Day	Dry	Not Coded
1234	0.000	10/16/17	Tue	1454	Sideswipe	0	0	1	Day	Wet	Not Coded
1235	0.000	10/16/17	Tue	2330	Rear-End	0	0	1	Night	Dry	Not Coded
1236	0.000	10/16/17	Tue	2120	Right-Turn	0	0	1	Night	Dry	Not Coded
1237	0.000	10/16/17	Tue	0620	Angle	0	0	1	Night	Dry	Not Coded
1238	0.000	10/17/17	Wed	0900	Left-Turn	0	0	1	Day	Dry	Not Coded
1239	0.000	10/17/17	Wed	1335	Rear-End	0	1	0	Day	Dry	Not Coded
1240	0.000	10/17/17	Wed	1320	Angle	0	0	1	Day	Dry	Not Coded
1241	0.000	10/17/17	Wed	1420	Rear-End	0	0	1	Day	Dry	Not Coded
1242	0.000	10/17/17	Wed	1730	Left-Turn	0	0	1	Day	Dry	Not Coded

State of Florida Department of Transportation
CRASH SUMMARY

SECTION: Ludlam Trail Corridor f — STATE ROUTE: #N/A
ROADWAY LIMITS: 0 — M.P. 0.000 TO 0.000 — ENGINEER: 0
STUDY PERIOD: FROM 1/ 2017 TO 12/ 2017 — COUNTY: Miami-Dade

No.	MILE POST	DATE	DAY	TIME	CRASH TYPE	FATAL	INJURIES	PROP DAM	DAY / NIGHT	WET / DRY	CONTRIBUTING CAUSE (VEHICLE ONLY)
1243	0.000	10/17/17	Wed	1140	Left-Turn	0	0	1	Day	Dry	Not Coded
1244	0.000	10/17/17	Wed	1408	Angle	0	0	1	Day	Dry	Not Coded
1245	0.000	10/17/17	Wed	0755	Backed Into	0	0	1	Day	Dry	Not Coded
1246	0.000	10/17/17	Wed	2130	Rear-End	0	0	1	Night	Dry	Not Coded
1247	0.000	10/18/17	Thu	0000	Rear-End	0	1	0	Night	Dry	Not Coded
1248	0.000	10/18/17	Thu	1700	Rear-End	0	0	1	Day	Dry	Not Coded
1249	0.000	10/18/17	Thu	0828	Left-Turn	0	0	1	Day	Dry	Not Coded
1250	0.000	10/18/17	Thu	1555	Rear-End	0	0	1	Day	Dry	Not Coded
1251	0.000	10/18/17	Thu	0808	Rear-End	0	0	1	Day	Dry	Not Coded
1252	0.000	10/18/17	Thu	1702	Rear-End	0	0	1	Day	Dry	Not Coded
1253	0.000	10/18/17	Thu	1500	Rear-End	0	0	1	Day	Dry	Not Coded
1254	0.000	10/18/17	Thu	1350	Not Coded	0	0	1	Day	Dry	Not Coded
1255	0.000	10/18/17	Thu	1415	Rear-End	0	0	1	Day	Dry	Not Coded
1256	0.000	10/19/17	Fri	1100	Parked Motor Vehicle	0	0	1	Day	Wet	Not Coded
1257	0.000	10/19/17	Fri	2017	Sideswipe	0	1	0	Night	Dry	Not Coded
1258	0.000	10/19/17	Fri	1105	Left-Turn	0	0	1	Day	Dry	Not Coded
1259	0.000	10/19/17	Fri	1425	Rear-End	0	0	1	Day	Dry	Not Coded
1260	0.000	10/19/17	Fri	1527	Rear-End	0	0	1	Day	Dry	Not Coded
1261	0.000	10/19/17	Fri	1355	Left-Turn	0	0	1	Day	Dry	Not Coded
1262	0.000	10/19/17	Fri	0630	Head-On	0	0	1	Night	Dry	Not Coded
1263	0.000	10/19/17	Fri	1429	Rear-End	0	1	0	Day	Dry	Not Coded
1264	0.000	10/20/17	Sat	1500	Angle	0	0	1	Day	Dry	Not Coded
1265	0.000	10/20/17	Sat	1235	Tree (Standing)	0	0	1	Day	Dry	Not Coded
1266	0.000	10/20/17	Sat	1638	Sideswipe	0	0	1	Day	Dry	Not Coded
1267	0.000	10/20/17	Sat	2013	Left-Turn	0	1	0	Day	Wet	Not Coded
1268	0.000	10/20/17	Sat	1650	Angle	0	0	1	Day	Dry	Not Coded
1269	0.000	10/20/17	Sat	0930	Rear-End	0	0	1	Day	Dry	Not Coded
1270	0.000	10/21/17	Sun	1430	Sideswipe	0	0	1	Day	Dry	Not Coded
1271	0.000	10/21/17	Sun	0845	Sideswipe	0	0	1	Day	Wet	Not Coded
1272	0.000	10/21/17	Sun	0758	Rear-End	0	1	0	Day	Dry	Not Coded
1273	0.000	10/21/17	Sun	1010	Rear-End	0	0	1	Day	Dry	Not Coded
1274	0.000	10/21/17	Sun	1940	Backed Into	0	0	1	Day	Dry	Not Coded
1275	0.000	10/21/17	Sun	0847	Rear-End	0	0	1	Day	Wet	Not Coded
1276	0.000	10/23/17	Tue	1138	Angle	0	0	1	Day	Dry	Not Coded
1277	0.000	10/23/17	Tue	1615	Rear-End	0	0	1	Day	Dry	Not Coded
1278	0.000	10/23/17	Tue	1955	Angle	0	0	1	Night	Dry	Not Coded
1279	0.000	10/23/17	Tue	1124	Sideswipe	0	0	1	Day	Dry	Not Coded
1280	0.000	10/23/17	Tue	1835	Left-Turn	0	0	1	Day	Dry	Not Coded
1281	0.000	10/23/17	Tue	1635	Rear-End	0	0	1	Day	Dry	Not Coded
1282	0.000	10/24/17	Wed	0615	Sideswipe	0	0	1	Night	Dry	Not Coded
1283	0.000	10/24/17	Wed	2220	Angle	0	0	1	Night	Wet	Not Coded
1284	0.000	10/24/17	Wed	0759	Sideswipe	0	0	1	Day	Dry	Not Coded
1285	0.000	10/24/17	Wed	0706	Rear-End	0	0	1	Day	Dry	Not Coded
1286	0.000	10/24/17	Wed	1843	Left-Turn	0	0	1	Day	Wet	Not Coded
1287	0.000	10/24/17	Wed	1351	Rear-End	0	0	1	Day	Dry	Not Coded
1288	0.000	10/24/17	Wed	1335	Rear-End	0	1	0	Day	Dry	Not Coded
1289	0.000	10/24/17	Wed	1110	Rear-End	0	0	1	Day	Dry	Not Coded
1290	0.000	10/24/17	Wed	1520	Rear-End	0	1	0	Day	Wet	Not Coded
1291	0.000	10/24/17	Wed	1813	Sideswipe	0	0	1	Day	Dry	Not Coded
1292	0.000	10/24/17	Wed	2125	Pedestrian	0	0	1	Night	Wet	Not Coded
1293	0.000	10/24/17	Wed	1048	Sideswipe	0	0	1	Day	Dry	Not Coded
1294	0.000	10/24/17	Wed	1757	Rear-End	0	0	1	Night	Wet	Not Coded
1295	0.000	10/25/17	Thu	1721	Left-Turn	0	1	0	Day	Dry	Not Coded
1296	0.000	10/25/17	Thu	1819	Rear-End	0	0	1	Night	Dry	Not Coded
1297	0.000	10/25/17	Thu	1943	Left-Turn	0	0	1	Night	Dry	Not Coded
1298	0.000	10/26/17	Fri	1730	Overturn/Rollover	0	0	1	Day	Dry	Not Coded
1299	0.000	10/26/17	Fri	1817	Rear-End	0	0	1	Day	Dry	Not Coded
1300	0.000	10/26/17	Fri	0830	Rear-End	0	0	1	Day	Dry	Not Coded
1301	0.000	10/26/17	Fri	1000	Angle	0	0	1	Day	Dry	Not Coded
1302	0.000	10/27/17	Sat	1446	Sideswipe	0	0	1	Day	Dry	Not Coded
1303	0.000	10/27/17	Sat	0901	Angle	0	0	1	Day	Dry	Not Coded
1304	0.000	10/27/17	Sat	1051	Rear-End	0	0	1	Day	Dry	Not Coded
1305	0.000	10/27/17	Sat	1440	Rear-End	0	0	1	Day	Dry	Not Coded
1306	0.000	10/27/17	Sat	2023	Backed Into	0	1	0	Night	Dry	Not Coded
1307	0.000	10/28/17	Sun	2104	Rear-End	0	0	1	Night	Wet	Not Coded
1308	0.000	10/28/17	Sun	1855	Rear-End	0	0	1	Night	Wet	Not Coded
1309	0.000	10/28/17	Sun	1214	Rear-End	0	0	1	Day	Wet	Not Coded
1310	0.000	10/28/17	Sun	1239	Backed Into	0	0	1	Day	Wet	Not Coded
1311	0.000	10/28/17	Sun	1155	Angle	0	0	1	Day	Wet	Not Coded

State of Florida Department of Transportation
CRASH SUMMARY

SECTION: Ludlam Trail Corridor f — STATE ROUTE: #N/A
ROADWAY LIMITS: 0 — M.P. 0.000 TO 0.000 — ENGINEER: 0
STUDY PERIOD: FROM 1/ 2017 TO 12/ 2017 — COUNTY: Miami-Dade

No.	MILE POST	DATE	DAY	TIME	CRASH TYPE	FATAL	INJURIES	PROP DAM	DAY / NIGHT	WET / DRY	CONTRIBUTING CAUSE (VEHICLE ONLY)
1312	0.000	10/29/17	Mon	0420	Right-Turn	0	0	1	Night	Wet	Not Coded
1313	0.000	10/30/17	Tue	1925	Rear-End	0	0	1	Night	Dry	Not Coded
1314	0.000	10/30/17	Tue	1908	Rear-End	0	0	1	Night	Dry	Not Coded
1315	0.000	10/30/17	Tue	0930	Rear-End	0	0	1	Day	Dry	Not Coded
1316	0.000	10/31/17	Wed	1743	Backed Into	0	0	1	Day	Dry	Not Coded
1317	0.000	10/31/17	Wed	1030	Angle	0	0	1	Day	Dry	Not Coded
1318	0.000	10/31/17	Wed	1515	Rear-End	0	0	1	Day	Dry	Not Coded
1319	0.000	10/31/17	Wed	1905	Angle	0	1	0	Night	Dry	Not Coded
1320	0.000	10/31/17	Wed	2225	Rear-End	0	0	1	Night	Dry	Not Coded
1321	0.000	10/31/17	Wed	1956	Angle	0	0	1	Night	Dry	Not Coded
1322	0.000	10/31/17	Wed	1550	Rear-End	0	1	0	Day	Dry	Not Coded
1323	0.000	10/31/17	Wed	1242	Backed Into	0	0	1	Day	Dry	Not Coded
1324	0.000	11/01/17	Thu	1711	Angle	0	0	1	Day	Dry	Not Coded
1325	0.000	11/01/17	Thu	1731	Rear-End	0	0	1	Day	Dry	Not Coded
1326	0.000	11/01/17	Thu	1145	Angle	0	0	1	Day	Dry	Not Coded
1327	0.000	11/01/17	Thu	0934	Sideswipe	0	0	1	Day	Dry	Not Coded
1328	0.000	11/02/17	Fri	1824	Sideswipe	0	0	1	Day	Dry	Not Coded
1329	0.000	11/02/17	Fri	1800	Angle	0	0	1	Night	Dry	Not Coded
1330	0.000	11/02/17	Fri	1058	Angle	0	0	1	Day	Dry	Not Coded
1331	0.000	11/02/17	Fri	0930	Rear-End	0	0	1	Day	Dry	Not Coded
1332	0.000	11/02/17	Fri	1644	Left-Turn	0	0	1	Day	Dry	Not Coded
1333	0.000	11/03/17	Sat	2345	Sideswipe	0	0	1	Night	Wet	Not Coded
1334	0.000	11/03/17	Sat	1355	Pedestrian	0	0	1	Day	Dry	Not Coded
1335	0.000	11/03/17	Sat	1235	Angle	0	0	1	Day	Dry	Not Coded
1336	0.000	11/04/17	Sun	2025	Angle	0	0	1	Night	Dry	Not Coded
1337	0.000	11/04/17	Sun	1033	Other Fixed Object	0	0	1	Day	Dry	Not Coded
1338	0.000	11/04/17	Sun	2300	Rear-End	0	0	1	Night	Dry	Not Coded
1339	0.000	11/04/17	Sun	0016	Sideswipe	0	0	1	Night	Wet	Not Coded
1340	0.000	11/04/17	Sun	1425	Sideswipe	0	0	1	Day	Dry	Not Coded
1341	0.000	11/06/17	Tue	1838	Rear-End	0	0	1	Night	Dry	Not Coded
1342	0.000	11/06/17	Tue	0850	Sideswipe	0	0	1	Day	Dry	Not Coded
1343	0.000	11/06/17	Tue	0419	Left-Turn	1	0	0	Night	Dry	Not Coded
1344	0.000	11/06/17	Tue	1506	Angle	0	0	1	Day	Dry	Not Coded
1345	0.000	11/06/17	Tue	0915	Angle	0	0	1	Day	Dry	Not Coded
1346	0.000	11/06/17	Tue	1255	Angle	0	0	1	Day	Dry	Not Coded
1347	0.000	11/07/17	Wed	0948	Rear-End	0	0	1	Day	Dry	Not Coded
1348	0.000	11/07/17	Wed	1817	Angle	0	0	1	Night	Dry	Not Coded
1349	0.000	11/07/17	Wed	1834	Right-Turn	0	0	1	Night	Dry	Not Coded
1350	0.000	11/07/17	Wed	1842	Angle	0	0	1	Night	Dry	Not Coded
1351	0.000	11/07/17	Wed	0744	Left-Turn	0	0	1	Day	Dry	Not Coded
1352	0.000	11/07/17	Wed	1100	Rear-End	0	0	1	Day	Dry	Not Coded
1353	0.000	11/07/17	Wed	1755	Angle	0	0	1	Night	Dry	Not Coded
1354	0.000	11/08/17	Thu	1650	Head-On	0	1	0	Day	Dry	Not Coded
1355	0.000	11/08/17	Thu	1236	Rear-End	0	0	1	Day	Dry	Not Coded
1356	0.000	11/08/17	Thu	0833	Rear-End	0	0	1	Day	Dry	Not Coded
1357	0.000	11/08/17	Thu	1900	Left-Turn	0	0	1	Day	Dry	Not Coded
1358	0.000	11/08/17	Thu	1316	Left-Turn	0	0	1	Day	Dry	Not Coded
1359	0.000	11/08/17	Thu	0915	Tree (Standing)	0	0	1	Day	Dry	Not Coded
1360	0.000	11/08/17	Thu	1515	Sideswipe	0	0	1	Day	Dry	Not Coded
1361	0.000	11/08/17	Thu	1630	Rear-End	0	0	1	Day	Dry	Not Coded
1362	0.000	11/08/17	Thu	1300	Sideswipe	0	0	1	Day	Dry	Not Coded
1363	0.000	11/09/17	Fri	2300	Angle	0	1	0	Night	Dry	Not Coded
1364	0.000	11/09/17	Fri	1144	Parked Motor Vehicle	0	0	1	Day	Dry	Not Coded
1365	0.000	11/09/17	Fri	0816	Rear-End	0	1	0	Day	Dry	Not Coded
1366	0.000	11/10/17	Sat	1340	Angle	0	0	1	Day	Dry	Not Coded
1367	0.000	11/10/17	Sat	1459	Backed Into	0	0	1	Day	Dry	Not Coded
1368	0.000	11/10/17	Sat	1225	Rear-End	0	0	1	Day	Dry	Not Coded
1369	0.000	11/10/17	Sat	1800	Rear-End	0	0	1	Night	Dry	Not Coded
1370	0.000	11/10/17	Sat	1518	Rear-End	0	0	1	Day	Dry	Not Coded
1371	0.000	11/10/17	Sat	1035	Tree (Standing)	0	0	1	Day	Dry	Not Coded
1372	0.000	11/11/17	Sun	1110	Left-Turn	0	0	1	Day	Dry	Not Coded
1373	0.000	11/11/17	Sun	1234	Backed Into	0	0	1	Day	Dry	Not Coded
1374	0.000	11/11/17	Sun	1940	Rear-End	0	0	1	Night	Dry	Not Coded
1375	0.000	11/11/17	Sun	1350	Rear-End	0	0	1	Day	Dry	Not Coded
1376	0.000	11/12/17	Mon	1648	Sideswipe	0	0	1	Day	Dry	Not Coded
1377	0.000	11/12/17	Mon	1631	Sideswipe	0	0	1	Day	Dry	Not Coded
1378	0.000	11/12/17	Mon	0607	Angle	0	0	1	Night	Dry	Not Coded
1379	0.000	11/12/17	Mon	0058	Angle	0	1	0	Night	Dry	Not Coded
1380	0.000	11/13/17	Tue	0745	Angle	0	0	1	Day	Wet	Not Coded

State of Florida Department of Transportation
CRASH SUMMARY

SECTION: Ludlam Trail Corridor f — STATE ROUTE: #N/A
ROADWAY LIMITS: 0 — M.P. 0.000 TO 0.000 — ENGINEER: 0
STUDY PERIOD: FROM 1/ 2017 TO 12/ 2017 — COUNTY: Miami-Dade

No.	MILE POST	DATE	DAY	TIME	CRASH TYPE	FATAL	INJURIES	PROP DAM	DAY / NIGHT	WET / DRY	CONTRIBUTING CAUSE (VEHICLE ONLY)
1381	0.000	11/13/17	Tue	2255	Left-Turn	0	0	1	Night	Wet	Not Coded
1382	0.000	11/13/17	Tue	1859	Sideswipe	0	0	1	Night	Dry	Not Coded
1383	0.000	11/13/17	Tue	0915	Rear-End	0	0	1	Day	Dry	Not Coded
1384	0.000	11/13/17	Tue	0938	Utility Pole/Light Support	0	0	1	Day	Dry	Not Coded
1385	0.000	11/14/17	Wed	1400	Left-Turn	0	0	1	Day	Dry	Not Coded
1386	0.000	11/14/17	Wed	1238	Angle	0	0	1	Day	Dry	Not Coded
1387	0.000	11/14/17	Wed	0900	Sideswipe	0	0	1	Day	Dry	Not Coded
1388	0.000	11/14/17	Wed	1800	Rear-End	0	0	1	Day	Dry	Not Coded
1389	0.000	11/14/17	Wed	1220	Parked Motor Vehicle	0	0	1	Day	Dry	Not Coded
1390	0.000	11/14/17	Wed	1900	Angle	0	0	1	Night	Dry	Not Coded
1391	0.000	11/14/17	Wed	0930	Sideswipe	0	0	1	Day	Dry	Not Coded
1392	0.000	11/14/17	Wed	1012	Rear-End	0	0	1	Day	Dry	Not Coded
1393	0.000	11/14/17	Wed	1752	Backed Into	0	0	1	Night	Dry	Not Coded
1394	0.000	11/15/17	Thu	1722	Left-Turn	0	0	1	Day	Dry	Not Coded
1395	0.000	11/15/17	Thu	1750	Rear-End	0	0	1	Night	Dry	Not Coded
1396	0.000	11/15/17	Thu	1326	Rear-End	0	0	1	Day	Wet	Not Coded
1397	0.000	11/15/17	Thu	1841	Rear-End	0	0	1	Night	Wet	Not Coded
1398	0.000	11/15/17	Thu	1255	Parked Motor Vehicle	0	0	1	Day	Dry	Not Coded
1399	0.000	11/15/17	Thu	1204	Sideswipe	0	0	1	Day	Dry	Not Coded
1400	0.000	11/16/17	Fri	0705	Angle	0	0	1	Day	Dry	Not Coded
1401	0.000	11/16/17	Fri	1800	Angle	0	0	1	Night	Dry	Not Coded
1402	0.000	11/16/17	Fri	2200	Angle	0	0	1	Night	Dry	Not Coded
1403	0.000	11/16/17	Fri	1907	Other Non-Fixed Object	0	0	1	Night	Dry	Not Coded
1404	0.000	11/16/17	Fri	0808	Rear-End	0	0	1	Day	Dry	Not Coded
1405	0.000	11/16/17	Fri	1510	Angle	0	0	1	Day	Dry	Not Coded
1406	0.000	11/16/17	Fri	1710	Angle	0	0	1	Night	Dry	Not Coded
1407	0.000	11/17/17	Sat	1903	Rear-End	0	1	0	Night	Dry	Not Coded
1408	0.000	11/17/17	Sat	1110	Overturn/Rollover	0	0	1	Day	Dry	Not Coded
1409	0.000	11/17/17	Sat	1546	Other Fixed Object	0	0	1	Day	Dry	Not Coded
1410	0.000	11/17/17	Sat	1650	Left-Turn	0	0	1	Day	Dry	Not Coded
1411	0.000	11/17/17	Sat	0817	Rear-End	0	0	1	Day	Dry	Not Coded
1412	0.000	11/17/17	Sat	1452	Angle	0	0	1	Day	Dry	Not Coded
1413	0.000	11/17/17	Sat	1845	Angle	0	1	0	Night	Dry	Not Coded
1414	0.000	11/17/17	Sat	1753	Rear-End	0	0	1	Night	Dry	Not Coded
1415	0.000	11/18/17	Sun	1350	Left-Turn	0	0	1	Day	Dry	Not Coded
1416	0.000	11/18/17	Sun	1834	Left-Turn	0	0	1	Night	Dry	Not Coded
1417	0.000	11/18/17	Sun	0830	Rear-End	0	0	1	Day	Dry	Not Coded
1418	0.000	11/19/17	Mon	1400	Angle	0	0	1	Day	Dry	Not Coded
1419	0.000	11/20/17	Tue	0952	Sideswipe	0	0	1	Day	Other	Not Coded
1420	0.000	11/20/17	Tue	1538	Backed Into	0	1	0	Day	Dry	Not Coded
1421	0.000	11/20/17	Tue	0735	Rear-End	0	0	1	Day	Dry	Not Coded
1422	0.000	11/20/17	Tue	1850	Angle	0	0	1	Night	Dry	Not Coded
1423	0.000	11/20/17	Tue	1709	Pedalcycle	0	0	1	Day	Dry	Not Coded
1424	0.000	11/20/17	Tue	1443	Angle	0	0	1	Day	Dry	Not Coded
1425	0.000	11/20/17	Tue	0733	Angle	0	0	1	Day	Dry	Not Coded
1426	0.000	11/20/17	Tue	1630	Rear-End	0	0	1	Night	Dry	Not Coded
1427	0.000	11/20/17	Tue	1900	Sideswipe	0	0	1	Night	Dry	Not Coded
1428	0.000	11/20/17	Tue	1835	Angle	0	0	1	Day	Dry	Not Coded
1429	0.000	11/20/17	Tue	0740	Backed Into	0	0	1	Day	Dry	Not Coded
1430	0.000	11/21/17	Wed	1357	Left-Turn	0	0	1	Day	Dry	Not Coded
1431	0.000	11/21/17	Wed	1008	Rear-End	0	0	1	Day	Dry	Not Coded
1432	0.000	11/21/17	Wed	0855	Angle	0	0	1	Day	Dry	Not Coded
1433	0.000	11/21/17	Wed	1930	Rear-End	0	0	1	Night	Dry	Not Coded
1434	0.000	11/21/17	Wed	1130	Rear-End	0	0	1	Day	Dry	Not Coded
1435	0.000	11/21/17	Wed	1730	Rear-End	0	0	1	Night	Dry	Not Coded
1436	0.000	11/21/17	Wed	1130	Sideswipe	0	0	1	Day	Dry	Not Coded
1437	0.000	11/22/17	Thu	1850	Angle	0	0	1	Night	Dry	Not Coded
1438	0.000	11/22/17	Thu	1743	Rear-End	0	0	1	Night	Dry	Not Coded
1439	0.000	11/22/17	Thu	1100	Angle	0	0	1	Day	Dry	Not Coded
1440	0.000	11/23/17	Fri	1522	Rear-End	0	0	1	Day	Dry	Not Coded
1441	0.000	11/23/17	Fri	0844	Left-Turn	0	0	1	Day	Dry	Not Coded
1442	0.000	11/23/17	Fri	1600	Left-Turn	0	0	1	Day	Other	Not Coded
1443	0.000	11/23/17	Fri	1651	Left-Turn	0	1	0	Day	Dry	Not Coded
1444	0.000	11/23/17	Fri	2143	Rear-End	0	0	1	Night	Dry	Not Coded
1445	0.000	11/23/17	Fri	1414	Rear-End	0	1	0	Day	Dry	Not Coded
1446	0.000	11/24/17	Sat	1730	Sideswipe	0	1	0	Day	Dry	Not Coded
1447	0.000	11/24/17	Sat	1819	Angle	0	0	1	Night	Dry	Not Coded
1448	0.000	11/24/17	Sat	1529	Left-Turn	0	0	1	Day	Dry	Not Coded
1449	0.000	11/25/17	Sun	2150	Curb	0	0	1	Night	Dry	Not Coded

State of Florida Department of Transportation
CRASH SUMMARY

SECTION: Ludlam Trail Corridor f — STATE ROUTE: #N/A
ROADWAY LIMITS: 0 — M.P. 0.000 TO 0.000 — ENGINEER: 0
STUDY PERIOD: FROM 1/ 2017 TO 12/ 2017 — COUNTY: Miami-Dade

No.	MILE POST	DATE	DAY	TIME	CRASH TYPE	FATAL	INJURIES	PROP DAM	DAY / NIGHT	WET / DRY	CONTRIBUTING CAUSE (VEHICLE ONLY)
1450	0.000	11/25/17	Sun	1255	Angle	0	0	1	Day	Dry	Not Coded
1451	0.000	11/26/17	Mon	1950	Other Non-Collision	0	1	0	Night	Dry	Not Coded
1452	0.000	11/26/17	Mon	1656	Sideswipe	0	1	0	Day	Dry	Not Coded
1453	0.000	11/27/17	Tue	1410	Angle	0	0	1	Day	Dry	Not Coded
1454	0.000	11/27/17	Tue	0847	Angle	0	1	0	Day	Dry	Not Coded
1455	0.000	11/27/17	Tue	2145	Rear-End	0	0	1	Night	Dry	Not Coded
1456	0.000	11/28/17	Wed	1740	Sideswipe	0	0	1	Night	Dry	Not Coded
1457	0.000	11/28/17	Wed	1850	Sideswipe	0	0	1	Night	Wet	Not Coded
1458	0.000	11/28/17	Wed	1724	Angle	0	0	1	Day	Dry	Not Coded
1459	0.000	11/28/17	Wed	1828	Sideswipe	0	0	1	Night	Dry	Not Coded
1460	0.000	11/29/17	Thu	1310	Left-Turn	0	0	1	Day	Dry	Not Coded
1461	0.000	11/29/17	Thu	1218	Sideswipe	0	0	1	Day	Dry	Not Coded
1462	0.000	11/29/17	Thu	1200	Left-Turn	0	1	0	Day	Dry	Not Coded
1463	0.000	11/29/17	Thu	2030	Angle	0	1	0	Night	Dry	Not Coded
1464	0.000	11/29/17	Thu	0648	Rear-End	0	0	1	Day	Dry	Not Coded
1465	0.000	11/29/17	Thu	1550	Rear-End	0	0	1	Day	Dry	Not Coded
1466	0.000	11/29/17	Thu	1900	Rear-End	0	0	1	Night	Dry	Not Coded
1467	0.000	11/30/17	Fri	0740	Left-Turn	0	0	1	Day	Dry	Not Coded
1468	0.000	11/30/17	Fri	1917	Angle	0	0	1	Night	Dry	Not Coded
1469	0.000	12/01/17	Sat	1342	Rear-End	0	1	0	Day	Dry	Not Coded
1470	0.000	12/01/17	Sat	1855	Angle	0	1	0	Night	Dry	Not Coded
1471	0.000	12/01/17	Sat	0701	Rear-End	0	0	1	Day	Dry	Not Coded
1472	0.000	12/01/17	Sat	1715	Sideswipe	0	0	1	Night	Dry	Not Coded
1473	0.000	12/02/17	Sun	1430	Angle	0	0	1	Day	Dry	Not Coded
1474	0.000	12/02/17	Sun	2140	Rear-End	0	0	1	Night	Dry	Not Coded
1475	0.000	12/02/17	Sun	1238	Angle	0	0	1	Day	Dry	Not Coded
1476	0.000	12/04/17	Tue	1300	Rear-End	0	0	1	Day	Dry	Not Coded
1477	0.000	12/04/17	Tue	1540	Sideswipe	0	0	1	Day	Dry	Not Coded
1478	0.000	12/04/17	Tue	1842	Rear-End	0	0	1	Night	Dry	Not Coded
1479	0.000	12/04/17	Tue	1645	Sideswipe	0	0	1	Night	Dry	Not Coded
1480	0.000	12/04/17	Tue	1327	Parked Motor Vehicle	0	0	1	Day	Dry	Not Coded
1481	0.000	12/04/17	Tue	1820	Left-Turn	0	0	1	Night	Dry	Not Coded
1482	0.000	12/04/17	Tue	1557	Rear-End	0	0	1	Day	Dry	Not Coded
1483	0.000	12/04/17	Tue	1609	Rear-End	0	0	1	Day	Dry	Not Coded
1484	0.000	12/05/17	Wed	1740	Rear-End	0	0	1	Night	Dry	Not Coded
1485	0.000	12/05/17	Wed	1045	Backed Into	0	1	0	Day	Dry	Not Coded
1486	0.000	12/05/17	Wed	1640	Other Fixed Object	0	0	1	Day	Dry	Not Coded
1487	0.000	12/05/17	Wed	1340	Rear-End	0	0	1	Day	Dry	Not Coded
1488	0.000	12/05/17	Wed	2046	Angle	0	1	0	Night	Dry	Not Coded
1489	0.000	12/05/17	Wed	1745	Sideswipe	0	0	1	Night	Dry	Not Coded
1490	0.000	12/06/17	Thu	1745	Bridge Rail	0	0	1	Night	Dry	Not Coded
1491	0.000	12/06/17	Thu	1045	Left-Turn	0	1	0	Day	Dry	Not Coded
1492	0.000	12/06/17	Thu	1556	Left-Turn	0	0	1	Day	Dry	Not Coded
1493	0.000	12/06/17	Thu	0933	Sideswipe	0	0	1	Day	Dry	Not Coded
1494	0.000	12/06/17	Thu	0853	Rear-End	0	0	1	Day	Dry	Not Coded
1495	0.000	12/06/17	Thu	0140	Parked Motor Vehicle	0	1	0	Night	Dry	Not Coded
1496	0.000	12/07/17	Fri	1041	Left-Turn	0	0	1	Day	Dry	Not Coded
1497	0.000	12/07/17	Fri	0848	Sideswipe	0	0	1	Day	Dry	Not Coded
1498	0.000	12/07/17	Fri	0830	Guardrail End	0	0	1	Day	Dry	Not Coded
1499	0.000	12/08/17	Sat	1550	Left-Turn	0	0	1	Day	Dry	Not Coded
1500	0.000	12/08/17	Sat	1910	Angle	0	0	1	Night	Dry	Not Coded
1501	0.000	12/08/17	Sat	1450	Angle	0	0	1	Day	Dry	Not Coded
1502	0.000	12/08/17	Sat	1800	Rear-End	0	0	1	Night	Dry	Not Coded
1503	0.000	12/09/17	Sun	1048	Parked Motor Vehicle	0	0	1	Day	Wet	Not Coded
1504	0.000	12/09/17	Sun	1005	Sideswipe	0	0	1	Day	Wet	Not Coded
1505	0.000	12/09/17	Sun	1656	Parked Motor Vehicle	0	0	1	Day	Wet	Not Coded
1506	0.000	12/09/17	Sun	2002	Rear-End	0	0	1	Night	Dry	Not Coded
1507	0.000	12/10/17	Mon	1920	Angle	0	1	0	Night	Dry	Not Coded
1508	0.000	12/10/17	Mon	1430	Angle	0	0	1	Day	Dry	Not Coded
1509	0.000	12/11/17	Tue	1539	Angle	0	0	1	Day	Dry	Not Coded
1510	0.000	12/11/17	Tue	1634	Angle	0	0	1	Day	Dry	Not Coded
1511	0.000	12/11/17	Tue	1134	Left-Turn	0	0	1	Day	Dry	Not Coded
1512	0.000	12/11/17	Tue	1648	Rear-End	0	0	1	Night	Dry	Not Coded
1513	0.000	12/12/17	Wed	1350	Rear-End	0	0	1	Day	Dry	Not Coded
1514	0.000	12/12/17	Wed	1820	Angle	0	0	1	Night	Dry	Not Coded
1515	0.000	12/12/17	Wed	1851	Angle	0	0	1	Night	Dry	Not Coded
1516	0.000	12/13/17	Thu	0719	Angle	0	1	0	Day	Dry	Not Coded
1517	0.000	12/13/17	Thu	1544	Rear-End	0	0	1	Day	Dry	Not Coded
1518	0.000	12/13/17	Thu	1102	Rear-End	0	0	1	Day	Dry	Not Coded

State of Florida Department of Transportation
CRASH SUMMARY

SECTION: Ludlam Trail Corridor f — STATE ROUTE: #N/A
ROADWAY LIMITS: 0 — M.P. 0.000 TO 0.000 — ENGINEER: 0
STUDY PERIOD: FROM 1/ 2017 TO 12/ 2017 — COUNTY: Miami-Dade

No.	MILE POST	DATE	DAY	TIME	CRASH TYPE	FATAL	INJURIES	PROP DAM	DAY / NIGHT	WET / DRY	CONTRIBUTING CAUSE (VEHICLE ONLY)
1519	0.000	12/13/17	Thu	0930	Left-Turn	0	0	1	Day	Dry	Not Coded
1520	0.000	12/13/17	Thu	1450	Angle	0	0	1	Day	Dry	Not Coded
1521	0.000	12/13/17	Thu	1635	Not Coded	0	0	1	Day	Dry	Not Coded
1522	0.000	12/13/17	Thu	1700	Backed Into	0	1	0	Day	Dry	Not Coded
1523	0.000	12/14/17	Fri	0852	Angle	0	0	1	Day	Dry	Not Coded
1524	0.000	12/14/17	Fri	0910	Sideswipe	0	0	1	Day	Dry	Not Coded
1525	0.000	12/14/17	Fri	1630	Left-Turn	0	0	1	Day	Dry	Not Coded
1526	0.000	12/14/17	Fri	1447	Angle	0	0	1	Day	Dry	Not Coded
1527	0.000	12/14/17	Fri	1814	Sideswipe	0	1	0	Night	Dry	Not Coded
1528	0.000	12/14/17	Fri	0011	Right-Turn	0	0	1	Night	Dry	Not Coded
1529	0.000	12/15/17	Sat	1427	Sideswipe	0	0	1	Day	Dry	Not Coded
1530	0.000	12/15/17	Sat	1345	Left-Turn	0	0	1	Day	Dry	Not Coded
1531	0.000	12/15/17	Sat	1951	Pedestrian	0	0	1	Night	Dry	Not Coded
1532	0.000	12/15/17	Sat	1053	Rear-End	0	0	1	Day	Dry	Not Coded
1533	0.000	12/15/17	Sat	1518	Rear-End	0	0	1	Day	Dry	Not Coded
1534	0.000	12/16/17	Sun	2111	Rear-End	0	0	1	Night	Dry	Not Coded
1535	0.000	12/16/17	Sun	1144	Rear-End	0	0	1	Day	Dry	Not Coded
1536	0.000	12/16/17	Sun	1154	Angle	0	0	1	Day	Dry	Not Coded
1537	0.000	12/16/17	Sun	1828	Right-Turn	0	0	1	Night	Dry	Not Coded
1538	0.000	12/16/17	Sun	2015	Other Fixed Object	0	0	1	Night	Dry	Not Coded
1539	0.000	12/16/17	Sun	1400	Not Coded	0	0	1	Day	Dry	Not Coded
1540	0.000	12/17/17	Mon	1904	Left-Turn	0	0	1	Night	Dry	Not Coded
1541	0.000	12/17/17	Mon	1300	Rear-End	0	1	0	Day	Dry	Not Coded
1542	0.000	12/17/17	Mon	1932	Angle	0	0	1	Night	Dry	Not Coded
1543	0.000	12/18/17	Tue	1900	Left-Turn	0	0	1	Day	Dry	Not Coded
1544	0.000	12/18/17	Tue	0811	Angle	0	1	0	Day	Dry	Not Coded
1545	0.000	12/18/17	Tue	1801	Rear-End	0	0	1	Night	Dry	Not Coded
1546	0.000	12/18/17	Tue	1450	Left-Turn	0	0	1	Day	Dry	Not Coded
1547	0.000	12/18/17	Tue	2009	Left-Turn	0	0	1	Night	Dry	Not Coded
1548	0.000	12/19/17	Wed	1447	Sideswipe	0	0	1	Day	Dry	Not Coded
1549	0.000	12/19/17	Wed	0820	Impact Attenuator/Crash Cushion	0	0	1	Day	Dry	Not Coded
1550	0.000	12/20/17	Thu	1501	Angle	0	0	1	Day	Dry	Not Coded
1551	0.000	12/20/17	Thu	2006	Rear-End	0	0	1	Night	Dry	Not Coded
1552	0.000	12/20/17	Thu	1810	Angle	0	0	1	Day	Dry	Not Coded
1553	0.000	12/20/17	Thu	1725	Backed Into	0	1	0	Day	Dry	Not Coded
1554	0.000	12/20/17	Thu	1911	Sideswipe	0	0	1	Night	Dry	Not Coded
1555	0.000	12/20/17	Thu	0348	Rear-End	0	0	1	Night	Dry	Not Coded
1556	0.000	12/20/17	Thu	1522	Rear-End	0	0	1	Day	Dry	Not Coded
1557	0.000	12/20/17	Thu	1400	Rear-End	0	0	1	Day	Dry	Not Coded
1558	0.000	12/21/17	Fri	1315	Sideswipe	0	0	1	Day	Dry	Not Coded
1559	0.000	12/21/17	Fri	1633	Rear-End	0	0	1	Day	Dry	Not Coded
1560	0.000	12/21/17	Fri	0955	Rear-End	0	0	1	Day	Dry	Not Coded
1561	0.000	12/21/17	Fri	1535	Sideswipe	0	1	0	Day	Dry	Not Coded
1562	0.000	12/21/17	Fri	1511	Tree (Standing)	0	0	1	Day	Dry	Not Coded
1563	0.000	12/21/17	Fri	1818	Backed Into	0	0	1	Night	Dry	Not Coded
1564	0.000	12/21/17	Fri	1710	Angle	0	0	1	Night	Dry	Not Coded
1565	0.000	12/21/17	Fri	1348	Rear-End	0	0	1	Day	Dry	Not Coded
1566	0.000	12/21/17	Fri	1717	Left-Turn	0	0	1	Night	Dry	Not Coded
1567	0.000	12/22/17	Sat	1403	Left-Turn	0	0	1	Day	Dry	Not Coded
1568	0.000	12/22/17	Sat	1759	Rear-End	0	0	1	Night	Dry	Not Coded
1569	0.000	12/22/17	Sat	1248	Angle	0	0	1	Day	Dry	Not Coded
1570	0.000	12/22/17	Sat	1430	Sideswipe	0	0	1	Day	Dry	Not Coded
1571	0.000	12/22/17	Sat	0958	Left-Turn	0	1	0	Day	Dry	Not Coded
1572	0.000	12/22/17	Sat	1255	Left-Turn	0	0	1	Day	Dry	Not Coded
1573	0.000	12/22/17	Sat	1733	Head-On	0	0	1	Day	Dry	Not Coded
1574	0.000	12/22/17	Sat	1829	Angle	0	0	1	Night	Dry	Not Coded
1575	0.000	12/23/17	Sun	2300	Sideswipe	0	0	1	Night	Dry	Not Coded
1576	0.000	12/23/17	Sun	1655	Sideswipe	0	0	1	Day	Dry	Not Coded
1577	0.000	12/24/17	Mon	2350	Not Coded	0	0	1	Night	Dry	Not Coded
1578	0.000	12/26/17	Wed	1240	Angle	0	0	1	Day	Dry	Not Coded
1579	0.000	12/26/17	Wed	0830	Left-Turn	0	0	1	Day	Wet	Not Coded
1580	0.000	12/26/17	Wed	1425	Rear-End	0	0	1	Day	Dry	Not Coded
1581	0.000	12/27/17	Thu	2123	Angle	0	0	1	Night	Dry	Not Coded
1582	0.000	12/27/17	Thu	1345	Rear-End	0	1	0	Day	Dry	Not Coded
1583	0.000	12/27/17	Thu	1038	Angle	0	0	1	Day	Dry	Not Coded
1584	0.000	12/27/17	Thu	1023	Angle	0	0	1	Day	Dry	Not Coded
1585	0.000	12/28/17	Fri	1332	Left-Turn	0	1	0	Day	Dry	Not Coded
1586	0.000	12/29/17	Sat	1900	Left-Turn	0	0	1	Night	Dry	Not Coded
1587	0.000	12/29/17	Sat	1300	Sideswipe	0	1	0	Day	Dry	Not Coded

State of Florida Department of Transportation
CRASH SUMMARY

SECTION:	Ludlam Trail Corridor f			STATE ROUTE:	#N/A
ROADWAY LIMITS:	0	M.P. 0.000	TO 0.000	ENGINEER: 0	
STUDY PERIOD:	FROM 1/ 2017	TO 12/ 2017		COUNTY: Miami-Dade	

No.	MILE POST	DATE	DAY	TIME	CRASH TYPE	FATAL	INJURIES	PROP DAM	DAY / NIGHT	WET / DRY	CONTRIBUTING CAUSE (VEHICLE ONLY)
1588	0.000	12/29/17	Sat	1415	Sideswipe	0	0	1	Day	Dry	Not Coded
1589	0.000	12/31/17	Mon	1845	Rear-End	0	0	1	Day	Dry	Not Coded
1590	0.000	12/31/17	Mon	0310	Angle	0	0	1	Night	Dry	Not Coded
1591	0.000	12/31/17	Mon	1330	Other Fixed Object	0	0	1	Day	Dry	Not Coded

Total No.	Fatal	Injury	PDO	Rear-End	Head-On	Angle	Left-Turn	Right-Turn	Sideswipe	Backed Into	Ped/Bike	Parked Car	Fixed Object	Ran into Water	Other
1591	**2**	**216**	**1373**	**606**	**14**	**308**	**205**	**51**	**219**	**61**	**15**	**37**	**17**	**0**	**36**
Percent	*0.13%*	*13.58%*	*86.30%*	*38.09%*	*0.88%*	*19.36%*	*12.88%*	*3.21%*	*13.76%*	*3.83%*	*0.94%*	*2.33%*	*1.07%*	*0.00%*	*2.26%*