DEPARTMENTAL INPUT
CONTRACT/PROJECT MEASURE ANALYSIS AND RECOMMENDATION

☒ New Contract ☐ OTR ☐ Sole Source ☐ Bid Waiver ☐ Emergency ☐ Re-Bid ☐ Other

Previous Contract/Project No. **RTQ-00103**

LIVING WAGE APPLIES: ☐ YES ☒ NO

Requisition No./Project No.: **0000188519** TERM OF CONTRACT **90 DAYS**

Requisition /Project Title: **CD2.07(3) Plant 1 Clarifier 3**

Description: **CDWWTP PLANT 1 CLARIFIER No.3 STRUCTURAL REHABILITATION PROJECT CONSENT DECREE PROJECT CD2.07(3)**

Issuing Department: **WASD** Contact Person: **BASDEO BUDHRAM** Phone: **786-268-5703**

Estimate Cost: **$1,190,000.00**

Funding Source: GENERAL FEDERAL OTHER **GENERAL**

ANALYSIS

Commodity Codes: **630**

Contract/Project History of previous purchases three (3) years
Check here ☐ if this is a new contract/purchase with no previous history.

	EXISTING	2ND YEAR	3RD YEAR
Contractor:			
Small Business Enterprise:			
Contract Value:			

Comments:

Continued on another page (s): ☐ Yes ☐ No

RECOMMENDATIONS

	Set-aside	Sub-contractor goal	Bid preference	Selection factor
SBE			x	

Basis of recommendation:

Signed:

Date sent to SBD:

Date returned to PMS:

Revised April 2005

Miami-Dade Water and Sewer Department
Requisition

Business Unit:	WASD1	**Requester:**	e315766
Requisition:	0000188519	**Requested By:**	HUREN AN
Requisition Name:	CD2.07(3) Plant 1 Clarifier 3	**Entered Date:**	9/11/18
Status:	Pending Approval	**Buyer:**	e216994
Requisition Total:	1,190,000.00	**Ship To ID:**	WSD06

Header Comments: The successful bidder shall be required to complete the structural rehabilitation work of Clarifiers No. 3 at Central District Wastewater Treatment Plant (CDWWTP) Plant 1 in the period described in the Special Provisions section of the specifications.

Requisition Line Information

Ln	Description	Qty	UOM	Unit Price	Total Line	Line Status	Work Order ID
1	MOBILIZATION	1.0000	EA	55,350.00	55,350.00	Pending	

Distribution

Dist	Fund	Acct	Org	O&M	Loc	Project	Activity	Category	SubCat	Amount
1	EW660	724452	WS22701			S049655	GENERAL			55,350.00

Ln	Description	Qty	UOM	Unit Price	Total Line	Line Status	Work Order ID
2	WATER PRESSURE CLEANING	52400.0000	SQF	2.45	128,380.00	Pending	

Distribution

Dist	Fund	Acct	Org	O&M	Loc	Project	Activity	Category	SubCat	Amount
1	EW660	724452	WS22701			S049655	GENERAL			128,380.00

Ln	Description	Qty	UOM	Unit Price	Total Line	Line Status	Work Order ID
3	CHEMICAL CLEANING OF CONCRETE EFFLORESCENCE	720.0000	SQF	9.10	6,552.00	Pending	

Distribution

Dist	Fund	Acct	Org	O&M	Loc	Project	Activity	Category	SubCat	Amount
1	EW660	724452	WS22701			S049655	GENERAL			6,552.00

Miami-Dade Water and Sewer Department
Requisition

Ln	Description	Qty	UOM	Unit Price	Total Line	Line Status	Work Order ID
4	ABRASIVE BLASTING / ULTRA-HIGH PRESSURE JETTING / MECHANICAL SURFACE PREPARATION	36710.0000	SQF	6.10	223,931.00	Pending	

Distribution

Dist	Fund	Acct	Org	O&M	Loc	Project	Activity	Category	SubCat	Amount
1	EW660	724452	WS22701			S049655	GENERAL			223,931.00

Ln	Description	Qty	UOM	Unit Price	Total Line	Line Status	Work Order ID
5	TYPE 1 CONCRETE REPAIRS	1050.0000	SQF	34.50	36,225.00	Pending	

Distribution

Dist	Fund	Acct	Org	O&M	Loc	Project	Activity	Category	SubCat	Amount
1	EW660	724452	WS22701			S049655	GENERAL			36,225.00

Ln	Description	Qty	UOM	Unit Price	Total Line	Line Status	Work Order ID
6	TYPE 2 CONCRETE REPAIRS	1050.0000	SQF	59.00	61,950.00	Pending	

Distribution

Dist	Fund	Acct	Org	O&M	Loc	Project	Activity	Category	SubCat	Amount
1	EW660	724452	WS22701			S049655	GENERAL			61,950.00

Ln	Description	Qty	UOM	Unit Price	Total Line	Line Status	Work Order ID
7	TYPE 3 CONCRETE REPAIRS	270.0000	SQF	197.00	53,190.00	Pending	

Distribution

Dist	Fund	Acct	Org	O&M	Loc	Project	Activity	Category	SubCat	Amount
1	EW660	724452	WS22701			S049655	GENERAL			53,190.00

Miami-Dade Water and Sewer Department
Requisition

Ln	Description	Qty	UOM	Unit Price	Total Line	Line Status	Work Order ID
8	CRACK REPAIR USING GRAVITY-FED GROUTING	100.0000	LF	61.57	6,157.00	Pending	

Distribution

Dist	Fund	Acct	Org	O&M	Loc	Project	Activity	Category	SubCat	Amount
1	EW660	724452	WS22701			S049655	GENERAL			6,157.00

Ln	Description	Qty	UOM	Unit Price	Total Line	Line Status	Work Order ID
9	CRACK REPAIR USING PRESSURE-INJECTION GROUTING	100.0000	LF	123.00	12,300.00	Pending	

Distribution

Dist	Fund	Acct	Org	O&M	Loc	Project	Activity	Category	SubCat	Amount
1	EW660	724452	WS22701			S049655	GENERAL			12,300.00

Ln	Description	Qty	UOM	Unit Price	Total Line	Line Status	Work Order ID
10	RESURFACING OF CONCRETE SURFACES	38200.0000	SQF	7.00	267,400.00	Pending	

Distribution

Dist	Fund	Acct	Org	O&M	Loc	Project	Activity	Category	SubCat	Amount
1	EW660	724452	WS22701			S049655	GENERAL			267,400.00

Ln	Description	Qty	UOM	Unit Price	Total Line	Line Status	Work Order ID
11	EPOXY COATING SYSTEM APPLICATION	38200.0000	SQF	6.20	236,840.00	Pending	

Distribution

Dist	Fund	Acct	Org	O&M	Loc	Project	Activity	Category	SubCat	Amount
1	EW660	724452	WS22701			S049655	GENERAL			236,840.00

Miami-Dade Water and Sewer Department
Requisition

Ln	Description	Qty	UOM	Unit Price	Total Line	Line Status	Work Order ID
12	FLOOR TRANSVERSE JOINT REPAIR	350.0000	LF	88.50	30,975.00	Pending	

Distribution

Dist	Fund	Acct	Org	O&M	Loc	Project	Activity	Category	SubCat	Amount
1	EW660	724452	WS22701			S049655	GENERAL			30,975.00

Ln	Description	Qty	UOM	Unit Price	Total Line	Line Status	Work Order ID
13	JOINT SEALANT REPLACEMENT	500.0000	LF	30.80	15,400.00	Pending	

Distribution

Dist	Fund	Acct	Org	O&M	Loc	Project	Activity	Category	SubCat	Amount
1	EW660	724452	WS22701			S049655	GENERAL			15,400.00

Ln	Description	Qty	UOM	Unit Price	Total Line	Line Status	Work Order ID
14	CLOSEOUT	1.0000	EA	55,350.00	55,350.00	Pending	

Line Comments:
<<Once all construction has been completed, Contractor shall be required to remove all scaffolding, construction equipment, safety equipment, as well as all debris, dirt, and materials used during construction, as indicated in the Contract documents.

This item shall include all remaining work after Substantial Completion, including performing final cleanup and addressing punch list items.

The value of this item shall be a minimum of 5% of the total bid price.

The combined value of Items 1 and 14 shall not exceed ten percent (10%) of the total bid price.>>

Distribution

Dist	Fund	Acct	Org	O&M	Loc	Project	Activity	Category	SubCat	Amount
1	EW660	724452	WS22701			S049655	GENERAL			55,350.00

MIAMI-DADE COUNTY, FLORIDA

BOARD OF COUNTY COMMISSIONERS

CARLOS A. GIMENEZ, MAYOR

ESTEBAN L. BOVO, Jr., CHAIRMAN

BARBARA J. JORDAN
JEAN MONESTIME
AUDREY M. EDMONSON
SALLY A. HEYMAN
REBECA SOSA

XAVIER L. SUAREZ
DANIELLA LEVINE CAVA
DENNIS C. MOSS
SEN. JAVIER D. SOUTO
JOE A. MARTINEZ
JOSE "PEPE" DIAZ

MIAMI-DADE WATER & SEWER DEPARTMENT
CENTRAL DISTRICT WASTEWATER TREATMENT PLANT

CDWWTP PLANT 1 CLARIFIER BASIN No. 3
STRUCTURAL REHABILITATION

CONSENT DECREE PROJECT 2.07(3)
CONTRACT NO. RTQ-00103
PROJECT/ER No. S049655
PCTS No. 13280

TECHNICAL SPECIFICATIONS

ISSUED FOR BID – AUGUST 2018

MIAMI-DADE WATER AND SEWER DEPARTMENT
KEVIN LYNSKEY, DIRECTOR

PREPARED BY
GHD

TABLE OF CONTENTS (TOC)

SPECIAL PROVISIONS ..... (5 pages)

TECHNICAL SPECIFICATIONS

Division 1 GENERAL CONDITIONS

01005 A Defined Terms
01010 A Summary of Work
01011 A Site Conditions and Protection of Existing Facilities
01015 A Index of Drawings
01025 A Measurement and Payment
01090 A Reference Standards
01120 A Sequence of Construction
01150 A Project Schedule, Meetings and Reports
01340 A Shop Drawings, Product Data, and Samples
01350 A Site Security
01370 A Schedule of Values
01380 A Construction Photographs
01410 A Testing and Testing Laboratory Services
01421 A Abbreviations of Institutions
01501 A Safety Requirements and Protection of Property
01570 A Temporary Environmental Controls
01600 A Material and Equipment Shipment, Handling, Storage, and Protection
01660 A Site Access and Storage
01700 A Contract Closeout
01710 A Cleaning
01720 A Project Record Documents

Division 3 CONCRETE

03200 Concrete Reinforcement
03710 Removing Efflorescence from Concrete
03721 Preparation for Resurfacing Concrete
03732 Concrete Repair

Division 9 FINISHES

09660 High Performance Protective Coating

APPENDICES

Appendices A through E, G, and H included herewith are being provided for informational purposes only and are not part of the Contract Documents. The Contractor is responsible for any interpretations or conclusions the Contractor draws from the available documents. It is the responsibility of the Contractor to field verify all existing conditions.

Appendix A Department of Environmental Resources Management, Dade-County Notice to All Contractors (1 Page)

Appendix B Standard Details (Not Used)

Appendix C WASD ID Security Procedures non-WASD Employees (Not Used; Instead Refer to Section 01350A)

Appendix D M-DWASD Safety Unit Construction Safety and Health Policy (4 Pages)

Appendix E Visual Inspection Report
CDWWTP Plant 1 Clarifier Basin No. 3 Structural Rehabilitation (Not Included with This Submittal)

Appendix F Design Plans - Consent Decree 2.07(3) CDWWTP Plant 1 Clarifier Basin No. 3 Structural Rehabilitation (10 Pages)

Appendix G WASD Prequalified Protective Coating Services Vendors (4 Pages)

Appendix H Record Drawings – EPA Project No. C 120429130, Contract No. S-285, Final Settling Tanks and Facilities (66 Pages)

END OF TABLE OF CONTENTS

SPECIAL PROVISIONS
RTQ-00103

Table of Contents

SP 1.0 ADDITIONAL QUALIFICATIONS OF BIDDERS 2
SP 2.0 INSURANCE REQUIREMENTS 2
SP 3.0 LIQUIDATED DAMAGES 2
SP 3.1 Contract Liquidated Damages 2
SP 3.2 Consent Decree Liquidated Damages 3
SP 4.0 SMALL BUSINESS MEASURES 5
SP 5.0 COMMUNITY WORK FORCE GOALS 5
SP 6.0 USER ACCESS PROGRAM 5
SP 7.0 REVIEW OF RECORDS 5

These Special Provisions are intended to modify, clarify, or quantify items within the General Terms and Conditions and Instructions to Bidders based on the unique requirements of this contract.

Compliance with the foregoing requirements shall not relieve the Contractor of his liability and obligation under this section or under any other section of this agreement.

SP 1.0 ADDITIONAL QUALIFICATIONS OF BIDDERS

In order to aid the County in making an award of the Contract, the Bidder shall be pre-qualified under County Contract RTQ-00103.

SP 2.0 INSURANCE REQUIREMENTS

Refer to requirement under County Contract RTQ-00193.

SP 3.0 LIQUIDATED DAMAGES

This project is mandated by a Consent Decree which has established construction schedule milestones that are critical for completion of this construction contract. These milestones have either "Consent Decree Liquidated Damages", "Liquidated Damages" or both associated with them.

SP 3.1 Contract Liquidated Damages

The parties to the Contract agree that time, in the completion of the Work, is of the essence. The County and the Contractor recognize and agree that the precise amount of actual damages for delay in the performance and completion of the Work is impossible to determine as of the date of execution of the Contract and that proof of the precise amount will be difficult. Therefore, the Contractor shall be assessed Contract Liquidated Damages on a daily basis for each Day that individual milestones, as specified below, are not timely achieved or that Contract Time is exceeded due to a non-excusable delay. These Contract Liquidated Damages shall be assessed, not as a penalty, but as compensation to the County for expenses which are difficult to quantify with any certainty and which were incurred by the County due to the delay. The amount of Contract Liquidated Damages assessed shall be an amount, as stipulated below, per day for each calendar day that individual milestones as specified in the Contract are not timely achieved or that the Project is delayed due to a non-excusable delay.

In the event the Contractor fails to perform any other covenant or condition (other than time-related) of this Contract relating to the Work, the Contractor shall become liable to the County for any actual damages which the owner may sustain on the part of the Contractor. The County reserves the right to retain these amounts from monies due the Contractor.

Failure to complete Milestone 2 within the duration indicated in Table 1 below shall result in Contract Liquidated Damages.

Table 1

Milestone	Description	Duration (Calendar Days from Issuance of Purchase Order to Contractor)	Contract Liquidated Damages (1)
1	Accepted Safety Plan, Accepted Schedule, Company Background Checks, and Acquire WASD Security ID Badges	45	
2	Substantial Completion(2)	180	$300 Per Calendar Day
3	Final Completion	210	

NOTES:

(1) The above Liquidated Damages are specifically related to Contract Time. Additional Consent Decree Stipulated Penalties may be incurred as noted in Section SP 3.2. Liquidated damages listed in this table are cumulative with those listed in Section SP 3.2.

(2) Substantial Completion entails completion of Work, conducting a Substantial Completion inspection, resolution of all Substantial Completion inspection punchlist items, and turning over the facility to the Department for full Beneficial Use.

SP 3.2 Consent Decree Liquidated Damages

Miami-Dade County has entered into a Consent Decree (United States District Court for the Southern District of Florida, Case No. 1:12-cv-24400-FAM, herein referred to as Consent Decree) with the United States, Environmental Protection Agency, the State of Florida, and Florida Department of Environmental Protection (FDEP) (collectively "Regulatory Agencies"), to remediate its aging wastewater infrastructure. This project is intended to satisfy the requirements identified in the Consent Decree as CD Project CD 2.07(3). The full text of the Consent Decree is available online at:

http://www.miamidade.gov/water/library/reports/consent-decree/consent-decree-signed.pdf

The Consent Decree provides that the Regulatory Agencies may impose stipulated penalties against Miami-Dade County for failure to meet the project's Consent Decree Compliance Date and for certain sanitary sewer overflows (SSOs). In the event the Regulatory Agencies impose such penalties against Miami-Dade County and such penalties are a result of the Contractor's lack of performance, failure to meet the Consent Decree Compliance Date, or a SSO that occurs during construction, the Contractor shall be liable to the County for such amounts as additional Liquidated Damages ("Consent Decree Liquated Damages"). Please note these Consent Decree

Liquidated Damages are in addition to the Contract Liquidated Damages and may be assessed separately and/or in combination.

(a) Failure to complete work on or before the Consent Decree Compliance Date per table below shall result in Consent Decree Liquidated Damages as listed below.

CD Project No.	Consent Decree Compliance Date
2.07(3)	August 15, 2026

Note: In the event that the above Consent Decree Compliance Date occurs before the Substantial Completion date established in Section SP 3.1, Table 1, the Consent Decree Liquidated Damages shall commence on the later of the two dates.

Period of Noncompliance per Violation per Day (Calendar Days from Issuance of Purchase Order to Contractor):

One (1) to fourteen (14) days	$1,000
Fifteen (15) to thirty days (30) days	$2,000
Thirty one (31) to sixty (60) days	$3,000
Sixty one (61) to one hundred eighty (180) days	$4,000
More than one hundred eighty (180) days	$5,000

(b) Consent Decree Liquidated Damages for each SSO reaching waters of the United States due to a release of wastewater caused by Contractor may be assessed as:

Description	Before 4/09/2019	After 4/09/2019
1 to 10,000 gallons	$1,000	$1,000
10,000 to 250,000 gallons	$2,000	$4,000
250,000 to 1,000,000 gallons	$5,000	$10,000
Greater than 1,000,0000 gallons	$10,000	$20,000

(c) Consent Decree Liquidated Damages for each SSO NOT reaching waters of the United States due to a release caused by Contractor may be assessed as:

Description	Before 4/09/2019	After 4/09/2019
1 to 10,000 gallons	$500	$500
10,000 to 250,000 gallons	$1,000	$2,000

Description	Before 4/09/2019	After 4/09/2019
250,000 to 1,000,000 gallons	$2,500	$5,000
Greater than 1,000,0000 gallons	$5,000	$10,000

SP 4.0 SMALL BUSINESS MEASURES

Pursuant to Section 10-33.02 of the Code of Miami-Dade County, Florida, "a contractor who fails to meet an established CSBE goal shall submit a CSBE Make-Up Plan for approval of the [Small Business Development ("SBD")] Division Director. A Make-up Plan and a corresponding Schedule of Intent Affidavit must be submitted as part of any bid or proposal submitted for future contracts at the time of bid or proposal submittal." Failure to include the required Schedule of Intent Affidavit with bids or proposals for any future contracts shall result in the submittal being deemed non-responsive. **To verify whether your company has a SBE make-up requirement,** please refer to the SBD webpage at:

http://www.miamidade.gov/smallbusiness/library/reports/goal-deficit.pdf

For questions regarding this requirement, contact Alice Hidalgo-Gato, Division Director, Contract Monitoring and Compliance at (305) 375-3153.

Small Business Goals for this contract are as stated in the Advertisement for Bids.

SP 5.0 COMMUNITY WORK FORCE GOALS

Not Applicable

SP 6.0 USER ACCESS PROGRAM

Not Applicable Bond Funded

SP 7.0 REVIEW OF RECORDS

In addition to the five (5) year retention period specified in this Contract, the following retention for Consent Decree projects shall apply: Until five (5) years after the termination of this Consent Decree, the contractors and agents shall preserve, all non-identical copies of all documents, records, or other information (including documents, records, or other information in electronic form) in its or its agents' possession or control, or that come into its or its agents' possession or control, and that relate in any manner to the Contractor or its agents performance of its obligations under this Contract. This information-retention requirement shall apply regardless of any contrary corporate or institutional policies or procedures. At any time during this information-retention period, upon request by the County, the Contractor shall provide copies of any documents, records, or other information required to be maintained under this Paragraph.

END OF SECTION

SECTION 01005A

DEFINED TERMS

PART 1 - GENERAL

1.01 SCOPE

When used in this publication the following underlined terms shall have meaning as hereinafter defined:

A. The masculine pronoun shall include the feminine and neuter, and the singular shall include the plural.

B. "And" shall also mean "or" and "or" shall also mean "and", wherever the context or purpose so requires.

C. "Person" shall mean and include any individual, combination of individuals, partnership, society, association, joint stock company, corporation, estate, receiver, trustee, assignee, referee or any other person acting in a fiduciary or representative capacity, whether appointed by a court or otherwise.

D. "County", "Dade County", "Miami-Dade County" or "Metropolitan Dade County (MDC)" shall mean Miami-Dade County, Florida, a political subdivision of the State of Florida, acting by and through the Board of County Commissioners, which is a party hereto and for which this Contract is to be performed.

E. "Department" shall mean the Miami-Dade Water and Sewer Department of Miami-Dade County, Florida. “Department” and “WASD” shall be synonymous.

F. "Director" shall mean the Director of the Miami-Dade Water and Sewer Department.

G. "Engineer" shall mean the Chief, Engineering Division of the Miami-Dade Water and Sewer Department or an authorized representative.

H. "Inspector" shall mean any person designated by the Engineer to examine and inspect materials and work for the purpose of insuring compliance by the Contractor with all requirements of the Plans and Specifications.

I. "Developer" shall mean the person, who has entered into an agreement with the Department to construct a Project.

J. "Contractor" shall mean the party of the second part to the contract. The person, firm, or corporation, holding a current Certificate of Competency applicable to the type of work to be performed, with whom a contract has been made directly or through accredited representatives, that may have entered into a contract with the County and who is primarily liable for the acceptable performance of the work for which he has contracted and also for the payment of all legal debts pertaining to the work, or

Contractor shall mean any person engaged by the Developer to supply labor, materials or equipment for use in the fulfillment of the project.

K. "Subcontractor" shall mean any person engaged by the Contractor to supply labor, materials or equipment for use in the fulfillment of the Project.

L. "Engineer of Record" shall mean the Florida-certified professional engineer engaged by the Developer or the Department to design the proposed Project.

M. "Project" shall mean and include all construction for which the Contractor is responsible under the Contract Documents, or shall mean and include all construction for which the Developer or Engineer of Record is responsible under the agreement with the Department.

N. "Plans" shall mean construction drawings prepared by the Developer or Engineer of Record for the proposed Project.

O. "Standards Details" or "Standards" the Department's latest published standard construction details, copies of which are bound herein.

P. "Equal" or "Approved Equal" shall mean only that material or product which is specifically approved by the Engineer as being an acceptable substitute for a material or product designated in the Specifications or by a trade name or the name of the manufacturer.

Q. "Domestic" when applied to materials, shall mean materials or products produced within the continental limits of the United States.

R. "Water level" or "water table" shall mean the top elevation of the natural ground water table as it exists in the trench at any particular site and time during the installation.

S. "Surveyor" shall mean a professional surveyor registered in the State of Florida to engage in the practice of surveying.

T. "Construction" as used herein shall mean rehabilitation or repair.

U. "Substantial Completion" as used herein shall mean completion of construction, in accordance with the contract documents, such that facilities have been placed in operation, and is expected to both function and perform as designed. "Substantial Completion" entails completion of a Substantial Completion inspection, resolution of all Substantial Completion Punch List items, and turning over of the facility to the Department for Beneficial Use.

V. “Final Completion” as used herein shall mean that Substantial Completion has been achieved and that all restoration, administrative, and miscellaneous items have been completed according to the terms and conditions set forth in the contract documents.

W. “Contract” as used herein shall mean the entire and integrated written agreement between County and Contractor concerning the Project. The Contract supersedes prior negotiations, representations, or agreements, whether written or oral.

X. “Contract Documents” as used herein shall consist of the Special Provisions, Technical Specifications and Contract Drawings, Appendices, including all modifications and Addenda thereof incorporated in any of the documents before execution of the contract.

Y. “Specifications” as used herein shall mean the written requirements for materials, equipment, systems, standards, and workmanship as applied to the Project, and certain administrative requirements and procedural matters applicable to the Project.

Z. The words "Plans," "Drawings," and "Contract Drawings" as used herein are hereby deemed to be synonymous.

PART 2 – PRODUCTS (Not Used)

PART 3 – EXECUTION (Not Used)

END OF SECTION

SECTION 01010A

SUMMARY OF WORK

PART 1 - GENERAL

1.01 SECTION INCLUDES

A. This Section describes the project in general, and provides an overview of the extent of the work to be performed under this Contract. Detailed requirements and extent of work are stated in the applicable Specification sections and shown on the Contract Drawings. The Contractor shall, except as otherwise specifically stated herein or in any applicable parts of the Contract Documents, provide and pay for all labor, materials, equipment, tools, construction equipment, and other facilities and services necessary for proper execution, testing, and completion of the work under this Contract.

1.02 SPECIFICATIONS

A. The Specifications included in these Contract Documents establish the minimum performance and quality requirements for materials and equipment together with the minimum standards for quality of workmanship and appearance. Generally, there has been no attempt to separate the Specification sections into groups for the work of separate subcontractors, or for work to be performed by the various trades. Should there be any question as to the interpretation of any particular Specification section or part of Specification section, such question should be directed to the Department prior to the submittal of a proposal for the work under this Contract.

B. The work described in the Plans and Specifications is intended to be comprehensive and descriptive, not an exact and complete representation of the actual finished work. Installed work shall include all accessories required to provide complete and satisfactory systems as specified, even though some items may not be specifically mentioned in the Plans and Specifications.

C. It is the intent of the Department to obtain a complete functional, and satisfactory installation under this project, and any items of labor, equipment or materials, which may be reasonably assumed as necessary to accomplish this end shall be supplied, whether or not they are specifically indicated in the Contract Documents. The Contractor shall provide all materials for the project unless they are specifically called out in these Specifications as being supplied by Department. The Contractor shall also supply all sheeting, shoring, bracing and all other labor, material or equipment required to preclude damage to, or loss of functionality of, any existing facility or system.

1.03 REASONABLY IMPLIED PARTS OF THE WORK SHALL BE DONE THOUGH ABSENT FROM SPECIFICATIONS

A. Any part of the work which is not mentioned in the Specifications but is shown on the Drawings, or any part not shown on the Drawings but described in the Specifications, or any part not shown on the Drawings nor described in the Specifications, but which is necessary or normally required as a part of such work, or is necessary or required to

make each installation satisfactorily and legally operable, shall be performed by the Contractor as incidental work, without extra cost to the Department, as if fully described in the Specifications and shown on the Drawings, and the expense thereof shall be included in the applicable unit prices or lump sum bid for the Work.

1.04 DESCRIPTION OF WORK

A. The Work consists of furnishing materials, labor, and equipment necessary for the structural rehabilitation of existing Clarifier Basin No. 3 at the Central District Wastewater Treatment Plant (CDWWTP) Plant No. 1. The CDWWTP is owned and operated by the Department and located at 3989 Rickenbacker Causeway in Virginia Key, Florida.

B. The principal items of work included under this Project include:

1. Mobilization and performing preparatory work including setting up temporary facilities, preparing shop drawing submittals, and the mobilization to the Project site of the Contractor's construction equipment, supplies, materials, personnel, safety equipment and first aid supplies. Temporary facilities and temporary utility connections shall be provided as required to support the execution of the Contract work.

2. Pressure washing cleaning of concrete surfaces. Pressure washing cleaning shall be in accordance with the requirements of Section 03721, Preparation for Resurfacing Concrete.

3. Preparation of surfaces by chemical cleaning of efflorescence in accordance with the requirements of Section 03710, Removing Efflorescence from Concrete.

4. Remove existing surface coating systems and prepare surface using industry-accepted methods in accordance with Section 03721, Preparation for Resurfacing Concrete, and in compliance with required environmental controls to achieve the necessary surface profile for a fully warranted epoxy coating system. The Contractor's attention is directed to the presence of an existing Rhino Lining Protective Coating System that must be removed to facilitate the Work. The Contractor shall consider this during the formulation of the bid.

5. After completion of the preparatory surface work, thoroughly clean the inside of the clarifier tank and any surrounding affected areas of all grit, debris, and material residue, and properly handle, collect, transport, and dispose of such.

6. Inspection of concrete surfaces after final blasting, after application of each coating system coat, and at Final Walkthrough.

7. Reparation of defects such as cracks, scaling, spalling, and construction joints as detailed on the Contract Drawings. Structural concrete repairs by troweling, gunite, or other specified method of epoxy or cementitious compounds are generally required, as applicable. Concrete patching and rebar repairs shall be completed per Section 03200, Concrete Reinforcement and Section 03732, Concrete Repair.

8. Supply and application of an epoxy cementitious mortar to resurface all concrete surfaces scheduled to receive the epoxy coating system (except the clarifier floor surfaces) as specified by these Contract Documents and as required to create a smooth, monolithic surface for a fully warranted epoxy coating system.

9. Application using rolling or spraying of a primer followed by two coats of 100% solid, two-part, non-solvent containing, protective epoxy coating on all surfaces of the clarifier(s) that are scheduled to receive the Work. High-performance protective coatings shall be applied per Section 09660, High Performance Protective Coating. Surfaces scheduled to receive the coating system are listed below. All surfaces are reinforced cast-in-place concrete, with the exception of the weir plate. Floor slab shall not receive coating system application.

    a. Sludge collection sump surfaces.

    b. Wall surfaces (excluding exterior faces of exterior walls).

    c. All column, knee-wall, and concrete beam surfaces.

    d. Bottom (soffit) of elevated deck and walkways (top and sides shall not require coating system application).

    e. Bottoms, sides, and interior surfaces of effluent collection troughs.

    f. Bottoms, sides, and interior surfaces of scum collection trough. Department shall establish bypass, as required to permit completion of the scum collection trough Work.

    g. Both sides of FRP weir plate (front side only for weir plates at common effluent trough). Note that existing weir plate shall receive water pressure cleaning, but shall not receive sandblasting or ultra-high jetting.

    h. Slide gates and stop plates (interior side) and interior concrete faces of ports/openings. Interior faces of ports/opening, including effluent channel drain ports and scum gate openings, shall receive water pressure cleaning and protective coating system application. Contractor shall take care to protect existing gates/plates. Coating system once cured shall not impede gate/plate travel. Influent slide gate ports that are not accessible, due to the presence of inlet baffles shall not receive cleaning or coating.

10. Removal of existing joint sealant and supply and installation of new joint sealant for all existing construction and expansion joints, including at construction joints, elevated walkway joints, vertical wall joints, horizontal floor joints, expansion joints at interior columns, and any other sealed joints.

11. After Substantial Completion, clean the site and restore all disturbed surfaces including, but not being limited to, equipment staging, storage, and lay down areas.

C. Bidders shall carefully examine all Contract Documents and all available information with respect to existing conditions, if available; shall visit the site to make a thorough investigation of conditions that may in any manner affect the performance of the Work; shall familiarize themselves with federal, state, and local laws, ordinances, rules and regulations affecting performance of the Work; and shall carefully coordinate their observations with the requirements of the Contract Documents.

D. The Successful Bidder, by signing the Contract, agrees that he will make no claim for additional payment, or for an extension of time for completion of the Work, or for any other concession, because of any misinterpretation or misunderstanding, on his part, of the Contract Documents, or because of any failure, on his part, to fully acquaint himself with all conditions relating to the Work, or for any other reason.

E. The work will take place in areas defined by the Occupational Safety and Health Administration (OSHA) as a confined space and regarded by the County as a permit-required confined space. Safety requirements are included under this Specification.

1.05 WORK BY OTHERS

A. The Contractor shall coordinate the Work with the Department. The Department has planned the replacement of existing mechanical process equipment in advance of the Work. Refer to Section 01120A, Sequence of Construction, for additional detail relating to coordination with Department's operations and construction sequencing. Work to be completed by Department shall include, but not be limited to, the following tasks:

1. Department will dewater and hose clean the clarifier. Contractor shall assume that they may need to do additional dewatering to remove up to three inches of residual wastewater as measured from the high point of clarifier tank finished floor elevation.

2. Department shall remove and return clarifiers to and from operational service.

3. Department shall remove and dispose of the existing mechanical process equipment as required to complete the structural rehabilitation defined under these Contract Documents. Mechanical process equipment to be removed by the Department in advance of the Work includes, but is not limited to, the following:

   a. Cross collector chains, flights, shafts, sprockets, and wear strips.

   b. Longitudinal chains, flights, shafts, sprockets, and wear strips.

4. The Contractor shall not be required to remove mechanical equipment left in place by the Department. In such instances, the Contractor shall cover with plastic sheeting or otherwise mask off and apply the coating system up to those existing tank features or as otherwise directed by Department. The exception to this is the existing weir plate, the front and back of which is scheduled to receive water pressure cleaning and coating application (except as noted in paragraph 1.04.B.9.g above). Mechanical equipment and internal tank features, which the Department

does not anticipate replacing and that the Contractor shall plan to mask off include the following:

a. Existing cross collector embedded floor slab T-rail.

b. Existing inlet port baffles.

c. Existing track supports at columns.

d. Existing longitudinal sludge collection system hold down track.

e. Existing scum trough beach plate.

f. Existing scum gates at influent channel end.

5. Department shall be responsible for the supply and installation of any and all mechanical process equipment and appurtenances.

6. Department shall be responsible for establishing a bypass, as may be required to facilitate completion of the scum collection trough Work.

7. Department shall be responsible for providing all functional and equipment acceptance testing, start-up field services, and commissioning of new Department-supplied equipment in accordance with manufacturer's recommendations.

1.06 WORKING CONDITIONS

A. On-site storage space is limited.

B. Sandblasting is required on any new steel installed to prepare the surface area for the coating application.

C. Certification in the application of the coating material is required with the bid to ensure proper application and a timely repair. The Department needs to have the structure repaired, coated and back in service promptly to meet operational needs.

D. Stripe coating is required at all corners and edges.

E. The allowable working hours are Monday through Friday between 7 am and 5 pm. If required by the Contractor's schedule, weekend working hours may be requested in advance for approval by the Department and the Engineer.

F. Contractor shall provide portable power for equipment, including but not being limited to, dewatering pumps, small tools, and lighting. Refer to Section 01120A, Sequence of Construction, for information on temporary electrical service requirements. The Contractor is required to use a floating water meter to measure the amount of water used. No charges will be made for the water used to perform the work.

G. All unusable materials and spills shall be removed from the premises immediately, and disposed of in an appropriate manner. Upon final completion, the Contractor shall thoroughly clean up all areas where work has been involved as mutually agreed with the Department.

H. Contractor shall provide temporary dewatering system with sufficient capacity to maintain the work area dry of water from works, weather, or overflow.

I. Prior to initiation of the Work, it may be necessary to remove residual wastewater from the clarifier. Contractor shall assume that up to three inches of residual wastewater as measured from the high point of the clarifier tank finished floor elevation may need to be removed. Coordinate with County for dewatering pump discharge location.

1.07 COMPLETION OF WORK

A. All work shall be performed in accordance with good commercial practice. The work schedule and completion dates shall be adhered to by the Contractor; except in such cases where the completion date will be delayed due to acts of nature, strikes, or other causes beyond the control of the Contractor. In these cases, the Contractor shall notify the County of the delays in advance of the original completion date so that a revised delivery schedule can be appropriately considered by the County.

B. Should an awarded Contractor of a spot market solicitation fail to complete the work within the number of days as stated in its offer, or the timeframe cited in the spot market solicitation, the County may terminate the order, secure the services of another contractor to complete the work, and/or terminate the Contract with the Contractor.

1.08 LICENSES, PERMITS AND RECORD KEEPING

A. The following is required of the awarded Contractor of a spot market solicitation in addition to the standard licenses, permits and fees requirements of the general terms and conditions:

1. Provide Department one copy of all applications, permits, reports, records and correspondence, within 30 calendar days of submission or receipt.

2. Maintain a file of the above items and make this file available for inspection by the County and County authorized representatives.

3. Maintain this file for the duration of the contract, plus five (5) years.

1.09 MANUFACTURER'S FIELD SERVICE TECHNICIAN SERVICES

A. The Contractor shall obtain the services of the Coating Manufacturer's Field Service Technician. The Coating Manufacturer's Field Service Technician shall provide inspection and written approval of surface preparation prior to application of the product, and shall provide a final inspection and written approval after the coating application.

SECTION 01010A

SUMMARY OF WORK

1.010 PRICING

A. Contractor shall supply all labor, materials, equipment and any other incidental items necessary to complete the services specified in the Contract Documents. No additional cost will be paid by the County.

1.011 PROTECTION OF PROPERTY

A. All existing structures, utilities, services, road, trees, shrubbery, etc., shall be protected against damage or interrupted services at all times by the Contractor during the term of this Contract; and the Contractor shall be held responsible for repairing or replacing property to the satisfaction of the County which is damaged by reason of the Contractor's operation on the property.

1.012 SAFETY

A. Contractor shall be required to provide 24 hours, 7 days a week Emergency Service to the Director under any subsequently awarded spot market competitions. Emergency Service shall be defined as a non-warranty related repair service requirement and its response time shall not exceed twenty-four (24) hours after notification by Director.

B. The Contractor shall provide suitable explosion proof blowers, as necessary to make up for any lack of ventilation and to provide comfortable working conditions for its personnel. No smoking or open flame shall be permitted in any areas within a tank or on the roof of the tank or any adjacent tanks.

C. The Contractor's personnel shall be in the vicinity of wastewater. The Contractor shall check with the Miami Dade County Health Department, and based on their recommendation, have its personnel properly immunized against disease.

D. Prior to any mobilization or other work on the site work being done, the Contractor shall be required to submit a specific Site Safety Plan outlining the work sequence for review and approval by the Department.

E. The Contractor shall coordinate with the Construction Manager to arrange mandatory Project Safety Management (PSM) training for all his personnel who will be onsite. This training must be completed prior to mobilization or any other work on site. The Contractor shall also be responsible that all on-site personnel of his subcontractors, at whatever tier, receive this training. Contact information for the Construction Manager will be provided upon award approval.

F. The Contractor must submit and obtain approval for a confined space entry plan prior to starting work. Continuous air monitoring of the clarifier tank is required for confined space work. The Contractor shall conduct continuous air monitoring when employees are working in the confined space. The Contractor shall also submit the Safety Data Sheets (SDS) for all chemicals, including coatings, that are brought onto the site and submit them as part of their confined space entry plan.

G. The Contractor must use warning devices such as traffic cones, barricades and warning lights to warn plant personnel of any hazard, as considered necessary by the County.

1.013 SUPERVISION

A. The Contractor shall employ a competent superintendent who shall be in attendance at the project site during the progress of the work. The superintendent shall be the primary representative for the Contractor and all communications given to and all decisions made by the superintendent shall be binding to the Contractor.

B. Notwithstanding, the superintendent shall be considered to be, at all times, an employee of the Contractor under its sole direction and not an employee or agent of the County.

1.014 WARRANTY

A. The warranty period for the coating installation shall be a minimum of three (3) years for defects in installation.

B. The warranty period from the protective coating manufacturer shall be a minimum three (3) years for defects in material.

1.015 COMPLIANCE WITH GOVERNMENT STANDARDS

A. All services to be purchased under this pool shall be in accordance with all governmental standards, to include, but not limited to, those issued by the American National Standards Institute (ANSI), the American Society for Testing Materials (ASTM), the Environmental Protection Agency (EPA), The Instrument Society of America (ISA), the International Standards Organization (ISO), Occupational Safety and Health Administration (OSHA), the National Institute of Occupations Safety Hazards (NIOSH), the National Sanitation Foundation (NSF), and the National Fire Protection Association (NFPA). Special attention is made to OSHA's 29CFR 1910 regulations relating to hazardous atmospheres in confined spaces. Submitters will be responsible for ventilation and Personal Protection Equipment (PPE) per OSHA requirements.

B. It shall be the responsibility of all submitters to be regularly informed and to conform to any changes in standards issued by any regulatory agencies during the term of this pool.

1.016 MIAMI-DADE COUNTY RESPONSIBLE WAGE ORDINANCE

A. Submitters are advised that the provisions of Miami-Dade County Code Section 2.11.16 will apply to any spot market solicitation awarded pursuant to this pool that exceeds $100,000. By submitting a response pursuant to these specifications, a submitter is hereby agreeing to comply with the provisions of Section 2.11.16, and to acknowledge awareness of the penalties for noncompliance. The supplemental general conditions and the Responsible Wages and Benefits Schedule can be found by accessing the following link: http://www.miamidade.gov/internalservices/small-business.asp (Heavy Construction). However, the spot market solicitation will include the applicable Responsible Wages and Benefits Schedule for the specific project. Submitter is advised

that the Wages and Benefits Schedule will be reviewed and increased, if appropriate, once a year, on January 1st. The rates for wages and benefits to be paid for work performed under this pool and during each subsequent calendar year will be the rate in effect on January 1st of the year in which the work is performed.

1.017 INDEMNIFICATION AND INSURANCE

A. The standard insurance requirements listed herein shall apply:

1. Commercial General Liability Insurance on a comprehensive basis in an amount not less than $1,000,000 combined single limit per occurrence for bodily injury and property damage. Miami-Dade County must be shown as an additional insured with respect to this coverage

2. Automobile Liability Insurance covering all owned, non-owned and hired vehicles used in connection with the work, in an amount not less than $1,000,000 combined single limit per occurrence for bodily injury and property damage.

PART 2 – PRODUCTS

2.01 PRODUCTS AND TESTING

A. Products Furnished by the Contractor

1. Protective coatings furnished shall be a modified epoxy or higher level of coating. Calcium aluminates will not be allowed. The concrete repair and patching material, underlayment and primer used shall be of the same manufacturer and/or compatible with the applied coating.

2. The type of protective coating shall be determined based on the application required in the spot market solicitation. This shall be determined by specific factors such as application, abrasion, adhesion, structure to be coated, allowable shut down time of facility, NSF approval for contact with drinking water, compatibility with existing coating for spot repairs, level of hydrogen sulfide gas, chemical resistance, bond strength, humidity level in enclosed spaces and other factors.

3. Severe Wastewater: ASTM- G210-13 Severe Wastewater Analysis Testing, ASTM D4227.

4. Qualification of Coating Applicators for Application of Coatings to Concrete Surfaces, ASTM D4228 Qualification of Coating Applicators for Application of Coatings to Steel Surfaces, ASTM D-4541 Test Method for Pull Strength of Coatings Using Portable Adhesion Testers.

5. Abrasion Resistance: ASTM D4060 Test Method for Abrasion Resistance, Tensile Strength ASTM D-638.

6. Compressive Strength ASTM D-695.

7. Contact with Drinking Water: NSF 61 Approval required for products in contact with drinking water.

B. Products Furnished by the Department

1. The Department will provide NO products for this Project. The Contractor shall provide all products, necessary tools, scaffolding, equipment, materials, and supplies.

2. The Contractor shall be responsible for the proper and necessary use of the materials in the performance of the work.

PART 3 - EXECUTION (NOT USED)

END OF SECTION

SECTION 01011A

SITE CONDITIONS AND PROTECTION OF EXISTING FACILITIES

PART 1 - GENERAL

1.01 SITE INVESTIGATION AND REPRESENTATION

A. The Contractor acknowledges that he has satisfied himself as to the nature and location of the work, the general and local conditions, particularly those bearing upon availability of transportation; disposal, handling and storage of materials; availability of labor, water, electric power, roads; disposal of water from construction; uncertainties of weather; the conformation and conditions at the ground; the type of equipment and facilities needed preliminary to and during the prosecution of the work and all other matters which can in any way affect the work or the cost thereof under this Contract.

B. The Contractor further acknowledges that he has satisfied himself as to the character, quality, and quantity of surface and subsurface materials to be encountered from inspecting the site and from evaluating information derived from exploratory work that may have been done by the Department or included with these Contract Documents. Any failure by the Contractor to acquaint himself with all the available information will not relieve him from responsibility for properly estimating the difficulty or cost thereof under this Contract.

C. The Contractor acknowledges that by personal field observation or other means satisfactory to himself, performed prior to the bid, he has included in the bid prices all costs for dealing with all construction problems created by observable above or on grade features on or adjacent to the site of the work whether or not these features are shown on the Plans or described in the Specifications. In instances where the observable features indicate subsurface conditions which may affect the Project work, as for example, a pavement patch or catch basin gratings indicating respectively a utility or storm sewer not shown on the Plans, the Contractor acknowledges that he has made timely, diligent, inquiry to the Engineer or by other means fully satisfied himself prior to the bid as to the nature of, and costs created by, the subsurface condition and included all costs therefore in the bid prices.

1.02 CONTRACTOR'S RESPONSIBILITY FOR UTILITY PROPERTIES AND SERVICE

A. Where the Contractor’s operation could cause damage or inconvenience to telephone, fiber optic, electrical power, oil, gas, water, sewer, irrigation system, or any other utility, the Contractor shall make all arrangements necessary for the protection of these utilities and services.

B. Notify all utility companies that are affected by the construction operation at least 48 hours in advance. Under no circumstance expose any utility without first obtaining permission from the appropriate agency. Once permission has been granted, locate, expose, and provide temporary support for all existing underground utilities and utility poles where necessary. Absolutely no extra compensation will be allowed for construction problems created by utility poles of whatever size, overhead electric,

telephone or other lines, whether shown on the Plans or not. The Contractor is solely responsible for discerning such items in the field prior to bidding and including all costs for such work in the bid prices.

C. The Contractor and his/her subcontractors shall be solely and directly responsible to the owners and operators of such properties for any damage, injury, expense, loss, inconvenience, delay, suits, actions, or claims of any character brought because of any injuries or damage, which may result from the construction operations under this Contract.

D. Replace, with material approved by the Engineer, at Contractor's expense, any and all other laterals, existing utilities or structures removed or damaged during construction, unless otherwise provided for in these Contract Documents and as approved by the Engineer.

1.03 LAWN AREAS

A. Lawn or landscaped areas damaged during construction shall be repaired to match the pre-construction condition to the satisfaction of the Department.

PART 2 - PRODUCTS (NOT USED)

PART 3 - EXECUTION (NOT USED)

END OF SECTION

SECTION 01015A

INDEX OF DRAWINGS

PART 1 - GENERAL

1.01 CONTRACT DRAWINGS

A. Plans indicated as being **ISSUED FOR BID**, and any subsequent revision thereto introduced by Addenda prior to Bid, showing the work of the Contract are hereby made a part of the Contract Documents and are listed as follows:

CDWWTP Plant 1 Clarifier Basin No. 3 Structural Rehabilitation – Consent Decree 2.07(3)

G001	COVER SHEET
C001	GENERAL LEGEND, LIST OF ABBREVIATIONS, DRAWING NOTES & SITE PLAN
S001	CLARIFIER FACILITY - OVERALL LOWER & UPPER PLANS
S002	CLARIFIER BASIN NO. 3 - LOWER PLAN
S003	CLARIFIER BASIN NO. 3 - UPPER PLAN
S004	CLARIFIER BASIN NO. 3 - SECTION A
S005	CLARIFIER BASIN NO. 3 - SECTION B
S006	CLARIFIER BASIN NO. 3 - SECTION C
S007	CLARIFIER BASIN NO. 3 - SECTIONS D & E
S008	CONCRETE REPAIR DETAILS

B. Due to the possibility of typing errors or omissions, the above list shall not be considered as necessarily complete, nor shall the Standard Details which may be included elsewhere herein be considered as forming a complete listing of all Standard Details which may apply to this Project. Perform all work shown on all sheets of the Plans, as specified herein or necessary for a complete functional installation and no extra compensation will be made due to the omission or incorrect listing of a Drawing in this Section**.** The Contractor shall field investigate and verify as necessary for this work prior the construction**.**

PART 2 - PRODUCTS (NOT USED)

PART 3 - EXECUTION (NOT USED)

END OF SECTION

SECTION 01025A

MEASUREMENT AND PAYMENT

PART 1 - GENERAL

1.01 THE SUMMARY

A. The Contractor shall receive and accept the compensation as provided in the Proposal, the Contract, and Section 01370A, Schedule of Values, as full payment for furnishing all labor, materials, tools and equipment, for performing all operations necessary to complete the work under this Contract, and also in full payment for all loss or damages arising from the nature of the Work, or from the action of the elements or from unforeseen difficulties which may be encountered during the execution of the work until the final acceptance by the Department.

The cost breakdown (or schedule of values) referred to herein is defined in Section 01370A, Schedule of Values. The cost breakdown (schedule of values) approved by the Engineer will be used as the basis for making progress payments and for determining the cost of extra work which is the same or similar (as determined by the Engineer) to that defined in the schedule of values.

B. The prices stated in the Bid include full compensation for overhead and profit, all costs and expenses for taxes, labor, equipment, furnishing and repairing small tools and ordinary equipment, mobilization, home office expenses and general supervision, materials, commissions, transportation charges and expenses, patent fees and royalties, bond, insurance, labor for handling materials during inspection, together with any and all other costs and expenses for performing and completing the work as shown on the Contract Drawings and specified herein. In addition, the Contractor shall include the actual cost of social security taxes, unemployment insurance, worker's compensation, fringe benefits, inclusive of life and health insurance, union dues, pension, pension plans, vacations, and insurance and Contractor's public liability and property damage insurance involved in the work based on the actual wages paid to such labor and all other general costs and profits, prorated to each Item.

C. Unless otherwise specifically stated elsewhere herein, the Contractor shall include in the prices bid all materials, electrical supply, fuel, lubricants, temporary equipment, temporary wiring, temporary piping and fittings, pumps, gages, and all other items of whatever nature required to completely test, balance, disinfect if required, and put into fully operational condition all equipment and/or systems supplied by either the Department or the Contractor and installed as a part of this Project. Further, any test materials supplied by the Contractor shall be completely satisfactory to the Department. Any decision as to whether a particular material is suitable for test purposes shall be at the sole discretion of the Engineer whose decision shall be final. Any material considered not suitable shall be immediately replaced by the Contractor with suitable material and no extra compensation will be allowed.

D. It is the intent of the Department to obtain a complete and working installation under this Contract, and any items of labor, equipment or materials which may reasonable be assumed as necessary to accomplish this end shall be supplied whether or not they are specifically shown on the Plans or stated herein.

1.02 PRICES BID

A. The price bid for each item shall be stated in both words and figures in the appropriate places in the Bid form. All blank spaces for bid prices must be filled in with ink, or with a typewriter. The Bidder is further directed that any and all alterations, changes, corrections and modifications, made to the Bid forms prior to submission of bids, must be initialed by the Bidder. Non-compliance by the Bidder of this directive may be grounds for rejection of his bid.

B. In the event that there is a discrepancy between the price written in words and the price written in numbers, the price written in words shall govern except where the number of units multiplied by the unit price shown in numbers equals the total price for that bid item. In such case the unit price shown in numbers shall govern over the unit price shown in words.

C. Where an error is made in the calculation of the total bid price of an item, the unit price shall govern.

D. If the bidder makes an error in his addition of the total bid prices of the applicable items in the Bid, the correct sum of its applicable bid item totals shall be the Total Bid.

E. It has been determined that the Department is not exempt from the payment of Florida State Sales Tax under this Contract. All items of materials, equipment and supplies furnished by the Contractor and remaining a part of the completed Project are subject to this Tax. The Bidder shall include a sufficient amount of money to pay for this Tax in his bid price. Sufficient money to pay the Tax for all miscellaneous materials and minor items shown on the Plans, specified herein, or necessary for the work, and which will remain a part of the completed Project, shall also be included in the price or prices bid, and no other compensation will be provided.

1.03 PAYMENT ITEMS

A. **Item No. 1 – Mobilization**

For performing preparatory work including setting up temporary facilities, preparing shop drawing submittals, and the mobilization to the Project site of the Contractor's construction equipment, supplies, materials, personnel, safety equipment and first aid supplies, etc.

This item will also include the costs of permits, required insurance, and other pre-construction expenses, and will exclude the costs of materials, which are paid under other bid items.

1. No actual construction or land disturbance may be performed at the site until the work of this item has been successfully completed unless specific written approval by the Engineer is granted for said work. Such permission by the Engineer will only be granted if all bond and insurances are in place and a complete price together with construction duration for those items of work has been supplied by the Contractor and approved by the Engineer.

2. The mobilization item will be paid for in one (1) payment. The payment will correspond to the first payment request and is conditioned upon progress satisfactory to the Engineer being made pursuant to the accepted Project schedule.

3. The value of Item 1 shall be no greater than 5% of the total bid price.

4. The combined value of Items 1 and 14 shall not exceed ten percent (10%) of the total bid price.

5. Any remaining amount will be paid upon completion of all work on the Contract. Retainage and any Special Provisions will apply to these payments.

B. **Item 2 – Water Pressure Cleaning**

For dewatering residual wastewater and pressure washing interior tank surfaces scheduled to receive the work.

Measurement: The quantity to be paid for under this Item shall be the actual square footage of interior concrete tank surface receiving cleaning, as determined by the Engineer.

Payment: No payment under this item shall be made for cleaning not ordered by the Engineer. Payment under this item shall be made at the unit price bid per square foot as measured by the Engineer, which shall be full payment for work under this item.

C. **Item 3 – Chemical Cleaning for Efflorescence Removal**

For providing all labor, materials, tools, plant, and equipment necessary and required to chemically clean for efflorescence removal, as specified.

Measurement: The quantity to be paid for under this Item shall be the actual square footage of interior concrete tank surface chemically cleaned for efflorescence removal, as determined by the Engineer.

Payment: No payment under this item shall be made for chemical cleaning for efflorescence removal not ordered by the Engineer. Payment under this item shall be made at the unit price bid per square foot as measured by the Engineer, which shall be full payment for work under this item.

D. **Item 4 – Abrasive Blasting / Ultra-high Pressure Jetting / Mechanical Surface Preparation**

For surface preparation including abrasive blast cleaning, high/ultra-high pressure jetting, and/or mechanically cleaning surfaces scheduled to receive the work.

This Item also includes providing environmental controls, storage, and proper disposal of cleaning residue and removed coatings in accordance with all applicable regulations, providing all necessary dehumidification, ventilation, illumination, associated work inside the tank, and protection of existing conditions.

Measurement: The quantity to be paid for under this Item shall be the actual square footage of interior concrete tank surface receiving surface preparation, as determined by the Engineer.

Payment: No payment under this item shall be made for surface preparation not ordered by the Engineer. Payment under this item shall be made at the unit price bid per square foot as measured by the Engineer, which shall be full payment for work under this item.

E. **Item No. 5 – Type 1 Concrete Repairs**

For providing all labor, materials, tools, plant, and equipment necessary and required to remove deteriorated concrete from areas of minor damage (unsound concrete less than or equal to 3/4”

deep), sawcut repair areas square, and provide and install new concrete repair mortar as specified and detailed on the Contract Drawings.

Measurement: The quantity to be paid for under this Item is the actual area measured in square feet, of deteriorated concrete area repaired to the specified depth, as shown on the Contract Drawings, or as ordered and directed by the Engineer.

Payment: The unit price bid for this Item shall be full compensation as shown and specified. Payment for the work under this Item shall be made at the actual number of square feet repaired, as shown, specified, and directed and shall be full payment for the work under this Item.

F. **Item No. 6 – Type 2 Concrete Repairs**

For providing all labor, materials, tools, plant, and equipment necessary and required to remove spalled concrete from areas of damage (unsound concrete greater than 3/4" deep, but less than 1 ½" deep with no exposure of underlying reinforcement), sawcut repair areas square, and provide and install new concrete repair mortar as specified and detailed on the Contract Drawings.

Measurement: The quantity to be paid for under this Item is the actual area measured in square feet, of spalled concrete area repaired to the specified depth, as shown on the Contract Drawings, or as ordered and directed by the Engineer.

Payment: The unit price bid for this Item shall be full compensation as shown and specified. Payment for the work under this Item shall be made at the actual number of square feet repaired, as shown, specified, and directed and shall be full payment for the work under this Item.

G. **Item No. 7 – Type 3 Concrete Repairs**

For providing all labor, materials, tools, plant, and equipment necessary and required to remove spalled concrete from areas of damage with exposure of steel reinforcement, remove and splice in new reinforcement bars, sawcut repair areas square, and provide and install new concrete repair mortar as specified and detailed on the Contract Drawings.

Measurement: The quantity to be paid for under this Item is the actual area measured in square feet, of spalled concrete area repaired to the specified depth, as shown on the Contract Drawings, or as ordered and directed by the Engineer.

Payment: The unit price bid for this Item shall be full compensation as shown and specified. Payment for the work under this Item shall be made at the actual number of square feet repaired, as shown, specified, and directed and shall be full payment for the work under this Item.

H. **Item No. 8 – Crack Repair using Gravity-fed Grouting**

For providing all labor, materials, tools, plant, and equipment necessary and required to repair dry horizontal concrete surface cracks (less than ¼" wide) using gravity-fed epoxy grouting, as specified and shown on the Contract Drawings.

Measurement: Quantities paid for under this item shall be the actual linear footage of crack repair using gravity-fed grouting as determined by the Engineer.

Payment: No payment under this item shall be made for crack repair using gravity-fed grouting not ordered by the Engineer. Payment under this item shall be made at the unit price bid per linear foot as measured by the Engineer, which shall be full payment for work under this item.

I. **Item No. 9 – Crack Repair using Pressure-injection Grouting**

For providing all labor, materials, tools, plant, and equipment necessary and required to repair leaking horizontal or vertical concrete surface cracks (less than ¼" wide) using pressure-injection grouting, as specified and shown on the Contract Drawings.

Measurement: Quantities paid for under this item shall be the actual linear footage of crack repair using pressure-injection grouting as determined by the Engineer.

Payment: No payment under this item shall be made for crack repair using pressure-injection grouting not ordered by the Engineer. Payment under this item shall be made at the unit price bid per linear foot as measured by the Engineer, which shall be full payment for work under this item. For payment purposes, no distinction shall be made between leaking cracks or vertical cracks and dry horizontal cracks.

J. **Item No. 10 – Resurfacing of Concrete Surfaces**

For resurfacing of concrete surfaces schedule to receive the work. All surfaces scheduled to receive the proposed epoxy coating system shall be resurfaced, with the exception of the floor surface, to support the application of a fully warranted epoxy coating system.

Measurement: The quantity to be paid for under this Item shall be the actual square footage of interior concrete tank surface receiving resurfacing as determined by the Engineer.

Payment: No payment under this item shall be made for resurfacing not ordered by the Engineer. Payment under this item shall be made at the unit price bid per square foot as measured by the Engineer, which shall be full payment for work under this item.

K. **Item 11 - Epoxy Coating System Application**

For application of the specified coating system for surfaces schedule to receive the work. This Item also includes providing coating system testing.

Measurement: The quantity to be paid for under this Item shall be the actual square footage of interior concrete tank surface receiving coating system application, as determined by the Engineer.

Payment: No payment under this item shall be made coating system application not ordered by the Engineer. Payment under this item shall be made at the unit price bid per square foot as measured by the Engineer, which shall be full payment for work under this item.

L. **Item No. 12 – Floor Transverse Joint Repair**

For providing all labor, materials, tools, plant, and equipment necessary and required to remove spall concrete at floor slab construction joints and to provide and install joint filler, concrete repair mortar, and joint sealant, as specified and shown on the Contract Drawings.

Measurement: Quantities paid for under this item shall be the actual linear footage of floor construction joint repair, as determined by the Engineer.

Payment: No payment under this item shall be made for floor construction joint repair not ordered by the Engineer. Payment under this item shall be made at the unit price bid per linear foot as measured by the Engineer, which shall be full payment for work under this item.

M. **Item No. 13 – Joint Sealant Replacement**

For providing all labor, materials, tools, plant, and equipment necessary and required to remove existing sealant and to provide and install replacement joint sealant at all existing walkway and deck joints, wall and interior column joints, floor joints and any other sealed joints, as specified and shown on the Contract Drawings.

Measurement: Quantities paid for under this item shall be the actual linear footage of joint receiving sealant installation as determined by the Engineer.

Payment: No payment under this item shall be made for joint sealant installation not ordered by the Engineer. Payment under this item shall be made at the unit price bid per linear foot as measured by the Engineer, which shall be full payment for work under this item.

N. **Item No. 14 – Closeout:** For all remaining work after Substantial Completion, including performing final cleanup and addressing punch list items as identified by the Engineer and/or Department.

The value of Item 14 shall be a minimum of 5% of the total bid price.

The combined value of Items 1 and 14 shall not exceed ten percent (10%) of the total bid price.

Since this item is bid as an aggregate sum, payment will be in accordance with the cost breakdown (Schedule of Values) as approved by the Engineer and measured as required by and satisfactory to the Engineer.

1.04 PAYMENT

A. General: Progress payments will be made monthly.

B. Payment for all Work shown or specified in the Contract Documents is included in the Contract Price. No measurement or payment will be made for individual items.

C. Payment for Lump or Aggregate Sum Work covers all Work specified or shown within the limits or Specification sections.

1.05 NONPAYMENT FOR REJECTED OR UNUSED PRODUCTS

A. Payment will not be made for following:

1. Loading, hauling, and disposing of rejected material.

2. Quantities of material wasted or disposed of in manner not called for under Contract Documents.

3. Rejected loads of material, including material rejected after it has been placed by reason of failure of Contractor to conform to provisions of Contract Documents.

4. Material not unloaded from transporting vehicle.

5. Defective Work not accepted by Department.

6. Material remaining on hand after completion of Work.

1.06 PARTIAL PAYMENT FOR STORED MATERIALS AND EQUIPMENT

A. Partial Payment: Partial payments will be made in accordance with the Contract Documents. Partial payments will only apply to material actually incorporated into the Work.

B. Final Payment: Will be made only for materials incorporated in Work.

1.07 FINAL APPLICATION FOR PAYMENT

A. Prior to submitting final application, make acceptable delivery of required documents, and other requirements as specified in Section 01700A, Contract Closeout.

B. Final payment shall be subject to the conditions and requirements included in the Contract Documents.

PART 2 - PRODUCTS (NOT USED)

PART 3 - EXECUTION (NOT USED)

END OF SECTION

SECTION 01090A

REFERENCE STANDARDS

PART 1 - GENERAL

1.01 SUMMARY

A. Comply with the requirements of standard with date as specified herein, or most recent revision or edition. Standards without dates shall be understood as the Standard current at the time of bid. In case of conflict between the referenced standards, the one having the more stringent requirements shall govern.

B. In case of conflict between the referenced standards and the Contract Documents, the Contract Documents shall govern.

C. When no reference is made to a code, standard, or specification, the standard specifications of the ASTM, the ANSI, the ASME, the IEEE, or the NEMA shall govern.

1.02 ABBREVIATIONS

AA:	Aluminum Association.
AAMA:	Architectural Aluminum Manufacturer's Association.
AASHTO:	American Association of State Highway & Transportation Officials.
ACI:	American Concrete Institute.
AGA:	American Gas Association.
AGMA:	American Gear Manufacturer’s Association.
AIEE:	American Institute of Electrical Engineers (Now IEEE).
AISC:	American Institute of Steel Construction.
AISI:	American Iron and Steel Institute.
ANSI:	American National Standards Institute.
API:	American Petroleum Institute.
ASCE:	American Society of Civil Engineers.
ASME:	American Society of Mechanical Engineers.
ASTM:	American Society for Testing and Materials.
AWPA:	American Wood Preservers Association.
AWS:	American Welding Society.
AWWA:	American Water Works Association.
CIPRA:	Cast Iron Pipe Research Association.
DIPRA:	Ductile Iron Pipe Research Association.
DOT or FDOT	Florida Department of Transportation.
EPA:	Environmental Protection Agency (U.S.).
FED. SPEC.:	Federal Specification.
FBC:	Florida Building Code.
IEEE:	Institute of Electrical and Electronic Engineers.
ISA:	Instrument Society of America.
NBS:	National Bureau of Standards.
NCPI:	National Clay Pipe Institute.
NEC:	National Electrical Code.
NEMA:	National Electrical Manufacturer's Association.

REFERENCE STANDARDS

NESC:	National Electric Safety Code.
NEWWA:	New England Water Works Organization.
NFPA:	National Fire Protection Association.
NLMA:	National Lumber Manufacturers Association.
NSF:	National Sanitation Foundation.
OSHA:	U.S. Department of Labor, Occupational Safety and Health Association.
SAE:	Society of Automotive Engineers.
SHBI:	Steel Heating Boiler Institute.
SSPC:	Steel Structures Painting Council.
TCA:	Tile Council of America.
UL:	Underwriter's Laboratories, Inc.

A. The above list shall not be considered complete, as there are other "Standards" used; however, in most cases complete titles have been given.

B. Wherever "Standards" are indicated herein for reference, the referenced portion shall have the same force and effect as if it were included herein in its entirety, latest revision if date of publication not shown.

C. When used within these specification: ”Owner, County, or Department” shall mean the Miami-Dade Water and Sewer Department; “Director” shall mean the Director of the Miami-Dade Water and Sewer Department; and “Engineer” shall mean the Chief, Engineering Division of the Miami-Dade Water and Sewer Department, or an authorized representative.

PART 2 - PRODUCTS (NOT USED)

PART 3 - EXECUTION (NOT USED)

END OF SECTION

SECTION 01120A

SEQUENCE OF CONSTRUCTION

PART 1 - GENERAL

1.01 THE SUMMARY

A. Before commencement of any work, in compliance with the requirements of Section 01150A, Project Schedule, Meetings and Reports, submit to the Engineer for approval a detailed sequence of construction, clearly showing the interrelationship and the interdependency of work activities with one another.

B. Coordinate sequence of construction with progress schedule to ensure timely performance of the work and project completion within the specified construction time.

1.02 GENERAL NOTES

A. Contractor personnel working at the CDWWTP are required to pass a background check and obtain a WASD ID Badge. Refer to Appendix C for WASD ID Security Procedures for non-WASD Employees. Subcontractors who work for more than 5 days within a 90-day period are also required to obtain the security background check and identification. The Contractor's personnel shall obtain all background checks and ID Badges prior to onsite mobilization. Refer to Section 01150A, Project Schedule, Meetings and Reports and Section 01350A, Site Security, for additional information.

B. Following Issuance of Purchase Order in connection with the work, the Contractor shall notify the Department at least five (5) days before he is ready to start actual construction, to allow the Department time to make arrangements for inspection of the work.

C. The Contractor’s equipment must be in first class operating condition. All equipment must be properly lubricated on a special maintenance type schedule to reduce noise, including tracks, rollers, idlers, sheaves and other noise producing components. Care must be taken to prevent oil spillage of any kind or oil dripping from equipment. The Contractor shall provide a temporary electric service for his electric equipment as specified herein below, and shall pay all cost thereof, including all charges for electricity used during the entire course of the Project until its acceptance by the Department.

D. If the equipment used proves less than satisfactory and is unduly or needlessly disturbing the plant operations and staff, in the opinion of the Engineer, he will have the right to order the Contractor to immediately modify the equipment to make it satisfactory, or to change to other equipment that is satisfactory at no additional cost to the Department.

E. During construction the Contractor shall, by sprinkling with water or by other means approved by the Engineer, eliminate dust annoyance to plant staff. No additional compensation will be paid to the Contractor for any costs incurred in complying with the provisions herein.

F. Existing valves shall only be operated by Department personnel. The Contractor's personnel, under no circumstances, shall operate any such valve. This shall also apply to valves installed during the project which are put into service prior to final acceptance (i.e. part of the project is activated).

G. All items shall be performed by the Contractor with special emphasis on the fact that numerous standard and miscellaneous construction phases are not mentioned specifically, but shall be performed by the Contractor as required for a completed Project.

H. The Contractor shall fully comply with all requirements of the Permits, at no additional cost to the Department. Working hours noted in permits or the Specifications are subject to change. In the event that changed working hours affect the work of the Contractor, the Contractor’s sole remedy shall be a non-compensable time extension. Said extension to be full compensation for all direct and indirect costs, including but not limited to loss of efficiency, loss of opportunity, increased bond or insurance premiums, or home office or extended overhead, incurred by the Contractor as a result of such change, and no additional compensation shall be considered. Night work may be required as a part of the construction.

1.03 SCHEDULING

A. Time is of the essence in the completion of the Work.

B. Contractor shall be responsible for overall coordination and scheduling of work performed.

C. The allowable working hours are Monday through Friday between 7 am and 5 pm. If required by the Contractor’s schedule, weekend working hours may be requested in advance for approval by the Department and the Engineer.

D. Construction activities must be scheduled with seasonal considerations in mind. Clarifier tanks shall not be permitted to be removed from operational service within the wet season. For the purposes of these Contract Documents, the wet season shall be defined as the period beginning on May 31 and ending on November 1.

E. Only one clarifier may be removed from operational service at any given time.

F. The Contractor shall provide all temporary stop logs, stop logs, plus, or bulkheads necessary to facilitate the Work.

G. The Department shall be responsible for removing a clarifier from operational service and for returning a clarifier to operational service in accordance with the Department's Standard Operating Procedures. The removal of a clarifier from service requires approximately one calendar day to complete. The return of a clarifier to service requires approximately one calendar day to complete. Contractor shall consider this during formulation of his bid.

H. Each clarifier may only be removed from operational service once during the project. The Contractor shall be allowed a duration of 135 consecutive calendar days to complete the Work to Substantial Completion following Department approval of the project-specific safety plan.

1. This duration is exclusive of the 45 days following Issuance of Purchase Order during which the Contractor shall develop, submit, and receive approval of a project-specific site safety plan and construction schedule and shall perform background checks and obtain ID badges for all employees and sub-contractor personnel that may come on site. The Department shall remove the clarifier from operational service, drain, dewater, and perform mechanical equipment demolition.

2. This duration includes mobilization and shall begin immediately after the 45-day pre-mobilization window has elapsed and on-site Work has been authorized by the Department.

3. This duration is exclusive of the 30 days between Substantial Completion and Final Completion.

4. This duration is exclusive of the time in which new mechanical equipment is installed, tested, and commissioned by the Department and the time required to return of the clarifier to operational service by the Department.

I. Not until a clarifier has been accepted by the Department shall the Contractor request to remove the next scheduled clarifier from operational service (if applicable). This requirement shall only apply if the Contract includes work on more than one clarifier.

J. The time allowed between prime and top coats is a maximum of 30 days and a minimum of 24 hours. The time allowed between pressure cleaning and primer is 24 hours or less.

K. The Department shall remove the clarifier mechanical equipment within 45 calendar days from the date of Issuance of Purchase Order and before Contractor mobilization to the Site.

L. The Department shall be responsible for the supply of replacement sludge collection equipment. It is anticipated that the new sludge collection equipment will be available for installation by Department no sooner than 6 weeks from the date of completion of existing equipment removal.

M. The Department shall be responsible for the installation of the replacement sludge collection equipment upon delivery to Site. This shall take place after completion of the structural rehabilitation and application of protective coatings by Contractor and prior to the return of the clarifier to operational service.

1.04 CONSENT DECREE CONSTRUCTION MILESTONE DATES

A. This construction Project forms part of the compliance strategy for meeting the Consent Decree Compliance Date schedule requirements. Several construction schedule milestone dates have been determined to be critical for the completion of this Contract. Some of these milestones have either Consent Decree (CD) Liquidated Damages or Contract Liquidated Damages or both as defined under Special Provisions Section SP 3.0 of these Contract Documents.

1.05 SEQUENCE OF CONSTRUCTION

A. The proposed general sequence of construction (progression) is provided below. Calendar day completion dates for each Milestone are provided under the Special Provisions. The Contractor shall be responsible for developing a detailed sequence of construction and schedule for review and approval by the Engineer before any work is started. The Department reserves the right to make changes to the sequence as necessary to facilitate the work or minimize any conflict with operations.

B. At the end of the Sequence of Construction and also as part of the Schedule of Values submittal, the Contractor shall clearly indicate the list of activities that will define the 50% construction completion milestone. This list will be reviewed and approved by the Engineer.

<u>Sequence of Construction:</u>

MILESTONE 1

1. As required by Section 01150A, Project Schedule, Meetings and Reports, submit a preliminary schedule of Contractor submittals, a list of permits and licenses to be obtained by Contractor, a preliminary schedule of values in accordance with Section 01370A, Schedule of Values, a layout of temporary facilities and field offices (if required), a Project-Specific Site Safety Plan, and a Construction Schedule Bar Chart.

2. Obtain background checks and employee ID badges.

3. Submit shop drawings for review and approval, prioritizing those items required for permitting (if applicable), items on the critical path, items with long lead times, and those items that will be installed early in the construction sequencing.

4. Apply for and obtain all required permits, where applicable.

5. Department to remove clarifier from operational service.

6. Department to drain and dewater tank and bulkhead/plug connections as required to prevent leakage.

7. Department to complete selective demolition of existing sludge collection equipment.

MILESTONE 2

1. Contractor mobilization.

2. The proposed construction sequence for the clarifier no. 3 rehabilitation shall be as follows:

    i. Procure materials.

    ii. Water pressure wash interior tank concrete surfaces.

    iii. Chemically clean for efflorescence removal.

    iv. Abrasive blast clean, high/ultra-high pressure jet, and/or mechanically clean surfaces scheduled for new coating system. Remove Rhino Lining, where applicable.

    v. Collect and dispose of abrasive grit, debris, and residue.

    vi. Inspect concrete surfaces and document.

    vii. Complete concrete repairs, floor construction joint repairs, concrete resurfacing, crack injection grouting, and all other repairs detailed or described in these Contract Documents.

    viii. Inspect resurfaced concrete surfaces and document.

    ix. Complete all epoxy protective coating system application.

    x. Install new joint sealant at elevated walkway joints, wall joints and expansion joints at interior columns.

3. Schedule in coordination with the Department, Engineer, Contractor, and epoxy coating system manufacturer representative the Substantial Completion Inspection.

4. Complete all Punch List items from the Substantial Completion Inspection.

5. Upon acceptance, the Work at Clarifier No. 3 shall be deemed Substantially Complete, and the facility handed back to the Department for Beneficial Use.

SECTION 01120A

SEQUENCE OF CONSTRUCTION

MILESTONE 3

1. Submit final As-built drawings.

2. Final cleanup.

3. Final Completion and project closeout.

4. Department to install, test, start-up, and commission new mechanical process equipment.

5. Department to return clarifier to operational service.

C. The proposed sequence of construction refers to Clarifier No. 3, but the same sequence shall generally apply to any other clarifiers included under this Contract.

D. In performing the work in the above-described sequence, all requirements of the Specifications shall be strictly followed; particularly those pertaining to tests and cleanup as the work progresses.

PART 2 - PRODUCTS (NOT USED)

PART 3 - EXECUTION (NOT USED)

END OF SECTION

SECTION 01150A

PROJECT SCHEDULE, MEETINGS AND REPORTS

PART 1 – GENERAL

1.01 THE SUMMARY

A. The Contractor shall schedule the Work in accordance with the requirements set forth in the Contract. The Contractor shall have discretion in scheduling the Work. The Department may require that a detailed schedule be submitted for review and acceptance. Such schedule shall be submitted to the Department no later than ten (10) calendar days after the issuance of the Purchase Order. The Department reserves the right to require such information from the Contractor as may be necessary to determine the accuracy of the progress schedule. Where the Department requires such schedules the Contractor shall create the schedule utilizing Microsoft Project or compatible software. The Department shall be furnished with copies of the schedules as often as deemed necessary by the Department in both paper and disk formats. The Department's basis for not accepting any schedule shall be limited to a determination that the Work sequence lacks logic, is unreasonable, is incomplete or is inconsistent with any other contractual requirements, such as a phasing plan or time for completion.

B. This schedule shall be updated prior to the Contractor submitting his request for payment, showing actual progress versus scheduled. The Department and the Contractor will review this update to analyze the project progress and allocate responsibility if the project is behind schedule. Should the Contractor fail to update and submit the schedule, as required, he/she shall not be entitled to any delay claims for that period and the request for payment may be delayed pending satisfaction of this requirement.

C. With respect to any submission by the Contractor under this paragraph, no review, acceptance or approval by the Department shall release or relieve the Contractor from its obligation to fully and properly complete the Project, or any other duty, responsibility or liability imposed on it under the Contract, including, but not limited to the obligation to complete the Work within the time set forth in the applicable Contract.

D. Receipt by the Department of an updated or revised schedule shall not be construed to mean that the Department agrees that the progress of the Work is as shown or indicated therein or that the updated or revised schedule is acceptable to the Department.

E. Any reference in this section to the Contractor shall be deemed to include suppliers, and permitted subcontractors, whether or not in privates of contract with the Contractor for the purpose of this section.

F. The Contractor's schedule shall include sufficient "weather days" within the construction schedule to allow for normal weather delays expected in South Florida during each month of the construction period, and for which the Contractor will not be entitled to an extension of time. This can be achieved by including additional duration for weather days in the individual activities, or through a single "Weather Day" activity at the end of the

construction schedule's critical path.

G. A "weather day" is defined as a normal work day during which the Contractor was unable to perform work for a continuous period of four (4) hours during the day. The Contractor must submit a record of each rain delay within three (3) days of the event.

H. The request for a schedule time extension shall be made within ten (10) calendar days after the time when the Contractor knows or should have known of any cause for which it may claim an extension of time and shall provide any actual or potential basis for an extension of time, identifying such causes and describing, as fully as practicable at that time, the nature and expected duration of the delay and its effect on the completion of that part of the Work identified in the request. The Department may require the Contractor to furnish such additional information or documentation, as the Department shall reasonably deem necessary or helpful in considering the requested extension.

I. The Contractor shall not be entitled to an extension of time unless the Contractor affirmatively demonstrates that it is entitled to such extension.

J. The Department shall endeavor to review and respond to the Contractor's request for a schedule time extension in a reasonable period of time; however, the Contractor shall be obligated to continue to perform the Work required regardless of whether the Department has issued a decision or whether the Contractor agrees or disagrees with that decision.

K. If the Contractor is delayed at any time during the progress of the Work beyond the Completion Dates set forth in the Contract by the neglect or failure of the County or by a Force Majeure, then the Completion Dates and/or Notice of Award shall be extended by the County subject to the following conditions:

1. The cause of the delay arises after issuance of the Contract and could not have been anticipated by the Contractor by reasonable investigation before proceeding with the Work.

2. The Contractor demonstrates that the completion of the Work will be actually and necessarily delayed.

3. The effect of such cause cannot be avoided or mitigated by the exercise of all reasonable precautions, efforts and measures whether before or after the occurrence of the cause of delay.

1.02 PRE-CONSTRUCTION MEETING

A. The Department may require the Contractor and the Contractor's subcontractor(s) to attend a meeting to review the scope of work, the method of performance, and any other issues related to the site.

B. The Department will record significant issues discussed at the meeting and record agreements and disagreements, along with the final plan of action, and distribute a record of the meeting to all parties in attendance.

1.03 PROGRESS MEETINGS

A. When necessary, progress meetings will be held by the Department. Present at these meetings shall be the Contractor, the Department, the Engineer, if applicable, and invitees associated with the Project, as identified by the Department.

B. The Contractor shall arrange for the participation of its subcontractors and/or vendors when the Department requires their presence.

C. The Department shall maintain minutes of the meeting and distribute copies of the minutes to all parties in attendance.

PART 2 – PRODUCTS (NOT USED)

PART 3 – EXECUTION (NOT USED)

END OF SECTION

SECTION 01340A

SHOP DRAWINGS, PRODUCT DATA, AND SAMPLES

PART 1 - GENERAL

1.01 DESCRIPTION OF WORK

A. Submit to the Engineer for review and approval, such shop drawings, test reports and data on materials, equipment, and material samples as are required for the proper control of work, and as specified in the individual Specification sections. Shop drawings shall be submitted for all materials and equipment to be furnished.

B. Submit to the Engineer a complete list of preliminary data on items for which shop drawings are to be submitted as required by the Specifications. Included in this list shall be the names of all proposed manufacturers furnishing specified items. Review of this list by the Engineer shall in no way expressed or implied relieve the Contractor from submitting complete shop drawings and providing materials, equipment, etc., fully in accordance with the Specifications. This procedure is required in order to expedite final review of shop drawings.

C. Maintain an accurate updated shop drawing submittal log which shall include the following items:

1. Submittal-Description and Number assigned.

2. Specification Section.

3. Drawings Sheet Number.

4. Date to Engineer.

5. Date returned to Contractor (from Engineer).

6. Status of Submittal (Approved, Approved as Noted, Rejected/Resubmit).

7. Date of Resubmittal and Return (as applicable).

8. Date material release (for fabrication).

9. Projected date of fabrication (as applicable).

10. Projected date of delivery to site.

11. Status of O&M manuals submittal (as applicable).

1.02 CONTRACTOR'S RESPONSIBILITY

A. The Contractor shall submit shop drawings to the Engineer for approval in accordance with the requirements of this Specification. No less than seven (7) hard copies and one

(1) electronic PDF copy shall be submitted. The Engineer will retain five (5) sets and two (2) will be returned to the Contractor.

B. Shop drawings shall be submitted for all materials and equipment to be furnished.

C. Shop drawings shall be submitted prior to any project construction activity. In a timely fashion, well before the contemplated ordering for fabrication of special order or long lead time items or construction use of any standard element of the work, the Contractor shall furnish shop drawings for the review and approval of the Department.

D. Furnish the Engineer with a schedule of shop drawings submittals fixing the respective dates for the submission of shop drawings, the beginning of manufacture, testing and installation of materials, supplies and equipment. This schedule shall indicate those that are critical to the progress schedule.

E. Submit to the Engineer all drawings and schedules sufficiently in advance of construction requirements to provide maximum time for checking and appropriate action from the time the Engineer receives them.

F. Prior to submission, the Contractor shall thoroughly check such drawings, satisfying himself that they meet the requirements of the Contract Documents and that they are coordinated with the arrangements set forth on other shop drawings, and shall place on them the project's name, address, the date and his stamp of approval. Where items for which shop drawings are submitted are to meet specific conditions listed in the detailed Specifications, the conditions shall be so noted on the shop drawing. Where there is a deviation from the Specifications, the Contractor shall note it and state the reason why a deviation is required.

G. Each and every copy of the shop drawings and data shall bear Contractor's stamp showing that they have been so checked and approved. Shop drawings shall indicate any deviations in the submittal from requirements of the Contract Documents and the Contractor shall state the reason why a deviation is required, and the deviation noted on the transmittal sheet. If the Contractor fails to notify the Engineer of a deviation and that deviation mistakenly gets approved by the Engineer**,** the Contractor shall be required to provide the contract specified material and/or equipment to the satisfaction of the Engineer**.**

H. Shop drawings submitted without the required approval as specified above shall be returned without review and no extension of time will be granted for any delays caused by such improper submission.

I. All submittals shall be accompanied by a transmittal letter prepared in duplicate containing the following information:

1. Date.

2. Project Title and Number.

3. Contractor's name and address.

4. The number of each shop drawings, data, and sample submitted.

5. Notification of deviations from Contract Documents.

6. Submittal Log Number conforming to and referring to Specification Section Numbers.

7. Certification the submittal conforms to the specifications or contains deviations to the specifications.

J. Any delays or costs caused, either directly or indirectly, by non-timely submissions; submission of items differing significantly from the intent of the Plans and/or Specifications; repeated submission of or argument over, rejected elements or changes required for acceptance; arguments with the criteria or requirements of the Plans or Specifications; or any other such similar activities shall be at the sole expense of the Contractor.

K. For major equipment submittals, as defined by the Engineer, the Contractor shall include in the submittal a copy of the specification with each and every paragraph initialed be the Contractor indicating compliance, or indication a deviation is requested followed by a request for deviation listing/form.

L. Design calculations, drawings, and materials specifications shall be supplied as specified herein and by the individual Specification sections.

M. After receiving approval of the shop drawings by the Engineer, the Contractor shall be responsible for submitting to the City of Miami Building Department and the Miami-Dade Department of Regulatory and Economic Resources shop drawings of all pre-manufactured items and all other shop drawings as required and obtain their approval prior to the manufacturing or installation of the submitted items. The successful bidder shall also be responsible for contesting any interpretations by the City of Miami Building Department and the Miami-Dade Department of Regulatory and Economic Resources that the Miami-Dade Water and Sewer Department considers non-acceptable. The Contractor shall include in the prices bid, all costs for permits, fees and expenses associated with the submittals, including resubmittals (if any) of such shop drawings to the City of Miami Building Department and the Miami-Dade Department of Regulatory and Economic Resources.

N. Do not begin any of the work covered by a drawing, data, or a sample returned as “AMEND-RESUBMIT” or “REJECTED-RESUBMIT” until a revision or correction thereof has been reviewed and returned to him, by the Engineer, with approval as “NO EXCEPTIONS TAKEN” or "MAKE CORRECTIONS NOTED”. Be responsible for and bear all costs of damages which may result from the ordering of any material or from proceeding with any part of work prior to receiving Engineer's approval or approval “AS NOTED” of the necessary shop drawings.

O. Shop drawings shall be of such character that they may be used as fabrication drawings. Prior to submission, the Contractor shall thoroughly check such drawings, satisfying himself that they meet the requirements of the Plans and Specifications and that they are coordinated with the arrangements set forth on other shop drawings, and shall place on them the Contract Number, the date and his stamp of approval. Two (2) copies will be returned to the Contractor with the Engineer's mark of approval thereon, or will be marked to indicate changes necessary to effect compliance with the Specifications and the remaining copies will be retained by the Department. When drawings are approved by the Engineer, they shall be as binding as any of the Contract Documents. Any errors or omissions on the shop drawings shall not relieve the Contractor of his responsibility. He shall correct such errors, or omissions, including any necessary additions or alterations to construction, at his expense upon notification by the Engineer.

P. Be fully responsible for observing the need for and for making any changes in the arrangement of piping, connections, wiring, manner of installation, etc., which may be required by the materials/equipment he proposes to supply, both as they pertain to his own work, work of others, or of other Divisions herein or Trades and clearly show such changes on the shop drawings. All changes shall be clearly called out.

Q. Determine and verify:

1. Field measurements.

2. Field construction criteria.

3. Catalog numbers and similar data.

4. Conformance with Specifications.

5. Installation and Maintenance clearances.

1.03 ENGINEER’S REVIEW OF SHOP DRAWINGS

A. Except as otherwise indicated, the Engineer will return prints of each submittal to the Contractor with comments noted thereon, within 20 Days following receipt by the Engineer.

B. It is considered reasonable that the Contractor shall make a complete and acceptable submittal to the Engineer by the first resubmittal on an item.

C. The Department reserves the right to withhold monies due to the Contractor to cover additional costs of the Engineer's review beyond the first resubmittal.

D. The Engineer’s maximum review period for each submittal or resubmittal will be 20 Days; thus, for a submittal that requires 2 resubmittals before it is complete, the maximum review period could be 60 Days.

E. If a submittal is returned to the Contractor marked "NO EXCEPTIONS TAKEN," formal revision and resubmission will not be required.

F. If a submittal is returned marked "MAKE CORRECTIONS NOTED," the Contractor shall make the corrections on the submittal, but formal revision and resubmission will not be required. If the Contractor does not agree to abide in full with the corrections, the Contractor must notify the Engineer within in 5 days and the status will be revised to “AMEND-RESUBMIT”.

G. Resubmittals

1. If a submittal is returned marked "AMEND-RESUBMIT," the Contractor shall revise the submittal and resubmit the required number of copies.

2. Resubmittal of portions of multi-page or multi-drawing submittals will not be accepted: For example, if a Shop Drawing submittal consisting of 10 drawings contains one drawing noted as "AMEND-RESUBMIT," the submittal as a whole is deemed "AMEND-RESUBMIT," and 10 drawings are required to be resubmitted.

3. Every change from a submittal to a resubmittal or from a resubmittal to a subsequent resubmittal shall be identified and flagged on the resubmittal. Submittal review comments shall be addressed as numbered in the review comments and all review comments addressed.

H. Rejected Submittals

1. If a submittal is returned marked "REJECTED-RESUBMIT," it shall mean either that the proposed material or product does not satisfy the specification, the submittal is so incomplete that it cannot be reviewed, or is a substitution request not submitted in accordance with the requirements of this section.

2. In the first 2 cases, the Contractor shall prepare a new submittal and shall submit the required number of copies.

3. In the latter case, the Contractor shall submit the substitution request according to the requirements of this section.

4. The resubmittal of rejected portions of a previous submittal will not be accepted.

I. The fabrication of an item may commence only after the Engineer has reviewed the pertinent submittals and returned copies to the Contractor marked either "NO EXCEPTIONS TAKEN" or "MAKE CORRECTIONS NOTED."

J. Corrections indicated on submittals shall be considered as changes necessary to meet the requirements of the Contract Documents and shall not be taken as changes to the contract requirements.

K. The Contractor shall be responsible for confirming and correlating quantities and dimensions, fabrication processes and techniques, coordinating with the trades, and satisfactory and safe performance of the work.

L. Conformance

1. Corrections or comments made on the Contractor's Shop Drawings during review shall not relieve the Contractor from compliance with Contract Drawings and Specifications.

2. Review is for conformance to the design concept and general compliance with the Contract Documents only.

3. The Engineer's review will not constitute an approval of dimensions, quantities, and details of the material, equipment, device, or item shown. The review of drawings and schedules will be general, and shall not be construed:

   a. As permitting any departure from the Contract requirements;

   b. As relieving the Contractor of responsibility for any errors, including details, dimensions, and materials;

   c. As approving departures from details furnished by the Engineer, except as otherwise provided herein.

4. The Contractor shall be responsible for confirming and correlating quantities and dimensions, fabrication processes and techniques, coordinating with the trades, and satisfactory and safe performance of the work.

M. Variations

1. If the drawings or schedules as submitted describe variations and show a departure from the Contract requirements which Engineer finds to be in the interest of the Department and to be so minor as not to involve a change in Contract Price or time for performance, the Engineer may return the reviewed drawings without noting an exception.

2. If the drawings or schedules, as submitted, describe variations and show a departure from the Contract requirements which the Engineer finds to be minor enough to be corrected by redlining the submittal, he shall do so and return the submittal marked "APPROVED AS NOTED." The redlined corrections shall be as binding on the Contractor as would be a resubmission embodying the same corrections.

N. Resubmittals will be handled in the same manner as first submittals. On resubmittals the Contractor shall direct specific attention, in writing or on resubmitted shop drawings, to revisions other than the corrections requested by the Engineer on previous submissions. The Contractor shall make any corrections required by the Engineer.

O. If the Contractor considers any correction indicated on the shop drawings to constitute a change to the Contract Drawings or Specifications, the Contractor shall give written notice thereof to the Engineer.

P. When the shop drawings have been approved by the Engineer, the Contractor shall carry out the construction in accordance therewith and shall make no further changes therein except upon written instructions from the Engineer.

Q. No partial submittals will be reviewed. Submittals not complete will be returned to the Contractor for resubmittal. Unless otherwise specifically permitted by the Engineer, all submittals shall be made in groups containing all associated items for systems, processes or as indicated in specific specifications sections. All drawings, schematics, manufacturer's product data, certifications and other shop drawing submittals required by a system specification shall be submitted at one time as a package to facilitate interface checking.

R. The approval of shop drawings and data will be general, and shall mean that upon examination of the drawings, no variations from the Contract requirements have been discovered, and approval will not relieve the Contractor of his responsibilities as defined under the Contract. The Department’s review will not constitute an approval of dimensions, quantities and details of the material, equipment, device or item shown.

1.04 SHOP DRAWINGS

A. When used in the Contract Documents, the term "shop drawings" shall be considered to mean Contractor's plans for materials and equipment which become an integral part of the Project. These drawings shall be complete and detailed. Shop drawings shall consist of fabrication, erection and setting drawings and schedule drawings, manufacturer's scale drawings, and wiring and control diagrams. Cuts, catalogs, pamphlets, descriptive literature, and performance and test data, shall be considered only as supportive to required shop drawings as defined above.

B. Manufacturer's catalog sheets, brochures, diagrams, illustrations and other standard descriptive data shall be clearly marked to identify pertinent materials, product or models. Delete information which is not applicable to the Work by striking or cross-hatching.

C. Each shop drawing shall have a blank area 3-1/2 inches by 3-1/2 inches, located adjacent to the title block. The title block shall display the following:

1. Project Title and Number.

2. Name of project building or structure.

3. Number and title of the shop drawing.

4. Date of shop drawing or revision.

5. Name of Contractor and subcontractor submitting drawing.

6. Supplier/manufacturer.

7. Separate detailer when pertinent.

8. Specification title and number.

9. Specification section.

10. Application Contract Drawing Number.

D. If drawings show variations from Contract requirements because of standard shop practice or for other reasons, describe such variations in the letter of transmittal. If the Contractor fails to describe such variations, he shall not be relieved of the responsibility for executing the work in accordance with the Contract, even though such drawings have been reviewed and approved.

E. For all mechanical and electrical equipment furnished, provide a list including the equipment name, address of and telephone number of the manufacturer's representative and service company so that service and/or spare parts can be readily obtained.

F. All manufacturers or equipment suppliers who propose to furnish equipment or products shall submit an installation list to the Engineer along with the required shop drawings. The installation list shall include at least five installations where identical equipment has been installed and has been in operation for a period of at least five years, unless otherwise specified. Manufacturers and/or equipment which fails to meet the specified experience period will be considered if the manufacturer or supplier provides a bond or cash deposit which will guarantee replacement of the equipment or process in the event of failure or unsatisfactory service.

G. Only the Engineer will utilize the color "red" in marking shop drawing submittals.

1.05 REQUIRED INFORMATION

A. Transmittal Form

1. Shop Drawing submittals shall be accompanied by the Engineer's standard submittal transmittal form, a reproducible copy of which is available from the Engineer.

2. A submittal without the form, or where applicable items on the form have not been completed, will be returned for resubmittal.

B. Organization

1. Use a single submittal transmittal form for each technical Specification Section or item or class of material or equipment for which a submittal is required.

2. A single submittal covering multiple Sections will not be accepted, unless the primary specification references other Sections for components: For example, if a pump Section references other Sections for the motor, shop-applied protective coating, anchor bolts, local control panel, and variable frequency drive, a single submittal would be accepted, whereas a single submittal covering vertical turbine pumps and horizontal split-case pumps would not be accepted.

3. On the transmittal form, index the components of the submittal and insert tabs in the submittal to match the components.

4. Relate the submittal components to specification paragraph and subparagraph, Drawing number, detail number, schedule title, room number, or building name, as applicable.

5. Unless otherwise indicated, match terminology and equipment names and numbers used in the submittals with those used in the Contract Documents.

C. Format

1. Minimum sheet size shall be 8-1/2 inches by 11 inches, and maximum sheet size shall be 24 inches by 36 inches.

2. Number every page in a submittal in sequence.

3. Collate and staple or bind, as appropriate, each copy of a submittal; the Engineer will not collate sheets or copies.

4. Where product data from a manufacturer is submitted, clearly mark which model is proposed, with complete pertinent data capacities, dimensions, clearances, diagrams, controls, connections, anchorage, and supports.

5. Present a sufficient level of detail for assessment of compliance with the Contract Documents.

6. Numbering

   a. Assign to each submittal a unique number.

   b. Number the submittals sequentially, with the submittal numbers clearly noted on the transmittal.

   c. Assign original submittals a numeric submittal number followed by a decimal point and a numeric digit in order to distinguish between the original submittal and each resubmittal: For example, if submittal "25.1" requires a resubmittal, the first resubmittal will bear the designation "25.2" and the second resubmittal will bear the designation "25.3," and so on.

D. Disorganized submittals that do not meet the requirements of the Contract Documents will be returned without review.

E. Submit, as applicable, the following for all prefabricated or manufactured structural, mechanical, electrical, plumbing, process system, and equipment:

1. Shop drawings or equipment drawings, including dimensions, size and location of connections to other work, and weight of equipment.

2. Catalog information and cuts.

3. Installation or placing drawings for equipment, drives, and bases.

4. Supporting calculations, signed and sealed by a Florida Registered Engineer when required, for equipment and associated supports, or hangers required or specified to be designed by equipment manufacturers.

5. Signed and sealed calculations and drawings by in-house Florida Registered Professional Engineer for structural systems, indicating compliance to the structural design criteria specified in the Drawings.

6. Complete manufacturer's specifications, including materials description and paint system.

7. Performance data and pump curves.

8. Suggested spare parts with current price information.

9. List of special tools required for testing, checking, parts replacement, and maintenance. (Special tools are those which have been specially designed or adapted for use on parts of the equipment, and are not customarily and routinely carried by maintenance mechanics).

10. List of special tools furnished with the equipment.

11. List of materials and supplies required for the equipment prior to, and during startup.

12. List of materials or supplies furnished with the equipment.

13. Special handling instructions.

14. Requirements for storage and protection prior to installation.

15. Requirements for routine maintenance required prior to equipment startup.

16. List of all requested exceptions to the Contract Documents.

1.06 SAMPLES

A. Furnish, for the approval of the Engineer, samples required by the Specifications or requested by the Engineer. Samples shall be delivered to the Engineer as specified or directed. The Contractor shall prepay all shipping charges on samples. Materials or equipment for which samples are required shall not be used in work until approved by the Engineer.

B. Quantity

1. The Contractor shall submit the number of samples indicated by the Specifications.

2. If the number is not indicated, submit not less than 3 samples.

3. Where the quantity of each sample is not indicated, submit such quantity as necessary for proper examination and testing by the methods indicated.

C. Identification and Distribution

1. Individually and indelibly label or tag each sample, indicating the salient physical characteristics and the manufacturer's name.

2. Each sample shall have a label indicating:

a. Name of Project.

b. Material or Equipment Represented.

c. Name of Producer and Brand (if any).

d. Location in Project

3. Upon acceptance by the Engineer, one set of the samples will be stamped and dated by the Engineer and returned to the Contractor, one set of samples will be retained by the Engineer, and one set shall remain at the Site in the Engineer's field office until completion of the work.

D. Samples shall be of sufficient size and quantity to clearly illustrate:

1. Functional characteristics of the product, with integrally related parts and attachment devices.

2. Full range of color, texture and pattern.

3. A minimum of two samples of each item shall be submitted.

E. The Contractor shall schedule sample submittals such that

1. Sample submittals for color and texture selection are complete so the Engineer has 45 Days to assemble color panels and select color- and texture-dependent products and materials without delay to the construction schedule; and,

2. After the Engineer selects colors and textures, the Contractor has sufficient time to provide the products or materials without delay to the construction schedule.

3. The Contract Times will not be extended for the Contractor's failure to allow enough review and approval or selection time, failure to submit complete samples requiring color or texture selection, or failure to submit complete or approvable samples.

F. Selection

1. Unless otherwise indicated, the Engineer will select colors and textures from the manufacturer's standard colors and standard materials, products, or equipment lines.

2. If certain samples represent non-standard colors, materials, products, or equipment lines that will require an increase in Contract Times or Price, the Contractor shall clearly state so on the transmittal page of the submittal.

G. Approval of a sample shall be only for the characteristics or use named in such approval and shall not be construed to change or modify any Contract requirements.

H. Approved samples of the hardware in good condition will be marked for identification and may be used in the work. Materials and equipment incorporated in work shall match the approved samples. Samples which failed testing or were not approved will be returned to the Contractor at his expense, if so requested at time of submission

1.07 MANUFACTURER’S EXPERIENCE RECORD

A. When a manufacturer's experience record is required by these Specifications, the following may be provided in lieu of the specified record:

1. Manufacturers and/or equipment which does not meet the specified experience period will be considered if the manufacturer or supplier provides a bond or cash deposit valid for five years less his years of experience, which will guarantee replacement of the equipment or process in the event of failure or unsatisfactory performance or service

1.08 SUBMITTAL REQUIRED FOR FOREIGN MANUFACTURED ITEMS

A. In addition to the submittal requirements stated above, suppliers of foreign manufactured items shall submit the names and addresses of companies within the United States that maintain technical service representatives and a complete inventory of spare parts and accessories for each foreign-made item proposed for incorporation into the Work. Failure

to prove the foregoing capabilities shall be cause for rejection of the foreign manufactured items.

B. Foreign manufactured equipment and materials shall in all cases be clearly and permanently marked with the manufacturer's name and country of origin of the item. The name of the U.S. importing/supplying firm is not acceptable. Shop drawing submittals of said foreign made items shall be accompanied by written information to include name and location (i.e. country, city, and street address) of the manufacturer. This requirement shall also apply to the foreign made elements of items assembled in this country from parts wholly or partially manufactured overseas.

C. The words, "permanently marked" as used in this subsection shall be construed to mean; die stamped, cast-in, welded, or otherwise marked such that the removal of the marking by any mechanical or chemical means will result in obvious permanent damage to the surface marked. These markings shall be on surfaces which are not hidden by assembly.

D. Where specified elsewhere herein or at the sole discretion of the Engineer, who's word shall be final, supply verification of quality, suitability or other aspects, as directed by the Engineer, from a Professional Engineer licensed to practice in the State of Florida or the state where the U.S. firm is located. The verification shall be signed, sealed, and dated. All costs for this verification shall be at the sole expense of the Contractor and no extra compensation will be allowed. Verification by foreign based Engineers, firms, manufacturers, etc. will not be acceptable. Verification by means of a very stringent foreign testing agency/standard (for example ISO 9000 series) may be acceptable. However, this shall again be at the sole discretion of the Engineer and the full burden of proof and satisfaction of the Department shall rest with the Contractor. No extra time will be permitted due to the requirement for verification and the Contractor has the sole responsibility to make his submittals with all necessary information in a timely fashion.

E. Items which are fabricated (i.e. assembled in this country from partially or wholly foreign manufactured parts) may also be required to have verification of their foreign made elements as specified for wholly foreign made items in the preceding paragraph.

F. Any items in contact with or being added to potable water shall have AWWA/NSF 61 or 60, as appropriate, certification and acceptance.

1.09 PROPOSED SUBSTITUTIONS OR "OR APPROVED EQUAL" ITEMS

A. The Contractor's bid price shall include materials or equipment meeting the specifications. Proposed substitutions will only be considered following award of the Contract as described herein

B. Changes in products, materials, equipment, and methods of construction required by the Contract Documents which are proposed by the Contractor after award of the Contract are considered to be requests for substitutions. Where the Plans and/or Specifications designate the products of a particular manufacturer, the product specified has been found suitable for the intended use. Articles or products of similar characteristics may be

offered for the approval of the Engineer if sufficient information is submitted by the Contractor to allow the Engineer to determine that the material or equipment proposed is equivalent or equal to that named, subject to the following requirements:

1. The burden of proof as to the type, function, and quality of any such substitution product, material or equipment shall be upon the Contractor.

2. The Engineer will be the sole judge as to the type, function, and quality of any such substitution and the Engineer's decision shall be final.

3. The Engineer may require the Contractor to furnish additional data about the proposed substitution.

4. The Department may require the Contractor to furnish a special performance guarantee or other surety with respect to any substitution.

5. Acceptance by the Engineer of a substitution item proposed by the Contractor shall not relieve the Contractor of the responsibility for full compliance with the Contract Documents and for adequacy of the substitution.

6. The Contractor shall pay all costs of implementing accepted substitutions, including redesign and changes to work necessary to accommodate the substitution.

C. The procedure for review by the Engineer will include the following:

1. Prior to proposing any substitute item, Contractor shall satisfy itself that the item proposed is: equal or better to that specified; that such item will fit into the space allocated; that such item affords comparable ease of operation, maintenance and service; that the appearance, longevity and suitability for the climate are comparable; that by reason of costs savings, reduced construction time or similar demonstrable benefit, the substitution of such item will be in Department’s interest and will in no way detrimentally impact the project schedule. The burden of proof that such an item offered is equal in all respects to that specified shall be Contractor’s.

2. If the Contractor wishes to provide a substitution item, the Contractor shall make written application to the Engineer on the "Substitution Request Form". A copy of this form is attached to the end of this Specification. Following award of contract, an electronic copy of the Substitution Request Form will be provided to the Contractor.

3. The Contractor shall certify by signing the form that the list of paragraphs on the form are correct for the proposed substitution.

4. The Engineer will evaluate each proposed substitution within a reasonable period of time, not to exceed 30 days.

5. As applicable, no shop drawing submittals shall be made for a substitution item nor shall any substitution item be ordered, installed, or utilized without the Engineer's prior written acceptance of the Contractor's "Substitution Request Form".

6. The Engineer will record the time required by the Engineer in evaluating substitutions proposed by the Contractor and in making changes by the Contractor in the Contract Documents occasioned thereby.

D. The Contractor's application shall address the following factors which will be considered by the Engineer in evaluating the proposed substitution:

1. Complete data substantiating compliance of proposed substitution with the requirements of the Contract Documents, including:

   a. Product identification, including manufacturer’s name and address and model number of product

   b. Manufacturer’s literature, identifying:

      1) Product description

      2) Reference Standards

      3) Performance, testing, and relevant Engineering data

   c. Samples, if applicable

   d. List two similar projects where substitution was utilized. Provide the following information for each project:

      1) Contact person name and phone number. Contact should be able to provide information on the use of the product.

      2) Location of installation

      3) Date of installation

      4) Quantity installed

      5) Scope and description of project

2. Whether the evaluation and acceptance of the proposed substitution will prejudice the Contractor's achievement of Substantial Completion on time.

3. Whether acceptance of the substitution for use in the work will require a change in any of the Contract Documents to adapt the design to the proposed substitution.

4. Whether incorporation or use of the substitution in connection with the work is subject to payment of any license fee or royalty.

5. Whether all variations of the proposed substitution from the items originally specified are identified.

6. Whether available maintenance, repair, and replacement service are indicated. The manufacturer shall have a local service agency (within 50 miles of the site) which maintains properly trained personnel and adequate spare parts and is able to respond and complete repairs within 24-hours.

7. Whether an itemized estimate is included of all additional costs and cost savings that will result directly or indirectly from acceptance of such substitution, including cost of redesign; claims of other contractors affected by the resulting change; and any licensing fee or royalties.

8. Whether the proposed substitute item meets or exceeds the experience and/or equivalency requirements listed in the appropriate technical specifications.

E. In making the formal request for substitution, the Contractor represents that:

1. The substitution has been investigated and it has been determined that is equal to or superior in all respects to the specified product.

2. The Contractor will provide the same warranties and bonds for the substitution as the product specified.

3. The substitution will be coordinated into the installation of the work and any required changes to complete the work in all respects as a result of the substitution will be made by the Contractor at no additional cost to the Department.

4. The Contractor waives claims for additional cost caused by the substitution, which may subsequently become apparent.

5. All cost data provided is complete and accurate.

F. Without any increase in cost to the Department, the Contractor shall be responsible for and pay all costs in connection with proposed substitutions and of inspections and testing of equipment or materials submitted for review prior to the Contractor's purchase thereof for incorporation in the work, whether or not the Engineer accepts the proposed substitution or proposed equipment or material. The Contractor shall reimburse the Department for the charges of the Engineer for evaluating each proposed substitution. In some instances, a credit may be due the Department. Unless specifically authorized by the Engineer in writing, no additional contract time will be allowed, and a decrease in time may be appropriate.

PART 2 - PRODUCTS (NOT USED)

PART 3 - EXECUTION (NOT USED)

END OF SECTION

SECTION 01340A

SHOP DRAWINGS, PRODUCT DATA, AND SAMPLES

Advancement of Construction Technology

SUBSTITUTION REQUEST

(After the Bidding Phase)

Project: _____ Substitution Request Number: _____

_____ From: _____

To: _____ Date: _____

A/E Project Number: _____

Re: _____

Contract For: _____

Specification Title: _____ Description: _____

Section: _____ Page: _____ Article/Paragraph: _____

Proposed Substitution: _____

Manufacturer Address: _____ Phone: _____ _____

Trade Name: _____ Model No.: _____

Installer: _____ Address: _____ Phone: _____

History: ☐ New product ☐ 2-5 years old X☐ 5-10 years old ☐ More than 10 years old

Differences between proposed substitution and specified product: _____

_____

_____

X☐ Point-by-point comparative data attached

Reason for not providing specified item: _____

_____

Similar Installation:

Project: _____ Architect: _____

Address: _____ Owner: _____

_____ Date Installed: _____

Proposed substitution affects other parts of Work:X ☐ No ☐ Yes; explain _____

_____

Savings to Owner for accepting substitution: _____ ($ _____)

Proposed substitution changes Contract Time: ☐ No ☐ Yes [Add] [Deduct] _____ days

Supporting Data Attached: ☐ Drawings ☐ Product Data ☐ Samples ☐ Tests ☐ Reports ☐ _____

© Copyright 1996, Construction Specification Institute,
99 Canal Center Plaza, Suite 300 Alexandria, VA 22314

SUBSTITUTION REQUEST
(Continued)

The Undersigned certifies:

- Proposed substitution has been fully investigated and determined to be equal or superior in all respects to specified product.
- Same warranty will be furnished for proposed substitution as for specified product.
- Same maintenance service and source of replacement parts, as applicable, is available.
- Proposed substitution will have no adverse effect on other trades and will not affect or delay progress schedule.
- Cost data as stated above is complete. Claims for additional costs related to accepted substitution which may subsequently become apparent are to be waived.
- Proposed substitution does not affect dimensions and functional clearances.
- Payment will be made for changes to building design, including A/E design, detailing, and construction costs caused by the substitution.
- Coordination, installation, and changes in the Work as necessary for accepted substitution will be complete in all respects.

Submitted by: _____

Signed by: _____

Firm: _____

Address: _____

_____

Telephone: _____

Attachments: _____

_____

_____

_____

A/E's REVIEW AND ACTION

☐ Substitution approved - Make submittals in accordance with Specification Section 01330.
☐ Substitution approved as noted - Make submittals in accordance with Specification Section 01330.
☐ Substitution rejected - Use specified materials.
☐ Substitution Request received too late - Use specified materials.

Signed by: Date:

Additional Comments: ☐ Contractor ☐ Subcontractor ☐ Supplier ☐ Manufacturer ☐ A/E ☐ _____

_____

_____

_____

_____

_____

_____

_____

Copyright 1996, Construction Specification Institute,
99 Canal Center Plaza, Suite 300 Alexandria, VA 22314

SECTION 01350A

SITE SECURITY

PART 1 - GENERAL

1.01 THE SUMMARY

A. Access to this Project site is restricted. After award and prior to commencement of work, the Contractor shall meet with the Chief Plant Operator and Department's Security Management to submit required information and review security parameters related to the Project. Subcontractors are also required to comply with all security requirements and it shall be the responsibility of the Contractor to ensure a subcontractor is in compliance with all requirements.

B. All construction staff, visitors, and material delivery vehicles will utilize this entrance and exit point throughout the entire duration of the Project, unless so approved and authorized otherwise by Plant Security. All vehicles are subject to search prior to entrance to and exit from the Plant. All vehicles entering into or leaving from a Department facility must stop at the designated entrance and exit points (gates) when entering to and exiting the site. All persons entering the Plant site must exit from the same point (gate) that they entered.

C. All contractors, subcontractors, visitors, delivery personnel and staff shall comply with all Applicable Law and Miami-Dade Water and Sewer Department (Department) requirements with respect to safety and security, in particular to the requirements for access to sites and facilities. The Contractor is responsible for enforcing the prohibition of all items such as weapons, illegal drugs, alcohol, and any other illegal contraband, and the reporting of security breaches to Department Security Staff and Management.

D. All contractors, subcontractors and their staffs, visitors, County Building Inspectors and all delivery personnel, must be aware that access to a Department site is restricted to only those with assigned identification badges or day passes. All contractors, subcontractors, and staff, visitors, building inspectors, and delivery personnel shall be restricted to the area of the plant where their work or delivery is taking place. Work site restrictions shall be coordinated with the Chief Plant Operator and Department Security Management prior to construction and strictly followed throughout the entire duration of the Contract.

E. Should any access be required to a location other than the primary access to the construction site, the Contractor shall be required to provide personnel, suitable to Department Security Management, to ensure that only predetermined authorized personnel are allowed access.

F. Access to chemical areas, control areas, electrical generation areas/switching areas and fuel areas will only be allowed as absolutely necessary and unescorted access to these areas will not be allowed under any circumstances.

G. Anyone requesting to access the Department site outside of regular work hours or anyone without a Department issued identification badge, including delivery personnel and building inspectors, will be treated as a visitor.

1.02 IDENTIFICATION BADGES

A. Department Security will be responsible for providing identification badges and color-coded day passes for all individuals entering the facility. Each employee accessing the facility more than five days in any ninety-day period will require an assigned identity badge. This badge will require a background check and be issued at a cost of $60.00 each to the Contractor. Procedures for obtaining the badge are provided at http://www.miamidade.gov/water/facility-security-procedures.asp for Non-Department Employees. Color-coded day passes will be issued at the Plant entrance gates for visitors, inspectors, and delivery personnel. There will be no cost to the Contractor for color-coded day passes. All contractors, subcontractors and their staff shall be required to obtain a Miami-Dade Water and Sewer Department identification badge or color coded day pass in accordance with Department Security Requirements. Everyone requesting access to the facility for more than five days in any ninety-day period will be required to submit to Department Security a 'Non-Employee ID Card Application', the form can be downloaded from:

http://www.miamidade.gov/water/facility-security-procedures.asp.

1. Identification Badges will be issued for those individuals who will require on-going access (more than 5 days in any 90-day period) to the Plant.

2. A color-coded Day Pass will be provided for those individuals who only require short-term access (one to two days a week to the Plant site and to visitors and delivery personnel).

B. All individuals requesting a Department identification badge or color-coded day pass must present two (2) forms of identification, one of which includes a picture. All persons driving a vehicle within the Plant site must present a valid driver's license. Expired identification documentation or driver's license will not be considered as valid. All individuals requesting a WASD identification badges are subject to providing fingerprints in accordance with Implementing Order 7-41.

http://www.miamidade.gov/aopdfdoc/aopdf/pdffiles/IO7-41.pdf

Finger printing is by appointment, requires additional documentation to be completed and provided, and may be performed at a different location than where identification badges are issued.

C. The Department reserves the right to require the use of assigned access identification badges and/or color-coded day passes for anyone requiring access to the Plant. Issued identification badges or day passes must be worn and displayed on an outermost garment or hard hat at all times while at a Department

site. The Contractor will be charged on a per person basis for the issuance of Department identification badges and background investigations for access requirements into the facility. The fee for the background investigation is $60.00 per person. Payment for a security background investigation must be in the form of the Contractor's company check made payable to Miami-Dade Water and Sewer Department. Cash or credit card payment will not be accepted.

D. All Department issued color-coded day passes must be turned in to security at the end of each workday when the bearer exits the Plant. In the case of delivery personnel and visitors, as the visitor exits the plant site and when the delivery person is exiting the plant site after the last delivery of the day. Day passes are only valid for the day they are issued.

E. Department issued identification badges and color-coded day passes are the property of WASD and must be safeguarded by the Contractor. All identification badges must be returned to Department Security when they are no longer needed i.e. the employee that the badge was issued for will not be returning to the plant site, or at the completion of the Contract. In the event of a lost or stolen, unreadable or defaced Department identification badge, the Contractor or their staff must immediately notify Department Security, indicating the details of the loss and request a replacement badge. The fee for obtaining a replacement badge is $15.00. Payment must be made in the form of the Contractor's Company check, made payable to Miami-Dade Water and Sewer Department. Cash or credit card payments will not be accepted. Badges that cannot be read by the security badge electronic reading device at the Plant entry gates must be replaced or entry to the plant will be denied.

F. All the Contractor personnel accessing the facility for more than 5 days in any 90-day period must have a background check and all background checks must be completed prior to issuance of Notice to Proceed. The Contractor shall coordinate with Department to accomplish in a timely manner and not delay the work. The Contractor's cost for Security to complete a background check is $60.00 for each background investigation. Contractor will not be given Notice to Proceed until all workers have been processed and approved by the Department.

G. Contractors and subcontractors are required to comply with the Department mandatory Safety Training Program. All Contractors, Subcontractors employees and onsite staff and any other persons that are to perform labor or services on the Plant site, are required to receive the training prior to being provided with an identification badge or day pass. Department Safety will provide the safety training/information.

H. Contractor shall contact Donna Fries, Department's Safety Supervisor, at (786) 268-5620 or FRIESD@miamidade.gov, to arrange for mandatory (PSM) Project Safety Management training. Note that this training must be completed prior to mobilization. The Contractor shall also be responsible for the training of all subcontractors, sub-subcontractors and personnel working on this project on site.

1.03 VISITORS

A. The Contractor shall provide Department Security with a list of scheduled visitors each day. This list must be received by Security prior to 3:00 PM on the previous day before the visitor is to access to the Plant. This list must include the date and time that it was provided to security, bear the Contractor's Company name and be signed by the Contractor's Project Manager or his designated representative. In the event that someone should appear at the entry gates that is not on the Contractor's pre-submitted list, the gate security guard will call the Contractor's field office advising them who is requesting entry. The Contractor's Project Manager or his designated representative will have to go to the gate, identify the person requesting entry and verbally request a color-coded day pass for the individual or individuals. All visitors must provide an acceptable photo identification documentation and be registered with security prior to entry, or provided a day pass, and be announced to the Contractor requiring their presence. All visitors requesting entry to the Plant site must surrender their driver's license or photo identification card to Security at the gate in order to obtain a day pass. The license or photo identification card will be returned when the visitor exits the Plant.

B. Anyone requesting to access the Project site outside of regular work hours or anyone without a Department-issued identification badge will be treated as a visitor.

1.04 PARKING/VEHICULAR SPEED

A. Department will provide a limited number of designated on-site parking spaces for the Contractor's and subcontractor's employees and administrative staff. All Contractors, subcontractors, and visitors must abide by posted parking signs and refrain from parking in non-designated or specifically assigned parking areas. Department Security will monitor and enforce parking regulations within the Plant. Vehicles parked in a non-designated or restricted parking areas will be removed by Security at the vehicle owner's expense and could barred from future entry to the Plant. Parking spaces designated as "Visitor" are reserved for visitors only. Unauthorized vehicles found in visitor designated parking spaces will be treated the same as vehicles found in non-designated parking areas.

B. In the event the designated on-site parking reaches the full capacity level, Department Security will post "Lot Full" signs at the plant entrance, directing all incoming arrivals to a secondary off-site parking lot.

C. Department Security will be responsible to open and close the secondary off-site parking lot each day. No overnight parking is allowed. All parking lot gates will be closed and locked by Security at the end of each work day. Vehicles left over night in the secondary offsite parking areas, will be towed at the vehicle owner's expense and could be prohibited from future parking.

D. Parking adjacent to any building structures, fence lines (interior or exterior), or any other non-designated parking areas will not be permitted.

E. Overnight parking of personal vehicles or delivery vehicles will not be allowed within the Plant site or Department off-site parking lots, except as specifically approved by Plant Security. Plant and parking lot gates will be closed and locked at the end of each work day by Security. All vehicles entering the Department Plant site or its proximity will travel in a safe and slow manner. The max speed allowed is 10 mph within the Plant site or Department off-site parking lots. Violators could be denied driving privileges within the Plant site or Department off-site parking lots and could be excluded from entry to the Plant site.

1.05 DELIVERIES

A. The Contractor shall be required to provide personnel, suitable to Department Security, to verify all material deliveries at the entrance to the Plant property.

B. All deliveries will be made through the designated Construction Entrance, when specifically approved by Plant Security, between the designated hours of construction operations. Deliveries will not be accepted prior to or after the designated hours, except as approved by Plant Security.

C. All Contractor and subcontractor materials delivered and/or stored on site shall be restricted to locations designated by the Engineer or Plant Superintendent.

1.06 DEPARTMENT SECURITY

A. Department Security will maintain an operational security monitoring and control center within the project site. Security will be responsible for access control, badge or day pass issuance, monitoring of security areas, vehicular traffic and parking, emergency response and notification in the event of emergencies and the safeguarding of County assets. Department Security management and guard staff will be on site 24/7 at designated posts in order to provide the required security levels and assist with the operational controls. The Contractor shall contact the Security Section of the Miami-Dade Water and Sewer Department at (786) 552-8590 for further information related to security.

B. A primary emergency contact number will be provided and prominently posted at the start of the project. Contractors and subcontractors shall report any emergencies or injuries immediately directly to Department Security who will initiate the notification process with the reporter via conference call to 911. Direct dialing of 911 should not be done by any individual other than Department Security, in order to maintain proper incident management and control at the site.

1.07 GENERAL SECURITY REQUIREMENTS

A. In the event that an individual worker or subcontracting firm cannot pass the required security check for work in a restricted area of the plant, it shall be the

Contractor's sole responsibility to replace said worker or the subcontracting firm. Such replacement shall be in full conformance with all County requirements, particularly those concerning small business enterprises, and satisfactory to the Engineer and all other County agencies having jurisdiction. The Contractor is advised that all workers or subcontractors carrying out construction operations where the work requires access to: a number of different plant areas; chemical areas; control areas; electrical generation and/or switching areas; and fuel areas have a high probability that a special security clearance will be required.

B. The Contractor shall include in the prices bid, all cost to comply with the security and safety requirements and regulations, as indicated here, no additional compensation or Contract time will be allowed the Contractor because of the requirements of this Section.

C. The Department reserves the right to add reasonable additional security requirements as needed and the Security Chief's decision to do so shall be final. No additional Contract time or compensation will be allowed in such instance.

D. The attention of the Contractor is hereby directed to the Florida Statutes, Section 119.071, that all Miami-Dade County plans and records, including drawings, permit records, microfilm and other depictions of any type of Miami-Dade County facilities is exempt from the public records law. It is the responsibility of a prospective contractor / Contractor, to maintain security controls of any Contract Documents including the Plans, even when providing copies to prospective sub-contractors and vendors. The prospective contractor shall maintain a record of all Contract Documents to be used in the fulfillment of the bidding of or the performance of the Contract. The Contractor shall return the same to the County representative upon completion.

E. All Contractors, subcontractors and staff will safeguard against any unauthorized distribution or posting of any and all Department provided infrastructure information to any individual or organization not authorized in advance by Department management and security.

F. Department Security will notify the Contractor in writing if his/her personnel violate the security requirements. In the case of repeated violations, the Department may stop the Contractor's work until such time as the Contractor can show that he/she has taken steps, satisfactory to the Security Chief, to correct the problem.

G. The Contractor is also advised that during times of increased security levels or drills for such situations, Department Security or law enforcement agencies having jurisdiction over the Plant may impose a "lockdown" condition which, while in effect will restrict entry and/or exit of personnel and equipment to or from the Plant. If in the event such incident should occur, the Contractor, if so desired, can request a non-compensable time extension. This request must be received by the Engineer within five (5) working days after normal working conditions have been restored. The Engineer's decision as to the amount of time lost due to the incident and the impact of the incident on the work, if any, shall be final.

H. The use of camera photography, video or any other type of recording device is prohibited at all times at Department sites. Any request to photograph, video record or any other type or mode of recording on site shall be made in advance to Department Management, through Department Security who will inform Department Security of the authorization. Violators recorded media and/or recording devices will be confiscated by Security and they will be immediately escorted from the Plant site with future access denied and could face criminal prosecution.

I. The Contractor is responsible at all times, throughout the entire contract, for security of the storage and lay-down areas, and for securing and protecting all of Contractor's plant, materials, equipment, and tools, including Department-furnished equipment and materials and those belonging to subcontractors.

PART 2 - PRODUCTS (NOT USED)

PART 3 - EXECUTION (NOT USED)

END OF SECTION

SECTION 01370A

SCHEDULE OF VALUES

PART 1 - GENERAL

1.01 THE SUMMARY

A. This Section defines the process whereby the Schedule of Values shall be developed.

B. The Schedule of Values shall begin with the Bid Summary Form included in the Bid Package and further break down work activities, in sufficient detail such that the Engineer is able to determine monthly progress and payment amounts.

1.02 PRELIMINARY SCHEDULE OF VALUES

A. Submit a preliminary Schedule of Values for the major components of the work at the Preconstruction Conference.

B. Review and Revisions

1. The Contractor and Engineer shall meet and jointly review the Preliminary Schedule of Values, and make any adjustments in value allocations if, in the opinion of the Engineer, these are necessary to establish fair and reasonable allocation of values for the major work components.

2. Front-end loading will not be accepted.

3. The Engineer may require reallocation of major work components from items in the above listing, if in the opinion of the Engineer such reallocation is necessary.

4. This review and any necessary revisions shall be completed within 15 Days from the date of Notice to Proceed.

1.03 DETAILED SCHEDULE OF VALUES

A. Prepare and submit a Detailed Schedule of Values to the Engineer within 15 Days from the date of Notice to Proceed.

B. Base the Detailed Schedule of Values on the accepted Preliminary Schedule of Values for major work components.

C. The Engineer will be the sole judge of acceptable numbers, details and description of values established.

D. If in the opinion of the Engineer, a greater number of Schedule of Values items than the proposed is necessary; the Contractor shall add the additional items so identified by the Engineer.

E. Adjustments and Acceptance

1. The Contractor and Engineer shall meet and jointly review the Detailed Schedule of Values within 35 Days from the date of Notice to Proceed or Purchase Order Issuance, at which time the value allocations and extent of detail shall be reviewed in order to determine if necessary adjustments to the values are required.

2. Make necessary adjustments to the value allocation or level of detail, and submit a revised Detailed Schedule of Values within 40 Days from the date of Notice to Proceed or Purchase Order Issuance.

1.04 CHANGES TO SCHEDULE OF VALUES

A. In the event that the Contractor and Engineer agree to make adjustments to the original Schedule of Values, because of inequities discovered in the original accepted Detailed Schedule of Values, increases and equal decreases to values for activities may be made.

1.05 LIQUIDATED DAMAGES

A. The Schedule of Values information is an integral part of the scheduling and reporting under and the progress payment information.

B. As such, it is critical information to evaluating progress and the proper planning of the Department’s and Engineer's work related effort as well as their financial obligations associated with the Project.

C. Accordingly, if a submittal required by this Section is found to be incomplete or is submitted later than required, the Department will suffer financial loss and, accordingly, liquidated damages will be assessed against the Contractor in accordance with Special Provisions SP 3.0.

PART 2 - PRODUCTS (NOT USED)

PART 3 - EXECUTION (NOT USED)

END OF SECTION

SECTION 01380A

CONSTRUCTION PHOTOGRAPHS

PART 1 - GENERAL

1.01 SUMMARY

A. The Contractor shall conduct pre-construction, construction progress, and post construction photographs and videos of the construction project as specified herein.

1.02 SUBMITTALS

A. Videos and photographs shall be submitted to the Engineer for its review.

1.03 PRE-CONSTRUCTION PHOTOGRAPHS AND VIDEOS

A. Prior to commencing the work, the Contractor shall provide a continuous color digital audio-video recording (DVD) of the entire area of the project to serve as a record of the site pre-construction conditions. The Contractor will provide one copy of the pre-construction video to the Department, one copy to the Engineer, and maintain one copy free from damage or defect that shall become the property of Department at Project Close Out. The Contractor shall review the video recordings for clarity and accuracy, and shall make supplemental records of existing conditions if they are not clearly indicated.

B. No construction shall begin prior to review of the pre-construction video of the construction area by the Department, Engineer, and the Contractor. The Engineer or Department shall have the authority to reject all or any portion of the video not conforming to Specifications and order that it be redone at no additional charge to the Department. The Contractor shall reschedule unacceptable coverage within five (5) calendar days after being notified. The Engineer shall designate those areas, if any, to be omitted from or added to audio-video coverage.

C. Video recording shall be made not more than 60 days prior to commencement of construction.

D. The Contractor shall video the entire project area including the project site, and any other areas which may be affected or impacted by the work including staging and storage areas.

E. The Contractor shall supplement video recordings with photographs. A minimum of twenty (20) pre-construction photographs shall be provided.

1.04 CONSTRUCTION PROGRESS PHOTOGRAPHS

A. A minimum of six (6) photographs shall be taken each week until completion of the Work.

B. The number of photographs required shall be at the sole discretion of the Engineer whose decision shall be final. An increase in the number of photographs above the minimum shall not be cause for an increase in cost and no extra compensation will be

allowed.

C. For all photographs the Contractor shall coordinate with the Engineer as to the actual number and location of views to be photographed and the day and time of photographing.

D. Progress photographs shall be submitted with monthly Applications for Payment in accordance with the Contract Documents.

1.05 POST-CONSTRUCTION PHOTOGRAPHS AND VIDEO

A. At project closeout, the Contractor shall provide a continuous color digital audio-video recording (DVD) of the entire area of the project to serve as a record of the post-construction conditions. The completed clarifier basin structural rehabilitation project and adjacent properties shall be captured.

B. The post-construction video recording shall be supplemented with a minimum of forty (40) photographs documenting the completion of the project construction.

PART 2 – PRODUCTS

2.01 VIDEO MEDIA

A. The video portion of the recording shall produce bright, sharp, and clear pictures with accurate colors and shall be free from distortion, tearing, rolls, and any other form of picture imperfection.

B. All video recordings shall contain coverage of all surface features located within the construction zone of influence. Of particular concern shall be the existence of any faults, fractures, defects, etc. of existing features, particularly those located at private properties and homes immediately adjacent to and across the street from the project site. Panning, zoom-in and zoom-out rates shall be sufficiently controlled to maintain a clear view of the object.

C. All video recordings shall, by electronic means, display continuously and simultaneously, the date and time of recording. The video recording shall be generated with the actual taping date and time as transparent digital information. The date information shall contain the month, day and year.

D. Video media shall be standard Digital Video Disc (DVD) format.

E. Accompanying the video recording shall be a corresponding and simultaneously recorded audio recording. Each tape shall begin with the recorded date, project name and be followed by the general location, i.e., viewing side and direction of progress. The audio track shall consist of an original live recording. The recording shall contain exclusively the narrative commentary of the electrographer, recorded simultaneously with the fixed elevation video record of the zone of influence of construction. The recording shall assist in viewer orientation and in any needed identification,

differentiation, clarification, or objective description of the features being shown in the video portion of the recording, including location relative to construction stations. The audio recording shall be free from any conversations between the camera operator and any other production technicians. The audio portion of the recording shall produce the commentary of the camera operator with proper volume, clarity, and be free from distortion and interruptions.

2.02 VIDEO MEDIA INDEXING

A. Video Identification: All video media shall be permanently labeled and shall be properly identified by number and project name and location.

B. Video Logs: Each video shall have a log of that video's contents. The log shall describe the various segments of coverage contained on the video in terms of the names of the streets or easements, coverage beginning and end, directions of coverage, video unit counter numbers, and date.

C. Video Index: The electrographer shall provide an index listing, in order by video number, each video number and a brief description of coverage contained on that video.

2.03 PHOTOGRAPHS

A. Furnish one (1) CD containing all pictures in electronic JPG format.

B. Photographs shall have a minimum clarity of 5 megapixels.

PART 3 – EXECUTION

3.01 GENERAL

A. The Engineer and the Department may request to be present during the pre-construction video recording and photographing.

3.02 VISIBILITY

A. All video recordings and photographs shall be performed during times of good visibility: none shall be done during period of significant precipitation, mist, or fog. The video recordings and photographs shall only be done when sufficient sunlight is present to properly illuminate the subject, and to produce bright, sharp replications of those subjects.

B. No video recordings and photographs shall be performed when more than 10% of the area to be taped contains debris or obstructions unless otherwise authorized by the Department.

SECTION 01380A

CONSTRUCTION PHOTOGRAPHS

3.03 COVERAGE

A. The Contractor shall sufficiently capture the existing pre-construction conditions within the project site, but not limited to: staging areas, work areas, roadways, light poles, trees, landscaping, storm drainage structures, walls, and any other areas which may be affected or impacted by the work to protect the Department, the Engineer, and the Contractor from unsubstantiated claims. The Contractor shall capture existing deterioration of landscaping and other fixtures and features in or adjacent to the area of work, whether impacted or not.

3.04 CAMERA OPERATION

A. Camera Control: Camera pan, tilt, zoom-in, and zoom-out rates shall be sufficiently controlled such that recorded objects will be clearly viewed during video playback. In addition, all other camera and recording system controls such as lens focus and aperture, video level, pedestal, chroma, white balance, and electrical focus shall be properly controlled or adjusted to maximize picture quality.

B. Viewer Orientation Techniques: The audio and video portions of the recording shall maintain viewer orientation. Visual displays of all visible building addresses shall be utilized.

END OF SECTION

SECTION 01410A

TESTING AND TESTING LABORATORY SERVICES

PART 1 - GENERAL

1.01 SUMMARY

A. The cost of all testing required by the Contract Documents, shall be the sole responsibility of the Contractor.

B. The Department may, at any time, elect to have materials tested for conformance with the Contract Documents.

C. Testing laboratory inspection, sampling and testing will be required for, but not limited to, the following:

1. PH testing of concrete.

2. Concrete moisture.

3. Concrete roughness (CSP Concrete Surface Profile).

4. As otherwise required under individual Specification sections.

1.02 CONTRACTOR'S RESPONSIBILITIES

A. Make available, at no cost to the Department, adequate quantities of representative samples of materials proposed to be used and which require testing.

B. Cooperate with laboratory personnel and provide access to Work to facilitate the execution of its required services. Furnish incidental labor and facilities:

1. To provide access to Work to be tested.

2. To obtain and handle samples at the Project site or at the source of the product to be tested.

3. To facilitate inspections and tests.

C. Notify laboratory sufficiently in advance of operations to allow for laboratory assignment of personnel and scheduling of tests.

1.03 PAYMENT FOR TESTING

A. Contractor will pay for all testing services required elsewhere in these Specifications.

B. When initial tests indicate non-compliance with the Contract Documents, subsequent retesting occasioned by the non-compliance shall be performed by the same Testing

Laboratory, and all costs thereof shall be paid for by the Contractor.

C. Inspecting and testing, performed exclusively for the Contractor's convenience, shall be the sole responsibility of and shall be paid for by the Contractor.

D. The Department shall have the right to test for any parameter on the Project for its own quality assurance at its sole costs, except that, in the case of a non-compliance test related to Project's scope of work, the Contractor will pay for such tests.

1.04 QUALITY ASSURANCE

A. Upon completion of each test and/or inspection, promptly distribute copies of test or inspection reports to the Engineer, Contractor, to governmental agencies requiring submission of such reports, and to other persons as directed by the Engineer.

PART 2 - PRODUCTS

2.01 TEST METHODS

A. Tests and Inspections will be conducted in accordance with the requirements of these Specifications or, if not herein specified, in accordance with the latest standards of the American Society for Testing and Materials (ASTM), or other approved and recognized authorities as acceptable to the Department.

B. Requirements for testing are described in various Sections of these Specifications.

PART 3 - EXECUTION (NOT USED)

END OF SECTION

SECTION 01421A

ABBREVIATIONS OF INSTITUTIONS

PART 1 - GENERAL

1.01 SUMMARY

A. Wherever in these Specifications references are made to the standards, specifications, or other published data of the various international, national, regional, or local organizations, such organizations may be referred to by their acronym or abbreviation only. As a guide to the user of the Specifications, the following acronyms or abbreviations which may appear shall have the meanings indicated herein.

1.02 ABBREVIATIONS

AA	Aluminum Association
AAMA	American Architectural Manufacturers Association
AASHTO	American Association of State Highway and Transportation Officials
AATCC	American Association of Textile Chemists and Colorists
ABMA	American Bearing Manufacturer's Association – ABMA
ACGIH	American Conference of Governmental Industrial Hygienists
ACI	American Concrete Institute
AF&PA	American Forest and Paper Association
AGA	American Gas Association
AGMA	American Gear Manufacturers Association
AHA	American Hardboard Association
AHAM	Association of Home Appliance Manufacturers
AI	The Asphalt Institute
AIA	American Institute of Architects
AIHA	American Industrial Hygiene Association
AIIM	Association for Information and Image Management
AISC	American Institute of Steel Construction
AISI	American Iron and Steel Institute
AITC	American Institute of Timber Construction
AMA	Acoustical Material Association
AMCA	Air Movement and Control Association International, Inc
ANS	American Nuclear Society
ANSI	American National Standards Institute, Inc.
APA	The Engineered Wood Association
API	American Petroleum Institute
APWA	American Public Works Association
ARI	Air-Conditioning and Refrigeration Institute
ASA	Acoustical Society of America
ASAE	American Society of Agricultural Engineers
ASCE	American Society of Civil Engineers
ASHRAE	American Society of Heating, Refrigerating, and Air Conditioning Engineers
ASME	American Society of Mechanical Engineers
ASNT	American Society of Nondestructive Testing

SECTION 01421A

ABBREVIATIONS OF INSTITUTIONS

ASQ	American Society for Quality
ASSE	American Society of Sanitary Engineers
ASTM	American Society for Testing and Materials
AWCI	American Wire Cloth Institute
AWI	Architectural Woodwork Institute
AWPA	American Wood Preservers Association
AWPI	American Wood Preservers Institute
AWS	American Welding Society
AWWA	American Water Works Association
BBC	Basic Building Code, Building Officials and Code Administrators International
BHMA	Builders Hardware Manufacturer's Association
CABO	Council of American Building Officials
CDA	Copper Development Association
CEMA	Conveyors Equipment Manufacturer's Association
CGA	Compressed Gas Association
CLFMI	Chain Link Fence Manufacturer's Institute
CLPCA	California Lathing and Plastering Contractors Association
CMAA	A division/section of the Material Handling Industry of America
CRSI	Concrete Reinforcing Steel Institute
DCDMA	Diamond Core Drilling Manufacturer's Association
DHI	Door and Hardware Institute
DIPRA	Ductile Iron Pipe Research Association
EI	Energy Institute
EIA	Electronic Industries Alliance
EPA	Environmental Protection Agency
ETL	Electrical Test Laboratories
FCC	Federal Communications Commission
FCI	Fluid Controls Institute
FEMA	Federal Emergency Management Association
FHWA	Federal Highway Administration
FM	Factory Mutual System
FPL	Florida Power and Light
HI	Hydronics Institute, Hydraulic Institute
HSWA	Federal Hazardous and Solid Waste Amendments
IAPMO	International Association of Plumbing and Mechanical Officials
ICBO	International Conference of Building Officials
IBC	International Building Code
ICC	International Code Council
ICEA	Insulated Cable Engineers Association
ICCEC	Electrical Code
ICC-ES	International Code Council Evaluation Service
IEEE	Institute of Electrical and Electronics Engineers
IESNA	Illuminating Engineering Society of North America
IFC	International Fire Code
IFGC	International Fuel Gas Code
IMC	International Mechanical Code
IME	Institute of Makers of Explosives
IPC	International Plumbing Code, Association Connecting Electronic Industries

SECTION 01421A

ABBREVIATIONS OF INSTITUTIONS

IRC	International Residential Code
ISA	Instrument Society of America
ISDI	Insulated Steel Door Institute
ISEA	Industrial Safety Equipment Association
ISO	International Organization for Standardization
ITE	Institute of Traffic Engineers
ITU-T	Telecommunications Standardization Sector of the International Telecommunications Union
LPI	Lightning Protection Institute
LRQA	Lloyd's Register Quality Assurance
MBMA	Metal Building Manufacturer's Association
MIL	Military Standards (DoD)
MPTA	Mechanical Power Transmission Association
MSS	Manufacturers Standardization Society
NAAMM	National Association of Architectural Metal Manufacturer's
NACE	National Association of Corrosion Engineers
DASMA	Door and Access Systems Manufacturers Association International
NAPF	National Association of Pipe Fabricators
NBBPVI	National Board of Boiler and Pressure Vessel Inspectors
NCCLS	National Committee for Clinical Laboratory Standards
NCMA	National Concrete Masonry Association
NEC	National Electrical Code
NEMA	National Electrical Manufacturer's Association
NETA	International Electrical Testing Association
NFPA	National Fire Protection Association or National Fluid Power Association
NISO	National Information Standards Organization
NIST	National Institute of Standards and Technology
NLGI	National Lubricating Grease Institute
NRCA	National Roofing Contractors Association
NSF	National Sanitation Foundation
NWWDA	National Wood Window and Door Association
OSHA	Occupational Safety and Health Administration
PCA	Portland Cement Association
PCI	Precast/Prestressed Concrete Institute
PPI	Plastic Pipe Institute
RCRA	Resource Conservation and Recovery Act
RIS	Redwood Inspection Service, a division of the California Redwood Association, CRA
RMA	Rubber Manufacturers Association
RVIA	Recreational Vehicle Industry Association
RWMA	Resistance Welder Manufacturer's Association
SAE	Society of Automotive Engineers
SDI	Steel Door Institute, Steel Deck Institute
SMA	Screen Manufacturers Association
SMACNA	Sheet Metal and Air Conditioning Contractors National Association
SPFA	Steel Plate Fabricator's Association
SPIB	Southern Pine Inspection Bureau
SSBC	Southern Standard Building Code, Southern Building Code Congress
SSPC	Society for Protective Coating

SECTION 01421A

ABBREVIATIONS OF INSTITUTIONS

SSPWC	Standard Specifications for Public Works Construction
STLE	Society of Tribologists and Lubricating Engineers
TAPPI	Technical Association of the Worldwide Pulp, Paper, and Converting Industry
TFI	The Fertilizer Institute
TIA	Telecommunications Industries Association
TPI	Truss Plate Institute
UBC	Uniform Building Code
UL	Underwriters Laboratories, Inc.
WCLIB	West Coast Lumber Inspection Bureau
WDMA	National Window and Door Manufacturers Association
WEF	Water Environment Federation
WI	Woodwork Institute
WRI	Wire Reinforcement Institute, Inc.
WWPA	Western Wood Products Association

PART 2 - PRODUCTS (NOT USED)

PART 3 - EXECUTION (NOT USED)

END OF SECTION

SECTION 01501A

SAFETY REQUIREMENTS AND PROTECTION OF PROPERTY

PART 1 - GENERAL

1.01 CONTRACTOR'S RESPONSIBILITY FOR SAFETY

A. Conduct whatever work is necessary for safety and be solely and completely responsible for conditions of the job site, including safety of all persons (including employees) and property during the construction of the project. This requirement shall apply continuously and not be limited to normal working hours.

1.02 FEDERAL, STATE, AND LOCAL SAFETY REQUIREMENTS

A. Safety provisions shall conform to the Federal and State Departments of Labor Occupational Safety and Health Act (OSHA), and all other applicable Federal, State, County, and local laws, ordinances, codes, the requirements set forth herein, and any regulations that may be specified in other parts of these specifications. Where any of these are in conflict, the more stringent requirements shall prevail. Contractor's failure to thoroughly familiarize himself with the aforementioned safety provisions shall not relieve him from compliance with the obligations and penalties set forth therein.

B. All open excavations made in the earth shall be performed in compliance with the State of Florida Trench Safety Act, OSHA 29 CFR 1926.650, Subpart P (Chapter 90-96, Laws of Florida). The Contractor shall appoint a "competent person", in accordance with Subpart P, who shall be present at the jobsite. A "competent person" shall mean one who is capable of identifying existing and predictable hazards in the surroundings, or working conditions which are unsanitary, hazardous, or dangerous to employees, and who has authorization to take prompt corrective measures to eliminate them.

C. The Contractor shall familiarize himself with the "Underground Facility Damage Prevention and Safety Act", Florida Statute 556. The Contractor shall contact the Sunshine State One-Call Center, at 1-800-432-4770, forty-eight (48) hours prior to any excavation. Failure to familiarize himself with the aforementioned safety provisions shall not relieve him from compliance with the obligations and penalties set forth therein.

D. Conduct operations in such a manner utilizing warning devices, such as traffic cones, barricades and warning lights that traffic, pedestrian and Department personnel are given adequate warning of hazards of the worksite as may be deemed necessary by the Department, Engineer of Record, governing agency having jurisdiction over the work or political subdivision.

1.03 SAFE ACCESS BY FEDERAL, STATE, AND LOCAL GOVERNMENT OFFICIALS

The Contractor shall at all times provide proper facilities for safe access to the work by authorized government officials.

SECTION 01501A

SAFETY REQUIREMENTS AND PROTECTION OF PROPERTY

1.04 CONSTRUCTION SAFETY PROGRAM

A. Develop and maintain for the duration of this project, a safety program that will effectively incorporate and implement all required safety provisions. The Contractor shall appoint an employee who is qualified and authorized to supervise and enforce compliance with the safety program.

B. Certain products specified in these specifications contain warnings by the manufacturers that under certain conditions, if instructions for use are not followed, a hazardous condition may exist. It is the Contractor's responsibility to instruct his workmen in the safe use of the product, or any product substitution.

C. The duty of the Engineer to conduct construction review of the Contractor's performance is not intended to include a review or approval of the adequacy of the Contractor's safety supervisor, the safety program, or any safety measures taken in, on, or near the construction site.

1.05 SAFETY EQUIPMENT

A. As part of the safety program, maintain at office or other well-known place at the jobsite, safety equipment applicable to the work as prescribed by the governing safety authorities, all articles necessary for giving first-aid to the injured, and establish the procedure for the immediate relocation to a hospital or a doctor's care of any person who may be injured on the jobsite.

B. Perform all necessary work to protect the general public from hazards, including, but not limited to, surface irregularities or undamped grade changes in pedestrian walkway or sidewalk, and trenches or excavations in roadway. Furnish barricades, lanterns, and proper signs to safeguard the public and work.

C. The performance of all work and all completed construction, particularly with respect to ladders, platforms, structure openings, scaffolding, fall protection devices, shoring, logging, machinery guards and the like, shall be in accordance with the applicable governing safety authorities.

D. During construction, construct and at all times maintain satisfactory and substantial temporary chain link fencing, solid fencing, railings, barricades or steel plates, as applicable, at all openings, obstructions, or other hazards in streets and walkways. All such barriers shall have adequate warning lights as necessary, or required, for safety.

1.06 STORAGE OF HAZARDOUS MATERIALS

A. The Contractor is hereby cautioned that he cannot store any environmentally hazardous materials such as solvents, greases, lubricants or any other type of chemical substances at the project site. The Contractor shall be allowed to keep such materials at the site which is to be used for immediate use only.

B. The materials shall be stored and handled in a proper and safe manner and upon its use immediately dispose of the containers, cans, rags and remnants of the materials in a manner approved by the Department of Environmental Resources Management (DERM) at the Contractor's own cost. The Contractor cannot store empty containers at the site. In case of any violation, the Department will report such violation to DERM and the Contractor shall be subject to all the penalties and fines as required by State and County regulations.

1.07 TRAFFIC SAFETY AND ACCESS TO PROPERTY

A. Comply with all rules and regulations of the city, state, and county authorities regarding closing or restricting the use of public streets or highways. No public or private road shall be closed, except by express permission of the Department. Conduct the work so as to assure the least possible obstruction to traffic and normal commercial pursuits. Protect all obstructions within traveled roadways by installing approved barricades, signs, and lights where necessary for the safety of the public. The convenience of the general public and residents and the protection of persons and property are of prime importance and shall be provided for in an adequate and satisfactory manner.

B. Where traffic will pass over backfilled trenches before they are paved, the top of the trench shall be maintained in a condition that will allow normal vehicular traffic to pass over. Temporary access driveways must be provided where required. Cleanup operations shall follow immediately behind backfilling and the worksite shall be kept in an orderly condition at all times.

C. When flagmen and guards are required by regulation or when deemed necessary for safety, they shall be furnished with approved orange wearing apparel and other regulation traffic control devices.

1.08 FIRE PREVENTION AND PROTECTION

A. Perform all work in fire-safe manner. Furnish and maintain on the site adequate fire-fighting equipment capable of extinguishing incipient fires. Comply with applicable federal, local, and state fire-prevention regulations. Where these regulations do not apply, applicable parts of the National Fire Prevention Standard for Safeguarding Building Construction Operations (NFPA No. 241) shall be followed.

B. The Contractor shall have a Hot Work Permit Program and shall complete a permit prior to cutting or welding. A Fire Watch shall be designated to help monitor the hot work operation.

1.09 TRAFFIC CONTROL AND USE OF PUBLIC STREETS

A. The Contractor shall be responsible for traffic control as specified hereinafter. Any reference to Miami-Dade County, its departments, or its published regulations, permits and data, shall be synonymous and interchangeable with other recognized governing bodies over particular areas of streets or their departments, published regulations,

permits, or data. Abide by all applicable laws, regulations and codes thereof, pertaining to maintenance of public streets, detour of traffic, traffic control and other provisions as may be required for this project.

B. The Contractor shall be fully responsible for the maintenance of public streets, detour of traffic (including furnishing and maintaining regulatory and informative signs along the detour route), traffic control and other provisions, throughout the project as required by the Miami-Dade County Department of Public Works, Traffic Engineering Division (Traffic Division). Traffic shall be maintained according to corresponding typical traffic control details as outlined in the Miami-Dade County Public Works Manual. No street shall be completely blocked nor blocked more than one-half at any time, keeping the other half open for traffic without specific approval.

C. If required by the Traffic Division, employ the required number of uniformed off-duty policemen to maintain and regulate the flow of traffic through the construction area. The number of men required and the number of hours on duty necessary for the maintenance and regulation of the traffic flow shall be subject to their approval. If required for traffic control permits or agencies, the Contractor shall work odd or night hours, as required for traffic control reasons, and the cost of such work shall be considered as incidental to construction.

D. The Contractor shall provide all barricades and/or flashing warning lights necessary to warn motorist of the construction throughout the project.

E. Excavated or other material stored adjacent to or partially upon a roadway pavement shall be adequately marked for traffic safety at all times. Provide necessary access to all adjacent property during construction.

F. The Contractor shall be responsible for the provision, installation and maintenance of all traffic control and safety devices, in accordance with specifications outlined in the Miami-Dade County Public Works Manual. In addition, provide for the resetting of all traffic control and information signing removed during the construction period.

G. Where excavations are to be made in the vicinity of signalized intersections, attention is directed to the fact that vehicle loop detectors may have been embedded in the pavement. Verify these locations by inspecting the site of the work and by contacting the Sunshine State One-Call Center at 1-800-432-4770. Any loop detector which is damaged, whether shown on the Plans or not, shall be repaired or replaced to the satisfaction of the Traffic Division.

H. Notify the Traffic Division 24 hours in advance of the construction date, and 48 hours in advance of construction within any signalized intersection.

I. Temporary pavement will be required over all cuts in pavement areas, and also where traffic is to be routed over swale or median areas. When the temporary pavement for routing traffic is no longer necessary, it shall be removed and the swale or median area restored to their previous condition.

SECTION 01501A

SAFETY REQUIREMENTS AND PROTECTION OF PROPERTY

1.010 CONTRACTOR'S RESPONSIBILITY FOR UTILITY PROPERTIES AND SERVICE

A. Where the Contractor's operation could cause damage or inconvenience to railway, telephone, fiber optic, television, electrical power, oil, gas, water, sewer, or irrigation systems, the Contractor shall make all arrangements necessary for the protection of these utilities and services or any other known utilities.

B. Notify all utility companies that are affected by the construction operation at least 48 hours in advance. Under no circumstance expose any utility without first obtaining permission from the appropriate agency. Once permission has been granted, locate, expose, and provide temporary support for all existing underground utilities and utility poles where necessary.

C. The Contractor and his subcontractors shall be solely and directly responsible to the owner and operators of such properties for any damage, injury, expense, loss, inconvenience, delay, suits, actions, or claims of any character brought because of any injuries or damage which may result from the construction operations under this project.

D. Neither the Department nor its officers or agents shall be responsible to the Contractor for damages as a result of the Contractor's failure to protect utilities encountered in the work.

E. In the event of interruption to domestic water, sewer, storm drain, or other utility services as a result of accidental breakage due to construction operations, promptly notify the proper authority. Cooperate with said authority in restoration of service as promptly as possible and bear all costs of repair. In no event shall interruption of any utility service be allowed outside working hours unless granted by the owner of the utility.

F. In the event water service lines that interfere with trenching are encountered, the Contractor may, by obtaining prior approval of the water utility, cut the service, dig through, and restore the service with similar and equal materials at the Contractor's expense and as approved by the Department.

G. Drainage culverts that are at or near right angles to a pipeline and are removed by the Contractor shall be replaced in kind at the expense of the Contractor unless otherwise noted.

H. Replace, with material approved by the Department, at Contractor's expense, any and all other laterals, existing utilities or structures removed or damaged during construction, unless otherwise provided for in these specifications and as approved by the Department.

1.011 HURRICANE PREPAREDNESS

A. General

During such periods of time as are designated by the National Weather Service as being a hurricane alert, the Contractor shall perform all precautions as necessary to safeguard the work and property, including the removal of all small equipment and materials from the site, lashing all other equipment and materials to each other and to rigid construction, and any other safety measures as may be directed by the Engineer.

B. Upon Notification of a Hurricane Watch

The Contractor should prepare or have in place a Plan of Action for the specific actions to be taken on their particular projects.

C. Upon Notification of a Hurricane Warning

1. The Contractor shall implement their Plan of Action to protect the project and the public.

2. For construction projects within the public right-of-ways, the Contractor shall suspend his construction operations, backfill all open trenches, remove all construction equipment and materials from the right-of-way, remove unnecessary traffic barricades and signs and secure remaining barricades by "half burial" or "double sand bags".

1.012 WORKING IN CONFINED SPACES

Where a Contractor needs to work in a confined space, the Contractor must comply with the General Industry, OSHA Confined Space Standard, CFR 1910.146 or the equivalent Confined Space Standard in DFR 1926, Construction Standards.

PART 2 - PRODUCTS (Not Used)

PART 3 - EXECUTION (Not Used)

END OF SECTION

SECTION 01570A

TEMPORARY ENVIRONMENTAL CONTROLS

PART 1 - GENERAL

1.01 DUST ABATEMENT

A. The Contractor shall prevent its operation from producing dust in amounts damaging to property, or causing a nuisance to persons occupying buildings in the vicinity of the Project Site. The Contractor shall be responsible for any damage resulting from dust originating from its operations. Dust abatement measures shall be continued until the Contractor is relieved of further responsibility by the Engineer.

B. Storage Piles: Enclose, cover, water (as needed), or apply non-toxic soil binders according to manufacturer's specifications on material piles (i.e. gravel, sand, dirt) with a silt content of 5 percent or greater.

C. Active Areas of Site: Water active construction areas and unpaved roads as needed and as requested by Engineer to prevent the propagation of dust.

D. Inactive Areas of Site: Apply non-toxic soil stabilizers according to manufacturer's specifications to inactive construction areas, or water as needed to maintain adequate dust control.

E. Vehicle Loads: Cover or maintain at least 2 feet of freeboard vertical distance between the top of the load and the top of the trailer sides on trucks hauling dirt, sand, soil, or other loose materials off of the Site.

F. Roads: When there is visible track-out onto a paved public road, install wheel washers where the vehicles exit and enter onto the paved roads and wash the undercarriage of trucks and any equipment leaving the Site on each trip. Sweep the paved street at the end of each shift with a Mobil Athey or similar water spray pick-up broom-type street sweeper as necessary or as directed.

G. Vehicle Speeds: If watering of unpaved roads is not sufficient to control dust, reduce vehicle speeds to 10 mph or less on such roads.

1.02 SEDIMENTATION ABATEMENT

A. The Contractor shall be responsible for collecting, storing, hauling, and disposing of spoil, silt, and waste materials in compliance with applicable federal, state, and local rules and regulations and the Contract Documents.

B. Install and maintain erosion and sediment control measures, such as swales, grade stabilization structures, berms, dikes, waterways, filter fabric fences, and sediment basins.

C. Filter fabric barrier systems, if used, shall be installed in such a manner that surface runoff will percolate through the system in sheet flow fashion and allow sediment to be retained and accumulated.

D. Remove and dispose of sediment deposits at the designated spoil area. If a spoil area is not indicated, dispose of sediment off-Site at a location not in or adjacent to a stream or floodplain. Sediment to be placed at the spoil area should be spread evenly, compacted, and stabilized. Sediment shall not be allowed to flush into a stream or drainage way.

E. Maintain erosion and sediment control measures until final acceptance or until requested by the Engineer to remove it.

1.03 STORMWATER POLLUTION PREVENTION

A. Contractor shall minimize stormwater pollution from the Site.

1.04 RUBBISH CONTROL

A. During the progress of the Work, the Contractor shall keep the Site and other areas for which it is responsible in a neat and clean condition and free from any accumulation of rubbish. The Contractor shall dispose of rubbish and waste materials of any nature and shall establish regular intervals of collection and disposal of such materials and waste. The Contractor shall also keep its haul roads free from dirt, rubbish, and unnecessary obstructions resulting from its operations. Disposal of rubbish and surplus materials shall be off the Site in accordance with local codes and ordinances governing locations and methods of disposal and in conformance with applicable safety laws and the particular requirements of Part 1926 of the OSHA Safety and Health Standards for Construction.

1.05 SANITATION

A. Toilet Facilities: Fixed or portable chemical toilets shall be provided wherever needed for the use of employees. Toilets shall conform to the requirements of Part 1926 of the OSHA Standards for Construction.

B. Sanitary and Other Organic Wastes: The Contractor shall establish a regular daily collection of sanitary and organic wastes. Wastes and refuse from sanitary facilities provided by the Contractor or organic material wastes from any other source related to the Contractor's operations shall be disposed of away from the Site in a manner satisfactory to the Engineer and in accordance with Laws and Regulations pertaining thereto.

1.06 CHEMICALS

A. Chemicals used on the Work or furnished for facility operation, whether defoliant, soil sterilant, herbicide, pesticide, disinfectant, polymer, reactant, or of other classification, shall show approval of either the U.S. Environmental Protection Agency or the U.S.

Department of Agriculture. Use of such chemicals and disposal of residues shall be in strict accordance with the printed instructions of the manufacturer.

PART 2 - PRODUCTS (NOT USED)

PART 3 - EXECUTION (NOT USED)

END OF SECTION

SECTION 01600A

MATERIAL AND EQUIPMENT SHIPMENT, HANDLING, STORAGE, AND PROTECTION

PART 1 - GENERAL

1.01 THE SUMMARY

A. This shall include both Department furnished material and equipment, and Contractor furnished material and equipment.

B. The Contractor is to inform all subcontractors, suppliers, and manufacturers of the requirements herein specified, and shall include expenses for the following services in his costs for compliance with the requirements hereinafter specified.

1.02 PREPARATION FOR SHIPMENT

A. When practical, equipment shall be factory-assembled. The equipment parts and assemblies that are shipped unassembled shall be furnished with an assembly plan and instructions. The separate parts and assemblies shall be factory match-marked or tagged in a manner to facilitate assembly. All assemblies are to be made by the Contractor at no additional cost to Department.

B. Machined and unpainted parts subject to damage by the elements shall be protected with an application of a strippable protective coating, or other protective method approved by the Engineer.

C. Equipment shall be packaged or crated in a manner that will provide protection from damage during shipping, handling, and storage.

D. The outside of the package or crate shall be adequately marked or tagged to indicate its contents by name and equipment number, if applicable; approximate weight; state any special precautions for handling; and indicate the recommended requirements for storage prior to installation.

1.03 PACKING AND DELIVERY OF SPARE PARTS AND SPECIAL TOOLS

A. Properly mark to identify the associated equipment by name, equipment, and part number. Parts shall be packaged in a manner for protection against damage from the elements during shipping, handling, and storage. Ship in boxes that are marked to indicate the contents. Delivery of spare parts and special tools shall be made prior to the time associated equipment is scheduled for the initial test run.

1.04 SHIPMENT

A. All equipment and material shall be shipped with freight and shipping paid FOB jobsite.

B. The Contractor shall request a 7-day advance Notice of Shipment from manufacturers, and, upon receipt of such notice, provide the Engineer with a copy of the current delivery

information concerning all equipment and other items and materials of critical importance to the project schedule.

C. Schedule delivery to reduce long term on-site storage prior to installation and/or operation. Under no circumstances shall equipment be delivered to the site more than one month prior to installation without written authorization from the Engineer.

D. Coordinate delivery with installation to ensure minimum holding time for items that are hazardous, flammable, easily damaged or sensitive to deterioration.

1.05 RECEIVING

A. The Contractor shall unload and record the receipt of all equipment and materials at the jobsite.

B. All costs for receiving, inspection, handling, storage, insurance, inventory control, and equipment maintenance for both the Contractor-supplied and Department-supplied materials and equipment, shall be included in the bid price and no extra compensation will be allowed.

1.06 INSPECTION

A. Immediately upon receipt of equipment and materials at the jobsite, the Contractor shall inspect for completeness and any evidence of damage during shipment. Department's supplied equipment and material shall be inspected and inventoried together with a Department's inspector. Should there appear to be any shortage or damage, the Engineer shall be immediately notified; and the Contractor shall be fully responsible for informing the manufacturers and the transportation company of the extent of the shortage and/or damage. If the item or items require replacing or supplying missing parts, the Contractor shall take the necessary measures to expedite the replacement or supply of the missing parts.

1.07 HANDLING

A. Equipment and materials received for installation on this Project shall be handled in accordance with the manufacturer's recommendations, and in a manner that will prevent damage.

B. Pipe and fittings shall at all times be handled with great care to avoid damage. In loading and unloading, they shall be lifted with cranes or hoists or slid or rolled on skidways in such a manner as to avoid shock. Under no circumstances shall this material be dropped or allowed to roll or slide against obstructions. No cables, lifting arms, hooks or other devices shall be inserted into the pipe or fitting. All lifting, pulling or pushing mechanisms shall be applied to the exterior of the pipe or fitting. Pipe and other material shall be distributed along areas near vehicular traffic in advance of installation, only to the extent approved by the Engineer. Pipe shall be stored on blocking or timber. It shall not be stored on rocks, boulders, or other supports which in the opinion of the Engineer are unsuitable. Such materials shall be so placed as to keep obstruction to all traffic to a

minimum.

1.08 STORAGE AND PROTECTION

A. Equipment and materials shall be stored prior to installation as recommended by the manufacturer. Generally, materials such as pipe shall be stored off the ground in approved storage yards or along the line of the proposed installation, as approved by the Engineer. Items subject to the damage by the elements, vandalism, or theft shall be stored in secure buildings. Items requiring environmental control for protection shall be provided with the necessary environmentally controlled storage facilities at no cost to the Department.

B. Store and protect products in accordance with the manufacturer's instructions, with seals and labels intact and legible. Storage instructions shall be studied by the Contractor and he shall review them with the Engineer. Instructions shall be carefully followed and a written record of this kept by the Contractor. Arrange storage to permit access for inspection.

C. Store loose granular materials on solid flat surfaces in a well-drained area. Prevent mixing with foreign matter.

D. Cement and lime shall be stored under a roof and off the ground and shall be kept completely dry at all times. All structural, miscellaneous and reinforcing steel shall be stored off the ground or otherwise to prevent accumulations of dirt or grease, and in a position to prevent accumulations of standing water and to minimize rusting. Beams shall be stored, with the webs in a vertical position. Precast concrete shall be handled and stored in a manner to prevent accumulations of dirt, standing water, staining, chipping or cracking. Brick, block and similar masonry products shall be handled and stored in a manner to reduce breakage, cracking and spalling to a minimum.

E. All mechanical, electrical and other equipment, instruments and other items subject to damage if stored outdoors (even though covered by canvas) shall be stored in a weather tight building to prevent damage. The building, even if temporary, must be satisfactory to the Engineer. Building shall be provided with adequate ventilation to prevent condensation. Maintain temperature and humidity within range required by manufacturer.

1. All equipment shall be stored fully lubricated with oil, grease and other lubricants unless otherwise instructed by the manufacturer.

2. Moving parts shall be rotated a minimum of once weekly to insure proper lubrication and to avoid metal-to-metal "welding". Upon installation of the equipment, the Contractor shall start the equipment at least half load, once weekly for an adequate period of time to ensure that the equipment does not deteriorate from lack of use.

3. Lubricants shall be changed upon completion of installation and as frequently as required thereafter during the period between installation and acceptance. New lubricants shall be put into the equipment at the time of final acceptance.

4. Prior to final acceptance of the equipment, the Contractor shall have the manufacturer inspect the equipment and certify that its condition has not been detrimentally affected by the long storage period. Such certifications by the manufacturer shall be deemed to mean that the equipment is judged by the manufacturer to be in a condition equal to that of equipment that has been shipped, installed, tested and accepted in a minimum time period. As such, the manufacturer will guarantee the equipment equally in both instances. If such a certification is not given, the equipment shall be judged to be defective. It shall be removed and replaced at the Contractor's expense.

F. All bolts, nuts, gaskets and other joint materials for use in pipes shall be stored under cover.

G. Gaskets shall be stored in their original packing bags or containers, and care shall be exercised to keep them away from heat, light, oil gasoline or other petroleum products. Gaskets shall be kept clean at all times and not handled with greasy or dirty hands.

H. Plastic pipe and other elastomeric products shall be stored under cover to preclude damage by ultraviolet radiation even if the product has UV inhibitors in its compound.

I. Valves and other equipment having heating elements to eliminate moisture accumulation shall be supplied with electrical power of the required characteristics.

1.09 INSURANCE

A. The Contractor's insurance shall adequately cover the value of materials delivered but not yet incorporated into the work. The Contractor and Department shall be named as co-insured insofar as their respective interests may appear. Proof of this coverage must be submitted to the Engineer at the time request for progress or partial payments.

1.010 INVENTORY CONTROL

A. Equipment and materials shall be stored in a manner to provide easy access for inspection and inventory control. The Contractor shall keep a running account of all materials in storage to facilitate inspection and to estimate progress payments for materials delivered but not installed in the work.

1.011 EQUIPMENT MAINTENANCE PRIOR TO DEPARTMENT'S ACCEPTANCE

A. Provide the required or manufacturer's recommended maintenance during storage, during the installation, and until such time as Department accepts the equipment for full-time operation.

1.012 SALVABLE EQUIPMENT

A. Any salvable pipe, fitting, or other miscellaneous material or equipment removed during construction, and not reused in the work, shall be cleaned, hauled, and stored by the

Contractor at his own expense, where directed by the Engineer, and shall remain the property of Department. All other material shall be disposed of by the Contractor at his own expense.

PART 2 - PRODUCTS (NOT USED)

PART 3 - EXECUTION (NOT USED)

END OF SECTION

SECTION 01660A

SITE ACCESS AND STORAGE

PART 1 - GENERAL

1.01 EXISTING JOB SITE

A. The work of this project is to be performed at a facility owned by Department and identified elsewhere in these documents.

1.02 EXISTING UTILITIES

A. Protection of and relocation of existing utilities, structures and other facilities shall be in accordance with Section 01011A, Site Conditions and Protection of Existing Facilities.

B. The relocation of existing utilities, as noted on the Plans, or for the convenience of the Contractor, shall be the responsibility of the Contractor. This work shall be completed by either the forces of the existing utility or the Contractor's forces at the discretion of the responsible utility. If the work is to be performed by the Contractor, all work shall be done in accordance with the utility company's requirements. The Contractor shall also be responsible for the coordination of all existing utility relocations with the appropriate utilities. Where temporary supports or protective encasements are required during the construction, the Contractor shall be responsible for this work at no additional cost. Under no circumstances shall the Contractor be authorized extra payment for this work, and all cost for the relocation shall be the responsibility of the Contractor.

C. Any conflicts between the field investigation and the information shown on the Plans shall be brought to the immediate attention of the Engineer.

1.03 SITE ACCESS AND STORAGE

A. The Department reserves the right to enter upon, and to use, any and all portions of the work performed hereunder (or under its other Contracts), whether completed or not, as may be required.

B. Highway Limitations: The Contractor shall make its own investigation of the condition of available public and private roads and of clearances, restrictions, bridge load limits, and other limitations affecting transportation and ingress and egress to the site of the work. It shall be the Contractor's responsibility to construct and maintain any haul roads required for its construction operations.

C. Temporary Crossings: Continuous, unobstructed, safe, and adequate pedestrian and vehicular access shall be provided to fire hydrants, parking lots, Vehicular access to all production facilities shall be maintained except when necessary construction precludes such access for reasonable periods of time.

D. Street Use: Nothing herein shall be construed to entitle the Contractor to the exclusive use of any public street, alleyway, or parking area during the performance of the work hereunder and it shall conduct its operations to not interfere unnecessarily with the

Department or any other authorized work of utility companies or other agencies in such streets, alleyways, or parking areas. No street shall be closed plant operations without first obtaining permission of the Engineer and the Department. Where excavation is being performed in any streets, one lane shall be kept open to traffic at all times, unless otherwise indicated. Toe boards shall be provided to retain excavated material if required by the Engineer or the Department. Fire hydrants on or adjacent to the work shall be kept accessible to fire-fighting equipment. Temporary provisions shall be made by the Contractor to assure the use of sidewalks and the proper functioning of gutters, storm drain inlets, and other drainage facilities.

1.04 CONTRACTOR'S WORK AND STORAGE AREA

A. The Contractor shall limit his operations, temporary facilities and storage of equipment and materials to the project site. Should the Contractor require additional area, outside the project site, for its operations or storage, the Contractor shall make its own arrangements for any necessary additional lands or facilities necessary for the proper execution of the work and for locating the field offices as required.

   1. The Contractor may utilize private warehouse and/or office space for his storage area and/or construction field offices.

B. The Contractor shall submit to the Engineer for approval, a proposed plan and layout for all field offices, temporary facilities, and parking both for on the project site and on any additional lands obtained by the Contractor for its use during construction of the project. Prior to commencing any preparation remove, relocate and protect where necessary all existing underground and above ground facilities, pipelines, sprinkler systems, sod and all other existing installations. All these installations shall be restored to their initial conditions.

C. The Contractor shall construct and use a separate storage area for hazardous materials used in constructing the work.

   1. For the purpose of this paragraph, hazardous materials to be stored in the separate area are products labeled with any of the following terms: Warning, Caution, Poisonous, Toxic, Flammable, Corrosive, Reactive, or Explosive. In addition, whether or not so labeled, the following materials shall be stored in the separate area: diesel fuel, gasoline, new and used motor oil, hydraulic fluid, cement, paints and paint thinners, 2-part epoxy coatings, sealants, asphaltic products, glues, solvents, wood preservatives, sand blast materials, and spill absorbent.

   2. Hazardous materials shall be stored in groupings according to the Material Safety Data Sheets.

   3. The Contractor shall develop and submit to the Engineer a plan for storing and disposing of the materials above.

   4. The Contractor shall obtain and submit to the Engineer a single EPA number for wastes generated at the Site.

5. The separate storage area shall meet the requirements of authorities having jurisdiction over the storage of hazardous materials.

6. Hazardous materials that are delivered in containers shall be stored in the original containers until use. Hazardous materials delivered in bulk shall be stored in containers which meet the requirements of authorities having jurisdiction.

1.05 PARKING

A. Parking inside at any County Facility will be allocated by Department near the vicinity of the project site and in accordance with safety regulations. The Contractor shall be responsible for making its own arrangements for parking of its direct employees, subcontractors, vendors, etc. as may be necessary either on site or offsite.

B. The Contractor shall be responsible for providing the following minimum temporary parking spaces:

1. At the project site:

a. One (1) space for the Department.

b. One (1) space for the Engineer.

2. At the field office location:

a. One (1) space for the Department.

b. Two (2) spaces for the Engineer.

c. As required by regulatory agencies and permits.

3. Traffic and parking areas shall be maintained in a sound condition, free of excavated material, construction equipment, mud, and construction materials. The Contractor shall repair breaks, potholes, low areas which collect standing water, and other deficiencies.

PART 2 - PRODUCTS (NOT USED)

PART 3 - EXECUTION (NOT USED)

END OF SECTION

SECTION 01700A

CONTRACT CLOSEOUT

PART 1 - GENERAL

1.01 SUMMARY

A. Work Included: This section outlines the procedure to be followed in closing all contracts.

1.02 RELATED WORK

A. Section 01720A – Project Record Documents.

1.03 FINAL CLEANUP

The Contractor shall promptly remove from the vicinity of the completed work, all rubbish, unused materials, concrete forms, construction equipment, and temporary structures and facilities used during construction. Final acceptance of the work by the Department will be withheld until the Contractor has satisfactorily performed the final cleanup of the Site.

1.04 SUBSTANTIAL COMPLETION INSPECTION

A. The Department will not issue preliminary punchlist. After final cleaning and upon written notice from the Contractor that he has inspected the work and it is substantially completed, the Engineer will make a Substantial Completion Inspection with the Department and the Contractor present.

B. Upon completion of this Substantial Completion Inspection, the Engineer will generate and issue in writing a Substantial Completion Inspection punchlist of any particulars, which the Inspection reveals as defective or incomplete Work.

C. Each item in the punchlist shall have a time duration agreed upon by both parties which shall not exceed 10 calendar days. Punchlist items may be eliminated individually from the list when approved by the Engineer.

D. When the Contractor has corrected or completed the items as listed in the Engineer's written punchlist, inform the Engineer, in writing, that the required work has been completed. Upon receipt of this notice, the Engineer, in the presence of the Contractor, shall make the final inspection of the Project.

E. If the Contractor fails to complete any item of work within a time period equal to 100% of the agreed upon duration of time for all individual items, the Engineer will notify the Contractor in writing specifying the conditions pertaining thereto and directing the Contractor to comply with his directive. If the Contractor has not corrected such condition within 5 days of such notice, it shall be sufficient grounds for the Engineer to order the subject items discontinued and have them completely remedied in a timely manner at the expense of the Contractor.

F. No final estimate shall be issued by the Engineer until the Engineer has assured himself that the punchlist has been 100% completely finished and all other related documents are submitted.

G. After addressing punchlist items, the Contractor shall notify the Engineer accordingly. If the Engineer a) concurs that the Project is substantially completed, then the Engineer shall submit to the Contractor a written notice confirming that Substantial Completion has been achieved, or b) does not concur that the Project is substantially completed, then the Engineer shall submit to the Contractor a written letter indicating the outstanding items that need to be completed in order to achieve Substantial Completion. In this last case then a) Contractor shall work diligently to address the uncompleted items to achieve Substantial Completion and b) Contractor shall have no additional time to achieve Substantial Completion within the deadline stablished in the Contract Documents.

1.05 FINAL SUBMITTALS

A. No Contract will be finalized until all of the following have been submitted and approved in conformance with Section 01720A, Project Record Documents.

1. Record Drawings.

2. Manufacturers' Certificates of Proper Installation.

3. Material Tests and Certifications.

4. All Test Reports.

1.06 GUARANTEES, BONDS, AND AFFIDAVITS

A. No Contract will be finalized until all guarantees, bonds, certificates, licenses, warranty, C.O. and affidavits required for work or equipment as specified are satisfactorily filed with the Engineer.

1.07 RELEASE OF LIENS OR CLAIMS

A. No Contract will be finalized until satisfactory evidence of affidavit and release of claims have been submitted to the Department.

1.08 FINAL COMPLETION

A. Conditions precedent to achieving Final Completion:

1. Substantial Completion Inspection has been completed.

2. Substantial Completion Punchlist items have been addressed.

3. Substantial Completion has been achieved and confirmed in writing by the Engineer.

4. The Final Inspection has been completed and the Engineer has found all work satisfactory.

5. Final Submittals have been submitted to the satisfaction of the Engineer.

6. All guarantees, bonds and affidavits have been satisfactorily filed with the Engineer.

7. Satisfactory evidence of affidavit and release have been submitted to the Department.

B. Once all these conditions have been met, the Engineer shall issue a certificate of Final Completion and the Contractor will be allowed to make application for final payment.

PART 2 - PRODUCTS (NOT USED)

PART 3 - EXECUTION (NOT USED)

END OF SECTION

SECTION 01710A

CLEANING

PART 1 - GENERAL

1.01 SUMMARY

A. This Section specifies the maintenance of the work site in a clean, orderly, hazard-free condition.

1.02 QUALITY ASSURANCE

A. Conduct cleaning and disposal operations in accordance with local ordinances and anti-pollution laws. Rubbish, volatile wastes, and other construction wastes shall be neither burned nor buried on the work site, and shall not be disposed of into storm drains, sanitary drains, streams or other waterways.

B. Final cleaning shall be accomplished either by workmen experienced in cleaning operations or by professional cleaners.

PART 2 - PRODUCTS

2.01 ON-SITE WASTE CONTAINERS

A. Provide on-site waste containers for collection of waste materials, debris and rubbish.

2.02 CLEANING MATERIALS

A. Cleaning materials shall be as recommended by the manufacturer of the surface to be cleaned.

PART 3 - EXECUTION

3.01 SAFETY REQUIREMENTS

A. Maintain work site in accordance with local ordinances and anti-pollution laws applicable to work site cleanliness and in a neat, orderly and hazard-free condition until final acceptance of the work. Catwalks, accessible underground structures, work site sidewalks and walkways adjacent to the work site shall be kept free from hazards caused by construction activities.

B. Store volatile wastes including rags in covered metal containers, and remove from work site daily.

C. Prevent accumulations of waste which create hazardous conditions.

D. Artificially ventilate spaces which are not naturally ventilated when volatile or noxious substances are present in those spaces.

3.02 INTERIM CLEANING

A. Perform cleaning every workday for duration of the Work. Structures, grounds, and areas of the work site and public and private properties shall be maintained free from accumulations of waste materials and rubbish caused by construction operations on the work site. Place waste materials and rubbish in on-site containers.

B. Remove or secure loose material on open decks and on other exposed surfaces at the end of each day's work or more often to maintain work site in hazard-free condition. Prevent dislodgement of materials due to wind and other forces.

C. Wet down dry materials and rubbish to lay dust and prevent blowing dust.

D. Empty on-site waste containers whenever necessary so that trash overflow does not occur. Legally dispose of contents at either public or private dumping areas.

E. Control the handling of materials, debris and rubbish; do not drop or throw from heights.

F. Immediately remove spillages of fuels or oil or of construction-related materials from hauling routes or the site.

G. Perform cleaning operations so dust and other contaminants resulting from cleaning processes will not fall on wet, newly painted surfaces.

3.03 FINAL CLEANING

A. In addition to the cleaning performed above, in preparation for final inspection, remove grease, dust, dirt, rust stain from surfaces. Remove labels, fingerprints and other foreign materials from exposed exterior finished surfaces. Flush down all manhole covers and frames, valve boxes, and areas leaving such surfaces clean of all sand, laitance, etc.

B. The Contractor shall at all times during the execution of this Contract keep the work site free and clear of all rubbish and debris. As soon as the work is completed, the accumulated rubbish or surplus materials shall be promptly removed. The Contractor shall also restore in an acceptable manner all property, both public and private, which has been displaced or damaged during the prosecution of the work, and shall leave the site and vicinity unobstructed and in a neat and presentable condition.

C. In the event of delay exceeding two days after written notice is given to the Contractor by the Engineer to remove such rubbish or materials or to restore displaced or damaged property, the Engineer may employ such labor and equipment as he may deem necessary for the purpose, and the cost of such work, together with the cost of supervision, shall be charged to the Contractor and shall be deducted from any monies due him.

D. The project shall not be considered as having been completed until all rubbish and surplus materials have been removed and disposed of properly.

END OF SECTION

SECTION 01720A

PROJECT RECORD DOCUMENTS

PART 1 - GENERAL

1.01 SUMMARY

A. The Contractor shall maintain at the site one record copy of the following:

1. Record Drawings. Record Drawings as used herein shall mean a drawing that reflects construction or design changes.

2. Record Specifications.

3. Addenda.

4. Change Orders and other modifications of the Contract.

5. Engineer's written orders or instructions.

6. Field test records.

7. Construction photographs.

B. The records listed above are to be made available for the Engineer’s review at all times for all projects.

1.02 MAINTENANCE OF DOCUMENTS AND SAMPLES

A. Maintain documents in a clean, dry, legible condition and in good order. Do not use record documents for construction purposes.

1.03 RECORDS

A. Label each document "PROJECT RECORD" in neat large printed letters.

1. Do not conceal any work until as-built information is recorded by the Contractor's and, if so required, by the Department.

1.04 DRAWINGS

A. During the life of the Contract, maintain records of all deviations from the Plans and Specifications and prepare therefrom As-Built Record Drawings <u>showing correctly and accurately all changes and deviations made during construction to reflect the work as it was actually constructed. It is the responsibility of the Contractor to check the As-Built Record Drawings for errors and omissions prior to submittal to the Department and certify in writing that the As-Built Record Drawings are correct and accurate.</u>

B. Certification: The Contractor shall certify on as-built record drawings all other actual

constructed details and information as may be required by the Department.

PART 2 - PRODUCTS (NOT USED)

PART 3 - EXECUTION (NOT USED)

END OF SECTION

SECTION 03200

CONCRETE REINFORCEMENT

PART 1 - GENERAL

1.01 QUALITY ASSURANCE

A. Codes and Standards: Comply with the latest edition of the following codes, specifications, and standards, except where more stringent requirements are shown or specified:

1. ACI 117, Tolerances for Concrete Construction and Materials.
2. ACI 301, Specifications for Structural Concrete for Buildings.
3. ACI 315, Details and Detailing of Concrete Reinforcement.
4. ACI 318, Building Code requirements for Reinforced Concrete.
5. ACI 439.3R, Mechanical Connection of Reinforcing Bars.
6. AWS Dl.4, Structural Welding Code Reinforcing Steel.
7. CRSI, Manual of Standard Practice.
8. CRSI, Placing Reinforcing Bars.
9. Wire Reinforcement Institute, Manual Standard Practice.

1.02 REFERENCES

A. American Society for Testing and Materials (ASTM), latest edition:

1. A82 Specification for Steel Wire, Plain, for Concrete Reinforcement.
2. A184 Specification for Fabricated Deformed Steel Bar Mats for Concrete Reinforcement.
3. A185 Specification for Steel Welded Wire Fabric, Plain, for Concrete Reinforcement.
4. A496 Specification for Steel Wire, Deformed, for Concrete Reinforcement.
5. A497 Specification for Steel Welded Wire Fabric, Deformed, for Concrete Reinforcement.
6. A615 Specification for Deformed and Plain Billet-Steel Bars for Concrete Reinforcement.
7. A775 Specification for Epoxy-Coated Reinforcing Steel Bars.

8. C1116 Specification for Fiber-reinforced Concrete and Shotcrete.

1.03 SUBMITTALS

A. General:

1. Submit shop drawings for fabrication, bending, and placement of concrete reinforcement.

   a. Comply with ACI 315 showing bar schedules, stirrup spacing, diagrams of bent bars, arrangement of concrete reinforcement and accessories.

   b. Include special reinforcement required at openings through concrete structures.

2. Shop drawings made from sepias (or other reproductive methods) of the structural drawings will not be accepted and shall be cause for resubmittal.

B. Selection of splices: Splices shall be full tension, unless noted otherwise.

1. Splices noted on the Drawings to be compression splices shall be furnished by one of the following:

   a. Compression lap splices according to ACI 315.

   b. Mechanical compression only connectors according to ACI 439-3R, staggered 1/2 Class "C" lap length and maintaining not less than 1/4 the total tensile capacity of any column face.

   c. Full penetration welds staggered not less than 18 diameters.

2. Splices shown on the Drawings as either Class "A" or Class "B" may be one of the following:

   a. Class "B" lap splices.

   b. Class "A" (but not less than compression lap) lap splices staggered not less than one Class "B" lap length.

      1) Exception: This shall not be allowed when shown as class "B" in a location, which by design, has already accounted for other continuing bars or staggered splices.

   c. Appropriate mechanical connectors according to ACI 439-3R staggered not less than 24 diameters.

d. Full penetration welds staggered not less than 24 diameters.

3. Unless otherwise noted in the Drawings, reinforcing shall be spliced to develop the full strength of the bar in either tension or compression. Those splices shall be furnished by one of the following:

   a. Class "B" lap splices where only 1/2 of the total rebars are spliced at any one floor.

   b. Full penetration welds staggered not less than 36 diameters.

   c. Appropriate mechanical connectors according to ACI 439-3R staggered not less than 36 diameters.

4. Total steel at lap splices shall not exceed 8 percent for columns or shear wall cores containing the spliced bars.

   a. All bars may be lapped at one section for up to 4 percent steel.

   b. 1/2 of the bars may be lapped for up to 5.3 percent steel.

   c. 1/3 of the bars may be lapped for up to 6 percent steel.

   d. Above 6 percent steel, other splice choices shall be used.

5. Where staggered lap splices are used, provide a mixture of bar sizes as appropriate where vertical bar size changes on the Drawings.

6. Where different size bars are lap spliced, the length of splice may be based on the smaller bar size. If there is a larger quantity of the smaller bar size, the splice length shall be based on the larger bar.

7. It shall be the responsibility of the reinforcing detailer to determine the concrete strength at the point of a lap splice, the bar position (top or other), bar spacing, confinement condition based on ties or stirrups or edge condition to select the proper lap length.

8. Increase laps for bundled bars according to ACI 318, with number based on total bars in group including lapped bars.

C. Detailing of Splices: Placing shop drawings shall specifically show splice lap lengths where they occur. Bar diameter lap tables and references to other charts are not acceptable.

D. Staggered Laps Required: Provide staggered laps in any member as necessary to keep space between bars within splice zone at least 1 inch or 1 bar diameter clear.

E. Detailing of Bar Placement: For any bar other than those placed at an edge condition, between edge condition or openings, or any other location where the bar cannot be shifted longitudinally, a dimension shall be shown from an identifiable building grid, wall, or edge to at least one end of the bar.

F. Congested Areas of Placement: For any conditions resulting in bar spacing less than 2 diameters clear or where the placement of bars in one member requires critical templating to allow bar placement in an intersecting member, furnish details of sufficient scale to show clearances, spacing, and arrangements for properly placing those bars.

G. Accessories: Show accessories, supports, chairs, bolsters, and spacers necessary to complete the installation. Where supports are beyond the scope of CRSI detailing standards and custom designed supports are required, provide engineering calculations demonstrating the capacity of the system.

H. Flat Plates: Provide not less than 3 separate drawings of each plate separately showing bottom bars, top bars, and accessories.

I. Welding Submittals:

1. If welding of reinforcing bars is to be included as part of the work, submit the following:

   a. A complete welding procedure specification according to AWS Dl.4.

   b. A certified chemical analysis of the steel to be welded.

   c. Carbon equivalence calculations according to AWS Dl.4.

   d. Qualification papers for welders who will be employed on the project. Welders shall have passed a qualification test within a 12 month period before the work or furnish a statement from a testing agency acceptable to A/E that they have observed or tested that welder's work under similar requirements within the past 6 months.

1.04 SUBSTITUTIONS

A. Reinforcing Splicing:

1. Splices shown in the Drawings shall be considered mandatory for bidding purposes.

2. Alternative methods of providing for splices are available within the constraints of this specification and ACI 318, but require approval of Engineer.

3. If alternative splices are desired, the shop drawing submitted shall clearly indicate the change and include authorization by any other subcontractors involved in the change.

PART 2 - PRODUCTS

2.01 REINFORCING MATERIALS

A. Comply with Chapter 5 of ACI 301.

B. Reinforcing Steel:

1. Bars #3 through #11 shall be deformed bars according to ASTM A615 Grade 60 and according to the additional requirements of Paragraph 5.2.2.1 of ACI 301.

2. Bars #2 in size shall be plain round meeting A615/A-96a Grade 40.

3. Welded wire fabric shall be of plain wire. Welded wire fabric shall be galvanized at exterior exposed concrete.

4. Unless indicated otherwise the minimum concrete protective cover specified in Paragraph 5.7.1 of ACI 301 is the specified cover for this project unless indicated otherwise.

C. Epoxy-Coated Reinforcing Bars: ASTM A775.

D. Form-Saving Splice Connectors: Flanged devices to allow insertion of threaded reinforcing bars into a previously formed face. Available products include, but are not limited to:

1. Form Saver by Lenton.

2. DB-SAE Splices System by Dayton Superior.

3. Rebar Flange Coupler by Williams Form Engineering Corp.

E. Mechanical Splice Couplers: Proprietary products suitable for the use intended and listed in ACI 439-3R-83. Use “BarGrip XL System” by BarSplice Products Inc, or equal. Follow manufacturers written installation instructions.

F. Steel Wire: ASTM A82, plain, cold-drawn, steel.

G. Fabricated Deformed Steel Bar Mats: ASTM A184.

H. Welded Steel Wire Fabric: ASTM A185.

I. Deformed Steel Wire: ASTM A496.

J. Welded Deformed Steel Wire Fabric: ASTM A497.

K. Supports for Reinforcement: Provide supports for reinforcement including bolsters, chairs, spacers, and other devices for spacing, supporting, and fastening reinforcing bars and welded wire fabric in place. Use wire bar type supports complying with CRSI Class C or Class A as required acceptable.

1. For slabs-on-grade, use supports with sand plates or horizontal runners where base material will not support chair legs.

2. For exposed-to-view concrete surfaces and with legs of supports in contact with forms, provide supports with legs, either plastic protected according to CRSI, Class 1 or stainless steel protected according to CRSI, Class 2.

3. Provide custom supports as required to support top layer of mats and other special conditions not provided for within CRSI standards.

L. Fiber Reinforcement:

1. Manufacturers:

a. Fibermesh by Protex.

b. Forta-Ferro by Forta Corporation, Grove City, PA.

2. Comply for use in plain concrete as defined in ACI 318.1 and the following:

a. Fibers shall not be used as a replacement for any reinforcement required for structural purposes.

b. Blend fibers into the concrete mix according to manufacturer’s written instructions.

c. Provide control joints according to Section 5.2 of ACI 318.1.

d. Fibers shall comply with ASTM C1116-95.

PART 3 - EXECUTION

3.01 PLACING REINFORCEMENT

A. Comply with Concrete Reinforcing Steel Institute's recommended practice for "Placing Reinforcing Bars", for details and methods of reinforcement placement and supports, and as specified.

B. Clean reinforcement of loose rust and mill scale, dirt, and other materials that reduce or destroy bond with concrete.

C. Accurately position, support, and secure reinforcement against displacement by formwork, construction, or concrete placement operations. Locate and support reinforcing by metal chairs, runners, bolsters, spacers, and hangers as required.

D. When any reinforcing bar is placed projecting either horizontally or vertically from a given element to subsequently lap with other reinforcing bar, verify the detailed lap length will be achieved.

1. Report any deviation to the Engineer for correction before placing concrete in the first element.

2. Bar projections resulting in laps shorter than the detailed laps shall be considered rejected, and corrective measures shall be taken at the direction of the Engineer with no additional cost to the Department.

3. In lieu of providing traditional lapped splices that require increased exposure of existing bars, contractor may use mechanical splice couplers. In such case, exposure of existing bars may be limited to 3 inches, or as required by coupler manufacturer to obtain full strength splice.

E. Place reinforcement to obtain at least minimum coverages for concrete protection.

1. Arrange, space, and securely tie bars and bar supports to hold reinforcement in position during concrete placement operations.

2. Set wire ties so ends are directed into concrete, not toward exposed concrete surfaces.

F. Install welded wire fabric in as long lengths as practicable.

1. Lap adjoining pieces at least one full mesh plus 2 inches and wire splices.

2. Offset end laps in adjacent widths to prevent continuous laps in either direction.

G. Provide the Engineer with not less than 48 hours' notice before starting any welding of reinforcing bars.

1. Welding of reinforcing bars shall only be allowed under the direct supervision of the Engineer.

2. Welding of crossing reinforcing bars is not allowed.

3. Any bars with unauthorized or unacceptable welds shall be replaced at no additional cost to the Department.

END OF SECTION

SECTION 03710

REMOVING EFFLORESCENCE FROM CONCRETE

PART 1 - GENERAL

1.01 SUMMARY

A. This specification provides guidance on removing efflorescence from concrete using chemical solvents.

B. Efflorescence is a condition wherein white deposits form on the surface of the concrete. These deposits often contain calcium, sodium and potassium hydroxides or carbonates, bicarbonates, chlorides and sulfates of calcium and magnesium.

C. The surface deposits may originate as soluble compounds within the concrete or in the soil. These compounds combine with water and gradually migrate in solution to the wall surface, where they remain when the water evaporates. Surface deposits may also result from acid etching with hydrochloric acid, which is sometimes applied to roughen the concrete surface.

D. Surface deposits originating from within the concrete are usually soluble and may be removed by mechanical abrasion means, by scrubbing with water alone or washing with water under high pressure.

E. Surface deposits composed mainly of calcium acid carbonate and magnesium acid carbonate from the soil or of calcium hydroxide should be washed off with water as soon as possible. These deposits are water-soluble for only a brief period of time after reaching the atmosphere, after which the carbon dioxide converts them to water-insoluble calcium carbonate and magnesium carbonate, which are impossible to remove without the use of acids.

F. Safety Precautions:

1. DO NOT save unused portions of stain-removal materials.

2. DO NOT store any chemicals in unmarked containers.

3. NOTE: EXCELLENT VENTILATION MUST BE PROVIDED WHEREVER ANY SOLVENT IS USED. USE RESPIRATORS WITH SOLVENT FILTERS.

4. No use of organic solvents indoors should be allowed without substantial air movement. Use only spark-proof fans near operations involving flammable liquids.

5. Provide adequate clothing and protective gear where the chemicals are indicated to be dangerous.

6. Have antidote and accident treatment chemicals readily available where noted.

PART 2 - PRODUCTS

2.01 MATERIALS

A. NOTE: Chemical products are sometimes sold under a common name. This usually means that the substance is not as pure as the same chemical sold under its chemical name. The grade of purity of common name substances, however, is usually adequate for stain removal work, and these products should be purchased when available, as they tend to be less expensive. Common names are indicated below by an asterisk (*). Use one of the following solvents (see Section 3.02 A. below for mixing proportions):

1. Acetic Acid ($C_2H_4O_2$):

   a. A colorless pungent liquid acid that is the chief acid of vinegar and that is used especially in synthesis (as of plastics).

   b. Other chemical or common names include Vinegar acid*. (Vinegar itself, which contains about 4% acetic acid, may be suitable for some purposes requiring acetic acid.)

   c. Potential hazards: CAUSTIC TO FLESH; CORROSIVE TO CONCRETE, STEEL, WOOD AND GLASS.

   d. Available from chemical supply house (both commercial and scientific), drugstore or pharmaceutical supply distributor, grocery store or supermarket, or hardware store.

2. Hydrochloric Acid (30-35%):

   a. A strong corrosive irritating acid.

   b. Other chemical or common names include Chlorhydric acid; Hydrogen chloride; Muriatic acid* (generally available in 18 degree and 20 degree Baume solutions); Marine acid*; Spirit of salt*; Spirit of sea salt*.

   c. Potential Hazards: TOXIC, CAUSTIC TO FLESH; CORROSIVE TO CONCRETE, STEEL, WOOD AND GLASS; FLAMMABLE.

   d. Available from chemical supply house, drugstore or pharmaceutical supply distributor, or hardware store.

3. Phosphoric Acid (H_3PO_4):

   a. A syrupy or deliquescent tribasic acid used especially in preparing phosphates (as for fertilizers), in rust-proofing metals, and as a flavoring in soft drinks.

   b. Other chemical or common names include Orthophosphoric acid.

c. Potential Hazards: CAUSTIC TO FLESH; CORROSIVE TO CONCRETE, STEEL, WOOD AND GLASS.

d. Available from chemical supply house or hardware store.

4. Calcium Hydroxide:

a. Other chemical or common names include Calcium hydrate*; Hydrated lime*; Lime hydrate*; Slaked lime*.

b. Potential Hazards: SKIN IRRITANT; AVOID INHALATION OF THE DRY POWDER.

c. Available from chemical supply house, construction materials yard, construction specialties distributor, garden and lawn supply center, or hardware store.

B. Filler material such as paper pulp.

C. Mineral water.

D. Plastic sheeting.

E. Clean dry towels for blotting the area after treatment.

F. Masking tape.

G. Accessible source of water, soap and towels for washing and rinsing in case of emergencies associated with the use of chemicals.

2.02 EQUIPMENT

A. Glass or ceramic container for mixing the poultice solution.

B. Rubber of plastic pale for mixing the acid and water solution.

C. Wooden utensil for stirring the ingredients.

D. Wood or plastic spatula.

PART 3 - EXECUTION

3.01 PREPARATION

A. Remove as much as possible of the efflorescence using water jet blasting or other mechanical means such at a light-duty chipping hammer.

B. Provide adequate wash solutions (i.e. water, soap and towels) before starting the job.

C. Whenever acid is used, the surface should be thoroughly rinsed with water as soon as its action has been adequate. Otherwise it will continue etching the concrete even though the stain is gone.

3.02 ERECTION, INSTALLATION, AND APPLICATION

A. NOTE: DO NOT TRY MORE THAN ONE TREATMENT ON A GIVEN AREA UNLESS THE CHEMICALS USED FROM PRIOR TREATMENT HAVE BEEN WASHED AWAY.

B. Mix in a glass or ceramic bowl one of the following combinations:

1. 1 part hydrochloric acid in 19 parts water, OR

2. 1 part phosphoric acid in 9 parts water, OR

3. 1 part phosphoric acid plus 1 part acetic acid in 19 parts water.

C. CAUTION: ALWAYS ADD ACID TO WATER RATHER THAN VICE-VERSA. ADDING WATER TO CONCENTRATED ACID CAN CAUSE THE WATER TO BECOME SUPER-HEATED AND TURN TO STEAM, WHICH CAN RESULT IN ACID SPLASHING ON THE USER.

D. Saturate the concrete with clean, clear water.

E. Begin by using the first mixture listed above and apply to the affected concrete surface with a stiff, non-metallic bristle brush.

F. Thoroughly rinse the area with clean, clear water and allow to dry.

G. If the first mixture is unsuccessful in adequately removing the efflorescence, repeat the treatment using the other mixtures listed in the order displayed until successful results are achieved.

H. For concrete heavily laden with potential efflorescence:

1. Remove all visible surface salts, following the steps directly above.

2. Follow by applying a poultice of paper pulp saturated in water and allow to dry.

3. Remove the dried poultice using a wood or plastic spatula.

4. Thoroughly rinse the surface with clean, clear water and allow to dry.

5. Repeat as necessary to achieve the desired level of cleanliness, which shall be defined as the level of cleanliness required by the coating manufacturer's representative. In general, this shall mean that no efflorescence or laitance is visible to the naked eye, and the pH of the walls surface is between 9.0 and 11.0.

3.03 ADJUSTING/CLEANING

A. Remove and dispose all chipped off efflorescence from wall and floor surfaces.

B. If there is a supply of dilute acid to be disposed of when work is complete, neutralize it by stirring in 3 pounds of powdered calcium hydroxide for every gallon of the dilute (1-3) acid. The resulting solution is a harmless mixture of calcium hydroxide and calcium fluoride. Check the resulting pH and adjust if necessary before disposing the excess cleaning solution.

3.04 FIELD QUALITY CONTROL

A. Visual inspection of all surfaces subject to efflorescence removal shall be performed by the Engineer and coating manufacturer's representative. The coating manufacturer's representative must approve in writing that efflorescence has been satisfactorily removed from surfaces to receive the coating system prior to the application of the coating.

END OF SECTION

SECTION 03721

PREPARATION FOR RESURFACING CONCRETE

PART 1 - GENERAL

1.01 SECTION INCLUDES

A. Preparation of concrete surfaces to be rehabilitated.

B. Work in this Section includes Water Pressure cleaning, abrasive blast cleaning, concrete removal and testing for pH, moisture content, and soundness of concrete.

1.02 RELATED SECTIONS

A. Section 01010A - Summary of Work.

B. Section 01410A - Testing and Testing Laboratory Services.

C. Section 03732 - Concrete Repair.

1.03 SCHEDULING

A. Perform abrasive blast cleaning and water pressure cleaning of work between the hours of 7 am to 5 pm.

PART 2 - PRODUCTS

2.01 MATERIALS

A. Abrasive Blasting Material: Clean abrasive blasting material free of impurities passing through 200 sieve.

PART 3 - EXECUTION

3.01 EXAMINATION

A. Verify that surfaces are ready to receive work.

3.02 PREPARATION

A. Prepare and protect adjacent work from damage.

3.03 REHABILITATION CLEANING

A. Prior to any rehabilitation work, the concrete surface shall be thoroughly cleaned to produce a clean interior surface free of all coatings, sand, rock, roots, sludge or other

deleterious materials.

B. During all cleaning and preparation operations all necessary precautions shall be taken to protect the concrete surface from damage. During these operations, precautions shall also be taken to insure that no damage is caused to public or private property adjacent to or served by these structures.

C. All sludge, dirt, sand, rock, grease, roots and other solid or semi-solid materials resulting from cleaning or surface preparation operations shall be removed from the immediate work site where it was removed.

D. All waste materials and debris removed during these operations shall be removed and disposed into a permitted sanitary landfill by the Contractor, at its sole cost and expense.

E. The Contractor is advised that he shall not dispose of this material by illegal dumping on private or public property, by sale to others, or any means other than those given above.

F. Any load of material, or any portion thereof, disposed of in a non-permitted fashion will result in a charge to the Contractor in the amount of $500.00 per load, or any portion thereof, which sum will be deducted by the Department from any monies due the Contractor. This charge is in addition to any other damages specified elsewhere or fines by any other authority.

G. The Contractor shall keep his haul route and work area(s) neat and clean and reasonably free of odor, and shall bear all responsibility for the clean-up of any spill which occurs during the transport of cleaning/surface preparation by-products and the clean-up of any such material which is authorized by or pursuant to this Contract and in accord with applicable laws and regulations. The Contractor shall immediately cleanup any such spill, or waste. If the Contractor fails to cleanup such spill or waste immediately, the County shall have the right to cleanup or arrange for its cleanup and may charge to the Contractor all costs, including administrative cost and overhead, incurred by the County in connection with such cleanup. The County may also charge the Contractor any cost incurred or penalties imposed on the County as a result of any spill, dump, or discard. Under no circumstances is this material to be discharged into the waterways or any place other than where authorized to do so by the appropriate authority. The term "Contractor" as used in this section shall include the Contractor's subcontractors and other contractors.

H. The general requirements for vehicles hauling such waste materials are as follows: Transport vehicles must be of type(s) approved for this application by Dade County, HRS, and the State of Florida FDOT. General requirements are that the vehicles have watertight bodies, that they be properly equipped and fitted with seals and covers to prohibit material spillage or drainage, and that they be cleaned as often as is necessary to prevent deposit of material on roadways. Vehicles must be loaded within all legal weight limits and operated safely within all traffic and speed regulations.

I. The routes used by the Contractor for the conveyance of this material on a regular basis shall be subject to approval by the governing authority having jurisdiction over such

routes.

3.04 PREPARATION AND INSPECTION OF CONCRETE SURFACES

A. Preparation of Concrete Surfaces

1. Pressure Cleaning: The Contractor shall remove grease, grime, sludge, loose and deteriorated concrete loose coatings and contaminants in the areas that are to be lined by Pressure Cleaning. The cleaning operation shall conform to:

   a. Pressure Cleaning shall be used to provide a clean, contamination-free, roughened and sound surface.

   b. Equipment shall sustain nozzle water pressures at a level suitable to achieve the desired surface properties specified herein.

   c. Use the equipment in accordance with the manufacturer's instructions. Organize the work to thoroughly cover the area specified for repair.

   d. Particulate waste created by pressure cleaning shall be removed and disposed of in accordance with this Section. All of the waste or debris created shall be reclaimed and not allowed to move on downstream.

   e. The pressure cleaning operation shall conform to all local, state and federal air quality standards and regulations.

2. SSPC-SP13 / NACE No.6 Surface Preparation of Concrete: The Contractor shall remove loose and deteriorated concrete and all existing coatings and contaminants by Abrasive Blast Cleaning, Ultra High Pressure Jetting, and/or Mechanical Cleaning in accordance with SSPC-SP13 / NACE No.6 the Surface Preparation of Concrete.

   a. Prior to preparing the surface, care shall be taken to prevent damage to structures, equipment and conveyors. Pumps and valves shall be shielded, covered, or otherwise protected to prevent the entrance of abrasive material (if abrasive blast cleaning is used) or other cleaning material.

   b. Determine type of nozzle, nozzle pressure, and blasting techniques required for the abrasive blast cleaning, high/ultra-high pressure jetting and/or mechanical cleaning in order to expose fine aggregate with occasional exposure of coarse aggregate; maximum 1/16-inch reveal.

   c. It is intended that the sandblasting will alter the profile of the concrete to achieve a minimum ICRI-CSP5 or greater on all walls and overhead concrete, and an ICRI-CSP3 or greater on the floor.

   d. After surface preparation of concrete is complete, cracks, voids, dust and spent abrasive material (if abrasive blast cleaning is used) shall be removed from the surfaces by pressure cleaning.

e. The surface preparation of concrete operation shall conform to all local, state and federal air quality standards and regulations

3.05 REMOVAL OF DETERIORATED CONCRETE

A. Removing Deteriorated Concrete: After pressure cleaning and surface preparation of concrete, damaged concrete substrates shall have all contaminated concrete removed by scabbling, chipping, grinding, brushing, blasting or other methods to a depth where all the white calcium sulfate is removed and only hard grey concrete with a surface pH of 7.0 to 11.0.

B. Any reinforcing steel exposed by removing deteriorated concrete shall be thoroughly cleaned by sandblasting to remove all contaminated concrete and rust particles.

C. Immediately after the cleaned reinforcing steel is inspected and accepted by the Engineer, the Contractor shall place a protective coating on the exposed reinforcing steel per Specification Section 03732, Concrete Repair.

D. When the deteriorated concrete is removed, the Contractor shall thoroughly clean the surface to remove all fines and deleterious materials that will adversely affect the bond of the proposed repair material.

3.06 INSPECTION OF SURFACES

A. Inspection of Concrete Surfaces: All surfaces where deteriorated concrete has been removed will require inspection by the Engineer and repair product manufacturer's representative. The repair product manufacturer's representative shall approve in writing that the concrete surface is sound prior to commencement of the repair operation. The surfaces will be tested for roughness, acidity and moisture. Roughness shall be in accordance with the manufacturer's product specifications. If the pH of the surface is less than 9.0 additional concrete shall be removed to a depth where the surface reading is equal to or greater than a pH of 9.0. Moisture readings for the surface of the concrete will be performed to verify the specification requirements of the manufacturer of the repair and coating materials.

3.07 REPAIR AND ACCEPTANCE OF CONCRETE SURFACE

A. Repair concrete after waterblasting and sandblasting through methods specified in Section 03732, Concrete Repair.

B. Acceptance: The Contractor and/or Manufacturer's Representative shall measure the surface pH, moisture content and temperature of the prepared concrete surface prior to beginning the coating operation. The acceptable ranges, as recommended by the coating manufacturer, shall be used to determine whether coating application may proceed and shall determine the choice of primer to be applied. The Contractor shall also check the concrete surfaces for residual laitance by visual inspection with magnification if necessary and by primer application on suspect areas. If the primer does

not penetrate the concrete surface by turning the surface dark and the laitance area can be visually detected; the Contractor shall not accept the surface and shall have the area sandblasted and/or waterblasted again for laitance removal.

C. Prior to the application of the coating product, the Engineer and coating manufacturer's representative shall inspect the different surfaces and test results. The coating manufacturer's representative must approve in writing that the surfaces are sound prior to the application of the coating.

3.08 FIELD QUALITY CONTROL

A. Field inspection and testing will be performed by the Engineer and coating manufacturer's representative and per coating manufacturer's published written instructions so as not to void any warranties provided.

B. Final Surface Inspection: Check surface pH and moisture content of the concrete to comply with the requirements of the coating manufacturer for pH and moisture content.

C. Test concrete for calcium chloride and moisture content during the execution of the Work.

END OF SECTION

SECTION 03732

CONCRETE REPAIR

PART 1 - GENERAL

1.01 SECTION INCLUDES

A. Preparation of concrete and application of repair materials.

B. Repair and Restoration of concrete surfaces.

C. Repair of concrete internal reinforcement.

1.02 RELATED SECTIONS

A. Section 03200 – Concrete Reinforcement

B. Section 03710 – Removing Efflorescence from Concrete

C. Section 03721 – Preparation for Resurfacing Concrete

1.03 REFERENCES

A. ANSI/ASTM A82 - Cold Drawn Steel Wire for Concrete Reinforcement.

B. ANSI/AWS D1.4 - Structural Welding Code for Reinforcing Steel.

C. ASTM A615 - Deformed and Plain Billet-Steel Bars for Concrete Reinforcement.

D. ASTM C33 - Specifications for Concrete Aggregates.

E. ASTM C150 - Portland Cement.

F. ASTM C404 - Aggregates for Masonry Grouts.

G. ASTM C882 - Bond Strength of Epoxy Resin Systems Used with Concrete.

H. ASTM D638 - Test Method for Tensile Properties of Plastics.

I. ASTM D695 - Compressive Properties of Rigid Plastics.

J. ASTM D790 - Flexural Properties of Plastics and Electrical Insulating Materials.

1.04 SUBMITTALS

A. Product Data: Indicate product standards, physical and chemical characteristics, technical specifications, limitations, maintenance instructions, and general recommendations regarding each material.

B. Manufacturer's Certificate: Certify that specified products meet or exceed specified requirements, including NSF compliance where required.

C. Proposed curing method(s) for patching mortar. Submit proposed method in writing along with manufacturer’s written instructions for curing.

1.05 PROJECT RECORD DOCUMENTS

A. Accurately record actual locations of structural reinforcement repairs, type of repair, and extent.

1.06 QUALITY ASSURANCE

A. Perform welding work in accordance with ANSI/AWS D1.4.

B. Concrete patching material and resurfacing mortar shall be by the same manufacturer, and shall be approved by protective coating manufacturer.

1.07 QUALIFICATIONS

A. Materials Manufacturer: Company specializing in manufacturing the products specified in this Section with minimum three years documented experience.

B. Applicator: Company specializing in concrete repair approved by manufacturer.

C. Design reinforcement splices under direct supervision of a Professional Structural Engineer experienced in design of this Work and licensed in the State of Florida.

1.08 DELIVERY, STORAGE, AND HANDLING

A. Deliver, store, protect and handle products to site under provisions of Sections 01600A, Material and Equipment Shipment, Handling, Storage, and Protection and 01660A, Site Access and Storage.

B. Comply with instructions for storage, shelf life limitations, and handling.

PART 2 - PRODUCTS

2.01 PRE-QUALIFIED VENDORS

A. The Work shall be completed by a Department-approved, pre-qualified protective coating services vendor.

B. All materials for repair mortar, resurfacing mortar, and epoxy coating shall come from the same manufacturer. In the event that an epoxy coating vendor does not carry all 3 products, the coating vendor shall approve in writing the use of a competitor's repair mortar and/or resurfacing mortar. In no case shall the Warranty be affected by the materials used.

2.02 REPAIR MORTAR

A. Concrete Repair Mortar: Cementitious mortar: Tnemec "Series 217 MortarCrete", Sika "SikaTop 123 Plus", Epoxytec "CPP" or approved equal.

B. Compressive Strength: ASTM C579 – Minimum 8,900psi @ 24 hours and 10,600 psi @ 28 days.

C. Initial Set – 60 minutes.

D. Final Set – 90 minutes.

E. To Topcoat – 12 hours.

F. Bonding Agent: Not required.

G. Color: Gray or Greenish Gray

H. Water: Clean and potable.

2.03 REINFORCEMENT MATERIALS

A. Per Specification Section 03200, Concrete Reinforcement.

B. Existing reinforcing steel that remains and is exposed shall be coated with Tnemec Series 20HS Pota-Pox, Epoxytec A-1 Primecoat, Sikatop 108 Armatec, Sika Armatec 110, or approved equal.

2.04 CONCRETE RESURFACING EPOXY MORTARS

A. Tnemec "Series 218 MortarClad", Sika "Sikagard 75 EpoCem" or Epoxytec "Mortartec Ceramico", or approved equal.

B. Mix mortars in accordance with manufacturer's instructions for purpose intended.

C. Mix components in clean equipment or containers. Conform to pot life and workability limits.

2.05 CRACK INJECTION SYSTEM

A. Hydrophilic urethane grout: Use 3M “Scotch- Seal Chemical Grout 5610”, De Neef Construction Chemicals “Hydro Active Flex”, BASF “Concresive 1230 IUG”, or approved equal.

B. Epoxy grout: Use Sika “Sikadur 35, Hi-Mod LV”, Euclid “Duralith LV”, BASF “Concresive Standard LVI”, or approved equal.

2.06 GRAVITY-FED EPOXY CRACK REPAIR SYSTEM

A. Use Sika “Sikadur 35, Hi-Mod LV”, Euclid “Duralith LV”, BASF “MasterInject 1500”, or approved equal.

2.07 JOINT SEALANT

A. Thiokol “2235M ”, Sika “Sikaflex 2c”, or approved equal.

B. Use backer rod (or joint filler) and primer as required per manufacturer’s written instructions.

2.08 JOINT FILLER

A. Joint filler material shall be closed cell rigid foam, cork, or non impregnated fiberboard such as “Conflex LT” by Masonite Corporation Building Products or approved equal.

B. The joint filler shall be compatible as a back-up material, with regard to the sealant not bonding to or being stained by the backup. If the joint filler is a material that will bond to the sealant, non-bonding polyethylene strip shall be used to cover the back-up material.

PART 3 - EXECUTION

3.01 EXAMINATION

A. Verify that surfaces are ready to receive work.

B. Beginning of installation means acceptance of substrate.

3.02 PREPARATION

A. Clean all concrete surfaces following the procedures of Section 03721, Preparation for Resurfacing Concrete.

B. Flush out cracks and voids with water to remove laitance and dirt.

C. For areas to be patched with mortar, remove any broken, unsound, or deteriorated substrate until solid concrete is found. The sound substrate must be clean with the appropriate surface profile for the specified material installation. Remove corrosion from steel where necessary. Clean surfaces mechanically, then wash and rinse with water.

D. Sandblast clean all exposed reinforcement steel surfaces. Mechanically cut away damaged portions of bar.

3.03 CONCRETE REPAIR WORK

A. General

1. Concrete surfaces which are to receive a protective coating system and which have deteriorated to the point where they are not suitable for coating shall be repaired with a repair mortar as specified.

2. All surfaces where repair materials will bond with existing concrete shall be given a minimum ICRI-CSP6 profile.

3. Repair all damaged rebar in accordance with ICRI Guidelines 310.1R.

4. The edges of the repaired area shall be sawcut or chipped perpendicular to the surface to a depth of at least ¼" thickness all around the repair area. Break out the complete repair area to a minimum ¼" depth to prevent feather edging during installation of repair mortar.

5. All concrete surfaces that are repaired and which are to receive a protective coating system shall be resurfaced using an approved resurfacing epoxy mortar as specified in Article 2.04 above.

6. The repair mortar (specified in Article 2.02) must be accepted by the protective coating manufacturer and the Engineer as to compatibility with the protective coating. The Contractor shall follow the instructions and recommendations of the repair mortar manufacturer as to application, giving special attention to their time requirements, depth of repair, surface preparation procedures and curing time.

B. Repair of Concrete Surface Deterioration Less than ¾" deep (Type 1 Repair)

1. Areas with repair depths less than ¾-inches shall be repaired using repair mortar.

2. Concrete surface shall be pressure-washed followed by abrasive blasting per specification Section 03721, Preparation for Resurfacing Concrete.

3. Remove loose material from deteriorated location until sound concrete is exposed.

4. Pressure clean all remaining exposed areas with air-blast.

5. Repair the concrete by patching with approved repair mortar.

C. Concrete Repair for Spalls less than 1 ½" Deep (Type 2 Repair)

1. Areas with repair depths less than 1-1/2 inches that have no exposed reinforcing steel shall be repaired using repair mortar.

2. Concrete surface shall be pressure-washed followed by abrasive blasting per specification Section 03721, Preparation for Resurfacing Concrete.

3. Remove loose material from deteriorated location until sound concrete is exposed.

4. Pressure clean all remaining exposed areas with air-blast.

5. Trowel apply repair mortar to fill void spaces and tamp into place. Do not feather.

D. Repair of Deep Spalls with Exposed Reinforcing Steel (Type 3 Repair)

1. Remove deteriorated concrete surrounding the steel reinforcement bars, including 3/4-inch minimum around the entire bar circumference.

2. The perimeter of the repair area should be saw-cut and chipped to form a nearly rectangular shape, and the edge shall have a cut face perpendicular to the surface. Use a powered chipping hammer, concrete saw or similar mechanical device as required to achieve desired rectangular profile and depth of cut. Chip out repair area as required to provide minimum required clearance around all rebar, both the existing rebar and the new bars that will be placed later.

3. Abrasive blast all exposed rebar to SSPC-SP10 / NACE No. 2 Near-white blast cleaning or SSPC-SP11 Power Tool Cleaning to Bare Metal.

4. Where damaged or visibly corroded rebar is found, remove all sections of damaged rebar. Cleanly cut the rebar at each end where the rebar is sound (no corrosion or loss of section). Once the extent of cut rebar is determined, provide splice with lap-spliced rebar of the same diameter as the existing rebar. Splice length shall not be less than 40 bar diameters. If most of the reinforcement in a wall section is damaged, all rebars shall be cut, and a new reinforcing mat shall be placed on the whole wall area, attached to the existing concrete with ½" diameter studs at 24" o.c. each way. When performing repairs using lapped rebar, repair area shall be expanded to extend the minimum lap splice length beyond the perimeter of the cut

bars plus 3-inches each direction.

5. In lieu of using lapped rebar splices, contractor may obtain splices with mechanical splice couplers as specified in Section 03200, Concrete Reinforcement. Manufacturer's specific directions for achieving splice shall be followed. When performing repairs using mechanical bar couplers, repair area shall be expanded to extend the distance to achieve the coupled splice plus 3-inches each direction.

6. Reinforcing steel shall at all times be protected from conditions conducive to corrosion until concrete is placed around it.

7. The surfaces of all reinforcing steel and other metalwork to be in contact with concrete shall be thoroughly cleaned of all dirt, grease, loose scale and rust, grout, mortar and other foreign substances immediately before the concrete is placed. Where there is delay in depositing concrete, reinforcing shall be re-inspected and, if necessary, re-cleaned.

8. After cleaning, all new and existing rebar shall be coated with 5.0 to 7.0 mils DFT of Tnemec Series 20HS Pota-Pox, or approved equal. Protect surrounding concrete to prevent coating of concrete during coating of rebar.

9. Rebuild substrate using repair mortar as specified in Article 2.02. Build surface flush with original concrete surface, tamping mortar in place to ensure solid fill. If depth of repair exceeds 4-inches, contractor shall extend the repair mortar by adding pea gravel aggregate per manufacturer's written instructions.

E. Crack Injection (for cracks up to ¼" width)

1. Following initial water-blasting surface preparation, lightly grind crack surface to remove efflorescence where required. Create ¼-inch deep v-groove along full length of crack front to open up the crack face. Lightly water-blast to remove any dust or debris.

2. Leaking horizontal and vertical cracks: Cracks that are either actively leaking or show evidence of efflorescence (indicating prior leakage) shall be pressure-injected with hydrophilic urethane grout.

3. Non-leaking vertical cracks: Follow same procedure as for leaking cracks, but inject with approved epoxy grout.

4. Starting 6 inches away from the crack, drill injection holes at 45 degrees to intersect the crack at a minimum 6 inches deep from the crack surface.

5. Provide temporary entry ports in these drilled holes spaced 12 to 18 inches or as required to accomplish movement of fluid between ports. Provide temporary seal at concrete surface to prevent leakage of injected material.

6. When injecting urethane grout, first flush crack front with water. When using epoxy grout, air-blast to remove dust and debris from crack front.

7. After successful crack repair, continue wall preparation by grinding to remove excess injection material and temporary seal. Fill v-grooves with repair mortar and strike flush with wall face.

F. Gravity Feed Epoxy Crack Filling

1. Where specified, fill horizontal non-leaking cracks with low-viscosity epoxy.

2. Following initial water-blasting surface preparation, lightly grind crack surface to remove efflorescence where required. Create ¼-inch deep v-groove along full length of crack front to open up the crack face. Use compressed air to remove any dust or debris from crack face.

3. Crack or void must be clean and dry at time of application.

4. Pour epoxy into v-groove. Seal underside of member if necessary to prevent spillage.

5. Remove temporary seal and any excess epoxy.

6. Clean adjacent surfaces and blend finish.

G. Repair of Floor Construction Joints

1. Where specified, repair damaged concrete adjacent to floor joints.

2. Following initial water-blasting and abrasive blasting surface preparation, remove spalled concrete and any loose material along the joint to reach sound concrete.

3. Cut out existing joint filler to depth of repair.

4. Pressure clean the full interior of the joint with air-blast.

5. Install joint filler of same thickness as existing per Article 2.08.

6. Fill the sides of the joint with repair mortar and tamp in place.

7. Cut joint filler off to ½" below top of floor surface and fill joint with sealant.

H. Finish of Repaired Surface

1. General: The repaired concrete surface shall in general have a finish that will match the adjacent undamaged surface.

2. Surface Finish: "Ordinary Surface Finish" shall approximate the required finish for the protective coating system.

3. Procedure for Finishing: The final finish shall be flat and smooth as created by wood or steel float. The repair mortar manufacturer's requirements for finishing shall be strictly adhered to, particularly regarding work time and moisture requirements.

I. Curing

1. Curing of repaired concrete shall be in accordance with manufacturer's instructions. Contractor shall pay special attention to moisture (dampness) requirements for newly repaired areas. Do not allow repaired areas to dry out following repair.

2. Contractor shall protect newly repaired concrete from scarring or other damage.

3. Following recommended curing period, repaired surface shall receive specified resurfacing mortar along with all concrete surfaces (base slab shall not receive resurfacing mortar).

J. Cleanup

1. The Contractor shall provide a continuous cleanup operation for the concrete repair work. Sand, concrete debris, and other foreign materials shall be removed and disposed of daily in accordance with County policies.

2. At completion of the concrete repair work, remove all construction equipment, surplus material, debris and sand. Wash down and sweep the area clean prior to the beginning of the protective coating application. The Contractor is also required to provide a collection system to prevent material and debris from entering the flow of any part of the sewer system.

3.04 APPLICATION OF JOINT SEALANT

A. All existing joint seals shall be replaced as part of this Project. This includes wall joints, slab joints, expansion joints at columns and walkways, and any other sealed joints.

B. Remove old sealant prior to surface preparation.

C. Clean joint per standard surface preparation described in Section 03721, Preparation for Resurfacing Concrete.

D. Install sealant following installation of protective coating. Coating shall be continuous through joint.

E. Apply backer rod, joint filler or bond breaker tape and primer as directed by manufacturer's written instructions. Ensure that proper width to depth ratios are maintained.

F. Install sealant with gun and dry tool with spatula.

G. Sealant shall encapsulate full length of joint and shall be continuous over wall and slab surfaces to match existing sealant condition.

3.05 EPOXY MORTAR RESURFACING

A. Concrete vertical and overhead surfaces which are to receive a protective coating system - all concrete surfaces including walls, underslab, columns, gutters and troughs (excluding the base slab) - shall be resurfaced using epoxy mortar per Article 2.04 to fill all voids and bugholes and to create a smooth, monolithic surface that will alleviate outgassing when the coating is applied.

B. The Contractor shall rebuild the concrete surfaces to their original lines and shapes, including where damaged concrete has been removed and repaired as stated above.

C. The epoxy mortar resurfacing coat shall have a minimum thickness as required to achieve a fully-warranted system.

3.06 ACCEPTANCE OF CONCRETE SURFACE

A. The Contractor shall measure the surface pH, moisture content and temperature of the prepared concrete surface prior to beginning the coating operation. The acceptable ranges, as recommended by the coating manufacturer, shall be used to determine the choice of primer to be applied. The Contractor shall also check the concrete surfaces for residual laitance by visual inspection with magnification if necessary and by primer application on suspect areas. If the primer does not penetrate the concrete surface by turning the surface dark and the laitance area can be visually detected; the Contractor shall not accept the surface and shall have the area sandblasted or water blasted again for laitance removal.

B. Prior to application of the coating product, the Engineer and a repair product manufacturer’s representative shall inspect the surface with the Contractor. The product manufacturer’s representative shall approve in writing that the surface is acceptable prior to the coating application.

3.07 FIELD QUALITY CONTROL

A. All field inspection and testing required by the Contract Documents will be performed by the Contractor.

B. Concrete work shall be tested for calcium chloride content during the execution of the Work.

END OF SECTION

SECTION 09660

HIGH PERFORMANCE PROTECTIVE COATING

PART 1 - GENERAL

1.01 WORK INCLUDED

A. Scope: The work to be performed shall include furnishing of all labor, materials, tools, equipment, removals and disposal required for coating all concrete surfaces within the interior of the clarifier by a monolithic application of high-build, solvent-free 100% solids epoxy coating system on all surfaces scheduled to receive the Work as described under Section 01010A, Summary of Work, and indicated on the Contract Drawings. Procedures for surface preparation, cleaning, application and testing are described herein and in Section 03721, Preparation for Resurfacing Concrete**.**

B. Summary: This Specification covers the minimum requirements for installing an epoxy coating system that is formulated to provide corrosion protection, chemical and erosion resistance, abrasion resistance, impact resistance, and normal cleaning.

C. A listing of WASD Prequalified Protective Coating Services Vendors has been included as Appendix G of these Contract Documents.

1.02 REFERENCES

A. American Standards for Testing Materials (ASTM)

1. ASTM D-4263, Test Method of Indicating Moisture in Concrete by the “Plastic Sheet Method”.

2. ASTM D-4541, Test Method for Pull-off Strength of Coatings Using Portable Adhesion Testers.

3. ASTM D-4258, Standard Practice for Surface Cleaning Concrete for Coating.

B. Steel Structures Painting Council (SSPC)

1. SSPC-SP7 Brush Off Blast Cleaning.

2. SSPC-SP10 Near White Blast Cleaning.

3. SSPC-SP13/NACE No.6 Surface Preparation of Concrete.

C. International Concrete Repair Institute, (ICRI)

1. CSP-3 and CSP-5 Standard Guidelines.

2. ICRI 320.1R - Exposed Reinforcing bar (Rebar) Repair.

1.03 SUBMITTALS

A. Submit manufacturer's technical data and product literature indicating that the products comply with specified requirements.

B. Submit the Test Reports with the results of all testing performed prior and after the application of the coating product.

C. Submit the Rehabilitation Plan, which should outline the plan detailing locations, methods, materials and procedures for the concrete rehabilitation.

1.04 QUALITY ASSURANCE

A. Qualifications: A qualified contractor is defined as one with:

1. A minimum of five years of experience in installing similar systems.

2. Demonstrated financial stability in warranting work.

3. Approved by the manufacturer.

B. There will be a pre-job meeting attended by all personnel including Department, Contractor/Sub-contractor, Safety Engineer, Inspector and Coating Manufacturer Representative. Refer to Section 01150A, Project Schedule, Meetings and Reports.

C. All inspections of the installation shall be recorded and shall include the following information:

1. Time of day.

2. Weather conditions, (air and surface, humidity).

3. Description of surface preparation.

4. Thickness per coat.

5. Visual inspection of workmanship.

D. Report in writing to Engineer, with copy to manufacturer, of deficiencies that could impair work. Surfaces must be approved in writing the Coating Manufacturer Representative prior to application of coating.

1.05 DELIVERY, STORAGE AND HANDLING

A. All materials shall be delivered to the jobsite in their original, unopened containers with the proper, fully legible labels with product identification, printed instructions, lot numbers and shelf life expiration date for each component.

B. Materials should be stored in their tightly sealed original containers in a dry place at temperatures between 65 and 80 degrees F, out of direct sunlight, heat or other hazards.

1.06 WARRANTY

A. Manufacturer shall warrant that its products are free from defects. Manufacturer shall provide a materials warranty to the County for a period of THREE (3) years from the date of manufacture. Liability, if any, is limited to product replacement.

B. The manufacturer and the Contractor may also provide a joint warranty for the product installation for a period of THREE (3) years from date of installation. The Contract shall specifically stipulate what constitutes a failure of the coating system and the operating conditions for the coating system. Liability, if any, for the manufacturer is limited to product replacement and, for the Contractor, re-installation costs. This warranty specifically excludes liabilities for consequential or incidental damages.

C. Contractor shall, within a reasonable time after receipt of written notice thereof, repair defects in materials or workmanship, which may develop during the warranty period, and any damage to other work caused by such defects or the repairing of same, at his own expense and without any additional cost to the Department.

PART 2 - PRODUCTS

2.01 EXISTING PRODUCTS AND SPECIAL CIRCUMSTANCES

A. Specified concrete surfaces shall be thoroughly inspected.

B. Previous coating shall be removed by the method described in Section 03721, Preparation for Resurfacing Concrete, of these Specifications.

2.02 REPAIR MATERIALS

A. Repair concrete surfaces in accordance with Section 03732, Concrete Repair, of these Specifications. Repair materials must be compatible with the specified epoxy coating and shall be approved by the epoxy coating manufacturer.

2.03 COATINGS

A. Primer Coat

1. The purpose of a primer coat is to ensure the coating hangs properly and achieves acceptable edge retention.
2. The primer shall be a solvent-based epoxy primer.
3. The primer must possess a recoat window not to exceed 2 weeks.
4. The primer shall be compatible with the top coat system and pre-approved by the manufacturer, if submitted as approved equal.
5. Minimum Performance Requirements for Prime Coat:
   a. Salt Spray: ASTM B117 - No blistering, cracking, rusting or delamination of the film and no creepage at the scribe after 5,000 hours.
   b. Cyclic Salt Fog/UV Exposure: ASTM 5894 - No blistering, cracking, rusting or delamination of the film after 10,000 hours.
6. Specified materials are: Tnemec Series 20HS Pota-Pox, Wol-Coat 410 or approved equal.

B. Epoxy Topcoat

1. The coating system shall be used on all scheduled concrete surfaces (see section 1.01 A).
2. The epoxy coating system must be have the following properties:
   a. Epoxy coating system must be 100% solid, no VOCs.
   b. Epoxy coating system shall adhere to concrete surfaces with adhesion testing results in PSI to a minimum of 400.
   c. Epoxy coating system shall withstand freeze-thaw and wet-dry cycles without causing adverse changes to the cure and performance properties.
   d. Epoxy coating system shall be able to be applied by brush, roller and spray.
   e. Epoxy coating system shall have high impact resistance in order to meet the requirement set forth in the warranty.
   f. Epoxy coating system shall be high gloss and self-leveling with vertical and overhead thickness capability of 30 mils in one pass without sag.
   g. Epoxy coating system shall be able to tie back into itself, overcoat or repair itself indefinitely with proper preparation, but not involving abrasion.
   h. Epoxy coating system shall have a recoat window up to 72 hours without preparation.
   i. Epoxy coating system shall be capable of curing properly within the specified environment within 18 hours.
   j. Epoxy coating system shall be resistant to all forms of chemical or bacteriological

attack found in municipal sanitary water systems, including severe hydrogen sulfide, chlorine, and other treatment chemicals.

k. The coating system shall be an epoxy coating system. It shall exhibit a tensile strength (ASTM D-638) of 7,000 psi, a bond strength (ASTM D-4541) of 400 psi at 100% concrete failure, and a compressive strength (ASTM D-695) of 10,000 to 12,000 psi.

3. Minimum Performance Requirements for Topcoat:

a. Product must be able to be applied in coats of a minimum 16.0 mils dry film thickness each.

b. VOC Content: 0.10 lbs/gallon (12 grams/litre).

c. Immersion: ASTM 870 – No blistering, cracking, rusting or delamination of film after 2,000 hours continuous immersion in deionized water at 140°F (60°C), average of three tests.

d. Salt Spray: ASTM B117 - No blistering, cracking, rusting or delamination of the film and no creepage at the scribe after 10,000 hours.

e. Cyclic Salt Fog/UV Exposure: ASTM D5894 – No blistering, cracking, rusting or delamination of film and no more than 1/32” rust creepage at scribe after 10,000 hours exposure.

f. Humidity: ASTM D4585 – No blistering, cracking, rusting, or delamination of film after 2,000 hours exposure.

4. Specified materials are: Tnemec Series 22 Epoxoline, Wol-Coat 310 or approved equal.

PART 3 - EXECUTION

3.01 SURFACE PREPARATION

A. All the preparation and application steps in this specification shall be in accordance with the manufacturer’s instructions as well as the job site conditions and applicable Federal, State, and Local rules and regulations.

B. All cleaning shall be as outlined in the Society for Protective Coatings (SSPC) Surface Preparation Specification, National Association of Corrosion Engineers (NACE), and the International Concrete Repair Institute (ICRI) unless otherwise noted.

C. Prepare surfaces in accordance with manufacturer’s instructions and Section 03721, Preparation for Resurfacing Concrete, of these Specifications.

D. Concrete surface must be clean, dry and sound prior to application.

E. Remove concrete laitance, curing agents, form oils, or any other adhesion barriers to attain a sandpaper-like finish.

F. Any areas exposed to acid spillage shall be neutralized prior to coating.

G. Remove all sand and dust by means of vacuuming, from the area to be lined or coated.

H. If surfaces are subject to contamination, other than mill scale or normal atmospheric rusting, the surfaces shall be checked for chloride contamination, pressure washed, and acid or caustic pH residues neutralized, in addition to the specified surface preparation.

I. Oil, grease, soil, dust, etc., deposited on the surface preparation that has been completed shall be removed prior to painting according to SSPC-SP1 Solvent Cleaning under this Specification.

J. In the event that an existing coating's max recoat window has been exceeded, all surfaces to be overcoated must be thoroughly and uniformly de-glossed and scarified before the application of additional coatings.

K. All surfaces must be clean and dry prior to the application of any coatings.

L. Protect drains from being filled with self-leveling epoxies.

3.02 SAFETY WARNING

A. Precautions should be taken when working with these materials:

1. Use materials only in adequately ventilated areas.

2. Keep away from open flames.

3. Store in dry covered areas.

4. Epoxy products may cause skin irritation in certain individuals.

5. Workers should always wear protective clothing, gloves and eyewear when working with these products.

3.03 SURFACE INSPECTION

A. Contractor shall inspect surfaces with Engineer and Coating Manufacturer's Representative for acceptability of levelness, moisture content, pitch to drains and other critical factors at time of installation.

B. Report in writing to Engineer, with copy to manufacturer, of deficiencies that could impair work. Surfaces must be approved in writing by the Coating Manufacturer's Representative prior to application of coating.

C. Coating thickness shall be determined by the use of a properly calibrated "Nordson-Mikrotest" or "Positest" Coating Thickness Gauge (or equal) for ferrous metal. Please note that a "Tooke" gauge may be used on cementitious surfaces, and that use of the

"Tooke" gauge is classified as a destructive test.

3.04 CURING TIME

A. Coating shall be allowed to cure for at least 5 days at 75 degrees F, prior to placing into service.

3.05 PROJECT CONDITIONS

A. Maintain a minimum concrete surface temperature of 40 degrees F for a minimum of 24 hours before, during and after installation, until cured.

B. Concrete must be free of hydrostatic, capillary or moisture vapor pressure. Substrates in contact with ground must have a properly installed, effective vapor barrier to help prevent potential problems resulting from hydrostatic, capillary or moisture vapor pressure.

C. Concrete to receive Coating should have been designed and installed as approved by the Engineer to minimize cracking, curling, slab deflections and shall contain well designed control and isolation joints as approved by the Engineer.

D. Concrete containing lightweight aggregates is not a recommended substrate.

E. Provide ventilation, lighting, commercial exhaust fans or air movers, other safety equipment as required by current OSHA standards, and clean, drinkable water supply.

F. Protect adjacent surfaces from damage resulting from work of this trade. If necessary, mask and/or cover adjacent surfaces, fixtures, equipment, etc. by suitable means.

3.06 TEST FOR CONCRETE PROPERTIES

A. Concrete shall be cured for a minimum of 28 days prior to coating application.

B. The tensile strength of the concrete shall be tested using a portable adhesion gauge as outlined in ASTM D-4541. The concrete shall have a minimum tensile strength of 300 psi as verified by an elcometer test.

C. Check for excessive moisture content in concrete by using the Plastic Sheet Method described in ASTM D-4263 or the calcium chloride test method. Tests shall be performed in random areas on both horizontal and vertical surfaces. Moisture vapor transmission should be 3 lbs. or less.

3.07 PROTECTION OF SURFACES

A. Puddles of corrosive liquids must not be allowed to remain on the concrete substrate for prolonged periods. These areas should be flushed with clean water.

B. Drips from piping and valves must be eliminated whenever possible, because impinging

droplets accelerate failure by erosion as well as chemical attack.

C. Areas where physical damage has occurred should be repaired before corrosive solutions can attack.

D. Periodic cleaning, (housekeeping) is required to ensure the appearance of the coating is maintained. Dust, dirt and debris can cause scratching and discoloration.

3.08 PRETREATMENTS

A. When specified, the surface shall be pretreated in accordance with the specified pretreatment prior to application of the prime coat of paint.

3.09 STORAGE

A. Materials shall be delivered to the job site in the original packages with seals unbroken and with legible unmutilated labels attached. Packages shall be available for inspection by the Department. All coating materials shall be stored in accordance with the Manufacturer’s latest written recommendations. The Contractor is responsible for following the Manufacturer’s suggested storage temperatures and conditions. The Contractor shall be solely responsible for the protection of the materials stored by himself at the job site. Empty coating cans shall be neatly stacked in an area designated by the Department and removed from the job site on a schedule determined by the Contractor. Department may request a statement from Contractor and/or Manufacturer detailing all materials used on the Project.

3.10 PREPARATION OF MATERIALS

A. Mechanical mixers, capable of thoroughly mixing the pigment and vehicle together, shall mix the paint prior to use where required by manufacturer's instructions; thorough hand mixing will be allowed for small amounts up to one gallon. Pressure pots shall be equipped with mechanical mixers to keep the pigment in suspension, when required by manufacturer's instructions. Otherwise, intermittent hand mixing shall be done to assure that no separation occurs. All mixing shall be done in accordance with SSPC Vol. 1, Chapter 4, "Practical Aspects, Use and Application of Paints" and/or with manufacturer's recommendations.

B. Thinners shall be as recommended by the manufacturer and shall be added or discarded strictly in accordance with the manufacturer's instruction. Partial kits may only be used when components are accurately measured and mixed per the Manufacturer’s latest written recommendations.

3.11 APPLICATION

A. Paint shall be applied only on thoroughly dry surfaces and during periods of favorable weather, unless otherwise allowed by the paint manufacturer. Except as provided below, painting shall not be permitted when the atmospheric temperature is outside the limit of the manufacturer’s latest written recommendations, or when freshly painted

surfaces may be damaged by rain, fog, dust, or condensation, and/or when it can be anticipated that these conditions will prevail during the drying period.

B. No coatings shall be applied unless surface temperature is a minimum of 5°F above dew point; temperature must be maintained during curing.

C. No coating shall be applied unless the relative humidity is below 85%.

D. Suitable enclosures to permit painting during inclement weather may be used if provisions are made to control atmospheric conditions artificially inside the enclosure, within limits suitable for painting throughout the painting operations.

E. Field painting in the immediate vicinity of, or on, energized electrical and rotating equipment, and equipment and/or pipes in service shall not be performed without the approval of the Department.

F. Extreme care shall be exercised in the painting of all operable equipment, such as valves, electric motors, etc., so that the proper functioning of the equipment will not be affected.

G. The Contractor's scaffolding shall be erected, maintained and dismantled without damage to structures, machinery, equipment or pipe. Drop cloths shall be used where required to protect buildings and equipment. All surfaces required to be clear for visual observation shall be cleaned immediately after paint application.

H. For ferrous metals, the prime coat shall be applied immediately following surface preparation and in no case later than the same working day. All paint shall be applied by brushing, paint mitt and roller, conventional spraying, or airless spraying, using equipment approved by the paint manufacturer.

I. Surfaces that will be inaccessible after assembly shall receive either the full specified paint system or three shop coats of the specified primer before assembly.

J. Unless otherwise specified, each full coat within a coating system shall be of a different or alternating color.

K. Finish colors shall be approved by the Department and shall be factory mixed (i.e., there shall be no tinting by the Contractor, unless authorized by the Department).

L. All edges and weld seams in immersion service shall receive a "stripe coat" (applied by brush) of the 2nd coat prior to application of the full 2nd coat.

M. Painting shall be performed by experienced painters in accordance with the recommendations of the paint manufacturer. All paint shall be uniformly applied without sags, runs, spots, or other blemishes. Work which shows carelessness, lack of skill, or is defective in the opinion of the Department, shall be corrected at the expense of the Contractor.

3.12 APPLICATION OF PAINT

A. By Brush and/or Rollers

1. Top quality, properly styled brushes and rollers shall be used. Rollers with a baked phenol core shall be utilized.

2. The brushing or rolling shall be done so that a smooth coat as nearly uniform in thickness as possible is obtained. Brush or roller strokes shall be made to smooth the film without leaving deep or detrimental marks.

3. Surfaces not accessible to brushes or rollers may be painted by spray, by dauber or sheepskins, and paint mitt.

4. It may require two coats to achieve the specified dry film thickness if application is by brush and roller.

B. Air, Airless or Hot Spray

1. The equipment used shall be suitable for the intended purpose, shall be capable of properly atomizing the paint to be applied and shall be equipped with suitable pressure regulators and gauges.

2. Paint shall be applied in a uniform layer, with a 50% overlap pattern. All runs and sags should be brushed out immediately or the paint shall be removed and the surface resprayed.

3. High build coatings should be applied by a cross-hatch method of spray application to ensure proper film thickness of the coating.

4. Areas inaccessible to spray shall be brushed; if also inaccessible to brush, daubs or sheepskins shall be used, as authorized by the manufacturer.

5. Thinners shall be as recommended by the manufacturer and shall be added or discarded strictly in accordance with the manufacturer's instruction.

6. Nozzles, tips, etc., shall be of sizes and designs as recommended by the manufacturer of the paint being sprayed.

7. The first coat on concrete surfaces in immersion service should be sprayed and back rolled.

8. When utilized, Tnemec Series 22 Epoxoline is to be spray applied only.

3.13 PROTECTION AND CLEANUP

A. It shall be the responsibility of the Contractor to protect at all times, in areas where painting is being done, floors, materials of other crafts, equipment, vehicles, fixtures, and

finished surfaces adjacent to paint work. Cover all electric plates, surface hardware, nameplates, gauge glasses, etc., before start of painting work.

B. At the option of the Department during the course of this project, the Contractor will contain all spent abrasives, old paint chips, paint overspray and debris by means suitable to the Department, including, but not limited to, full shrouding of the area.

C. If shrouding is required, the Contractor must provide a complete design of the intended shroud or cover. Care must be taken not to modify or damage the structure during the use of the shroud. If damage should occur, the Contractor is held responsible for all repairs.

D. At completion of the work, remove all paint where spilled, splashed, spattered, sprayed or smeared on all surfaces, including glass, light fixtures, hardware, equipment, painted and unpainted surfaces.

E. After completion of all painting, the Contractor shall remove from job site all painting equipment, surplus materials and debris resulting from this work.

F. The Contractor is responsible for the removal and proper disposal of all hazardous materials from the job site in accordance with Local, State and Federal requirements as outlined by the Environmental Protection Agency.

3.14 TOUCH-UP and TOUCH-UP MATERIALS

A. All areas which require field touch-up after erection, such as welds, burnbacks, and mechanically damaged areas, shall be prepared per the Manufacturer’s latest written recommendations.

B. Strict adherence to manufacturer's complete touch-up recommendations shall be followed. Any questions relative to compatibility of products shall be brought to the Department and Manufacturer's attention. Otherwise, Contractor assumes full responsibility.

C. The Contractor shall provide, at the end of the Project, at least one (1) gallon of each generic topcoat in each color as specified by the Department for future touch-up. Two gallons may by required for (2) component materials.

3.15 FILM THICKNESS

A. Primer: One coat of 6.0 – 8.0 mils.

B. Epoxy Topcoat: Two coats of 16.0 - 20.0 mils each for a total DFT of 32.0 – 40.0 mils.

C. Tnemec Series 73 EnduraShield or approved equal shall be applied to all areas above the waterline to protect the epoxy topcoat from UV radiation.

END OF SECTION

APPENDIX "A"

DEPARTMENT OF ENVIRONMENTAL RESOURCES MANAGEMENT,

DADE-COUNTY NOTICE TO ALL CONTRACTORS

CD 2.07(3) CDWWTP Plant 1 Clarifier Basin No. 3 Structural Rehabilitation

Miami Dade County, Florida
Regulatory and Economic Resources
701 NW 1st Court, Suite 600
Miami, Florida 33136
(305) 372-6681

NOTICE TO ALL CONTRACTORS INVOLVED IN ANY CONSTRUCTION ACTIVITY WHICH REQUIRED DEWATERING WITH ULTIMATE DISCHARGE INTO A CANAL, LAKE, DITCH, OR STORM SEWER WHICH DISCHARGES INTO AN OPEN BODY OF WATER OR BISCAYNE BAY.

Please be aware that if you are involved in any construction activity as above described, you are required to provide all necessary measures in order to maintain turbidity in the receiving body of water within acceptable limits as established by the Florida Building Code. You must present a separate plan to be included with your building plans indicating your propose measures or apply for a permit from the Regulatory and Economic Resources Department before your construction plans will receive final approval, as required by Miami Dade County Code of Ordinance Chapter 24 Section 48.1 (1)(e). For additional information, please contact Ms. Maria Molina, P.E., Chief Water Control Section of the RER Division of Environmental Resources Management.

APPENDIX “B”

STANDARD DETAILS

(Not Used)

CD 2.07(3) CDWWTP Plant 1 Clarifier Basin No. 3 Structural Rehabilitation

APPENDIX "C"

WASD ID SECURITY PROCEDURES NON-WASD EMPLOYEES

(Not Used; Instead Refer to Section 01350A)

CD 2.07(3) CDWWTP Plant 1 Clarifier Basin No. 3 Structural Rehabilitation

APPENDIX “D”

M-DWASD SAFETY UNIT CONSTRUCTION SAFETY AND HEALTH POLICY

CD 2.07(3) CDWWTP Plant 1 Clarifier Basin No. 3 Structural Rehabilitation

Miami-Dade Water and Sewer Department Safety Unit
CONSTRUCTION SAFETY and HEALTH POLICY

The Construction Safety and Health standards contained in this Contract are to aid Contractors in their efforts toward achieving compliance with the Occupational Safety and Health Administration (OSHA) Code of Federal Regulations (CFR) and other regulatory programs in the workplace. The Contract does not contain all OSHA and other regulatory safety and health programs, those indicated are (1) standards or procedures most frequently overlooked and\or (2) procedures as they pertain to hazardous situations.

It is the policy of Miami-Dade County to improve the effectiveness of public service by providing a safe and healthful work place for County and contractual employees, providing for the safety and health of the public, and preserving County resources, through the establishment and implementation of the Miami-Dade Safety and Loss Prevention Program **(Administrative Order No. 7-14)**. A copy of Administrative Order No. 7-14 will be available and provided at the preconstruction meeting.

Miami-Dade County has adopted the Occupational Safety and Health Act. Contractors must comply with standards in 29 CFR 1910 and 1926. 29 CFR 1926, Subpart C, "General Safety and Health Provisions" and other specific sections of these standards include the responsibilities for each Contractor to initiate and maintain safety and health programs, provide for a competent person to conduct frequent and regular inspections, instruct each employee to recognize and avoid unsafe conditions and know what regulations are applicable to the work environment (site). OSHA also uses Special Emphasis Programs (SEPs), Local Emphasis Programs (LEPs), and National Emphasis Programs (NEPs) to find ways to help control accidents, injuries, and illnesses in construction sites where employee and public exposure to unusual physical and health risks exist.

A Contractor's project safety manual must be submitted for review and accepted by the Miami-Dade Water and Sewer Department Safety Unit prior to receiving "Notice to Proceed." The project safety manual must include but not be limited to, all OSHA and all other Federal, State and Local regulatory programs as they pertain to the construction project. The project safety manual must be available and accessible at the construction site.

The Miami-Dade County Water and Sewer Department Safety Unit adheres to and enforces Administrative Order No. 7-14, inclusive of all regulatory programs. It is the responsibility of the Contractor to comply with and enforce all applicable safety regulations. The Contractor shall comply with, but not be limited to, the OSHA Code of Federal Regulations and all other regulatory programs as they pertain to the construction project.

- **Excavation\Trenching (CFR 1926 Subpart P)** any man made cut, cavity, trench, or depression in an earth surface, formed by earth removal. Ensure each employee protection from potential hazards around or within an excavation or trench. Contractor must adhere to the State of Florida **Trench Safety Act (*Title XXXIII, Regulation of Trade, Commerce, Investments and Solicitation, Chapter 553, Building Construction Standards, Part III, (ss 553.60 through 553.64*))**. The Trench Safety Act (TSA) has been incorporated in to a State standard, derived from the OSHA excavation safety standard CFR 1926.650 Subpart P. The TSA states on all contracts for trench excavation in which such excavation will exceed a depth of 5 feet **(ss. 553.63-Trench excavations in excess of 5 feet deep; required information.)**:

1 **The contract bid submitted by the Contractor who will perform such excavation shall include:**
   - **(a) A reference to the trench safety standards that will be in effect during the period of construction of the project.**
   - **(b) Written assurance by the Contractor performing the trench excavation that such Contractor will comply with the applicable trench safety standards.**
   - **(c) A separate item identifying the cost of compliance with the applicable trench safety standards.**

2 **A Contractor performing trench excavation shall:**
   - **(a) As a minimum, comply with the excavation safety standards which are applicable to a project.**
   - **(b) Adhere to any special shoring requirements, if any, of the state or other political subdivisions which may be applicable to such a project.**
   - **(c) If any geotechnical information from the owner, the contractor, or otherwise, the contractor performing trench excavation shall consider this information in the contractor's design of the trench safety system which it will employ on the project. This paragraph shall not require the owner to obtain geotechnical information.**

- Specific excavation requirements **(CFR 1926.651(b)(1))** states that the estimated location of utility installations such as sewer, telephone, fuel, electric, water lines, or any other underground installations that reasonably maybe expected to be encountered during excavation work shall be determined prior to opening an excavation. Contractor shall contact utility companies to establish the location of utility underground installations within 24 hours (unless a longer period is required), or cannot establish the exact location of these installations, the work may proceed, and does so with caution, or detection equipment, or other acceptable means to locate utility installations are used **(CFR 1926.651(b)(2))**. When excavation operations approach the estimated location of underground installations, the exact location of the installations shall be determined by safe and acceptable means. While the excavation is open, underground installations shall be protected, supported, or removed, as necessary, to safeguard workers **(CFR 1926.651(b)(3),(4))**. Each employee shall be protected from cave-ins by an adequate protective system designed in accordance with **paragraph (b) or (c)** of this section. Excavations shall be protected from cave-ins by an adequate protective system except when:
  - Excavations are made entirely in stable rock; or trench less than 5 feet (1.5 meters) in depth and examination of the ground by a competent person provides no indication of a potential cave-in **(CFR 1926.652(a)(1)(i) and (ii))**.
  - Protective system shall have the capacity to resist, without failure, all loads that are intended or could reasonably be expected to be applied or transmitted to the system.

  Employees within the trench shall be protected from materials and equipment which could pose a hazard by falling or rolling into the trench. Materials and equipment shall be placed at least 2 feet from the edge of the trench or by the use of retaining devices that are sufficient to prevent materials or equipment from falling or rolling in excavations or a combination of both if necessary **(CFR 1926.651(j)(2))**.

  A ladder is a safe means of egress which shall be located in trench excavations that are 4 feet or greater in depth so as to require no more than 25 feet of lateral travel for employees **(CFR 1926.651(c)(2))**.

Means of exit within the trench must be free of all obstructions, this would allow the employee immediate use in case of fire or emergency **(CFR 1926.34(c))**.

- **Movement of Motor Traffic (M.O.T.)**…reference the Department of Transportation's Manual on Uniform Traffic Control Devices, Part 6…to provide for reasonably safe and efficient movement of road users through or around temporary traffic control zones (work area) while reasonably protecting workers, responders to traffic incidents, and equipment. This only applies if the Contractor is working in an area where there is movement of traffic. Workers exposed to public vehicular traffic greater than 25 m.p.h. shall be provided with, and shall wear orange warning vest with yellow reflective stripes on front and back **(Class II or III)** or other suitable garments marked with or made of reflectorized or high visibility material **(CFR 1926.651(d))**. Flaggers, signaling by flaggers and the garments worn shall follow the OSHA rules incorporated by reference in the Department of Transportation's Manual.
- **Crane Safety (CFR 1926 Subpart N; 1926.550)**. If a crane is to be used at anytime during this project a crane program must be submitted prior to the beginning of construction. The Crane Safety program is a Miami-Dade Code Enforcement Ordinance. The Crane Ordinance **(Chapter 8E-Cranes and Hoisting Equipment of the Code of Miami-Dade County)** is enforceable by the Miami-Dade Code Enforcement Unit. Accessible areas within the swing radius of the rear of the rotating superstructure of the crane, either permanently or temporarily mounted, must be barricaded in such a manner as to prevent an employee from being struck or crushed by the crane. A copy of the Cranes and Hoisting Equipment Ordinance will be available and provided at the preconstruction meeting.
- **Fall Protection (CFR 1926 Subpart M)** employers are required to assess the workplace to determine if the walking/working surface on which employees are to work have the strength and structural integrity to safely support workers.
- **Electrical Protection (CFR 1926 Subpart K)** addresses electrical safety requirements that are necessary for the practical safeguarding of employees involved in construction work and control of hazardous energy and all electrical hazards.
- **Hazard Communication (CFR 1926 Subpart D; 1926.59)** employers shall develop, implement, and maintain at the workplace a written hazard communication program for their workplaces. Employers must inform their employees of the availability of the program, including the required list(s) of hazardous chemicals, and material safety data sheets required.
- **General Safety and Health Provisions (CFR 1926 Subpart E; 1926.28(a) and 1926.95(a) through (c))** the employer is responsible for requiring the wearing of appropriate personal protection equipment in all operations where there is a an exposure to hazardous conditions or where the need is indicated for using such equipment to reduce the hazard to the employee. Employees working over or near a body water, shall be provided with U. S. Coast Guard approved life jackets or buoyant work vests. **Head Protection (CFR 1926.100)** Head protective equipment (hard hat) shall be worn in areas where there is a possible danger of head injuries from impact, flying or falling objects or electrical shock and burns.
- **Portable Ladders (CFR 1926 Subpart G; 1926.200(h); Subpart X; 1926.1053)** portable ladders with structural defects, such as broken or missing rungs, cleats or steps, broken or split rails, or otherwise corroded, faulty, or defective components must be either immediately marked as defective or tagged with "Do Not Use" or similar language and removed from service until repaired.
- **Occupational Noise Exposure Standard (CFR 1910 Subpart G; 1910.95(l)(1))** the employer shall make available to affected employees or their representatives a copy of

this standard and shall also post a copy in the workplace\site. Hearing Protection **(CFR 1926.52)** feasible hearing controls shall be utilized to protect employees against sound levels that exceed the values in the table.

- **Signs, Signals, and Barricades (CFR 1926 Subpart G; 1926.202; Subpart P 1926.651)** a warning system, such as barricades, hand or mechanical signals, or stop logs, must be used when mobile equipment is operated adjacent to an excavation, or when the equipment is required to approach the edge and the operator does not have a clear and direct view of the excavation. The barricades must conform to the ANSI Manual on Uniform Traffic Control Devices for Streets and Highways.
- **Utility Line Markings ((CFR 1926 Subpart P; 1926. 651(b))** the estimated location of utility installations, such as sewer, telephone, fuel, electric, and water lines, or any other underground installations that reasonably maybe expected to be encountered during excavation work, must be determined prior to opening an excavation.
- **Worksite Analysis**… is a practical analysis of the work environment involves a variety of worksite examinations to identify existing hazards and conditions and operations in which changes might occur to create new hazards. Lack of awareness of a hazard stemming from failure to examine the worksite is a sign that safety and health policies and\or practices are ineffective. An effective active analysis, analyzes the work and worksite to anticipate and prevent harmful occurrences. A job analysis helps an individual to determine if there are hazards in the workplace. This is necessary to help identify and determine what precautions will be necessary to perform the job safely. Verifying whether employees and visitors are wearing their personal protection equipment as it relates to various tasks being performed and as required by OSHA standard **(CFR1926.28 (Subpart C) and 1910.132(a) (Subpart I))**. Reviewing the daily job analysis for the worksite.

The Contractor is advised and encouraged to maintain their Company's policies, procedures, and practices to protect their employees from, and allow them to recognize, job-related safety and health hazards. The purpose of the safety policy and procedures is to promote safety, safeguard the lives and physical welfare of employees and the general public.

APPENDIX "E"

VISUAL INSPECTION REPORT

(Not Included as Part of this Issued for Bid Submittal)

CD 2.07(3) CDWWTP Plant 1 Clarifier Basin No. 3 Structural Rehabilitation

APPENDIX “F”

DESIGN PLANS

(Included Under Separate Cover)

CD 2.07(3) CDWWTP Plant 1 Clarifier Basin No. 3 Structural Rehabilitation

APPENDIX “G”

WASD PREQUALIFIED PROTECTIVE COATING SERVICES VENDORS

CD 2.07(3) CDWWTP Plant 1 Clarifier Basin No. 3 Structural Rehabilitation

ROADMAP
CONTRACT NO. RTQ-00103
PROTECTIVE COATING SERVICES - PREQUALIFICATION

I. The purpose of this contract is to provide a pool of pre-qualified vendors to provide protective coating services on an as needed basis.

Services to include but are not limited to structural repairs, concrete protection, and rehabilitation of water and wastewater lines and tanks utilizing modified epoxy protective coatings and any related services as required by the County.

Approved Manufactures

- Epoxytec International Inc.
- Tnemec Inc.
- The Sherwin Williams Company
- WOL-COAT Protective Coatings and Repair Products
- Belzona International Ltd
- Somay Products Inc.
- International Paint (Ceilcote, Enviroline, Devoe, and Polibrid)
- Raven Lining Systems (Raven 405, Raven 410, AquataFlex)

II. Quotation Procedures:

The County will solicit spot market quotation from qualified bidders on an as-needed basis.

All pre-qualified bidders will be solicited for price and availability of projects as needed. All individual Request for Quotes should be reviewed for applicable measures prior to advertising. All quotations issued must be registered with SBD at the following link: https://intra3.miamidade.gov/ISD/SBD/Login.aspx This link officially places your project on the Cone of Silence Report. Additionally the Office of the Commission Auditor (OCA) shall be copied at oca@miamidade.gov when quote is issued.

The Request for Quotation (RFQ) should include, at a minimum, language advising prequalified bidders that their bids should take account of all labor, supervision, material and equipment, permits, and any other items or incidentals. In addition, the RFQ should include any needed drawings, plans and will notify vendors, if applicable, of the following: pre-quotation conference or site visit, bid bond, performance security, liquidated damages, if the work is to be performed at night or on weekends, work completion deadline, method of award, the type of payment, time frames, the date for return of responses to the County of the RFQ, applicable Responsible Wages, Community Workforce Program (CWP), Logging/Videotaping of Well requirements, as well as any additional requirements.

III. Award Procedures:

All bidder(s) shall be notified of the award. The award date must be recorded so the cone of silence can officially be lifted. This step is accomplished by utilizing the same link used to originally post the quotations. The three (3) day protest period is applicable to all quotations.

IV. Applicable Ordinances for Quotations:

1) **Local Certified Service – Disabled Veteran** should be applied in accordance with Section 2-8.5.1 of the Miami-Dade County Code, a Local Certified Service Disabled Veteran Business Enterprise (VBE) shall receive a bid preference of 5% of the price bid (for the purpose of evaluation ONLY). A VBE who is also an SBE shall not receive the veteran's preference and shall be limited to any applicable SBE preferences. At the time of bid submission, the vendor must affirm in writing its compliance with the certification requirements of Section 295.187 of the Florida Status and submit this affirmation and a copy of the actual certification along with the bid.

2) **Local Preference** http://library.municode.com/index.aspx?clientId=10620&stateId=9&stateName=Florida:
(Section 2-8.5; also applicable to Broward County vendors)

Additionally, a Locally-Headquartered Business shall mean a Local Business as defined above which has a "principal place of business" in Miami-Dade County. "Principal place of business" means the *nerve center or the center of overall*

direction, control, and coordination of activities of the bidder. If the bidder has only one business location, such business location shall be its principal place of business.

3) **Cone of Silence** http://library.municode.com/index.aspx?clientId=10620&stateId=9&stateName=Florida; (Section 2-11.1)

4) **UAP/Inspector General Fees** http://library.municode.com/index.aspx?clientId=10620&stateId=9&stateName=Florida; (Section 2-8.10)

5) CWP (Re: ITB Paragraph 2.2.2)

   If the time for completion of an RFQ issued under this contract is greater than 30 days, it is subject to a CWP goal. As such, each RFQ greater than 30 days will be required to be presented to SBD for the application of a CWP goal.

6) Responsible Wages (Re: ITB Paragraph 2.24.3)

   Miami-Dade County Code Section 2.11.16 will apply to any RFQ awarded pursuant to this Contract that exceeds $100,000. The Contract User shall include a Responsible Wages and Benefits Schedule: Heavy Construction provision in any RFQ estimated to exceed $100,000

V. How to Apply Bid and Local Preference to Quotes, if applicable:

1) Bid preferences shall be given to bidders that are identified as certified SBE/Micro, ***if applicable***. The bid preference shall be calculated and subtracted from the total quote price or item for evaluation purposes only. The bid preference is used only to calculate an amount to be used in evaluating the quote and does not affect the final awarded price.

2) Whenever a quote contains both, Bid Preference (SBE/Micro) and Local Preference, departments must apply the bid preference first. Follow the Administrative Guidelines stated in the solicitation/contract document with regard to the applicable measure. The preference should be applied as listed in the table below based on the estimated value of the project and whether or not a set-aside or preference measure is applicable:

	SBE-MICRO Tier 1	**SBE-MICRO Tier 2**	**SBE-MICRO Tier 3**
Set-Asides Up to $100K (All SBE Goods and Services firms are eligible for Set-asides)	Bid Preference 10%	Bid Preference 5%	Bid Preference 0%
Set-Asides Over $100K	$100K-$750K	$750K to $2 Million	$2M to $5 Million
Bid Preference up to $100K (when not a set-aside)	Bid Preference 10%	Bid Preference 10%	Bid Preference 5%
Bid Preference over $100K to $1 Million	All Tiers 10%		
Bid Preference Over $1 Million	All Tiers 5%		

VI. Important Reminders

- Prior to award, verify that vendor certifications and/or licenses continue to be valid
- Obtain a signed Collusion Affidavit (for purchases over $250K) from the recommended vendor
- Obtain a signed Affirmation of Vendor Affidavits from the recommended vendor
- Send notice to all participants of the quote results, copy the Clerk of the Board (clerkbcc@miamidade.gov), and include language advising the vendors that the Cone of Silence is lifted. [Sample language: *In accordance with the reference solicitation, and Section 2-8.4 of the Code of Miami-Dade County, you are hereby notified that the (Dept. name) recommends award of this quote to: (Company name). Provision of this notice also serves to confirm the lifting of the Cone of Silence from this procurement action as dictated by Section 2-11.1(t) of the County Code.*]
- If the award value is over $25K, allow a three (3) business day protest period, beginning the day after the award recommendation is posted with the Clerk, prior to completing award.

VII. Pre-qualified Vendors:

Vendor ID	Vendor Name	Certifications	Address	Contact
651039792 -01	Construction Affairs, Inc.	ECAP Underground Specialist Epoxytec: All applications. Somay Products	14041 SW 54th STREET MIRAMAR, FL. 33027	John F. Kennedy PH: 786 355-5688 FX: 305-829-3589 JFKENN2002@AOL.COM
753163466-01	Poole & Kent Company of Florida	ECAP 360 Epoxytec: All applications. Tnemec Products	1781 N.W. NORTH RIVER DR. MIAMI, FL. 33125	Brian MacClugage PH: 305 325-1930 FX: 305 324-0522 BRIANM@PKFLORIDA.COM
592278618-01	Southland Painting Corp.	ECAP 360 Epoxytec: All applications. Tnemec Products	2635 NW 4th STREET FORT LAUDERDALE, FL. 33319	JOZEF KAMIEL VERSHELST PH: 954 748-2770 FX: 954 748-2901 JEFKMV45@MSN.COM
650404168-01	Cypress Construction & Coating Inc	ECAP 360 Epoxytec: All applications Tnemec Products WOL-COAT products Belzona products Somay products Sherwin William Products	3611 Lee Blvd Leigh Acres, FL 33971	Jason Cox PH: 239-822-1687 FX: 239-303-3252 Jason@cypresscc.net
743030989-01	Service Painting of Florida	ECAP 360 Epoxytec All applications Tnemec Products	12140 Metro Parkway, Suite K Fort Myers, FL 33966	Brad Ervans PH: 239-939-7622 PH: 239-939-1543 bradervans@servicepainting.net
462470436-01	Atlas Polymers Inc.	Atlas Polymers All applications	2930 NW 108 Ave. Miami, FL 33172	Adolfo Rosendo PH: 786-312-1231 FX: 786-217-1244 info@atlas-polymers.com
232593118-01	Enecon Corporation	Enecon All Applications	5010 SW 151st Terrace Miramar, FL 33027	Elizabeth Kessler PH: 305-340-7731 FX: 516 349-5522 elizabethkessler@enecon.com
161342713-01	Amherst Maintenance Inc.	ECAP 360 Epoxytec All applications Tnemec Products Sherwin William Products	920 Harbor Lake Court Safety Harbor, FL 34695	Nicholas M Boubaris PH: 727-781-6500 FX: 727-726-8729 amherstmaintenance@verizon.net

III. Event Log:

	Date	Description
1	6/1/15	Construction Affairs, Inc. was approved, as to insurance requirements, by Risk Management.
2	6/25/15	Edited Roadmap to include vendors' certifications information
3	8/3/15	Edited Roadmap to remove limitations on Construction Affairs
4	10/20/15	Edited Roadmap to include Cypress Construction & Coating Inc as a vendor on the BPO
5	2/9/16	Edited Roadmap to include Florida Service Painting Inc. as a vendor on the BPO.
6	4/19/16	Edited Roadmap to include Atlas Polymers Inc. as a vendor to the BPO.
7	8/11/16	Edited Roadmap to include Enecon Corporation as a vendor to the BPO.
8	03/14/17	International Paint has been added to the manufacture list: Ceilcote, Enviroline, Devoe, and Polibrid.
9	03/23/17	Amherst Maintenance, Inc. was approved, as to insurance requirements, by Risk Management and added to BPO.
10	04/10/17	Raven Lining Systems has been added to the manufacture list: Raven 405, Raven 410, AquataFlex

APPENDIX “H”

RECORD DRAWINGS – EPA PROJECT NO. C 120429130, CONTRACT NO. S-285, FINAL SETTLING TANKS AND FACILITIES

CD 2.07(3) CDWWTP Plant 1 Clarifier Basin No. 3 Structural Rehabilitation

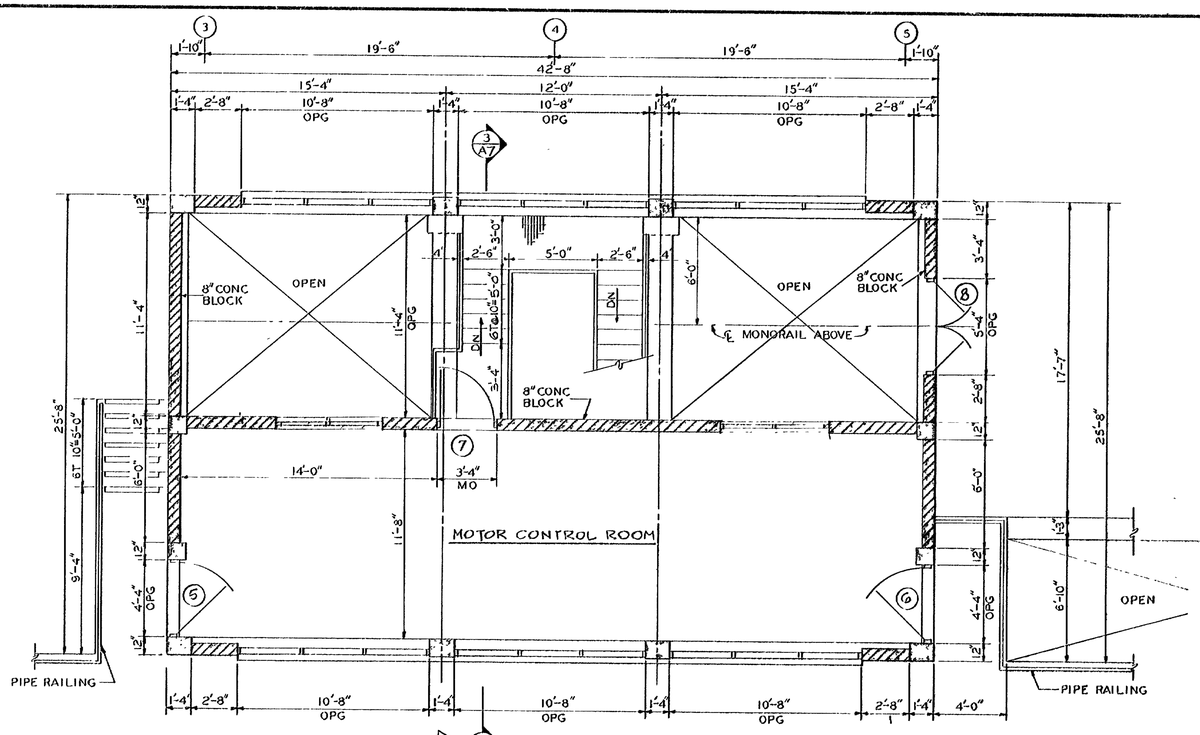

FLOOR PLAN
1/4" = 1'-0"

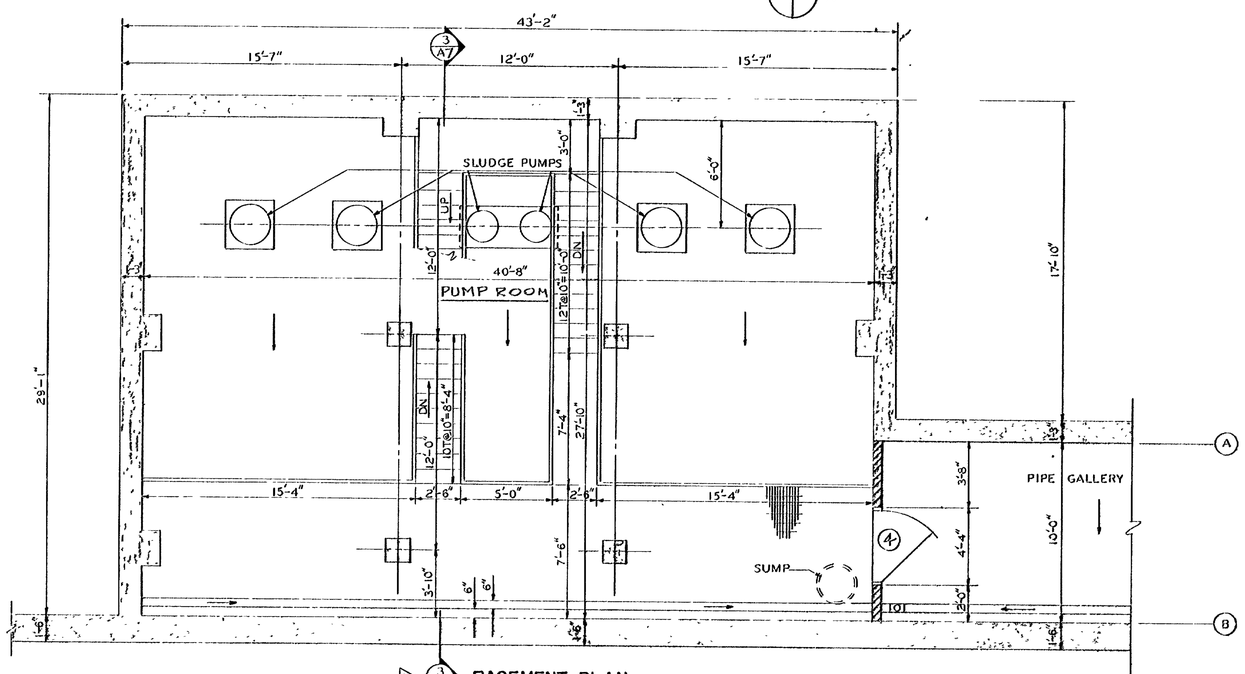

BASEMENT PLAN
1/4" = 1'-0"

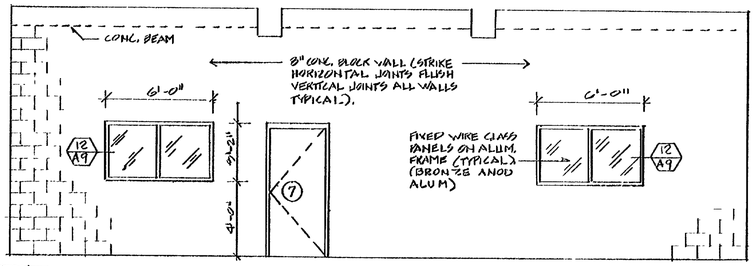

INTERIOR ELEVATION
1/4" = 1'-0"

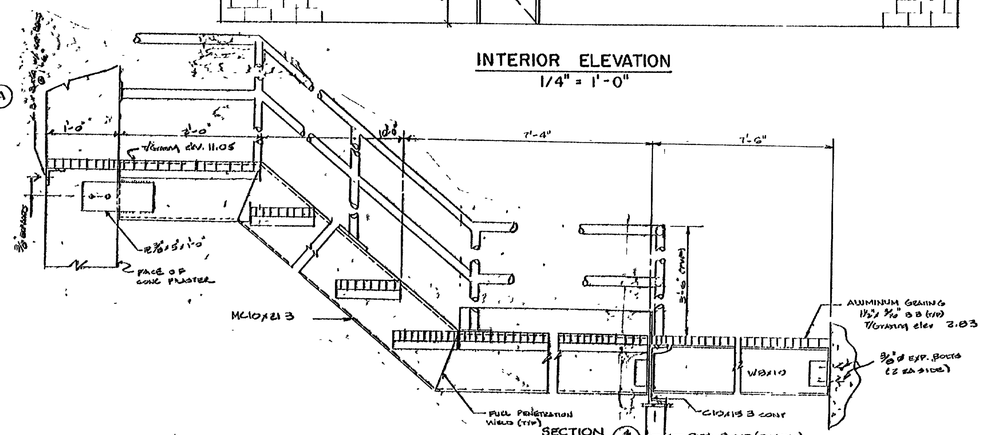

SECTION
1" = 1'-0"

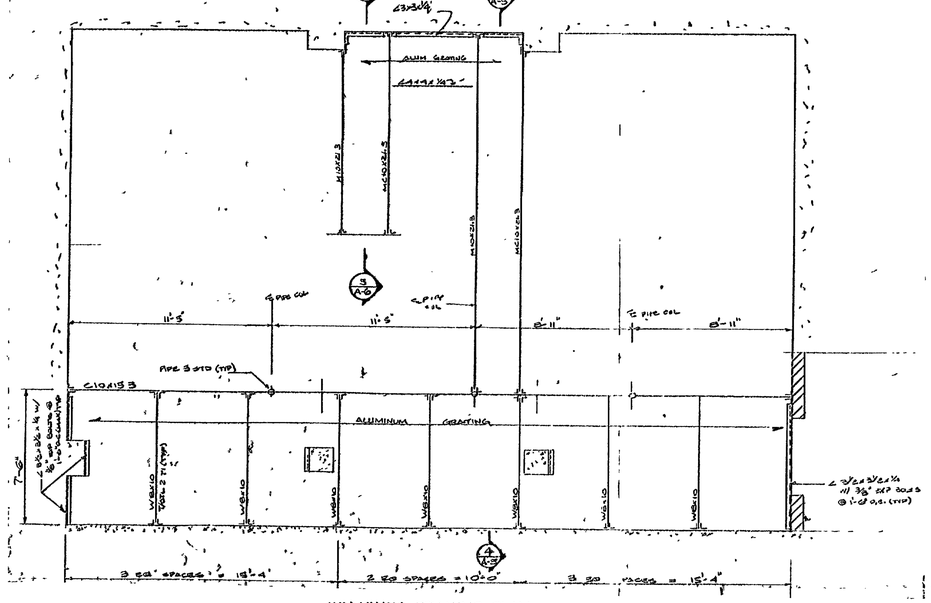

WALKWAY FRAMING PLAN
1/4" = 1'-0"

NO	DATE	ISSUED FOR	BY
	DEC. 21, 1984	ADDENDUM NO. 2	

DESIGNED DAC / MH
DRAWN WMM / GG
CHECKED WEB / DM
APPROVED WWR

PE

POST, BUCKLEY, SCHUH & JERNIGAN INC
CONSULTING ENGINEERS & PLANNERS
HAZEN AND SAWYER, P.C.
CONSULTING ENGINEERS
MIAMI

079-001 8940

MIAMI-DADE WATER AND SEWER AUTHORITY

UPGRADING OF EXISTING CENTRAL DISTRICT WASTEWATER TREATMENT PLANT
VIRGINIA KEY, DADE COUNTY, FLORIDA

ARCHITECTURAL
FINAL SETTLING TANKS
SLUDGE PUMP STATION NO
4 PLANS AND ELEVATION

CONTRACT NUMBER(S) S-285
EPA C120429130
DATE MARCH 15, 1984

DWG A-5
SHEET 52 OF 74
REF NO S-7802-A

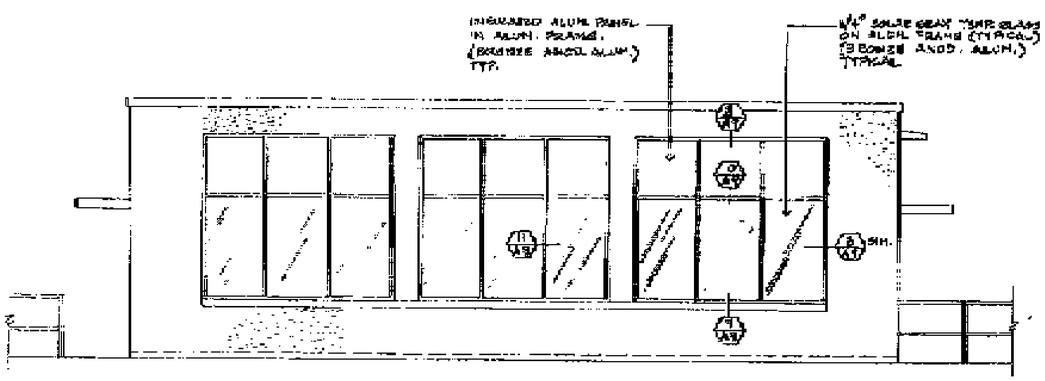

EAST ELEVATION
1/4" = 1'-0"

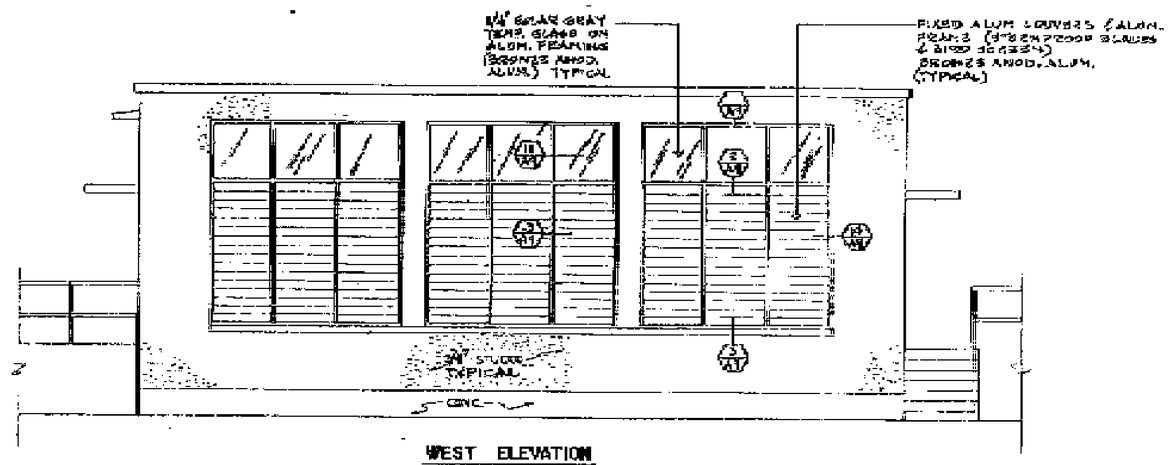

WEST ELEVATION
1/4" = 1'-0"

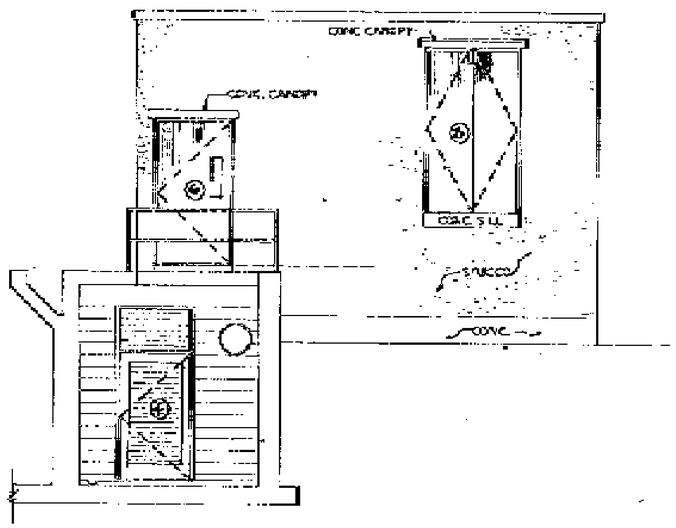

NORTH ELEVATION
1/4" = 1'-0"

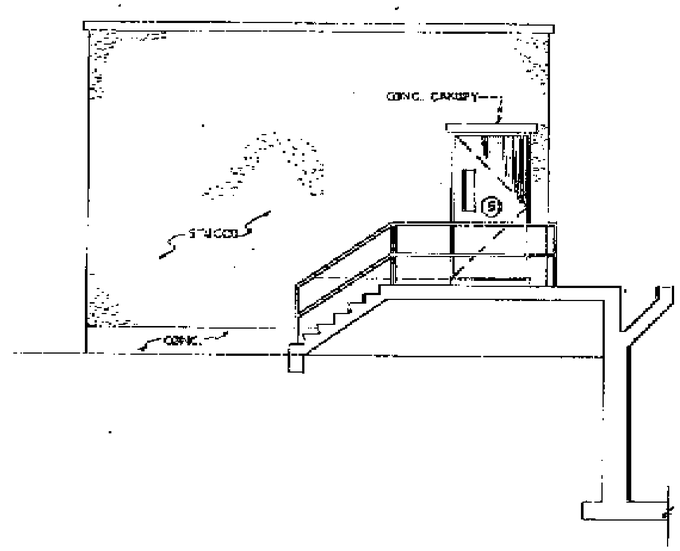

SOUTH ELEVATION
1/4" = 1'-0"

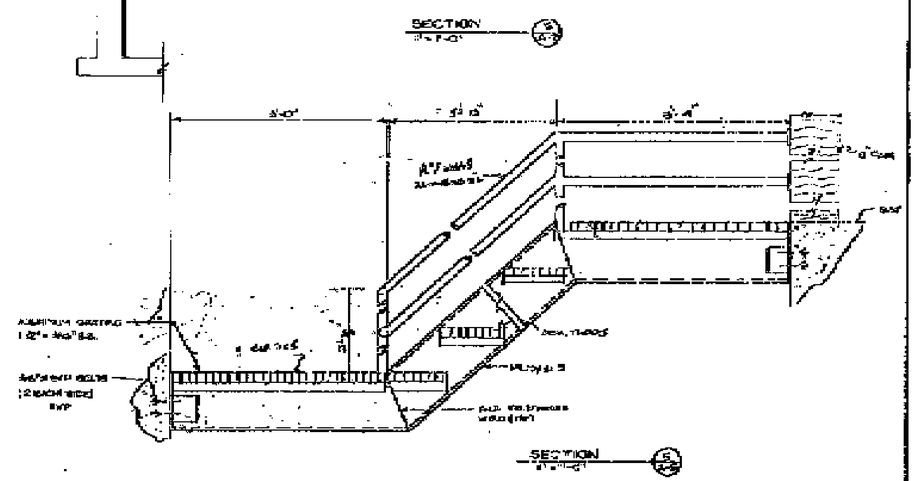

DESIGNED DAC / MB	POST, BUCKLEY, SCHUH & JERNIGAN INC. CONSULTING ENGINEERS & PLANNERS	MIAMI-DADE WATER AND SEWER AUTHORITY	ARCHITECTURAL FINAL SETTLING TANKS, SLUDGE PUMP STATIONS NO. 4 ELEVATIONS
DRAWN MBM / BM	HAZEN AND SAWYER, P.C. CONSULTING ENGINEERS	UPGRADING OF EXISTING CENTRAL DISTRICT WASTEWATER TREATMENT PLANT VIRGINIA KEY, DADE COUNTY, FLORIDA	CONTRACT NUMBER S-285
CHECKED MBM / BM			DWG. C20423136
APPROVED GBR			DATE MARCH 15, 1984
			SHEET A-6
			SHEET 53 of 74
			REF. NO. S-7808-A

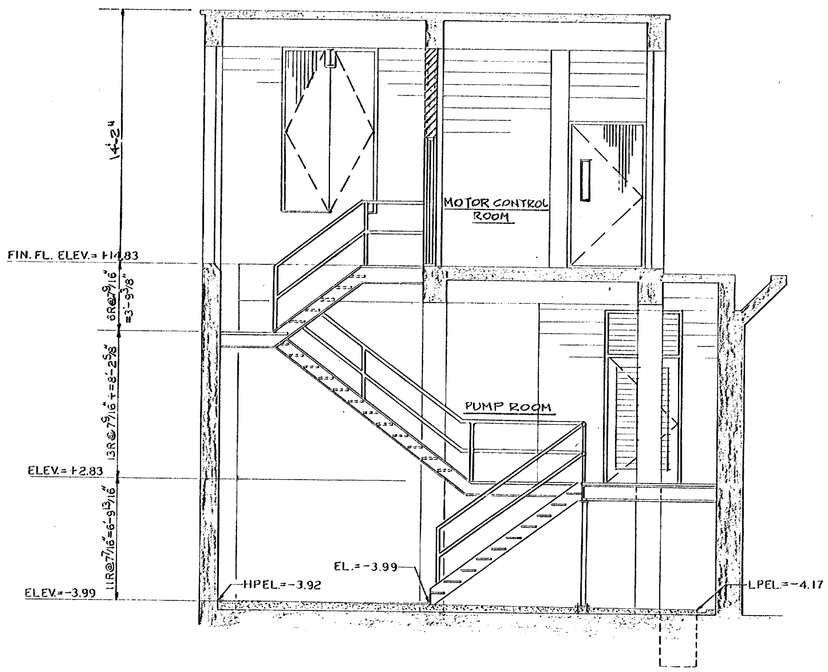

SECTION (3/A6)
1/4" = 1'-0"

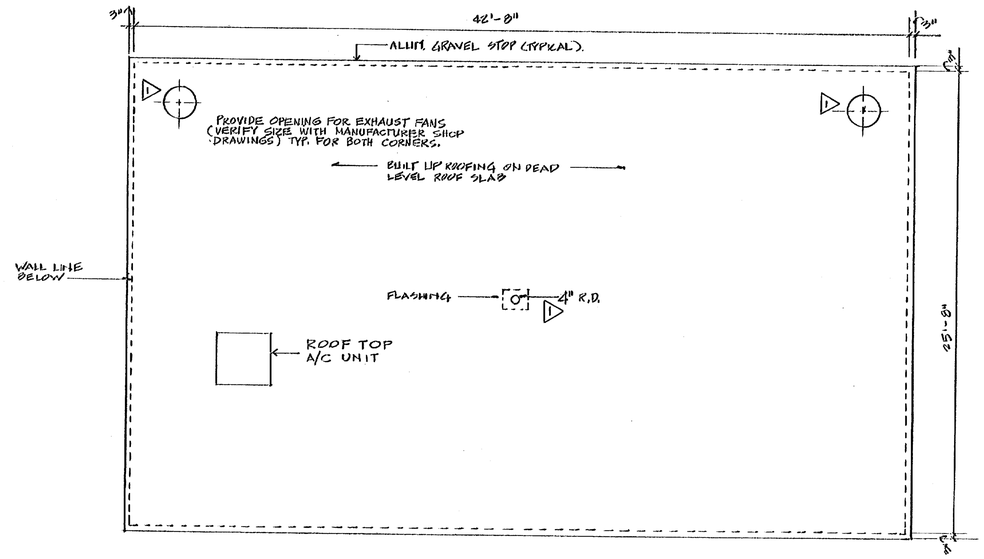

ROOF PLAN
1/4" = 1'-0"

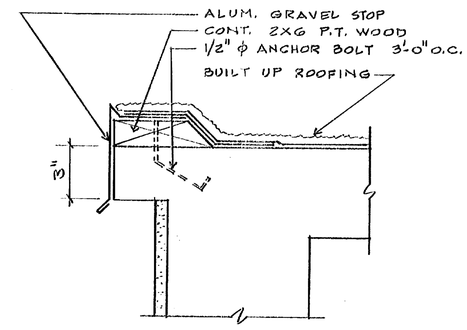

TYPICAL ROOF EAVE DETAIL
3" = 1'-0"

NO.	DATE	ISSUED FOR	BY
1	DEC. 21, 1984	ADDENDUM NO. 2	

DESIGNED DAC / MH
DRAWN WMM / GG
CHECKED WEB / DM
APPROVED WWR

P.E.

POST, BUCKLEY, SCHUH & JERNIGAN INC.
CONSULTING ENGINEERS & PLANNERS
HAZEN AND SAWYER, P.C.
CONSULTING ENGINEERS
MIAMI 078-001 8940

A JOINT VENTURE

MIAMI-DADE WATER AND SEWER AUTHORITY

UPGRADING OF EXISTING CENTRAL DISTRICT WASTEWATER TREATMENT PLANT
VIRGINIA KEY, DADE COUNTY, FLORIDA

ARCHITECTURAL
FINAL SETTLING TANKS
SLUDGE PUMP STATION NO. 4 SECTIONS

CONTRACT NUMBER(S) S-285
EPA C120429130
DATE MARCH 15, 1984

DWG. A8 A-7
SHEET 54 OF 74
REF. NO. S-7804-A

NOTE:
EXISTING PUMPING STATION NO. 2 SHOWN
EXISTING PUMPING STATION NO. 1 OPPOSITE HAND

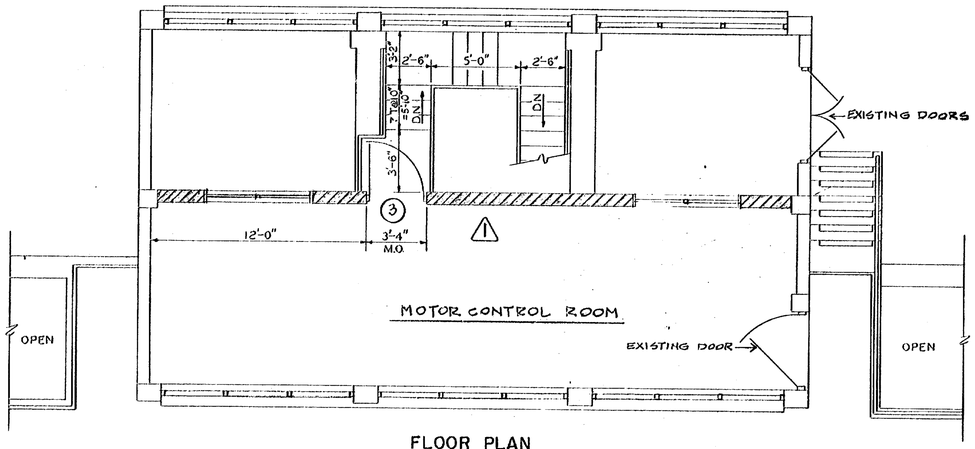

FLOOR PLAN
1/4" = 1'-0"

N

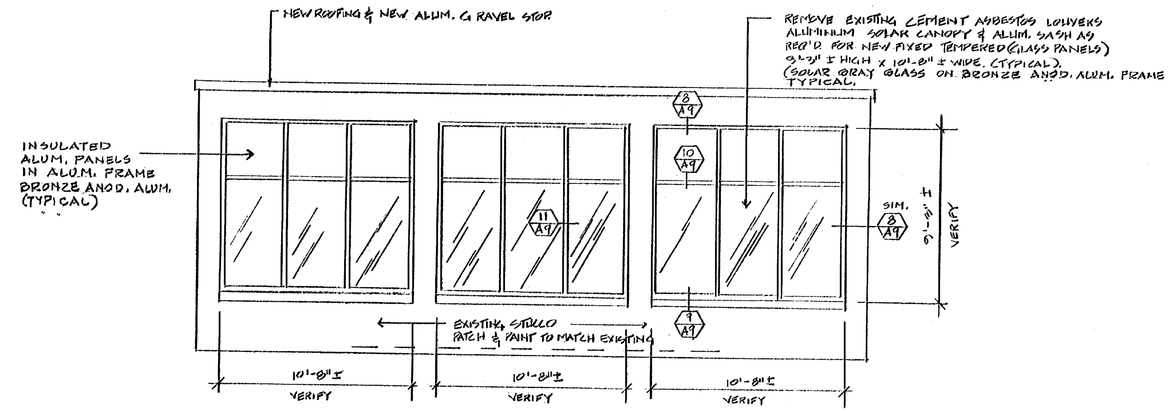

EXTERIOR ELEVATION (EAST)
1/4" = 1'-0"

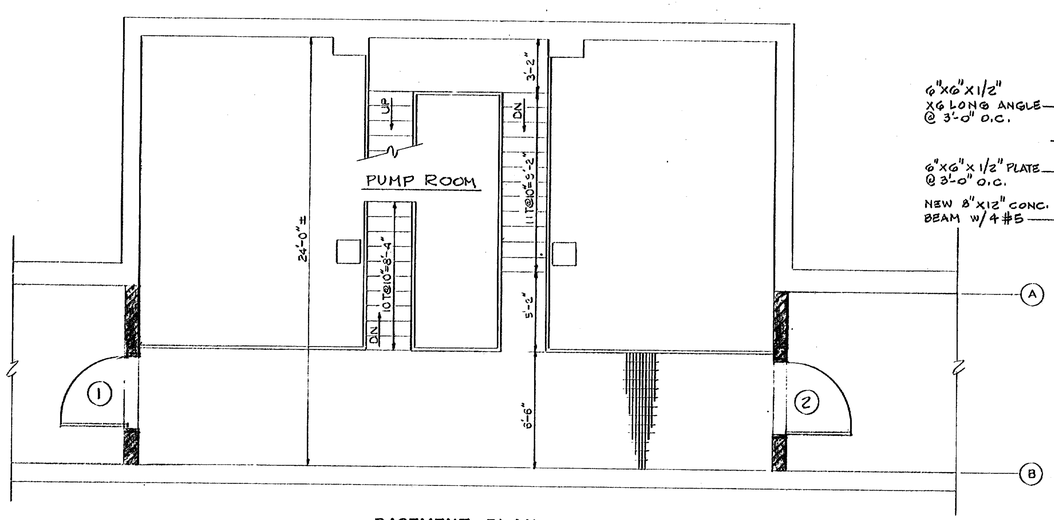

BASEMENT PLAN
1/4" = 1'-0"

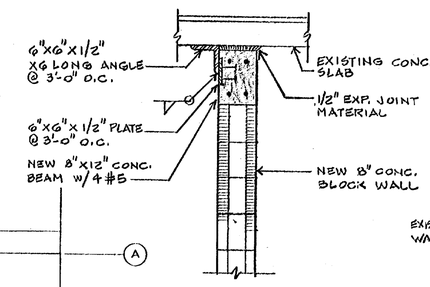

SECTION 1/A8
3/4" = 1'-0"

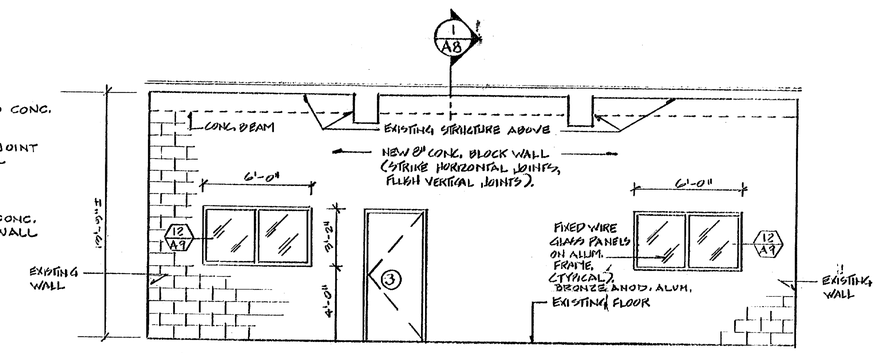

INTERIOR ELEVATION 1
1/4" = 1'-0"

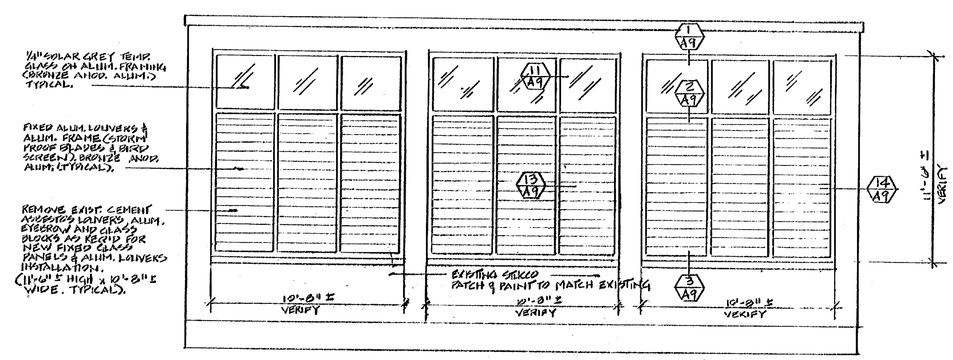

EXTERIOR ELEVATION (WEST)
1/4" = 1'-0"

NO.	DATE	ISSUED FOR	BY

DESIGNED DAC / MH
DRAWN WMM / G G
CHECKED WEB / D M
APPROVED W W R

P.E.

POST, BUCKLEY, SCHUH & JERNIGAN INC.
CONSULTING ENGINEERS & PLANNERS
HAZEN AND SAWYER, P.C.
CONSULTING ENGINEERS
MIAMI
A JOINT VENTURE
078-001 8940

MIAMI-DADE WATER AND SEWER AUTHORITY

UPGRADING OF EXISTING CENTRAL DISTRICT WASTEWATER TREATMENT PLANT
VIRGINIA KEY, DADE COUNTY, FLORIDA

ARCHITECTURAL
FINAL SETTLING TANKS
SLUDGE PUMP STATIONS NO. 1
AND 2 PLAN AND ELEVATIONS

CONTRACT NUMBER(S) S-285
EPA C120429130
DATE MARCH 15 1984

DWG. A-8
SHEET 55 OF 74
REF. NO. S-7805-A

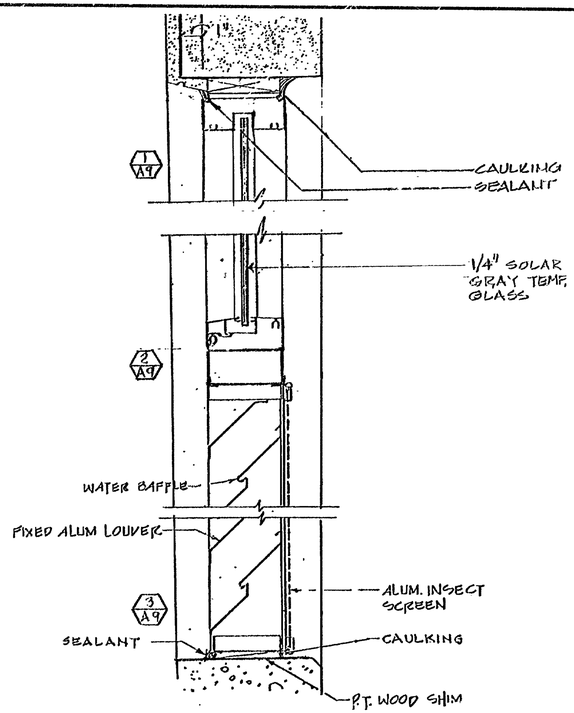

HEAD AND SILL DETAIL
3"=1'-0"

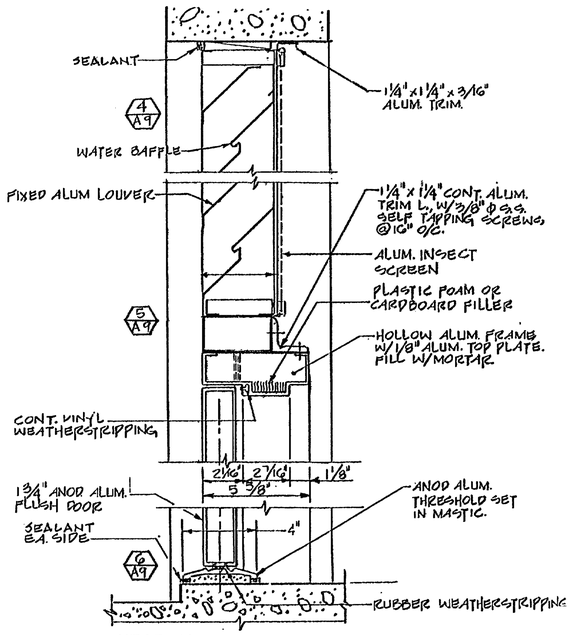

HEAD AND THRESHOLD DETAIL
3"=1'-0"

ROOM FINISH SCHEDULE

LOCATION	FLOOR	BASE	WALLS NORTH	WALLS EAST	WALLS SOUTH	WALLS WEST	CLG.	CLG. HT.	REMARKS
BLDG. 4									
MOTOR CONTROL RM	CONC.	—	EXP. BLOCK	EXP. BLOCK	EXP. BLOCK	EXP. BLOCK	—	—	
PUMP ROOM	CONC.	—	EXP. CONC.	EXP. CONC.	EXP. CONC.	EXP. CONC.	—	—	

DOOR SCHEDULE

NO.	LOCATION	DOOR SIZE	MATERIAL	TYPE	JAMBS	HEAD	THRSHLD.	REMARKS
4	PUMP STA. NO. 4	4'-0" x 7'-0" x 1 3/4"	ALUM. "	D	7 A9	8 A9	6 A9	
5	PUMP STA. NO. 4	4'-0" x 8'-0" x 1 3/4"	ALUM. "	C	7 A9	7 A9 SIM.	6 A9	
6	PUMP STA. NO. 4	4'-0" x 8'-0" x 1 3/4"	ALUM. "	C	7 A9	7 A9 SIM.	6 A9	
7	PUMP STA. NO. 4	3'-0" x 7'-0" x 1 3/4"	ALUM. "	B	7 A9	7 A9 SIM.	6 A9	
8	PUMP STA. NO. 4	2-2'-6" x 9'-0" x 1 3/4" *	ALUM. "	E	7 A9	7 A9 SIM.	VERIFY	*VERIFY HT.

NOTE: ALL WINDOW, LOUVERS AND FRAMES TO BE BRONZE ANOD. ALUM.

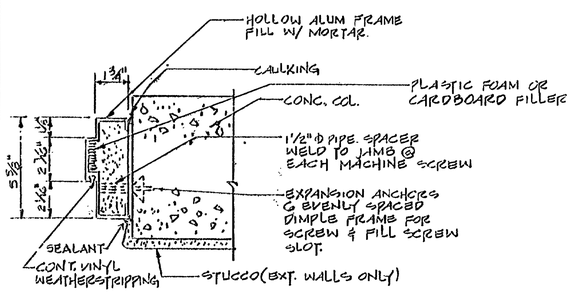

7 A9 JAMB DETAIL (HEAD SIMILAR)
3"=1'-0"

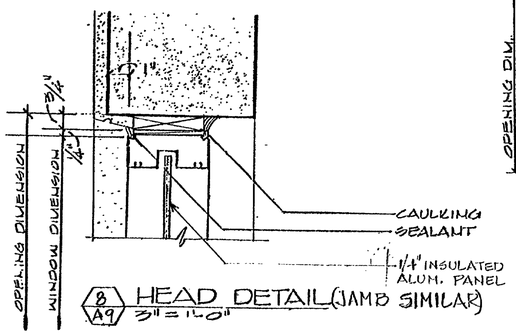

8 A9 HEAD DETAIL (JAMB SIMILAR)
3"=1'-0"

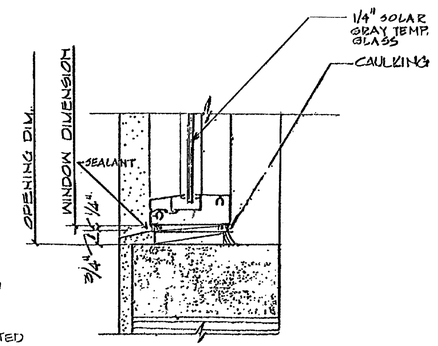

9 A9 SILL DETAIL
3"=1'-0"

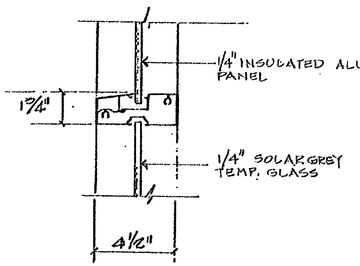

10 A9 HORIZONTAL MULLION
3"=1'-0"

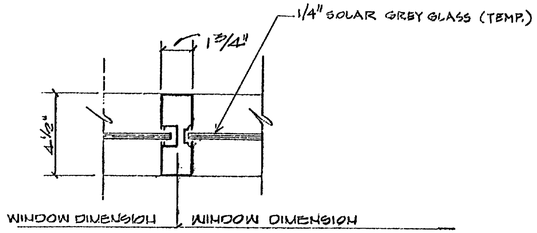

11 A9 VERTICAL MULLION DETAIL
3"=1'-0"

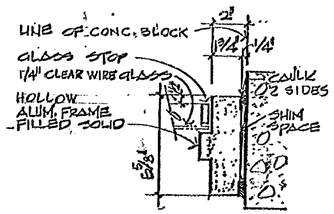

12 A9 JAMB (HEAD SIMILAR)
3"=1'-0"

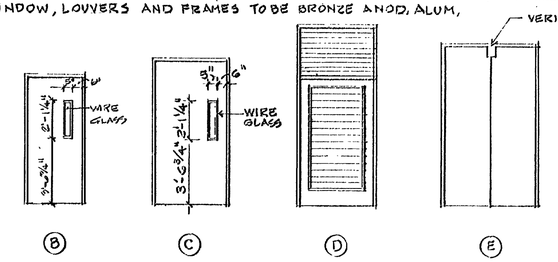

DOOR TYPES

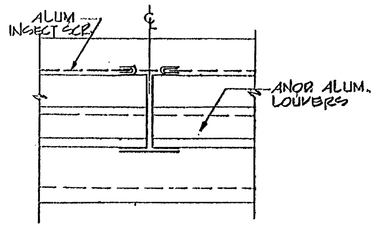

DETAIL 13 A9
3"=1'-0"

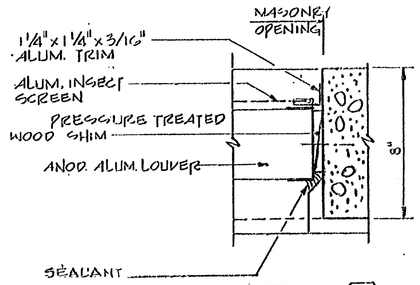

DETAIL 14 A9
3"=1'-0"

NO.	DATE	ISSUED FOR	BY
1	DEC. 21, 1984	ADDENDUM NO. 2	

DESIGNED DAC / MH
DRAWN WMM / GG
CHECKED WEB / OM
APPROVED WWR

P.E.

POST, BUCKLEY, SCHUH & JERNIGAN INC.
CONSULTING ENGINEERS & PLANNERS
HAZEN AND SAWYER, P.C.
CONSULTING ENGINEERS
MIAMI
A JOINT VENTURE
078-001 8940

MIAMI-DADE WATER AND SEWER AUTHORITY

UPGRADING OF EXISTING CENTRAL DISTRICT WASTEWATER TREATMENT PLANT
VIRGINIA KEY, DADE COUNTY, FLORIDA

ARCHITECTURAL
FINAL SETTLING TANKS
SLUDGE PUMP SCHEDULES AND DETAILS

CONTRACT NUMBER(S) S-285-C
EPA C120429130
DATE MARCH 15, 1984

DWG. A-9
SHEET 56 OF 74
REF. NO. S-7806-A

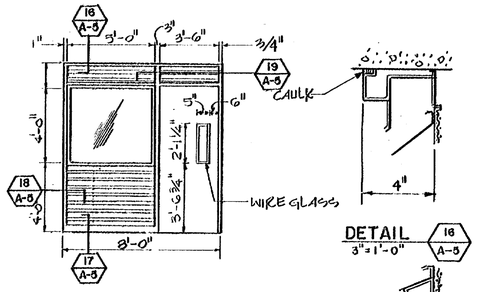

DOOR TYPE "C"
1/4"=1'-0"

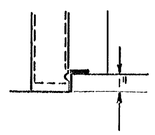

THRESHOLD DETAIL
3"=1'-0"

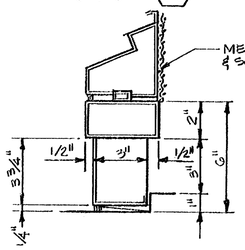

DETAIL 17 A-5
3"=1'-0"

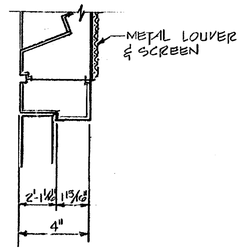

DOOR HEAD DETAIL
3"=1'-0"

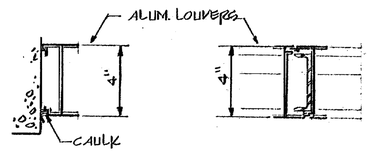

DETAIL 18 A-5
3"=1'-0"

DETAIL 19 A-5
3"=1'-0"

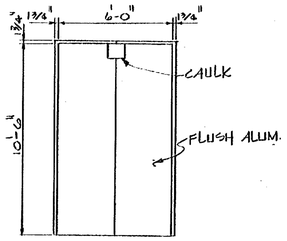

DOOR TYPE "B"
1/4"=1'-0"

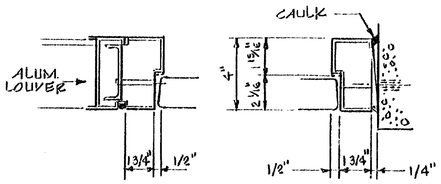

DOOR JAMB DETAIL
3"=1'-0"

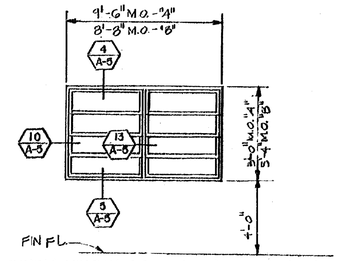

AWNING WINDOW BRONZE COLOR ANODIZED ALUM. 0.125 TH. WIDE VENTS, 1/4" CLEAR PLATE WIRE GLASS, GEAR OPERATED W/ 18 x 14 MESH ALUM. INSECT SCREEN.

WINDOW TYPE "A","B"
1/4"=1'-0"

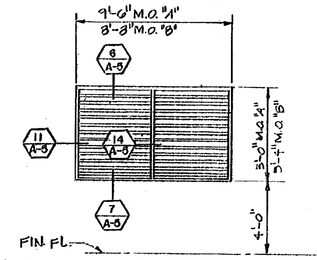

FIXED ALUM. LOUVERS, BRONZE COLOR ANODIZED ALUM. FINISH W/18x18 MESH ALUM. INSECT SCREEN ATTACHED TO INTERIOR FACE. SCREENS TO MATCH LOUVER FRAMES.

LOUVER TYPE "A","B"
1/4"=1'-0"

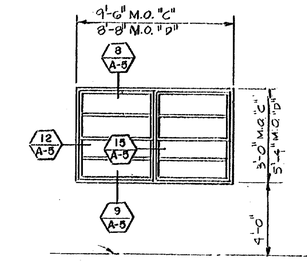

SINGLE HUNG WINDOW BRONZE COLOR ANOD. ALUM. FINISH, 1/4" CLEAR PLATE WIRE GLASS, INTEGRALLY HAND LIFT FOR MANUAL OPERATION, WHITE BRONZE CAM LOCKS & 18 x 14 MESH ALUM. INSECT SCREEN.

WINDOW TYPE "C","D"
1/4"=1'-0"

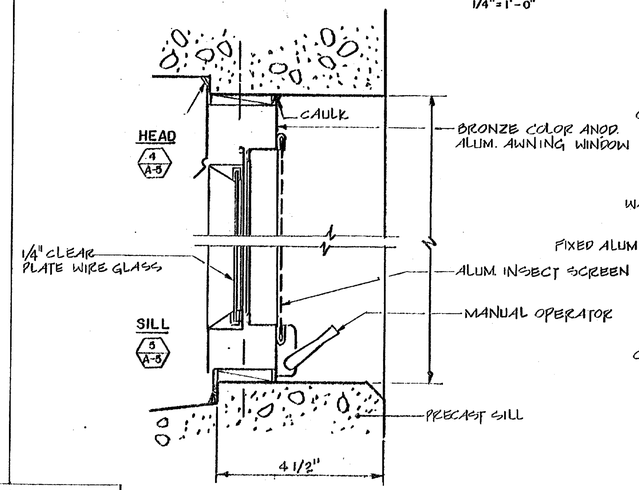

DETAILS 4 A-5 5 A-5
HALF SIZE

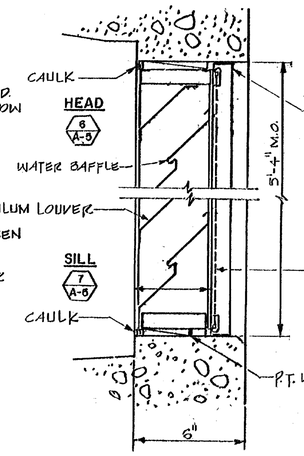

DETAILS 6 A-5 7 A-5
3"=1'-0"

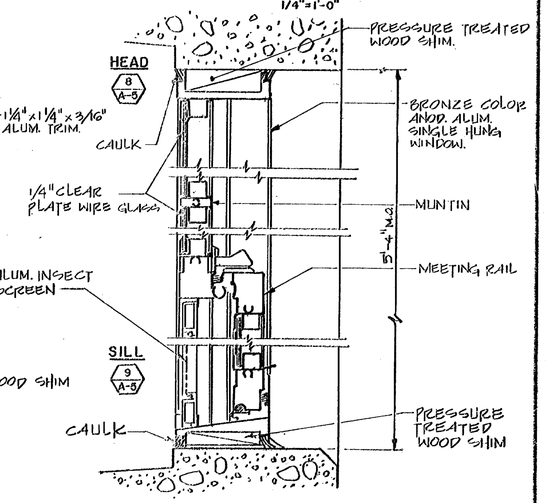

DETAILS 8 A-5 9 A-5
HALF SIZE

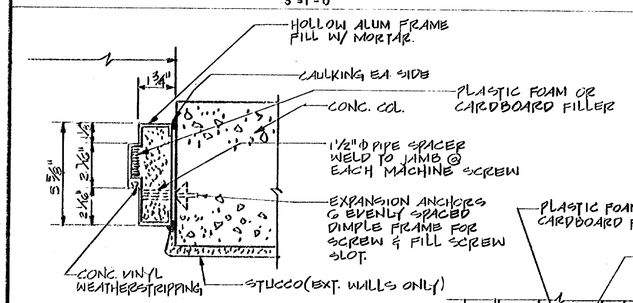

JAMB DETAIL
3"=1'-0"

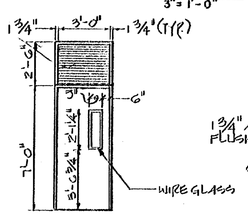

DOOR-TYPE "A"
1/4"=1'-0"

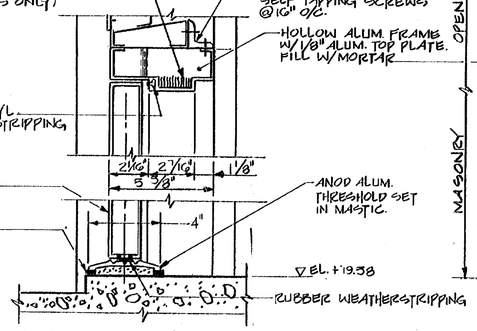

HEAD AND THRESHOLD DETAIL
3"=1'-0"

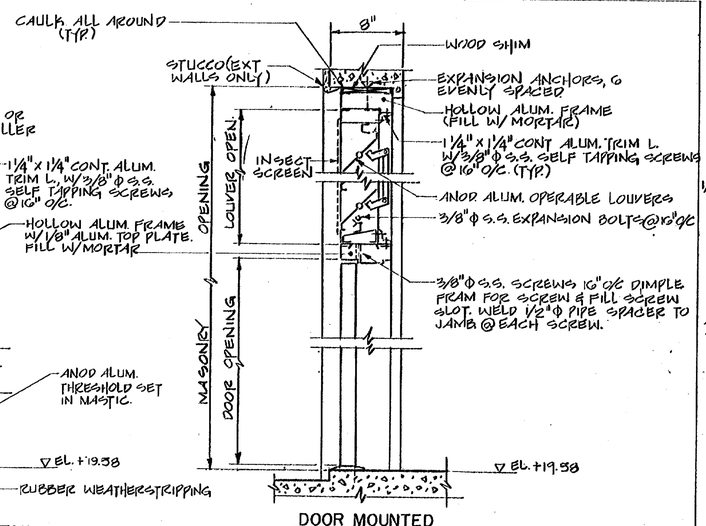

DOOR MOUNTED OPERABLE LOUVER
1 1/2"=1'-0"

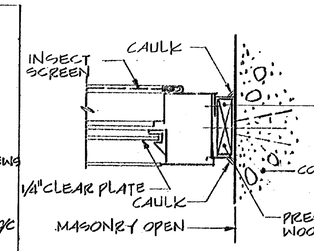

DETAIL 10 A-5
HALF SIZE

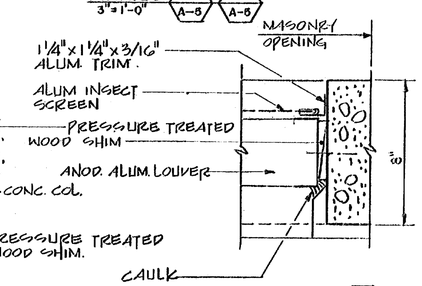

DETAIL 11 A-5
3"=1'-0"

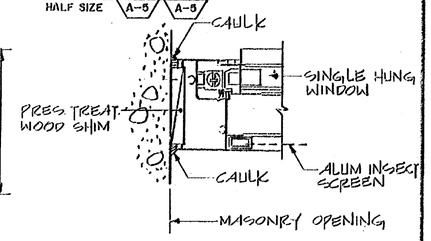

DETAIL 12 A-5
HALF SIZE

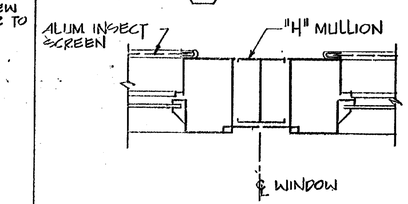

DETAIL 13 A-5
HALF SIZE

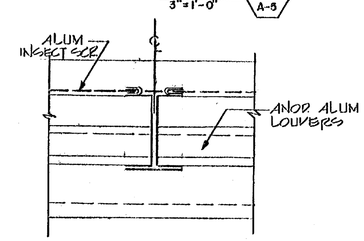

DETAIL 14 A-5
3"=1'-0"

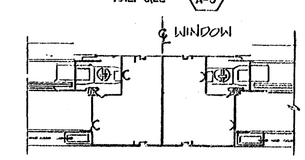

DETAIL 15 A-5
HALF SIZE

NO.	DATE	ISSUED FOR	BY

DESIGNED P.H.V.
DRAWN P.H.V.
CHECKED J.O.H.
APPROVED J.N.R.

P.E.

POST, BUCKLEY, SCHUH & JERNIGAN INC.
CONSULTING ENGINEERS & PLANNERS
HAZEN AND SAWYER, P.C.
CONSULTING ENGINEERS
A JOINT VENTURE
MIAMI 079-001 8940

MIAMI-DADE WATER AND SEWER AUTHORITY

UPGRADING OF EXISTING CENTRAL DISTRICT WASTEWATER TREATMENT PLANT
VIRGINIA KEY, DADE COUNTY, FLORIDA

ARCHITECTURAL
MISCELLANEOUS DETAILS

CONTRACT NUMBER(S) S-285
EPA C120429130
DATE MAR. 15, 1984

DWG. A-10
SHEET 57 OF 74
REF. NO. S-7807-A

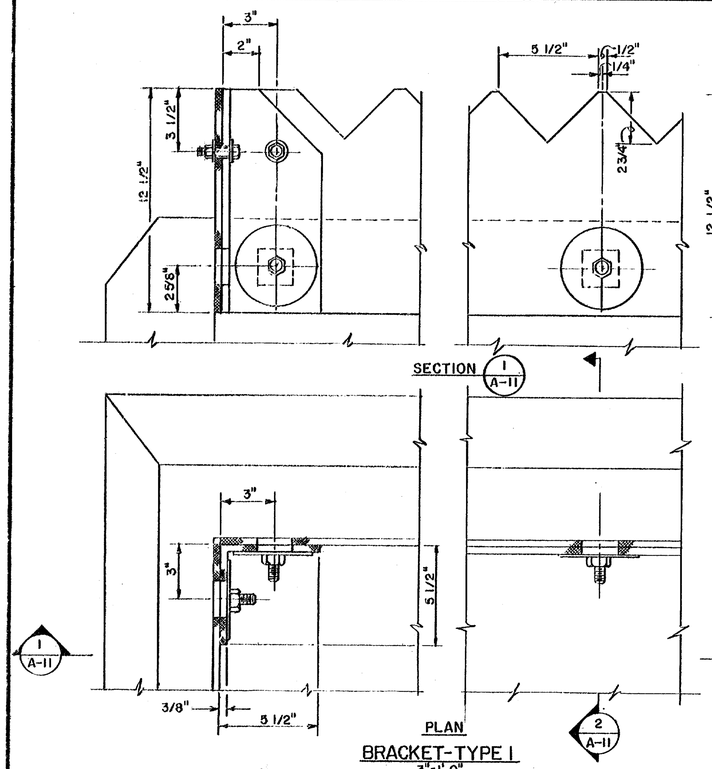

BRACKET-TYPE 1
3"=1'-0"

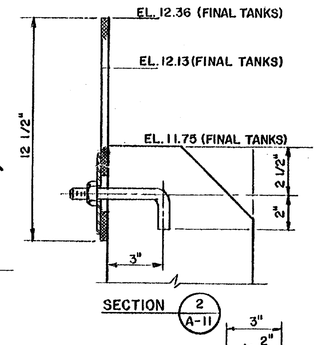

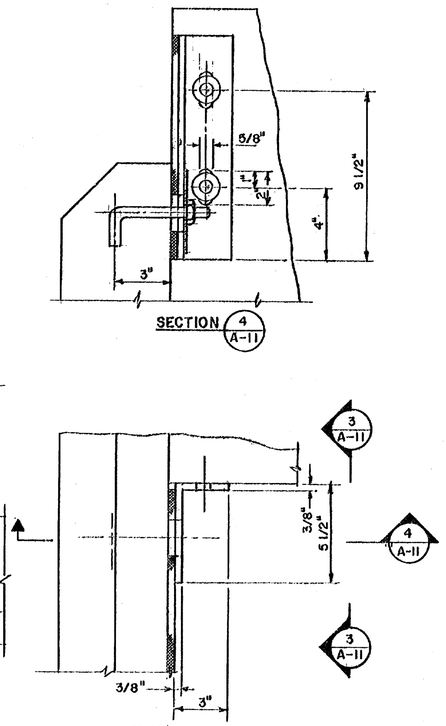

BRACKET-TYPE 2
3"=1'-0"

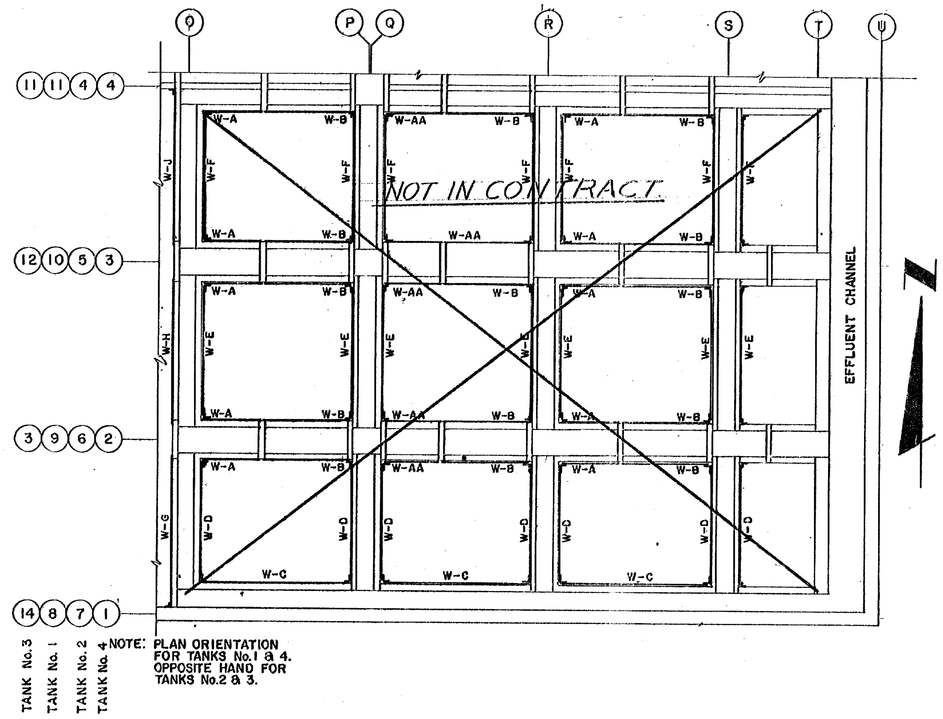

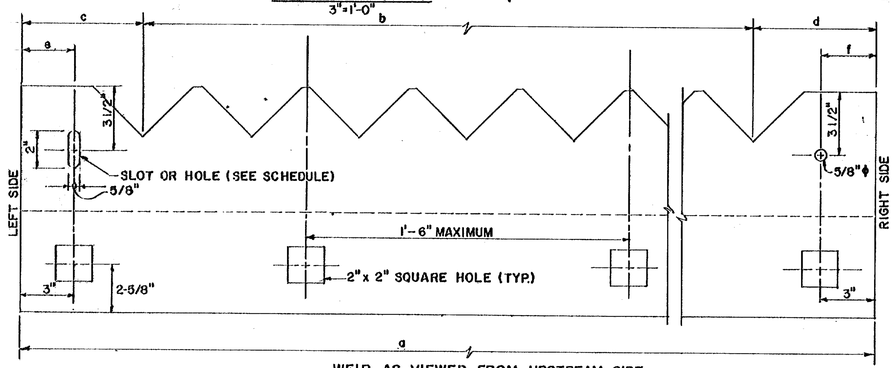

WEIR AS VIEWED FROM UPSTREAM SIDE
3"=1'-0"

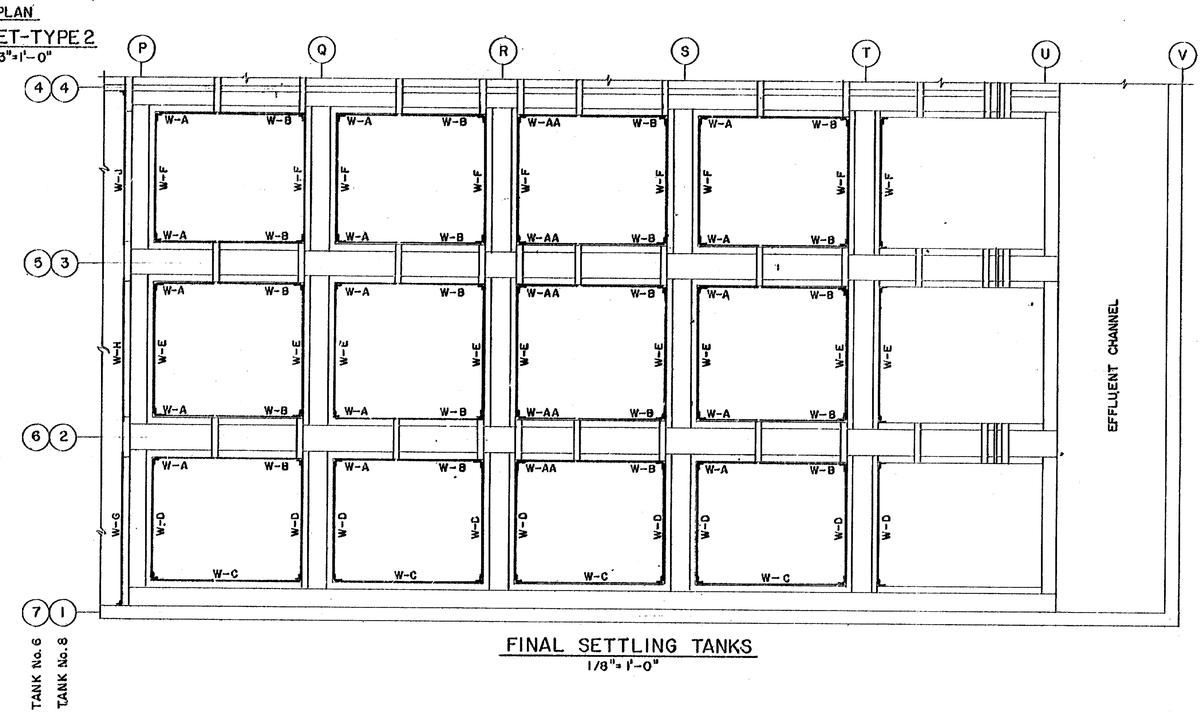

FINAL SETTLING TANKS
1/8"=1'-0"

WEIR SCHEDULE

TYPE	a	b	c	d	e	f	HOLE TYPE LEFT SIDE	HOLE TYPE RIGHT SIDE	BRACKET TYPE LEFT SIDE	BRACKET TYPE RIGHT SIDE	PRIMARY TANKS No. REQUIRED EACH TANK 1	2	3	4	SUB TOTAL	FINAL SETTLING TANKS No. REQUIRED EACH TANK 6	8	TOTAL
W-A	6'-8 5/8"	10@6"=5'-0"	10"	10 5/8"	3"	1 1/2"	HOLE	SLOT	1	NONE	10	10	10	10	40	15	15	30
W-AA	6'-8 5/8"	10@6"=5'-0"	10"	10 5/8"	3"	1 1/2"	SLOT	SLOT	1	NONE	5	5	5	5	20	5	5	10
W-B	10'-2 5/8"	17@6"=8'-6"	10 5/8"	10"	1 1/2"	3"	SLOT	SLOT	NONE	1	15	15	15	15	60	20	20	40
W-C	16'-11 1/4"	32@6"=16'-0"	5 5/8"	5 5/8"	3"	3"	HOLE	HOLE	1	1	3	3	3	3	12	4	4	8
W-D	13'-10 1/4"	26@6"=13'-0"	5 1/8"	5 1/8"	3"	3"	SLOT	HOLE	1	1	7	7	7	7	28	9	9	18
W-E	15'-1 1/4"	28@6"=14'-0"	6 5/8"	6 5/8"	3"	3"	SLOT	SLOT	1	1	7	7	7	7	28	9	9	18
W-F	14'-7 1/4"	27@6"=13'-6"	6 5/8"	6 5/8"	3"	3"	SLOT	SLOT	1	1	7	7	7	7	28	9	9	18
W-G	16'-11"	31@6"=15'-6"	10"	7"	2"	3"	HOLE	SLOT	NONE	2		1	1	1	4	1	1	2
W-H	15'-10"	29@6"=14'-6"	8"	8"	2"	2"	SLOT	SLOT	NONE	NONE		1	1	1	4	1	1	2
W-J	15'-4"	28@6"=14'-6"	8"	8"	2"	2"	SLOT	HOLE	2	NONE	1	1	1	1	4	1	1	2

NOT IN CONTRACT

NO.	DATE	ISSUED FOR	BY
▷	DEC. 21, 1984	ADDENDUM No. 2	

DESIGNED JOH.
DRAWN PHV
CHECKED HJF
APPROVED JNR.

P.E.

POST, BUCKLEY, SCHUH & JERNIGAN INC.
CONSULTING ENGINEERS & PLANNERS
HAZEN AND SAWYER, P.C.
CONSULTING ENGINEERS
MIAMI

A JOINT VENTURE

073-001 8940

MIAMI-DADE WATER AND SEWER AUTHORITY

UPGRADING OF EXISTING CENTRAL DISTRICT WASTEWATER TREATMENT PLANT
VIRGINIA KEY, DADE COUNTY, FLORIDA

ARCHITECTURAL
FINAL SETTLING TANKS - WEIR LOCATION SCHEDULE AND DETAILS

CONTRACT NUMBER(S) S-285
EPA C120429130
DATE MAR. 15, 1984

DWG A-11
SHEET 58 OF 74
REF. NO. S-7808-A

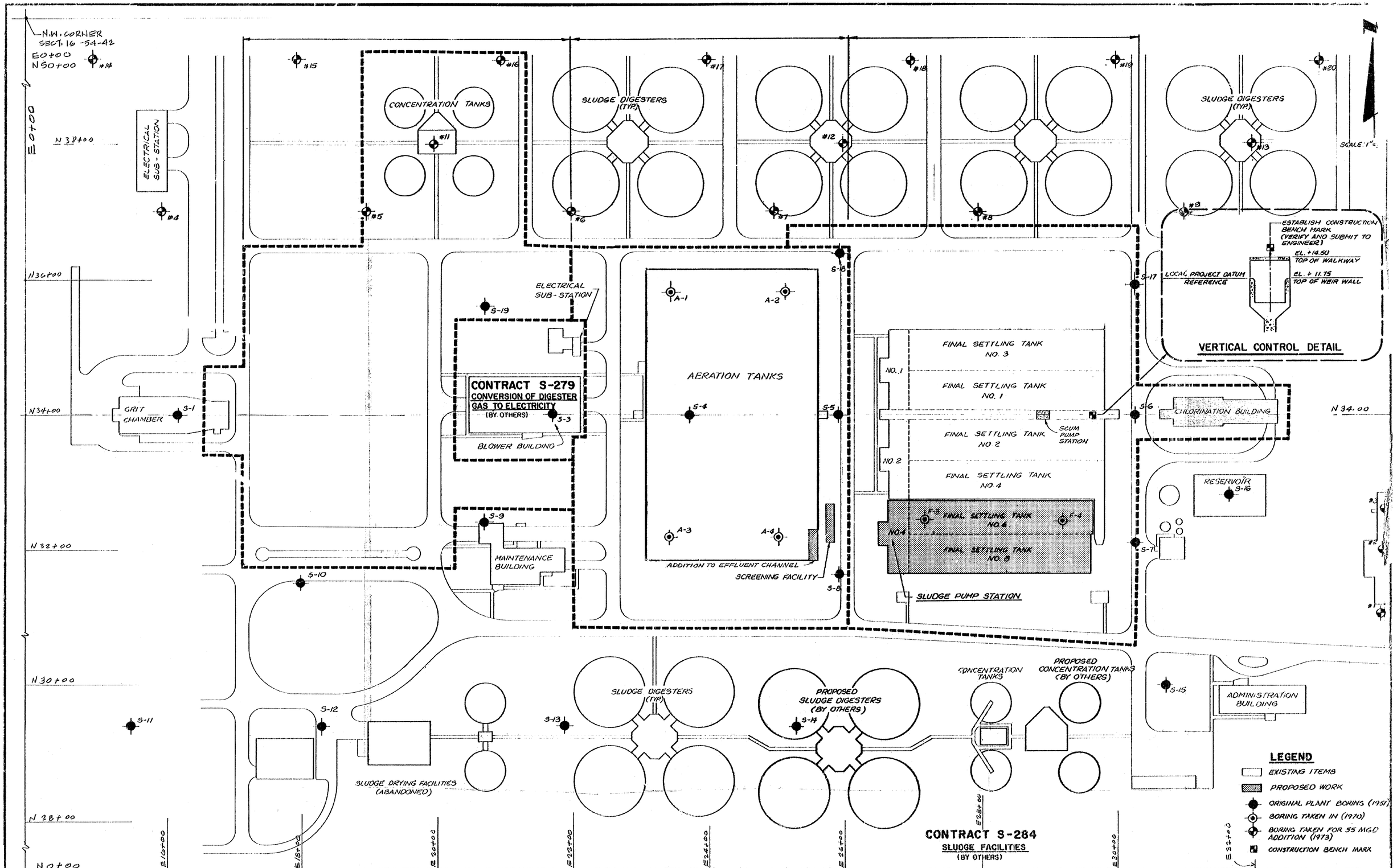

NO.	DATE	ISSUED FOR	BY

DESIGNED J.H.M./R.F.B.
DRAWN M.M.M./R.R.
CHECKED H.K.
APPROVED W.W.R.

P.E.

POST, BUCKLEY, SCHUH & JERNIGAN INC.
CONSULTING ENGINEERS & PLANNERS
HAZEN AND SAWYER, P.C.
CONSULTING ENGINEERS
MIAMI

A JOINT VENTURE

078-001 8940

MIAMI-DADE WATER AND SEWER AUTHORITY

UPGRADING OF EXISTING CENTRAL DISTRICT WASTEWATER TREATMENT PLANT
VIRGINIA KEY, DADE COUNTY, FLORIDA

CIVIL
PROJECT LIMITS, GENERAL ARRANGEMENT AND BORING LOCATIONS

CONTRACT NUMBER(S) S-285
EPA C120429130
DATE MARCH 15, 1984

DWG. C-1
SHEET 3 OF 74
REF. NO. 3-7683-A

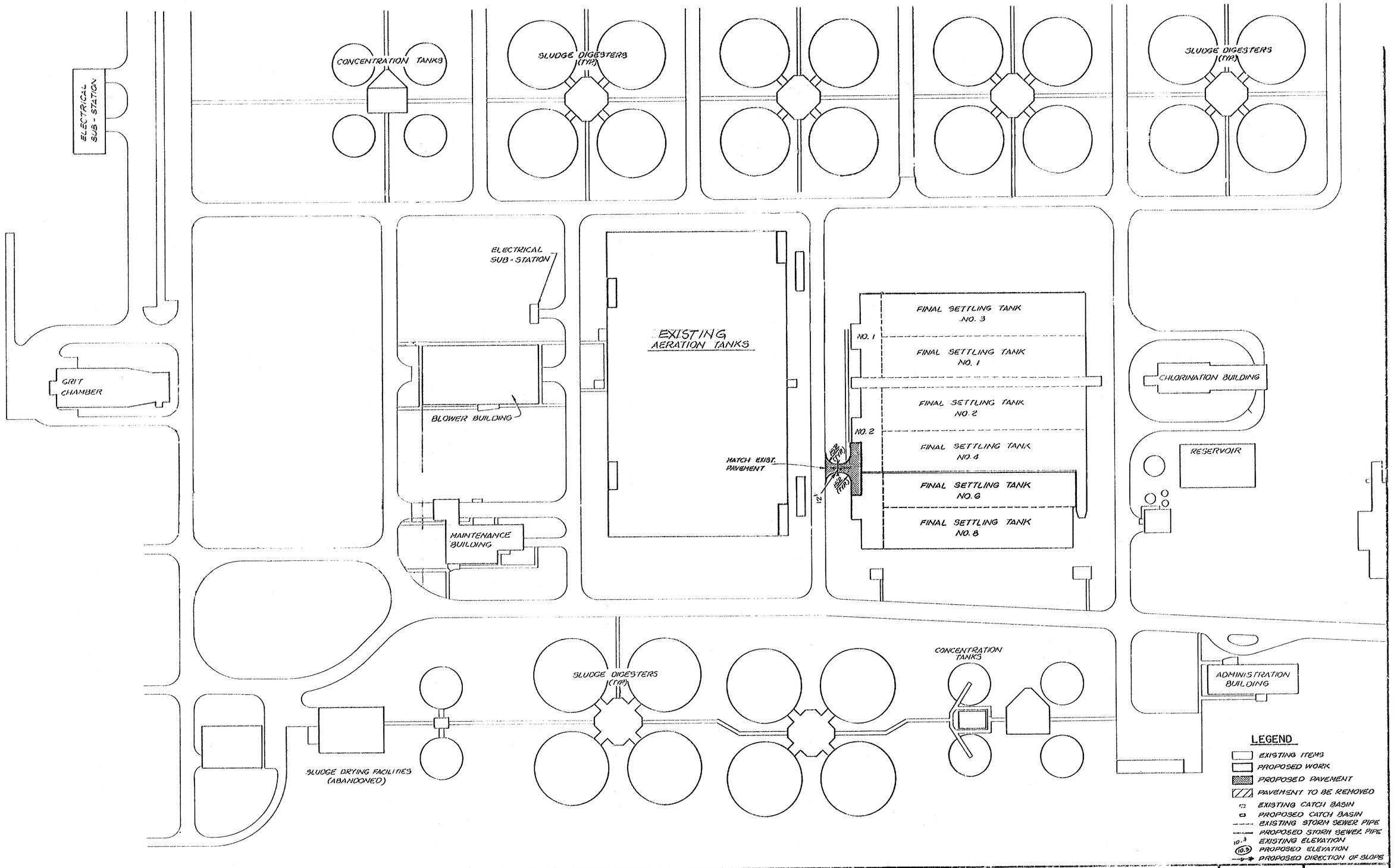

NO.	DATE	ISSUED FOR	BY

DESIGNED J.H.M./R.E.B.
DRAWN M.M.M./R.R.
CHECKED H.K.
APPROVED W.W.R.

P.E.

POST, BUCKLEY, SCHUH & JERNIGAN INC.
CONSULTING ENGINEERS & PLANNERS
HAZEN AND SAWYER, P.C.
CONSULTING ENGINEERS
MIAMI

A JOINT VENTURE

078-001 8940

MIAMI-DADE WATER AND SEWER AUTHORITY

UPGRADING OF EXISTING CENTRAL DISTRICT WASTEWATER TREATMENT PLANT
VIRGINIA KEY, DADE COUNTY, FLORIDA

CIVIL

PAVING, GRADING AND DRAINAGE PLAN

CONTRACT NUMBER(S) S-285
EPA C120429130
DATE MARCH 15, 1984

DWG C-2
SHEET 4 OF 74
REF. NO. S-7694

MIAMI-DADE WATER AND SEWER AUTHORITY DEPARTMENT VIRGINIA KEY, DADE COUNTY, FLORIDA

UPGRADING OF EXISTING CENTRAL DISTRICT WASTEWATER TREATMENT PLANT

E. P. A. PROJECT NO. C 120429130

CONTRACT NO.

METRO-DADE

MIAMI - DADE
WATER AND SEWER AUTHORITY
DEPARTMENT

S-285 -FINAL SETTLING TANKS AND FACILITIES.

APPROVED

GARRETT SLOAN, DIRECTOR	10-30-84 DATE
JAMES T. COWGILL, ASSISTANT DIRECTOR	10-29-84 DATE
CRISPEN N. HAMMOND, CHIEF ENGINEER	10-29-84 DATE
ROBERT READY, RESIDENT ENGINEER	10-30-84 DATE

CONSULTANT

POST, BUCKLEY, SCHUH, & JERNIGAN INC. CONSULTING ENGINEERS & PLANNERS	3-15-84 DATE
HAZEN AND SAWYER, P.C. CONSULTING ENGINEERS	3-15-84 DATE

REFERENCE NO. S-7691-A

POST, BUCKLEY, SCHUH, & JERNIGAN INC.
CONSULTING ENGINEERS & PLANNERS

HAZEN & SAWYER, P.C.
ONSULTING ENGINEERS

ELECTRICAL SYMBOL LEGEND FOR PLANS

SYMBOL	DESCRIPTION
	A - LIGHTING
	CEILING OR PENDANT MOUNTED FIXTURE
	WALL MOUNTED FIXTURE 7'-0" AFF (U.O.N.)
	CEILING OR PENDANT MOUNTED FLUOR. FIXTURE
	WALL MOUNTED FLOOD LIGHT
	POLE MOUNTED FLOOD LIGHT
	POLE MOUNTED H.I.D. AREA LUMINAIRE
	CEILING MOUNTED EXIT SIGN
	WALL MOUNTED EXIT SIGN
	B - RECEPTACLES
	SINGLE RECEPTACLE, 2POLE, 3WIRE, 125V. 20 A., GROUNDING.
	DUPLEX CONVENIENCE RECEPTACLE, 2 POLE 3WIRE, 125 V., 20A, GROUNDING.
	TRIPLEX RECEPTACLE, 2POLE, 3WIRE, 125V., 20 A., GROUNDING.
WP	DUPLEX CONVENIENCE RECEPTACLE WITH CAST 2-FLAP SPRING HINGED, GASKETED WEATHER-PROOF COVER.
	DUPLEX RECEPTACLE MOUNTED HIGHER THAN STD. MTG. HT. (4'-0" AFF)
	EXPLOSION PROOF RECEPTACLE
	SPECIAL PURPOSE RECEPTACLE SIZE & VOLTAGE AS REQUIRED BY LOAD.
	DUPLEX RECEPTACLE MTD. ON EQUIPMENT WITH FLEXIBLE CONDUIT CONNECTION.
	DUPLEX CONVENIENCE RECEPTACLE MTD. ON CONDUIT STUB UP 6" ABOVE FINISHED FLOOR
	C - SWITCHES
S	SINGLE POLE TOGGLE SWITCH 20A - 120, 277 V. (4'-0" AFF)
S_2	DOUBLE POLE TOGGLE SWITCH 20A-120/277V. (4'-0" AFF).
S_3	3-WAY TOGGLE SWITCH 20A-120/277V. (4'-0" AFF).
S_4	4-WAY TOGGLE SWITCH 20A-120/277V. (4'-0" AFF).
S_M	MANUAL MOTOR SWITCH W/O/OVERLOADS (4'-0" AFF).
S_{MO}	MANUAL MOTOR SWITCH W/OVERLOADS (4'-0" AFF).
S_R	SINGLE POLE SWITCH & DUPLEX RECEPTACLE IN 2 GANG PLATE & BOX (4'-0" AFF).
S_P	SINGLE POLE TOGGLE SWITCH WITH PILOT LIGHT (4'-0" AFF).
S_{WP}	SINGLE POLE TOGGLE SWITCH WITH SPRING HINGED. GASKETED WEATHER PROOF COVER. (4'-0" AFF).
S_{EX}	EXPLOSION PROOF

SYMBOL	DESCRIPTION
	D - BOXES AND FITTINGS
J	CEILING MOUNTED JUNCTION BOX
J	WALL MOUNTED JUNCTION BOX.
J	CEILING MOUNTED JUNCTION BOX - CAST & GASKETED.
J	WALL MOUNTED JUNCTION BOX - CAST & GASKETED
	JUNCTION BOX MOUNTED ON CONDUIT STUB UP (6" AFF).
	JUNCTION BOX MOUNTED ON EQUIPMENT W/FLEXIBLE CONDUIT CONNECTION.
PB	PULL BOX - SIZE AS REQUIRED BY CODE OR CONDITIONS IF SIZE NOT NOTED.
	CONDUIT T-FITTING
	CONDUIT LB-FITTING.
B	CONDUIT SEAL FITTING "B" INDICATES BREATHER TYPE SEAL.
	E - WIRING.
1, 3, 5	HOME RUN TO PANEL; "A" PANEL DESIGNATION "1, 3, 5" = CKT. NOS), TICKS = #8 OR #12 WIRES IN 3/4" C UNLESS OTHERWISE NOTED. "G" = SEPARATE GND. WIRE.
	CONDUIT RUN CONCEALED IN CEILING OR WALLS.
	CONDUIT RUN CONCEALED IN FLOOR SLAB OR UNDERGROUND.
	CONDUIT RUN EXPOSED
—T—	TELEPHONE EMPTY CONDUIT SYSTEM, 3/4" C EXCEPT WHERE OTHERWISE NOTED.
	CAPPED CONDUIT
	FLEXIBLE CONDUIT CONNECTION, LIQUID TIGHT CONDUIT IN WET, DRY OR OILY LOCATIONS
	FLEXIBLE CONDUIT CONNECTION, LIQUID TIGHT CONDUIT IN WET, DRY OR OILY LOCATIONS.
	CONDUIT DOWN
	CONDUIT UP
S	CONDUIT STUB UP (6" AFF, CAPPED UNLESS OTHERWISE NOTED).
	-F- TELEPHONE
	WALL MOUNTED TELEPHONE OUTLET
	TELEPHONE OUTLET FOR WALL HUNG TELEPHONE.
	TELEPHONE OUTLET FOR PUBLIC TELEPHONE VERIFY EXACT MTG. HT.
	TELEPHONE TERMINAL SPLICE BOARD (TSB).

SYMBOL	DESCRIPTION
	G - GROUND SYSTEM
	DRIVEN GROUND ROD
	GROUNDING CONDUCTOR
	THERMOWELDED OR BOLTED CONNECTION
	H - EQUIPMENT
	POWER OR DISTRIBUTION PANELBOARD
	LIGHTING PANEL BOARD.
T	DRY TYPE TRANSFORMER - SIZE AS NOTED
	MOTOR SIZE AS NOTED
	MANUAL MOTOR CONTROLLER
	MAGNETIC MOTOR CONTROLLER.
	COMBINATION-MAGNETIC MOTOR CONTROLLER
	MOTOR CONTROL. PUSH BUTTON OR SELECTOR SWITCH STATION.
H	HUMIDISTAT
T	THERMOSTAT
C	CONTACTOR OR CONTACTOR CABINET.
	DISCONNECT SWITCH
2-#6	**I - UNDERGROUND SYSTEM**
	HIGH VOLTAGE UNDERGROUND NON-METALLIC CONDUIT WITH CONCRETE ENCASEMENT NUMBER AND SIZE OF CONDUIT AS INDICATED INSTALL NUMBER AND SIZE CABLE AS INDICATED ON PLAN.
2-#6	LOW VOLTAGE UNDERGROUND NON-METALLIC CONDUIT WITH CONCRETE ENCASEMENT NUMBER AND SIZE OF CONDUIT AS INDICATED INSTALL NUMBER AND SIZE CABLE AS INDICATED ON PLAN.
—T—T—	TELEPHONE UNDERGROUND NON-METALLIC CONDUIT WITH CONCRETE ENCASEMENT NUMBER AND SIZE OF CONDUIT AS INDICATED.
MH VB	ELECTRIC MANHOLE
MH SC	COMMUNICATION MANHOLE
MH IT	TELEPHONE MANHOLE
HH SB	ELECTRICAL HANDHOLE
HH SC	COMMUNICATION HANDHOLE
HH ST	TELEPHONE HANDHOLE
	TELEPHONE TERMINAL BOX.

NUMERALS AND LETTERS INDICATE MANHOLE AND HANDHOLE DESIGNATION.

NO.	DATE	ISSUED FOR	BY

DESIGNED
DRAWN M.G.
CHECKED
APPROVED
P.E.

LOUIS J. AGUIRRE AND ASSOCIATES
CONSULTING ENGINEERS
CORAL GABLES FLORIDA

POST, BUCKLEY, SCHUH & JERNIGAN INC.
CONSULTING ENGINEERS & PLANNERS
HAZEN AND SAWYER, P.C.
CONSULTING ENGINEERS
A JOINT VENTURE
MIAMI 079-001 8940

MIAMI-DADE WATER AND SEWER AUTHORITY
UPGRADING OF EXISTING CENTRAL DISTRICT WASTEWATER TREATMENT PLANT
VIRGINIA KEY, DADE COUNTY, FLORIDA

ELECTRICAL
ELECTRICAL LEGEND-PLANS

CONTRACT NUMBER(S) S-285
EPA C120429130
DATE MAR. 15, 1984

DWG. E-1
SHEET 59 OF 74
REF. NO. S-7809-A

ELECTRICAL SYMBOL LEGEND FOR ONE LINE & WIRING DIAGRAMS

SYMBOL	DESCRIPTION
	POWER TRANSFORMER THREE PHASE { Δ DELTA CONNECTION; Y NEW GROUNDED NEUTRAL CONNECTION
3000/5 3	CURRENT TRANSFORMER "3000/5" INDICATES CURRENT RATIO IN AMPERES NUMERAL INDICATES QUANTITY.
3	POTENTIAL TRANSFORMER MEDIUM VOLTAGE DRAWOUT PRIMARY FUSED NUMERIAL INDICATES QUANTITY.
CPT	CONTROL POWER TRANSFORMER.
1200	MEDIUM VOLTAGE AIR CIRCUIT BREAKER, DRAWOUT NUMERAL INDICATES CONTINUOUS CURRENT RATING.
G	GENERATOR.
	MEDIUM VOLTAGE DISCONNECT SWITCH
	COMBINATION MEDIUM VOLTAGE MOTOR STARTER, DRAWOUT WITH CURRENT LIMITING FUSES
1200 1600 GR	LOW VOLTAGE AIR CIRCUIT BREAKER, DRAWOUT TOP NUMERAL INDICATES TRIP RATING IN AMPERES. BOTTOM NUMERAL INDICATES FRAME SIZE IN AMPERES. "GR" INDICATES GROUND FAULT RELAY.
3P 50 100 3	COMBINATION LOW VOLTAGE MOTOR STARTER WITH MOLDED CASE CIRCUIT BREAKER, NON-REVERSING. TOP NUMERAL INDICATES TRIP RATING IN AMPERES, BOTTOM NUMERAL INDICATES FRAME SIZE IN AMPERES STARTER NUMERAL INDICATES NEMA SIZE.
	LIGHTING ARRESTER STATION TYPE, MEDIUM VOLTAGE.
	LOW VOLTAGE DISCONNECT SWITCH.

SYMBOL	DESCRIPTION
M	MOTOR NUMERAL INDICATES HORSE POWER RATING.
A	PANEL MOUNTED INSTRUMENT "A" INDICATES AMMETER "V" INDICATES VOLTMETER, "KWH" INDICATES KILOWATT-HOUR METER, PF-POWER FACTOR
AS	PANEL MOUNTED INSTRUMENT SWITCH, "AS" INDICATES AMMETER SWITCH "VS" INDICATES VOLTMETER SWITCH
	MEDIUM VOLTAGE TERMINATIONS (POTHEAD)
51	PANEL MOUNTED SWITCHGEAR DEVICES "27" INDICATES UNDERVOLTAGE RELAY "50" INDICATES INSTANTANEOUS OVERCURRENT RELAY "51" INDICATES TIME OVERCURRENT RELAY "55" INDICATES POWER FACTOR RELAY "59" INDICATES OVERVOLTAGE RELAY "60" INDICATES VOLTAGE BALANCE RELAY "67" INDICATES REVERSE POWER RELAY "86" INDICATES LOCK-OUT RELAY "87" INDICATES DIFFERENTIAL CURRENT RELAY.
R	PILOT LIGHT "R" INDICATES RED, "G" INDICATES GREEN "A" INDICATES AMBER.
H-O-A	SELECTOR SWITCH "H-O-A" INDICATES HAND-OFF-AUTOMATIC. "H-A" INDICATES HAND-AUTOMATIC.
ON OFF	TWO ELEMENT PUSHBUTTON STATION MOMENTARY CONTACT
FRS	THREE ELEMENT PUSHBUTTON STATION MOMENTARY CONTACT "F-R-S" INDICATES FORWARD-REVERSE-STOP.
SV	CONTROL DEVICE "SV" INDICATES SOLENOID VALVE, "PS" INDICATES PRESSURE SWITCH "FS" INDICATES FLOAT OR FLOW SWITCH
	CONTACT NORMALLY OPEN.

SYMBOL	DESCRIPTION
	CONTACT NORMALLY CLOSED
NC	NORMALLY CLOSED
NO	NORMALLY OPEN.
LSI	LONG TIME DELAY, SHORT TIME DELAY TRIP, INSTANTANEOUS TRIP.
ST	SHUNT TRIP
K	KEY INTERLOCK.
	PUSHBUTTON NORMALLY OPEN
	PUSHBUTTON NORMALLY CLOSED
	PUSHBUTTON MAINTAINED CONTACT
FS	FLOAT SWITCH

NO.	DATE	ISSUED FOR	BY

DESIGNED
DRAWN M.G.
CHECKED
APPROVED

LOUIS J. AGUIRRE AND ASSOCIATES
CONSULTING ENGINEERS
CORAL GABLES FLORIDA
P.E.

POST, BUCKLEY, SCHUH & JERNIGAN INC.
CONSULTING ENGINEERS & PLANNERS
HAZEN AND SAWYER, P.C.
CONSULTING ENGINEERS
MIAMI
A JOINT VENTURE
078-001 8940

MIAMI-DADE WATER AND SEWER AUTHORITY
UPGRADING OF EXISTING CENTRAL DISTRICT WASTEWATER TREATMENT PLANT
VIRGINIA KEY, DADE COUNTY, FLORIDA

ELECTRICAL
ONE LINE AND WIRING DIAGRAM LEGEND

CONTRACT NUMBER(S) S-285
EPA C120429130
DATE MAR. 15, 1984

DWG. E-2
SHEET 60 OF 74
REF. NO. S-7810-A

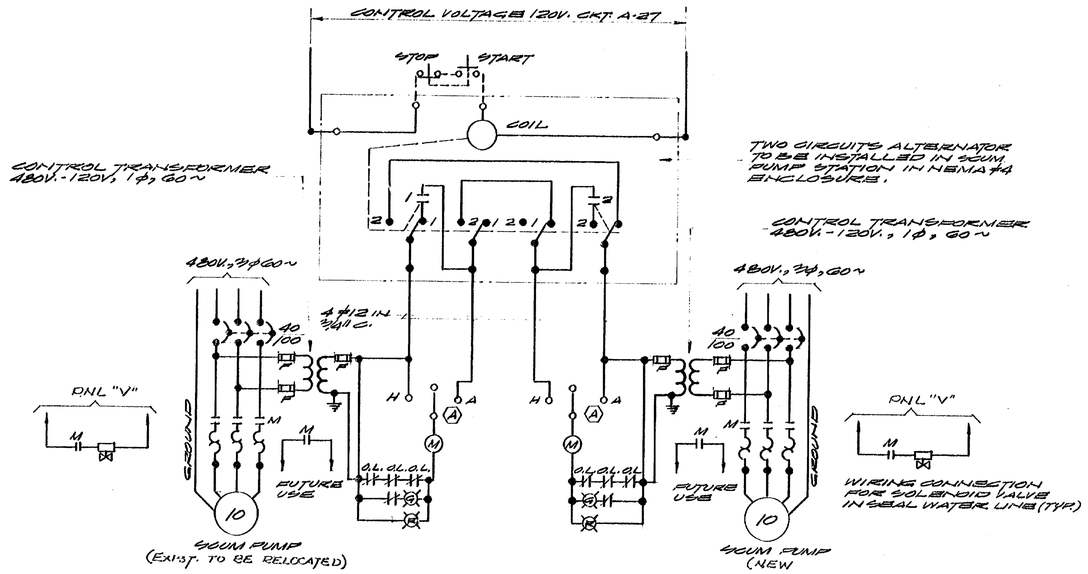

SCUM PUMP STATION

N.T.S.

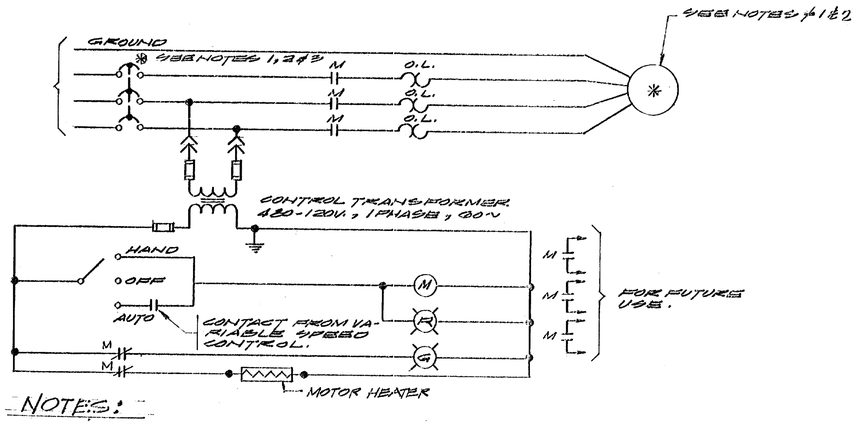

NOTES:

1 - FINAL TANKS WASTE SLUDGE PUMP 10 HP W/ 40 A-3P CB (TYP OF 2)

2 - FINAL TANKS RETURN SLUDGE PUMP 15 HP W/ 40 A.-3P. CB △1

SLUDGE PUMPS

N.T.S.

N.C.C. "R" 480/277V, 600 A. 3 PHASES, 4 WIRES, 60~

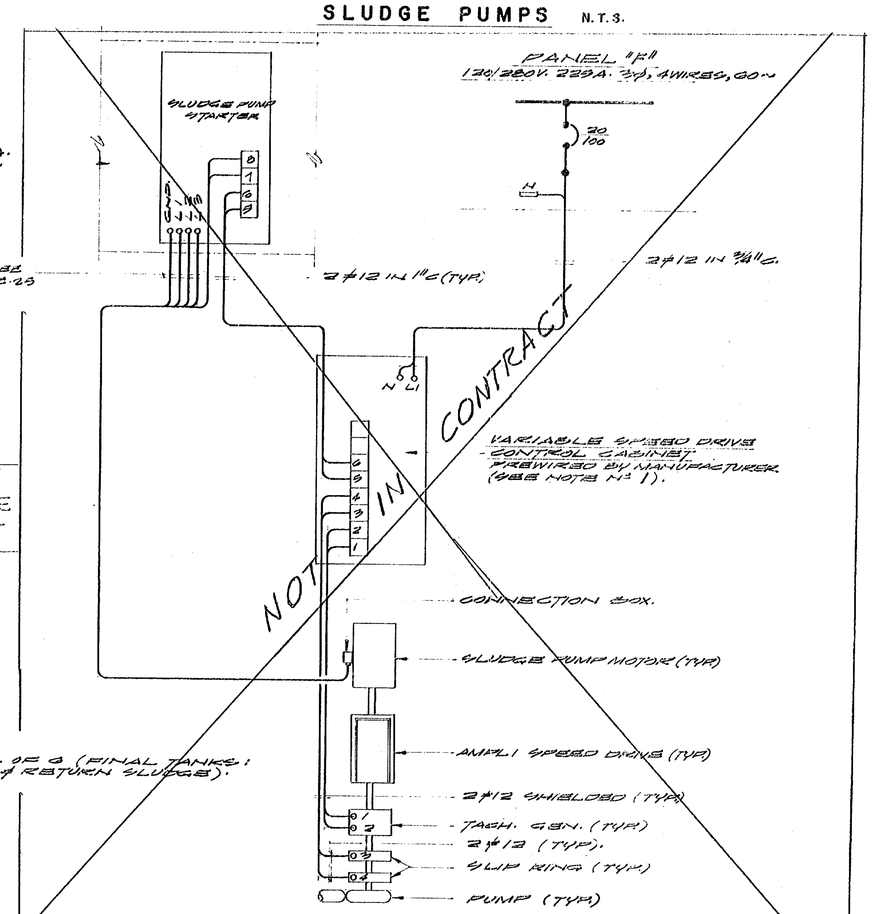

△1 NO VARIABLE SPEED DRIVE IN CONTRACT

NOTE 3

1- TYPICAL OF 4 (FINAL TANKS: WASTE & RETURN SLUDGE).

CONTROL CONNECTION DIAGRAM (FOR SLUDGE PUMPS)

N.T.S.

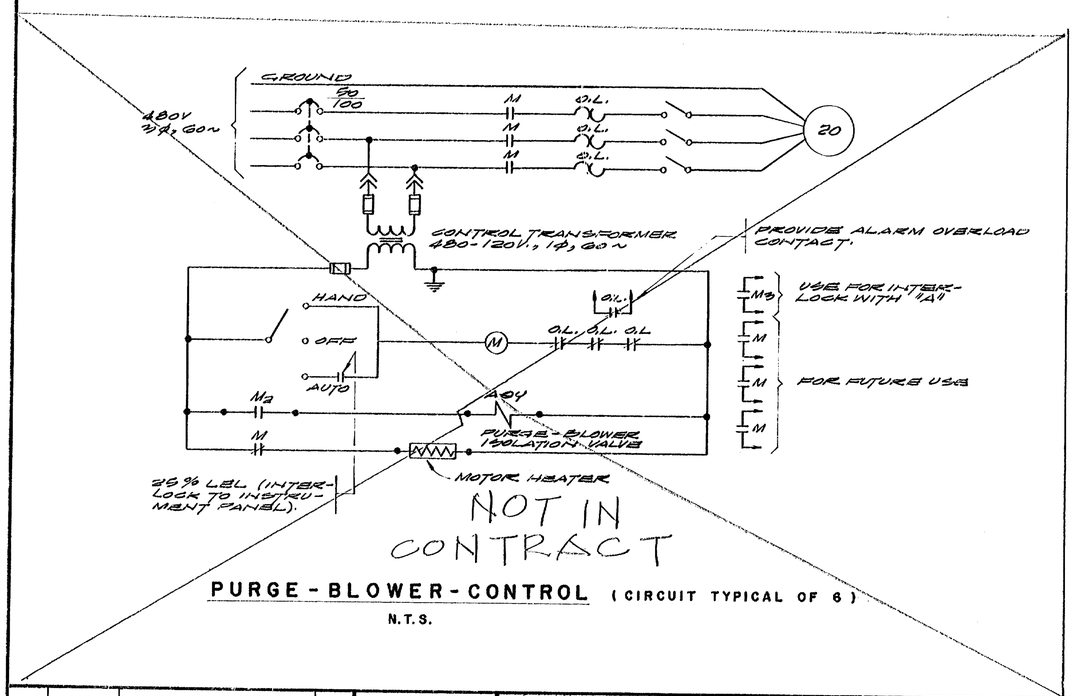

PURGE-BLOWER-CONTROL (CIRCUIT TYPICAL OF 6)

N.T.S.

NO.	DATE	ISSUED FOR	BY
△1	DEC. 21, 1984	ADDENDUM No. 2	O.E.

DESIGNED
DRAWN M.G.
CHECKED
APPROVED

LOUIS J. AGUIRRE AND ASSOCIATES
CONSULTING ENGINEERS
CORAL GABLES FLORIDA
P.E.

POST, BUCKLEY, SCHUH & JERNIGAN INC.
CONSULTING ENGINEERS & PLANNERS
HAZEN AND SAWYER, P.C.
CONSULTING ENGINEERS
MIAMI
A JOINT VENTURE
079-001 8940

MIAMI-DADE WATER AND SEWER AUTHORITY

UPGRADING OF EXISTING CENTRAL DISTRICT WASTEWATER TREATMENT PLANT
VIRGINIA KEY, DADE COUNTY, FLORIDA

ELECTRICAL

SCHEMATIC CONTROL DIAGRAMS AND DETAILS

CONTRACT NUMBER(S) S-285
EPA C120429130
DATE MAR. 15, 1984

DWG E-30
SHEET 73 OF 74
SER NO. S-7839-A

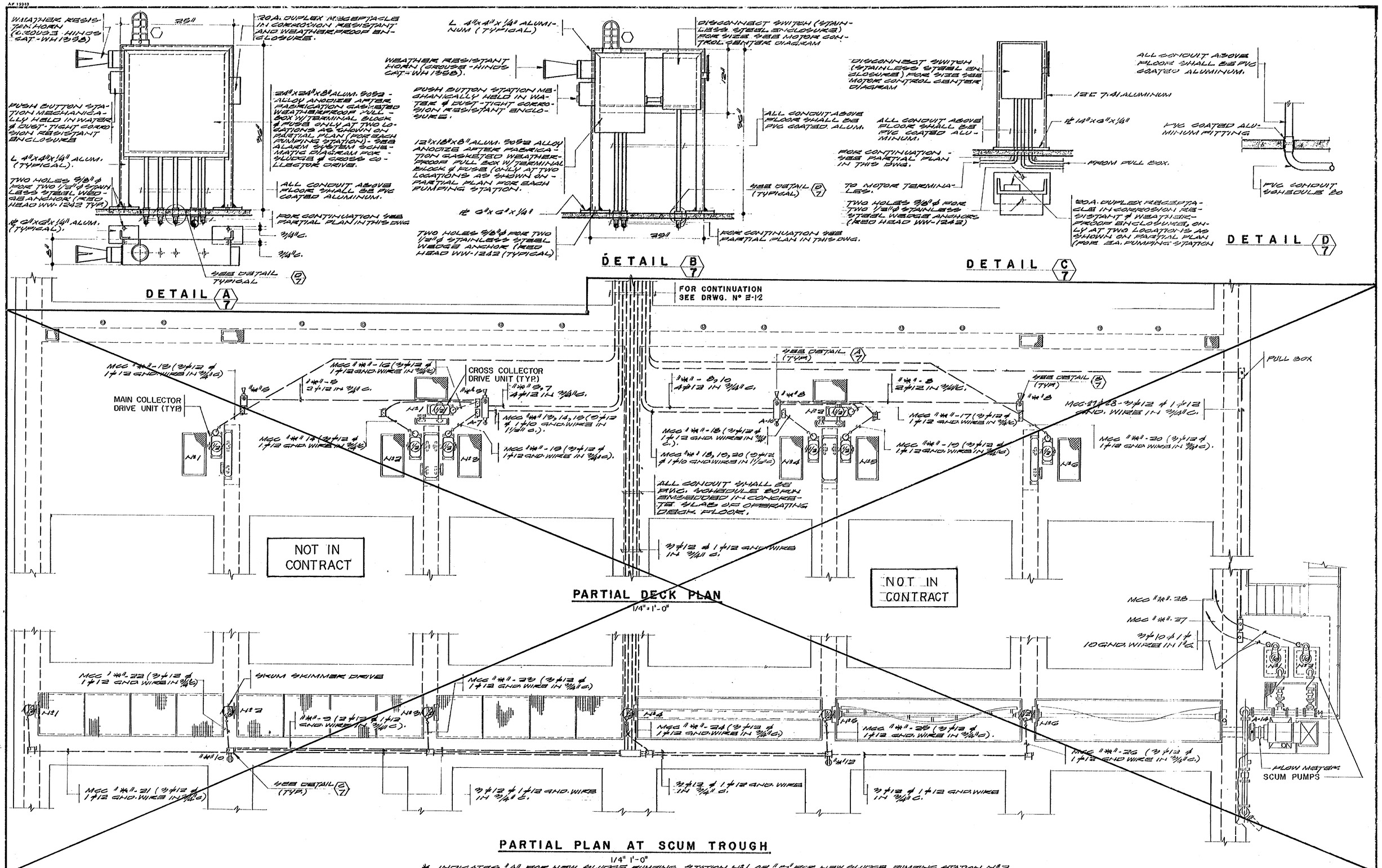

* INDICATES "A" FOR NEW SLUDGE PUMPING STATION Nº1 OR "B" FOR NEW SLUDGE PUMPING STATION Nº2

NO.	DATE	ISSUED FOR	BY

DESIGNED
DRAWN M.G., M.G.
CHECKED
APPROVED

LOUIS J. AGUIRRE AND ASSOCIATES
CONSULTING ENGINEERS
CORAL GABLES FLORIDA
P.E.

POST, BUCKLEY, SCHUH & JERNIGAN INC.
CONSULTING ENGINEERS & PLANNERS
HAZEN AND SAWYER, P.C.
CONSULTING ENGINEERS
A JOINT VENTURE
MIAMI 079-001 8940

MIAMI-DADE WATER AND SEWER AUTHORITY

UPGRADING OF EXISTING CENTRAL DISTRICT WASTEWATER TREATMENT PLANT
VIRGINIA KEY, DADE COUNTY, FLORIDA

ELECTRICAL
FINAL SETTLING TANKS DETAILS

CONTRACT NUMBER(S) S-285
EPA C120429130
DATE MAR. 15, 1984

DWG. E-7
SHEET 64 OF 74
REF. NO. S-7815-A

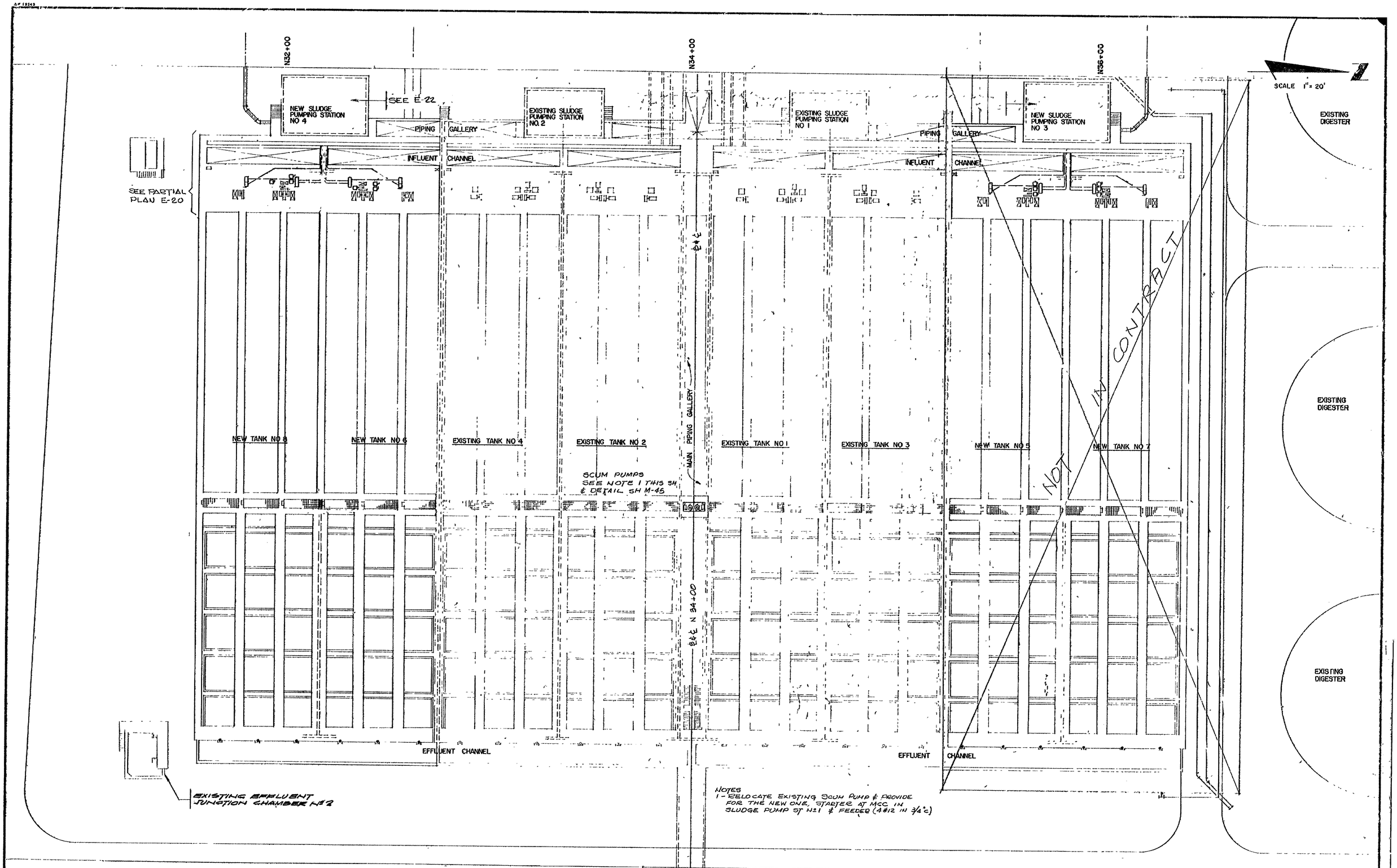

NO	DATE	ISSUED FOR	BY

DESIGNED
DRAWN M.C., F.L.
CHECKED
APPROVED
PE

LOUIS J. AGUIRRE AND ASSOCIATES
CONSULTING ENGINEERS
CORAL GABLES FLORIDA

POST, BUCKLEY, SCHUH & JERNIGAN INC
CONSULTING ENGINEERS & PLANNERS
HAZEN AND SAWYER, PC
CONSULTING ENGINEERS
A JOINT VENTURE
MIAMI 076-001 8940

MIAMI-DADE WATER AND SEWER AUTHORITY
UPGRADING OF EXISTING CENTRAL DISTRICT WASTEWATER TREATMENT PLANT
VIRGINIA KEY, DADE COUNTY, FLORIDA

ELECTRICAL
FINAL SETTLING TANKS
POWER PLAN

CONTRACT NUMBER(S) 18-286
C12D429130
DATE MAR 15, 1984

DWG E-17
SHEET 65 OF 74
REF NO 3-7825-A

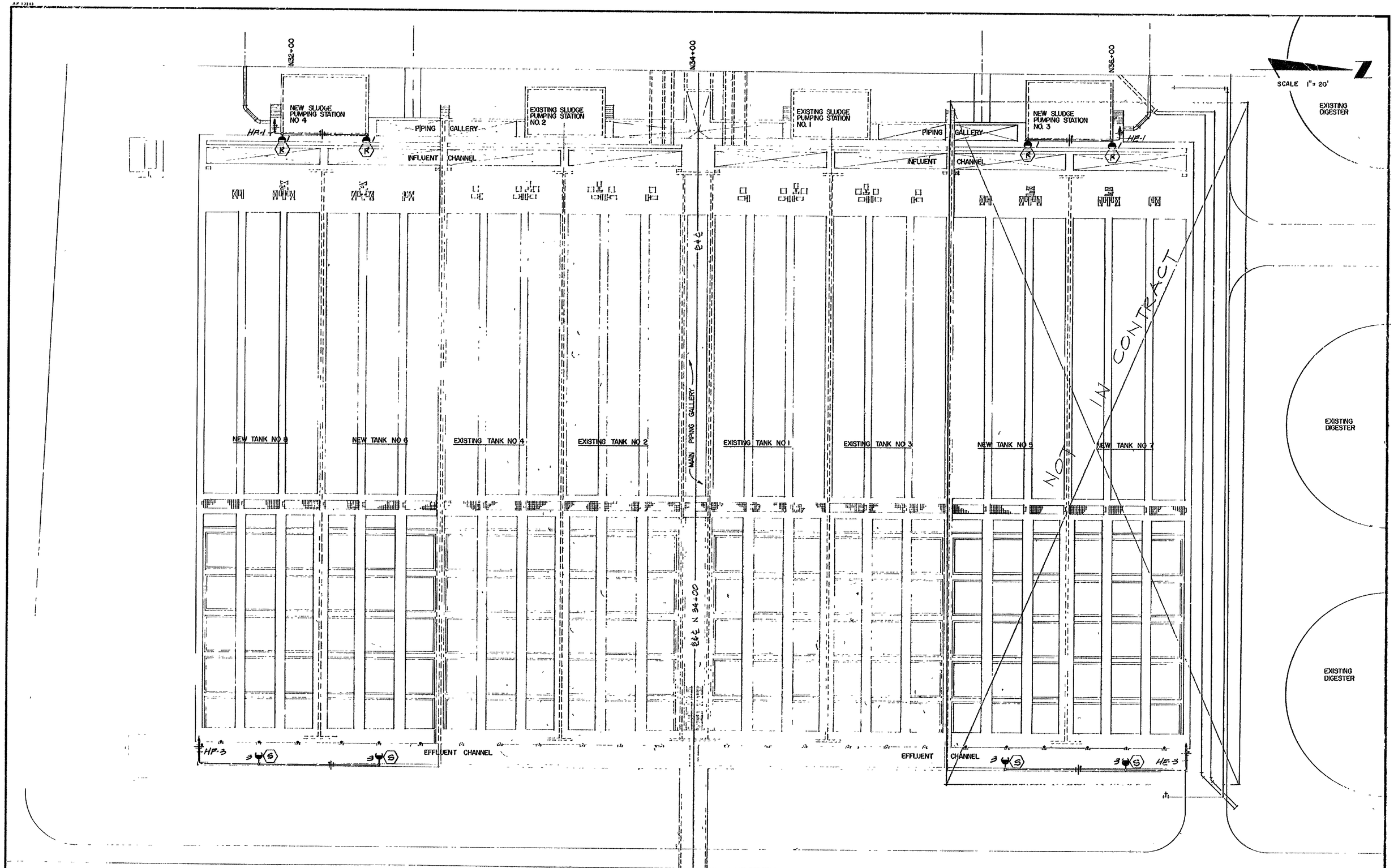

NO	DATE	ISSUED FOR	BY

DESIGNED
DRAWN F.L., M.C.
CHECKED
APPROVED

LOUIS J AGUIRRE AND ASSOCIATES
CONSULTING ENGINEERS
CORAL GABLES FLORIDA
PE

POST, BUCKLEY, SCHUH & JERNIGAN INC
CONSULTING ENGINEERS & PLANNERS
HAZEN AND SAWYER, PC
CONSULTING ENGINEERS
MIAMI 078-001 8940
A JOINT VENTURE

MIAMI-DADE WATER AND SEWER AUTHORITY

UPGRADING OF EXISTING CENTRAL DISTRICT WASTEWATER TREATMENT PLANT
VIRGINIA KEY DADE COUNTY, FLORIDA

ELECTRICAL
FINAL SETTLING TANKS
LIGHTING PLAN

CONTRACT NUMBER(S) S-285
EPA C120429130
DATE MAR 15, 1984

DWG E-18
SHEET 66 OF 74
REF NO S-7826-A

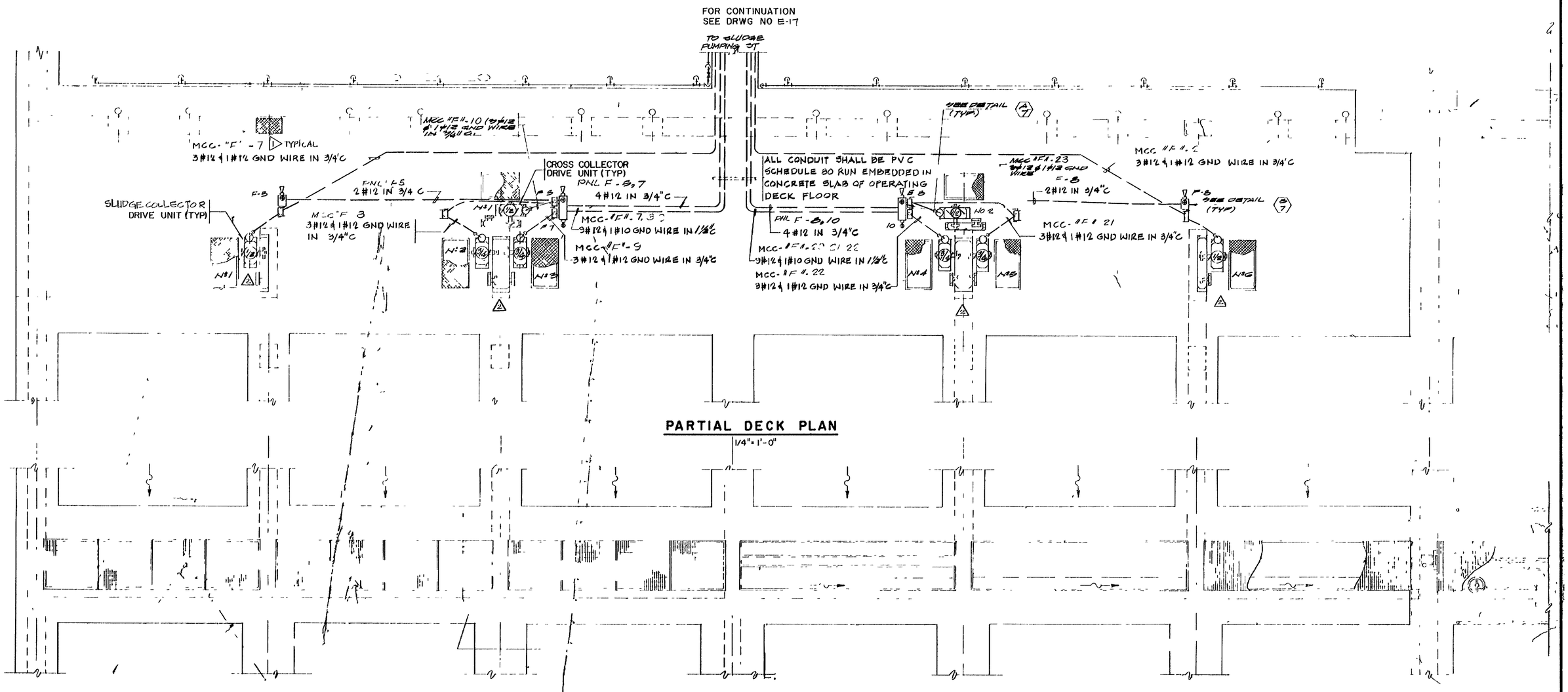

NO	DATE	ISSUED FOR	BY
2	AUG 21, 1986	Revised to allow Interchangeability of collector equipment parts	RV
1	DEC. 21, 1984	ADDENDUM No. 2	

DESIGNED
DRAWN M.G., L.G.
CHECKED
APPROVED
PE

LOUIS J. AGUIRRE AND ASSOCIATES
CONSULTING ENGINEERS
CORAL GABLES FLORIDA

POST, BUCKLEY, SCHUH & JERNIGAN INC
CONSULTING ENGINEERS & PLANNERS
HAZEN AND SAWYER, PC
CONSULTING ENGINEERS
MIAMI 078-001 8940

A JOINT VENTURE

MIAMI-DADE WATER AND SEWER AUTHORITY

UPGRADING OF EXISTING CENTRAL DISTRICT WASTEWATER TREATMENT PLANT
VIRGINIA KEY, DADE COUNTY FLORIDA

ELECTRICAL
FINAL SETTLING TANKS
PARTIAL DECK & SCUM TROUGH PLANS

CONTRACT NUMBERS S-1289
EPA C120429130
DATE MAR 15, 1984

DWG. E-20
SHEET 67 OF 74
REF. NO. S-7828-A

PANEL "HP"

TYPE: LIGHTING ☑ NEMA
SERVICE: 3 Ø, 4 W, 60 HZ
VOLTAGE: 277/480
MOUNTING: SURFACE
USE CIRCUIT BREAKERS RATED FOR MINIMUM OF 14000 A.I.C. @ 480 VOLTS
MAIN BUS: 100 AMP
NEUTRAL: 100 AMP
MAINS: LUGS ONLY
LOCATION: BOTTOM

DEMAND V.A.	NO. DEMAND V.A.	CONDUIT	WIRE	REMARKS	CKT. NO.	TRIP AMP	A	B	C	TRIP AMP	CKT. NO.	REMARKS	WIRE	CONDUIT	NO. DEMAND V.A.	DEMAND V.A.
	900	3/4	2#12	OUTDOOR FL. LTS.	1	20				20	2					
	900	3/4	2#12	OUTDOOR FL. LTS.	3	20				20	4	EXT. XMFR.	3#8	3/4	2000	
	1800	3/4	2#12	UPPER LEVEL LTS.	5	20				20	6					
	2000			SPARE	7	20				20	8	SPACE			2000	
	2000			SPARE	9	20					10	SPACE			2000	
	2000			SPARE	11	20					12	SPACE			2000	
	12600														12000	

DEMAND LOAD:
NO DEMAND LOAD: 33,300 VA
TOTAL LOAD: 33,300 VA
I = 33,300 VA/480√3 = 24 AMP. FED FROM: MCC
FEEDER: 4#3 THW-CU-1/4"C

PANEL "F"

TYPE: ☑ MCCB
SERVICE: 3 Ø, 4 W, 60 HZ
VOLTAGE: 120/208 V
MOUNTING: SURFACE
PROVIDE GROUNDING BAR KIT
USE CIRCUIT BREAKERS RATED FOR MINIMUM OF 10000 A.I.C. @ 240 VOLTS
MAIN BUS: 225 AMP
NEUTRAL: 225 AMP
MAINS: 100A, 3P.C.B.
LOCATION: TOP

DEMAND V.A.	NO. DEMAND V.A.	CONDUIT	WIRE	REMARKS	CKT. NO.	TRIP AMP	A	B	C	TRIP AMP	CKT. NO.	REMARKS	WIRE	CONDUIT	NO. DEMAND V.A.	DEMAND V.A.
	600	3/4	2#12	ENTRY LTS.	1	20				20	2	EXIT LTS.	2#12	3/4	100	
	800	3/4	2#12	LOWER LEVEL LTS	3	20				20	4	UPPER LEVEL RECP.	2#12	3/4	720	
	720	3/4	2#12	ALARM CROSSCON.	5	20				20	6	LOWER LEVEL RECP.	2#12	3/4	720	
	720	3/4	2#12	DECK RECEPT.	7*	20				20	8	ALARM CROSS CON.	2#12	3/4	720	
	720	3/4	2#12	DECK RECEPT.	9*	20				20	10*	DECK RECEPT.	2#12	3/4	720	
	720	3/4	2#12	EXHAUST FAN Nº1	11	20				20	12*	DECK RECEPT.	2#12	3/4	720	
	720	3/4	2#12	EXHAUST FAN Nº2	13	20				20	14	FLOWMETER	2#12	3/4	720	
	720			SPARE	15	20				20	16	FLOWMETER	2#12	3/4	720	
	720				17	20				20	18	FLOWMETER	2#12	3/4	720	
	720				19	20				20	20	FLOWMETER	2#12	3/4	720	
	720				21	20				30	22	A/C (HT9 W)	10	3/4	4049	
	720	3/4	2#12	SPARE	23	20				30	24	3.75 KW HTR.	-	-	-	
					25	20				30	26	A/C (CL9)	10	3/4	(3197)	
					27	20				20	28		-	-	-	
				SPACE	29	20				20	30	SPACE	2#12	3/4	720	
					31	20				20	32					
					33	20				20	34					
					35	20					36	SPACE				
					37	20					38					
					39	20					40					
					41	20					42					
	14214														9209	

* G.F.I. CIRCUIT BREAKER

DEMAND LOAD:
NO DEMAND LOAD: 29609 VA
TOTAL LOAD: 29609 VA
I = 29609 VA/208√3 = 82 AMP
FEEDER: 4#2 THW-CU-1 1/4"C.
FED FROM: ENL. 1HE1 OR 1HE1 THRU 30KVA D.T. XFMER

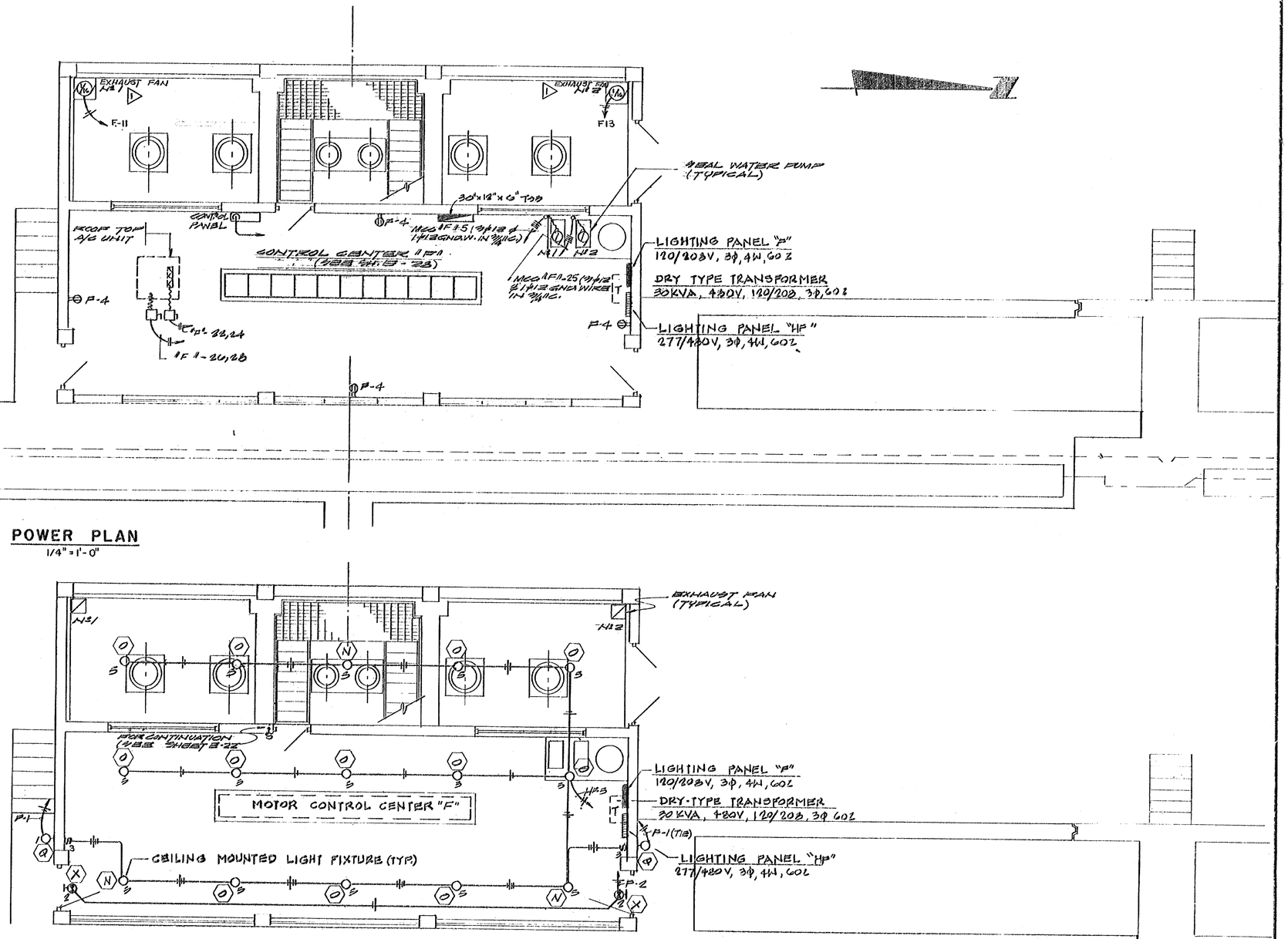

POWER PLAN
1/4" = 1'-0"

LIGHTING PLAN
1/4" = 1'-0"

NO.	DATE	ISSUED FOR	BY
1	DEC. 21, 1984	ADDENDUM NO. 2	

DESIGNED
DRAWN M.G., L.R.
CHECKED
APPROVED

LOUIS J. AGUIRRE AND ASSOCIATES
CONSULTING ENGINEERS
CORAL GABLES FLORIDA
P.E.

POST, BUCKLEY, SCHUH & JERNIGAN INC.
CONSULTING ENGINEERS & PLANNERS
HAZEN AND SAWYER, P.C.
CONSULTING ENGINEERS
A JOINT VENTURE
MIAMI 079-001 8940

MIAMI-DADE WATER AND SEWER AUTHORITY

UPGRADING OF EXISTING CENTRAL DISTRICT WASTEWATER TREATMENT PLANT
VIRGINIA KEY, DADE COUNTY, FLORIDA

ELECTRICAL
FINAL SETTLING TANKS
NEW SLUDGE PUMPING STATION
UPPER LEVEL-POWER & LIGHTING

CONTRACT NUMBER(S) S-285
EPA C120429130
DATE MAR. 15, 1984
DWG. E-21
SHEET 68 OF 74
REF. NO. 3-7829

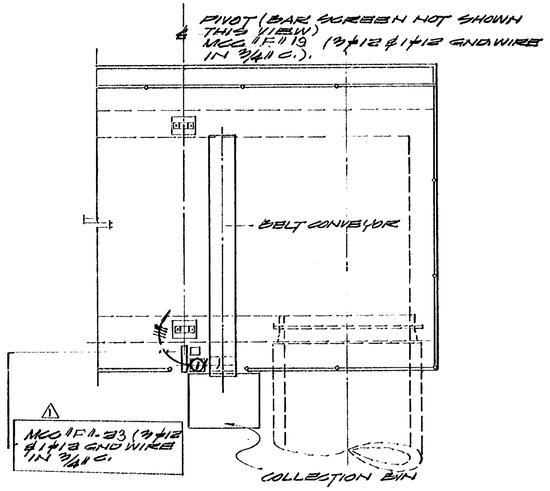

PARTIAL SCREENING FACILITY PLAN
SCALE: 1/4" = 1'-0"

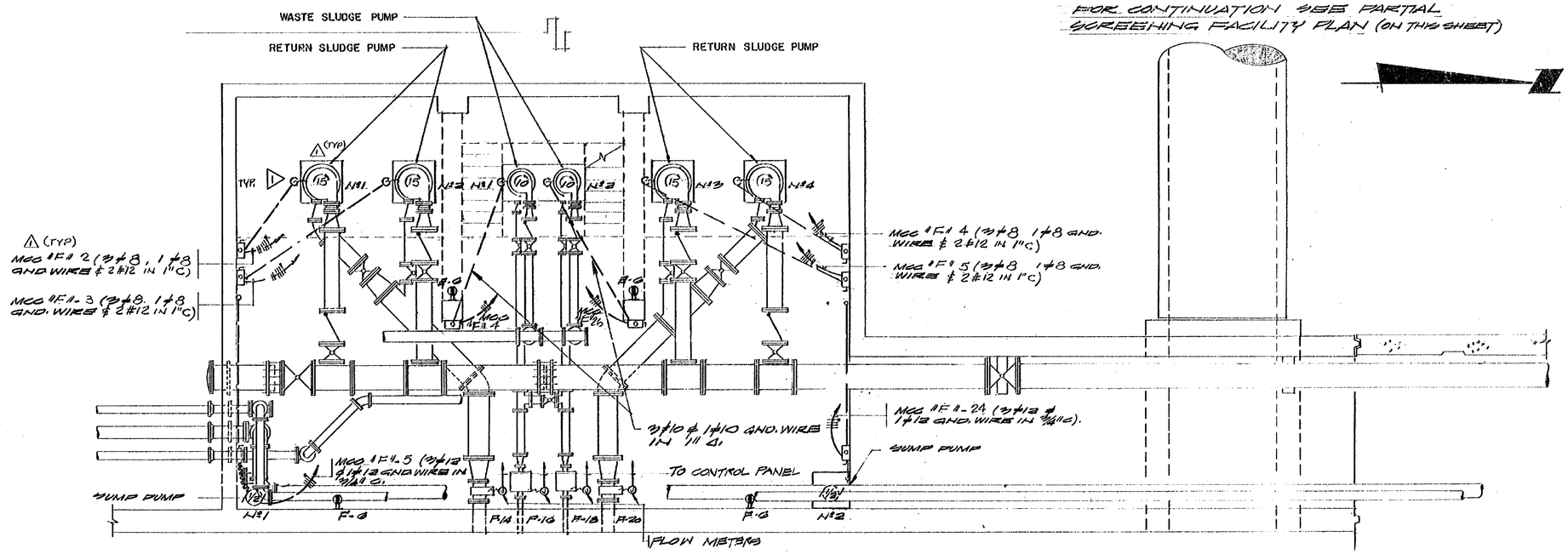

POWER PLAN
1/4" = 1'-0"

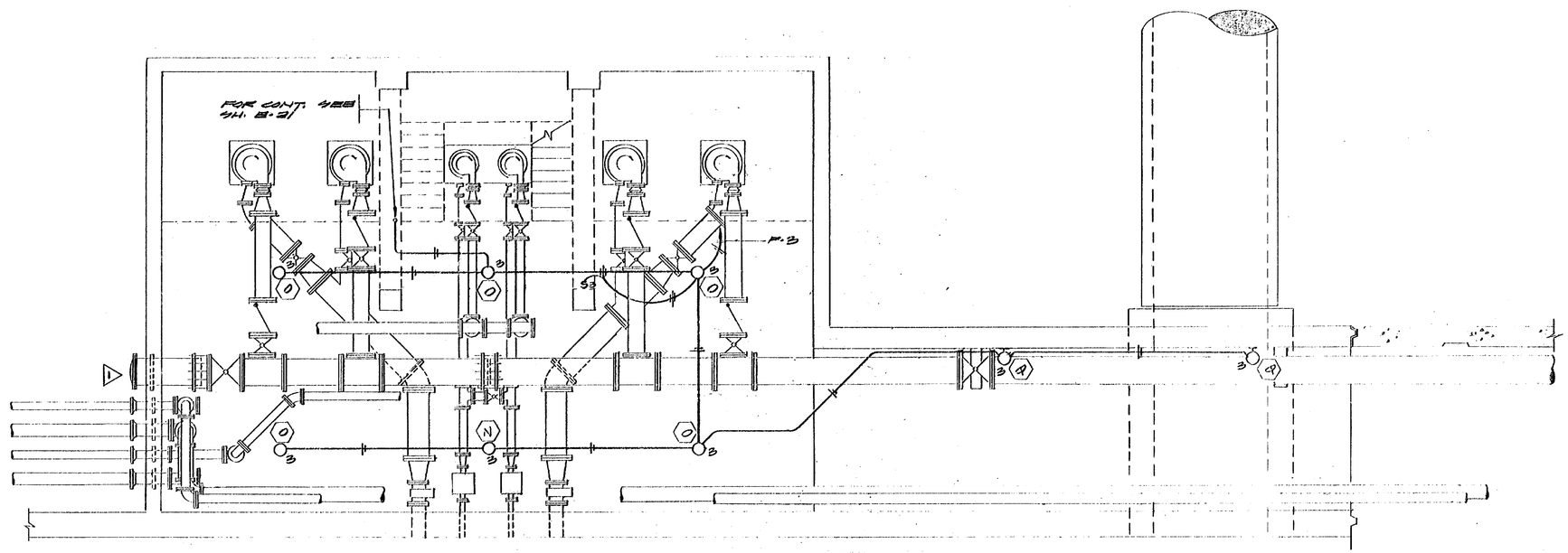

LIGHTING PLAN
1/4" = 1'-0"

NO.	DATE	ISSUED FOR	BY
1	DEC. 21, 1984	ADDENDUM No. 2	

DESIGNED
DRAWN M.G., M.G.
CHECKED
APPROVED
P.E.

LOUIS J. AGUIRRE AND ASSOCIATES
CONSULTING ENGINEERS
CORAL GABLES FLORIDA

POST, BUCKLEY, SCHUH & JERNIGAN INC.
CONSULTING ENGINEERS & PLANNERS
HAZEN AND SAWYER, P.C.
CONSULTING ENGINEERS
MIAMI 078-001 8940

MIAMI-DADE WATER AND SEWER AUTHORITY

UPGRADING OF EXISTING CENTRAL DISTRICT WASTEWATER TREATMENT PLANT
VIRGINIA KEY, DADE COUNTY, FLORIDA

ELECTRICAL
FINAL SETTLING TANKS
NEW SLUDGE PUMPING STATION
LOWER LEVEL - POWER & LIGHTING

CONTRACT NUMBER(S) S-285
EPA C120429130
DATE MAR. 15, 1984

DWG. E-22
SHEET 69 OF 74
REF. NO. S-7830-A

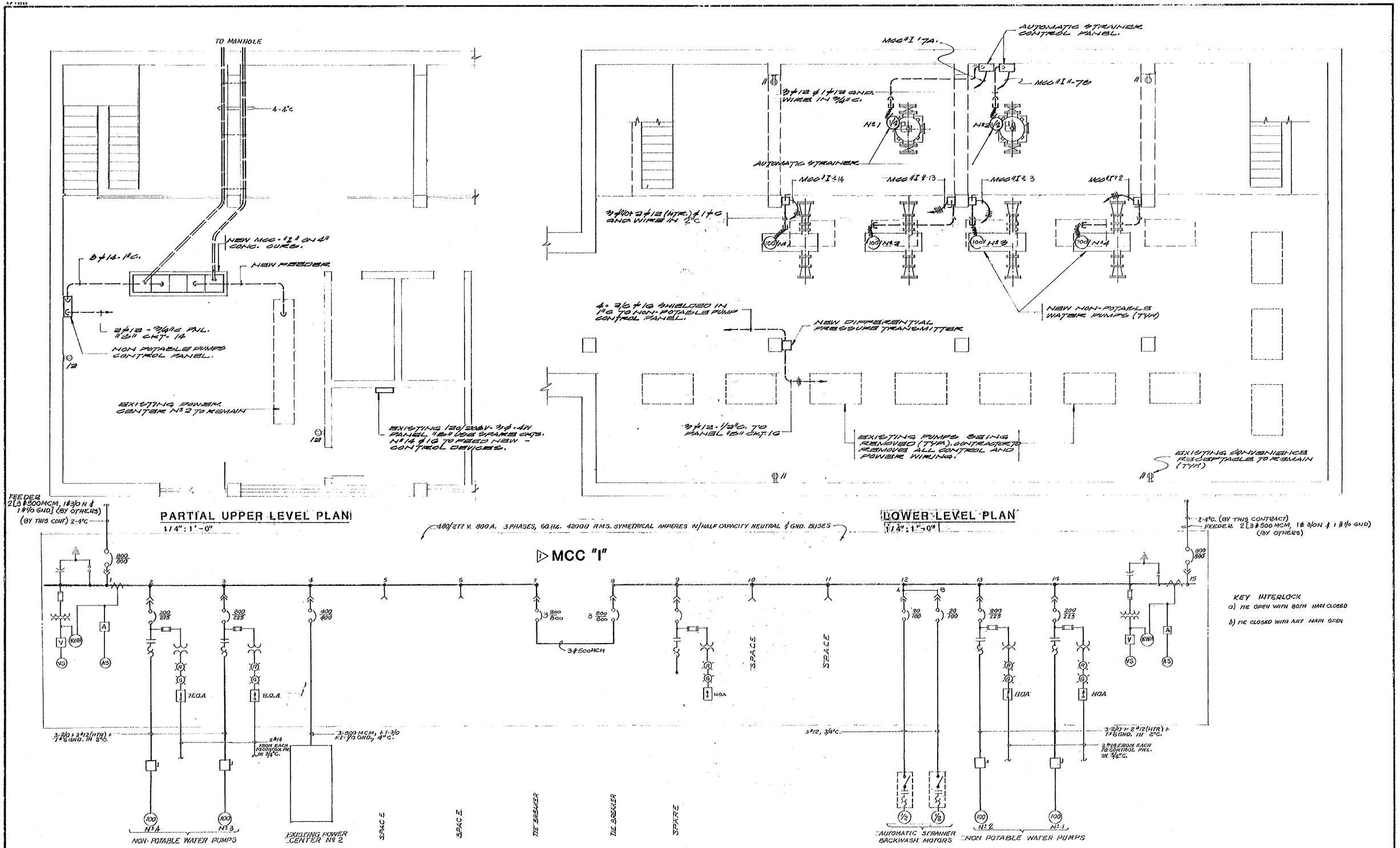

NO.	DATE	ISSUED FOR	BY
1	DEC. 21, 1984	ADDENDUM No. 2	

DESIGNED
DRAWN L.B., M.G.
CHECKED
APPROVED
P.E.

LOUIS J. AGUIRRE AND ASSOCIATES
CONSULTING ENGINEERS
CORAL GABLES FLORIDA

POST, BUCKLEY, SCHUH & JERNIGAN INC.
CONSULTING ENGINEERS & PLANNERS
HAZEN AND SAWYER, P.C.
CONSULTING ENGINEERS
MIAMI
A JOINT VENTURE
079-001 8940

MIAMI-DADE WATER AND SEWER AUTHORITY

UPGRADING OF EXISTING CENTRAL DISTRICT WASTEWATER TREATMENT PLANT
VIRGINIA KEY, DADE COUNTY, FLORIDA

CHLORINATION BUILDING MODIFICATIONS

CONTRACT NUMBER(S) S-285
EPA C120429130
DATE MAR. 15, 1984
DWG. E-24
SHEET 70 OF 74
REF. NO S-7832-A

AF 13343

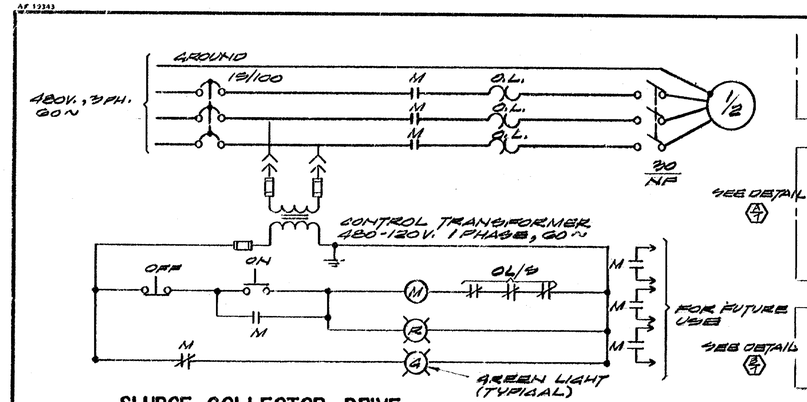

SLUDGE COLLECTOR DRIVE (TYP OF 6)
N.T.S.

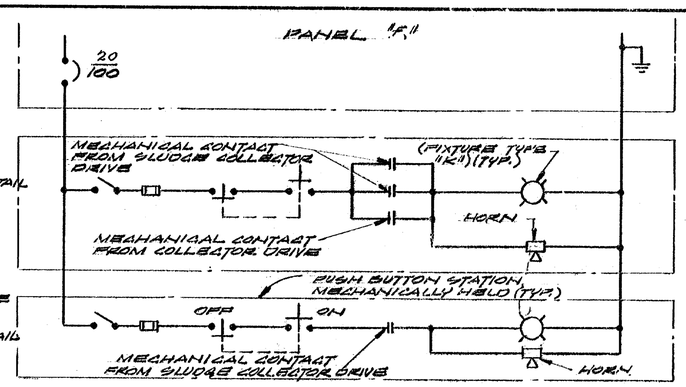

ALARM SYSTEM SCHEMATIC DIAGRAM FOR SLUDGE & CROSS COLLECTOR DRIVE
NTS

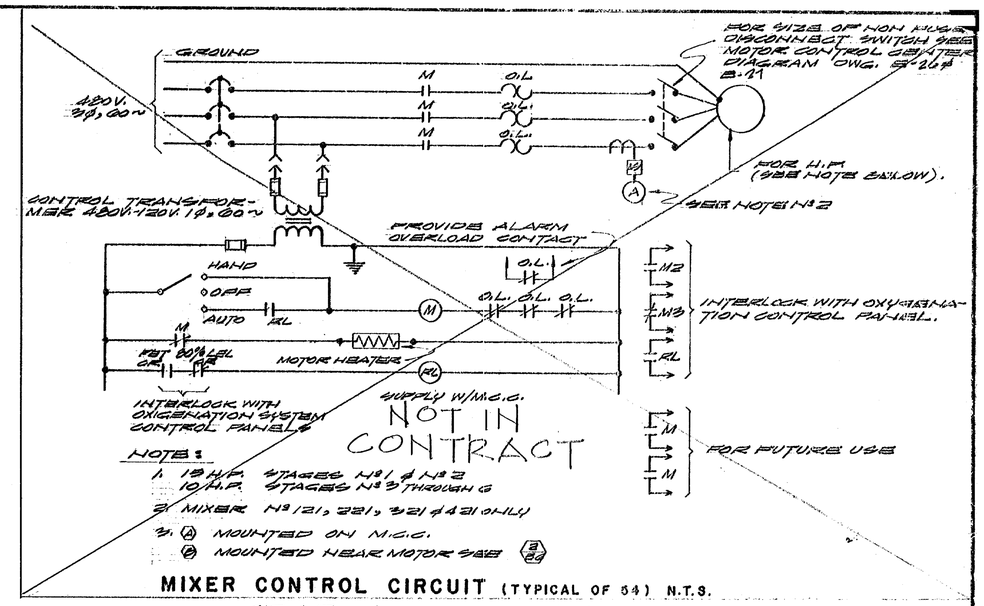

MIXER CONTROL CIRCUIT (TYPICAL OF 54) N.T.S.

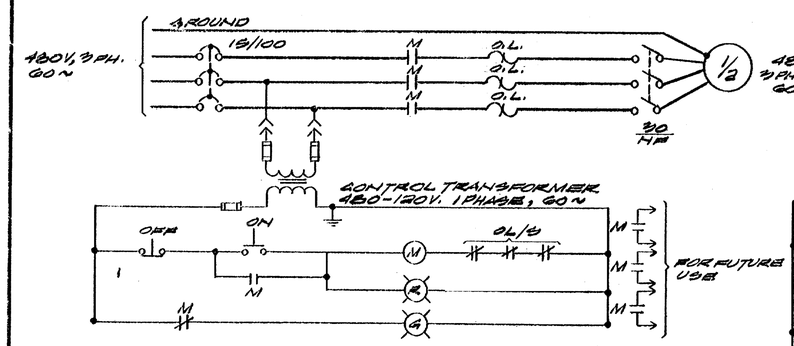

CROSS COLLECTION DRIVE (TYP OF 2)
N.T.S.

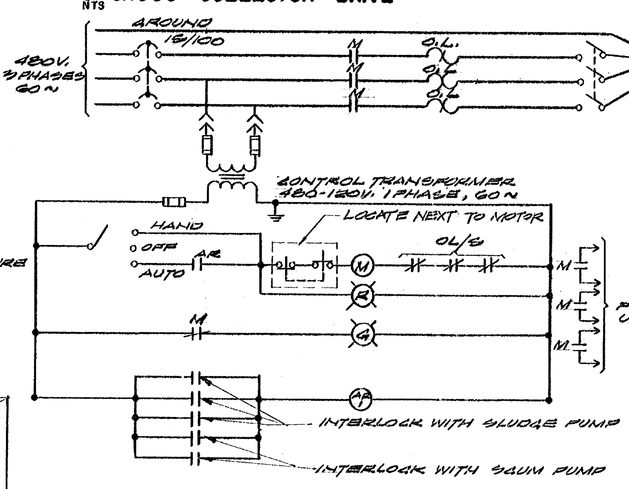

WATER SEAL PUMP (TYP OF 2)
N.T.S.

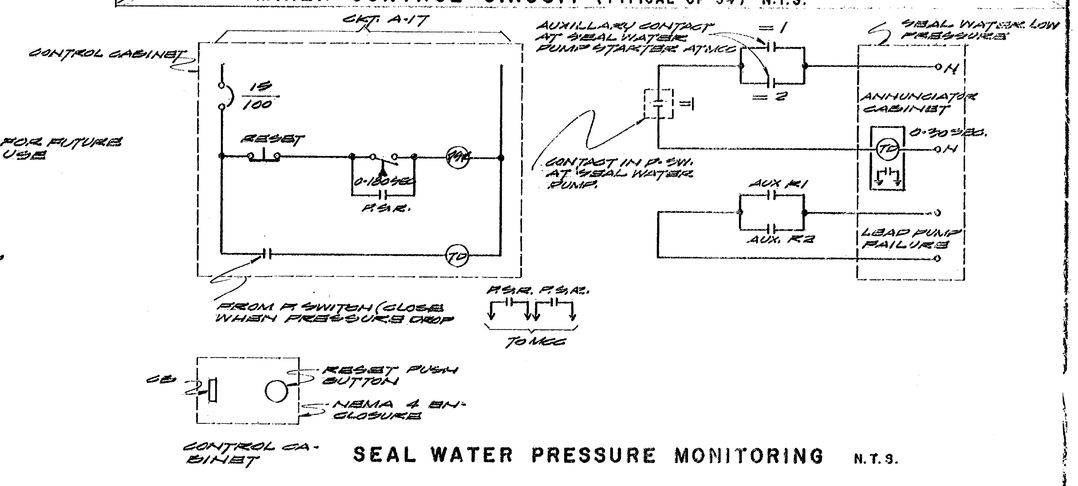

SEAL WATER PRESSURE MONITORING N.T.S.

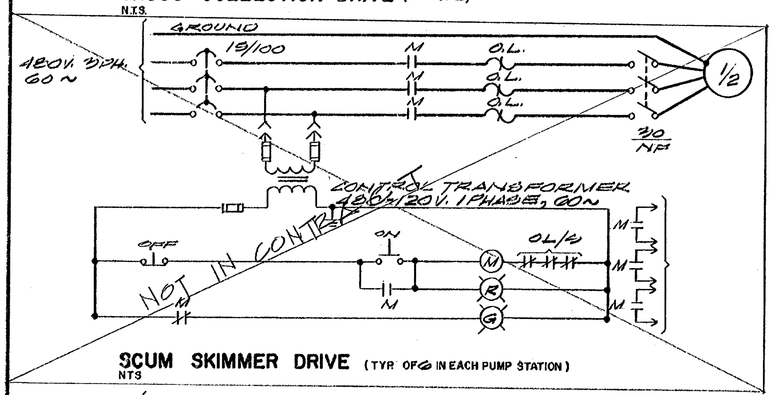

SCUM SKIMMER DRIVE (TYP OF 6 IN EACH PUMP STATION)
NTS

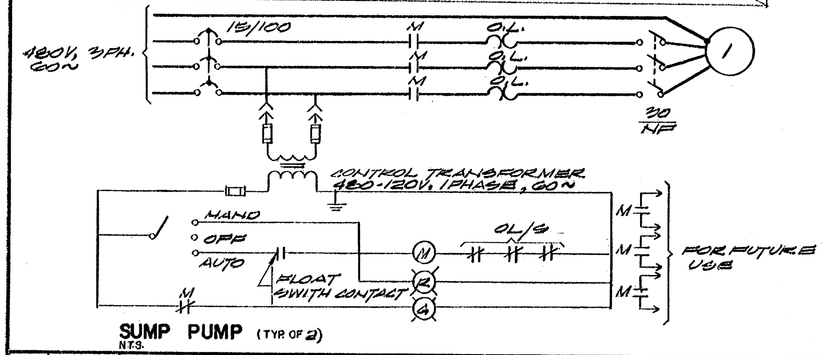

SUMP PUMP (TYP OF 2)
N.T.S.

SEAL WATER PUMP OPERATING SEQUENCE

1.- START PUMP #1 IN HAND POSITION W/PUMP #2 IN OFF POSITION OR VICEVERSA.

2.- ENERGIZE (PR) RELAY CLOSING C.B. AT RELAY CABINET

3.- CHANGE PUMP #2 TO AUTO POSITION (NOW PUMP #2 WILL BE AUTOMATIC BACK UP PUMP.

4.- IF LEAD PUMP FAILED TO START, OR FAILED WHILE RUNNING THE PRESSURE SWITCH PS-1 WILL STAY CLOSE OR RETURN TO CLOSE POSITION AND ENERGIZE (PR)

5.- A CONTACT OF (PR) WILL BE CLOSE AND ENERGIZE CONTROL CKT OF PUMP #2 AND START TO RUN AND WILL SEND A SIGNAL TO ANNUNCIATOR (LEAD SEAL WATER PUMP - FAILURE.

NO.	DATE	ISSUED FOR	BY

DESIGNED
DRAWN M.C.
CHECKED
APPROVED

LOUIS J. AGUIRRE AND ASSOCIATES
CONSULTING ENGINEERS
CORAL GABLES FLORIDA
P.E.

POST, BUCKLEY, SCHUH & JERNIGAN INC.
CONSULTING ENGINEERS & PLANNERS
HAZEN AND SAWYER, P.C.
CONSULTING ENGINEERS
MIAMI
078-001 8940

A JOINT VENTURE

MIAMI-DADE WATER AND SEWER AUTHORITY

UPGRADING OF EXISTING CENTRAL DISTRICT WASTEWATER TREATMENT PLANT
VIRGINIA KEY, DADE COUNTY, FLORIDA

ELECTRICAL
SCHEMATIC CONTROL DIAGRAMS AND DETAILS

CONTRACT NUMBER(S) S-285
EPA C120429130
DATE MAR. 15, 1984

DWG. E-29
SHEET 72 OF 74
REF. NO. S-7837-A

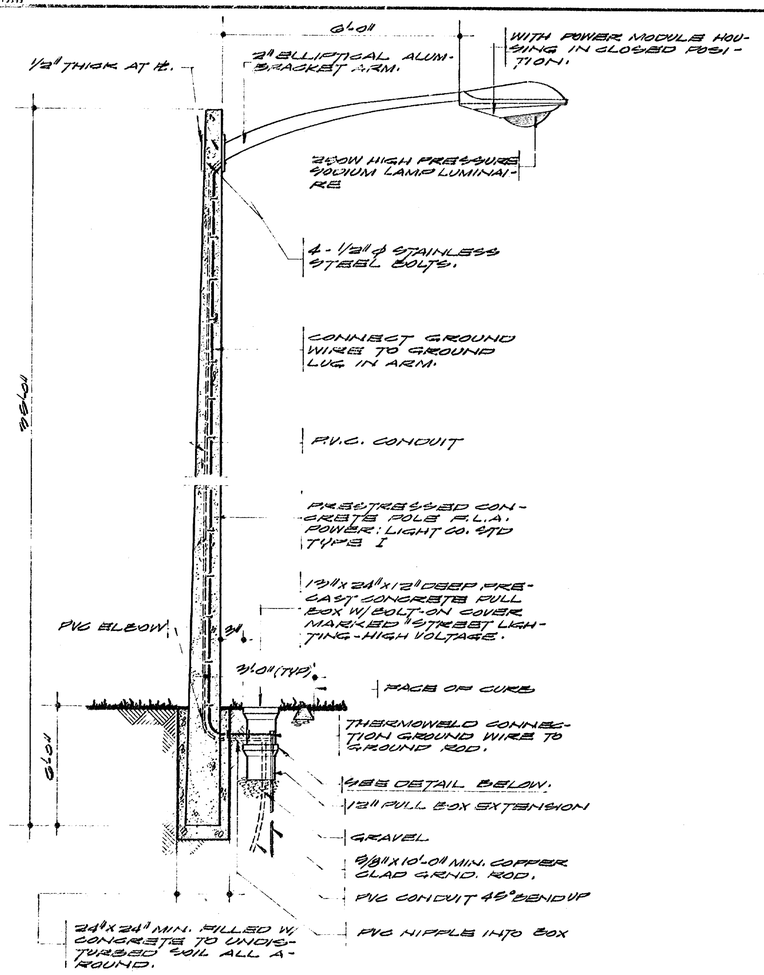

STREET LIGHTING POLE (TYPE (AA))

N.T.S.

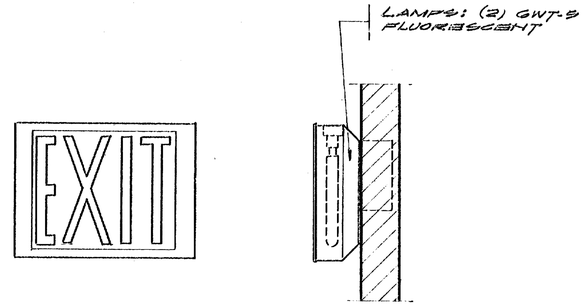

MOUNTING DETAIL FIXTURE TYPE (X)

N.T.S

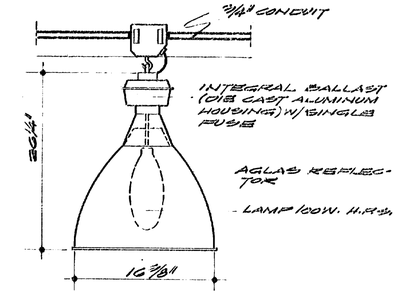

MOUNTING DETAIL FIXTURE TYPE (O)

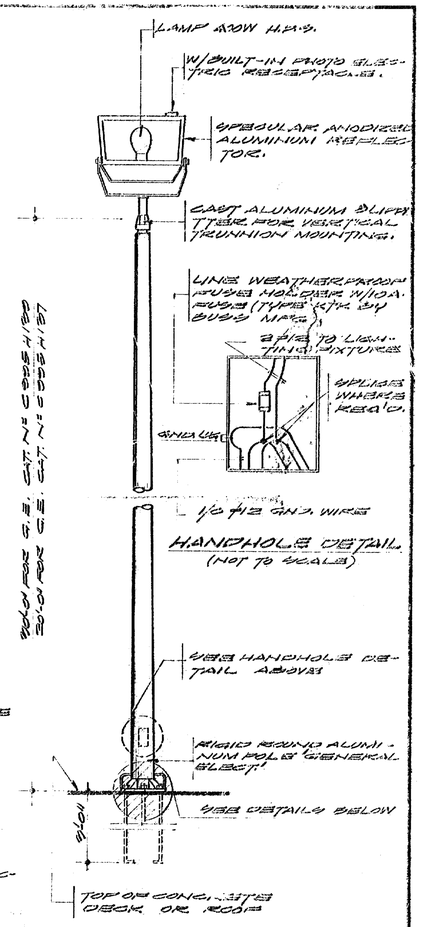

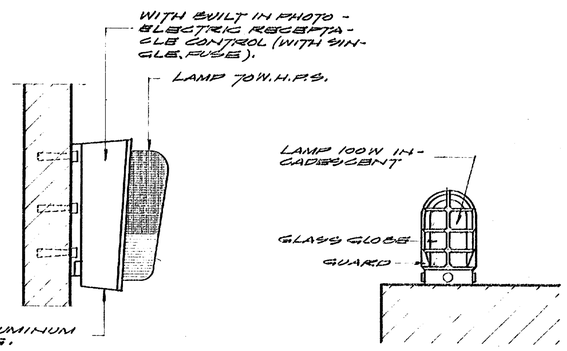

MOUNTING DETAIL FIXTURE TYPE (Q)

MOUNTING DETAIL FIXTURE TYPE (P)

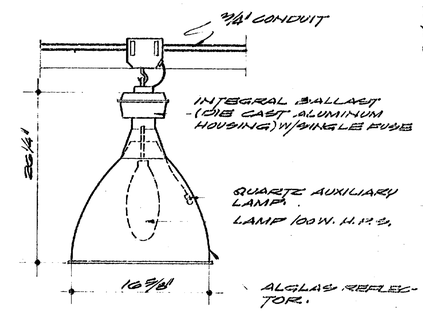

MOUNTING DETAIL FIXTURE TYPE (N)

FIXTURE TYPES (S) (R)

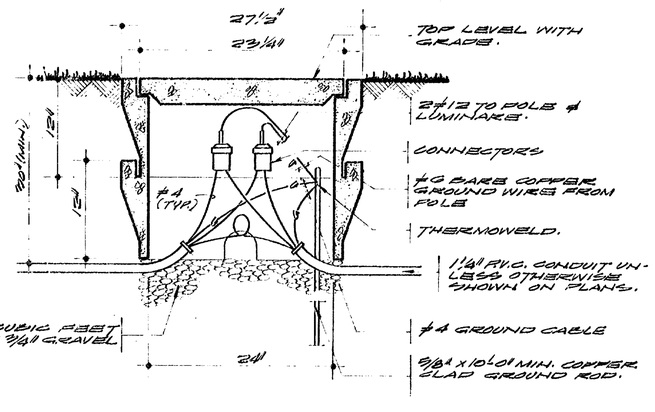

SECTION THRU PULL BOX

SCALE: 1-1/2" = 1'-0"

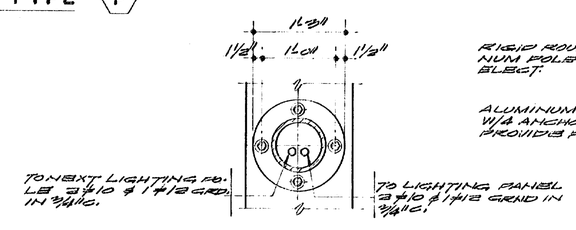

SECTION "A"

(NOT TO SCALE)

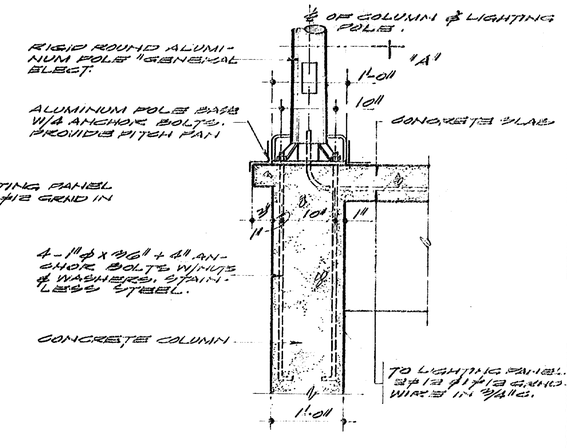

MOUNTING DETAILS

N.T.S.

LUMINAIRE SCHEDULE

TYPE	DESCRIPTION	LAMPS	VOLTAGE	MANUFACT.	CATALOG
(O)	SUSPENDED INDUSTRIAL FIXTURES.	100W H.P.S.	277V.	GENERAL ELECTRIC	E 2410 SVG
(N)	SUSPENDED INDUSTRIAL FIXTURES	100W H.P.S.	277V.	GENERAL ELECTRIC	E 2410 SVG
(P)	VAPORTIGHT FIXTURE	100 W. INCAN.	120V.	CROUSE-HINDS	VXHA 2250
(R)	FLOODLIGHT ON 20' POLE	400W H.P.S. LU-400 SD	277V	GENERAL ELECTRIC	C936-G 607
(S)	FLOODLIGHT ON 30' POLE	400W H.P.S. LU-400 SD	277V.	GENERAL ELECTRIC	C936-G607
(X)	EXIT LIGHT FLAT WALL MOUNTED	(2) GW-T-9 FLUOR L.		NO. PHILBEN	50W-GPM
(Q)	WALLIGHTER FIXTURE	70W H.P.S. VAPOR LIGHT RE-1781.	277V.	GENERAL ELECTRIC	C5823 N 503
(AA)	STREET LUMINAIRE MEDIUM-SEMI-CUT OFF TYPE	250VHPS	480V	GENERAL ELECTRIC	C734 G707 W/PHOTOELEC. CELL.
⬡					
⬡					

NO.	DATE	ISSUED FOR	BY

DESIGNED JLA
DRAWN MAC
CHECKED
APPROVED

LOUIS J. AGUIRRE AND ASSOCIATES
CONSULTING ENGINEERS
CORAL GABLES FLORIDA
P.E.

POST, BUCKLEY, SCHUH & JERNIGAN INC.
CONSULTING ENGINEERS & PLANNERS
HAZEN AND SAWYER, P.C.
CONSULTING ENGINEERS
MIAMI 078-001 3940

A JOINT VENTURE

MIAMI-DADE WATER AND SEWER AUTHORITY
UPGRADING OF EXISTING CENTRAL DISTRICT WASTEWATER TREATMENT PLANT
VIRGINIA KEY, DADE COUNTY, FLORIDA

ELECTRICAL
LUMINAIRE SCHEDULE AND DETAILS

CONTRACT NUMBER(S) S-283
EPA C120429130
DATE MAR 15 1984

DWG. E-32
SHEET 74 OF 74
REF. NO. 3-7840-A

AF 193

SHEET NO.	DWG. NO.	REF. NO.	DESCRIPTION
GENERAL			
1	G-1	S-7691-A	COVER SHEET
2	G-2	S-7692-A	INDEX OF DRAWINGS, AND GENERAL NOTES
CIVIL			
3	C-1	S-7693-A	PROJECT LIMITS, GENERAL ARRANGEMENT AND BORING LOCATIONS
4	C-2	S-7694-A	PAVING, GRADING AND DRAINAGE PLAN
MECHANICAL			
5	M-2	S-7697-A	YARD PIPING, KEY PLAN, LEGEND AND DETAILS
6	M-4	S-7699-A	YARD PIPING, AREA 2
7	M-5	S-7700-A	YARD PIPING, AREA 3
8	M-6	S-7701-A	YARD PIPING, AREA 4
9	M-8	S-7703-A	YARD PIPING, PROFILES & DETAILS
10	M-10	S-7705-A	TEMPORARY PIPING RECLOCTIONS & FINAL TANKS BY-PASS REMOVAL
11			NOT ASSIGNED
12	M-36	S-7731-A	FINAL SETTLING TANKS, EXISTING SLUDGE PUMP STATION NO. 2 MODIFICATIONS, SECTIONAL PLAN
13	M-37	S-7732-A	NOT IN CONTRACT
14	M-38	S-7733-A	FINAL SETTLING TANKS, PROPOSED SLUDGE PUMP STATION NO. 4 AND INFLUENT END, DECK PLAN
15	M-39	S-7734-A	FINAL SETTLING TANKS, PROPOSED SLUDGE PUMP STATION NO. 4 AND INFLUENT END, SECTIONAL PLAN
16	M-40	S-7735-A	FINAL SETTLING TANKS, PROPOSED SLUDGE PUMP STATION , NO. 4, SECTIONS
17	M-41	S-7736-A	FINAL SETTLING TANKS, PUMP STATION DETAILS
18	M-42	S-7737-A	FINAL SETTLING TANKS, CROSS COLLECTOR SECTION, LONGITUDINAL TANK SECTION
19	M-43	S-7738-A	FINAL SETTLING TANKS, CROSS SECTIONS
20	M-45	S-7740-A	FINAL SETTLING TANKS, SCUM PUMPING STATION MODIFICATIONS PLAN & SECTION
21	M-47	S-7742-A	FINAL SETTLING TANKS, EFFLUENT CHANNEL, TANKS NO. 6 AND 8 PLAN AND SECTIONS
22	M-48	S-7743-A	SERVICE TUNNEL "C" PLAN & SECTIONS
23	M-49	S-7744-A	CHLORINATION BUILDING, EXISTING ITEMS FOR REMOVAL
24	M-50	S-7745-A	CHLORINATION BUILDING MODIFICATIONS, PLAN AND SECTIONS
25			NOT ASSIGNED
26	M-52	S-7747-A	AIR DIFFUSER EQUIPMENT, DETAILS
27	M-53	S-7748-A	MISCELLANEOUS DETAILS
STRUCTURAL			
1 27A	S-6	S-7754-A	STRUCTURAL NOTES AND DETAILS
28	S-24	S-7772-A	AERATION TANKS, EFFLUENT CHANNEL ADDITION PLANS, SECTIONS AND DETAILS
29	S-25	S-7773-A	SCREENING FACILITIES, PLANS, SECTIONS AND DETAILS
30	S-26	S-7774-A	FINAL SETTLING TANKS, GENERAL PLAN
31	S-27	S-7775-A	FINAL SETTLING TANKS, FOUNDATION PLAN AND PILE PLAN, SHEET 1
32	S-29	S-7777-A	FINAL SETTLING TANKS, ENLARGED PILE PLAN SLUDGE PUMP STATION AND INFLUENT CHANNEL
33	S-30	S-7778-A	FINAL SETTLING TANKS, ENLARGED TOP PLAN SLUDGE PUMP STATION TO E
34	S-31	S-7779-A	FINAL SETTLING TANKS, ENLARGED TOP PLAN E TO H
35	S-32	S-7780-A	FINAL SETTLING TANKS, ENLARGED TOP PLAN H TO L
36	S-33	S-7781-A	FINAL SETTLING TANKS, ENLARGED TOP PLAN L TO R
37	S-35	S-7783-A	FINAL SETTLING TANKS, ENLARGED TOP PLAN R TO V TANKS NO. 6 AND 8
38	S-36	S-7784-A	FINAL SETTLING TANKS, LONGITUDINAL SECTION A TO M
39	S-37	S-7785-A	FINAL SETTLING TANKS, LONGITUDINAL SECTION M TO V
40	S-38	S-7786-A	FINAL SETTLING TANKS, CROSS SECTION INFLUENT END
41	S-39	S-7787-A	FINAL SETTLING TANKS, CROSS SECTION EFFLUENT END
42	S-40	S-7788-A	FINAL SETTLING TANKS, SECTIONS AND DETAILS, SHEET 1
43	S-41	S-7789-A	FINAL SETTLING TANKS, SECTIONS AND DETAILS, SHEET 2
44	S-42	S-7790-A	FINAL SETTLING TANKS, SECTIONS AND DETAILS, SHEET 3
45	S-43	S-7791-A	FINAL SETTLING TANKS, SLUDGE PUMP STATION NO. 4 ROOF FRAMING PLAN AND DETAILS
46	S-44	S-7792-A	FINAL SETTLING TANKS, SLUDGE PUMP STATION NO. 4 FLOOR SECTIONS
47	S-45	S-7793-A	FINAL SETTLING TANKS STANDARD AND TYPICAL DETAILS
48	S-46	S-7793-A	FINAL SETTLING TANKS, MISCELLANEOUS DETAILS
49	S-47	S-7795-A	STANDARD AND TYPICAL DETAILS SHEET 1
50	S-48	S-7796-A	STANDARD AND TYPICAL DETAILS SHEET 2
51	S-49	S-7797-A	PILING AND MISCELLANEOUS DETAILS
ARCHITECTURAL			
52	A-5	S-7802-A	FINAL SETTLING TANKS, SLUDGE PUMP STATION NO. 4 PLANS AND SCHEDULES
53	A-6	S-7803-A	FINAL SETTLING TANKS, SLUDGE PUMP STATION NO. 4 ELEVATIONS
54	A-7	S-7804-A	FINAL SETTLING TANKS, SLUDGE PUMP STATION NO. 4 SECTIONS
1 55			NOT ASSIGNED
56	A-9	S-7806-A	FINAL SETTLING TANKS, SLUDGE PUMP SCHEDULES AND DETAILS
1 57			NOT ASSIGNED
58	A-11	S-7808-A	FINAL SETTLING TANKS, WIER LOCATION PLAN, SCHEDULE AND DETAILS
ELECTRICAL			
59	E-1	S-7809-A	ELECTRICAL LEGEND - PLANS
60	E-2	S-7810-A	ONE LINE AND WIRING DIAGRAM LEGEND
1 61	E-3	S-7811-A	DUCT BANK AND MANHOLE DETAIL
1 62	E-4	S-7812-A	SITE PLAN. NO. 1
1 63	E-5	S-7813-A	SITE PLAN NO. 2
64	E-7	S-7815-A	FINAL SETTLING TANK DETAILS
65	E-17	S-7825-A	FINAL SETTLING TANKS, POWER PLAN
66	E-18	S-7826-A	FINAL SETTLING TANKS, LIGHTING PLAN
67	E-20	S-7828-A	FINAL SETTLING TANKS, PARTIAL DECK AND SCUM TROUGH PLAN
68	E-21	S-7829-A	FINAL SETTLING TANKS, NEW SLUDGE PUMPING STATION UPPER LEVEL - POWER & LIGHTING
69	E-22	S-7830-A	FINAL SETTLING TANKS, NEW SLUDGE PUMPING STATION LOWER LEVEL - POWER & LIGHTING
70	E-24	S-7832-A	CHLORINATION BUILDING MODIFICATIONS
1 71	E-28	S-7836-A	MOTOR CONTROL CENTER DIAGRAMS
72	E-29	S-7837-A	SCHEMATIC CONTROL DIAGRAMS AND DETAILS
73	E-30	S-7838-A	SCHEMATIC CONTROL DIAGRAMS AND DETAILS
74	E-32	S-7840-A	LUMINAIRE SCHEDULE AND DETAILS

GENERAL NOTES

1. ELEVATIONS ARE BASED ON A LOCAL PROJECT DATUM A CONSTRUCTION BENCH MARK SHALL BE ESTABLISHED AT THE EAST END OF THE FINAL SETTLING TANKS. SEE SHEET C-1 FOR DETAILS.
2. DESIGN OF THE PROPOSED FACILITIES HAS BEEN BASED ON THE MOST RELIABLE INFORMATION AVAILABLE TO THE ENGINEER. THE INFORMATION CONCERNING TYPE AND LOCATION OF EXISTING PIPING, EQUIPMENT, STRUCTURES, ETC., IS NOT GURANTEED TO BE COMPLETELY ACCURATE OR ALL INCLUSIVE. THE CONTRACTOR SHALL BE RESPONSIBLE FOR MAKING FIELD VERIFICATIONS OF ALL PERTINENT INFORMATION PRIOR TO COMMENCEMENT OF WORK.
3. PORTIONS OF WORK REPRESENTED IN CONTRACT S-285 WILL REQUIRE COORDINATION WITH ADJACENT CONTRACTS S-284 SLUDGE FACILITIES' (DRAWINGS BY DAVID VOLKERT AND ASSOC.) AND S-279 CONVERSION OF DIGESTER GAS TO ELECTRICITY' (DRAWINGS BY GREENLEAF-TELESCA). SEE SPECIFICATIONS.
4. PROPOSED WORK IS GENERALLY REPRESENTED BY HEAVY BOLD LINEWORK. EXISTING FEATURES ARE REPRESENTED BY LIGHTER SUBDUED LINEWORK. FOR ADDITIONAL SYMBOLS AND MORE SPECIFIC LEGENDS CONSULT THE APPROPRIATE SHEETS LISTED BELOW.
5. FOR MECHANICAL NOTES AND LEGEND SEE SHEET M-2.
   FOR STRUCTURAL NOTES AND LEGEND SEE SHEET S-
   FOR ARCHITECTURAL NOTES AND LEGEND SEE SHEET A-
   FOR ELECTRICAL NOTES AND LEGEND SEE SHEET E-1

NO	DATE	ISSUED FOR	BY
1	DEC. 21, 1984	ADDENDUM NO. 2	

DESIGNED J.H.M./R.F.B.
DRAWN M.M.M.
CHECKED H.K.
APPROVED W.W.R

PE

POST, BUCKLEY, SCHUH & JERNIGAN INC.
CONSULTING ENGINEERS & PLANNERS
HAZEN AND SAWYER, P.C.
CONSULTING ENGINEERS
MIAMI
078-001 8940

A JOINT VENTURE

MIAMI-DADE WATER AND SEWER AUTHORITY

UPGRADING OF EXISTING CENTRAL DISTRICT WASTEWATER TREATMENT PLANT
VIRGINIA KEY, DADE COUNTY, FLORIDA

GENERAL

INDEX OF DRAWINGS AND GENERAL NOTES

CONTRACT NUMBER(S) S-285
EPA C120429130
DATE MARCH 15, 1984

DWG G-2
SHEET 2 OF 74
REF NO S-7692-A

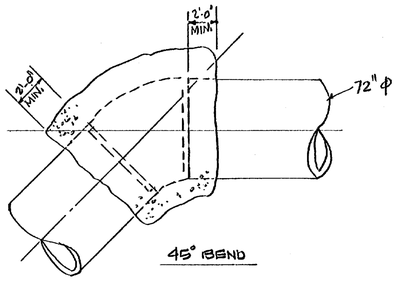

45° BEND

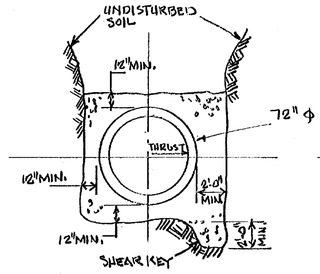

TYPICAL CROSS SECTION

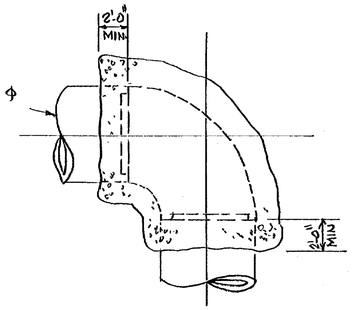

90° BEND

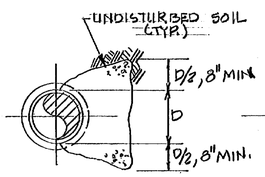

TYPICAL CROSS SECTION

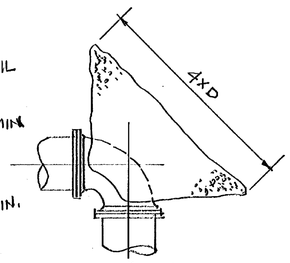

90° BEND

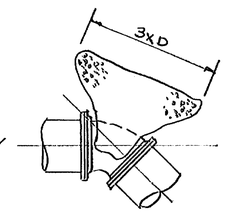

45° BEND

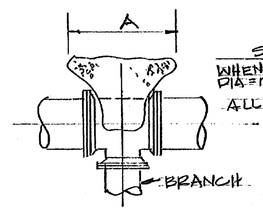

TEE

SIZE	A
WHEN BRANCH DIA = RUN DIA	4xD
ALL OTHER	3x BRANCH DIA

THRUST BLOCK DETAILS
NOT TO SCALE

NOTES

1.) ALL BURIED VALVES SHALL BE FURNISHED WITH EXTENSION OPERATORS AND VALVE BOXES PER DETAIL ON DWG. No. M-53 AND SPECIFICATIONS.
2.) SEE DWG C-2 FOR PAVING, GRADING AND DRAINAGE MODIFICATIONS
3.) CONTRACTOR SHALL FIELD VERIFY ALL PIPE LENGTHS REQ'D. FOR CONNECTIONS TO EXISTING PIPING PRIOR TO ORDERING.
4.) CONTRACTOR SHALL FURNISH ALL SLEEVES, GASKETS, AND APPURTENANCES AS REQUIRED TO MAKE CONNECTIONS INTO EXISTING PIPING.
5.) ALL BENDS SHALL HAVE RESTRAINED JOINTS AND THRUST BLOCKS.
6.) EXISTING ELECTRICAL LINES ARE INSTALLED AT A DEPTH OF 3'±. BELOW GRADE. SEE ELECTRICAL DWG. E-1 FOR LOCATIONS
7.) ALL INTERIOR MANUALLY OPERATED VALVES INSTALLED WITH CENTERLINE 6' ABOVE OPERATING LEVEL SHALL BE FURNISHED WITH CHAIN OPERATORS AS DESCRIBED IN SPECIFICATIONS.

LEGEND

———	PROPOSED PIPING (LESS THAN 20"ϕ)
═══	PROPOSED PIPING (MORE THAN 20"ϕ)
— — —	EXISTING PIPING
———	PROPOSED STRUCTURES AND FACILITIES
SC.D.	SCUM DISCHARGE
P.S.	PRIMARY SLUDGE
P.SC.	PRIMARY SCUM
W.W.	WASTE WATER
O.R.	OVERFLOW RETURN
R.S.	RETURN SLUDGE
W.S.	WASTE SLUDGE
SL.	SLUDGE
A	AIR
O_2	OXYGEN
H.P.W.	HIGH PRESSURE FLUSHING WATER
L.P.W.	LOW PRESSURE FLUSHING WATER
P.W.	POTABLE WATER
S.D.	STORM DRAIN
SAN.	SANITARY SEWER
H.W.R.	HOT WATER RETURN
H.W.S.	HOT WATER SUPPLY
D.G.	DIGESTER GAS
A.R.V.	AIR RELEASE VALVE
CL_2W	CHLORINE WATER
S.C.O.	SCRUBBER OVERFLOW
R.C.P.P.	REINFORCED CONCRETE PRESSURE PIPE
D.I.	DUCTILE IRON
C.I.	CAST IRON
STL.	STEEL, PLASTIC COATED PIPE
F.R.P.	FIBERGLASS REINFORCED PLASTIC
P.V.C.	POLYVINYL CHLORIDE
SAR.L.	SARAN LINED
G.S.	GALVANIZED STEEL
S.S.P.	STAINLESS STEEL PIPE

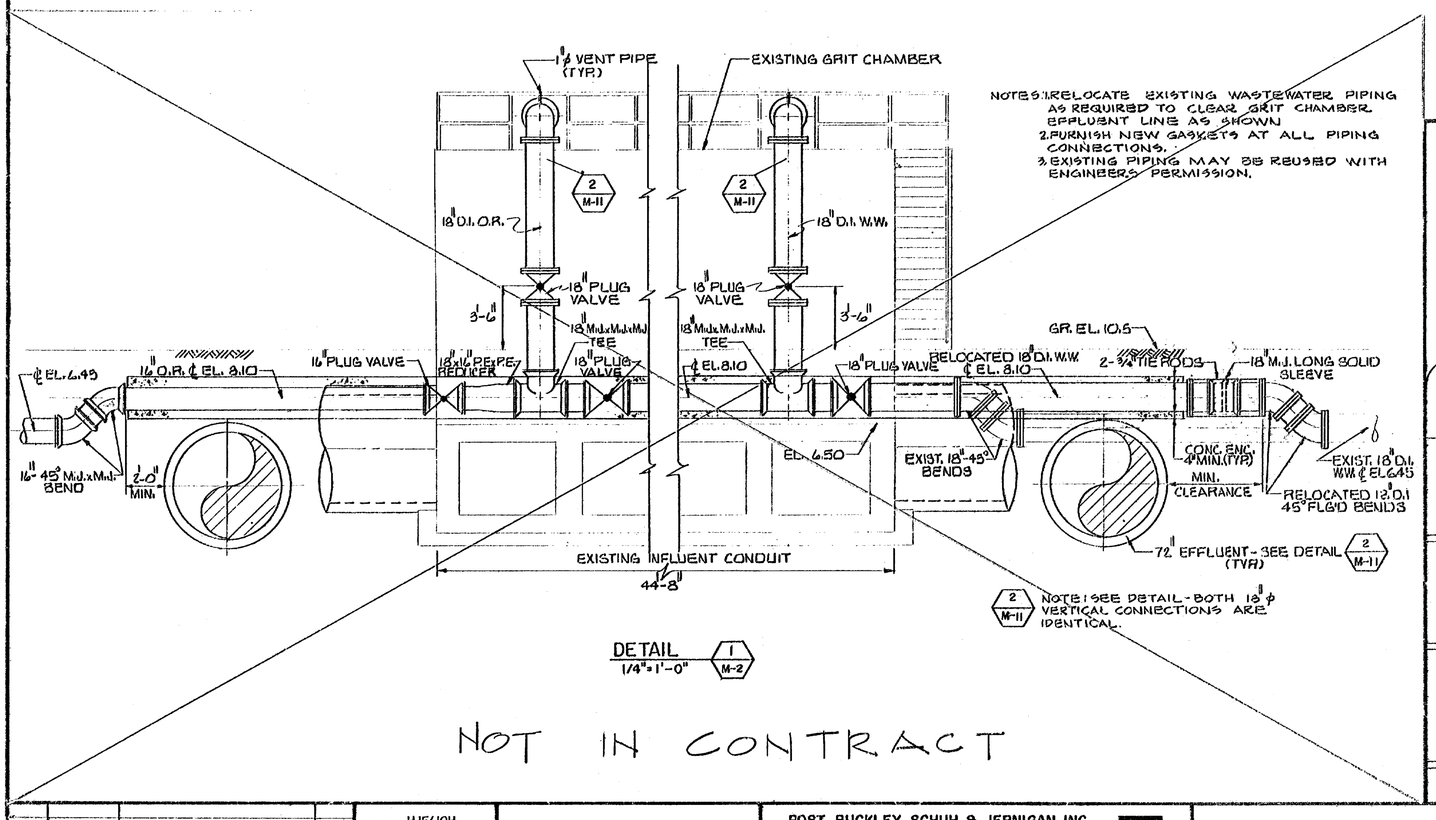

DETAIL 1 M-2
1/4" = 1'-0"

NOT IN CONTRACT

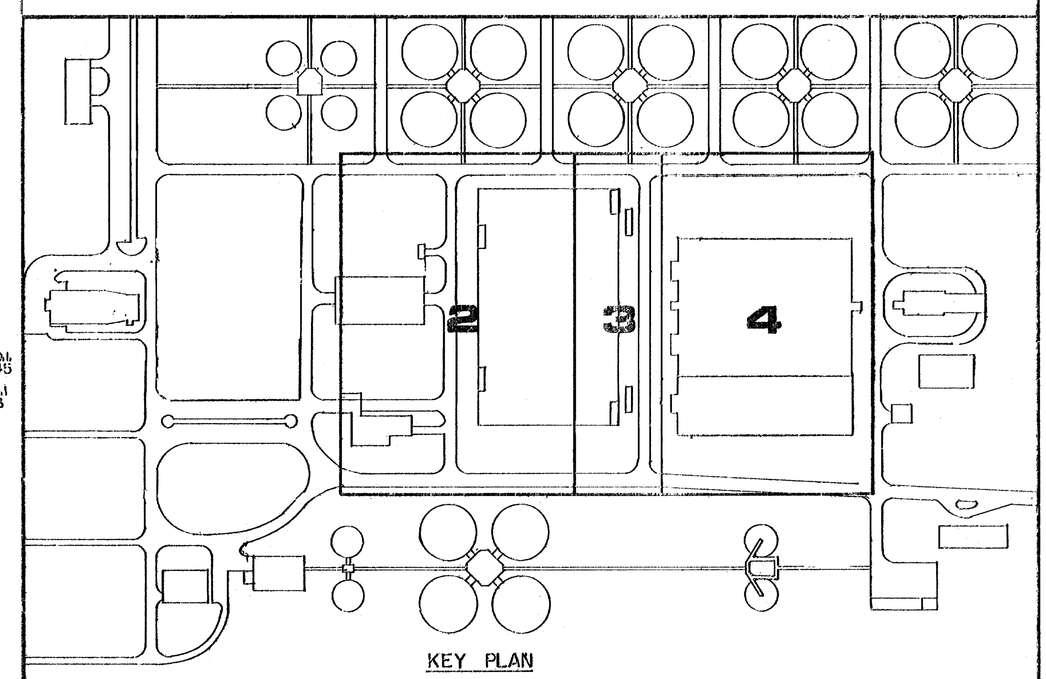

KEY PLAN

NO.	DATE	ISSUED FOR	BY

DESIGNED HJF/JOH
DRAWN J.M.F.
CHECKED H.J.F.
APPROVED J.N.R.

P.E.

POST, BUCKLEY, SCHUH & JERNIGAN INC.
CONSULTING ENGINEERS & PLANNERS
HAZEN AND SAWYER, P.C.
CONSULTING ENGINEERS
MIAMI

078-001 8940

MIAMI-DADE WATER AND SEWER AUTHORITY

UPGRADING OF EXISTING CENTRAL DISTRICT WASTEWATER TREATMENT PLANT
VIRGINIA KEY, DADE COUNTY, FLORIDA

MECHANICAL
YARD PIPING
KEY PLAN, LEGEND AND DETAILS

CONTRACT NUMBER(S) S-285
EPA C120429130
DATE MAR. 15, 1984

DWG. M-2
SHEET 5 OF 74
REF. NO. S-7697-A

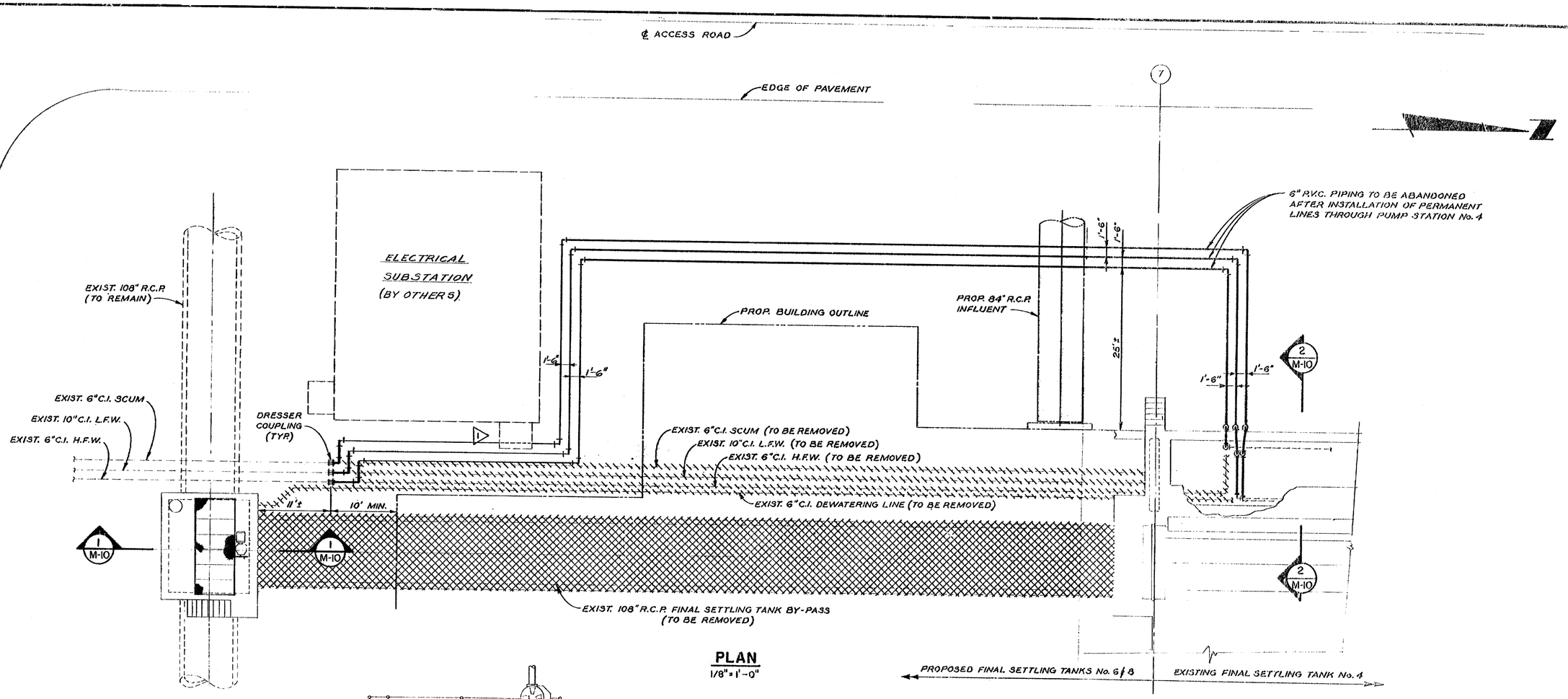

PLAN
1/8" = 1'-0"

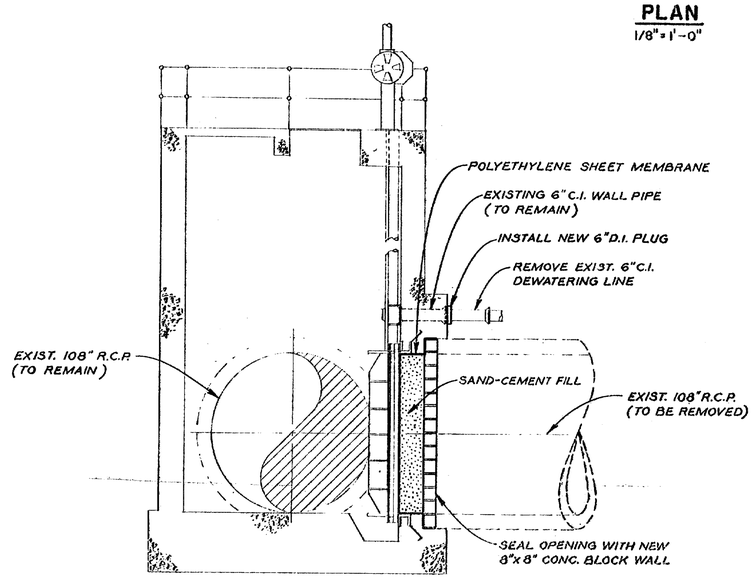

SECTION 1 M-10
1/4" = 1'-0"

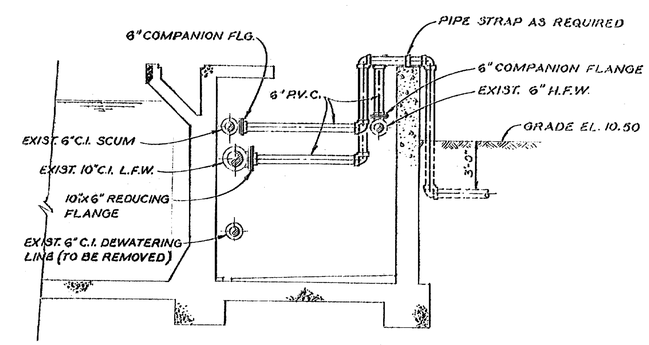

SECTION 2 M-10
1/4" = 1'-0"

NO.	DATE	ISSUED FOR	BY
1	DEC. 21, 1984	ADDENDUM No. 2	

DESIGNED J.H.M./R.F.B.
DRAWN M.Y.
CHECKED H.K.
APPROVED W.W.R.

M.Y.
P.E.

POST, BUCKLEY, SCHUH & JERNIGAN INC.
CONSULTING ENGINEERS & PLANNERS
HAZEN AND SAWYER, P.C.
CONSULTING ENGINEERS
MIAMI 079-001 6940

MIAMI-DADE WATER AND SEWER AUTHORITY

UPGRADING OF EXISTING CENTRAL DISTRICT WASTEWATER TREATMENT PLANT
VIRGINIA KEY, DADE COUNTY, FLORIDA

MECHANICAL

TEMPORARY PIPING RELOCATIONS AND FINAL TANK BY-PASS REMOVAL

CONTRACT NUMBER(S) S-285
EPA C120429130
DATE MARCH 15, 1984

DWG. M-10
SHEET 10 OF 74
REF. NO. S-7705-A

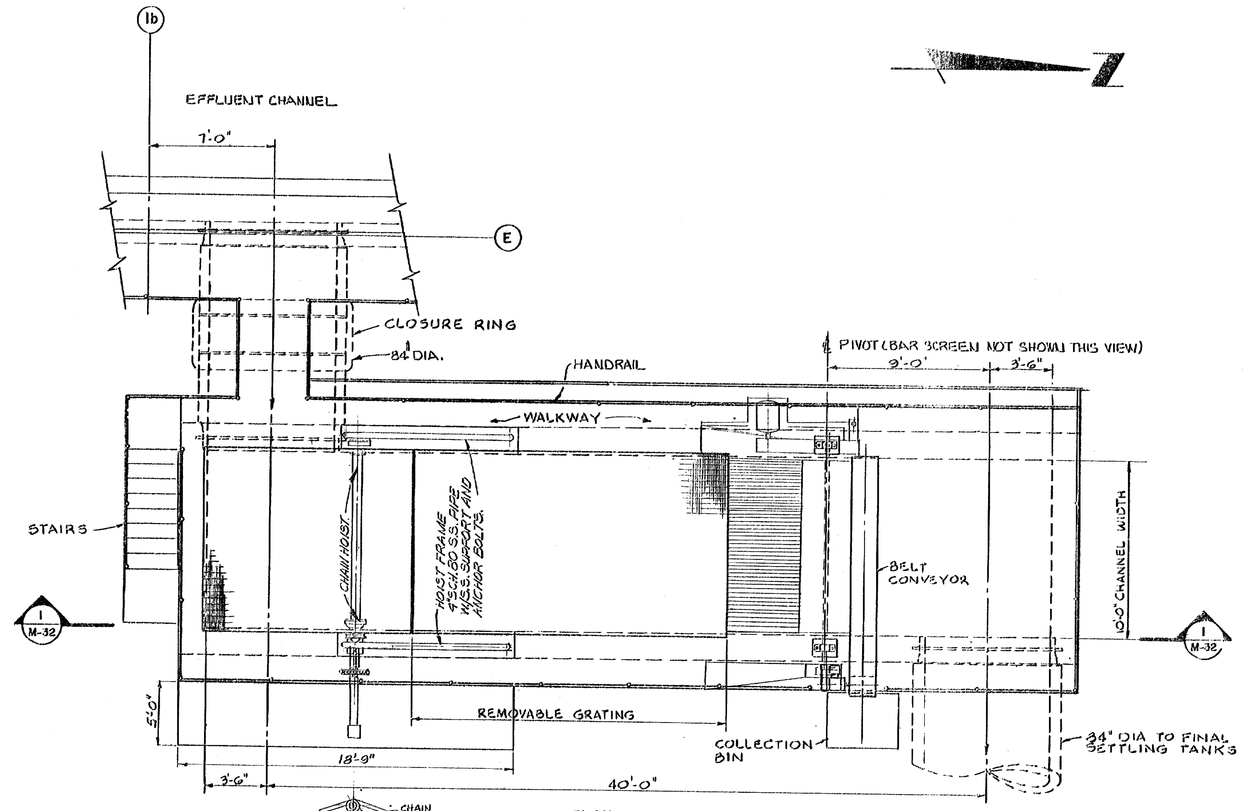

PLAN

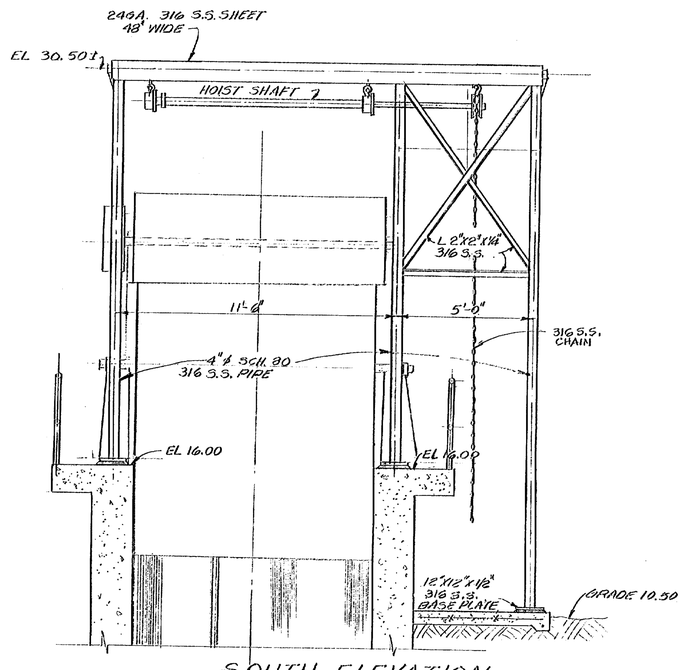

SOUTH ELEVATION
3/8"=1'-0"

DETAIL 2 / M-5
1/4"=1'-0"

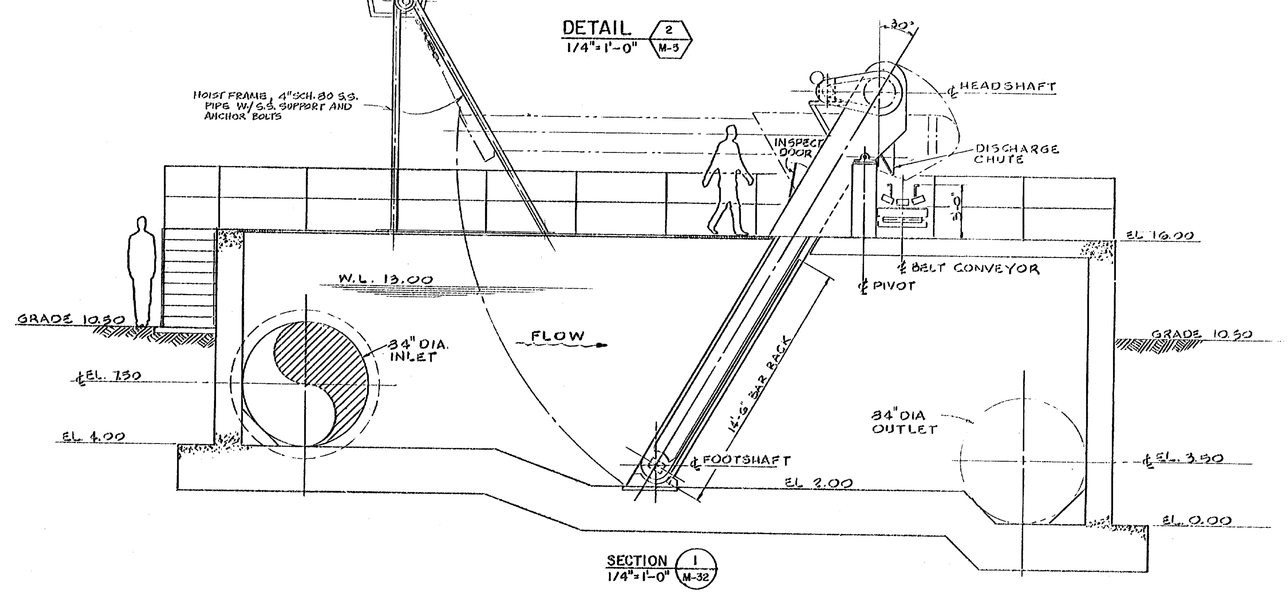

SECTION 1 / M-32
1/4"=1'-0"

NO.	DATE	ISSUED FOR	BY

DESIGNED HJF/JOH
DRAWN J.M.F.
CHECKED H.J.F.
APPROVED J.N.R.

P.E.

POST, BUCKLEY, SCHUH & JERNIGAN INC.
CONSULTING ENGINEERS & PLANNERS
HAZEN AND SAWYER, P.C.
CONSULTING ENGINEERS
MIAMI 078-001 8940

A JOINT VENTURE

MIAMI-DADE WATER AND SEWER AUTHORITY

UPGRADING OF EXISTING CENTRAL DISTRICT WASTEWATER TREATMENT PLANT
VIRGINIA KEY, DADE COUNTY, FLORIDA

MECHANICAL
SCREENING FACILITIES
PLAN AND SECTION

CONTRACT NUMBER(S) S-285
EPA C120429130
DATE MAR. 15, 1984

DWG. M-32
SHEET 11 OF 74
REF. NO. S-7727-A

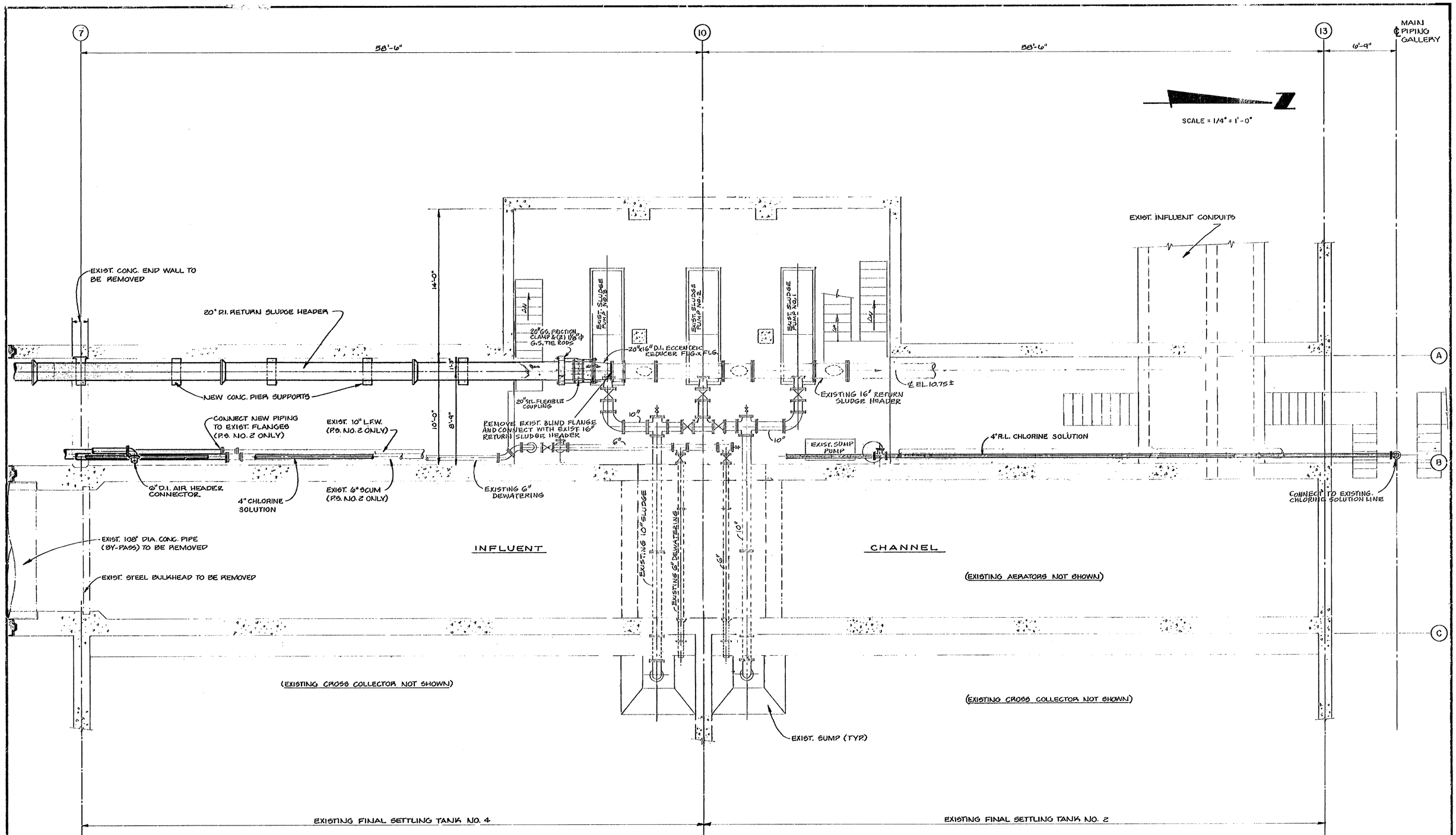

FOR OVERALL PLAN OF FINAL TANKS SEE DRAWING M-6

NO.	DATE	ISSUED FOR	BY

DESIGNED J.H.M./R.F.B.
DRAWN J.J.B./L.W.W.
CHECKED H.K.
APPROVED W.W.R.

P.E.

POST, BUCKLEY, SCHUH & JERNIGAN INC.
CONSULTING ENGINEERS & PLANNERS
HAZEN AND SAWYER, P.C.
CONSULTING ENGINEERS
A JOINT VENTURE
MIAMI 078-001 8940

MIAMI-DADE WATER AND SEWER AUTHORITY

UPGRADING OF EXISTING CENTRAL DISTRICT WASTEWATER TREATMENT PLANT
VIRGINIA KEY, DADE COUNTY, FLORIDA

MECHANICAL
FINAL SETTLING TANKS
EXISTING SLUDGE PUMP STATION
NO. 2 MODIFICATIONS
SECTIONAL PLAN

CONTRACT NUMBER(S) S-285
EPA C120429130
DATE MARCH 15, 1984

DWG. M-36
SHEET 12 OF 74
REF. NO. S-7731-A

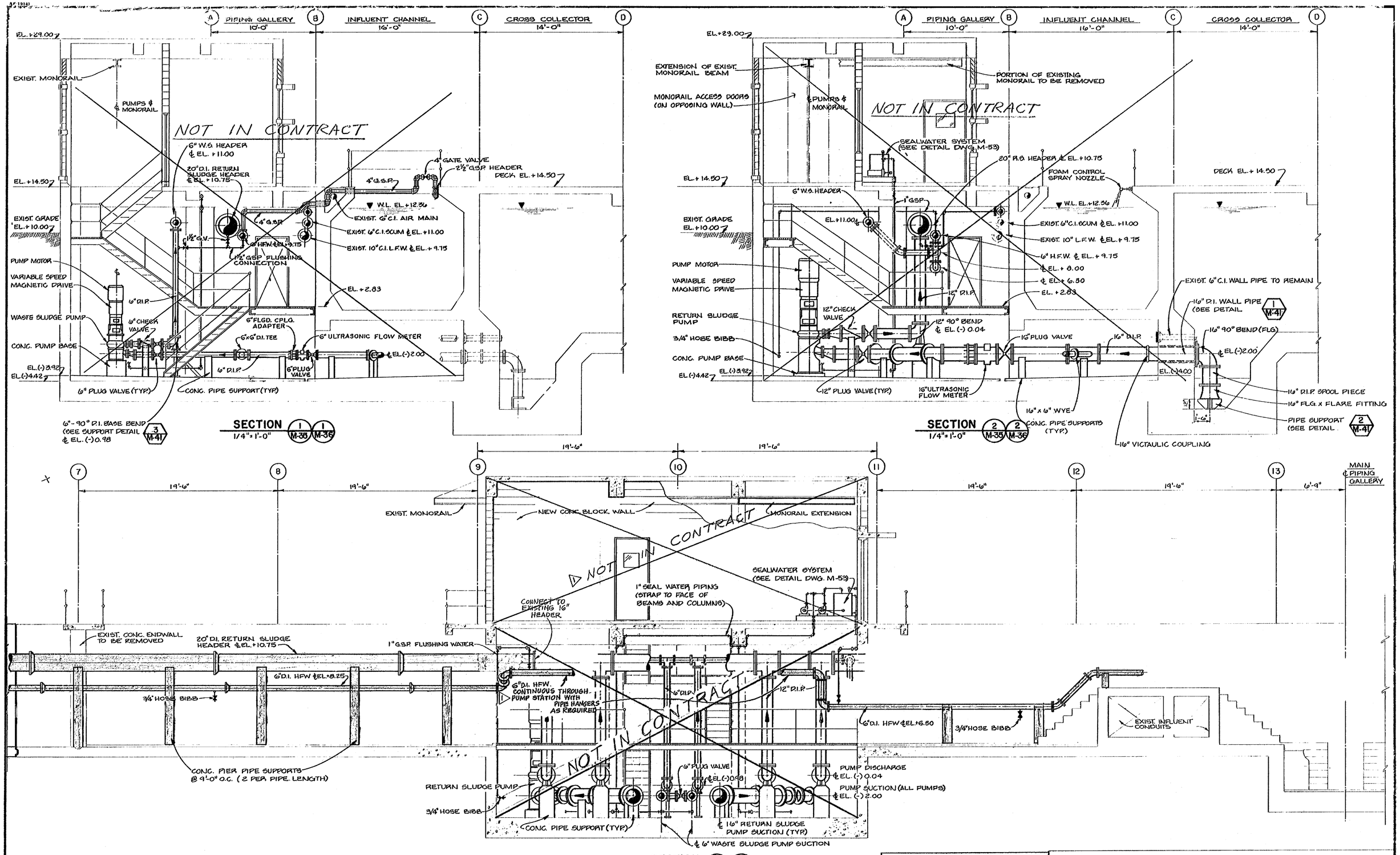

FOR OVERALL PLAN OF FINAL TANKS SEE DRAWING M-6

NO.	DATE	ISSUED FOR	BY
1	DEC. 21, 1984	ADDENDUM NO. 2	

DESIGNED J.H.M./R.F.B.
DRAWN M.M.M.
CHECKED H.K.
APPROVED W.W.R.

P.E.

POST; BUCKLEY, SCHUH & JERNIGAN INC.
CONSULTING ENGINEERS & PLANNERS
HAZEN AND SAWYER, P.C.
CONSULTING ENGINEERS
MIAMI
078-001 8940

MIAMI-DADE WATER AND SEWER AUTHORITY

UPGRADING OF EXISTING CENTRAL DISTRICT WASTEWATER TREATMENT PLANT
VIRGINIA KEY, DADE COUNTY, FLORIDA

MECHANICAL
FINAL SETTLING TANKS
EXISTING SLUDGE PUMP STATION
NO. 2 MODIFICATION
SECTIONS

CONTRACT NUMBER(S) S-285
EPA C120429130
DATE MARCH 15, 1984

DWG. M-37
SHEET 13 OF 74
REF. NO. S-7732-A

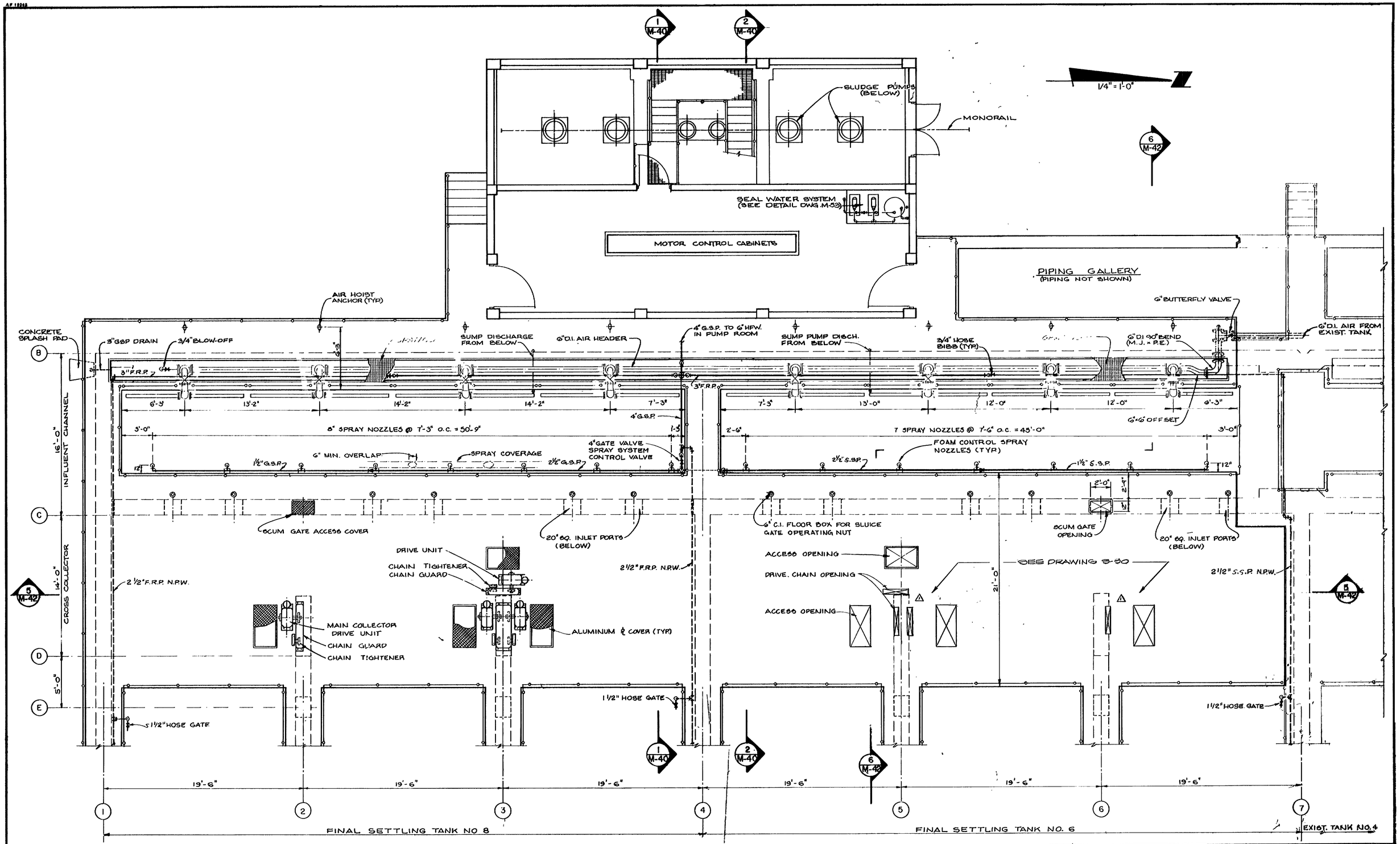

FOR OVERALL PLAN OF FINAL TANKS SEE DRAWING M-6

NO.	DATE	ISSUED FOR	BY
1	AUG 21, 1986	Revised to allow Interchangeability of Equipment & Collector Parts.	A.V.

DESIGNED J.H.M./R.F.B.
DRAWN L.W.W./A.Q.
CHECKED H.K.
APPROVED W.W.R.

P.E.

POST, BUCKLEY, SCHUH & JERNIGAN INC.
CONSULTING ENGINEERS & PLANNERS
HAZEN AND SAWYER, P.C.
CONSULTING ENGINEERS
MIAMI 078-001 6940

MIAMI-DADE WATER AND SEWER AUTHORITY

UPGRADING OF EXISTING CENTRAL DISTRICT WASTEWATER TREATMENT PLANT
VIRGINIA KEY, DADE COUNTY, FLORIDA

MECHANICAL
FINAL SETTLING TANKS
PROPOSED SLUDGE PUMP STATION NO. 4 AND INFLUENT END
DECK PLAN

CONTRACT NUMBER(S) S-285
EPA C120429130
DATE MARCH 15, 1984

DWG M-38
SHEET 14 OF 74
REF NO. S-7733 A

AF 13243

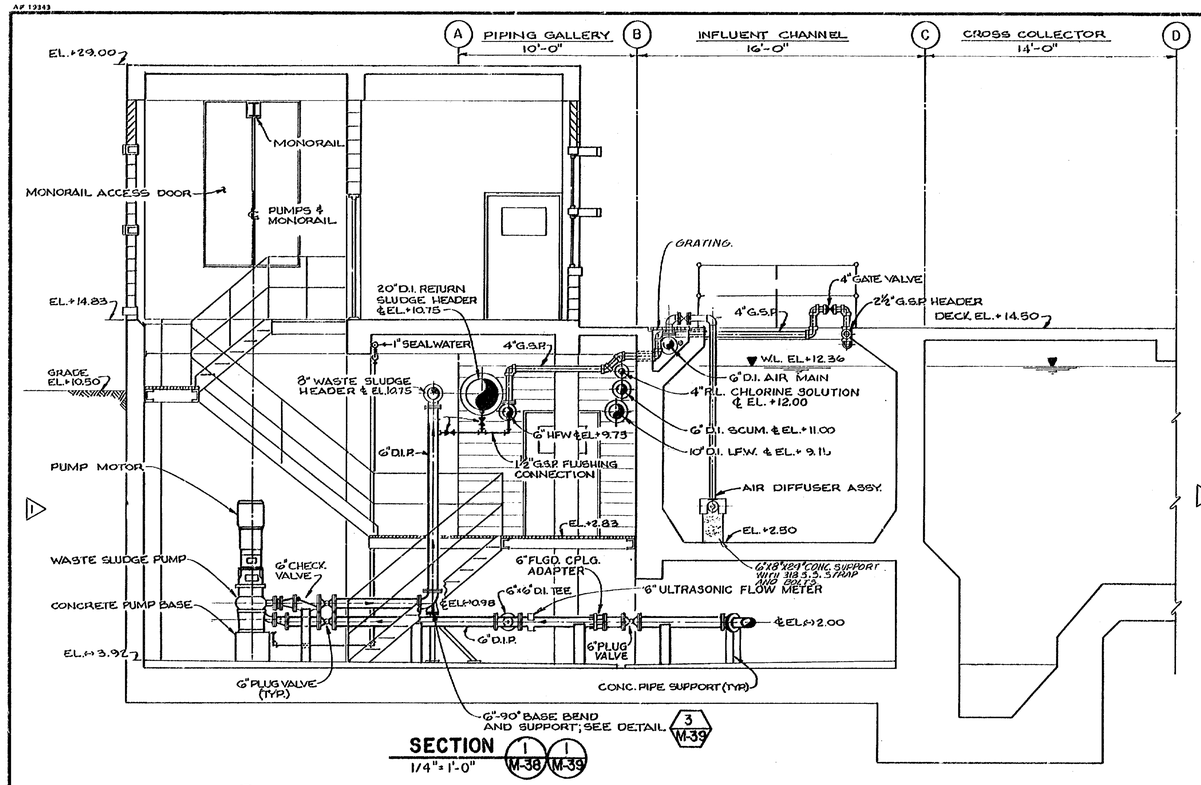

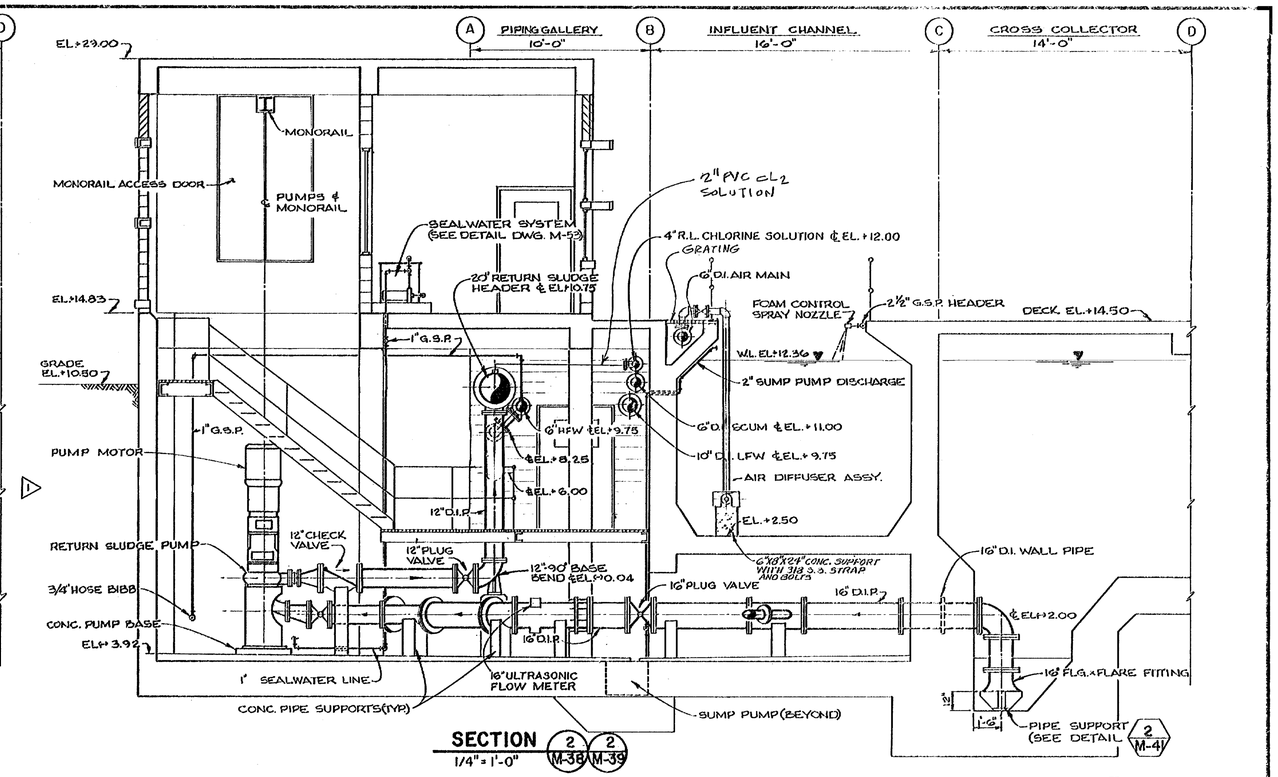

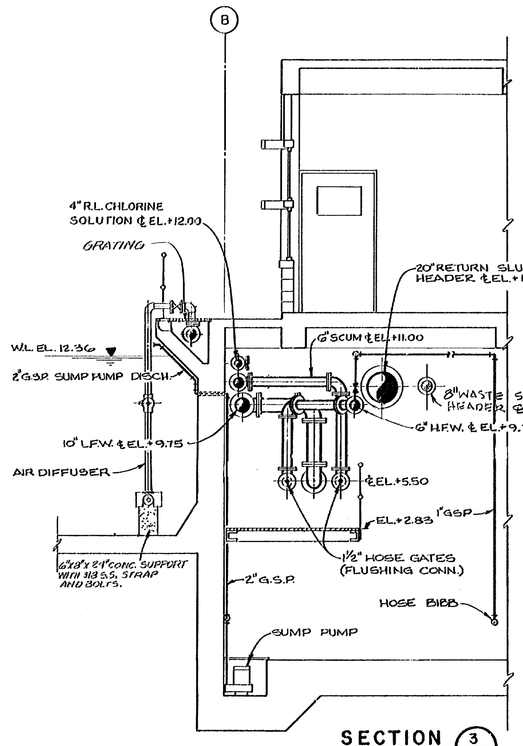

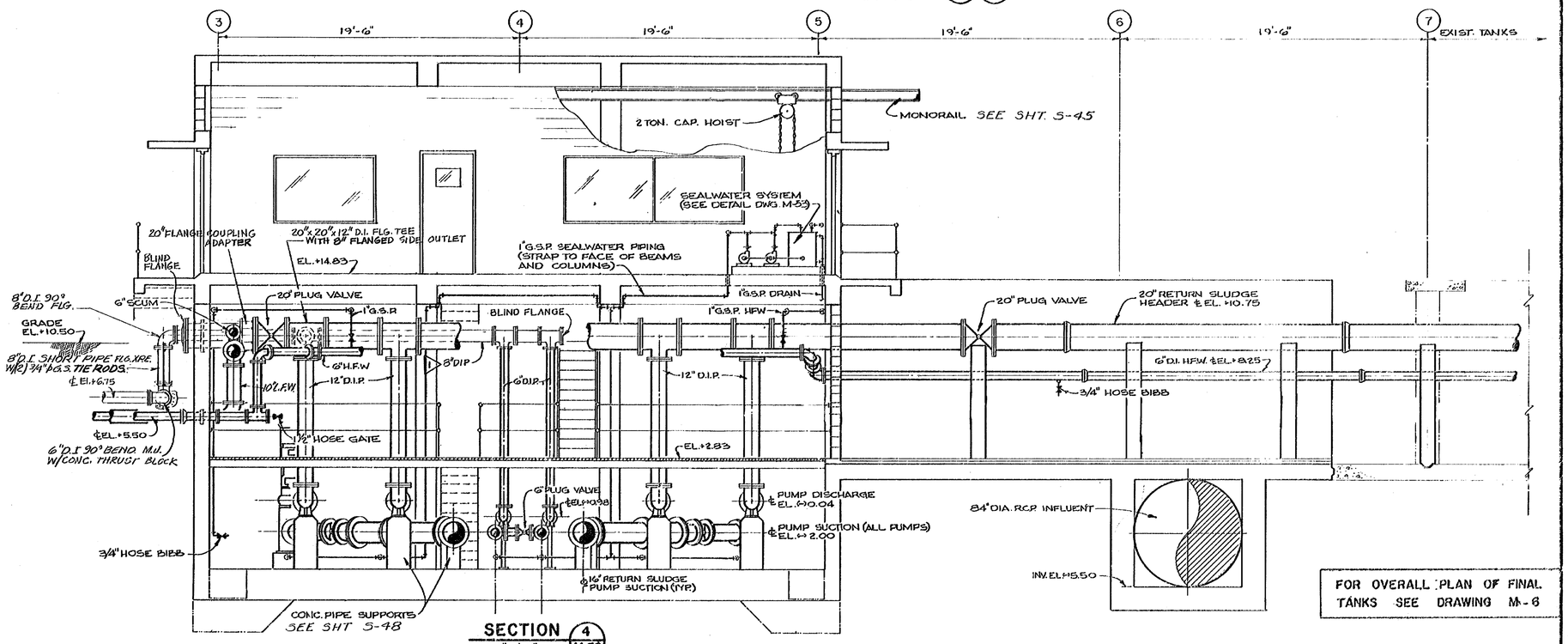

FOR OVERALL PLAN OF FINAL TANKS SEE DRAWING M-6

NO.	DATE	ISSUED FOR	BY
1	DEC. 21, 1984	ADDENDUM NO. 2	

DESIGNED J.H.M./R.F.B.
DRAWN L.W.W.
CHECKED H.K.
APPROVED W.W.R.
P.E.

POST, BUCKLEY, SCHUH & JERNIGAN INC.
CONSULTING ENGINEERS & PLANNERS
HAZEN AND SAWYER, P.C.
CONSULTING ENGINEERS
MIAMI 079-001 8940

MIAMI-DADE WATER AND SEWER AUTHORITY

UPGRADING OF EXISTING CENTRAL DISTRICT WASTEWATER TREATMENT PLANT
VIRGINIA KEY, DADE COUNTY, FLORIDA

MECHANICAL
FINAL SETTLING TANKS
PROPOSED SLUDGE PUMP STATION
NO. 4 SECTIONS

CONTRACT NUMBER(S) S-285
EPA C120429130
DATE MARCH 15, 1984

DWG. M-40
SHEET 16 OF 74
REF. NO. S-7735-A

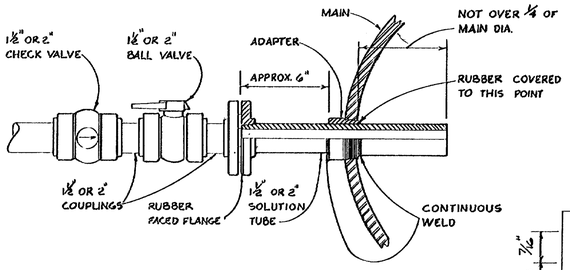

CHLORINE DIFFUSER DETAIL

N. T. S.

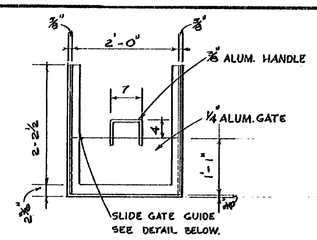

ELEVATION
3/4" = 1'-0"

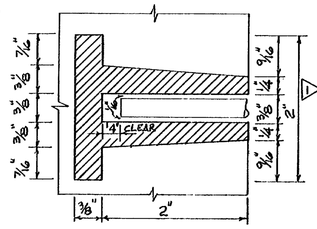

SCUM GATE GUIDE
FULL SIZE

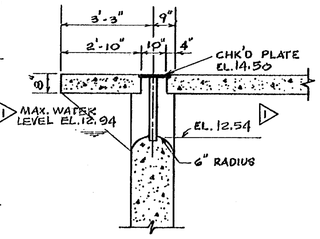

SECTION
3/8" = 1'-0"

SCUM GATE DETAIL

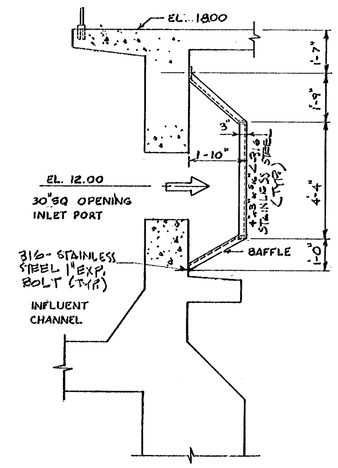

TYPICAL SECTION
3/8" = 1'-0"

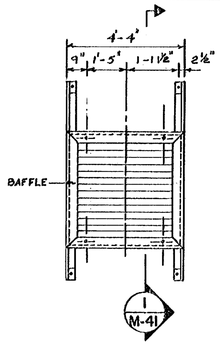

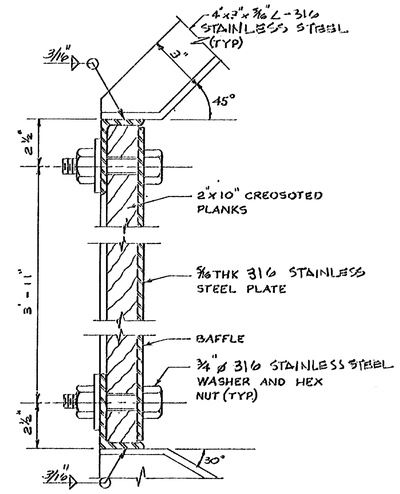

SECTION
3" = 1'-0"
1 M-41

FINAL SETTLING TANK INFLUENT BAFFLE

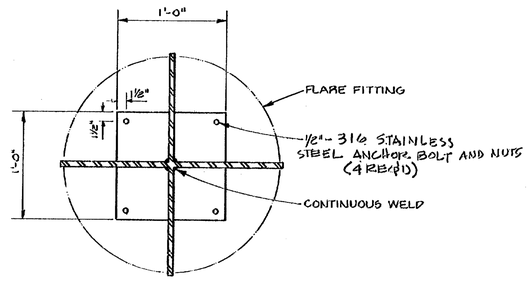

PLAN

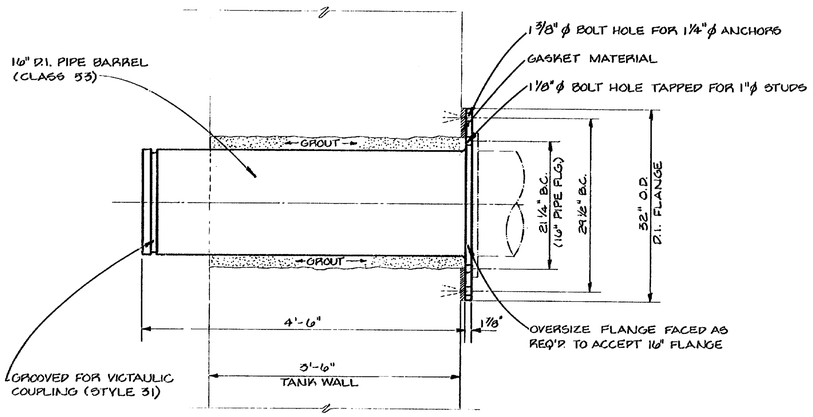

DETAIL
1" = 1'-0"
1 M-36 / 1 M-37

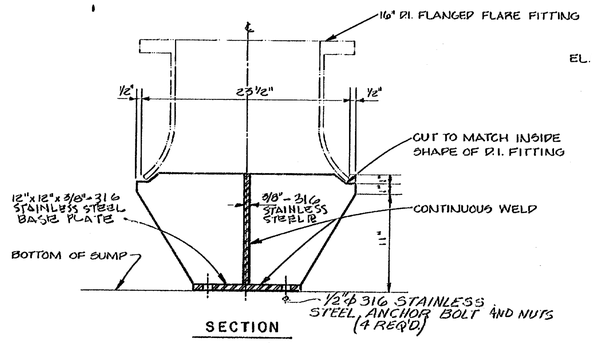

SECTION

DETAIL
1 1/2" = 1'-0"
2 M-37 / 2 M-40

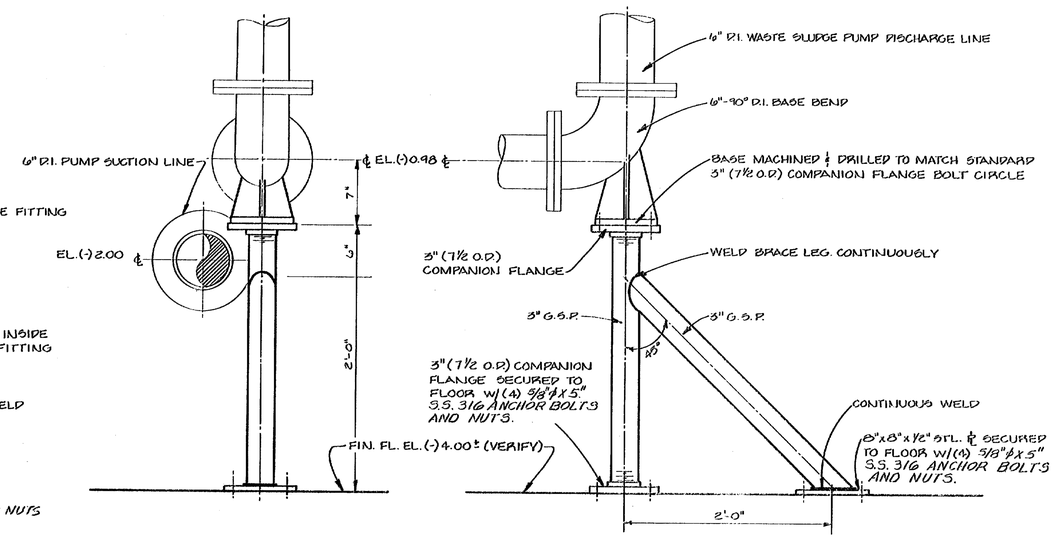

DETAIL
1 1/2" = 1'-0"
3 M-37 / 3 M-40

FOR OVERALL PLAN OF FINAL TANKS SEE DRAWING M-6

NO.	DATE	ISSUED FOR	BY
1	DEC. 21, 1984	ADDENDUM NO. 2	

DESIGNED J.H.M./R.F.B.
DRAWN M.M.M.
CHECKED H.K.
APPROVED W.W.R.

POST, BUCKLEY, SCHUH & JERNIGAN INC.
CONSULTING ENGINEERS & PLANNERS
HAZEN AND SAWYER, P.C.
CONSULTING ENGINEERS
MIAMI 078-001 8940

MIAMI-DADE WATER AND SEWER AUTHORITY

UPGRADING OF EXISTING CENTRAL DISTRICT WASTEWATER TREATMENT PLANT
VIRGINIA KEY, DADE COUNTY, FLORIDA

MECHANICAL
FINAL SETTLING TANKS
PUMP STATION DETAILS

CONTRACT NUMBER(S) S-285
EPA C120429130
DATE MARCH 15, 1984
CWO M-41
SHEET 17 OF 74
REF. NO. S-7736-A

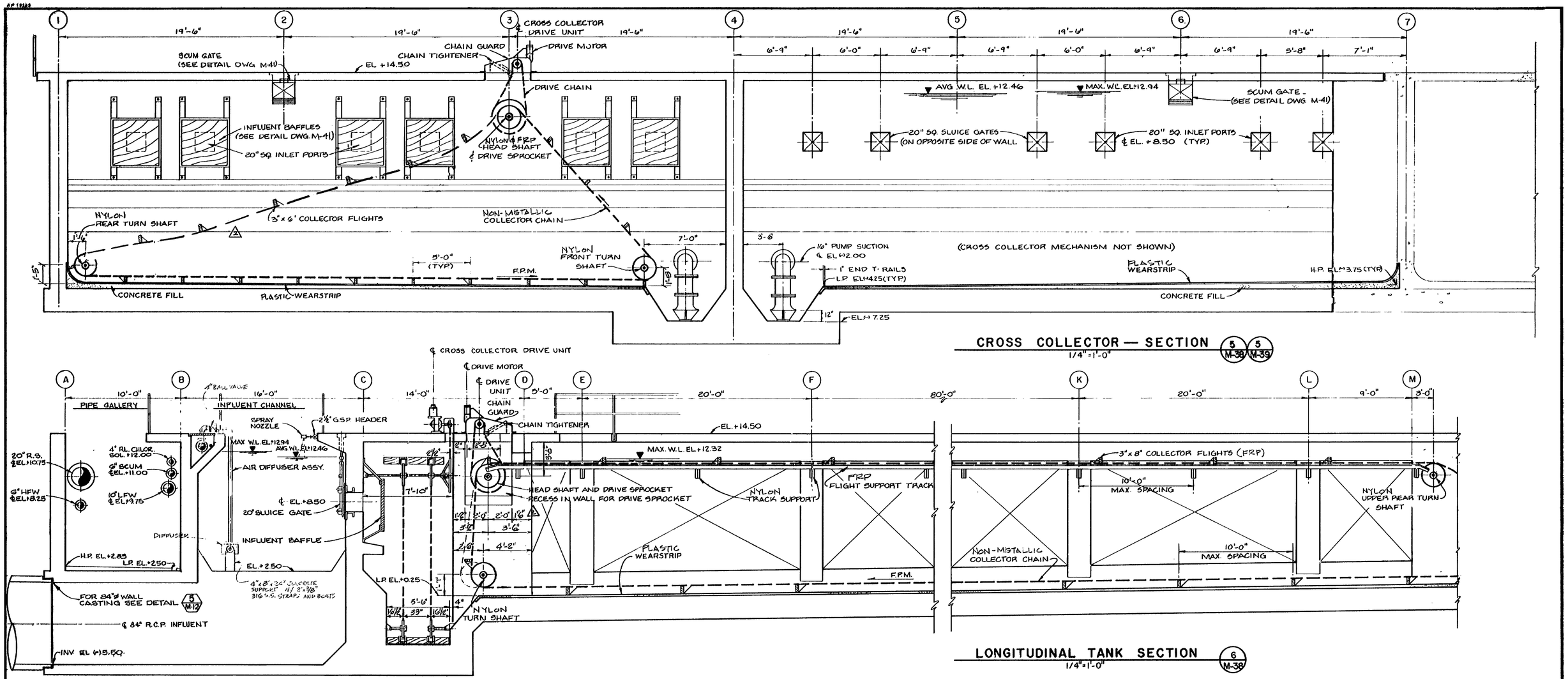

CROSS COLLECTOR — SECTION (5/M-38) (5/M-39)

1/4" = 1'-0"

LONGITUDINAL TANK SECTION (6/M-38)

1/4" = 1'-0"

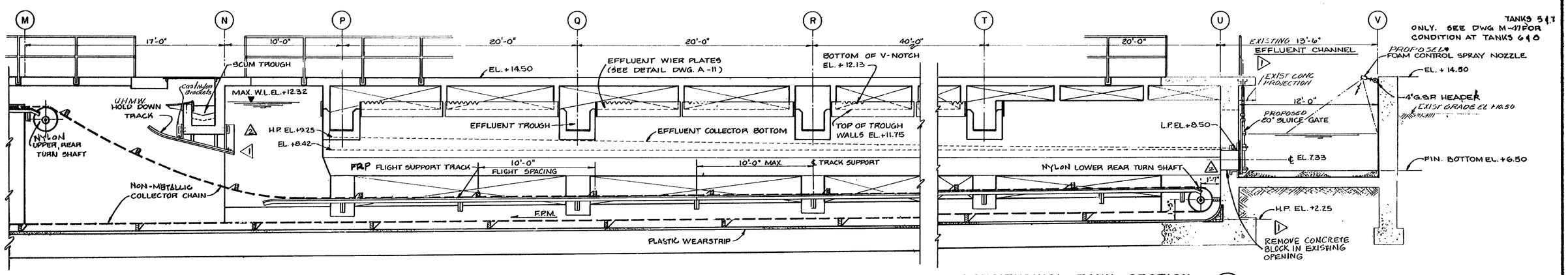

LONGITUDINAL TANK SECTION (6/M-38)

1/4" = 1'-0"

NO.	DATE	ISSUED FOR	BY
2	AUG. 21, 1986	Revised to allow interchangeability of collector equipment parts.	R.V.
1	DEC. 21, 1984	ADDENDUM NO. 2	

DESIGNED J.H.M./R.F.B.
DRAWN L.W.W./A.Q.
CHECKED H.K.
APPROVED W.W.R.
P.E.

POST, BUCKLEY, SCHUH & JERNIGAN INC.
CONSULTING ENGINEERS & PLANNERS
HAZEN AND SAWYER, P.C.
CONSULTING ENGINEERS
MIAMI
A JOINT VENTURE
078-001 8940

MIAMI-DADE WATER AND SEWER AUTHORITY

UPGRADING OF EXISTING CENTRAL DISTRICT WASTEWATER TREATMENT PLANT
VIRGINIA KEY, DADE COUNTY, FLORIDA

MECHANICAL
FINAL SETTLING TANKS
CROSS COLLECTOR SECTION
LONGITUDINAL TANK SECTION

CONTRACT NUMBER(S) S-285
EPA C120429130
DATE MARCH 15, 1984
DWG M-42
SHEET 18 OF 74
REF. NO. S-7737-A

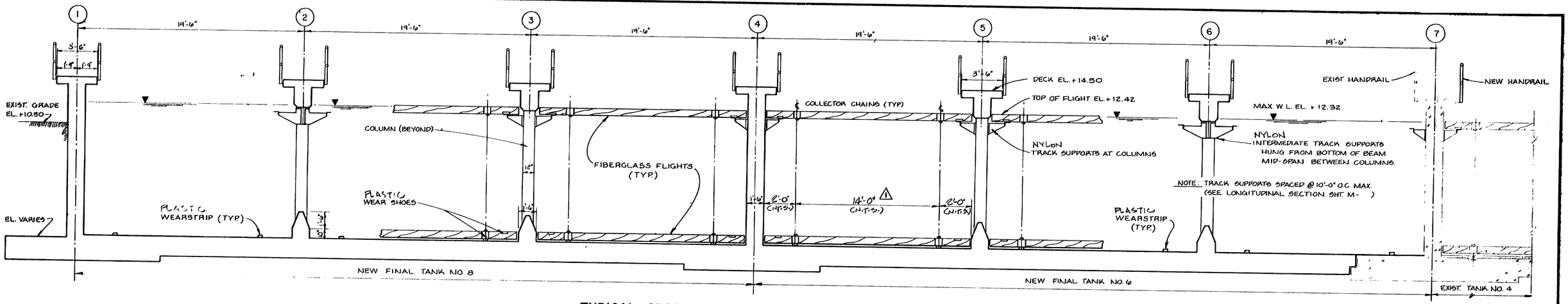

TYPICAL CROSS SECTION—CENTRAL PORTION

1/4"=1'-0"

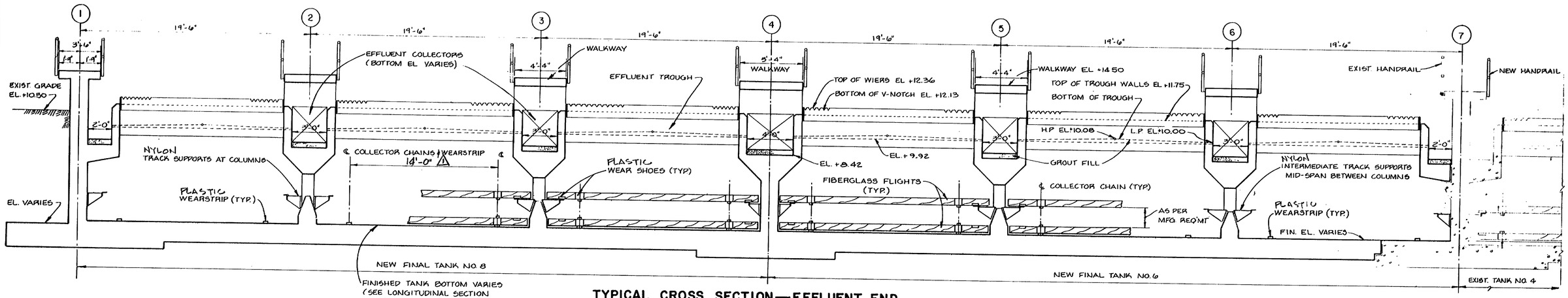

TYPICAL CROSS SECTION—EFFLUENT END

1/4 =1'-0"

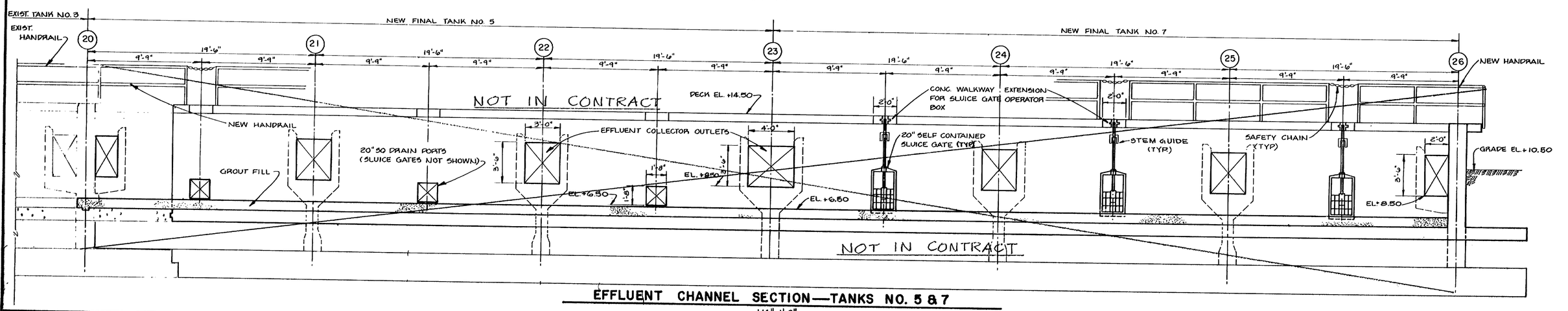

EFFLUENT CHANNEL SECTION—TANKS NO. 5 & 7

1/4"=1'-0"

NO.	DATE	ISSUED FOR	BY
1			
1	AUG.21,1986	Revised to allow interchangeability of collector equipment parts.	R.V.

DESIGNED J.H.M./R.F.B.
DRAWN L.W.W.
CHECKED H.K.
APPROVED W.W.R.

P.E.

POST, BUCKLEY, SCHUH & JERNIGAN INC.
CONSULTING ENGINEERS & PLANNERS
HAZEN AND SAWYER, P.C.
CONSULTING ENGINEERS
MIAMI
A JOINT VENTURE
078-001 8940

MIAMI-DADE WATER AND SEWER AUTHORITY

UPGRADING OF EXISTING CENTRAL DISTRICT WASTEWATER TREATMENT PLANT
VIRGINIA KEY, DADE COUNTY, FLORIDA

MECHANICAL
FINAL SETTLING TANKS
CROSS SECTIONS

CONTRACT NUMBER(S) S-285
EPA C120429130
DATE MARCH 15, 1984

DWG. M-43
SHEET 19 OF 74
REF. NO. S-7738-A

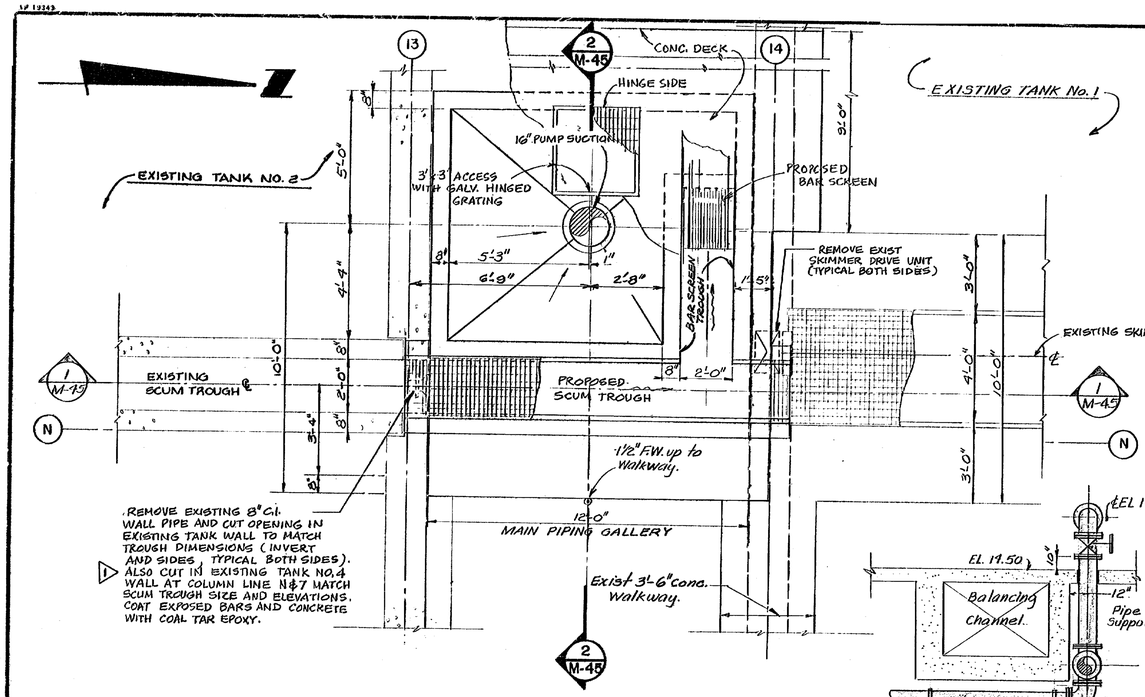

UPPER PLAN

3/8" = 1'-0"

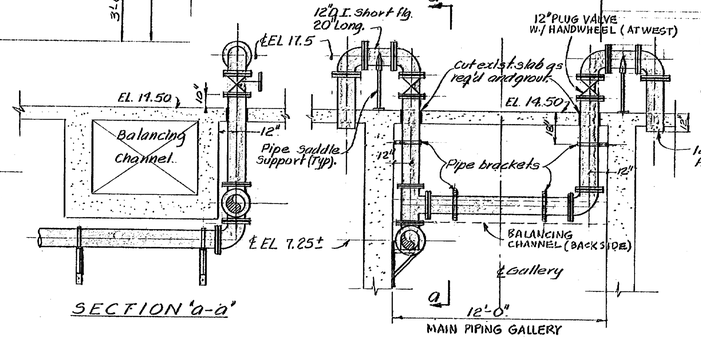

SECTION 'a-a'

SCUM DISCHARGE DETAIL

SCALE: 1/4" = 1'-0"

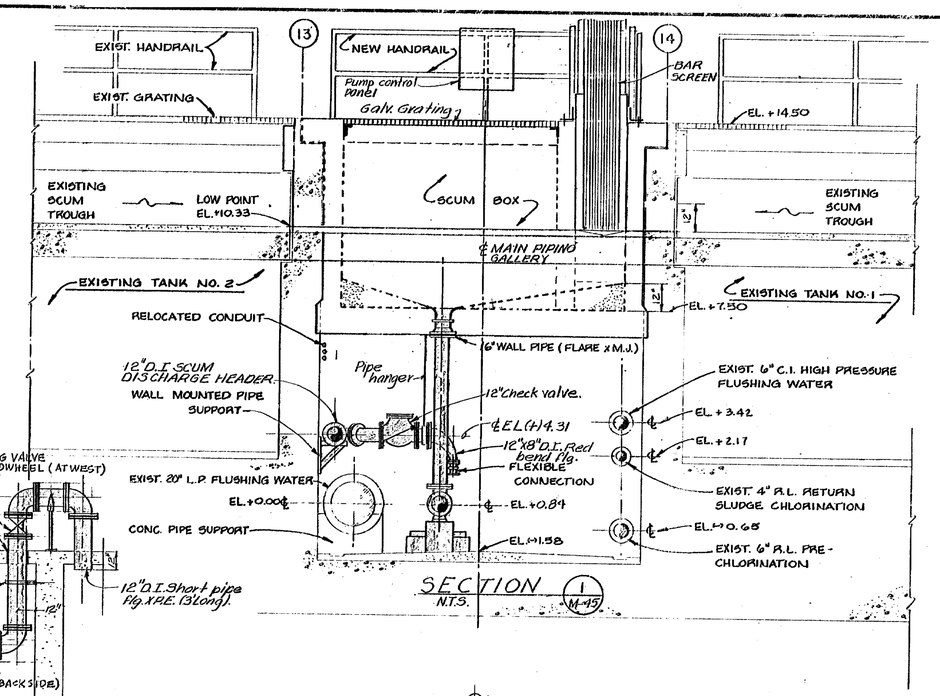

SECTION 1 / M-45

N.T.S.

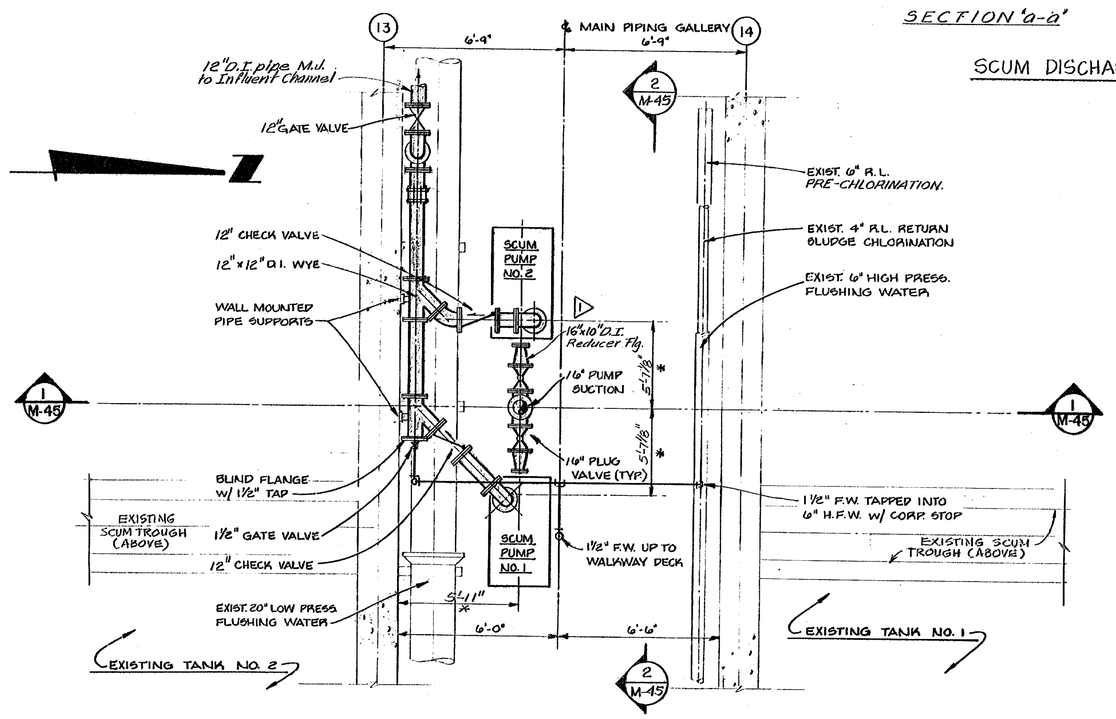

LOWER PLAN

N.T.S.

* VERIFY WITH PUMP DIMENSIONS

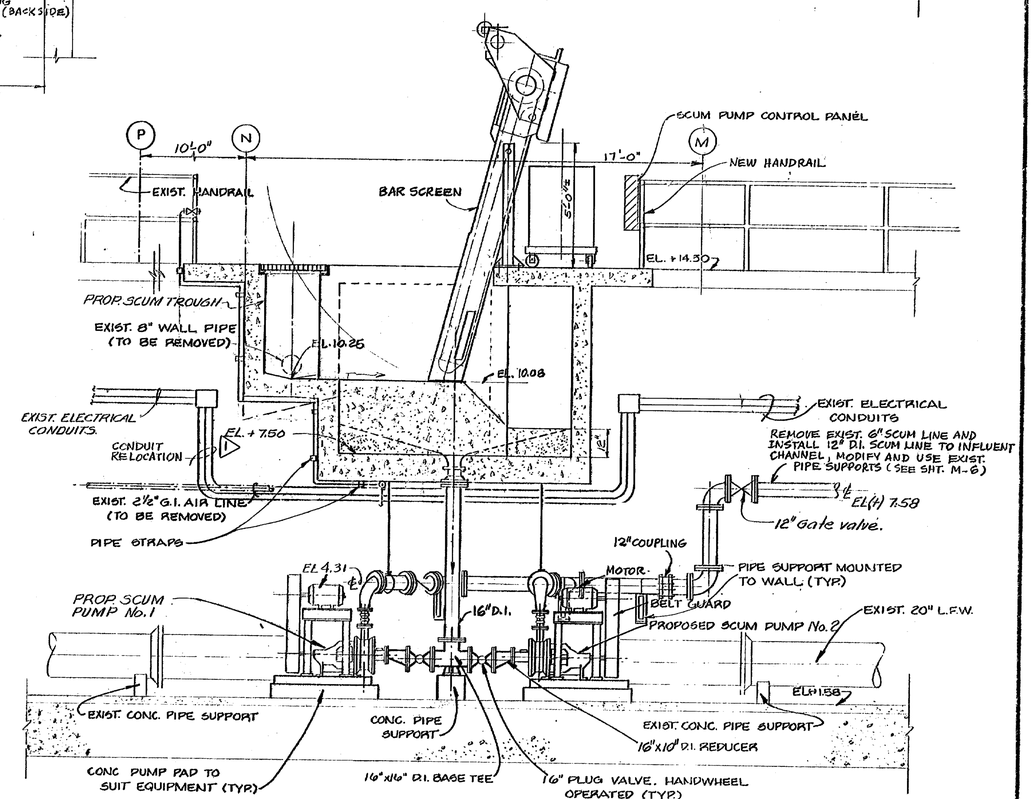

SECTION 2 / M-45

N.T.S.

NO.	DATE	ISSUED FOR	BY
1	DEC. 21, 1984	ADDENDUM NO. 2	

DESIGNED J.H.M./R.F.B.
DRAWN L.W.W.
CHECKED H.K.
APPROVED W.W.R.

P.E.

POST, BUCKLEY, SCHUH & JERNIGAN INC.
CONSULTING ENGINEERS & PLANNERS
HAZEN AND SAWYER, P.C.
CONSULTING ENGINEERS
MIAMI
078-001 8940

A JOINT VENTURE

MIAMI-DADE WATER AND SEWER AUTHORITY

UPGRADING OF EXISTING CENTRAL DISTRICT WATEWATER TREATMENT PLANT
VIRGINIA KEY, DADE COUNTY, FLORIDA

MECHANICAL
FINAL SETTLING TANKS
SCUM PUMPING STATION
MODIFICATIONS
PLAN AND SECTIONS

CONTRACT NUMBER(S) S-285
EPA C120429130
DATE MARCH 15, 1984

DWG. M-45
SHEET 20 OF 74
REF. NO. S-7740-A

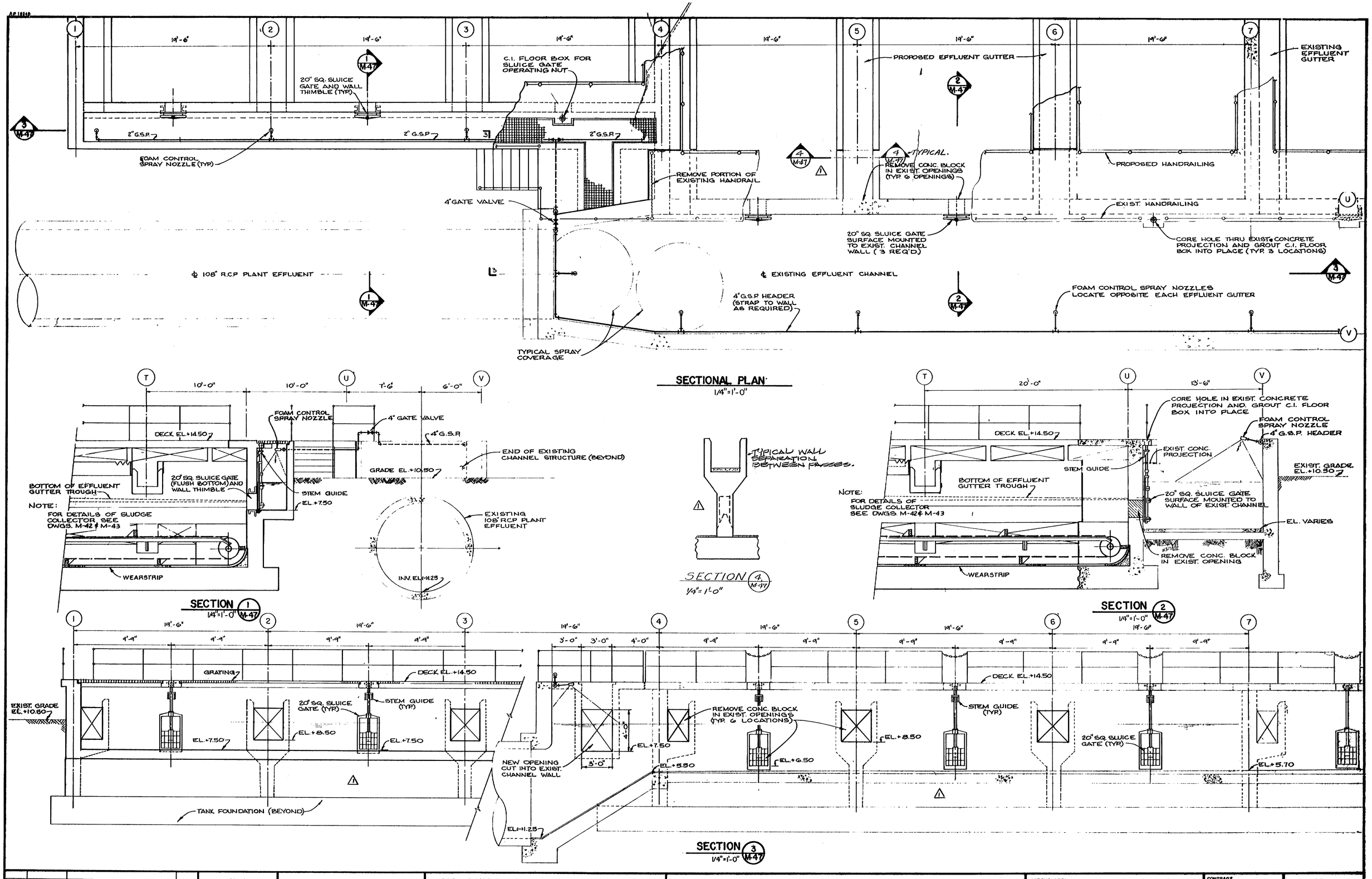

NO.	DATE	ISSUED FOR	BY
1	AUG. 21, 1986	Revised to allow interchangeability of collector equipment parts.	R.V.

DESIGNED J.H.M./R.F.B.
DRAWN A.Q.
CHECKED R.K.
APPROVED W.W.R.

P.E.

POST, BUCKLEY, SCHUH & JERNIGAN INC.
CONSULTING ENGINEERS & PLANNERS
HAZEN AND SAWYER, P.C.
CONSULTING ENGINEERS
MIAMI

A JOINT VENTURE

078-001 8940

MIAMI-DADE WATER AND SEWER AUTHORITY

UPGRADING OF EXISTING CENTRAL DISTRICT WASTEWATER TREATMENT PLANT
VIRGINIA KEY, DADE COUNTY, FLORIDA

MECHANICAL
FINAL SETTLING TANKS
EFFLUENT CHANNEL TANKS 6 & 8
PLAN AND SECTIONS

CONTRACT NUMBER(S) S-285
EPA C120429130
DATE MARCH 15, 1984

DWG. M-47
SHEET 21 OF 74
REF. NO. S-7742-A

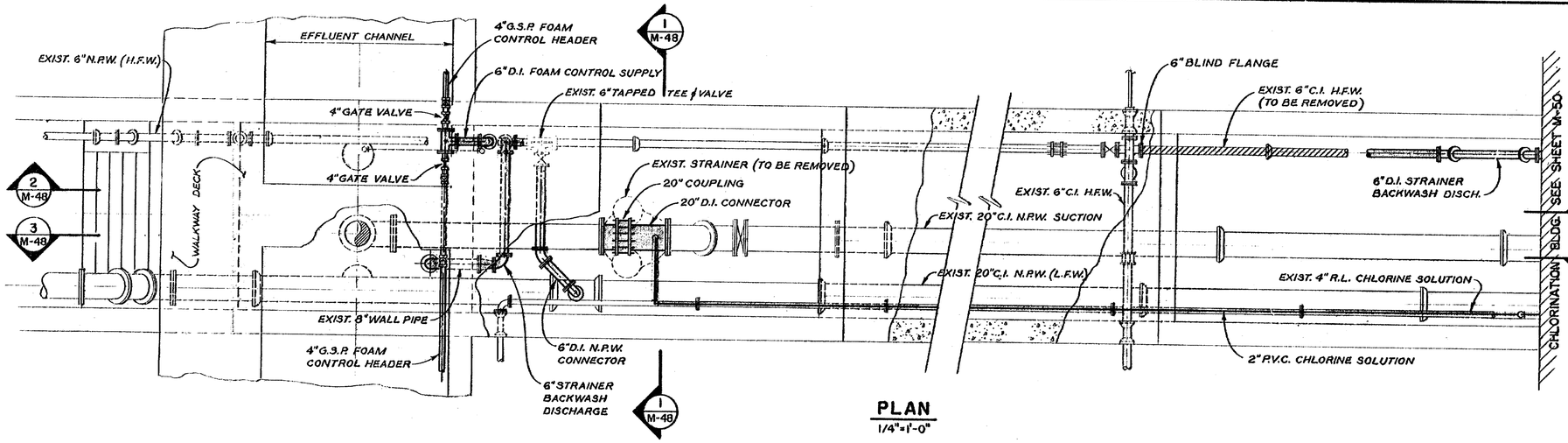

PLAN
1/4"=1'-0"

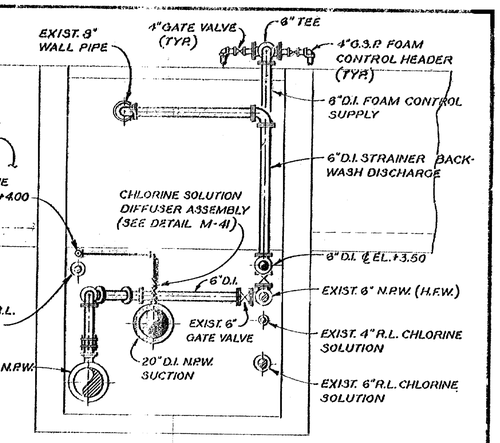

SECTION 1 M-48
1/4"=1'-0"

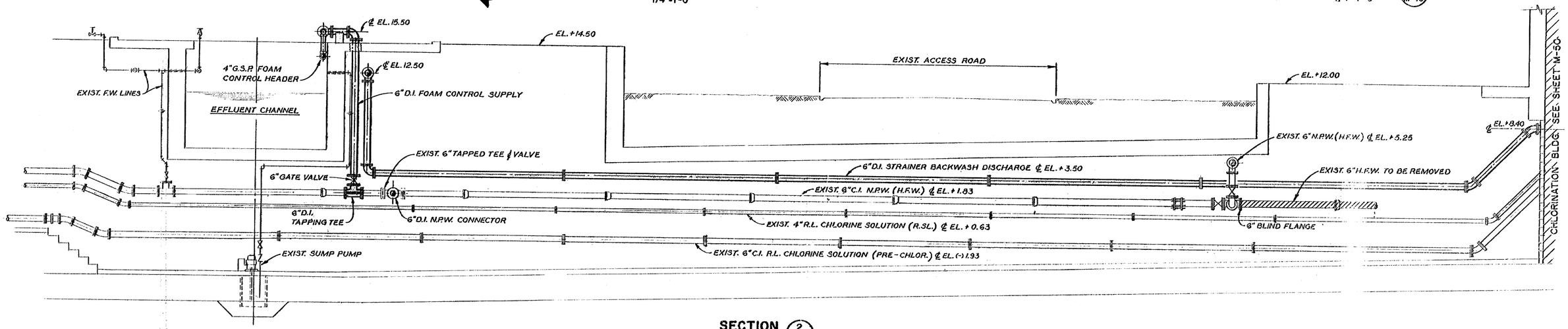

SECTION 2 M-48
1/4"=1'-0"

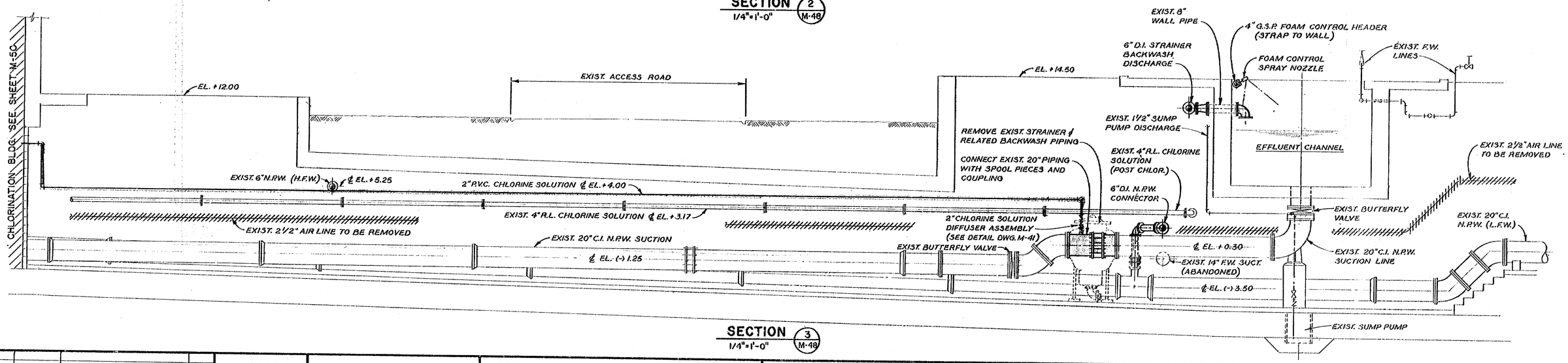

SECTION 3 M-48
1/4"=1'-0"

NO.	DATE	ISSUED FOR	BY

DESIGNED J.H.M./R.F.B.
DRAWN M.Y.
CHECKED H.K.
APPROVED W.W.R.
P.E.

POST, BUCKLEY, SCHUH & JERNIGAN INC.
CONSULTING ENGINEERS & PLANNERS
HAZEN AND SAWYER, P.C.
CONSULTING ENGINEERS
A JOINT VENTURE
MIAMI 078-001 8940

MIAMI-DADE WATER AND SEWER AUTHORITY

UPGRADING OF EXISTING CENTRAL DISTRICT WASTEWATER TREATMENT PLANT
VIRGINIA KEY, DADE COUNTY, FLORIDA

MECHANICAL

SERVICE TUNNEL "C"
PLAN AND SECTIONS

CONTRACT NUMBER(S) S-285
EPA C120429130
DATE MARCH 15, 1984

DWG. M-48
SHEET 22 OF 74
REF. NO. S-7743-A

NOTES

1. MAJOR PIPING REMOVAL HAS BEEN INDICATED ON THIS DRAWING. HOWEVER NUMEROUS SMALL PIPING (I.E., AIR RELEASE, FLUSHING WATER CONNECTIONS, ETC.) SHALL BE REMOVED WHEN NO LONGER REQUIRED OR COMPATIBLE WITH PROPOSED MODIFICATIONS.
2. CONTRACTOR SHALL REMOVE ALL EXISTING PIPE SUPPORT SYSTEMS ASSOCIATED WITH THE INDICATED PIPE TO BE REMOVED.

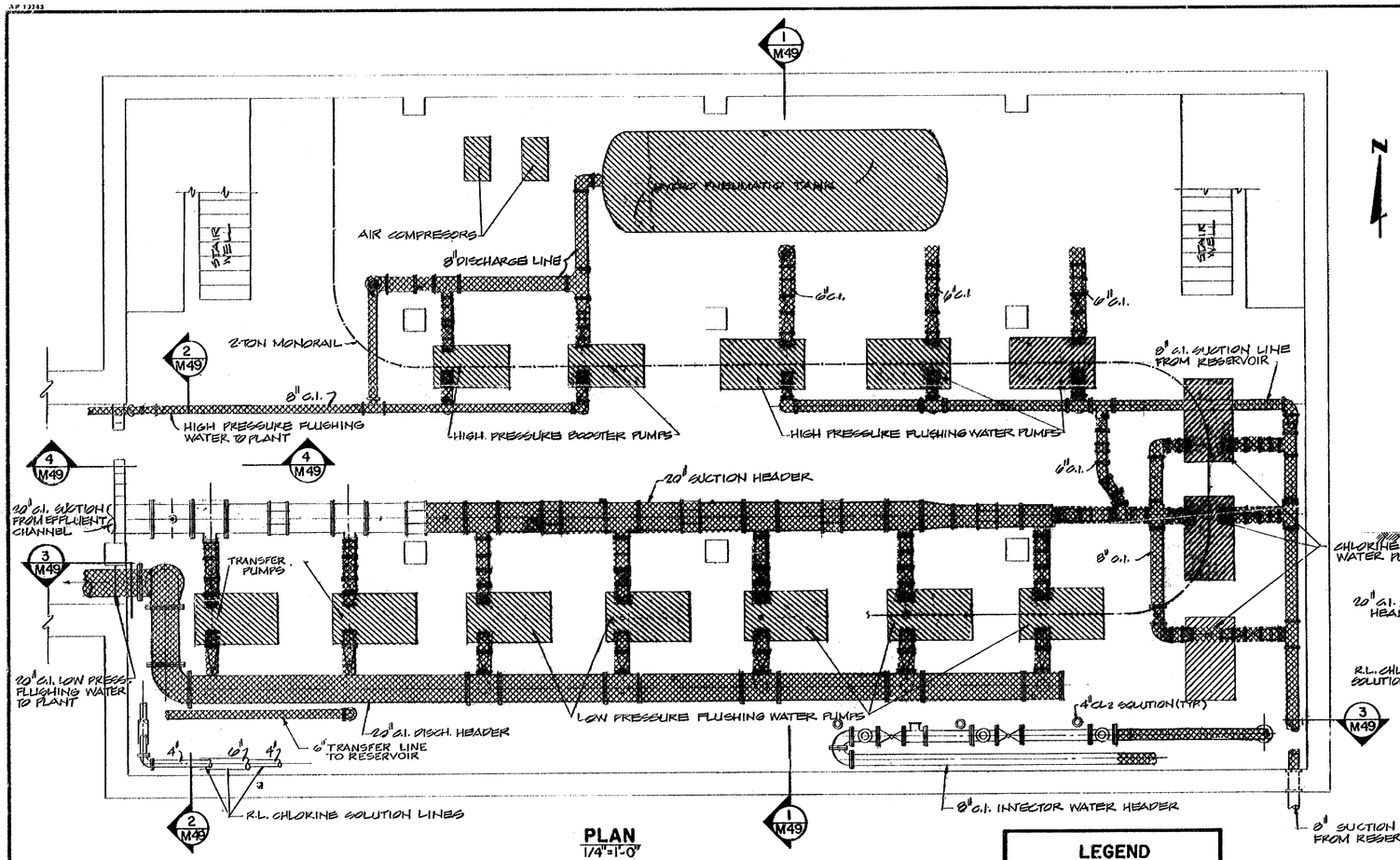

PLAN
1/4"=1'-0"

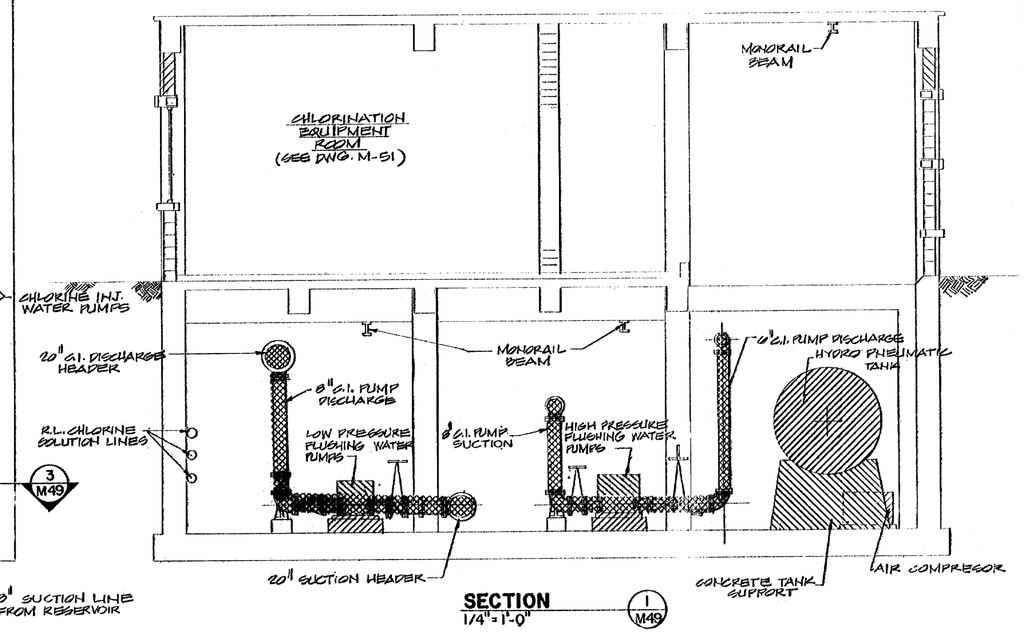

SECTION
1/4"=1'-0" (1/M49)

LEGEND

ITEMS TO BE REMOVED

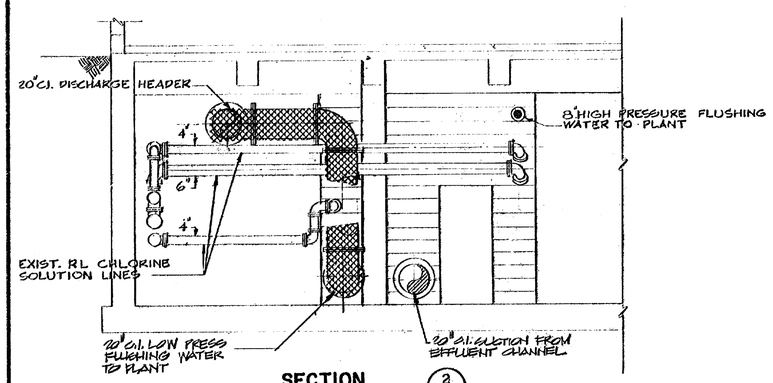

SECTION
1/4"=1'-0" (2/M49)

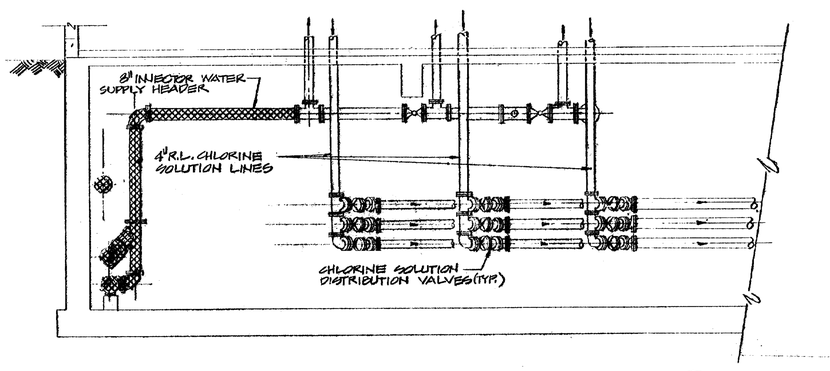

SECTION
1/4"=1'-0" (3/M49)

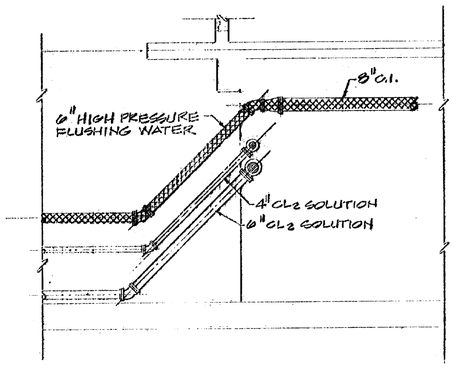

SECTION
1/4"=1'-0" (4/M49)

NO.	DATE	ISSUED FOR	BY

DESIGNED J.H.M./R.F.B.
DRAWN R.R.
CHECKED H.K.
APPROVED W.W.R.

P.E.

POST, BUCKLEY, SCHUH & JERNIGAN INC.
CONSULTING ENGINEERS & PLANNERS
HAZEN AND SAWYER, P.C.
CONSULTING ENGINEERS
MIAMI 073-001 8940

A JOINT VENTURE

MIAMI-DADE WATER AND SEWER AUTHORITY

UPGRADING OF EXISTING CENTRAL DISTRICT WASTEWATER TREATMENT PLANT
VIRGINIA KEY, DADE COUNTY, FLORIDA

MECHANICAL

CHLORINATION BUILDING
EXISTING ITEMS FOR
REMOVAL

CONTRACT NUMBER(S) S-285
EPA C120429130
DATE MARCH 15, 1984

DWG. M-49
SHEET 23 OF 74
REF. NO. S-7744-A

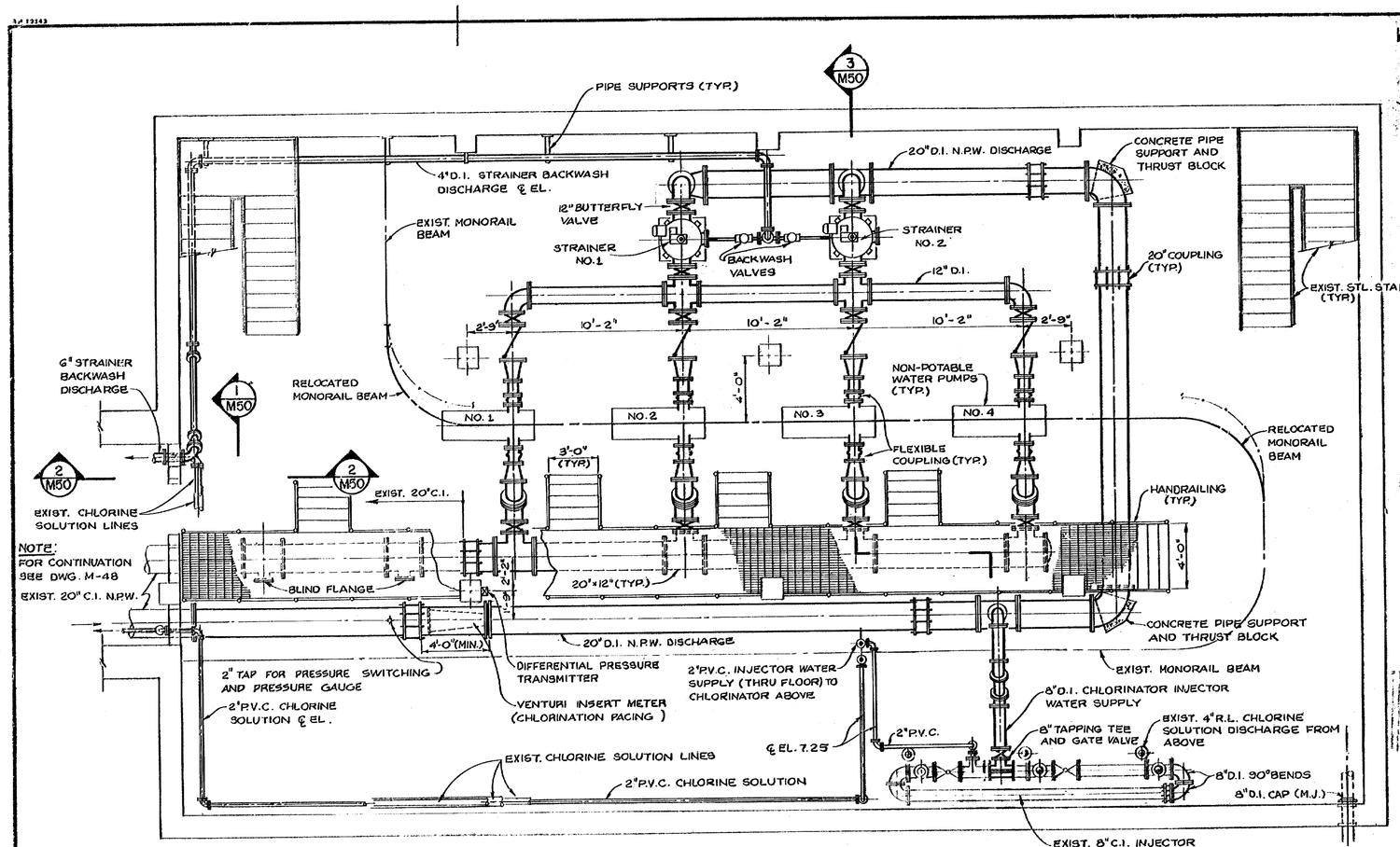

PLAN
1/4" = 1'-0"

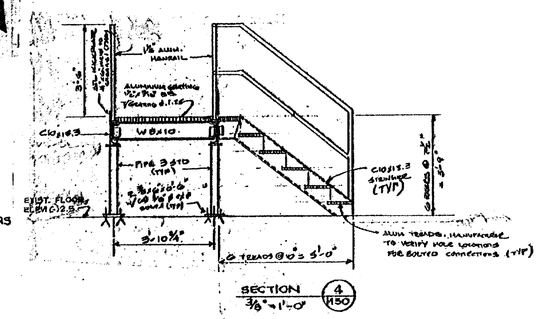

SECTION 4 M50
3/8" = 1'-0"

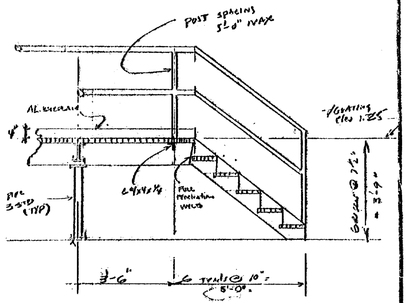

SECTION 5 M50
3/8" = 1'-0"

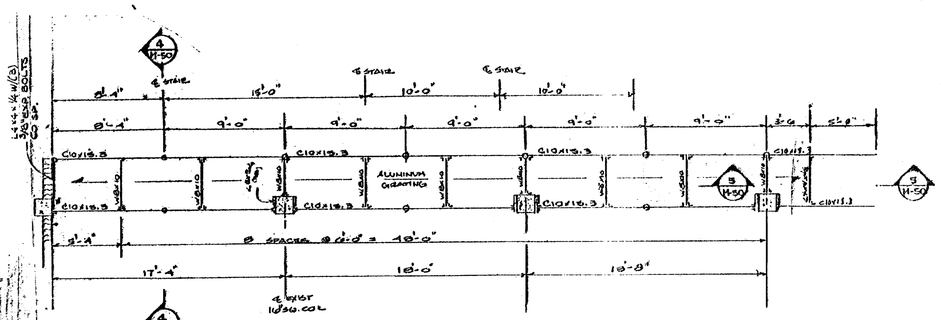

PLAN - WALKWAY FRAMING
3/16" = 1'-0"

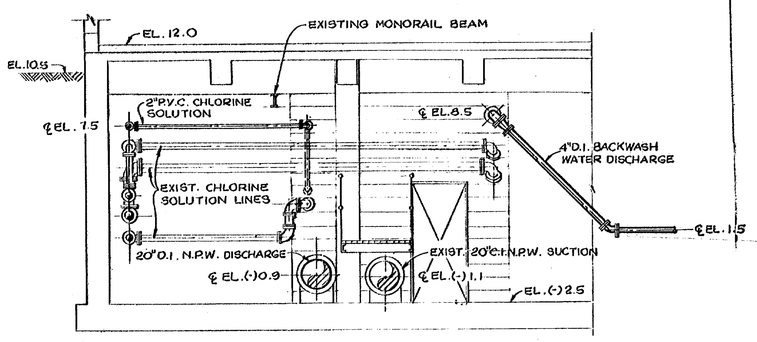

SECTION 1 M50
1/4" = 1'-0"

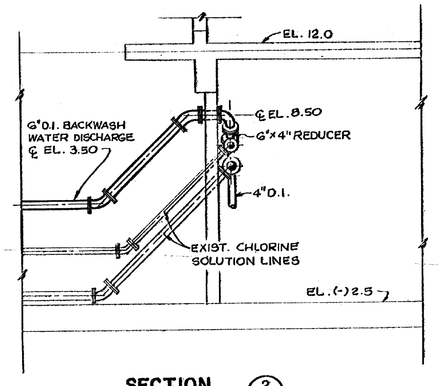

SECTION 2 M50
1/4" = 1'-0"

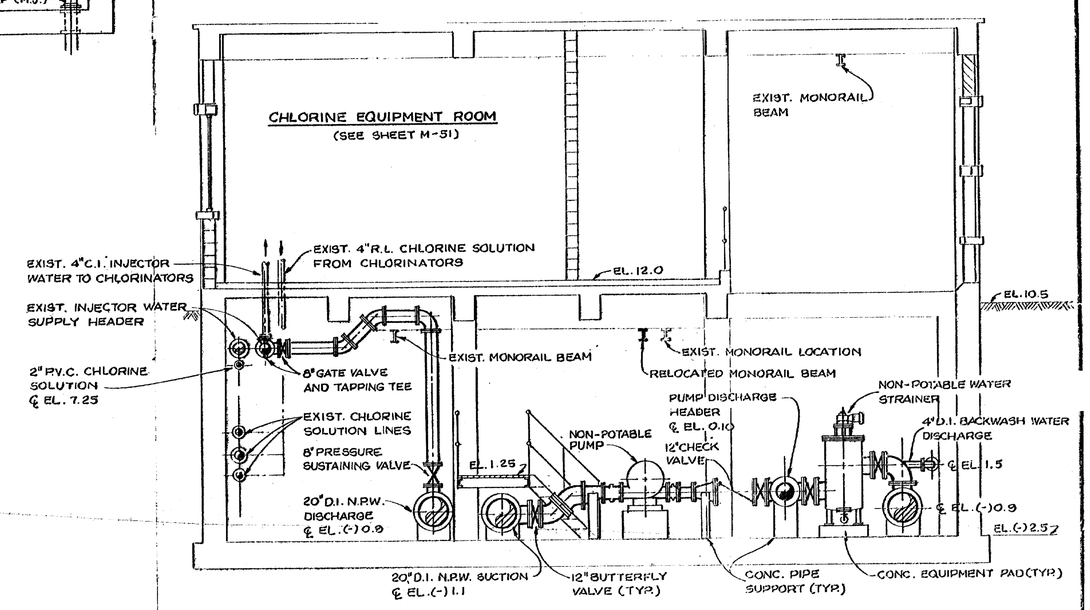

SECTION 3 M50
1/4" = 1'-0"

NO.	DATE	ISSUED FOR	BY

DESIGNED J.H.M./R.F.B.
DRAWN M.M.M.
CHECKED H.K.
APPROVED W.W.R.

P.E.

POST, BUCKLEY, SCHUH & JERNIGAN INC.
CONSULTING ENGINEERS & PLANNERS
HAZEN AND SAWYER, P.C.
CONSULTING ENGINEERS
MIAMI
078-001 8940

MIAMI-DADE WATER AND SEWER AUTHORITY
UPGRADING OF EXISTING CENTRAL DISTRICT WASTEWATER TREATMENT PLANT
VIRGINIA KEY, DADE COUNTY, FLORIDA

MECHANICAL
CHLORINATION BUILDING MODIFICATIONS
PLAN AND SECTIONS

CONTRACT NUMBER(S) S-285
EPA C120429130
DATE MARCH 15, 1984

DWG. M-50
SHEET 24 OF 74
REF. NO. S-7745-A

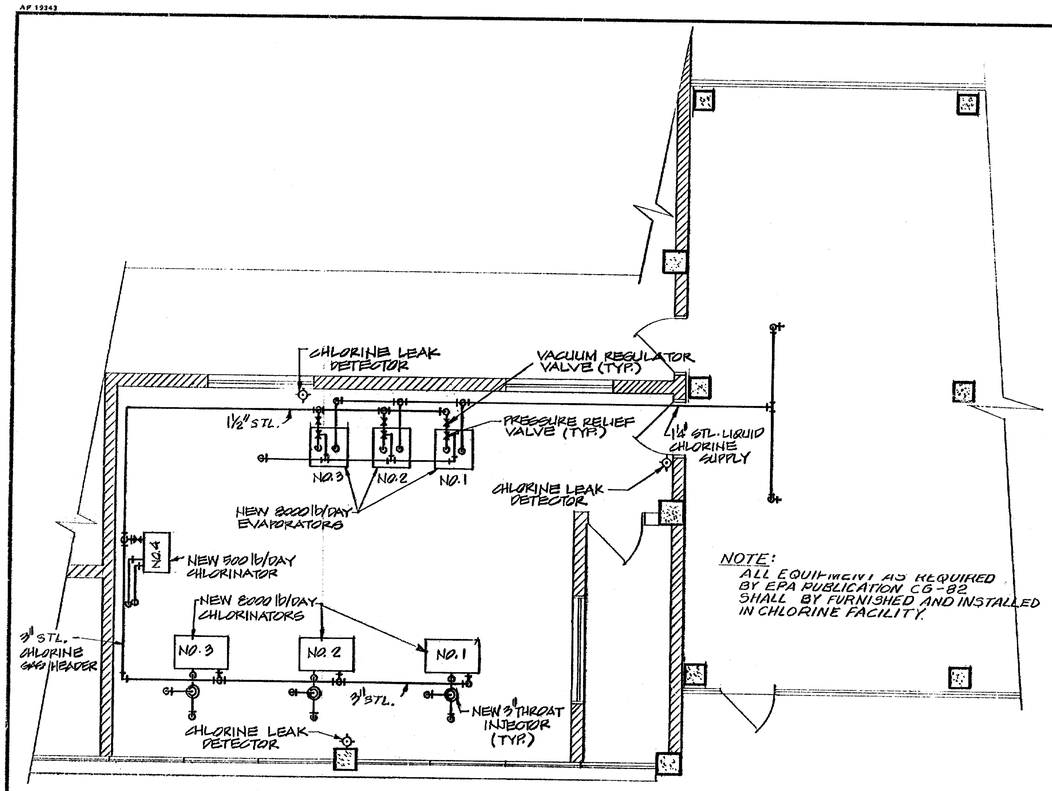

NOTE:
ALL EQUIPMENT AS REQUIRED BY EPA PUBLICATION CG-82 SHALL BY FURNISHED AND INSTALLED IN CHLORINE FACILITY.

CHLORINATION ROOM
PARTIAL FLOOR PLAN - PROPOSED CONDITIONS
SCALE: 1/4"=1'-0"

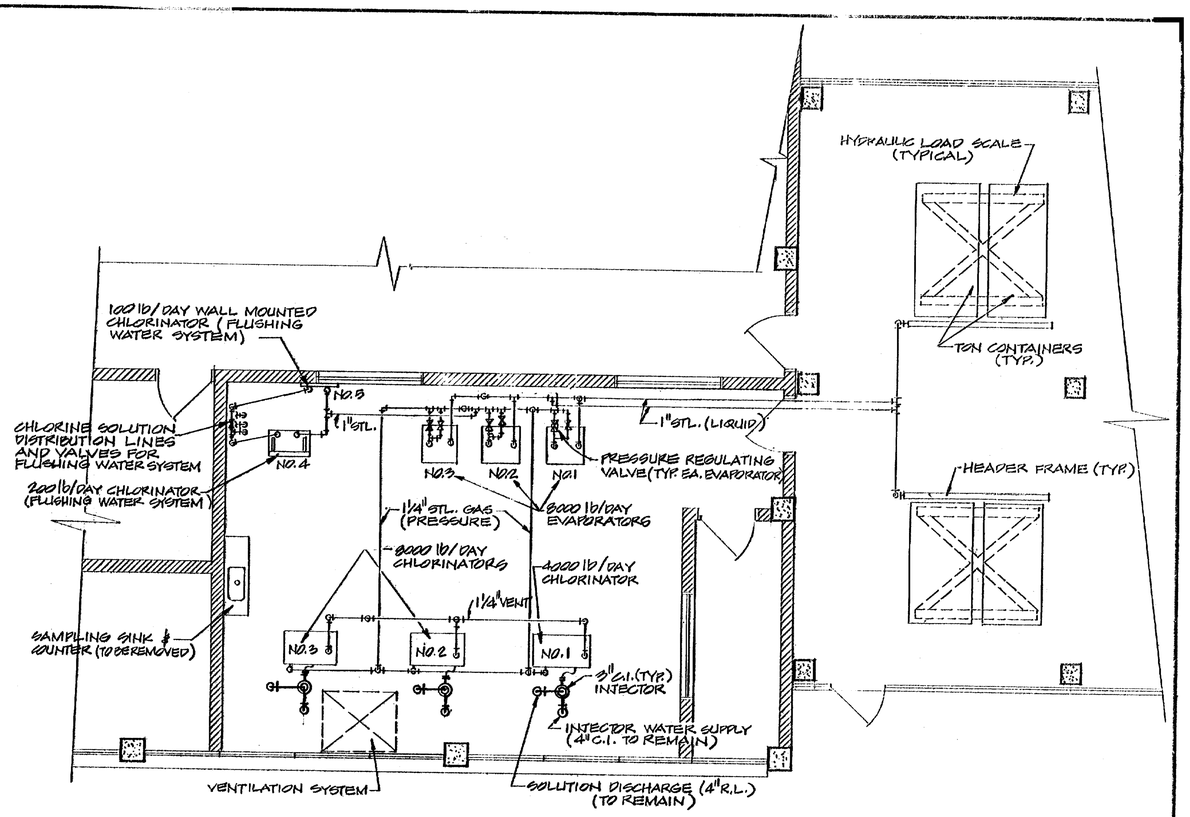

CHLORINATION ROOM
PARTIAL FLOOR PLAN - EXISTING CONDITIONS
SCALE: 1/4"=1'-0"

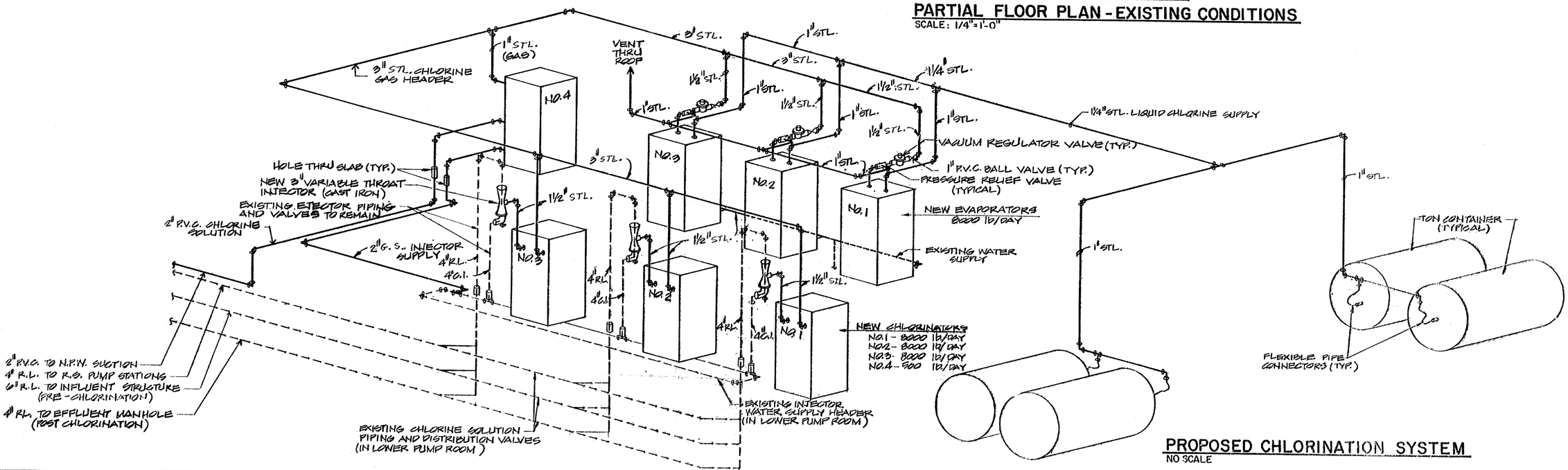

PROPOSED CHLORINATION SYSTEM
NO SCALE

NO.	DATE	ISSUED FOR	BY

DESIGNED J.H.M./R.F.B.
DRAWN M.B./R.R.
CHECKED H.K.
APPROVED W.W.R.
P.E.

POST, BUCKLEY, SCHUH & JERNIGAN INC.
CONSULTING ENGINEERS & PLANNERS
HAZEN AND SAWYER, P.C.
CONSULTING ENGINEERS
A JOINT VENTURE
MIAMI 078-001 8940

MIAMI-DADE WATER AND SEWER AUTHORITY
UPGRADING OF EXISTING CENTRAL DISTRICT WASTEWATER TREATMENT PLANT
VIRGINIA KEY, DADE COUNTY, FLORIDA

MECHANICAL
CHLORINATION BUILDING
CHLORINATION SYSTEM
MODIFICATIONS

CONTRACT NUMBER(S) 3-285
EPA C120429130
DATE MARCH 15, 1984

DWG. M-51
SHEET 25 OF 74
REF NO. S-7748-A

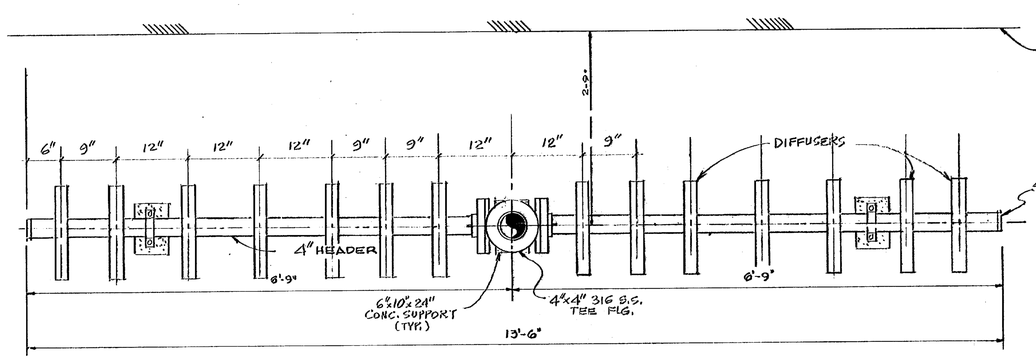

DIFFUSER HEADER ASSEMBLY - TYPE "A"

1"=1'-0"

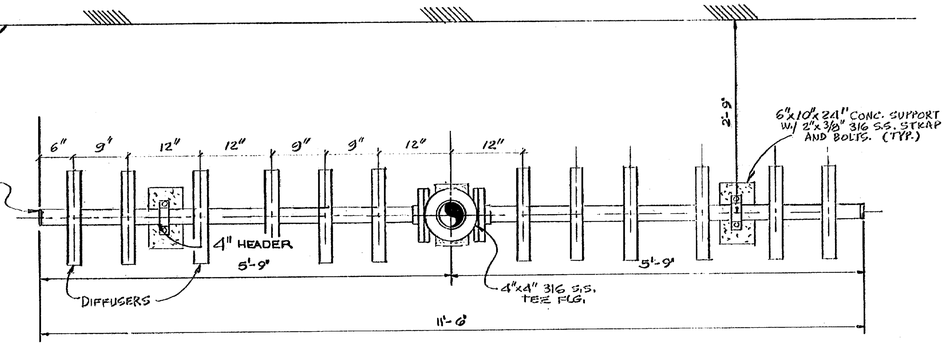

DIFFUSER HEADER ASSEMBLY - TYPE "B"

1"=1'-0"

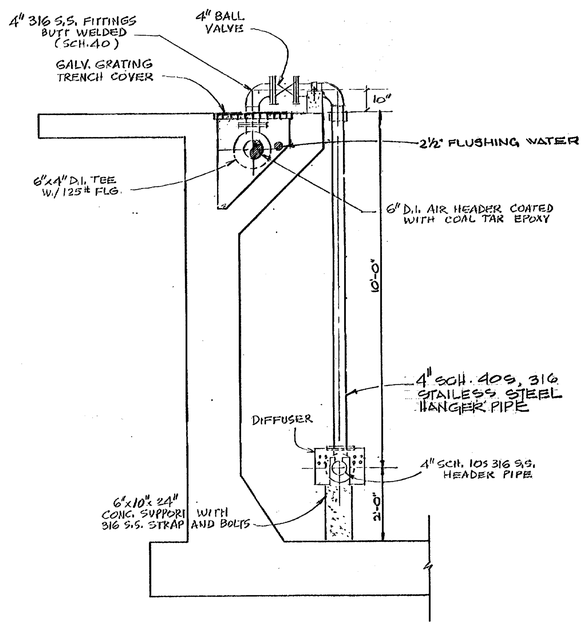

TYPICAL AIR DIFFUSER INSTALLATION

1/2"=1'-0"

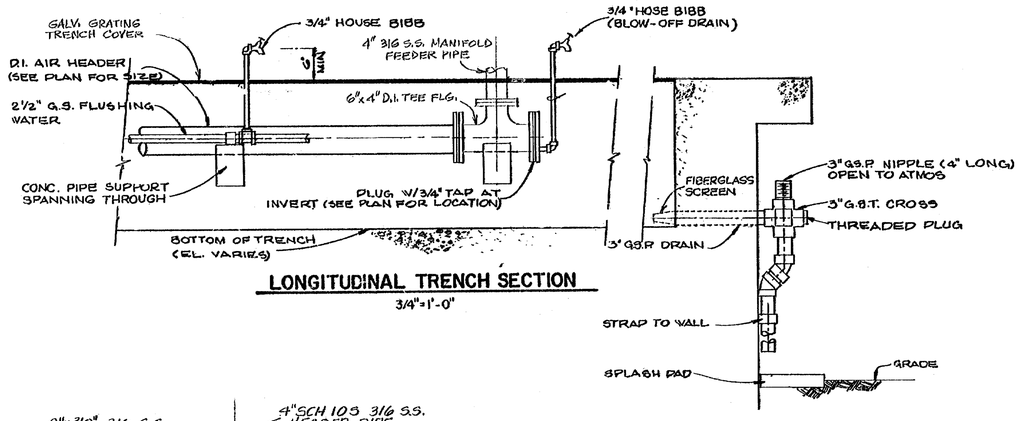

LONGITUDINAL TRENCH SECTION

3/4"=1'-0"

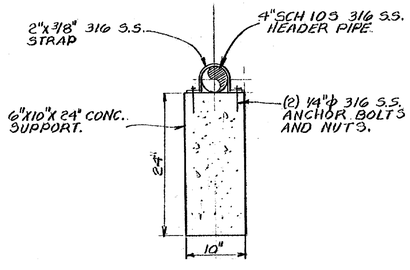

STRAP DETAIL

1"=1'-0"

NO.	DATE	ISSUED FOR	BY

DESIGNED J.H.M./R.F.B.
DRAWN A.Q.
CHECKED H.K.
APPROVED W.W.R.

P.E.

POST, BUCKLEY, SCHUH & JERNIGAN INC.
CONSULTING ENGINEERS & PLANNERS
HAZEN AND SAWYER, P.C.
CONSULTING ENGINEERS
A JOINT VENTURE
MIAMI 078-001 8940

MIAMI-DADE WATER AND SEWER AUTHORITY

UPGRADING OF EXISTING CENTRAL DISTRICT WASTEWATER TREATMENT PLANT
VIRGINIA KEY, DADE COUNTY, FLORIDA

MECHANICAL

AIR DIFFUSER EQUIPMENT DETAILS

CONTRACT NUMBER(S) S-285
EPA C120429130
DATE MARCH 15, 1984

DWG. M-52
SHEET 26 OF 74
REF. NO. S-7747-A

AF 19243

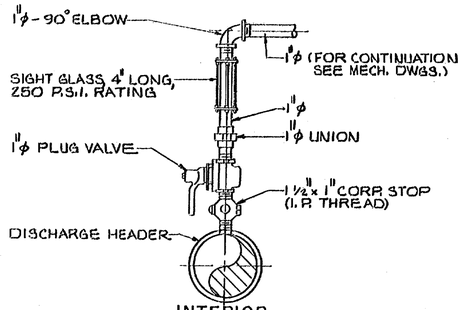

INTERIOR
AIR RELEASE VALVE DETAIL
N.T.S.

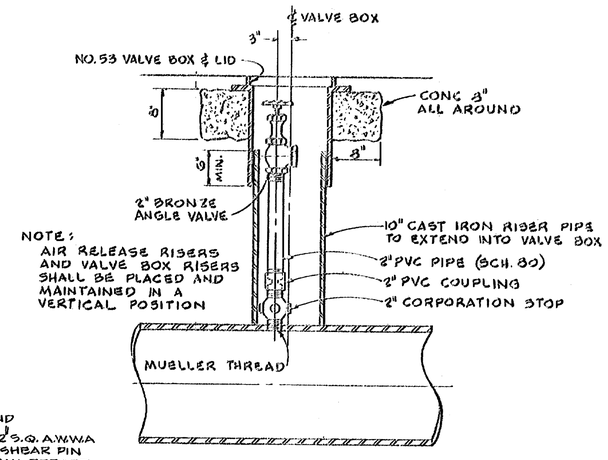

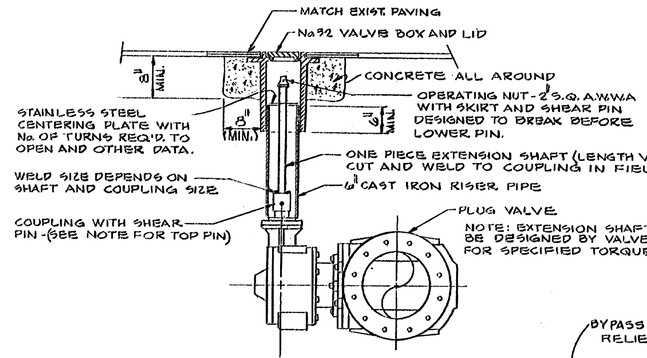

EXTERIOR
AIR RELEASE VALVE DETAIL
N.T.S.

TYPICAL PLUG VALVE INSTALLATION
24" AND SMALLER
N.T.S.

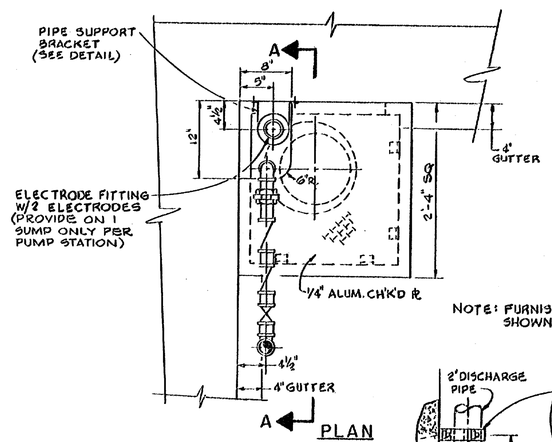

PLAN

NOTE: FURNISH PIPING WITH ORIENTATION SHOWN ON MECHANICAL PLANS

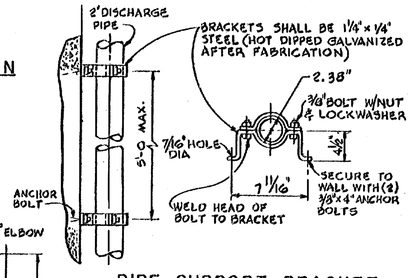

PIPE SUPPORT BRACKET

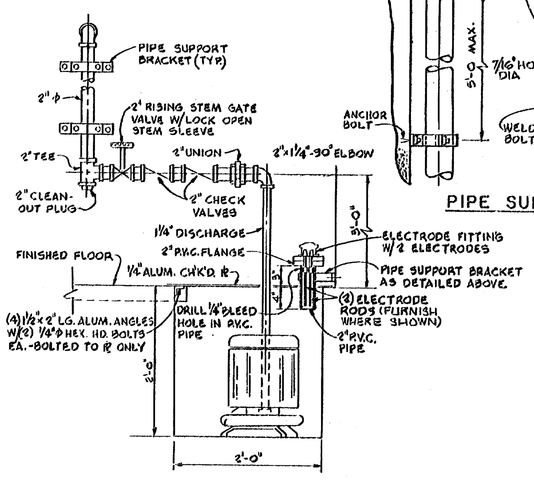

SECTION A-A

SUMP PUMP DETAILS

SCALE : NONE

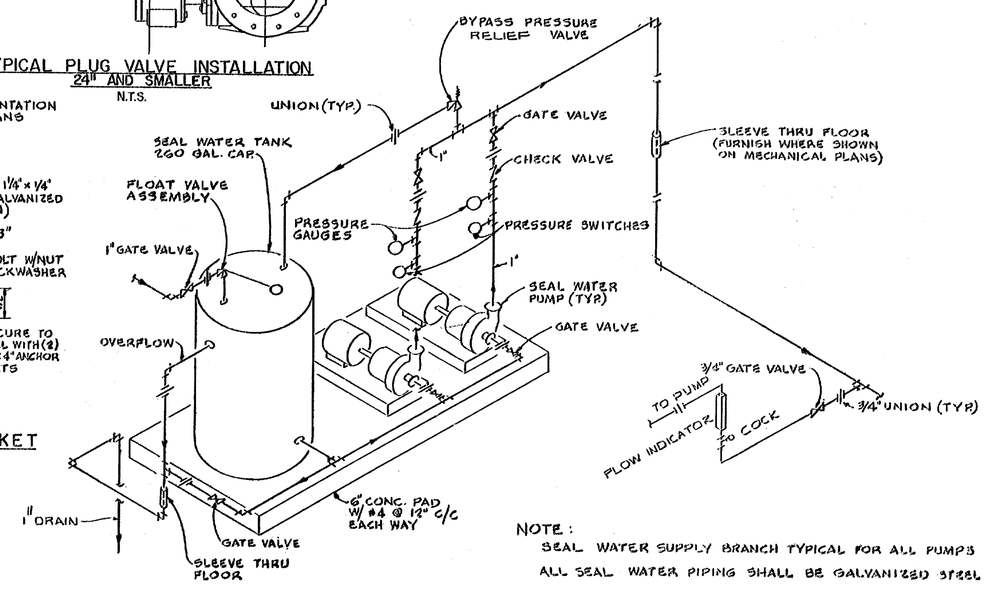

NOTE:
SEAL WATER SUPPLY BRANCH TYPICAL FOR ALL PUMPS
ALL SEAL WATER PIPING SHALL BE GALVANIZED STEEL

SEAL WATER PIPING SCHEMATIC

N. T. S.

NO.	DATE	ISSUED FOR	BY

DESIGNED HJF/JOH
DRAWN J.M.F.
CHECKED H.J.F.
APPROVED J.N.R.

P.E.

POST, BUCKLEY, SCHUH & JERNIGAN INC.
CONSULTING ENGINEERS & PLANNERS
HAZEN AND SAWYER, P.C.
CONSULTING ENGINEERS
MIAMI

078-001 8340

MIAMI-DADE WATER AND SEWER AUTHORITY

UPGRADING OF EXISTING CENTRAL DISTRICT WASTEWATER TREATMENT PLANT
VIRGINIA KEY, DADE COUNTY, FLORIDA

MECHANICAL
MISCELLANEOUS DETAILS
SHEET 1

CONTRACT NUMBER(S) S-285
EPA C120429130
DATE MAR. 15, 1984

DWG. M-53
SHEET 27 OF 74
REF. NO. S-7748-A

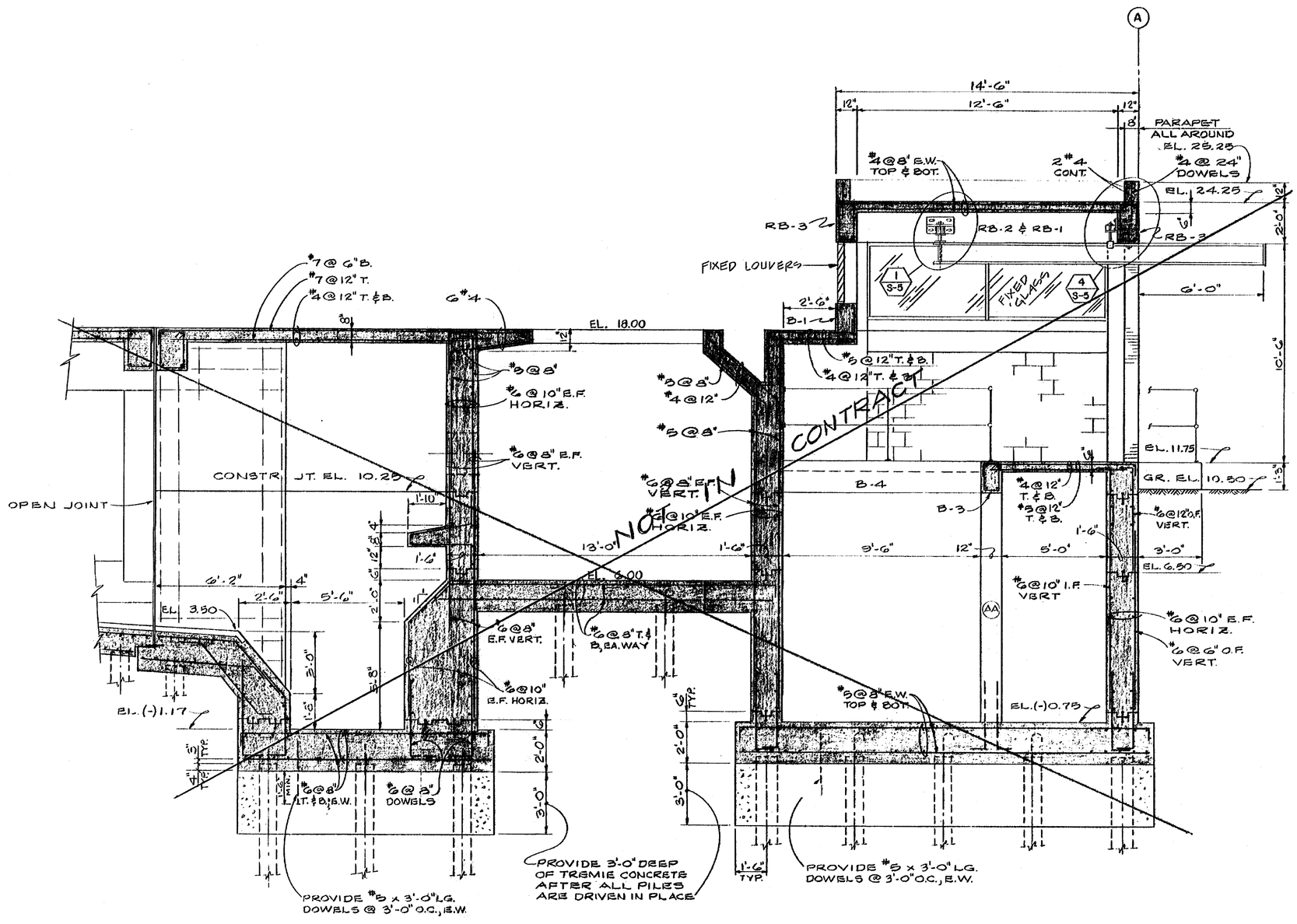

SECTION 3 / S-1, 2,3
3/8" = 1'-0"

STRUCTURAL NOTES

1. ELEVATIONS: REFER TO CITY OF MIAMI DATUM.
2. CONCRETE: ULTIMATE STRENGTH OF CONCRETE @ 28 DAYS.

   ALL SLABS, WALLS, BEAMS & COLUMNS - $f'c$ = 3000 PSI
3. REINFORCING STEEL: ASTM A615, GRADE 60
4. REINFORCING BAR SPLICES: 40 BAR DIAMETERS UNLESS OTHERWISE SHOWN ON PLANS.
5. CONCRETE COVERAGE: REINFORCEMENT COVER SHALL BE AS FOLLOWS UNLESS OTHERWISE NOTED ON DRAWINGS:
   (A) CONCRETE PLACED DIRECTLY AGAINST SOIL - - - - - - - 3"
   (B) CONCRETE EXPOSED TO WEATHER (#5 OR SMALLER) - - 1½"
   (#6 OR LARGER) - - 2"
   (C) SLABS - 1"
   (D) BEAMS & COLUMNS (TO MAIN REINFORCEMENT) - - - - - - 2"
   (E) WALLS 12" OR MORE - - - - - - - - - - - - - - - - - - - 2"
   WALLS LESS THAN 12" (#5 OR SMALLER) - - - - - - - 1½"
   (#6 OR LARGER) - - - - - - - 2"
   (F) FOR SURFACES EXPOSED TO WASTEWATER ADD - - - - - - 1/2"
6. OPENINGS & EMBEDDED ITEMS: SHALL BE LOCATED BEFORE PLACING CONCRETE. LOCATION & SIZE OF ALL OPENINGS, ENCASED CONDUITS, PIPING, DUCTS, PLATES, INSERTS, ANGLES & ANCHOR BOLTS SHALL BE VERIFIED WITH ELECTRICAL, MECHANICAL & MANUFACTURER'S SHOP DRAWINGS.
7. EXPANSION JOINTS: SHALL HAVE A 9" WIDE x 3/8" THICK (MINIMUM) P.V.C. OR NEOPRENE WATERSTOP, UNLESS NOTED OTHERWISE ON DRAWINGS. SEE PROJECT SPECIFICATIONS FOR SELECTIONS, TYPES & REQUIRED INFORMATION.
8. CONSTRUCTION JOINTS: OTHER THAN THE ONES SHOWN IN PLANS SHALL BE SUBJECT TO APPROVAL OF THE ENGINEER.
9. DOWEL BAR SPLICERS: SHALL BE FABRICATED FROM STANDARD DEFORMED BARS WHICH HAVE A FEMALE THREADED FLANGED END TO RECEIVE FUTURE DOWEL-IN REBARS. DOWEL SPLICERS, AS SHOWN ON THE DRAWINGS SHALL BE OF GRADE 60 REBARS WITH HOOKED ENDS EMBEDDED IN THE CONCRETE & SHALL RECEIVE A THREADED #6 SIZE DOWEL-IN REBAR. SPLICER SHALL BE MANUFACTURED BY "RICHMOND SCREW ANCHOR CO., INC.; FT. WORTH, TEXAS" OR EQUAL.
10. SLABS ON FILL: SHALL BE A MINIMUM OF 4" THICK, WITH A MINIMUM OF ASTM A185 GALVANIZED 6x6/10x10 WELDED WIRE FABRIC THROUGHOUT, UNLESS OTHERWISE NOTED. PROVIDE MOISTURE BARRIER UNDER ALL SLABS FORMED ON FILL.
11. STRUCTURAL SLABS:

    PIPE OPENINGS: TO BE SLEEVED AS FOLLOWS:

    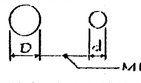

    THE EQUIVALENT OF STEEL INTERRUPTED BY OPENINGS TO BE ADDED TO SIDES. BARS EXTEND WITH A MINIMUM LAP OF 40 BAR DIAMETERS BEYOND OPENING. TOP STEEL INTERRUPTED BY OPENING TO TERMINATE WITH 180 DEGREE HOOK.
12. LINTELS: SPANS UP TO 10'-0" - 8"x8" WITH 4 #5 AND #2 TIES @ 8" (MIN.). EXTEND LINTEL 8" (MIN.) BEYOND OPENING. PROVIDE DOWELS FROM COLUMNS TO MATCH LINTEL STEEL WHEN FRAMING INTO COLUMNS. PROVIDE 1"x8"x8" SHEAR KEY AT COLUMN FACE. LAP STEEL 24 BAR DIAMETERS.
13. STRUCTURAL STEEL: SHALL BE ASTM A36 FOR ANGLES, BEAMS, RAILS & PLATES. ANCHOR BOLTS SHALL BE ASTM A307.
14. WELDING: SHALL BE DONE BY A CERTIFIED ARC WELDER, USING THE LATEST APPROVED AMERICAN WELDING SOCIETY TECHNIQUES.
15. ALUMINUM: SHAPES SHALL BE 6061-T6 ALLOY THROUGHOUT THE PROJECT, UNLESS NOTED OTHERWISE. ALUMINUM BOLTS SHALL BE 2024-T4 ALLOY OR 6061-T6 ALLOY. ALUMINUM SURFACES IN CONTACT WITH CONCRETE OR DISSIMILAR METALS SHALL BE PROTECTED WITH A HEAVY COATING OF BITUMINOUS PAINT.
16. *FINAL SETTLING TANKS: (LIVE LOADS).*
    (PUMP STATION ROOF) = 30 P.S.F.
    WALKWAY = 100 P.S.F
    PUMP STATION = 250 P.S.F
    (INTERIOR)

NO.	DATE	ISSUED FOR	BY
	DEC. 21, 1984	ADDENDUM NO. 2	

DESIGNED A.M.W.
DRAWN N.K.N.
CHECKED A.M.W.
APPROVED J.N.R.

P.E.

POST, BUCKLEY, SCHUH & JERNIGAN INC.
CONSULTING ENGINEERS & PLANNERS
HAZEN AND SAWYER, P.C.
CONSULTING ENGINEERS
MIAMI 078-001 8940

A JOINT VENTURE

MIAMI-DADE WATER AND SEWER AUTHORITY

UPGRADING OF EXISTING CENTRAL DISTRICT WASTEWATER TREATMENT PLANT
VIRGINIA KEY, DADE COUNTY, FLORIDA

STRUCTURAL

STRUCTURAL NOTES AND DETAILS

CONTRACT NUMBER(S) S-285 A
EPA C120429120
DATE MAR. 15, 1984

DWG. S-6
SHEET 27A OF 74
REF. NO. S-7754-A

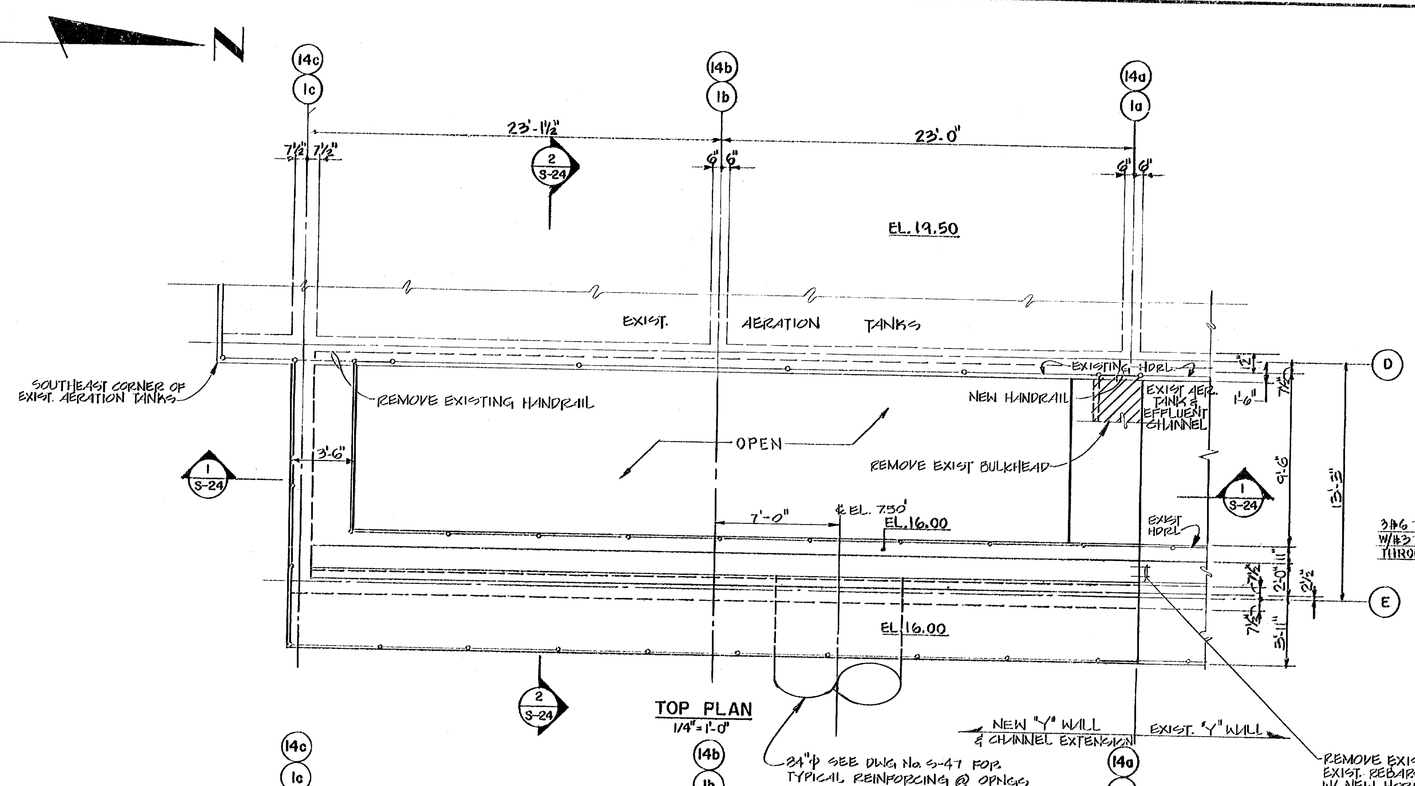

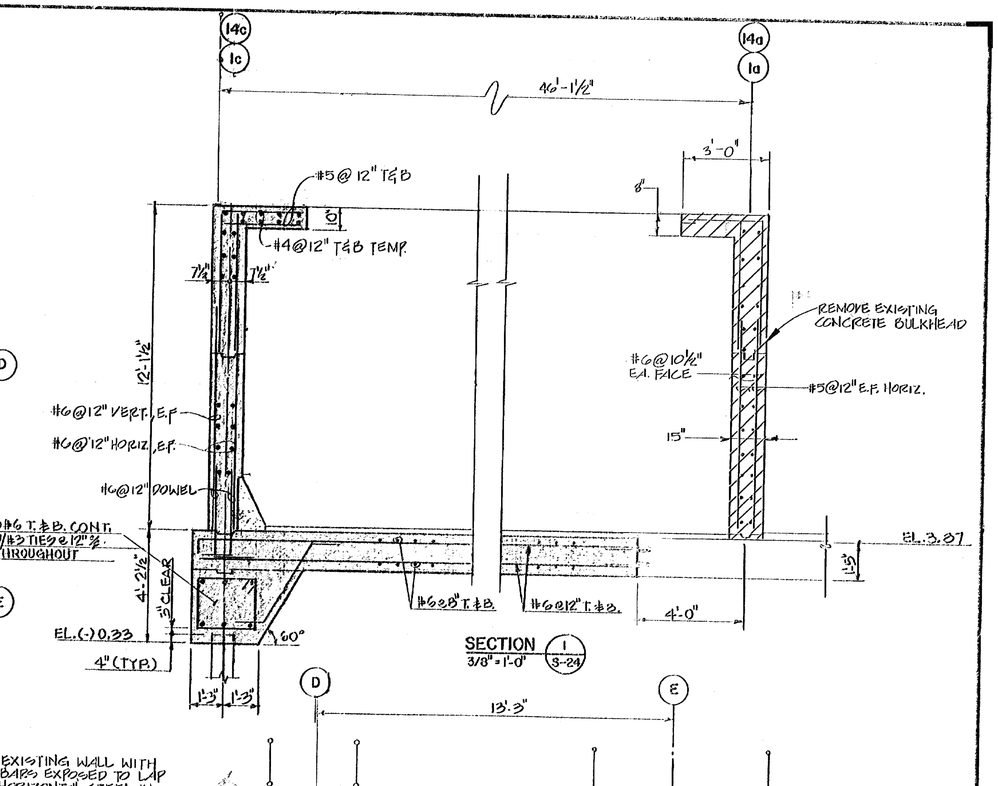

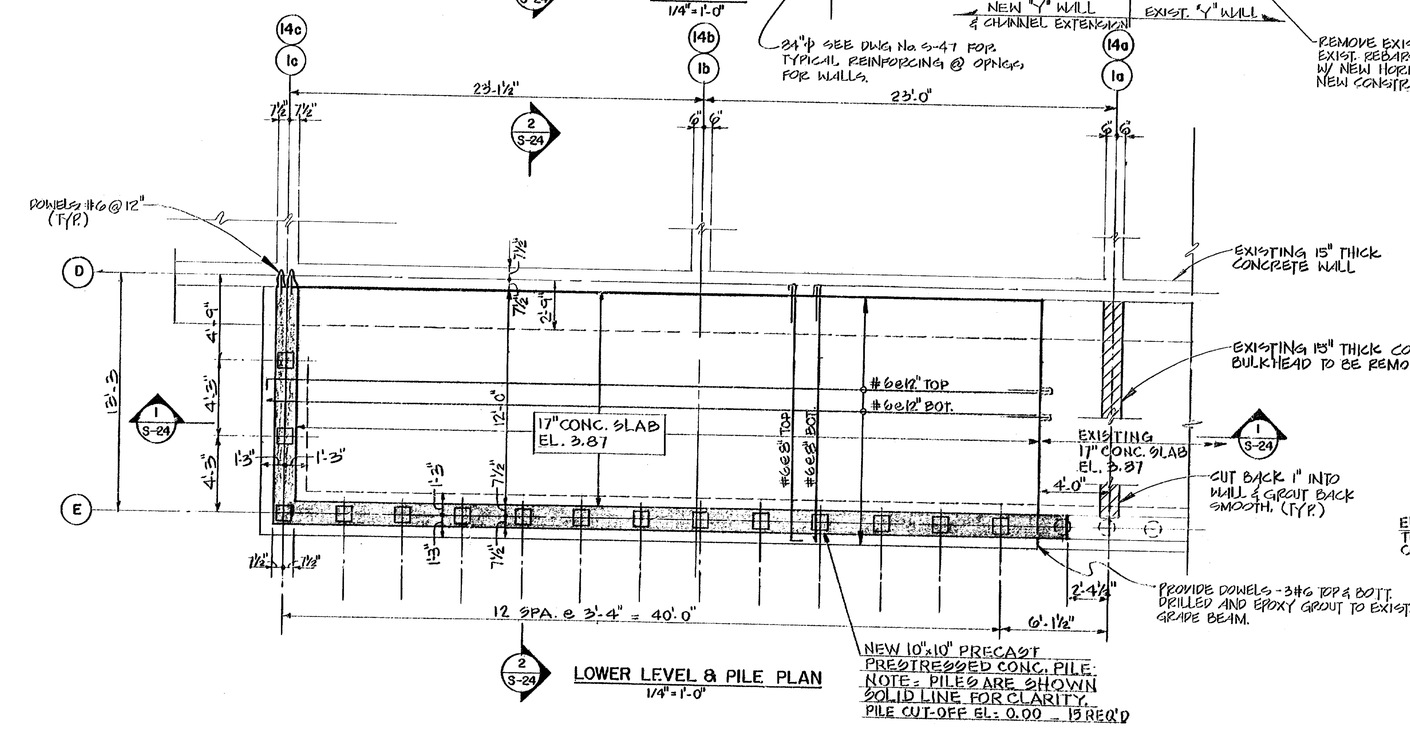

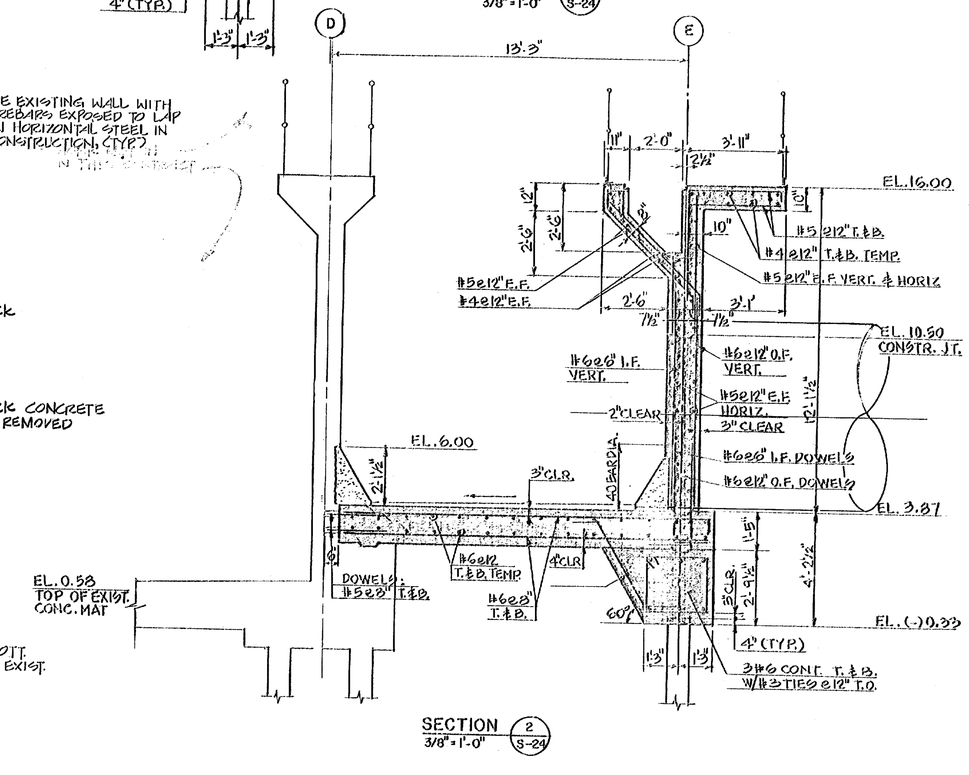

NOTE: ALL CONCRETE SHALL BE CLASS "A"

NO.	DATE	ISSUED FOR	BY
	DEC. 21, 1984	ADDENDUM No. 2	

DESIGNED A.M.W.
DRAWN S.B.
CHECKED A.M.W.
APPROVED J.N.R.

P.E.

POST, BUCKLEY, SCHUH & JERNIGAN INC.
CONSULTING ENGINEERS & PLANNERS
HAZEN AND SAWYER, P.C.
CONSULTING ENGINEERS
MIAMI
A JOINT VENTURE
078-001 8340

MIAMI-DADE WATER AND SEWER AUTHORITY

UPGRADING OF EXISTING CENTRAL DISTRICT WASTEWATER TREATMENT PLANT
VIRGINIA KEY, DADE COUNTY, FLORIDA

STRUCTURAL
AERATION TANKS
EFFLUENT CHANNEL ADDITION
PLANS, SECTIONS AND DETAILS

CONTRACT NUMBER(S) S-265
EPA C120429130
DATE MAR. 15, 1984
DWG. S-24
SHEET 28 OF 74
REF NO. S-7772-A

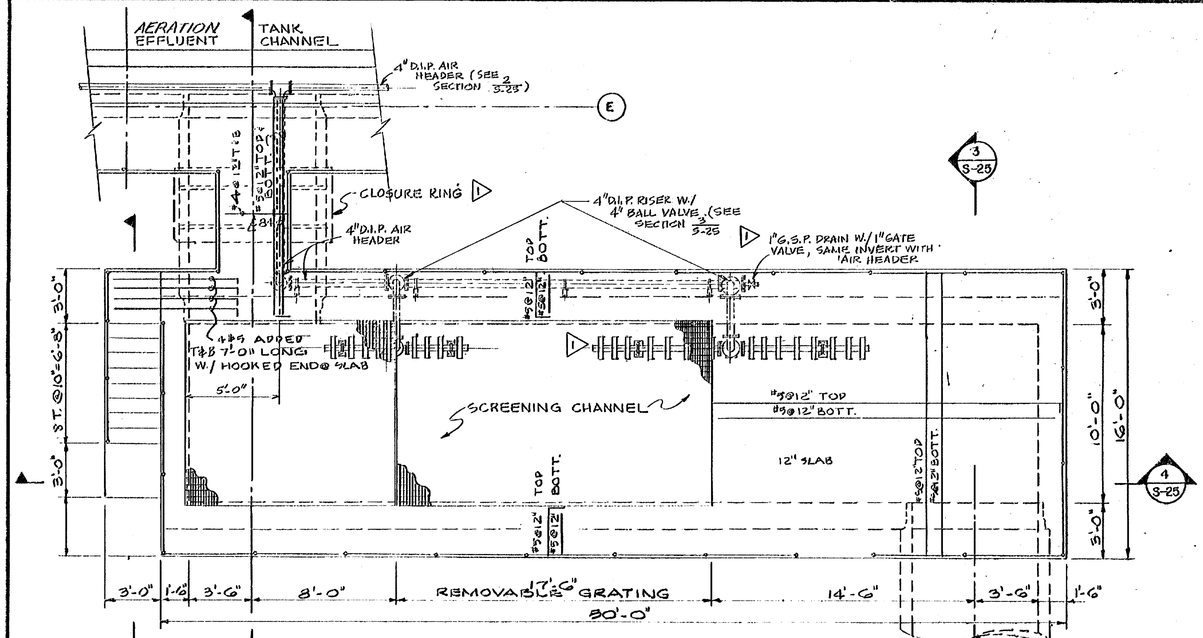

UPPER LEVEL PLAN
1/4"=1'-0"

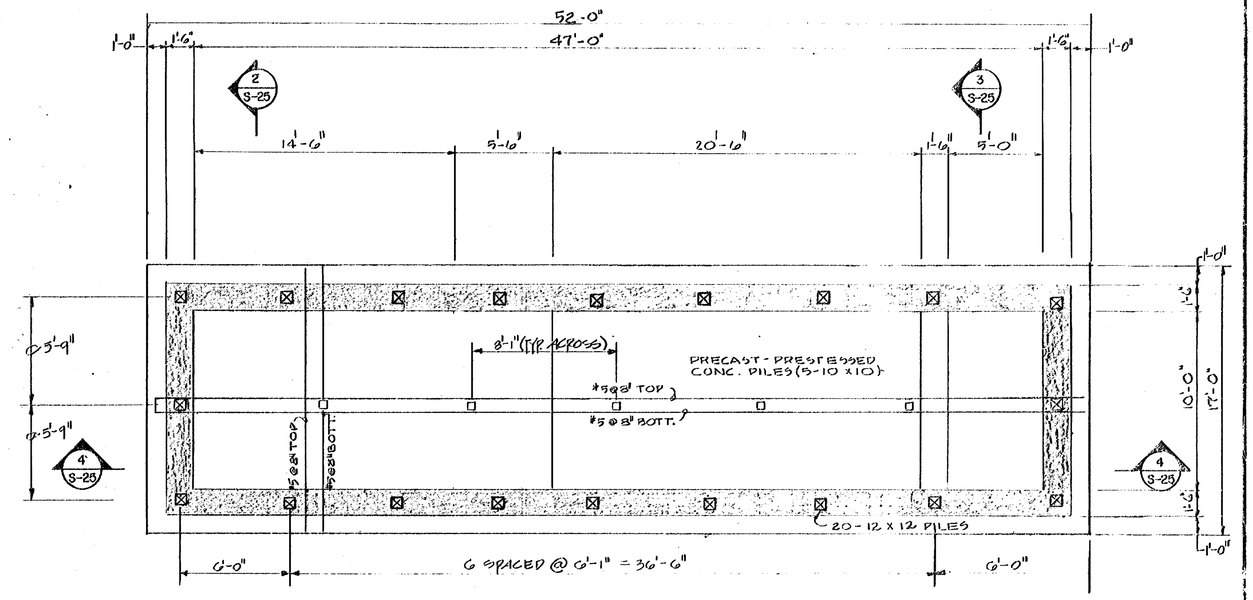

FOUNDATION PLAN
1/4"=1'-0"

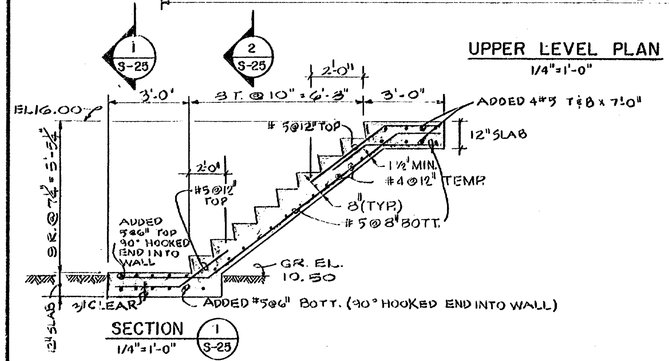

SECTION 1/S-25
1/4"=1'-0"

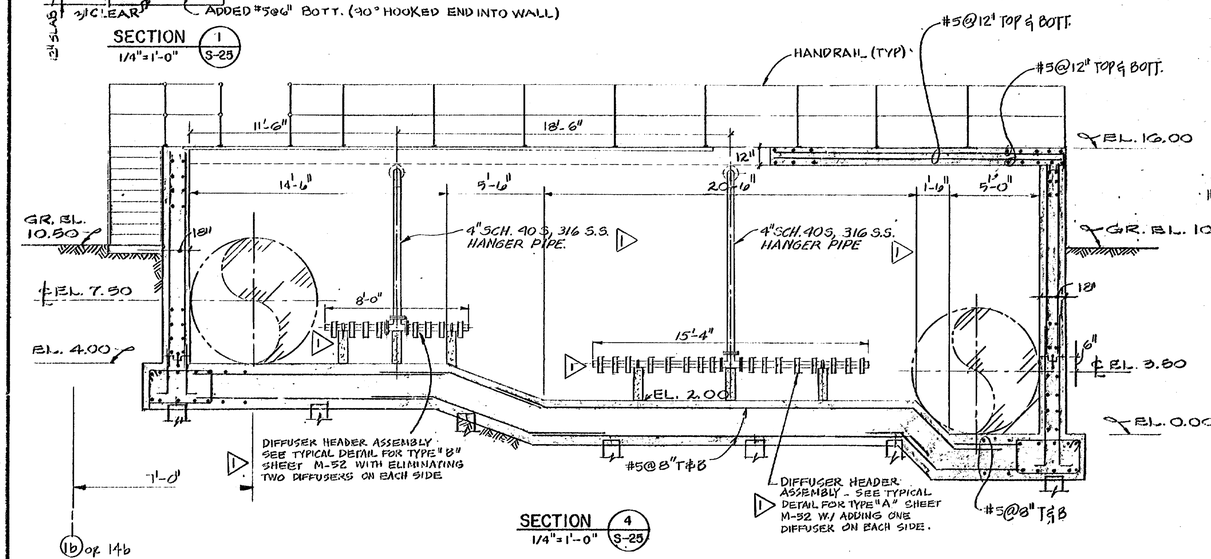

SECTION 4/S-25
1/4"=1'-0"

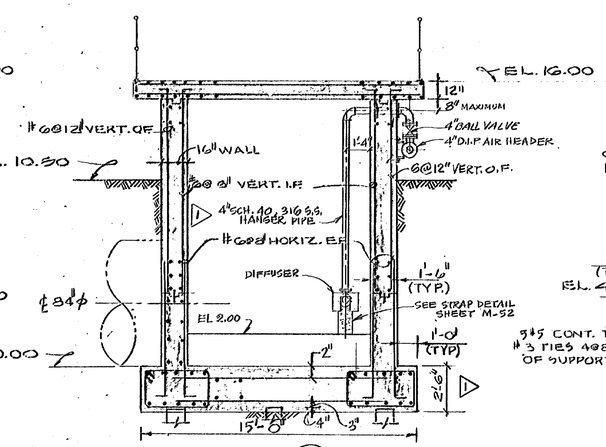

SECTION 3/S-25
1/4"=1'-0"

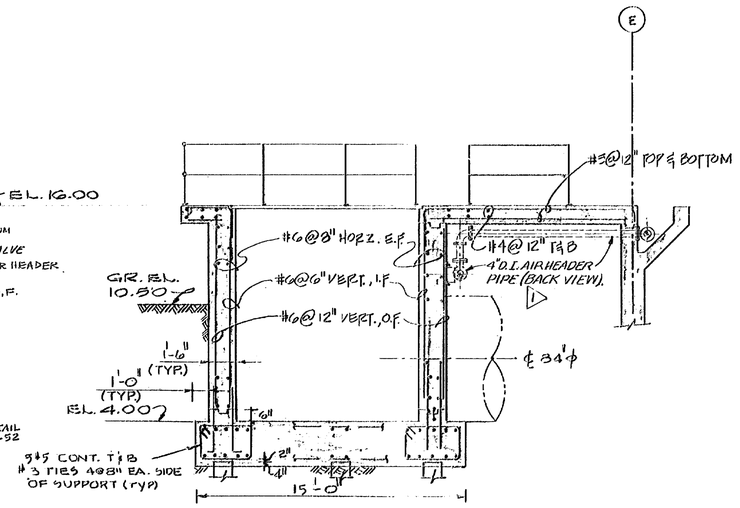

SECTION 2/S-25
1/4"=1'-0"

NO.	DATE	ISSUED FOR	BY
1	DEC. 21, 1984	ADDENDUM NO. 2	

DESIGNED A.M.W.
DRAWN N.K.N.
CHECKED A.M.W.
APPROVED J.N.R.

P.E.

POST, BUCKLEY, SCHUH & JERNIGAN INC.
CONSULTING ENGINEERS & PLANNERS
HAZEN AND SAWYER P.C.
CONSULTING ENGINEERS
MIAMI
078-001 8940
A JOINT VENTURE

MIAMI-DADE WATER AND SEWER AUTHORITY

UPGRADING OF EXISTING CENTRAL DISTRICT WASTEWATER TREATMENT PLANT
VIRGINIA KEY, DADE COUNTY, FLORIDA

STRUCTURAL
SCREENING FACILITIES
PLANS, SECTIONS AND DETAILS

CONTRACT NUMBER(S) S-285
EPA C120429130
DATE MAR. 15, 1984
DWG S-25
SHEET 29 OF 74
REF. NO. S-7773-A

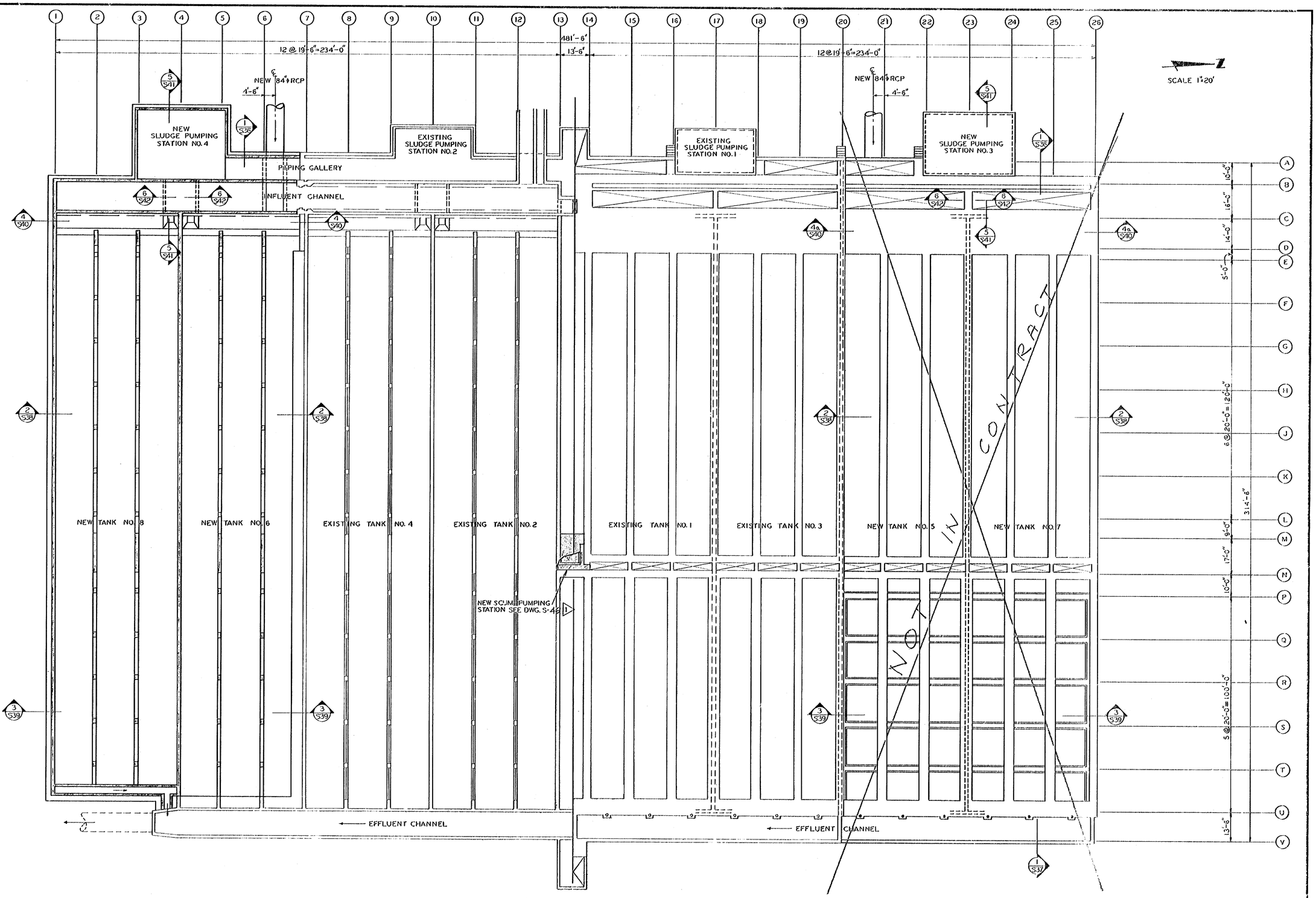

GENERAL PLAN
1" = 20'-0"

NO.	DATE	ISSUED FOR	BY
1	DEC. 21, 1984	ADDENDUM No. 2	

DESIGNED DAC
DRAWN WMM
CHECKED WEB
APPROVED _____ P.E.

POST, BUCKLEY, SCHUH & JERNIGAN INC.
CONSULTING ENGINEERS & PLANNERS
HAZEN AND SAWYER, P.C.
CONSULTING ENGINEERS
MIAMI

A JOINT VENTURE

079-001 8940

MIAMI-DADE WATER AND SEWER AUTHORITY

UPGRADING OF EXISTING CENTRAL DISTRICT WASTEWATER TREATMENT PLANT
VIRGINIA KEY, DADE COUNTY, FLORIDA

FINAL SETTLING TANKS
GENERAL PLAN

CONTRACT NUMBER(S) S-285
EPA C120429130
DATE MARCH 15, 1984

DWG. S-26
SHEET 30 OF 74
REF NO. S-7774-A

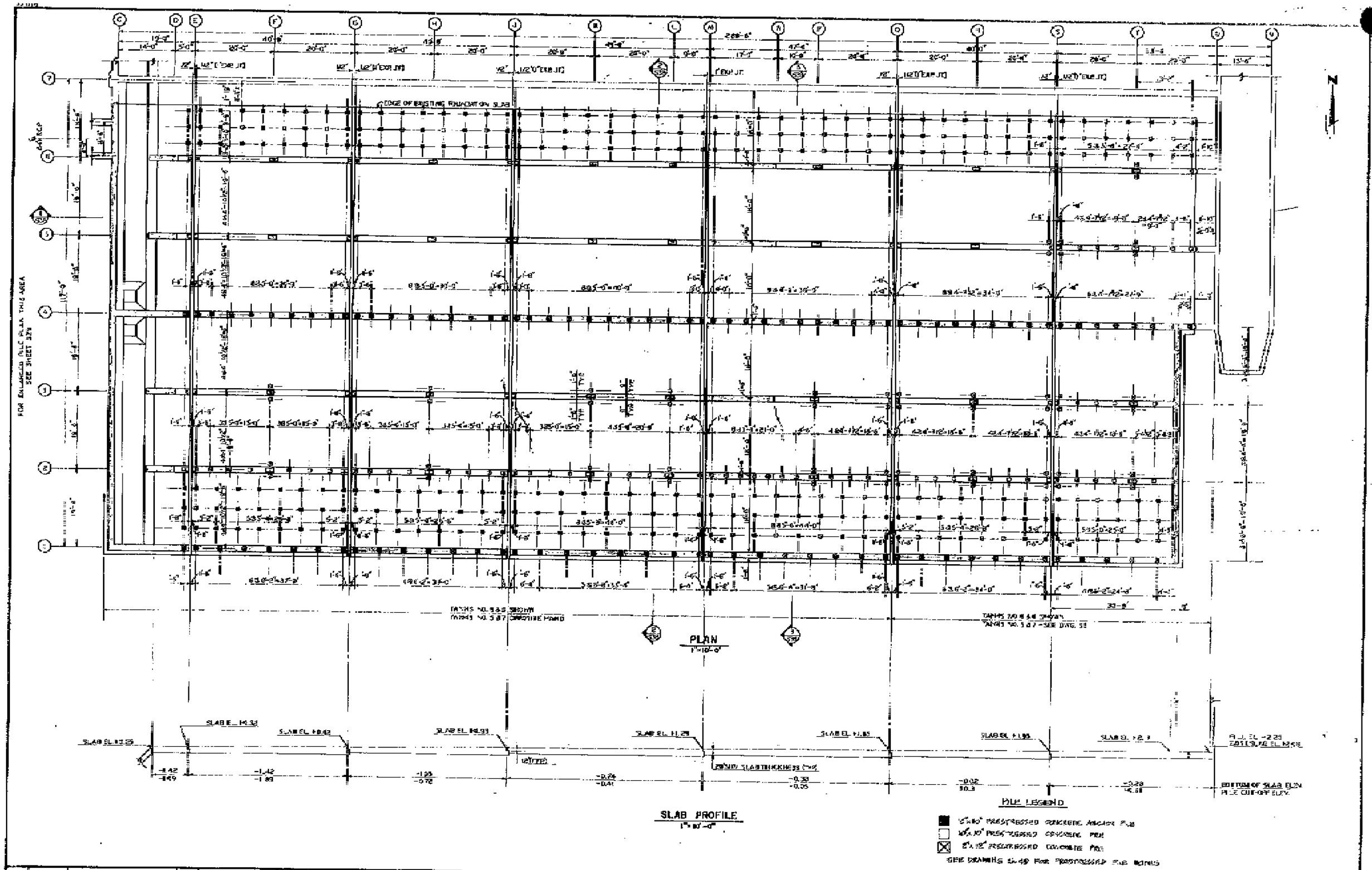

1	Sep. 2, 1983	ADDENDUM NO. 2	
NO.	DATE	REVISION FOR	BY

CHECKED: BGC
DRAWN: [illegible]
CHECKED: [illegible]
APPROVED:

POST, BUCKLEY, SCHUH & JERNIGAN INC.
CONSULTING ENGINEERS & PLANNERS
HAZEN AND SAWYER, P.C.
CONSULTING ENGINEERS

MIAMI-DADE WATER AND SEWER AUTHORITY

UPGRADING OF EXISTING CENTRAL DISTRICT WASTEWATER TREATMENT PLANT
VIRGINIA KEY, DADE COUNTY, FLORIDA

FINAL SETTLING TANKS
FOUNDATION PLAN AND PILE PLAN
SHEET 1

CONTRACT NUMBER: S-288
EPA: C120929130
DATE: MARCH 15, 1984

DWG. S-27
SHEET 31 OF 74
SHEETS S-2775-A

A.F. 19243

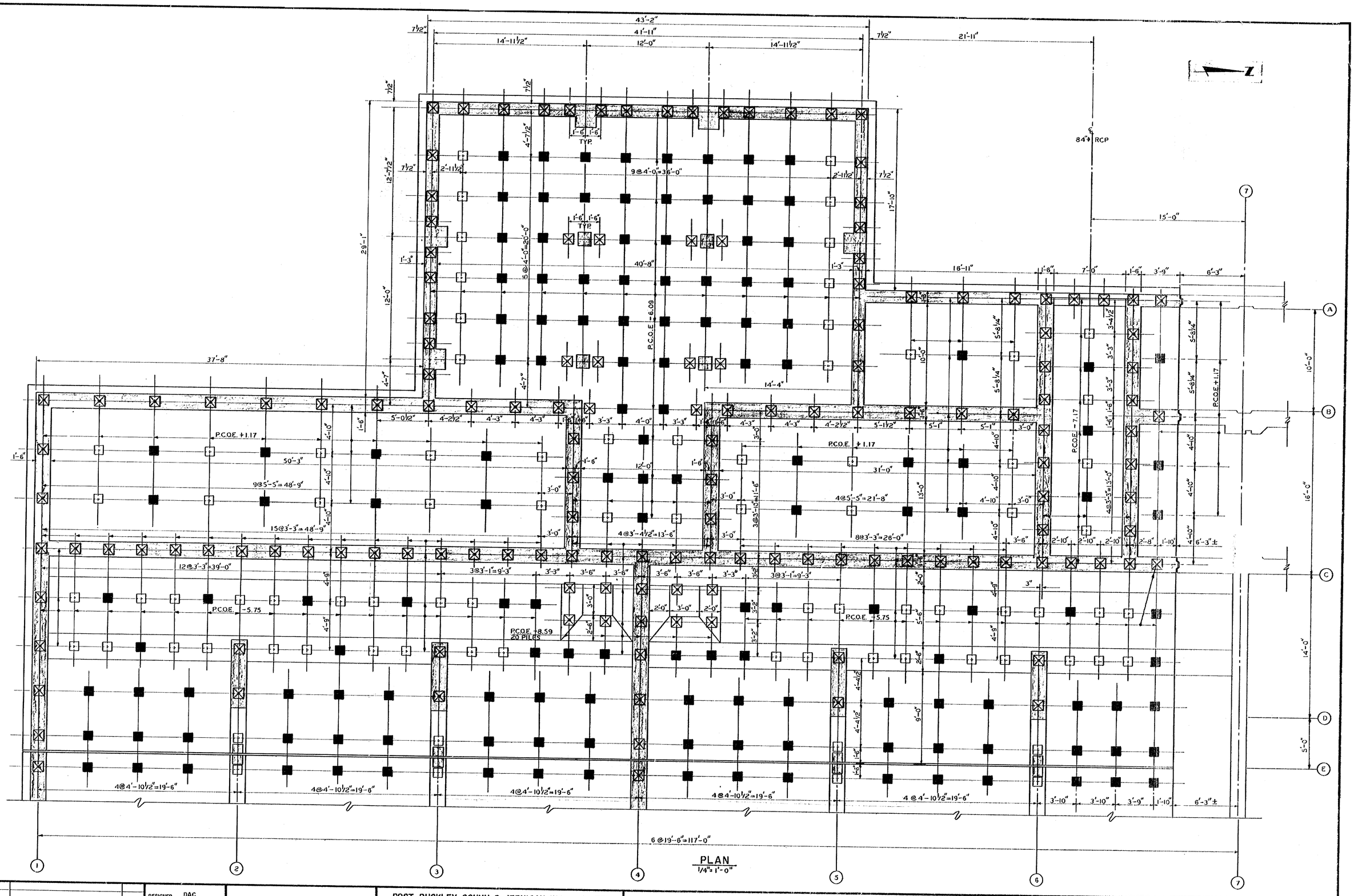

PLAN
1/4"=1'-0"

NO.	DATE	ISSUED FOR	BY

DESIGNED DAC
DRAWN WMM
CHECKED WEB
APPROVED

P.E.

POST, BUCKLEY, SCHUH & JERNIGAN INC.
CONSULTING ENGINEERS & PLANNERS
HAZEN AND SAWYER, P.C.
CONSULTING ENGINEERS
MIAMI

A JOINT VENTURE

078-001 8940

MIAMI-DADE WATER AND SEWER AUTHORITY

UPGRADING OF EXISTING CENTRAL DISTRICT WASTEWATER TREATMENT PLANT
VIRGINIA KEY, DADE COUNTY, FLORIDA

FINAL SETTLING TANKS
ENLARGED PILE PLAN
SLUDGE PUMP STATION
AND INFLUENT CHANNEL

CONTRACT NUMBER(S) S-285
EPA C120429130
DATE MARCH 15, 1984

DWG. S-29
SHEET 32 OF 74
REF. NO. S-7777-A

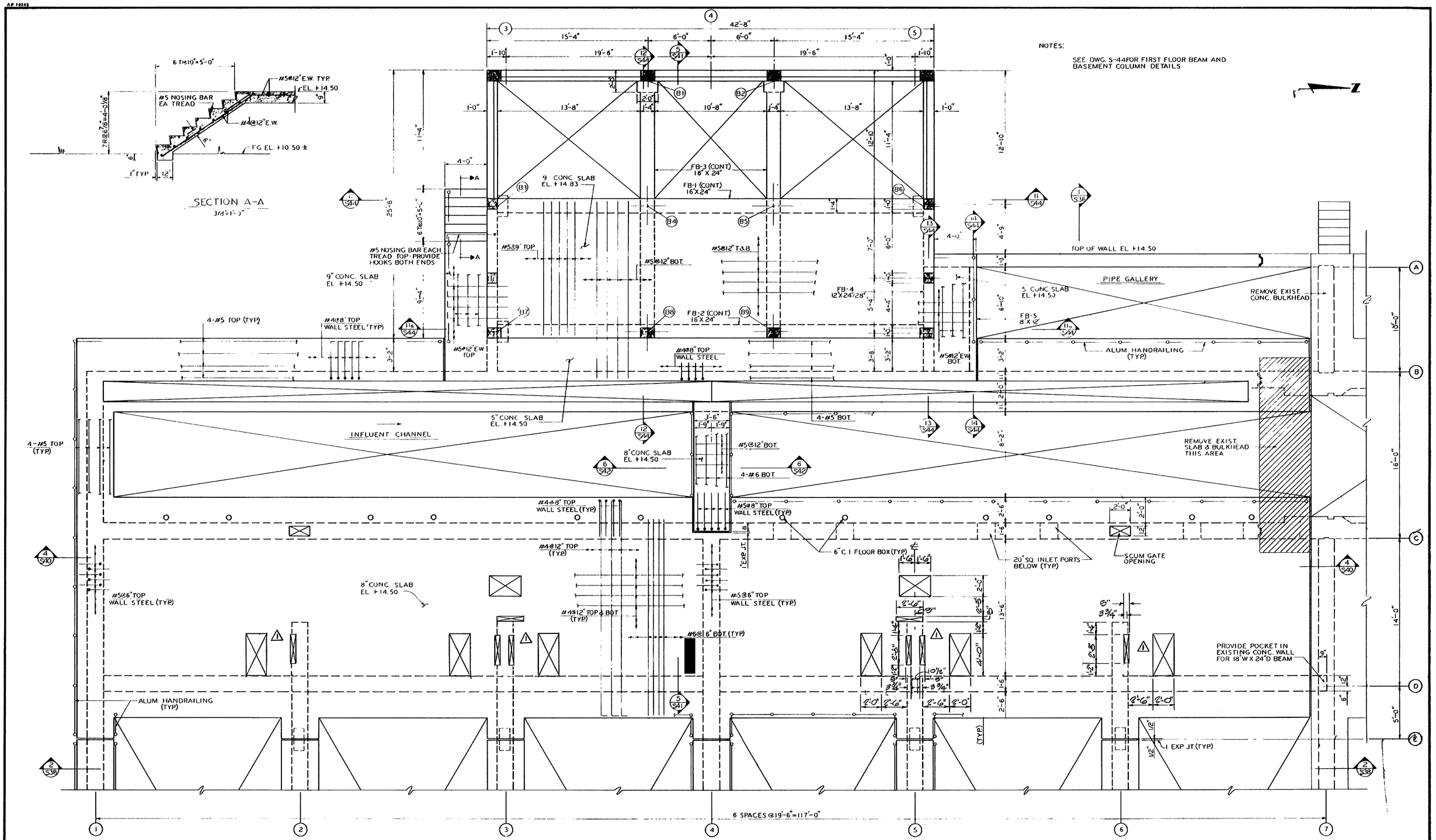

PLAN
1/4" = 1'-0"

NO.	DATE	ISSUED FOR	BY
1	AUG. 21, 1980	Revised to allow Interchangeability of collector equipment parts.	R.V.

DESIGNED DAC
DRAWN WMM
CHECKED WEB
APPROVED
P.E.

POST, BUCKLEY, SCHUH & JERNIGAN INC.
CONSULTING ENGINEERS & PLANNERS
HAZEN AND SAWYER, P.C.
CONSULTING ENGINEERS
A JOINT VENTURE
MIAMI 078-001 8940

MIAMI-DADE WATER AND SEWER AUTHORITY

UPGRADING OF EXISTING CENTRAL DISTRICT WASTEWATER TREATMENT PLANT
VIRGINIA KEY, DADE COUNTY, FLORIDA

FINAL SETTLING TANKS
ENLARGED TOP PLAN
SLUDGE PUMP STATION TO E

CONTRACT NUMBER(S) S-285
EPA C120429130
DATE MARCH 15, 1984

DWG. S-30
SHEET 39 OF 74
REF. NO. S-7778-A

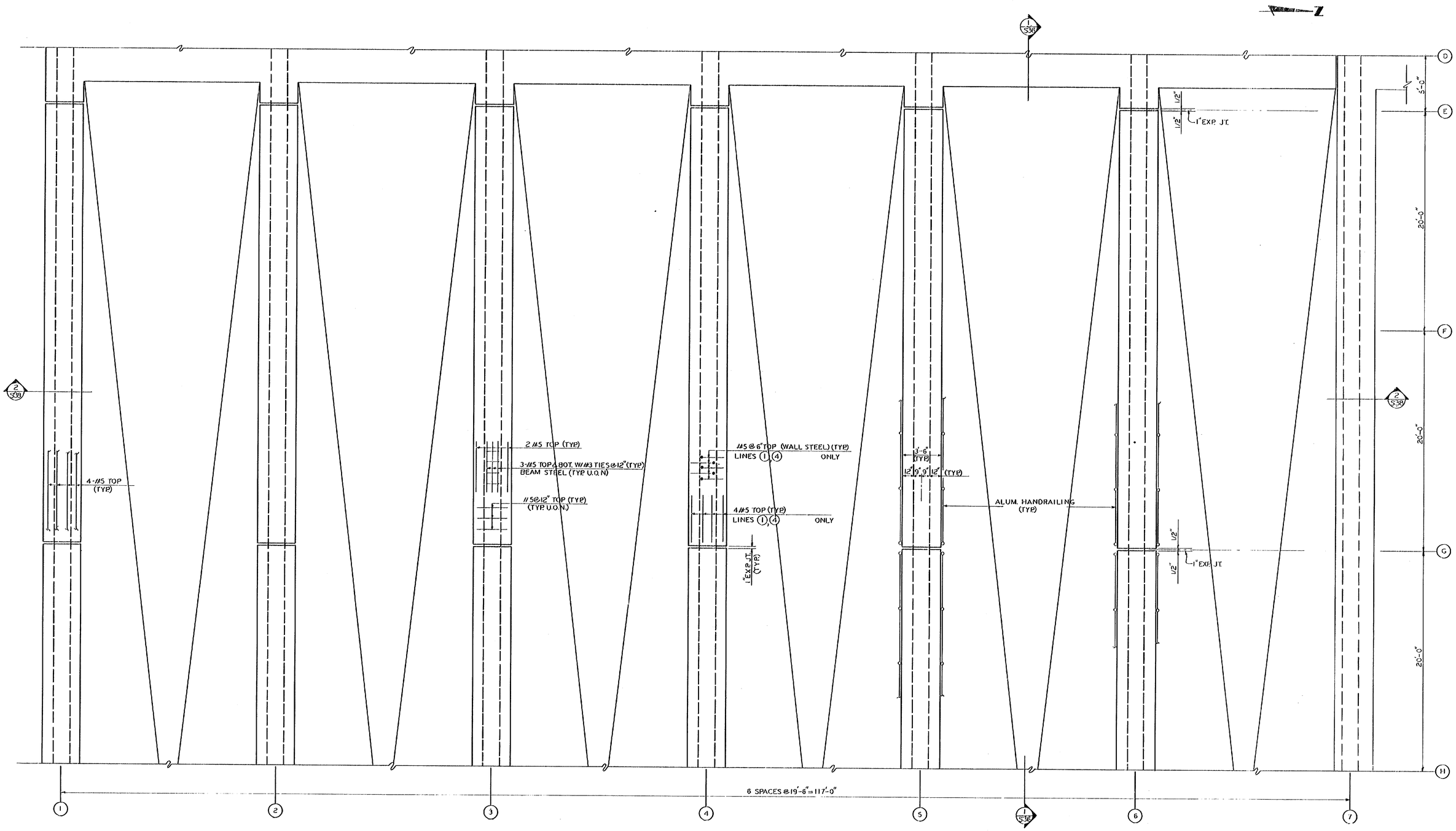

PLAN
1/4" = 1'-0"

NO.	DATE	ISSUED FOR	BY

DESIGNED DAC
DRAWN WMM
CHECKED WEB
APPROVED

P.E.

POST, BUCKLEY, SCHUH & JERNIGAN INC.
CONSULTING ENGINEERS & PLANNERS
HAZEN AND SAWYER, P.C.
CONSULTING ENGINEERS
A JOINT VENTURE
MIAMI 073-001 8940

MIAMI-DADE WATER AND SEWER AUTHORITY

UPGRADING OF EXISTING CENTRAL DISTRICT WASTEWATER TREATMENT PLANT
VIRGINIA KEY, DADE COUNTY, FLORIDA

FINAL SETTLING TANKS
ENLARGED TOP PLAN
E TO H

CONTRACT NUMBER(S) S-285
EPA C120429130
DATE MARCH 15, 1984

DWG. S-31
SHEET 34 OF 74
REF. NO. S-7779-A

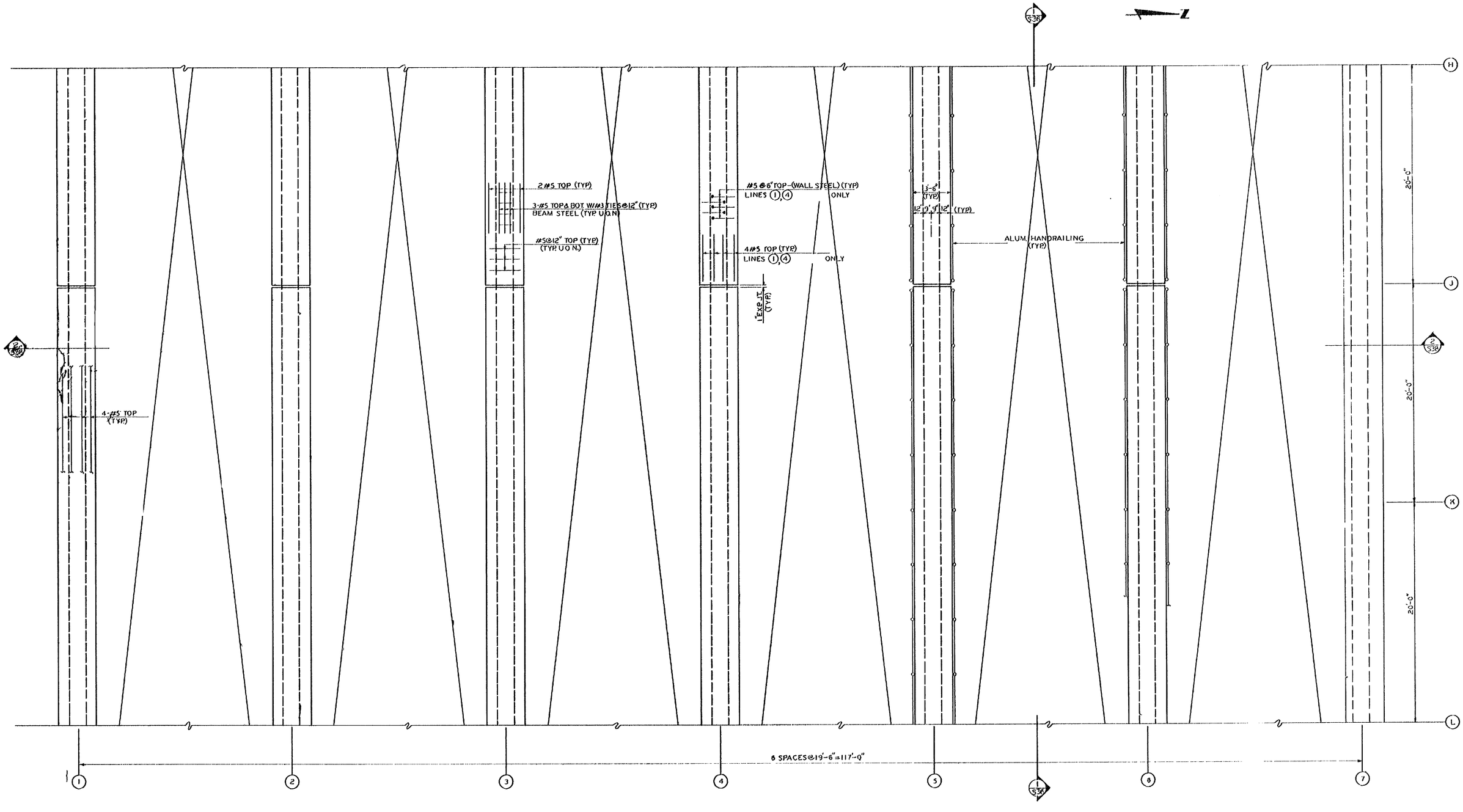

PLAN
1/4" = 1'-0"

NO	DATE	ISSUED FOR	BY

DESIGNED DAC
DRAWN WMM
CHECKED WEB
APPROVED

P.E.

POST, BUCKLEY, SCHUH & JERNIGAN INC.
CONSULTING ENGINEERS & PLANNERS
HAZEN AND SAWYER, P.C.
CONSULTING ENGINEERS
MIAMI 078-001 8940

MIAMI-DADE WATER AND SEWER AUTHORITY
UPGRADING OF EXISTING CENTRAL DISTRICT WASTEWATER TREATMENT PLANT
VIRGINIA KEY, DADE COUNTY, FLORIDA

FINAL SETTLING TANKS
ENLARGED TOP PLAN
H TO L

CONTRACT NUMBER(S) S-285
EPA C120429130
DATE MARCH 15, 1984

DWG S-32
SHEET 35 OF 74
REF. NO. S-7780-A

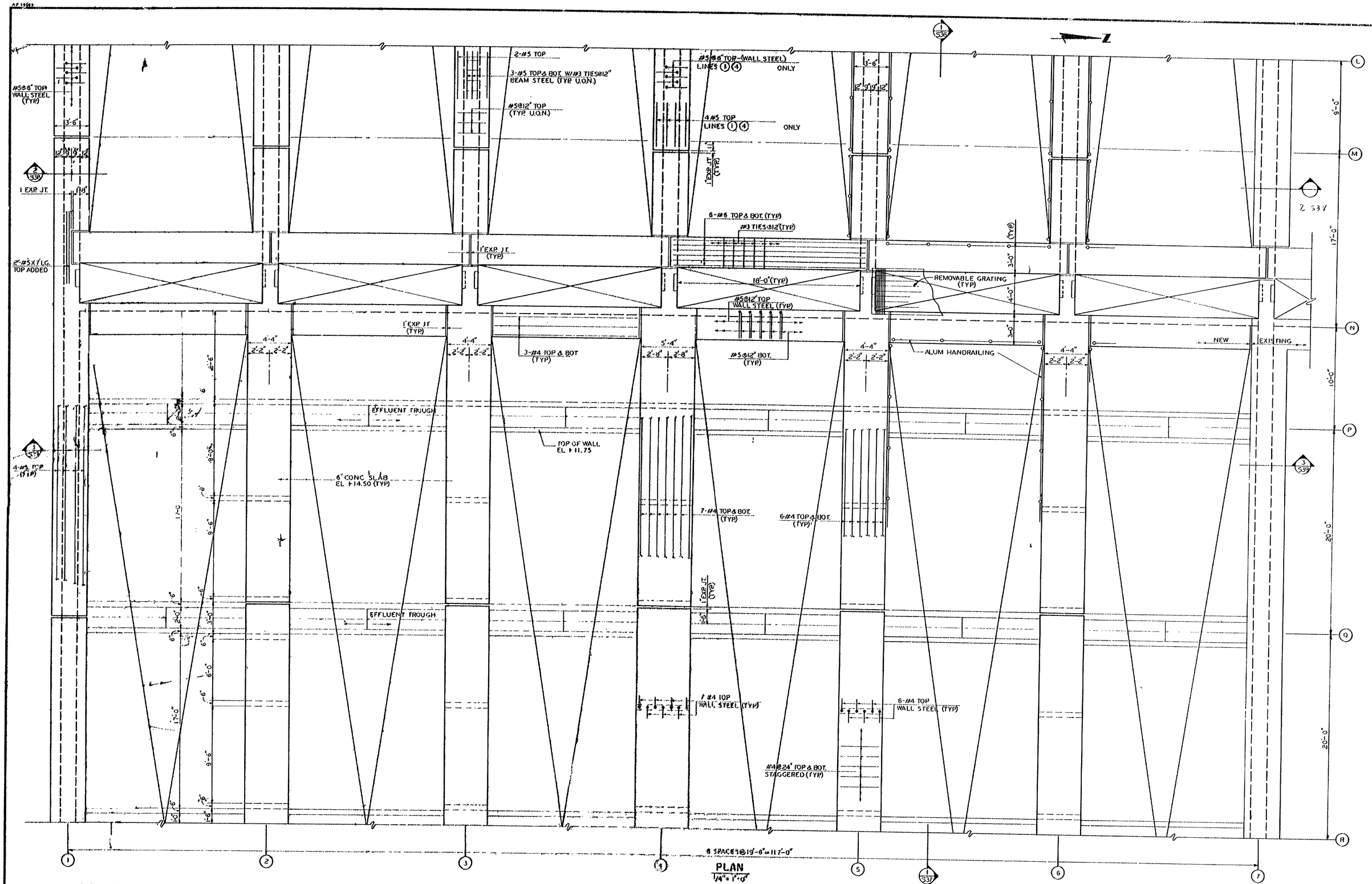

PLAN
1/4" = 1'-0"

DESIGNED	DAC
DRAWN	WMM

POST, BUCKLEY, SCHUH & JERNIGAN INC.
CONSULTING ENGINEERS & PLANNERS

MIAMI-DADE WATER AND SEWER AUTHORITY

CONTRACT NUMBER(S)

S-33

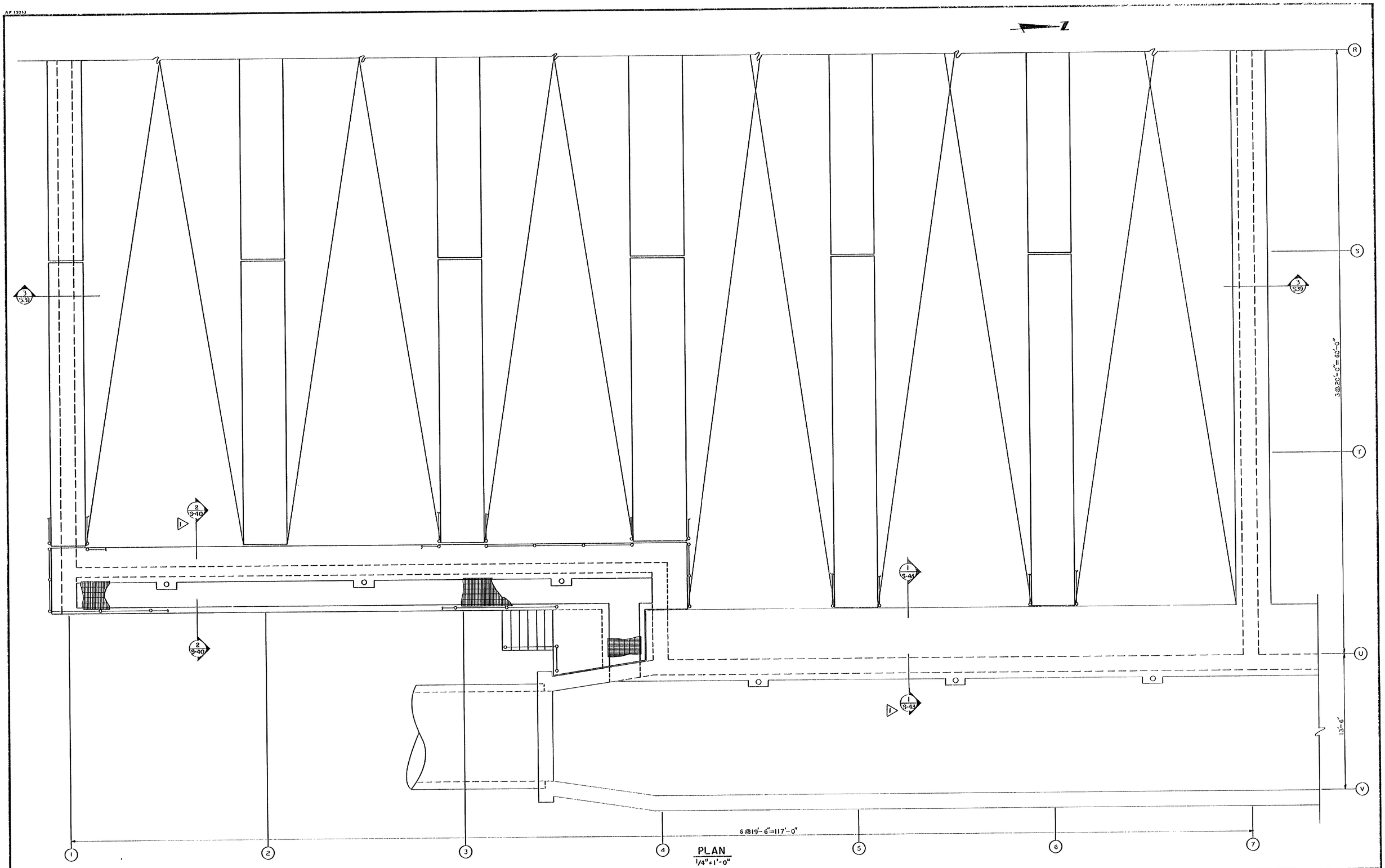

PLAN
1/4"=1'-0"

NO	DATE	ISSUED FOR	BY
1	DEC. 21, 1984	ADDENDUM No. 2	

DESIGNED DAC
DRAWN WMM
CHECKED WEB
APPROVED

P.E.

POST, BUCKLEY, SCHUH & JERNIGAN INC.
CONSULTING ENGINEERS & PLANNERS
HAZEN AND SAWYER, P.C.
CONSULTING ENGINEERS
MIAMI 078-001 8940

A JOINT VENTURE

MIAMI-DADE WATER AND SEWER AUTHORITY

UPGRADING OF EXISTING CENTRAL DISTRICT WASTEWATER TREATMENT PLANT
VIRGINIA KEY, DADE COUNTY, FLORIDA

FINAL SETTLING TANKS
ENLARGED TOP PLAN
R TO V TANKS NO. 6 & 8

CONTRACT NUMBER(S) S-285
EPA C120429130
DATE MARCH 15, 1984

DWG S-35
SHEET 37 OF 74
REF NO S-7783-A

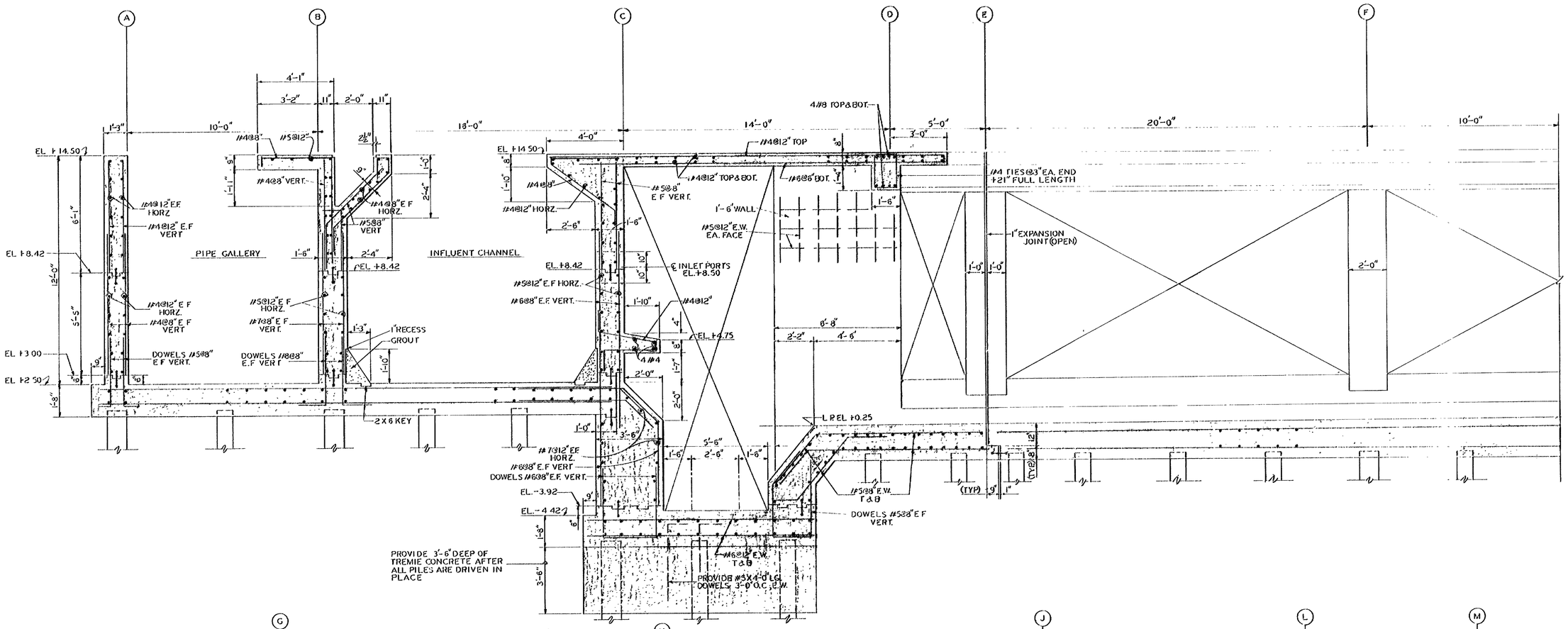

SECTION
3/8" = 1'-0"
1/327 1/330 1/331 1/332 1/333 1/340

NO.	DATE	ISSUED FOR	BY
1	DEC. 21, 1984	ADDENDUM No. 2	

DESIGNED DAC
DRAWN WMM
CHECKED WEB
APPROVED _____ PE

POST, BUCKLEY, SCHUH & JERNIGAN INC.
CONSULTING ENGINEERS & PLANNERS
HAZEN AND SAWYER, P.C.
CONSULTING ENGINEERS
MIAMI 078-001 8940

MIAMI-DADE WATER AND SEWER AUTHORITY

UPGRADING OF EXISTING CENTRAL DISTRICT WASTEWATER TREATMENT PLANT
VIRGINIA KEY, DADE COUNTY, FLORIDA

FINAL SETTLING TANKS
LONGITUDINAL SECTION
A TO M

CONTRACT NUMBER(S) S-285
EPA C120429130
DATE MARCH 15, 1984

DWG S-36
SHEET 38 OF 74
REF. NO S-7784-A

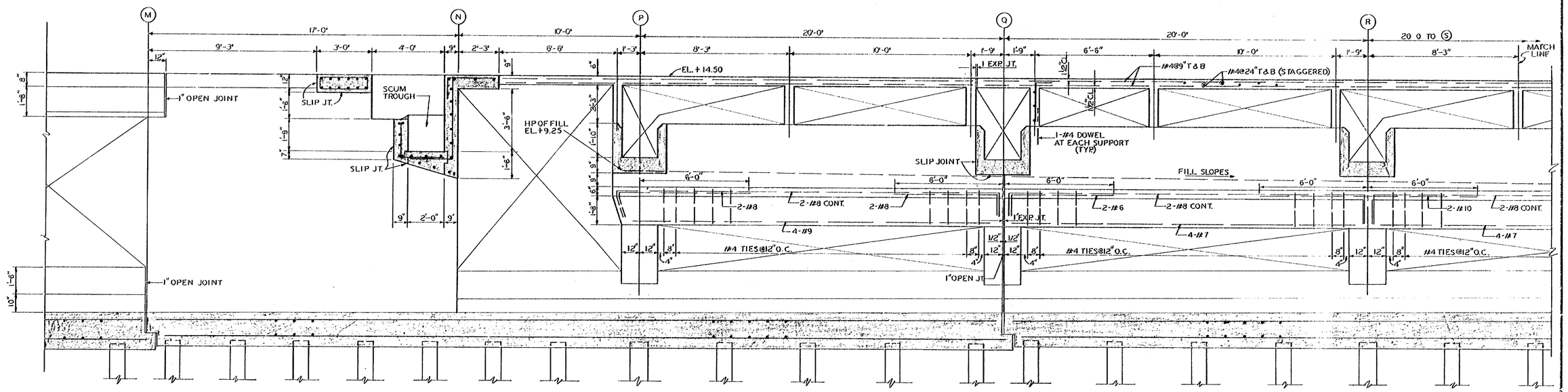

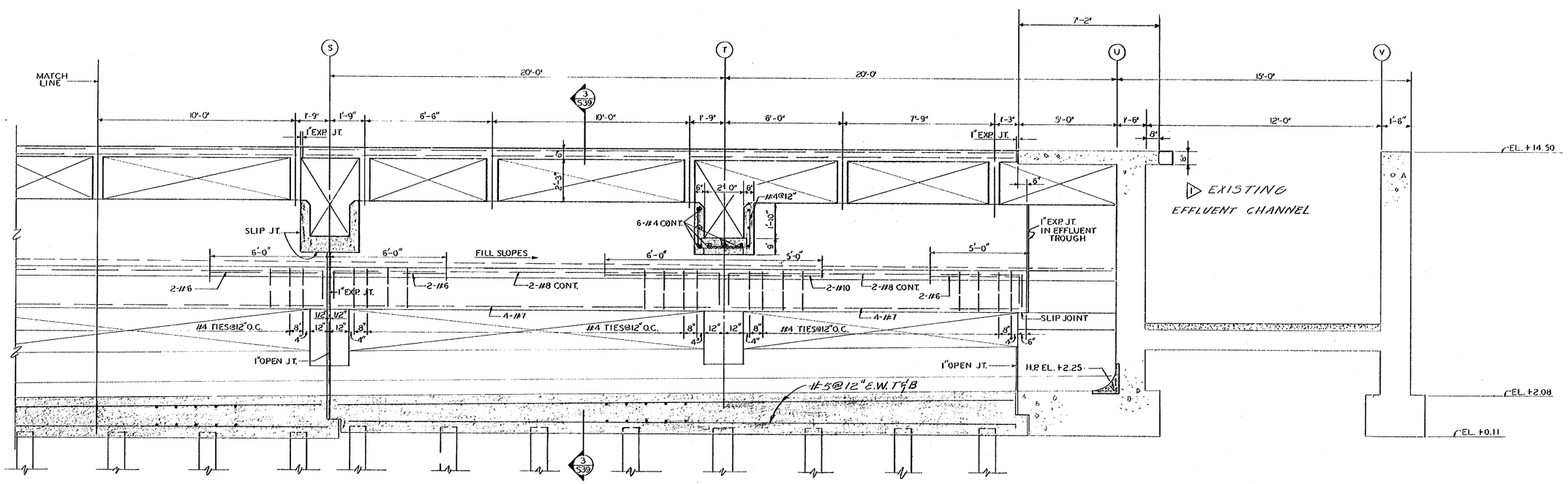

SECTION 1/333
3/8" = 1'-0"

NO.	DATE	ISSUED FOR	BY
1	DEC. 21, 1948	ADDENDUM NO. 2	

DESIGNED DAC
DRAWN WMM
CHECKED WEB
APPROVED
P.E.

POST, BUCKLEY, SCHUH & JERNIGAN INC.
CONSULTING ENGINEERS & PLANNERS
HAZEN AND SAWYER, P.C.
CONSULTING ENGINEERS
A JOINT VENTURE
MIAMI 078-001 8940

MIAMI-DADE WATER AND SEWER AUTHORITY

UPGRADING OF EXISTING CENTRAL DISTRICT WASTEWATER TREATMENT PLANT
VIRGINIA KEY, DADE COUNTY, FLORIDA

FINAL SETTLING TANKS
LONGITUDINAL SECTION
M TO V

CONTRACT NUMBER(S) S-285
EPA C120429130
DATE MARCH 15, 1984

DWG. S-37
SHEET 39 OF 74
REF. NO. S-7785-A

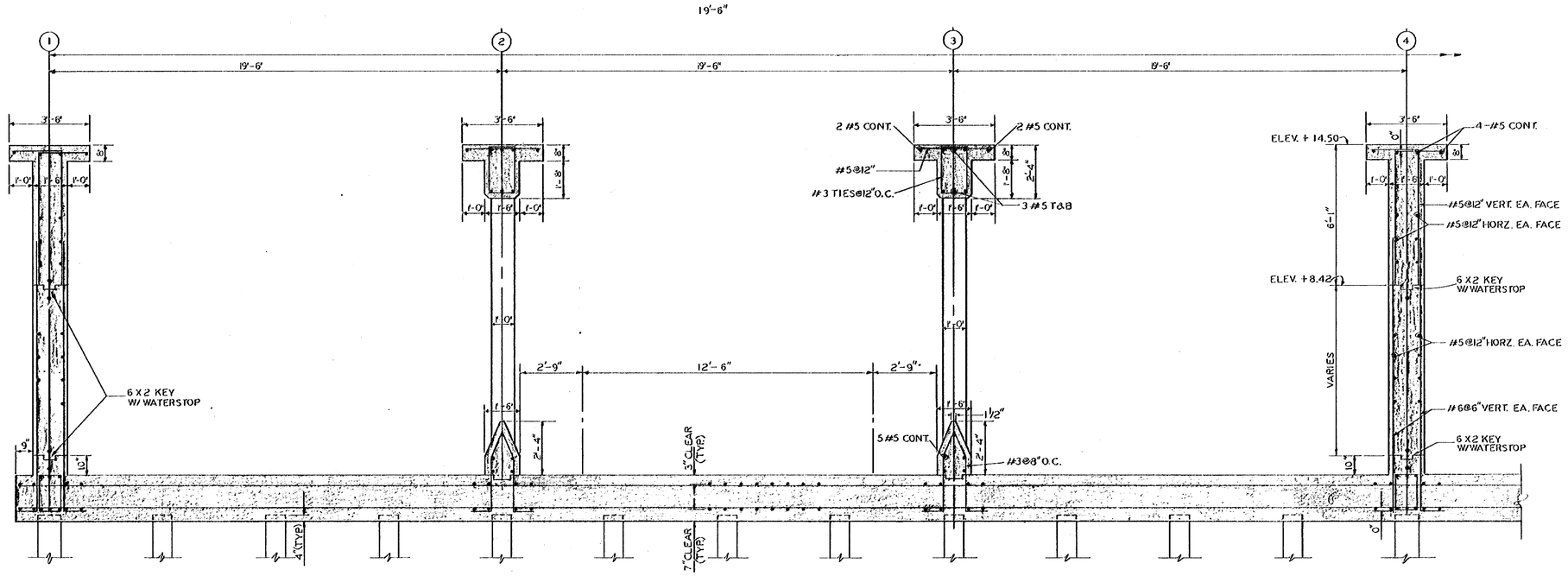

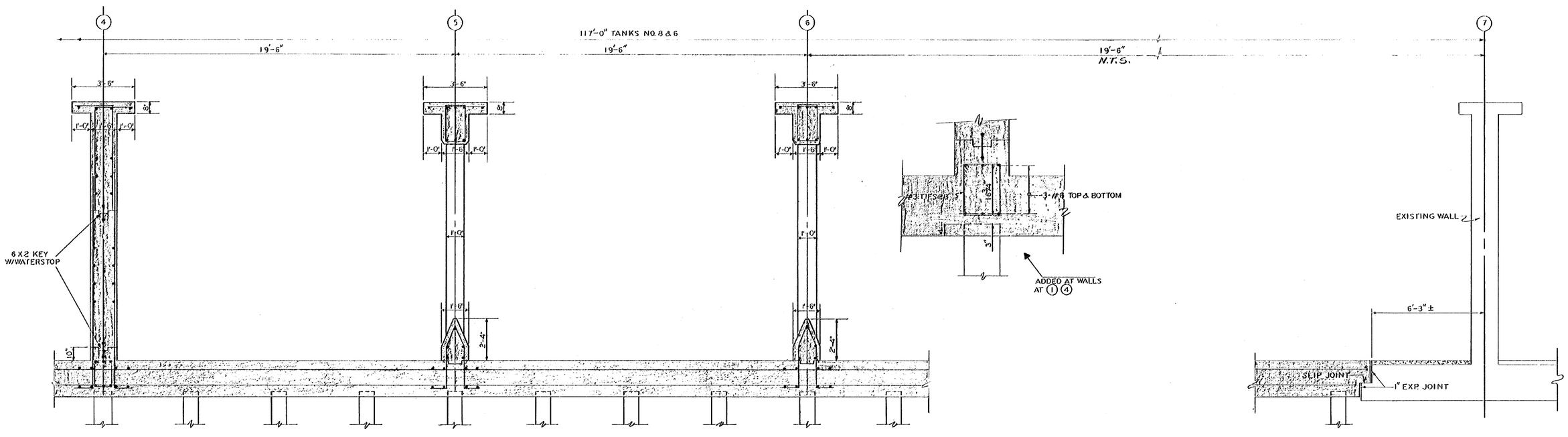

SECTION 2/326 2/327 2/330 2/331 2/332 2/333 2/336
3/8" = 1'-0"

NO.	DATE	ISSUED FOR	BY

DESIGNED DAC
DRAWN WMM
CHECKED WEB
APPROVED

P.E.

POST, BUCKLEY, SCHUH & JERNIGAN INC.
CONSULTING ENGINEERS & PLANNERS
HAZEN AND SAWYER, P.C.
CONSULTING ENGINEERS
MIAMI 078-001 8940

MIAMI-DADE WATER AND SEWER AUTHORITY

UPGRADING OF EXISTING CENTRAL DISTRICT WASTEWATER TREATMENT PLANT
VIRGINIA KEY, DADE COUNTY, FLORIDA

FINAL SETTLING TANKS
CROSS SECTION
INFLUENT END

CONTRACT NUMBER(S) S-285
EPA C120429130
DATE MARCH 15, 1984

DWG. S-38
SHEET 40 OF 74
REF. NO. S-7786-A

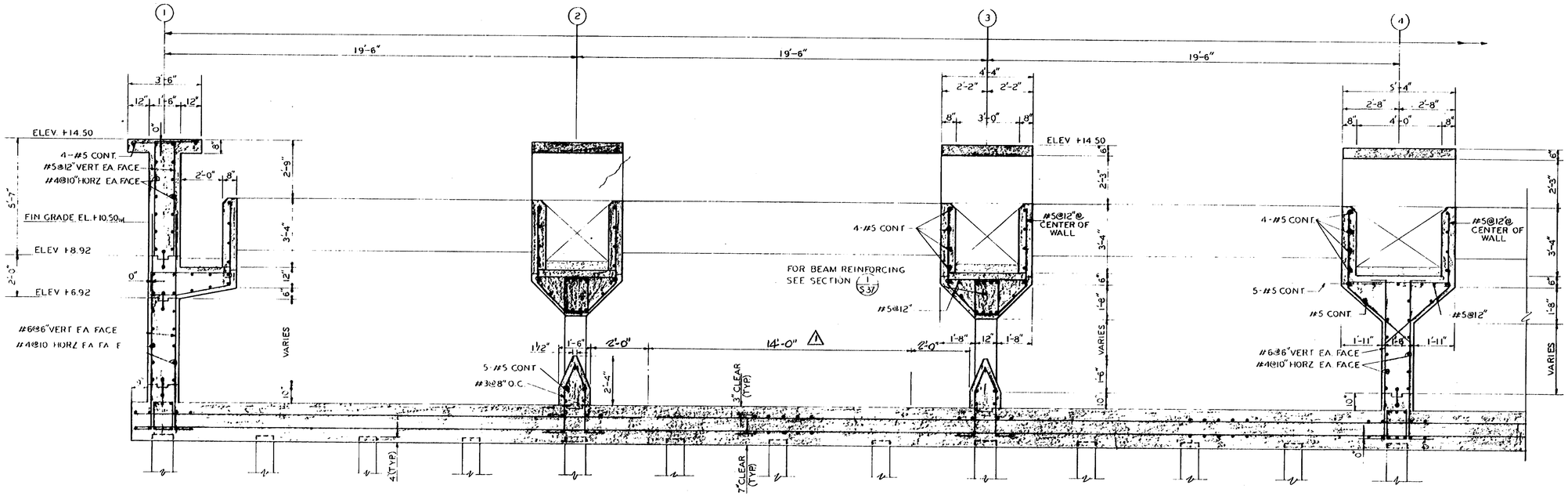

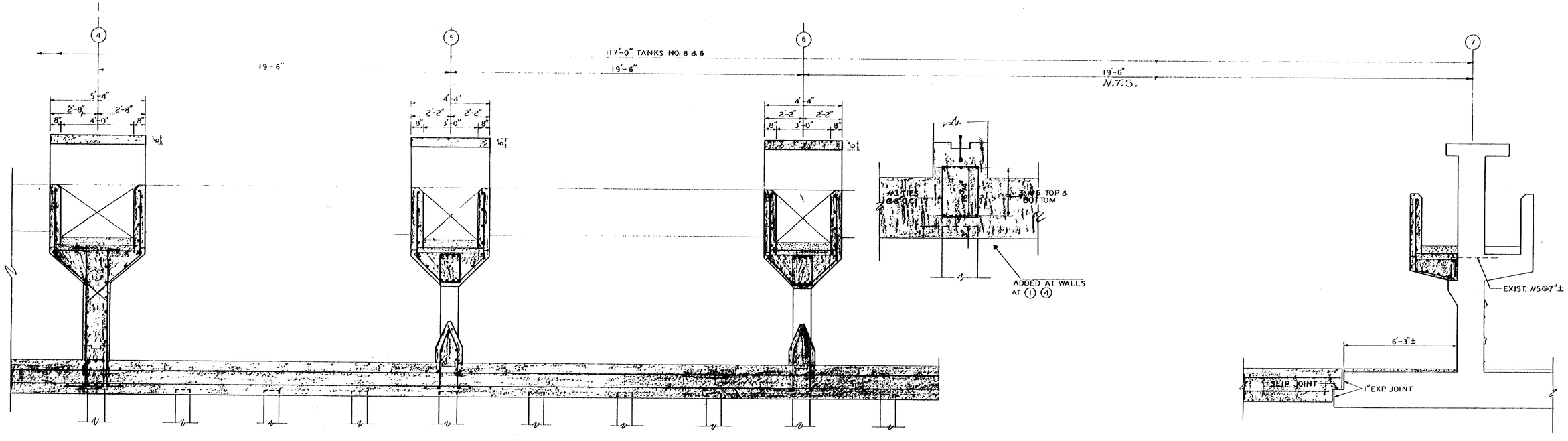

SECTION 3/S26 3/S27 3/S28 3/S33 3/S34 3/S36 3/S37
3/8" = 1'-0"

NO.	DATE	ISSUED FOR	BY
1	AUG. 21, 1986	Revised to allow Interchangeability of collector equipment parts.	R.V.

DESIGNED DAC
DRAWN WMM
CHECKED WEB
APPROVED
P.E.

POST, BUCKLEY, SCHUH & JERNIGAN INC.
CONSULTING ENGINEERS & PLANNERS
HAZEN AND SAWYER, P.C.
CONSULTING ENGINEERS
A JOINT VENTURE
MIAMI 078-001 8940

MIAMI-DADE WATER AND SEWER AUTHORITY

UPGRADING OF EXISTING CENTRAL DISTRICT WASTEWATER TREATMENT PLANT
VIRGINIA KEY, DADE COUNTY, FLORIDA

FINAL SETTLING TANKS
CROSS SECTION
EFFLUENT END

CONTRACT NUMBER(S) S-285
EPA C120429130
DATE MARCH 15, 1984

DWG S-39
SHEET 41 OF 74
REF. NO. S-7787-A

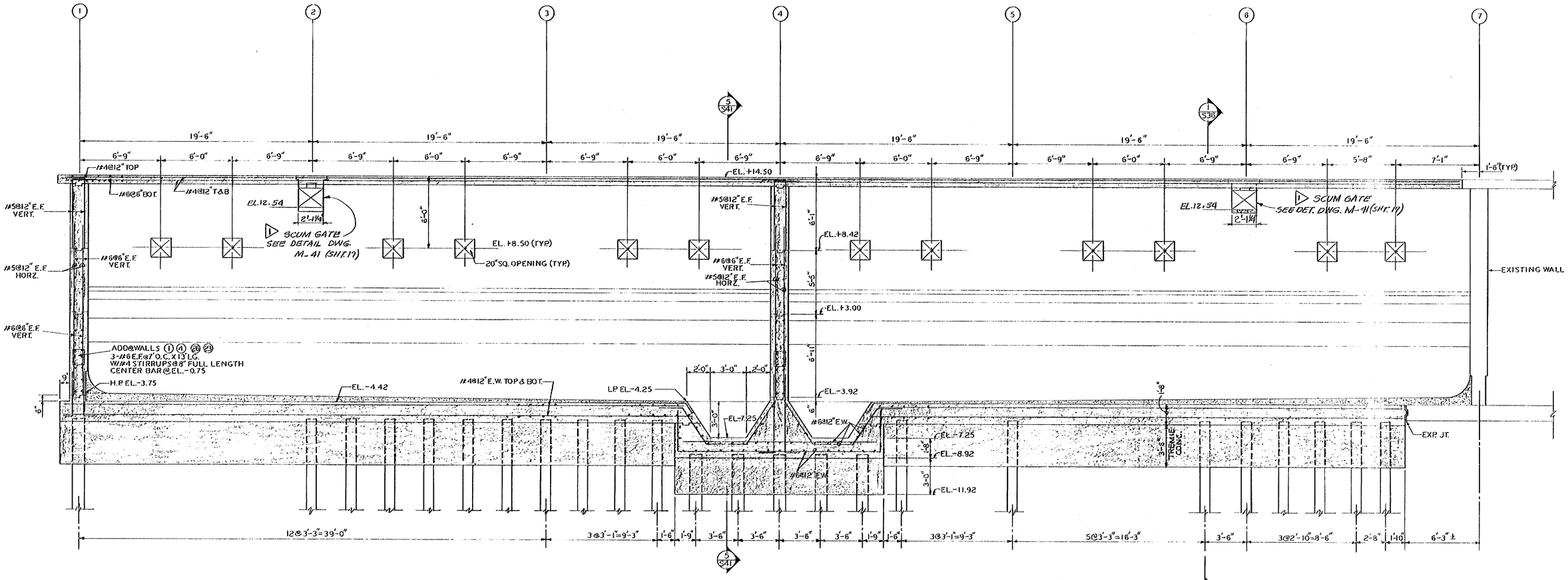

SECTION 4/326 4/329 4/330 4/341
1/4" = 1'-0"

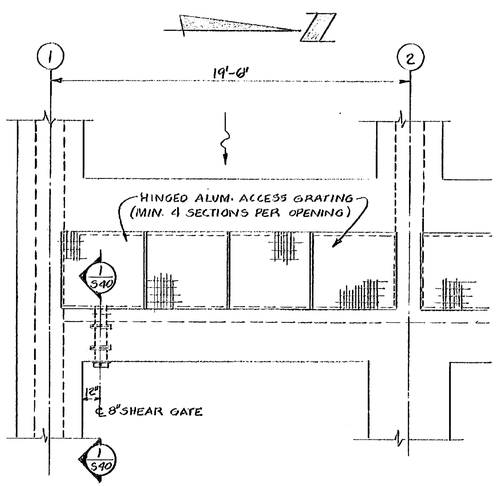

PARTIAL PLAN AT SCUM TROUGH
1/4" = 1'-0"

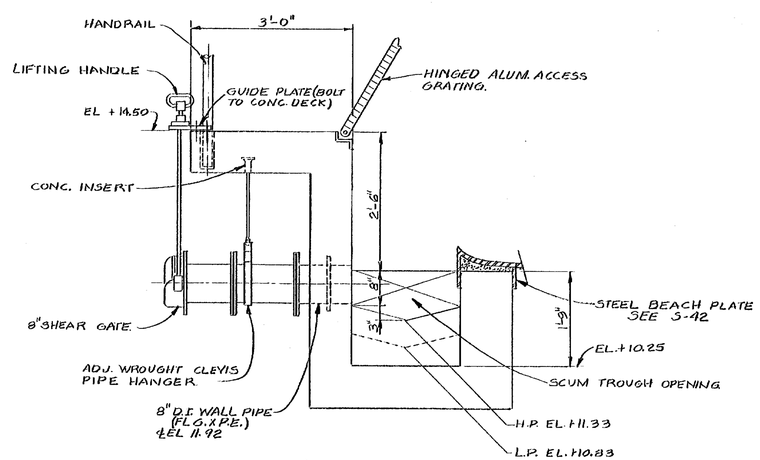

SCUM TROUGH 1/S-40
SECTION
3/4" = 1'-0"

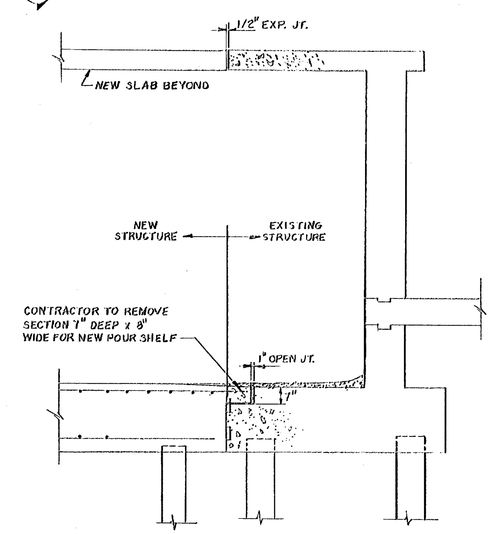

SECTION 2/S-35
3/8" = 1'-0"

NO.	DATE	ISSUED FOR	BY
1	DEC. 21, 1984	ADDENDUM NO. 2	

DESIGNED DAC
DRAWN WMM
CHECKED WEB
APPROVED
P.E.

POST, BUCKLEY, SCHUH & JERNIGAN INC.
CONSULTING ENGINEERS & PLANNERS
HAZEN AND SAWYER, P.C.
CONSULTING ENGINEERS
MIAMI
A JOINT VENTURE
078-001 8940

MIAMI-DADE WATER AND SEWER AUTHORITY

UPGRADING OF EXISTING CENTRAL DISTRICT WASTEWATER TREATMENT PLANT
VIRGINIA KEY, DADE COUNTY, FLORIDA

FINAL SETTLING TANKS
SECTIONS AND DETAILS - SHT. 1

CONTRACT NUMBER(S) S-285
EPA C120429130
DATE MARCH 15, 1984

DWG. S-40
SHEET 42 OF 74
REF. NO. S-7783-A

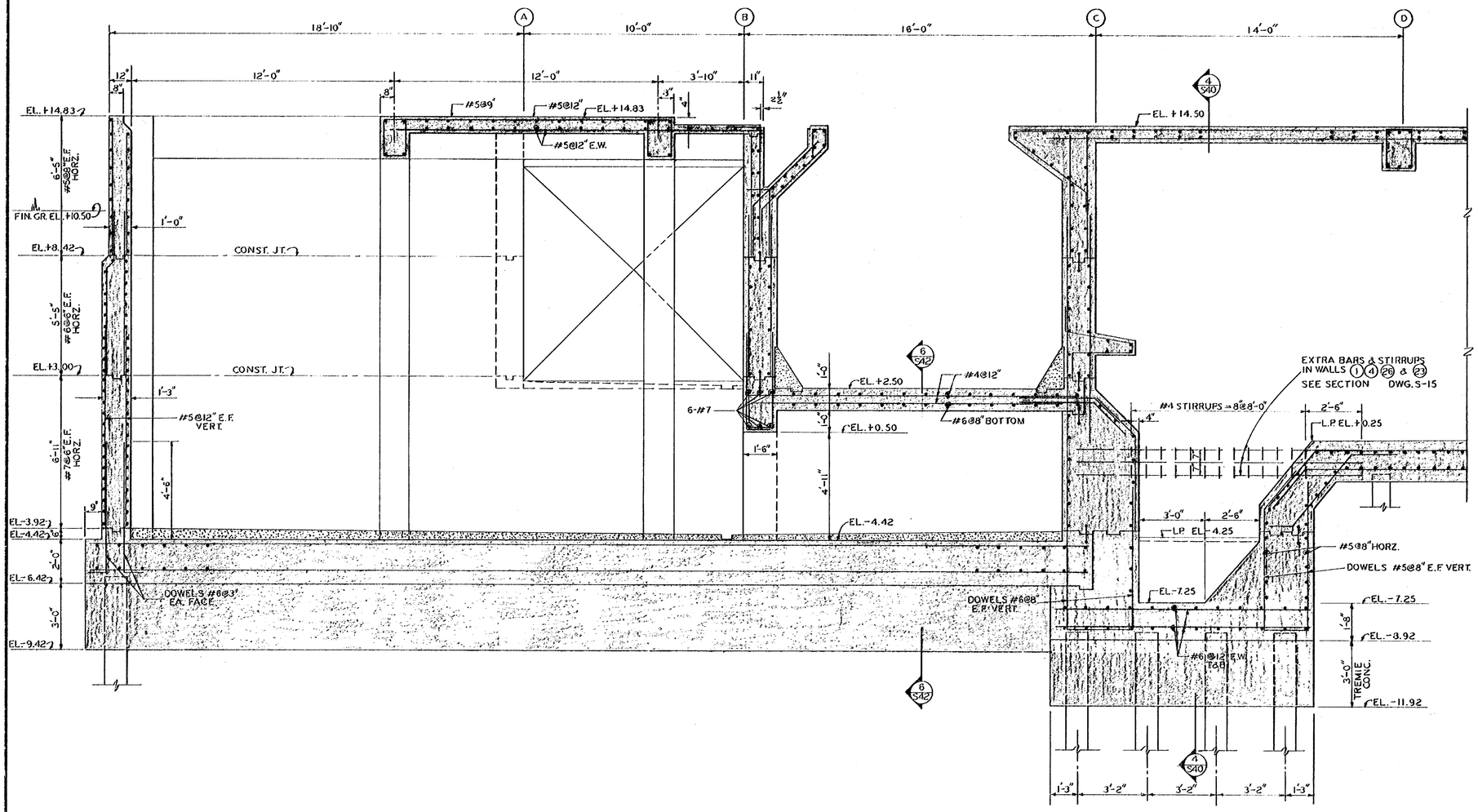

SECTION 6/S26 6/S29 5/S30 5/S40
3/8" = 1'-0"

NO.	DATE	ISSUED FOR	BY

DESIGNED DAC
DRAWN WMM
CHECKED WEB
APPROVED _____ P.E.

POST, BUCKLEY, SCHUH & JERNIGAN INC.
CONSULTING ENGINEERS & PLANNERS
HAZEN AND SAWYER, P.C.
CONSULTING ENGINEERS
MIAMI 078-001 8940

A JOINT VENTURE

MIAMI-DADE WATER AND SEWER AUTHORITY
UPGRADING OF EXISTING CENTRAL DISTRICT WASTEWATER TREATMENT PLANT
VIRGINIA KEY, DADE COUNTY, FLORIDA

FINAL SETTLING TANKS
SECTIONS AND DETAILS - SHT. 2

CONTRACT NUMBER(S) S-285
EPA C120429130
DATE MARCH 15, 1984

DWG. S-41
SHEET 43 OF 74
REF NO. S-7789-A

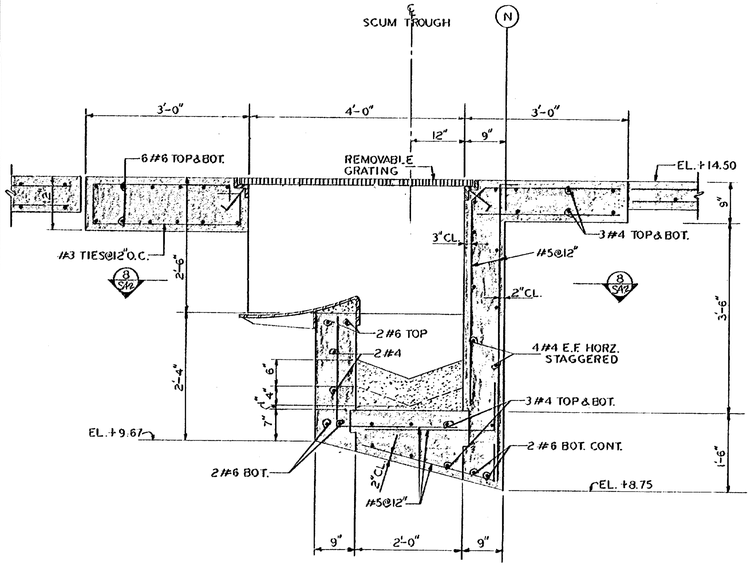

SCUM TROUGH DETAIL
3/4" = 1'-0"

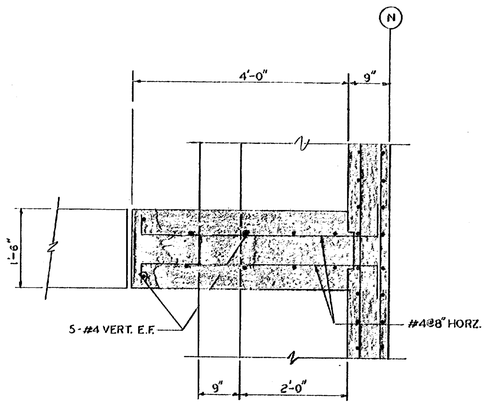

SECTION 8 3/42
3/4" = 1'-0"

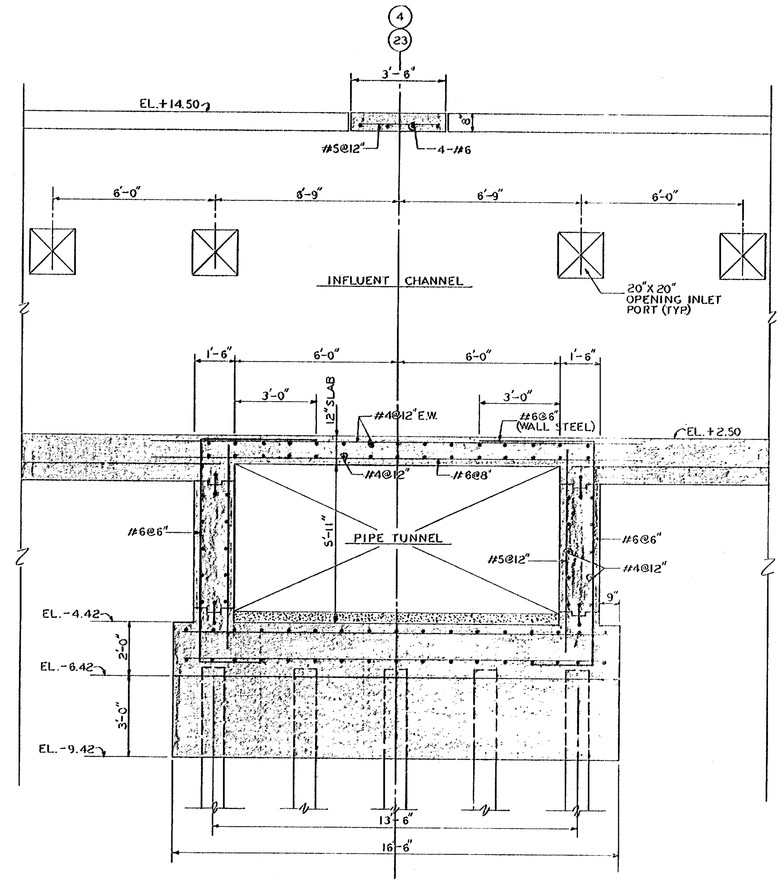

SECTION 6 326 6 329 6 330 6 342
3/8" = 1'-0"

NO.	DATE	ISSUED FOR	BY

DESIGNED DAC
DRAWN WMM
CHECKED WEB
APPROVED

P.E.

POST, BUCKLEY, SCHUH & JERNIGAN INC.
CONSULTING ENGINEERS & PLANNERS
HAZEN AND SAWYER, P.C.
CONSULTING ENGINEERS
A JOINT VENTURE
MIAMI 078-001 8940

MIAMI-DADE WATER AND SEWER AUTHORITY
UPGRADING OF EXISTING CENTRAL DISTRICT WASTEWATER TREATMENT PLANT
VIRGINIA KEY, DADE COUNTY, FLORIDA

FINAL SETTLING TANKS
SECTIONS AND DETAILS - SHT. 3

CONTRACT NUMBER(S) S-285
EPA C120429130
DATE MARCH 15, 1984

DWG. S-42
SHEET 44 OF 74
REF. NO. S-7790-A

A# 13343

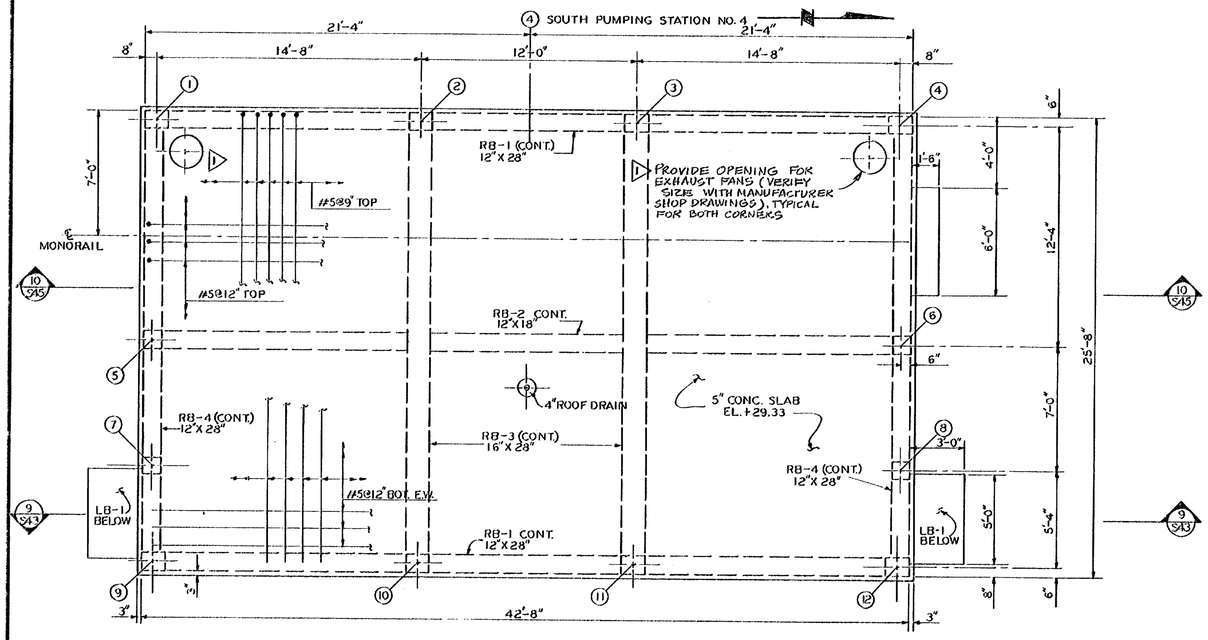

ROOF FRAMING PLAN

1/4" = 1'-0"

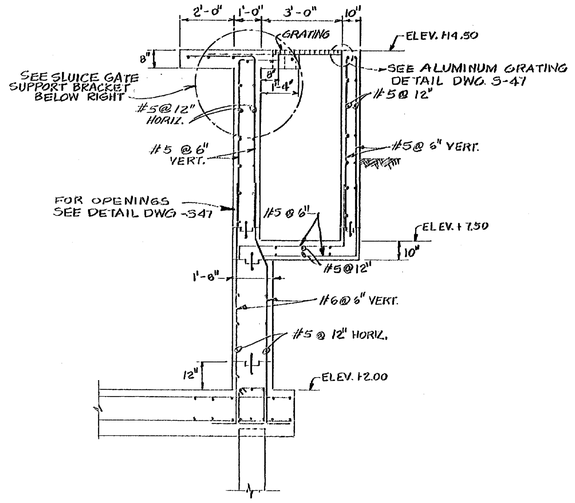

SECTION 1/S-35
3/8" = 1'-0"

FIRST FLOOR COLUMN SCHEDULE					
MARK	SIZE	* VERTICAL STEEL		COLUMN TIES	
		NO.	SIZE	SIZE	SPACING
① ② ③ ④ ⑨ ⑩ ⑪ & ⑫	12"X 16"	6	#9	#3	12"
⑤ & ⑥	12"X 12"	4	#8	#3	12"
⑦ & ⑧	12"X 12"	4	#6	#3	12"

* CUT OFF ALL VERTICAL STEEL @ EL. +28.33

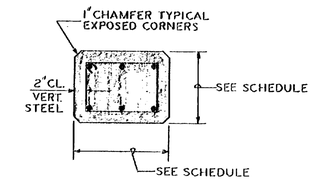

TYPICAL COLUMN SECTION

1" = 1'-0"

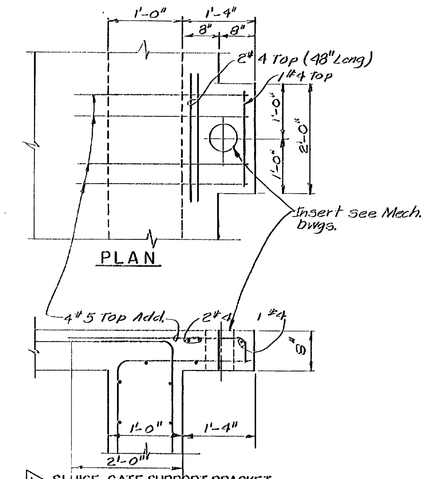

PLAN

SLUICE GATE SUPPORT BRACKET

DETAIL

3/4" = 1'-0"

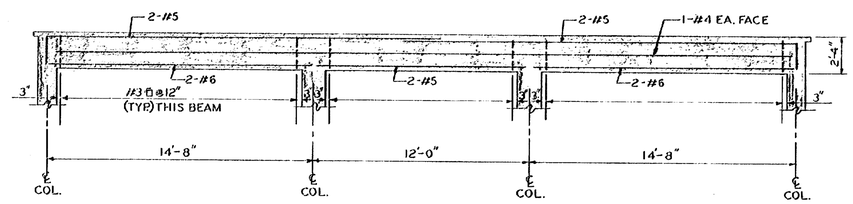

BEAM RB-1

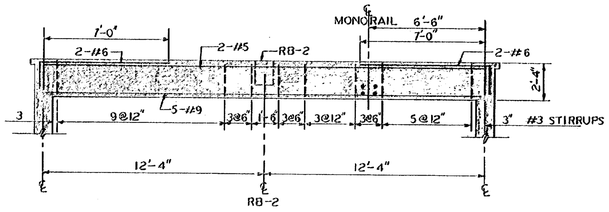

BEAM RB-3

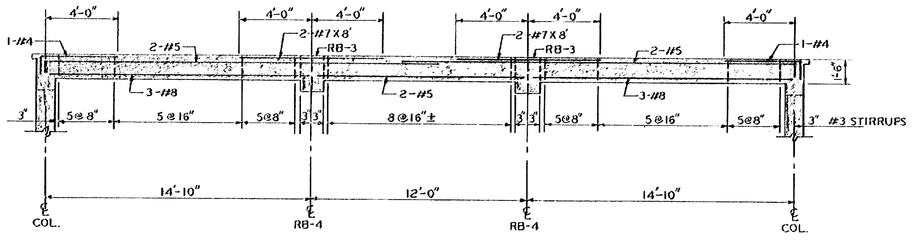

BEAM RB-2

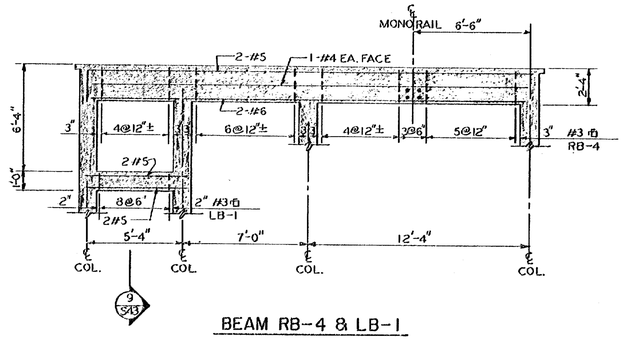

BEAM RB-4 & LB-1

BEAM REINFORCEMENT DETAILS

1/4" = 1'-0"

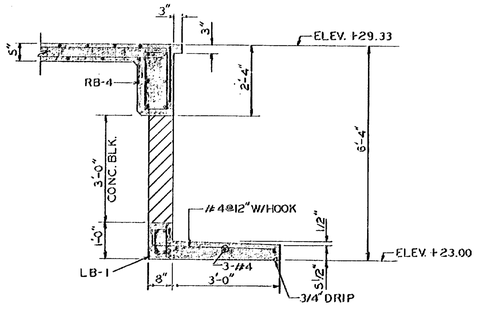

SECTION

1/2" = 1'-0"

NO.	DATE	ISSUED FOR	BY
1	DEC. 21, 1984	ADDENDUM NO. 2	

DESIGNED DAC
DRAWN WMM
CHECKED WEB
APPROVED
P.E.

POST, BUCKLEY, SCHUH & JERNIGAN INC.
CONSULTING ENGINEERS & PLANNERS
HAZEN AND SAWYER, P.C.
CONSULTING ENGINEERS
MIAMI
A JOINT VENTURE
078-001 8940

MIAMI-DADE WATER AND SEWER AUTHORITY

UPGRADING OF EXISTING CENTRAL DISTRICT WASTEWATER TREATMENT PLANT
VIRGINIA KEY, DADE COUNTY, FLORIDA

FINAL SETTLING TANKS
SLUDGE PUMP STATION NO. 4
ROOF FRAMING PLAN AND DETAILS

CONTRACT NUMBER(S) S-285
EPA C120429130
DATE MARCH 15, 1984

DWG. S-43
SHEET 45 OF 74
REF. NO. S-7791-A

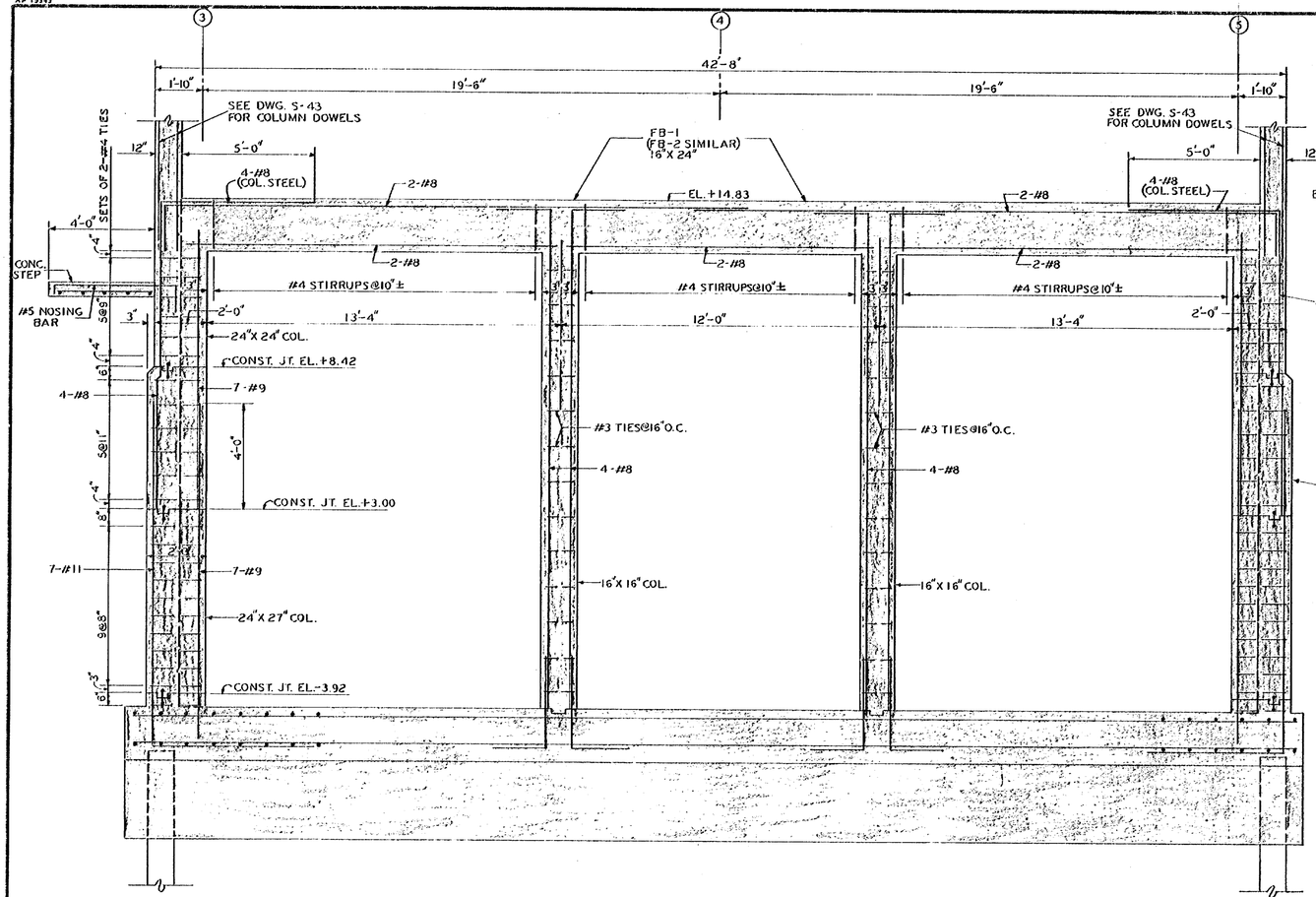

SECTION (11/S29) (11/S30)
3/8"=1'-0"

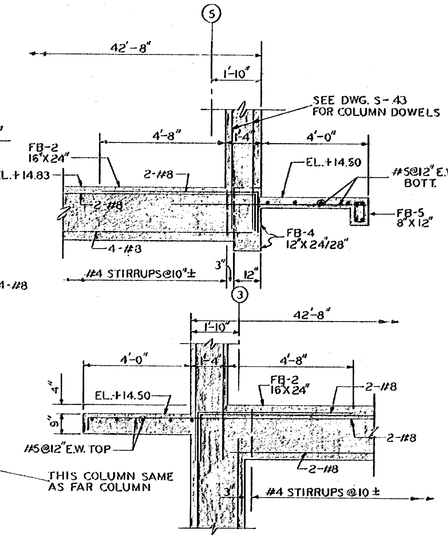

END DETAILS FOR SECTION (11a/S29) (11a/S30)
3/8"=1'-0"

BASEMENT COLUMN SCHEDULE					
MARK	SIZE	VERTICAL STEEL		COLUMN TIES	
		NO.	SIZE	SIZE	SPACING
FIRST FLOOR EL. +14.83 (B1) (B2) (B3) (B6) & (B7)	24X24	4 OUTSIDE FACE	#8	SETS OF 2-#4	SEE SECTION (11/S44)
		7 INSIDE FACE	#9		
EL. +8.42	27X24	4 OUTSIDE FACE	#8		
		7 INSIDE FACE	#9		
EL. +3.00	27X24	7 OUTSIDE FACE	#11		
BASEMENT FLOOR EL. -4.42		7 INSIDE FACE	#9		
FIRST FLOOR EL. +14.83 (B4) (B5) (B6) & (B7)	16X16	4	#8	#3	16"
BASEMENT FLOOR EL. -4.42					

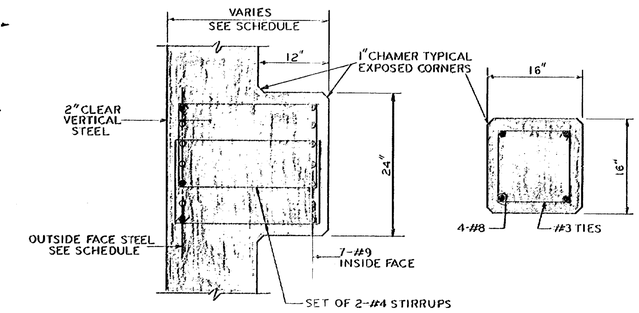

TYPICAL COLUMN SECTIONS
1"=1'-0"

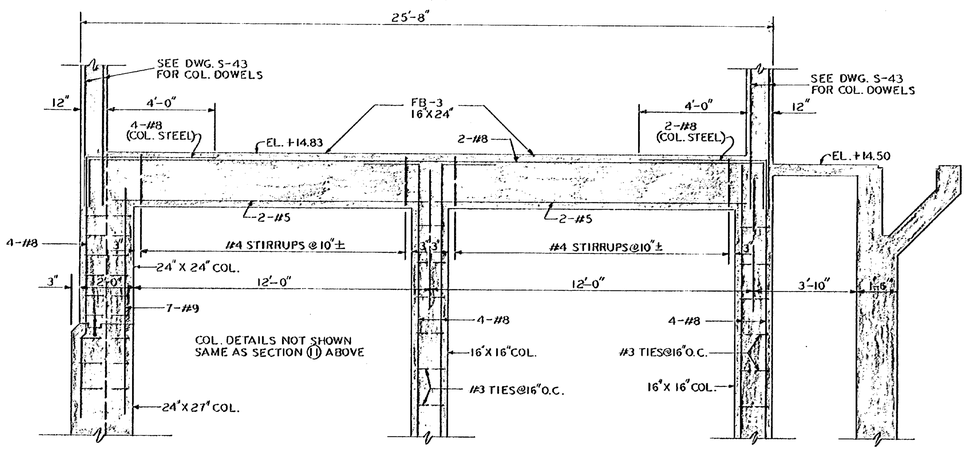

SECTION (12/S30)
3/8"=1'-0"

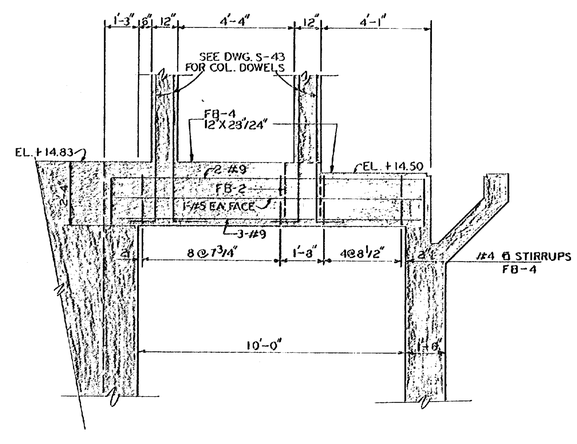

SECTION (13/S30)
3/8"=1'-0"

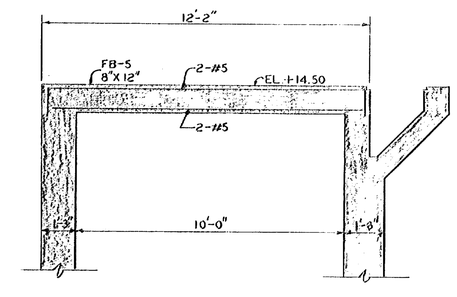

SECTION (14/S30)
3/8"=1'-0"

NO.	DATE	ISSUED FOR	BY

DESIGNED DAC
DRAWN WMM
CHECKED WEB
APPROVED

P.E.

POST, BUCKLEY, SCHUH & JERNIGAN INC.
CONSULTING ENGINEERS & PLANNERS
HAZEN AND SAWYER, P.C.
CONSULTING ENGINEERS
A JOINT VENTURE
MIAMI 079-001 8940

MIAMI-DADE WATER AND SEWER AUTHORITY

UPGRADING OF EXISTING CENTRAL DISTRICT WASTEWATER TREATMENT PLANT
VIRGINIA KEY, DADE COUNTY, FLORIDA

FINAL SETTLING TANKS
SLUDGE PUMP STATION NO. 4
FLOOR SECTIONS

CONTRACT NUMBER(S) S-285
EPA C120429130
DATE MARCH 15, 1984

DWG. S-44
SHEET 46 OF 74
REF. NO. S-7792-A

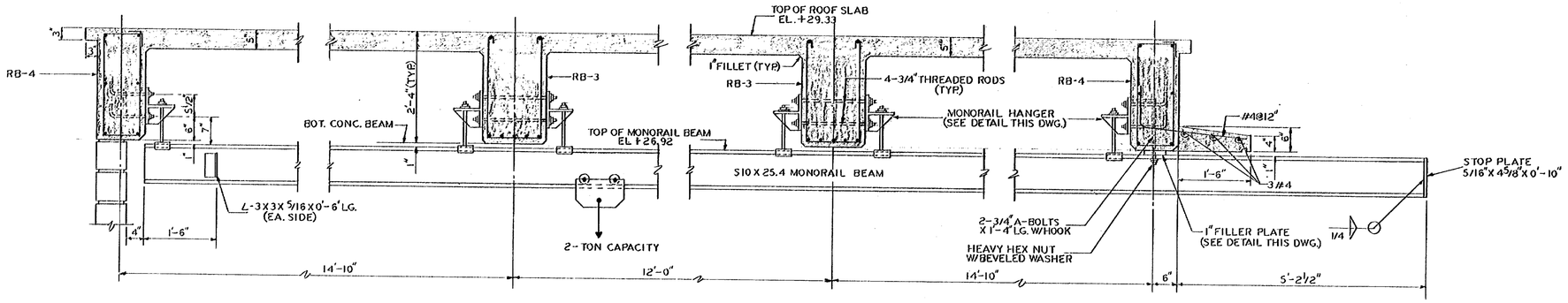

SECTION
3/4" = 1'-0"
10/S43

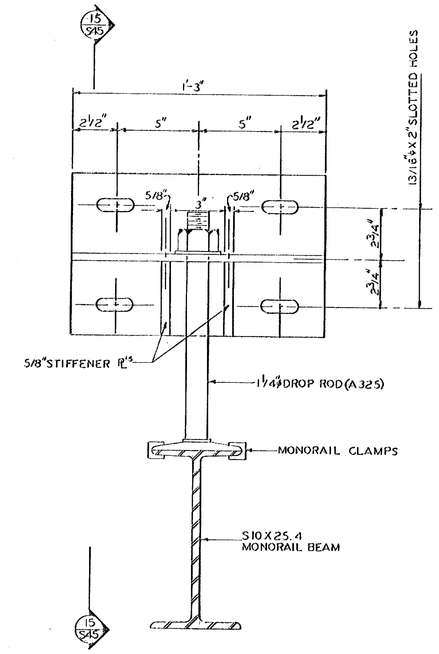

MONORAIL HANGER DETAIL
3" = 1'-0"

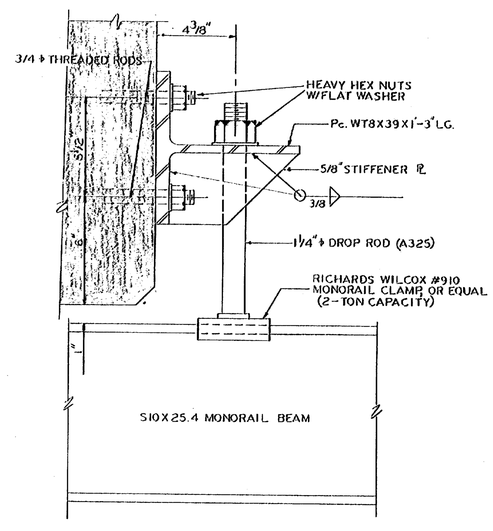

SECTION
3" = 1'-0"
15/S45

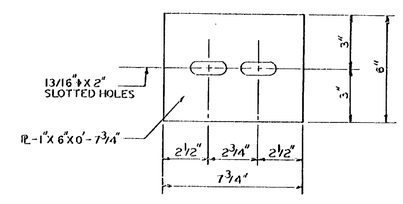

FILLER PLATE DETAIL
3" = 1'-0"

NO.	DATE	ISSUED FOR	BY

DESIGNED DAC
DRAWN WMM
CHECKED WEB
APPROVED

P.E.

POST, BUCKLEY, SCHUH & JERNIGAN INC.
CONSULTING ENGINEERS & PLANNERS
HAZEN AND SAWYER, P.C.
CONSULTING ENGINEERS
A JOINT VENTURE
MIAMI 078-001 8940

MIAMI-DADE WATER AND SEWER AUTHORITY

UPGRADING OF EXISTING CENTRAL DISTRICT WASTEWATER TREATMENT PLANT
VIRGINIA KEY, DADE COUNTY, FLORIDA

FINAL SETTLING TANKS
STANDARD AND TYPICAL DETAILS

CONTRACT NUMBER(S) S-285
EPA C120429130
DATE MARCH 15, 1984

DWG. S-45
SHEET 47 OF 74
REF. NO. S-7793-A

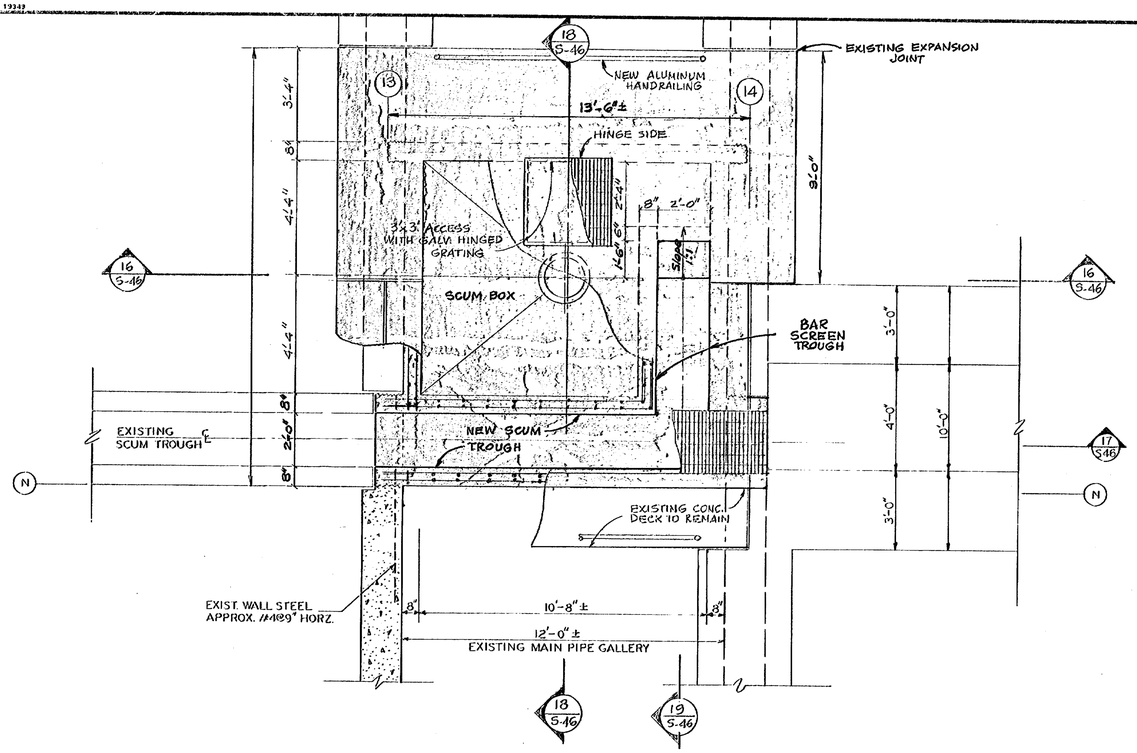

SCUM BOX DETAIL
3/8"=1'-0"

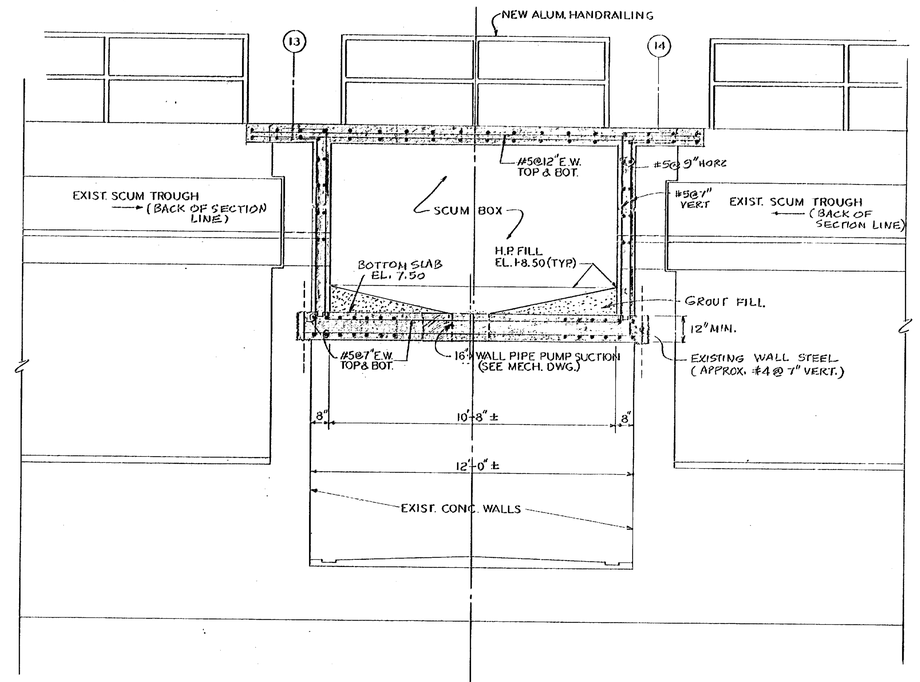

SECTION
3/8"=1'-0"

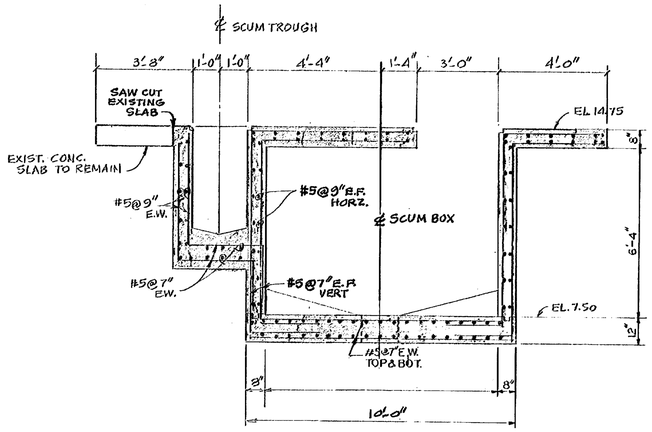

SECTION
3/8"=1'-0"

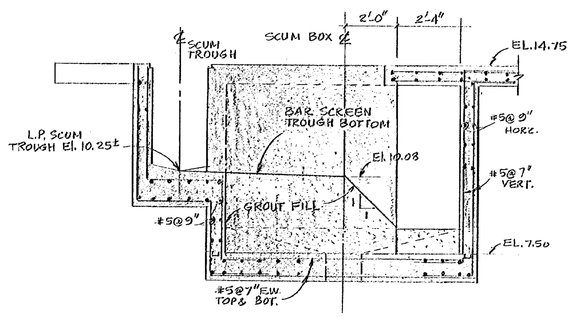

SECTION
3/8"=1'-0"

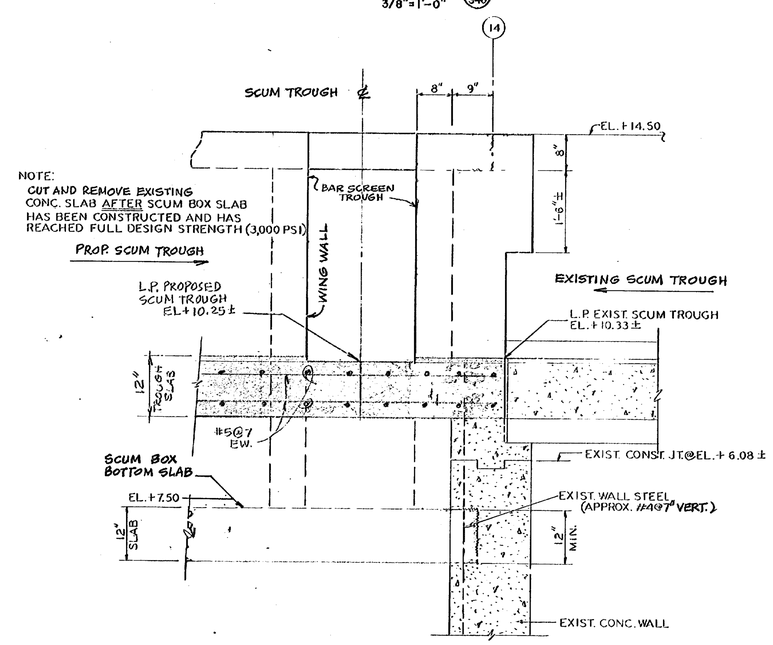

SECTION
3/4"=1'-0"

NO.	DATE	ISSUED FOR	BY

DESIGNED DAC
DRAWN WMM
CHECKED WEG
APPROVED

P.E.

POST, BUCKLEY, SCHUH & JERNIGAN INC.
CONSULTING ENGINEERS & PLANNERS
HAZEN AND SAWYER, P.C.
CONSULTING ENGINEERS
A JOINT VENTURE
MIAMI 078-001 8940

MIAMI-DADE WATER AND SEWER AUTHORITY

UPGRADING OF EXISTING CENTRAL DISTRICT WASTEWATER TREATMENT PLANT
VIRGINIA KEY, DADE COUNTY, FLORIDA

FINAL SETTLING TANKS
MISCELLANEOUS DETAILS

CONTRACT NUMBER(S) S-285
EPA C120429130
DATE MARCH 15, 1984

DWG. S-46
SHEET 48 OF 74
REF. NO. S-7794-A

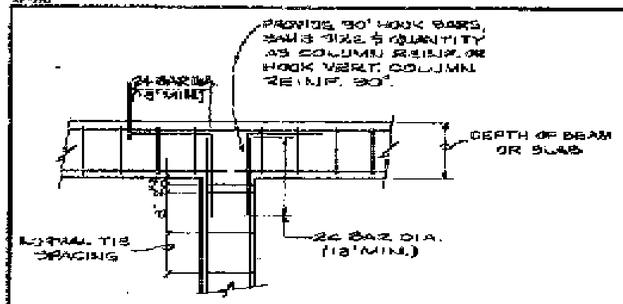

COLUMN TO ROOF BEAM DETAIL

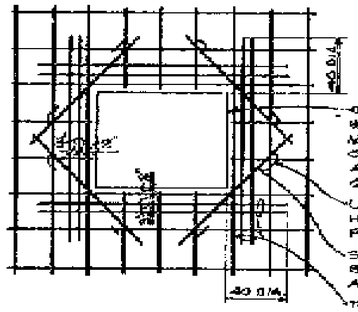

RECTANGULAR OPENING

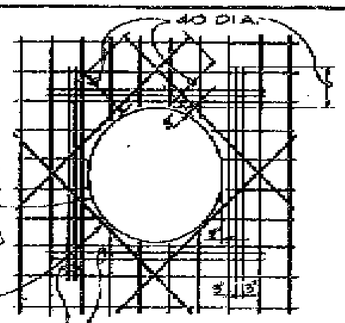

CIRCULAR OPENING

TYPICAL ADDITIONAL REINFORCEMENT AT OPENINGS FOR SLABS AND WALLS

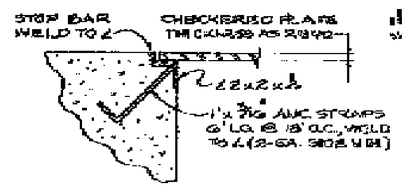

ALUMINUM CHECKERED PLATE DETAIL

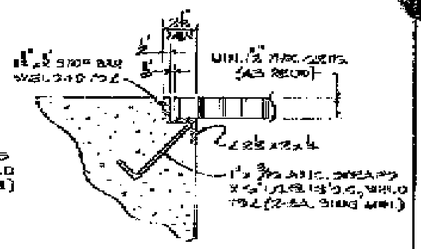

ALUMINUM GRATING DETAIL

NOTES:

1. FOR GRATING & CHECKERED PLATE MATERIAL, SEE PLANS & SPECIFICATIONS.
2. ALL GRATING OR CHECKERED PLATE ARE ALUMINUM. ALL ANGLES, ANCHORS, STUD BARS SHALL BE ALUMINUM. COAT ALL ALUMINUM SURFACES IN CONTACT WITH CONCRETE WITH BITUMEN.

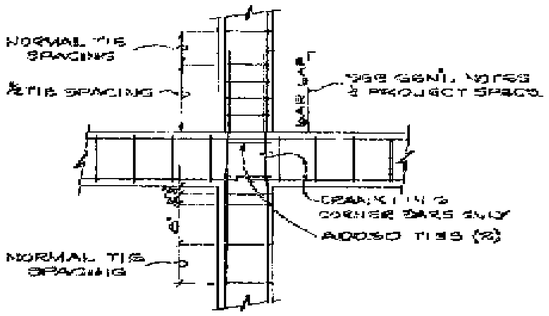

COLUMN THRU INTERMEDIATE BEAM DETAIL

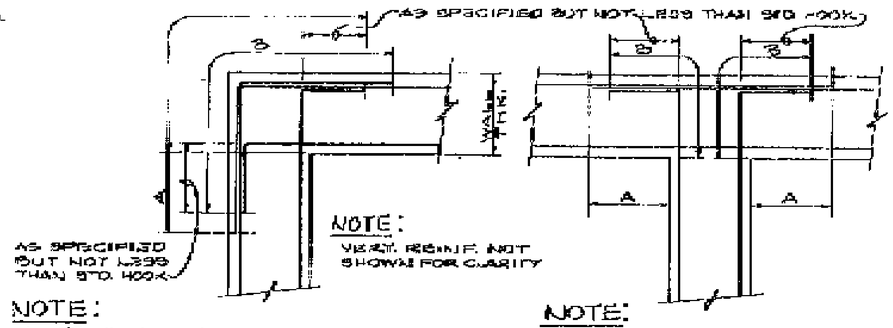

NOTE:

A = 1/5 CLEAR SPAN DISTANCE MEASURED HORIZONTALLY OR VERTICALLY, WHICHEVER IS SMALLER, IF NOT SPECIFIED; BUT IN NO CASE LESS THAN REQUIRED LENGTH OF LAPPED SPLICE FOR TOP BARS.

NOTE:

B = SUFFICIENT LENGTH TO PERMIT BARS TO EXTEND THRU WALL TO OPPOSITE FACE & TERMINATE WITH A STANDARD HOOK, BUT NOT LESS THAN LENGTH REQUIRED FOR EMBEDMENT OF TOP BARS.

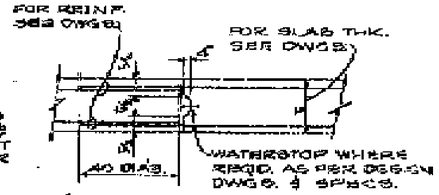

CONSTRUCTION JOINT IN SLABS

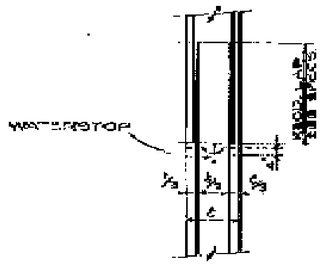

CONSTRUCTION JOINT IN WALLS

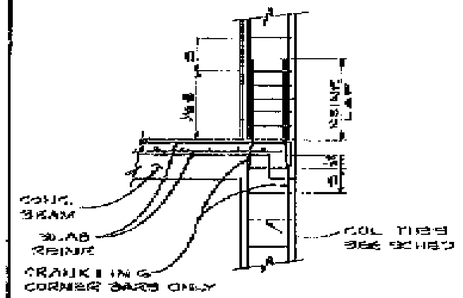

COLUMN THRU INTERMEDIATE END BEAM DETAIL

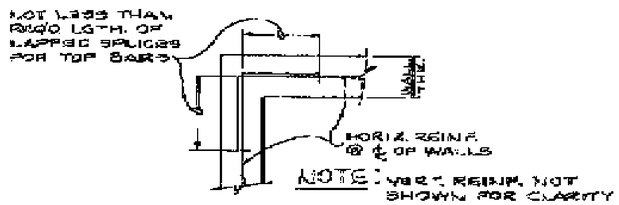

TYPICAL CORNER REINFORCEMENT DETAILS

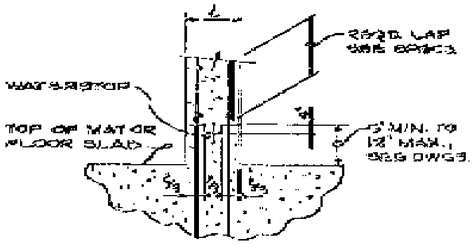

CONSTRUCTION JOINT AT BASE OF WALLS

TYPICAL CONSTRUCTION JOINTS

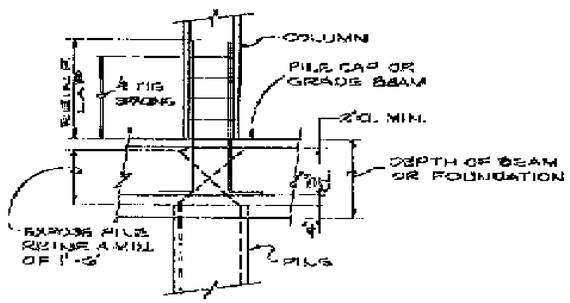

TYPICAL PILE FOUNDATION SECTION

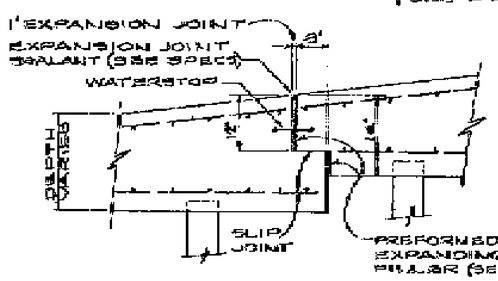

FOUNDATION SLAB JOINT

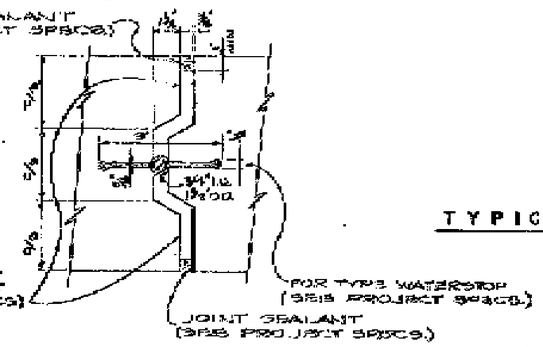

WALL JOINT

EXPANSION JOINT DETAILS

DESIGNED	R.M.W.	POST, BUCKLEY, SCHUH & JERNIGAN INC. CONSULTING ENGINEERS & PLANNERS	MIAMI-DADE WATER AND SEWER AUTHORITY
DRAWN	R.K.R.	HAZEN AND SAWYER, P.C. CONSULTING ENGINEERS	UPGRADING OF EXISTING CENTRAL DISTRICT WASTEWATER TREATMENT PLANT VIRGINIA KEY, DADE COUNTY, FLORIDA
CHECKED	R.W.W.		
APPROVED	J.M.R.		

STRUCTURAL

STANDARD AND TYPICAL DETAILS SHEET 1

CONTRACT S-283 UNIT NO. 01

DATE 01/04/2130

DATE MAR. 15, 1984

FILE S-67

SHEET 49 OF 74

REF. DWG. S-279 S-A

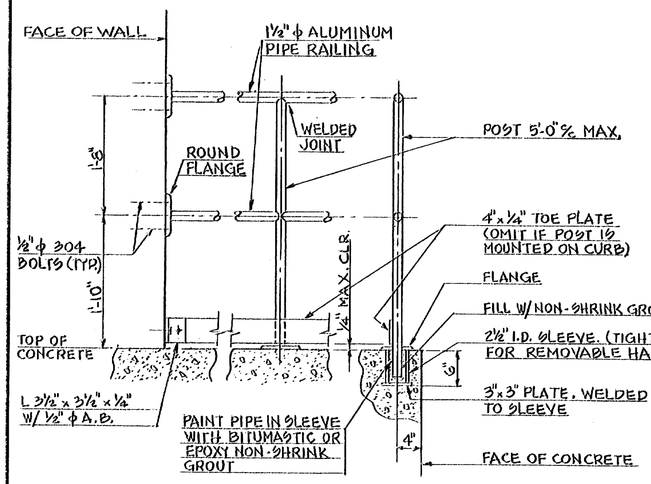

ALUMINUM HANDRAIL DETAILS
1" = 1'-0"

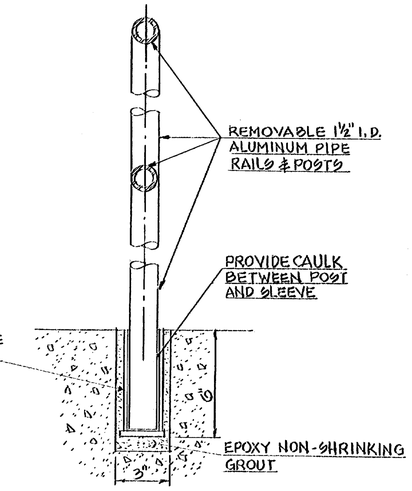

REMOVABLE HANDRAIL DETAIL
3" = 1'-0"

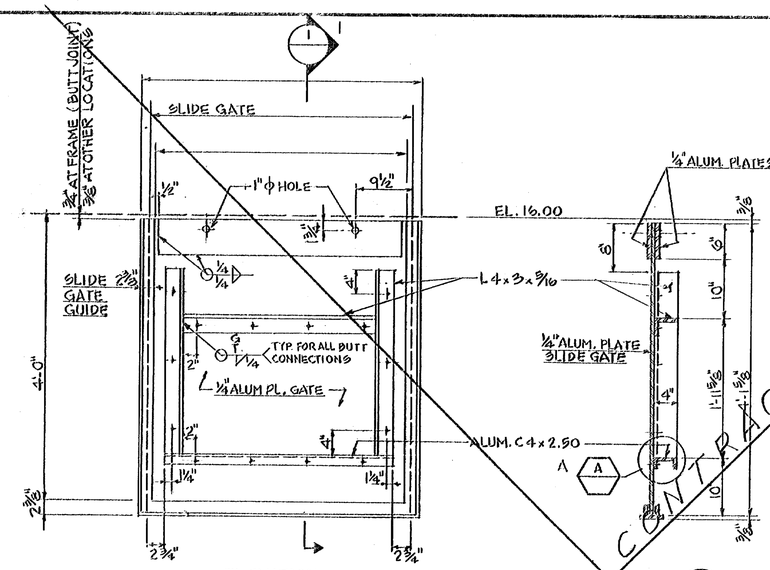

ELEVATION
1" = 1'-0"

SECTION 1
1" = 1'-0"

NOTE:
SLIDE GATES SHALL BE FABRICATED USING ALUMINUM ALLOY 6061-T6 FOR ALL SHAPES AND PLATES. FASTEN FRAME TO ¼" PL. WITH ½" DIA. BOLTS, FLAT WASHERS AND NUTS MADE FROM TYPE 410 STAINLESS STEEL ALLOY. SPACING OF BOLTS AS SHOWN.

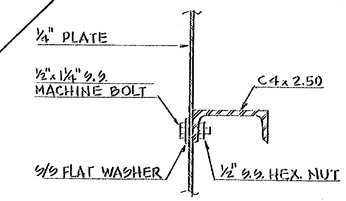

DETAIL A
3" = 1'-0"

NOT IN CONTRACT

NOTE:
ALL PIPE RAILING AND RELATED ITEMS SHALL BE FABRICATED TO RESIST A 200 LBS. LOAD APPLIED IN ANY DIRECTION.

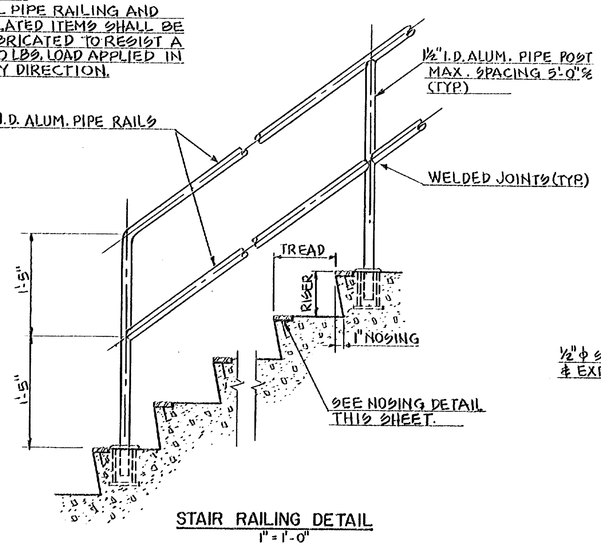

STAIR RAILING DETAIL
1" = 1'-0"

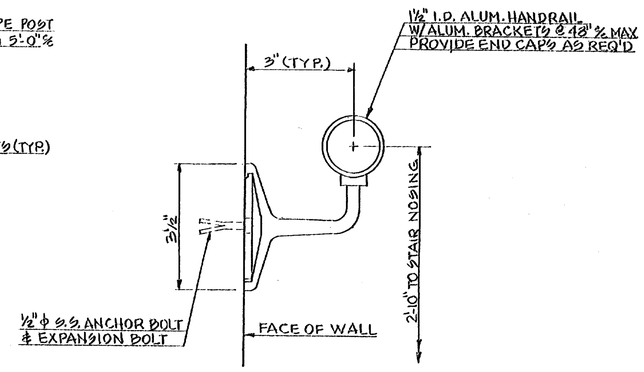

WALL MOUNTED HANDRAIL DETAIL
HALF SCALE

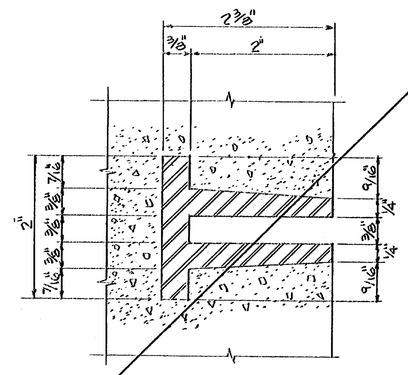

ALUMINUM SLIDE GATE GUIDE
FULL SIZE

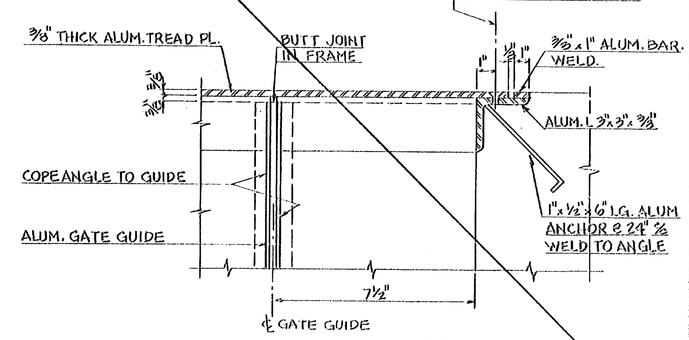

SECTION
3" = 1'-0"

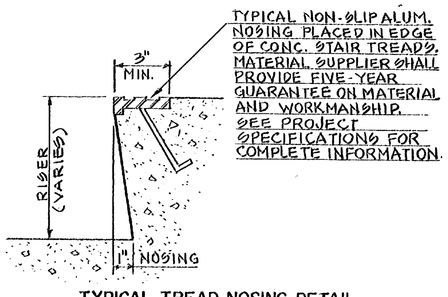

TYPICAL TREAD NOSING DETAIL
NO SCALE

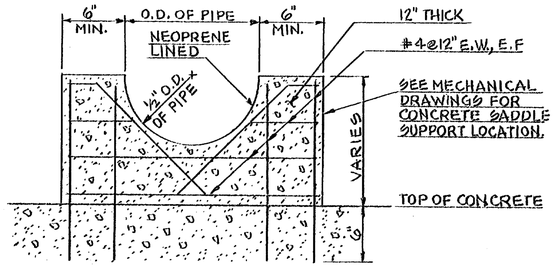

TYPICAL CONCRETE PIPE SADDLE
NO SCALE

NO.	DATE	ISSUED FOR	BY

DESIGNED A.M.W.
DRAWN S.B.
CHECKED A.M.W.
APPROVED J.N.R.

P.E.

POST, BUCKLEY, SCHUH & JERNIGAN INC.
CONSULTING ENGINEERS & PLANNERS
HAZEN AND SAWYER, P.C.
CONSULTING ENGINEERS
MIAMI
073-001 8940

MIAMI-DADE WATER AND SEWER AUTHORITY

UPGRADING OF EXISTING CENTRAL DISTRICT WASTEWATER TREATMENT PLANT
VIRGINIA KEY, DADE COUNTY, FLORIDA

STRUCTURAL
STANDARD AND TYPICAL DETAILS
SHEET 2

CONTRACT NUMBER(S) S-285
EPA C120429130
DATE MAR. 15, 1984

DWG S-48
SHEET 50 OF 74
REF NO. S-7796-A

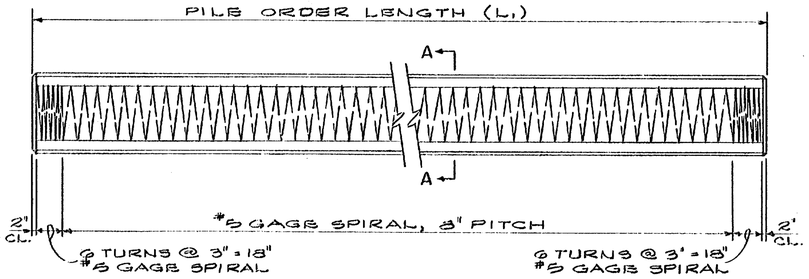

DETAILS OF 10" AND 12" SQUARE PRESTRESSED P.C. PILES

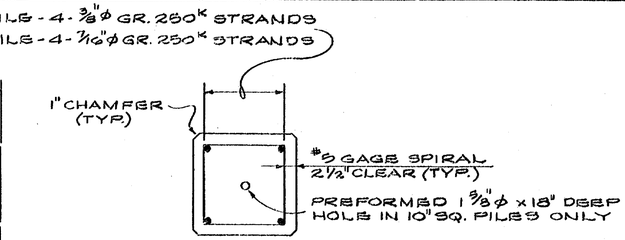

SECTION "A-A"

NOTE:

PILE PICK-UP POINTS TO BE PLAINLY MARKED ON PILES.

MAXIMUM LENGTHS

10" x 10" PILE - L_1 = 42'-0"

12" x 12" PILE - L_1 = 45'-0"

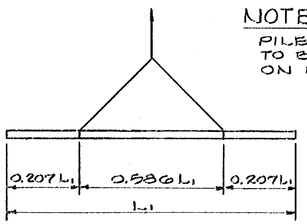

2-POINT PICK-UP

PILE PICK-UP POINT LOCATION

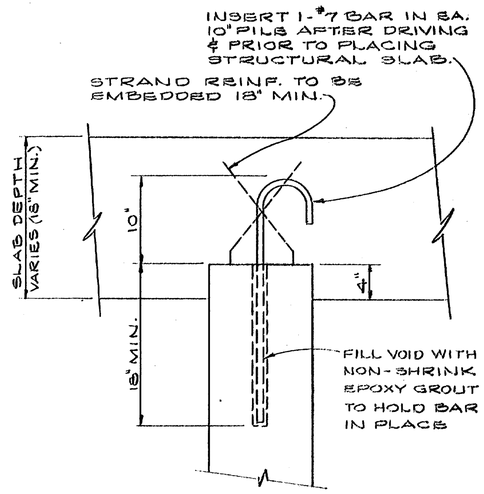

ANCHOR DETAIL

SCALE: 1-1/2" = 1'-0"

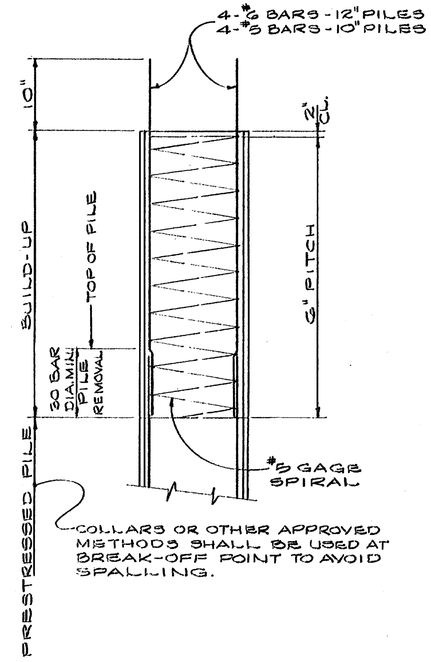

TYPICAL BUILD-UP

PRESTRESSED PILE NOTES:

1. CONCRETE: CONCRETE IN THE PRECAST PRESTRESSED PILES SHALL HAVE A MINIMUM COMPRESSIVE STRENGTH (f'c) OF NOT LESS THAN 5,000 PSI AT TIME OF DRIVING AND A MINIMUM COMPRESSIVE STRENGTH (f'ci) OF NOT LESS THAN 3,000 PSI BEFORE TRANSFER OF PRESTRESS FORCE. ALL PRESTRESSED PILING SHALL BE HELD AT THE PLANT A MINIMUM OF 10 DAYS AFTER THE CONCRETE HAS ATTAINED A COMPRESSIVE STRENGTH OF 5,000 PSI.
2. PRESTRESSING REINFORCEMENT: PRESTRESSING REINFORCEMENT SHALL BE SEVEN-WIRE, UNCOATED, STRESS-RELIEVED STEEL STANDS, GRADE 250, AND SHALL CONFORM TO THE REQUIREMENTS OF A.S.T.M. DESIGNATION A-416. AN INITIAL TENSILE FORCE OF 14,000 LBS. AND 18,900 LBS. SHALL BE APPLIED TO EACH 3/8" DIA. AND EACH 7/16" DIA. STRAND, RESPECTIVELY.
3. SPIRAL REINFORCING STEEL: NO. 5 GAGE (0.2070 INCHES MINIMUM DIAMETER) SPIRAL REINFORCING SHALL BE COLD-DRAWN STEEL WIRE AND SHALL CONFORM TO A.S.T.M. DESIGNATION A-82.
4. PILE CUT OFF: CUT OFF ELEVATIONS SHALL OCCUR AS INDICATED ON DRAWINGS. EXTEND PILE REINFORCING 18" MINIMUM INTO FOUNDATION SLAB.
5. CHAMFERS AND CORNERS: PILES TO HAVE 1" CHAMFERS.
6. PICK-UP AND HANDLING: MAXIMUM LENGTHS FOR PICK-UP HAVE BEEN DETERMINED USING THE FOLLOWING STRESS ASSUMPTIONS:
   LOADING: 1-1/2 TIMES FULL DEAD LOAD.
   ALLOWABLE TENSILE STRESS EQUALS: $6\sqrt{f'c}$.
   THIS STRESS AND LOADING CRITERIA ARE BASED ON CAREFUL HANDLING OF THE PILE. ROTATION OF PILE IN THE SLING IS TO BE PREVENTED UNTIL PILE IS IN VERTICAL POSITION. PICK-UP POINTS FOR ALL PILES TO BE CLEARLY MARKED ON PILE. PILES MAY BE MADE AT A CENTRAL PLANT AND TRANSPORTED TO THE SITE IN TRUCKS. PICK-UP POINTS SHOWN MAY BE MODIFIED FOR TRANSPORTATION PURPOSES PROVIDED THE TENSILE STRESS BASED ON ABOVE LOADING CRITERIA DOES NOT EXCEED $6\sqrt{f'c}$. THE MODIFIED PICK-UP POINTS SHALL BE SENT TO THE DESIGN ENGINEER FOR REVIEW.
7. FORMS: THE SIDE FORMS MAY BE A MAXIMUM DRAFT OF 1/4" PER FT. HOWEVER THE RESULTING AREA HAS TO BE EQUAL OR EXCEED THE PILE AREA SHOWN.
8. PILE CAPACITY: 12" x 12" PILE - 25 TONS; 10" x 10" PILE - 17 TONS.
9. MINIMUM PILE LENGTH: 12 FT. FROM TIP TO CUT OFF.
10. PILE ANCHORAGE: THE PREFORMED HOLE REQUIRED IN THE ANCHOR PILES, AS SHOWN IN ANCHOR DETAIL, SHALL BE MADE BY CASTING A WOODEN OR STYROFOAM DOWEL TO THE PILE END. THE DOWEL SHALL REMAIN IN PLACE DURING DRIVING OF PILE AND SHALL NOT BE REMOVED, UNTIL JUST PRIOR TO PLACING ANCHOR BAR. CONTRACTOR SHALL MAKE PROVISIONS TO INSURE THAT NO WATER, DEBRIS OR OTHER FOREIGN MATERIAL WILL ACCUMULATE IN HOLE, DURING THE GROUTING OF ANCHOR BAR IN PLACE.
11. EPOXY GROUT: THE EPOXY GROUT USED FOR PLACING PILE ANCHOR BARS SHALL BE "COLMA-DUR" AS MANUFACTURED BY "SIKA CHEMICALS CORPORATION" OR APPROVED EQUAL.

NO.	DATE	ISSUED FOR	BY

DESIGNED A.M.W.
DRAWN N.K.N.
CHECKED A.M.W.
APPROVED J.N.R.

P.E.

POST, BUCKLEY, SCHUH & JERNIGAN INC.
CONSULTING ENGINEERS & PLANNERS
HAZEN AND SAWYER, P.C.
CONSULTING ENGINEERS
A JOINT VENTURE
MIAMI 079-001 8940

MIAMI-DADE WATER AND SEWER AUTHORITY
UPGRADING OF EXISTING CENTRAL DISTRICT WASTEWATER TREATMENT PLANT
VIRGINIA KEY, DADE COUNTY, FLORIDA

STRUCTURAL
PILING AND MISCELLANEOUS DETAILS

CONTRACT NUMBER(S) S-285
EPA C120429130
DATE MAR. 15, 1984

DWG. S-49
SHEET 51 OF 74
REF. NO. S-7797-A

MIAMI-DADE WATER AND SEWER DEPARTMENT

CDWWTP PLANT 1 CLARIFIER BASIN No. 3 STRUCTURAL REHABILITATION

CONSENT DECREE PROJECT 2.07(3) PCTS NO. 13280

AUGUST 2018

PROJECT NUMBER 11152351

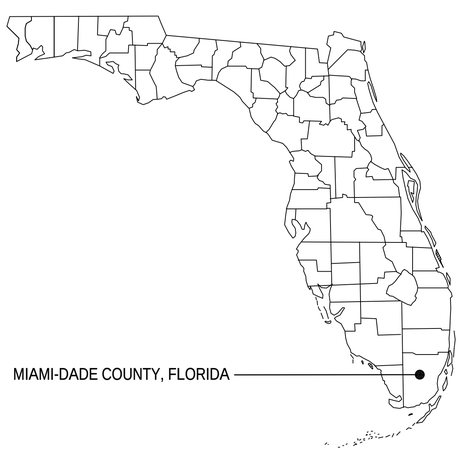

AREA MAP

NOT TO SCALE

0 1500 3000 4500 6000'

SCALE 1"=3000' AT ORIGINAL SIZE

LIST OF DRAWINGS

		GENERAL
1	G 001	COVER SHEET
		CIVIL
2	C 001	GENERAL LEGEND, LIST OF ABBREVIATIONS, DRAWING NOTES & SITE PLAN
		STRUCTURAL
3	S 001	CLARIFIER FACILITY - OVERALL LOWER & UPPER PLANS
4	S 002	CLARIFIER BASIN No. 3 - LOWER PLAN
5	S 003	CLARIFIER BASIN No. 3 - UPPER PLAN
6	S 004	CLARIFIER BASIN No. 3 - SECTION A
7	S 005	CLARIFIER BASIN No. 3 - SECTION B
8	S 006	CLARIFIER BASIN No. 3 - SECTION C
9	S 007	CLARIFIER BASIN No. 3 - SECTIONS D & E
10	S 008	CONCRETE REPAIR DETAILS

SITE INFORMATION

1. ADDRESS: 3989 RICKENBACKER CAUSEWAY, VIRGINIA KEY, FL 33149
2. OWNER: MIAMI-DADE WATER AND SEWER DEPARTMENT

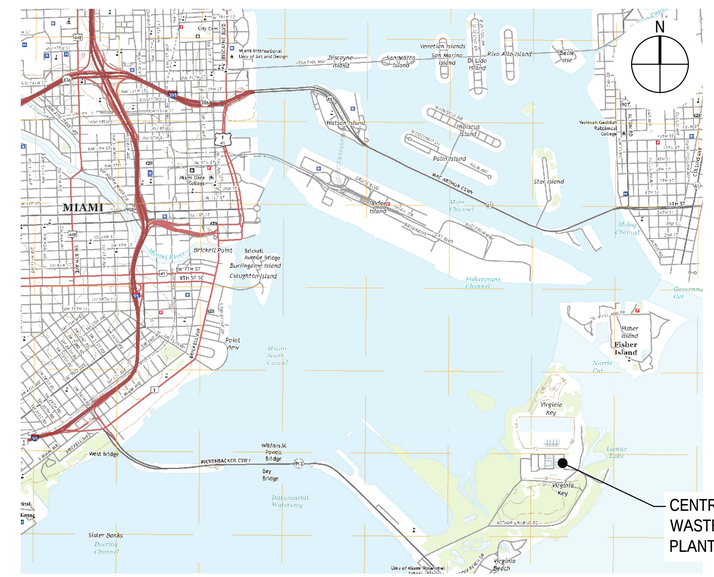

VICINITY TOPOGRAPHY MAP

SCALE: 1" = 3000'

VICINITY TOPOGRAPHY MAP VIA USGS QUADRANGLE MAPS, KEY BISCAYNE AND MIAMI QUADRANGLES, FLORIDA-MIAMI-DADE COUNTY, DATED 2018.

No.	Issue	Drawn	Approved	Date
0	FOR BID	JAR	AB	AUG 2018

MIAMI-DADE COUNTY

Bar is one inch on original size sheet

0 1"

Reuse of Documents

This document and the ideas and designs incorporated herein, as an instrument of professional service, is the property of GHD and shall not be reused in whole or in part for any other project without GHD's written authorization.

© 2018 GHD

SEAN H. ANDERSON LICENSE No. 84999 STATE OF FLORIDA PROFESSIONAL ENGINEER

800 Governor's Square Blvd, Suite 410
Miami Lakes FL 33016 USA
T 1 786 334 6392 W www.ghd.com

Drawn	J. RIDDLE	Designer	S. ANDERSON
Drafting Check	J. RIDDLE	Design Check	J. ROSMAN
Project Director	A. BURBANO	Date	AUGUST 2018
This document shall not be used for construction unless signed and sealed for construction.		Scale	AS SHOWN

Client MIAMI-DADE WATER AND SEWER DEPARTMENT

Project **CDWWTP PLANT 1 CLARIFIER BASIN No. 3 STRUCTURAL REHABILITATION**

Title COVER SHEET

Project No. GHD #11152351 - CONSENT DECREE PROJECT 2.07(3) PCTS NO. 13280

Original Size ANSI D | Sheet No. G001 | Sheet 1 of 10

Plot Date: 20 August 2018 - 4:28 PM Plotted By: Sean Anderson Filename: N:\US\Tampa\Projects\Legacy\Projects\8-chars\11------\11115----\111523--\11152351\Design\CAD\Drawings\Tank 3\General\11152351-T3-G001.dwg

GENERAL LEGEND

NEW GRAPHICS; EQUIPMENT, STRUCTURES, ETC., ARE SHOWN AS BOLD LINEWORK AND IN THIS TEXT FORMAT.

EXISTING GRAPHICS; EQUIPMENT, CONDITIONS STRUCTURES, ETC. ARE SHOWN AS LIGHT LINEWORK AND IN THIS TEXT FORMAT.

NORTH ARROW

N

TYPICAL SECTION MARKS (FOR PLANS)

SECTION LETTER — A
DRAWING NUMBER (REPRESENTS DRAWING WHERE SECTION IS DRAWN) — X-301

A
X-301

TYPICAL DETAIL MARKS

DETAIL NUMBER — 1
DRAWING NUMBER (REPRESENTS DRAWING WHERE DETAIL IS DRAWN) — G00X

DETAIL
SCALE:

TYPICAL SECTION SUB-TITLE (FOR SECTIONS)

SECTION LETTER — A
DRAWING NUMBER (REPRESENTS DRAWING WHERE SECTION MARKS ARE SHOWN) — G00X

SECTION
SCALE:

TYPICAL DETAILING

DETAIL NUMBER — 1
DRAWING NUMBER (REPRESENTS DRAWING WHERE DETAIL IS DRAWN) — X-501

DETAIL NAME

DRAWING NOTES (APPLIES TO ALL DRAWINGS)

1. ALL FACILITIES ARE EXISTING REGARDLESS OF LINEWORK.
2. CONTRACTOR TO REPAIR AND RESTORE ANY ADJACENT ROADWAYS, DRIVEWAYS, CURB, SIDEWALKS, UTILITIES, STORM DRAINS, CULVERTS, SWALES, CLEANOUTS, STRUCTURES, EQUIPMENT, AND/OR SUBGRADE THAT IS EXPOSED, DISTURBED, OR OTHERWISE DAMAGED BY THE CONTRACTOR'S ACTIVITIES.
3. CONTRACTOR SHALL MINIMIZE DISTURBANCE TO LIMIT REMOVAL OF TREES AND OTHER VEGETATION. CONTRACTOR IS RESPONSIBLE FOR ALL COSTS ASSOCIATED WITH CUTTING DOWN, REMOVAL, AND DISPOSAL OF ANY TREES AND VEGETATION NOT IDENTIFIED PRIOR TO MODIFICATION, ALONG WITH THE COST ASSOCIATED WITH REPLACING ALL VEGETATION WITH SIMILAR SPECIES.
4. EXISTING PAVEMENT SHALL BE PROTECTED FROM DAMAGE WHERE POSSIBLE. ANY DEMOLISHED OR DAMAGED PAVEMENT SHALL BE REPAIRED AS SPECIFIED AND TO MATCH EXISTING.
5. CONTRACTOR SHALL COORDINATE SUMMARY OF WORK AND SEQUENCE OF CONSTRUCTION WITH CONTRACT SPECIFICATIONS.

LIST OF ABBREVIATIONS

AB	ANCHOR BOLT
ADDL	ADDITIONAL
AFF	ABOVE FINISHED FLOOR
AGGR	AGGREGATE
ALT	ALTERNATE
ALUM	ALUMINUM
B/	BOTTOM OF
B/F	BOTTOM OF FOOTING
BTW	BETWEEN
BM	BEAM
BOT	BOTTOM
BRG	BEARING
CC	CENTER TO CENTER
CS JT	CONSTRUCTION JOINT
CL	CENTER LINE
CL JT	CONTROL JOINT
CLR	CLEAR
COL	COLUMN
CONC	CONCRETE
CONN	CONNECTION
CONST	CONSTRUCTION
CONT	CONTINUOUS
CONTR	CONTRACTOR
COORD	COORDINATE
CTRD	CENTERED
DET	DETAIL
DBL	DOUBLE
DIA	DIAMETER
Ø	DIAMETER
DIAG	DIAGONAL
DIM	DIMENSION
DIST	DISTANCE
DN	DOWN
DR	DOOR
DWG	DRAWING
DWL	DOWEL
E	EAST
EA	EACH
EF	EACH FACE
EJ	EXPANSION JOINT
EL	ELEVATION
ENGR	ENGINEER
EQ	EQUAL
EQUIP	EQUIPMENT
EW	EACH WAY
EXIST	EXISTING
EXP	EXPANSION
EXT	EXTERIOR/EXTENSION
FIN	FINISH
FLR	FLOOR
FND	FOUNDATION
FT	FEET
FTG	FOOTING
GRTG	GRATING
H PT	HIGH POINT
H	HORIZONTAL
HOR	HORIZONTAL
HT	HEIGHT
HWL	HIGH WATER LEVEL
ID	INSIDE DIAMETER
IF	INSIDE FACE
INCL	INCLUDE
INT	INTERIOR
INV	INVERT
ISO	ISOLATION
JST	JOIST
JT	JOINT
L PT	LOW POINT
L	ANGLE
LF	LINEAR FEET
LT WT	LIGHTWEIGHT
MATL	MATERIAL
MAX	MAXIMUM
MECH	MECHANICAL
MFR	MANUFACTURER
MIN	MINIMUM
MISC	MISCELLANEOUS
MULT	MULTIPLE
N	NORTH
NIC	NOT IN CONTRACT
NO	NUMBER
#	NUMBER
NOM	NOMINAL
NTS	NOT TO SCALE
OC	ON CENTER
OD	OUTSIDE DIAMETER
OF	OUTSIDE FACE
OPNG	OPENING
OPP	OPPOSITE
PL	PLATE
PAR	PARALLEL
PERP	PERPENDICULAR
PIL	PILASTER
QTY	QUANTITY
RAD	RADIUS
REINF	REINFORCEMENT
REM	REMOVE / REMAINING
REP	REPAIR
REQD	REQUIRED
S	SOUTH
SCH	SCHEDULE
SECT	SECTION
SF	SQUARE FOOT
SHT	SHEET
SIM	SIMILAR
SPEC	SPECIFICATION
SQ	SQUARE
SS	STAINLESS STEEL
STIRR	STIRRUPS
STL	STEEL
STRUC	STRUCTURAL / STRUCTURE
SUR	SURFACE
SYM	SYMMETRICAL
T & B	TOP AND BOTTOM
T	TOP
T/S	TOP OF SLAB
T/W	TOP OF WALL
TEMP	TEMPORARY
THK	THICK
TK	TANK
TYP	TYPICAL
UNO	UNLESS NOTED OTHERWISE
W/	WITH
W/O	WITHOUT
WP	WORKING POINT
WS	WATERSTOP
WT	WEIGHT
WWF	WELDED WIRE FABRIC

0 100 200 300 400'

SCALE 1"=200' AT ORIGINAL SIZE

AERIAL IMAGERY VIA MICROSOFT PRODUCT SCREENSHOT(S) REPRINTED WITH PERMISSION FROM MICROSOFT CORPORATION, ACCESSED JUNE 2018.

1 CENTRAL DISTRICT WWTP - SITE PLAN
SCALE: 1" = 200'

No.	Issue	Drawn	Approved	Date
0	FOR BID	JAR	AB	AUG 2018

MIAMI-DADE COUNTY

Bar is one inch on original size sheet
0 1"

Reuse of Documents
This document and the ideas and designs incorporated herein, as an instrument of professional service, is the property of GHD and shall not be reused in whole or in part for any other project without GHD's written authorization.
© 2018 GHD

SEAN H ANDERSON LICENSE No. 84899 STATE OF FLORIDA PROFESSIONAL ENGINEER

GHD
800 Governor's Square Blvd, Suite 410
Miami Lakes FL 33016 USA
T 1 786 334 6392 W www.ghd.com

This document shall not be used for construction unless signed and sealed for construction.

Drawn	J. RIDDLE	Designer	S. ANDERSON
Drafting Check	J. RIDDLE	Design Check	J. ROSMAN
Project Director	A. BURBANO	Date	AUGUST 2018
		Scale	1" = 200'

Client: MIAMI-DADE WATER AND SEWER DEPARTMENT
Project: **CDWWTP PLANT 1 CLARIFIER BASIN No. 3 STRUCTURAL REHABILITATION**
Title: GENERAL LEGEND, LIST OF ABBREVIATIONS, DRAWING NOTES & SITE PLAN
Project No. GHD #11152351 - CONSENT DECREE PROJECT 2.07(3) PCTS NO. 13280
Original Size: ANSI D
Sheet No. C001
Sheet 2 of 10

Plot Date: 20 August 2018 - 4:28 PM Plotted By: Sean Anderson Filename: N:\US\Tampa\Projects\Legacy\Projects\8-chars\11------\11115----\111523--\11152351\Design\CAD\Drawings\Tank 3\Civil\11152351-T3-C001.dwg

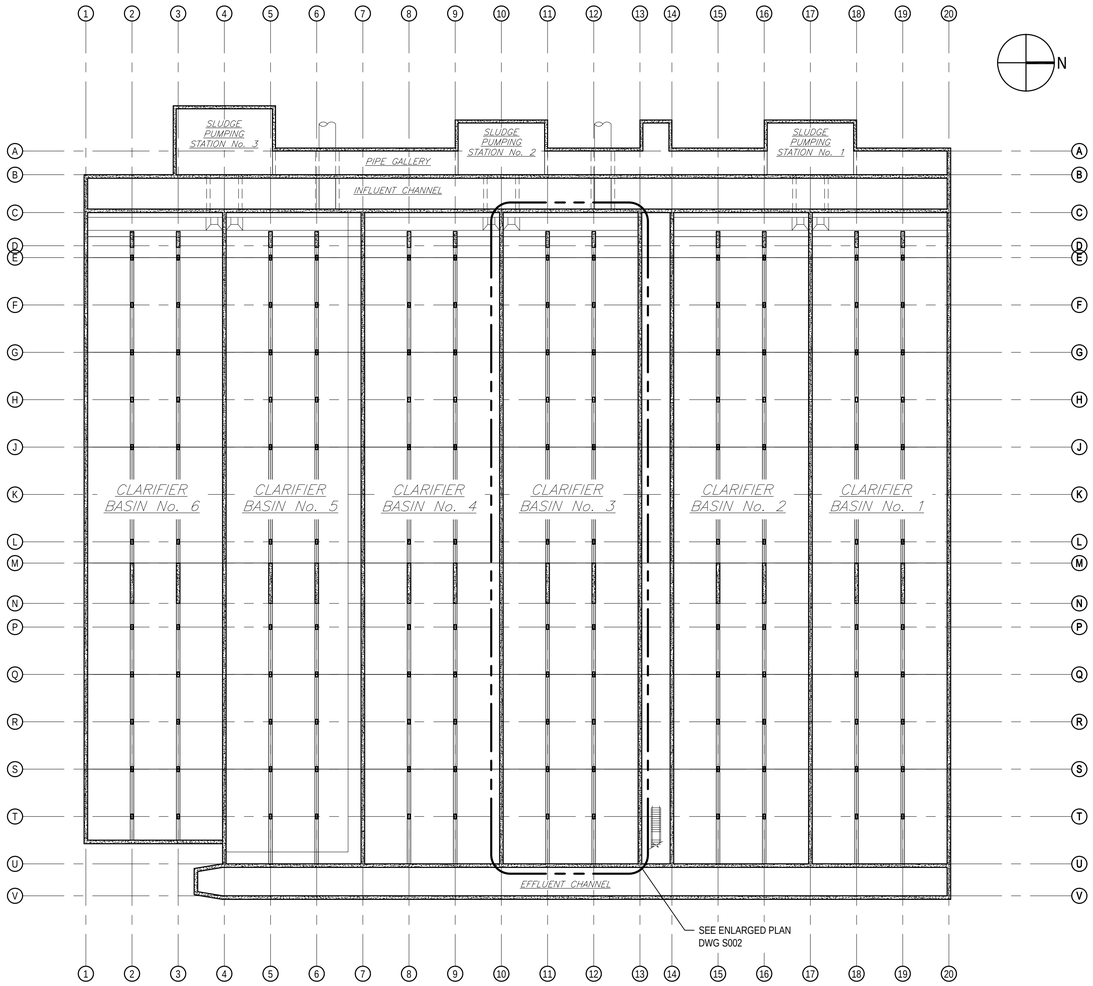

1 CLARIFIER FACILITY - LOWER PLAN

SCALE: 1/32"=1'-0"

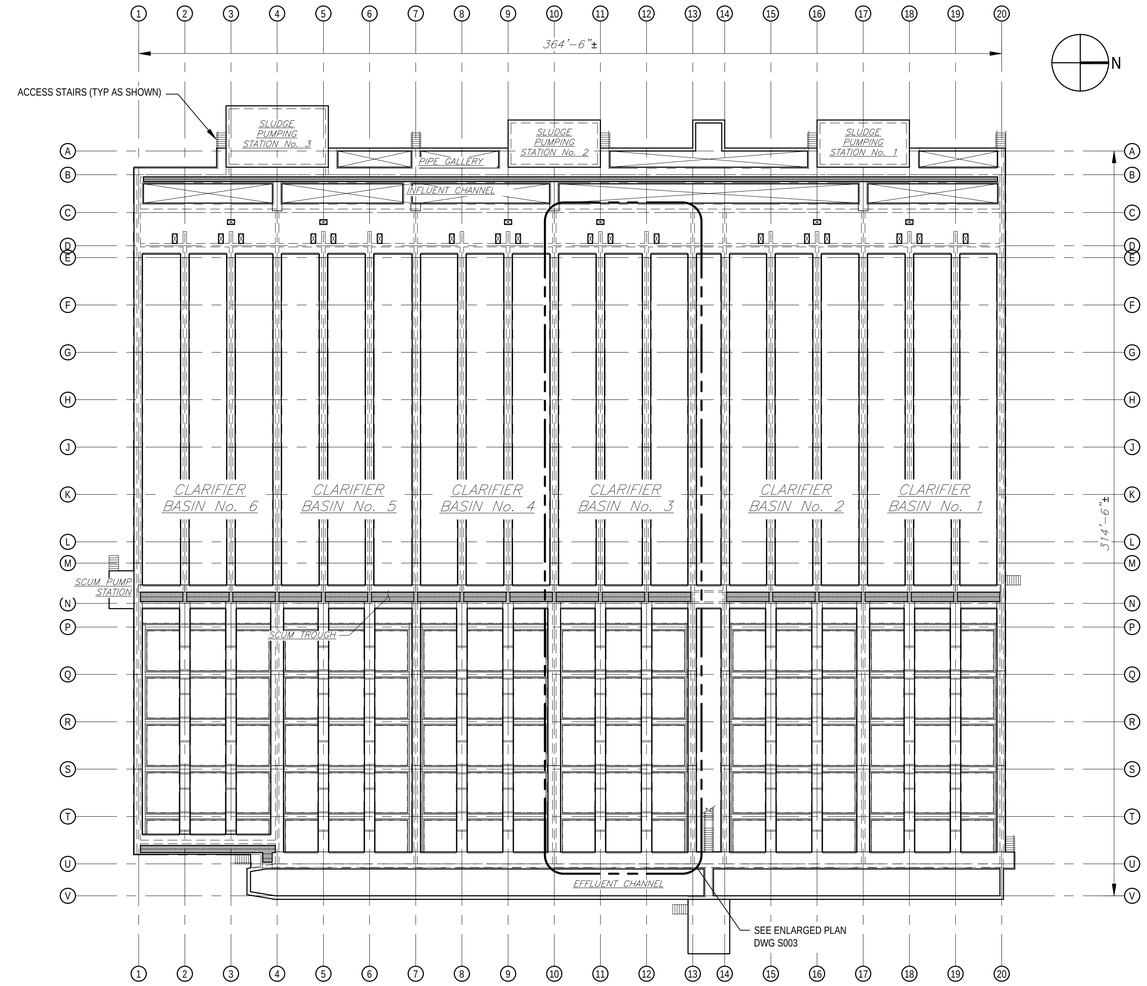

2 CLARIFIER FACILITY - UPPER PLAN

SCALE: 1/32"=1'-0"

EXISTING CONDITIONS NOTE:

1. CLARIFIER BASIN NO. 3 IS REPORTEDLY COATED WITH "RHINO LINING". CONTRACTOR SHALL CONSIDER THIS WHEN SUBMITTING BID. REFER TO SPECIFICATION SECTION 01010A.

0 16'-0" 32'-0" 48'-0" 64'-0"

SCALE 1/32"=1'-0" AT ORIGINAL SIZE

No.	Issue	Drawn	Approved	Date
0	FOR BID	SHA	AB	AUG 2018

MIAMI-DADE COUNTY

Bar is one inch on original size sheet

0 1"

Reuse of Documents

This document and the ideas and designs incorporated herein, as an instrument of professional service, is the property of GHD and shall not be reused in whole or in part for any other project without GHD's written authorization.

© 2018 GHD

SEAN H. ANDERSON LICENSE No. 84899 STATE OF FLORIDA PROFESSIONAL ENGINEER

GHD

800 Governor's Square Blvd, Suite 410
Miami Lakes FL 33016 USA
T 1 786 334 6392 **W** www.ghd.com

Drawn	S. ANDERSON	Designer	S. ANDERSON
Drafting Check	J. RIDDLE	Design Check	J. ROSMAN
Project Director	A. BURBANO	Date	AUGUST 2018
This document shall not be used for construction unless signed and sealed for construction.		Scale	1/32" = 1'-0"

Client MIAMI-DADE WATER AND SEWER DEPARTMENT

Project **CDWWTP PLANT 1 CLARIFIER BASIN No. 3 STRUCTURAL REHABILITATION**

Title CLARIFIER FACILITY
OVERALL LOWER AND UPPER PLANS

Project No. GHD #11152351 - CONSENT DECREE PROJECT 2.07(3) PCTS NO. 13280

Original Size ANSI D

Sheet No. S001

Sheet 3 of 10

Plot Date: 20 August 2018 - 4:29 PM Plotted By: Sean Anderson Filename: N:\US\Tampa\Projects\Legacy\Projects\8-chars\11------\11115----\111523--\11152351\Design\CAD\Drawings\Tank 3\Structural\11152351-T3-S001.dwg

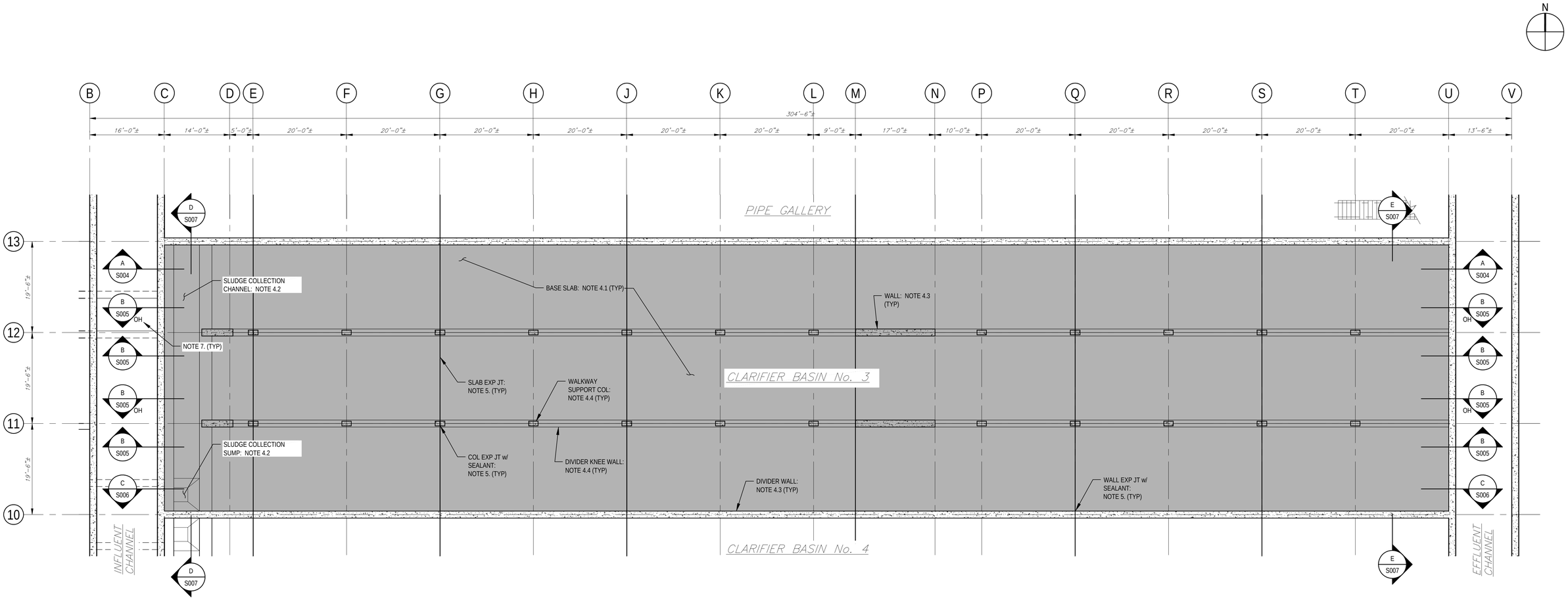

1 CLARIFIER BASIN No. 3 - LOWER PLAN

SCALE: 3/32"=1'-0"

LOWER PLAN REPAIR NOTES:

1. EXTENT OF REPAIR AREA IS INDICATED BY SHADED AREA.
2. BASIN WILL NOT BE INSPECTED PRIOR TO BID. INSPECTION WILL OCCUR FOLLOWING REMOVAL OF LINER AND COMPLETION OF SURFACE PREPARATION. ENGINEER SHALL DETERMINE EXTENT OF REPAIRS REQUIRED. CONTRACTOR SHALL MAKE REPAIRS AS DIRECTED BY THE ENGINEER IN ACCORDANCE WITH THE REPAIR DETAILS SHOWN ON DWG S008.
3. MECHANICAL AND ELECTRICAL EQUIPMENT IS NOT SHOWN ON THIS PLAN. MIAMI-DADE IS RESPONSIBLE FOR DEMOLISHING AND RE-INSTALLING THE CLARIFIER FLIGHT MECHANISMS. INFORMATION REGARDING GATES, WEIRS, ETC CAN BE OBTAINED EITHER THROUGH SITE VISIT OR THROUGH EXAMINATION OF RECORD DRAWINGS PROVIDED IN THE CONTRACT DOCUMENTS. CONTRACTOR IS **NOT** REQUIRED TO REMOVE ANY PIPING OR EQUIPMENT AS PART OF THIS WORK. FOR EQUIPMENT LEFT IN PLACE BY THE DEPARTMENT, CONTRACTOR SHALL MASK OFF THE ITEM PRIOR TO COATING (REFER SECTION 01010A, ARTICLE 1.05.A.4). REFER SECTION 01010A, ARTICLE 1.04.B.9.h. FOR TREATMENT OF VALVES/GATES.
4. AREAS TO BE EPOXY-COATED ON THIS PLAN ARE AS FOLLOWS:
   - 4.1. **BASE SLAB SHALL NOT RECEIVE EPOXY COATING.** SLAB SHALL RECEIVE WATER CLEANING ONLY.
   - 4.2. SLUDGE COLLECTION CHANNEL AND SUMP
   - 4.3. ALL WALL SURFACES (EXCLUDING EXTERIOR FACES OF EXTERIOR WALLS)
   - 4.4. ALL COLUMN AND KNEE-WALL SURFACES
5. ALL EXISTING JOINT SEALS SHALL BE REMOVED AND REPLACED PER SPEC 03732. REPAIR CONCRETE AT SLAB JOINTS AS REQUIRED PER DETAIL 6, DWG S008.
6. CONTRACTOR SHALL COORDINATE SCOPE AND SEQUENCE OF WORK WITH PROJECT SPECIFICATIONS, SPECIFICALLY SECTIONS 01010A AND 01120A.
7. "OH" DENOTES "OPPOSITE HAND". VIEWS DESIGNATED THUS ARE MIRROR IMAGES OF THE VIEW BEING REFERRED.

0 8'-0" 16'-0" 24'-0"
SCALE 3/32"=1'-0" AT ORIGINAL SIZE

No.	Issue	Drawn	Approved	Date
0	FOR BID	SHA	AB	AUG 2018

MIAMI-DADE COUNTY

Bar is one inch on original size sheet
0 1"

Reuse of Documents
This document and the ideas and designs incorporated herein, as an instrument of professional service, is the property of GHD and shall not be reused in whole or in part for any other project without GHD's written authorization.
© 2018 GHD

SEAN H. ANDERSON LICENSE No. 64899 STATE OF FLORIDA PROFESSIONAL ENGINEER

GHD
800 Governor's Square Blvd, Suite 410
Miami Lakes FL 33016 USA
T 1 786 334 6392 W www.ghd.com

This document shall not be used for construction unless signed and sealed for construction.

Drawn	S. ANDERSON	Designer	S. ANDERSON
Drafting Check	J. RIDDLE	Design Check	J. ROSMAN
Project Director	A. BURBANO	Date	AUGUST 2018
		Scale	3/32" = 1'-0"

Client MIAMI-DADE WATER AND SEWER DEPARTMENT
Project **CDWWTP PLANT 1 CLARIFIER BASIN No. 3 STRUCTURAL REHABILITATION**
Title CLARIFIER BASIN No. 3 - LOWER PLAN
Project No. GHD #11152351 - CONSENT DECREE PROJECT 2.07(3) PCTS NO. 13280
Original Size ANSI D
Sheet No. S002
Sheet 4 of 10

Plot Date: 20 August 2018 - 4:29 PM Plotted By: Sean Anderson Filename: N:\US\Tampa\Projects\Legacy\Projects\8-chars\11------\11115----\111523--\11152351\Design\CAD\Drawings\Tank 3\Structural\11152351-T3-S002.dwg

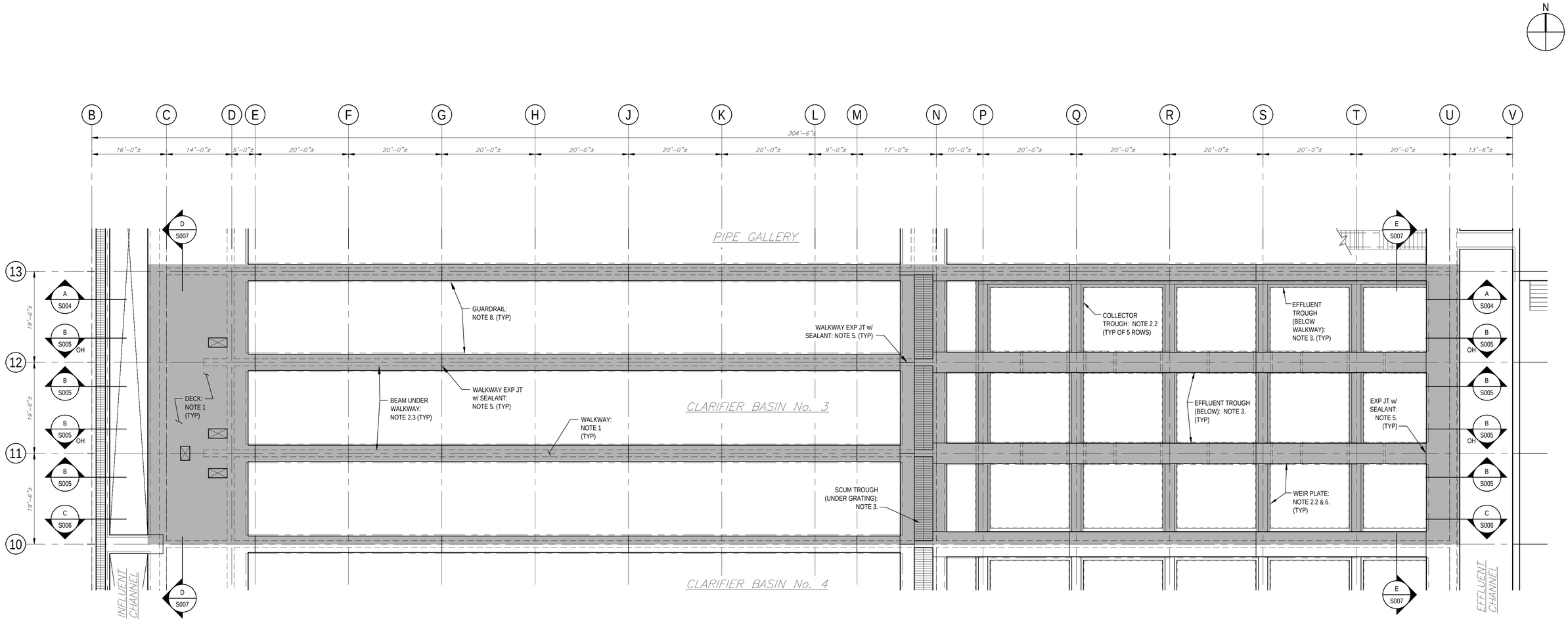

1 CLARIFIER BASIN No. 3 - UPPER PLAN

SCALE: 3/32"=1'-0"

UPPER PLAN REPAIR NOTES:

1. EXTENT OF REPAIR AREA IS INDICATED BY SHADED AREA. HOWEVER, EXTENT OF REPAIR TO UPPER DECK AND WALKWAYS IS LIMITED TO REPLACEMENT OF JOINT SEALANT AND REPAIR OF ANY CRACKS OR SPALLS. COATING OF THE UPPER DECK AND WALKWAYS, INCLUDING THE SIDES OF THESE ITEMS, IS **NOT** REQUIRED UNDER THIS CONTRACT. COATING OF EXTERIOR FACES OF EXTERIOR WALL SURFACES IS **NOT** REQUIRED.

2. AREAS TO BE EPOXY-COATED ON THIS PLAN ARE AS FOLLOWS:

   2.1. BOTTOM SURFACES (SOFFIT) OF WALKWAYS AND ELEVATED SLABS

   2.2. SIDES, BOTTOM AND INTERIOR SURFACES OF ELEVATED COLLECTION TROUGHS, INCLUDING BOTH FACES OF THE WEIR PLATES. (**DO NOT ABRASIVE BLAST THE WEIR PLATES. WATER-BLAST CLEAN ONLY**)

   2.3. ALL SIDES OF ALL CONCRETE BEAMS.

   2.4. SCUM TROUGH EXTERIOR SURFACES AND INTERIOR SURFACES AS DENOTED IN ITEM 3. BELOW.

3. SCUM TROUGH MUST REMAIN IN SERVICE FOR CLARIFIERS 1, 2, 4, 5 & 6. DEPARTMENT WILL PROVIDE AND INSTALL BULKHEADS AND BYPASS TO ALLOW CLEANING AND COATING OF SCUM TROUGH INTERIOR SURFACES FOR CLARIFER No. 3.

4. CONTRACTOR SHALL COORDINATE SCOPE AND SEQUENCE OF WORK WITH PROJECT SPECIFICATIONS.

5. ALL EXISTING JOINT SEALS SHALL BE REMOVED AND REPLACED PER SPEC 03732.

6. WEIR PLATES OCCUR ALONG THE SIDES OF ALL COLLECTOR AND EFFLUENT TROUGHS.

7. REFER "LOWER PLAN REPAIR NOTES" ON DWG S002 FOR ADDITIONAL INFORMATION

8. PROTECT GUARDRAIL DURING BLASTING OPERATIONS USING PLYWOOD SHEETS OR OTHER SUITABLE MATERIAL.

0 8'-0" 16'-0" 24'-0"

SCALE 3/32"=1'-0" AT ORIGINAL SIZE

No.	Issue	Drawn	Approved	Date
0	FOR BID	SHA	AB	AUG 2018

MIAMI-DADE COUNTY

Bar is one inch on original size sheet
0 1"

Reuse of Documents
This document and the ideas and designs incorporated herein, as an instrument of professional service, is the property of GHD and shall not be reused in whole or in part for any other project without GHD's written authorization.
© 2018 GHD

SEAN H ANDERSON LICENSE No. 34899 STATE OF FLORIDA PROFESSIONAL ENGINEER

GHD
800 Governor's Square Blvd, Suite 410
Miami Lakes FL 33016 USA
T 1 786 334 6392 W www.ghd.com

Drawn	S. ANDERSON	Designer	S. ANDERSON
Drafting Check	J. RIDDLE	Design Check	J. ROSMAN
Project Director	A. BURBANO	Date	AUGUST 2018
This document shall not be used for construction unless signed and sealed for construction.		Scale	3/32" = 1'-0"

Client MIAMI-DADE WATER AND SEWER DEPARTMENT
Project **CDWWTP PLANT 1 CLARIFIER BASIN No. 3 STRUCTURAL REHABILITATION**
Title CLARIFIER BASIN No. 3 - UPPER PLAN
Project No. GHD #11152351 - CONSENT DECREE PROJECT 2.07(3) PCTS NO. 13280
Original Size ANSI D
Sheet No. S003
Sheet 5 of 10

Plot Date: 20 August 2018 - 4:30 PM Plotted By: Sean Anderson Filename: N:\US\Tampa\Projects\Legacy\Projects\8-chars\11------\11115----\111523--\11152351\Design\CAD\Drawings\Tank 3\Structural\11152351-T3-S003.dwg

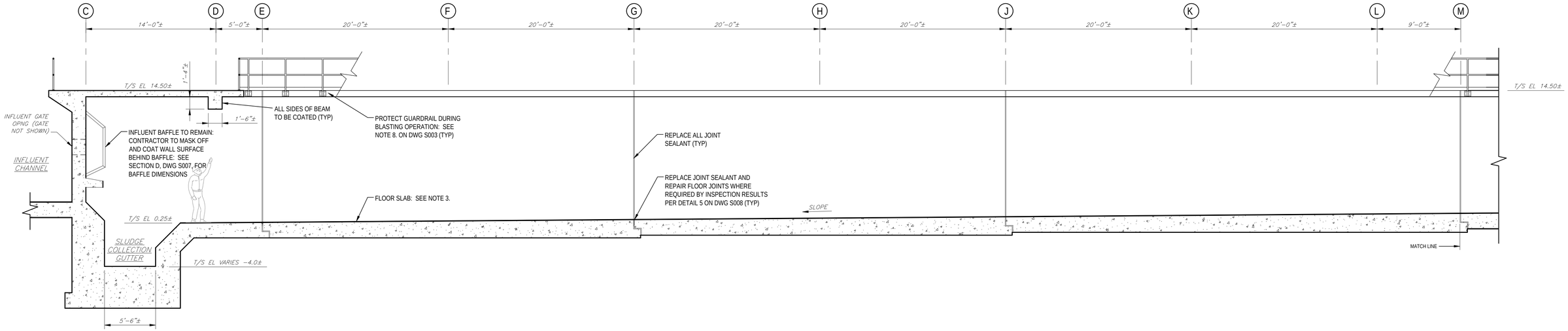

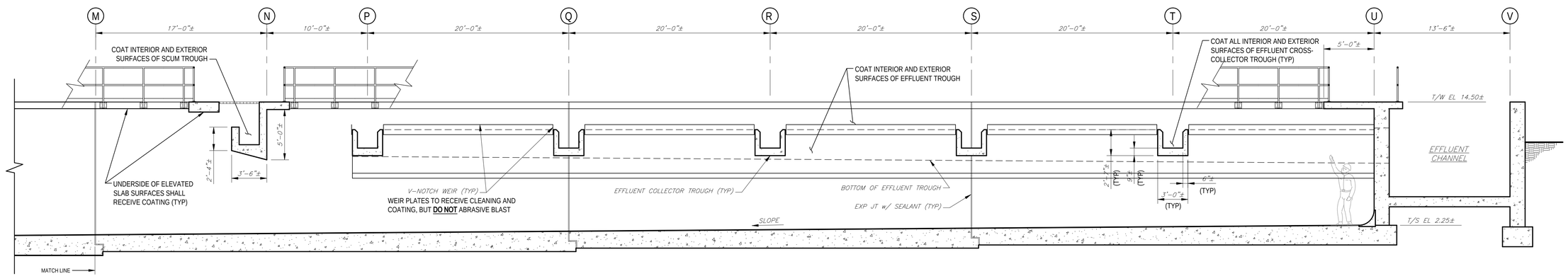

SECTION - NORTH DIVIDER WALL LOOKING NORTH

S002 A S003

SCALE: 3/16"=1'-0"

NOTES:

1. FOR EXTENT OF REPAIR AREA AND SPECIFIC ITEMS TO BE COATED, SEE DWGS S002 & S003.
2. FOR CONCRETE REPAIR DETAILS, SEE DWG S008.
3. FLOOR SLAB SHALL BE CLEANED AND REPAIRED AS NEEDED (PER UPCOMING INSPECTION), BUT **SHALL NOT** RECEIVE ABRASIVE BLASTING, RESURFACING MORTAR OR EPOXY COATING.

0 4'-0" 8'-0" 12'-0"

SCALE 3/16"=1'-0" AT ORIGINAL SIZE

No.	Issue	Drawn	Approved	Date
0	FOR BID	SHA	AB	AUG 2018

MIAMI-DADE COUNTY

Bar is one inch on original size sheet

0 1"

Reuse of Documents

This document and the ideas and designs incorporated herein, as an instrument of professional service, is the property of GHD and shall not be reused in whole or in part for any other project without GHD's written authorization.

© 2018 GHD

SEAN H. ANDERSON LICENSE No. 84899 STATE OF FLORIDA PROFESSIONAL ENGINEER

GHD

800 Governor's Square Blvd, Suite 410
Miami Lakes FL 33016 USA
T 1 786 334 6392 **W** www.ghd.com

Drawn	S. ANDERSON	Designer	S. ANDERSON
Drafting Check	J. RIDDLE	Design Check	J. ROSMAN
Project Director	A. BURBANO	Date	AUGUST 2018
This document shall not be used for construction unless signed and sealed for construction.		Scale	3/16" = 1'-0"

Client MIAMI-DADE WATER AND SEWER DEPARTMENT

Project **CDWWTP PLANT 1 CLARIFIER BASIN No. 3 STRUCTURAL REHABILITATION**

Title CLARIFIER BASIN No. 3 - SECTION A

Project No. GHD #11152351 - CONSENT DECREE PROJECT 2.07(3) PCTS NO. 13280

Original Size ANSI D

Sheet No. S004

Sheet 6 of 10

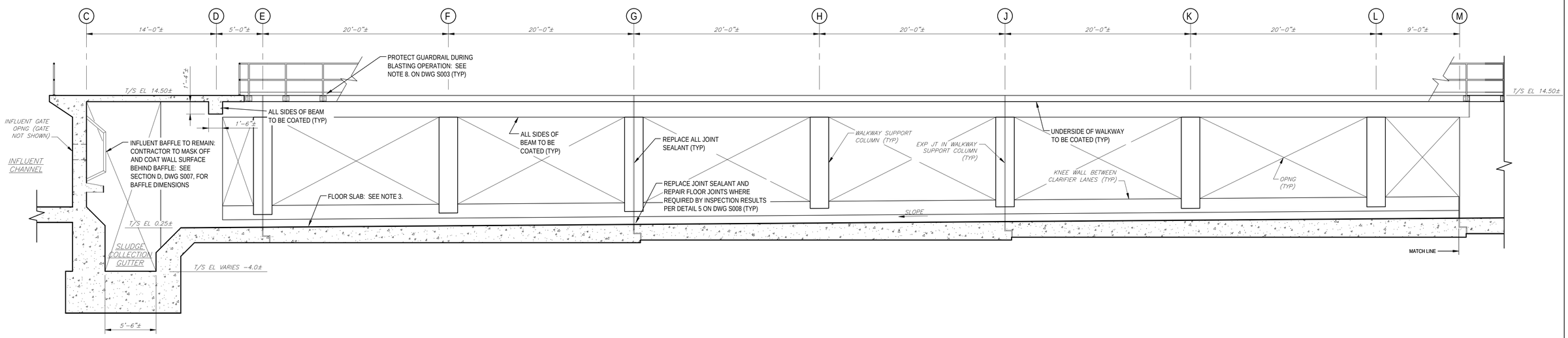

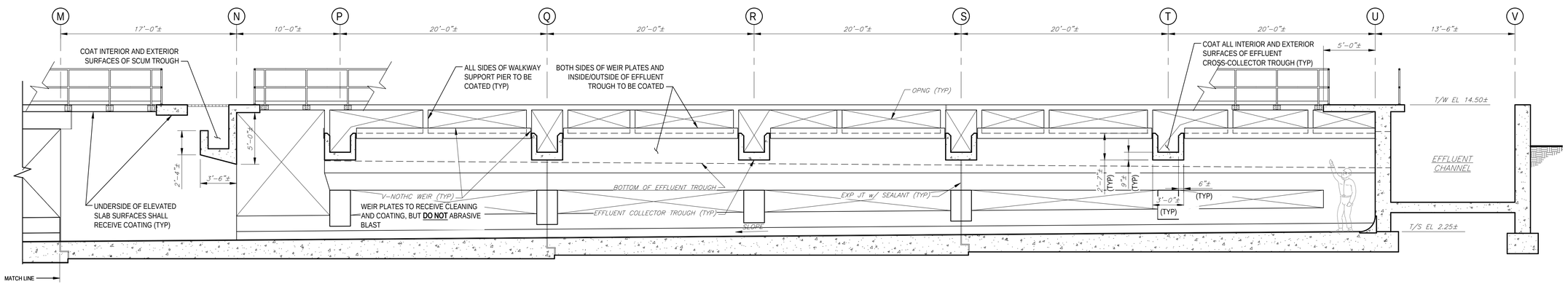

B — SECTION - INTERIOR WALL LOOKING NORTH

S002 / S003

SCALE: 3/16"=1'-0"

NOTES:

1. FOR EXTENT OF REPAIR AREA AND SPECIFIC ITEMS TO BE COATED, SEE DWGS S002 & S003.
2. FOR CONCRETE REPAIR DETAILS, SEE DWG S008.
3. FLOOR SLAB SHALL BE CLEANED AND REPAIRED AS NEEDED (PER UPCOMING INSPECTION), BUT **SHALL NOT** RECEIVE ABRASIVE BLASTING, RESURFACING MORTAR OR EPOXY COATING.

0 4'-0" 8'-0" 12'-0"

SCALE 3/16"=1'-0" AT ORIGINAL SIZE

No.	Issue	Drawn	Approved	Date
0	FOR BID	SHA	AB	AUG 2018

MIAMI-DADE COUNTY

Bar is one inch on original size sheet

0 1"

Reuse of Documents

This document and the ideas and designs incorporated herein, as an instrument of professional service, is the property of GHD and shall not be reused in whole or in part for any other project without GHD's written authorization.

© 2018 GHD

SEAN H ANDERSON — LICENSE No. 84999 — STATE OF FLORIDA — PROFESSIONAL ENGINEER

GHD
800 Governor's Square Blvd, Suite 410
Miami Lakes FL 33016 USA
T 1 786 334 6392 W www.ghd.com

This document shall not be used for construction unless signed and sealed for construction.

Drawn	S. ANDERSON	Designer	S. ANDERSON
Drafting Check	J. RIDDLE	Design Check	J. ROSMAN
Project Director	A. BURBANO	Date	AUGUST 2018
		Scale	3/16" = 1'-0"

Client: MIAMI-DADE WATER AND SEWER DEPARTMENT

Project: **CDWWTP PLANT 1 CLARIFIER BASIN No. 3 STRUCTURAL REHABILITATION**

Title: CLARIFIER BASIN No. 3 - SECTION B

Project No. GHD #11152351 - CONSENT DECREE PROJECT 2.07(3) PCTS NO. 13280

Original Size: ANSI D

Sheet No. S005

Sheet 7 of 10

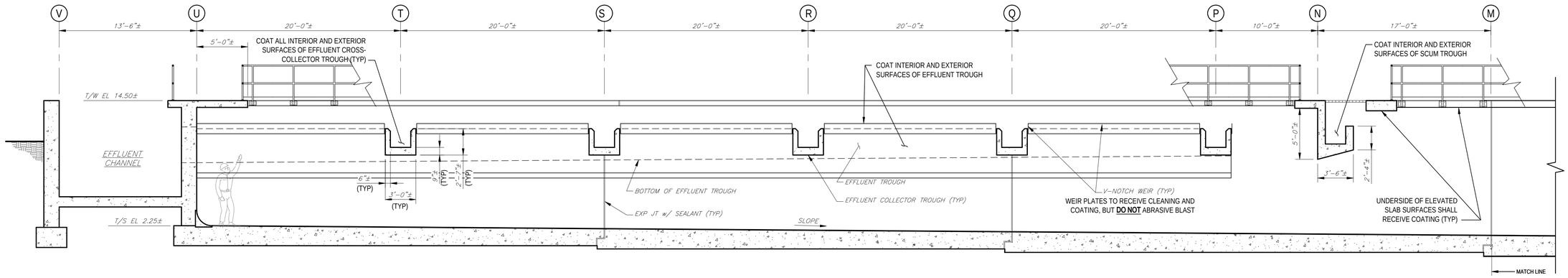

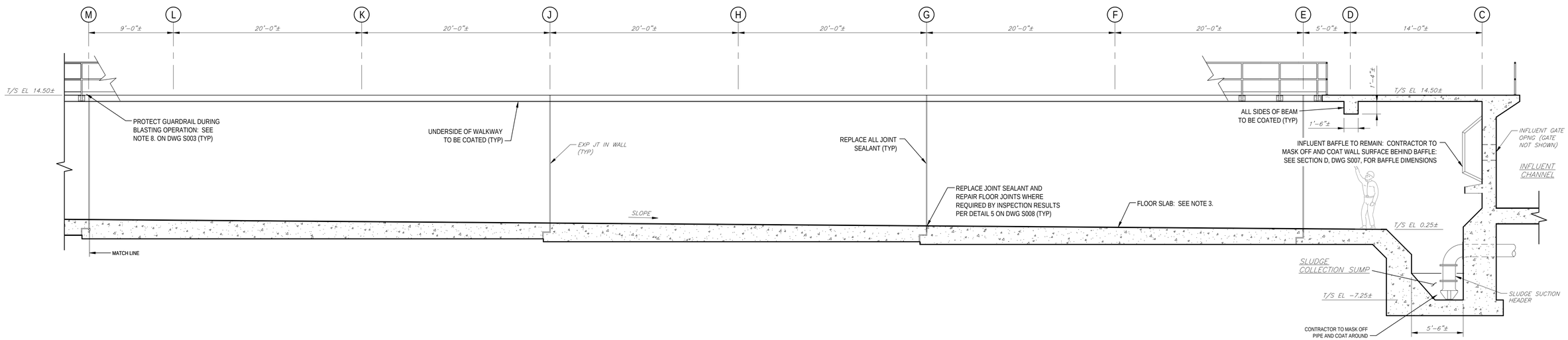

SECTION AT SOUTH DIVIDER WALL LOOKING SOUTH

S002 / C / S003

SCALE: 3/16"=1'-0"

NOTES:

1. FOR EXTENT OF REPAIR AREA AND SPECIFIC ITEMS TO BE COATED, SEE DWGS S002 & S003.
2. FOR CONCRETE REPAIR DETAILS, SEE DWG S008.
3. FLOOR SLAB SHALL BE CLEANED AND REPAIRED AS NEEDED (PER UPCOMING INSPECTION), BUT **SHALL NOT** RECEIVE ABRASIVE BLASTING, RESURFACING MORTAR OR EPOXY COATING.

0 4'-0" 8'-0" 12'-0"

SCALE 3/16"=1'-0" AT ORIGINAL SIZE

No.	Issue	Drawn	Approved	Date
0	FOR BID	SHA	AB	AUG 2018

MIAMI-DADE COUNTY

Bar is one inch on original size sheet

0 1"

Reuse of Documents

This document and the ideas and designs incorporated herein, as an instrument of professional service, is the property of GHD and shall not be reused in whole or in part for any other project without GHD's written authorization.

© 2018 GHD

SEAN H. ANDERSON LICENSE No. 34899 STATE OF FLORIDA PROFESSIONAL ENGINEER

GHD
800 Governor's Square Blvd, Suite 410
Miami Lakes FL 33016 USA
T 1 786 334 6392 W www.ghd.com

Drawn	S. ANDERSON	Designer	S. ANDERSON
Drafting Check	J. RIDDLE	Design Check	J. ROSMAN
Project Director	A. BURBANO	Date	AUGUST 2018
This document shall not be used for construction unless signed and sealed for construction.		Scale	3/16" = 1'-0"

Client: MIAMI-DADE WATER AND SEWER DEPARTMENT

Project: **CDWWTP PLANT 1 CLARIFIER BASIN No. 3 STRUCTURAL REHABILITATION**

Title: CLARIFIER BASIN No. 3 - SECTION C

Project No. GHD #11152351 - CONSENT DECREE PROJECT 2.07(3) PCTS NO. 13280

Original Size: ANSI D

Sheet No. S006

Sheet 8 of 10

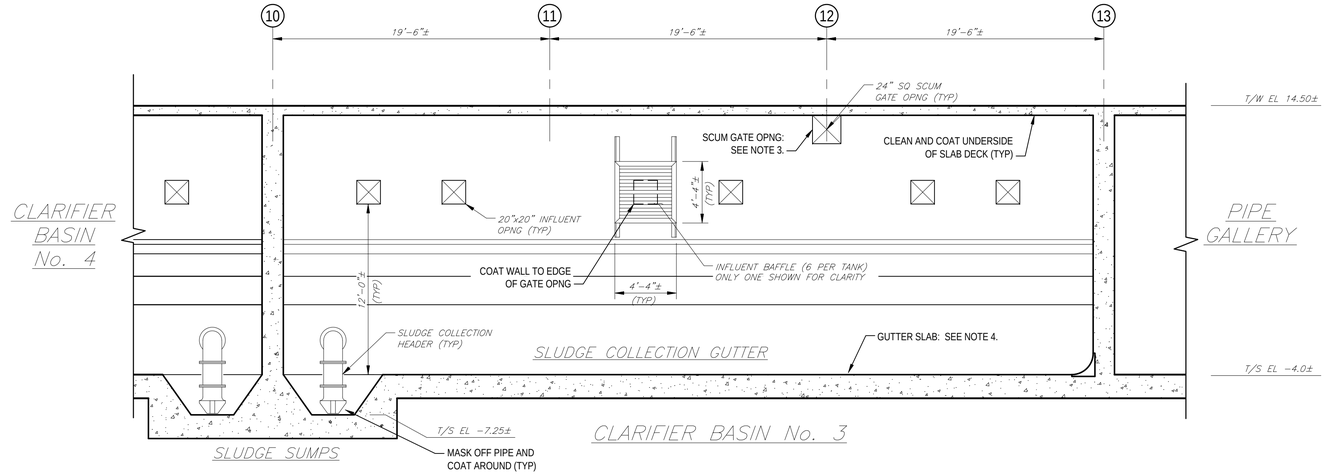

D / S002 S003 SECTION AT INFLUENT WALL LOOKING WEST

SCALE: 3/16"=1'-0"

NOTES:

1. FOR EXTENT OF REPAIR AREA AND SPECIFIC ITEMS TO BE COATED, SEE DWGS S002 & S003.
2. FOR CONCRETE REPAIR DETAILS, SEE DWG S008.
3. COAT INSIDE SURFACES OF SCUM GATE OPENING: MASK OFF GATE AND FRAME (BEYOND) AS REQUIRED TO AVOID AFFECTING GATE OPERATION.
4. FLOOR SLAB SHALL BE CLEANED AND REPAIRED AS NEEDED (PER UPCOMING INSPECTION), BUT **SHALL NOT** RECEIVE ABRASIVE BLASTING, RESURFACING MORTAR OR EPOXY COATING.

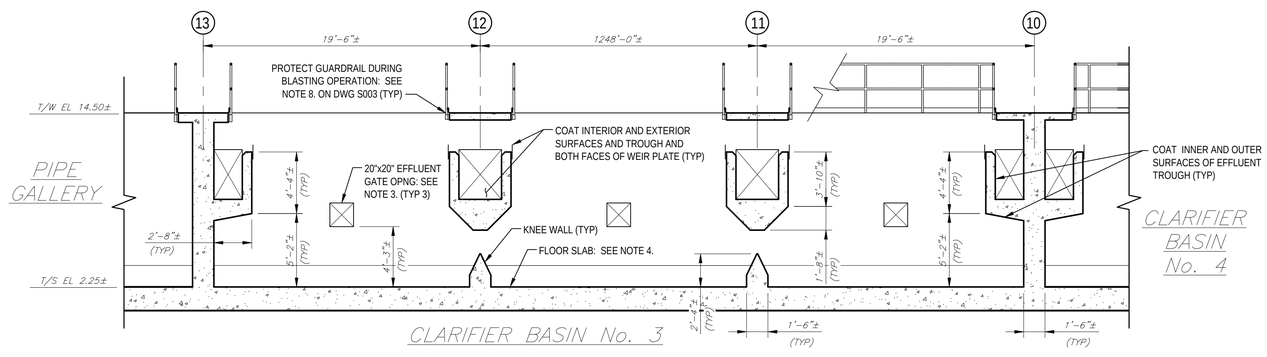

E / S002 S003 SECTION AT EFFLUENT WALL LOOKING EAST

SCALE: 3/16"=1'-0"

NOTES:

1. FOR EXTENT OF REPAIR AREA AND SPECIFIC ITEMS TO BE COATED, SEE DWGS S002 & S003.
2. FOR CONCRETE REPAIR DETAILS, SEE DWG S008.
3. COAT INSIDE SURFACES OF EFFLUENT GATE OPENING: MASK OFF GATE AND FRAME (BEYOND) AS REQUIRED TO AVOID AFFECTING GATE OPERATION.
4. FLOOR SLAB SHALL BE CLEANED AND REPAIRED AS NEEDED (PER UPCOMING INSPECTION), BUT **SHALL NOT** RECEIVE ABRASIVE BLASTING, RESURFACING MORTAR OR EPOXY COATING.

0 4'-0" 8'-0" 12'-0"
SCALE 3/16"=1'-0" AT ORIGINAL SIZE

No.	Issue	Drawn	Approved	Date
0	FOR BID	SHA	AB	AUG 2018

MIAMI-DADE COUNTY

Bar is one inch on original size sheet
0 1"

Reuse of Documents
This document and the ideas and designs incorporated herein, as an instrument of professional service, is the property of GHD and shall not be reused in whole or in part for any other project without GHD's written authorization.
© 2018 GHD

SEAN H. ANDERSON LICENSE No. 84899 STATE OF FLORIDA PROFESSIONAL ENGINEER

GHD
800 Governor's Square Blvd, Suite 410
Miami Lakes FL 33016 USA
T 1 786 334 6392 W www.ghd.com

This document shall not be used for construction unless signed and sealed for construction.

Drawn	S. ANDERSON	Designer	S. ANDERSON
Drafting Check	J. RIDDLE	Design Check	J. ROSMAN
Project Director	A. BURBANO	Date	AUGUST 2018
		Scale	3/16" = 1'-0"

Client MIAMI-DADE WATER AND SEWER DEPARTMENT
Project **CDWWTP PLANT 1 CLARIFIER BASIN No. 3 STRUCTURAL REHABILITATION**
Title CLARIFIER BASIN No. 3 - SECTIONS D & E
Project No. GHD #11152351 - CONSENT DECREE PROJECT 2.07(3) PCTS NO. 13280
Original Size ANSI D
Sheet No. S007
Sheet 9 of 10

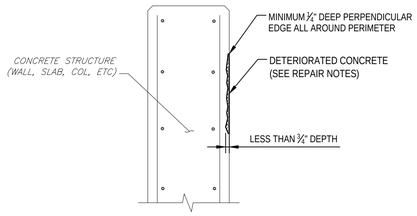

SECTION

REPAIR NOTES:

1. CONCRETE SURFACE SHALL BE PRESSURE-WASHED FOLLOWED BY ABRASIVE BLASTING PER SPECIFICATION SECTION 03721.
2. REMOVE LOOSE MATERIAL FROM DETERIORATED LOCATION UNTIL SOUND CONCRETE IS EXPOSED.
3. PRESSURE CLEAN ALL REMAINING EXPOSED AREAS WITH AIR-BLAST.
4. REPAIR THE CONCRETE BY PATCHING WITH APPROVED REPAIR MORTAR AS SPECIFIED IN SECTION 03732.

AREA WITH MINOR DAMAGE LESS THAN ¾" DEPTH
(CONCRETE SURFACE DETERIORATED WITHOUT SPALLING)

1 / S008 REPAIR DETAIL - "TYPE 1"
NOT TO SCALE

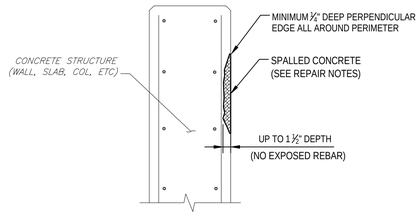

SECTION

REPAIR NOTES:

1. CONCRETE SURFACE SHALL BE PRESSURE-WASHED FOLLOWED BY ABRASIVE BLASTING PER SPECIFICATION SECTION 03721.
2. REMOVE LOOSE MATERIAL FROM DETERIORATED LOCATION UNTIL SOUND CONCRETE IS EXPOSED.
3. PRESSURE CLEAN ALL REMAINING EXPOSED AREAS WITH AIR-BLAST.
4. REPAIR THE CONCRETE BY PATCHING SPALLED AREA WITH APPROVED REPAIR MORTAR AS SPECIFIED IN SECTION 03732. TAMP MORTAR INTO PLACE. DO NOT FEATHER EDGES.

SPALLED CONCRETE LESS THAN 1 1/2" DEPTH
(REINFORCING STEEL NOT EXPOSED)

2 / S008 REPAIR DETAIL - "TYPE 2"
NOT TO SCALE

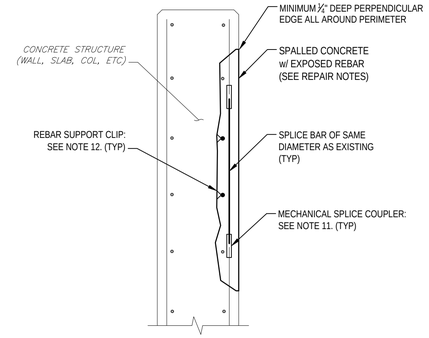

SECTION X-X

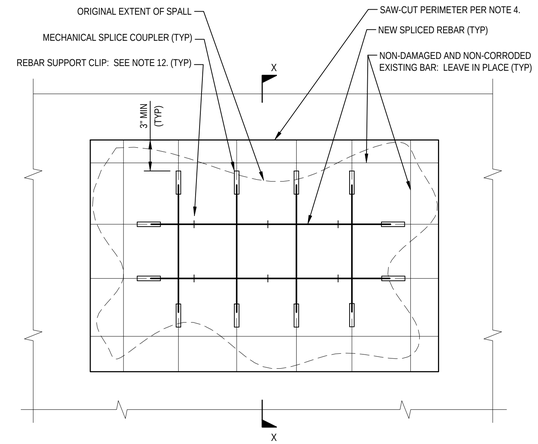

ELEVATION

REPAIR NOTES:

1. DETAILS SHOWN ABOVE ARE FOR REPAIR METHOD USING MECHANICAL SPLICE COUPLERS. OTHER APPROVED SPLICING METHODS ARE ALLOWABLE. SEE ITEM 8 BELOW AND SPECIFICATION SECTION 03200.
2. AREA TO BE REPAIRED SHALL BE PROVIDED WITH ADEQUATE SHORING PRIOR TO START OF REPAIR WORK. WHERE DIRECTED BY THE ENGINEER, CONTRACTOR SHALL SUBMIT SHORING PLANS AND DETAILS, SIGNED AND SEALED BY A REGISTERED FLORIDA PROFESSIONAL ENGINEER, TO THE ENGINEER OF RECORD FOR REVIEW AND APPROVAL.
3. SURFACE SHALL BE PRESSURE-WASHED FOLLOWED BY ABRASIVE BLASTING PER SPECIFICATION SECTION 03721.
4. PREPARE REPAIR AREA BY SAW-CUTTING MINIMUM ¼" DEEP RECTANGULAR CONCRETE PERIMETER AROUND EXTENT OF SPALL.
5. REMOVE MINIMUM 3" DEPTH OF CONCRETE TO EXPOSE DAMAGED AND CORRODED REBAR.
6. FURTHER REMOVE LOOSE OR DEGRADED MATERIALS AS REQUIRED UNTIL SOUND CONCRETE IS OBTAINED.
7. DETERMINE EXTENT OF DAMAGED OR CORRODED REBAR, THEN CUT AND REMOVE.
8. REMOVE ADDITIONAL CONCRETE BEYOND FACE OF CUT REBAR TO PROVIDE ROOM FOR SPLICING NEW REBAR.
   - 8.1. IF LAP SPLICE METHOD IS USED, ADDITIONAL CONCRETE MUST BE REMOVED TO A DISTANCE REQUIRED FOR LAP LENGTH OF BARS, PLUS 3" IN ALL DIRECTIONS.
   - 8.2. IF MECHANICAL SPLICE COUPLER IS USED, ADDITIONAL CONCRETE MUST BE REMOVED TO FACILITATE COUPLER, PLUS 3" IN ALL DIRECTIONS.
9. WHERE EXISTING OR NEW REBAR IS LOCATED, CONCRETE MUST BE REMOVED TO ALLOW AT LEAST ¾" CLEARANCE ALL AROUND BAR. AT COUPLER LOCATIONS, PROVIDE AT LEAST 1 ½" CLEARANCE.
10. PRESSURE CLEAN EXPOSED AREAS WHERE DAMAGED CONCRETE WAS REMOVED.
11. SPLICE NEW REBAR WITH EXISTING REBAR USING CHOSEN METHOD PER ITEMS 8.1 AND 8.2. REFER TO SPECIFICATION SECTION 03200.
12. PROVIDE SUPPORT FOR NEW REINFORCEMENT AT 12" ON CENTER, MAX, USING HILTI "GUNITE CLIPS X-GCZF37", OR APPROVED EQUAL.
13. REPAIR THE CONCRETE BY PATCHING SPALLED AREA WITH APPROVED REPAIR MORTAR AS SPECIFIED IN SECTION 03732.

SPALLED CONCRETE
(REINFORCING STEEL EXPOSED)

3 / S008 REPAIR DETAIL - "TYPE 3"
NOT TO SCALE

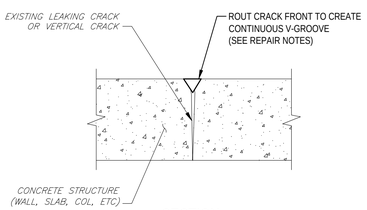

SECTION

REPAIR NOTES:

1. CONCRETE SURFACE SHALL BE PRESSURE-WASHED FOLLOWED BY ABRASIVE BLASTING PER SPECIFICATION SECTION 03721.
2. REMOVE LOOSE MATERIAL AND FORM V-GROOVE ALONG CRACK FRONT TO REACH SOUND CONCRETE.
3. PRESSURE CLEAN THE RESULTING V-GROOVE WITH AIR-BLAST FOR DRY CRACK OR WATER-BLAST FOR LEAKING CRACK.
4. PRESSURE-INJECT EPOXY INTO DRY CRACK OR URETHANE GROUT INTO LEAKING CRACK PER SECTION 03732.
5. CRACKS WIDER THAN ¼" SHALL BE TREATED AS SPALLS, EXCEPT LEAKING CRACKS SHALL BE PRESSURE-INJECTED IN ADDITION TO SPALL REPAIR. REPAIR USING EITHER "TYPE 2" OR "TYPE 3" REPAIR DETAILS, AS APPLICABLE.

LEAKING CRACK OR VERTICAL CRACK LESS THAN ¼" WIDE

4 / S008 REPAIR DETAIL - VERTICAL OR LEAKING CRACK
NOT TO SCALE

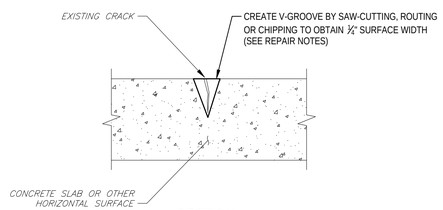

SECTION

REPAIR NOTES:

1. CONCRETE SURFACE SHALL BE PRESSURE-WASHED FOLLOWED BY ABRASIVE BLASTING PER SPECIFICATION SECTION 03721.
2. REMOVE LOOSE MATERIAL AND FORM V-GROOVE ALONG CRACK FRONT TO REACH SOUND CONCRETE.
3. PRESSURE CLEAN THE RESULTING V-GROOVE WITH AIR-BLAST.
4. GRAVITY FEED EPOXY TO FILL V-GROOVE AS SPECIFIED IN SECTION 03732.
5. CRACKS WIDER THAN ¼" SHALL BE TREATED AS SPALLS. REPAIR USING EITHER "TYPE 2" OR "TYPE 3" REPAIR DETAILS, AS APPLICABLE.

DRY HORIZONTAL SURFACE CRACK LESS THAN ¼" WIDE

5 / S008 REPAIR DETAIL - NON-LEAKING HORIZONTAL CRACK
NOT TO SCALE

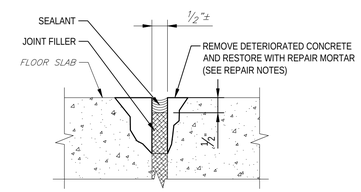

SECTION AT FLOOR JOINT

REPAIR NOTES:

1. CONCRETE SURFACE SHALL BE PRESSURE-WASHED FOLLOWED BY ABRASIVE BLASTING PER SPECIFICATION SECTION 03721.
2. REMOVE SPALLED CONCRETE AND ANY LOOSE MATERIAL ALONG THE JOINT TO REACH SOUND CONCRETE. CUT OUT EXISTING JOINT FILLER TO DEPTH OF REPAIR.
3. PRESSURE CLEAN THE FULL INTERIOR OF THE JOINT WITH AIR-BLAST.
4. INSTALL JOINT FILLER OF SAME WIDTH AS EXISTING.
5. FILL IN THE SIDES OF THE JOINT WITH REPAIR MORTAR.
6. CUT JOINT FILLER OFF TO ½" BELOW TOP OF FLOOR SURFACE AND FILL JOINT WITH SEALANT PER SECTION 03732.

CRACKS OR SPALLS ALONG EDGE OF CONSTRUCTION JOINT

6 / S008 REPAIR DETAIL - FLOOR TRANSVERSE JOINTS
NOT TO SCALE

GENERAL REPAIR NOTES:

1. PRIOR TO THE START OF ANY CONCRETE REPAIRS, ALL CONCRETE SURFACES SHALL BE CLEANED WITH PRESSURE WATER FOLLOWED BY ABRASIVE BLASTING PER SPECIFICATION SECTION 03721.
2. AFTER THE CONCRETE REPAIRS HAVE BEEN COMPLETED, CONTRACTOR SHALL APPLY A RESURFACING MORTAR AS SPECIFIED IN SECTION 03732. COATING SHALL BE APPLIED TO ALL CONCRETE SURFACES THAT ARE SCHEDULED TO RECEIVE EPOXY COATING. MORTAR SHALL BE APPLIED TO A MINIMUM THICKNESS PER THE COATING MANUFACTURER'S WRITTEN INSTRUCTIONS TO CREATE A SMOOTH, MONOLITHIC SURFACE PRIOR TO APPLYING THE EPOXY COATING.
3. ALL CONCRETE REPAIRS SHALL FOLLOW THE REQUIREMENTS OF SPECIFICATION SECTION 03732 AND RELATED SECTIONS.
4. CONTRACTOR SHALL FOLLOW ALL PRODUCT MANUFACTURER'S RECOMMENDATIONS AND SPECIFICATIONS. ALL MANUFACTURER'S RECOMMENDATIONS TO THE CONTRACTOR SHALL BE WRITTEN AND SUBMITTED TO THE ENGINEER FOR THE RECORD. APPLICATION OF PROTECTIVE EPOXY COATING SHALL NOT COMMENCE UNTIL THE MANUFACTURER'S REPRESENTATIVE GIVES FINAL WRITTEN APPROVAL TO THE CONTRACTOR, STATING THAT THE SURFACES TO BE COATED ARE ACCEPTABLE TO ACHIEVE A FULLY-WARRANTED COATING SYSTEM.

No.	Issue	Drawn	Approved	Date
0	FOR BID	SHA	AB	AUG 2018

MIAMI-DADE COUNTY

Bar is one inch on original size sheet
0 1"

Reuse of Documents
This document and the ideas and designs incorporated herein, as an instrument of professional service, is the property of GHD and shall not be reused in whole or in part for any project without GHD's written authorization.
© 2018 GHD

SEAN H ANDERSON LICENSE No. 84899 STATE OF FLORIDA PROFESSIONAL ENGINEER

GHD
800 Governor's Square Blvd, Suite 410
Miami Lakes FL 33016 USA
T 1 786 334 6392 W www.ghd.com

Drawn	S. ANDERSON	Designer	S. ANDERSON
Drafting Check	J. RIDDLE	Design Check	J. ROSMAN
Project Director	A. BURBANO	Date	AUGUST 2018
This document shall not be used for construction unless signed and sealed for construction.		Scale	NOT TO SCALE

Client: MIAMI-DADE WATER AND SEWER DEPARTMENT
Project: CDWWTP PLANT 1 CLARIFIER BASIN No. 3 STRUCTURAL REHABILITATION
Title: CONCRETE REPAIR DETAILS
Project No. GHD #11152351 - CONSENT DECREE PROJECT 2.07(3) PCTS NO. 13280
Original Size: ANSI D
Sheet No. S008
Sheet 10 of 10