DEPARTMENTAL INPUT
CONTRACT/PROJECT MEASURE ANALYSIS AND RECOMMENDATION

☒ New Contract ☐ OTR ☐ Sole Source ☐ Bid Waiver ☐ Emergency
☐ Re-Bid ☐ Other

Previous Contract/Project No. **RTQ-00662**

LIVING WAGE APPLIES: ☐ YES ☒ NO

Requisition No./Project No.: **0000166223** TERM OF CONTRACT **120 DAYS**

Requisition /Project Title: **CD 3.03 OXYGEN TANK NO. 5 CLEANING**

Description: **NDWWTP OXYGEN TANK NO. 5 CLEANING CONSENT DECREE PROJECT 3.03**

Issuing Department: **WASD** Contact Person: **JEFFREY JONES** Phone: **786-268-5915**

Estimate Cost: **$500,000.00**

GENERAL FEDERAL OTHER

Funding Source: **GENERAL**

ANALYSIS

Commodity Codes: **91070**

Contract/Project History of previous purchases three (3) years
Check here ☐ if this is a new contract/purchase with no previous history.

	EXISTING	2ND YEAR	3RD YEAR
Contractor:			
Small Business Enterprise:			
Contract Value:			

Comments:

Continued on another page (s): ☐ Yes ☐ No

RECOMMENDATIONS

	Set-aside	Sub-contractor goal	Bid preference	Selection factor
SBE			x	

Basis of recommendation:

Signed:

Date sent to SBD:

Date returned to PMS:

Revised April 2005

MIAMI-DADE COUNTY, FLORIDA

BOARD OF COUNTY COMMISSIONERS

CARLOS A. GIMENEZ, MAYOR

ESTEBAN BOVO, Jr., CHAIRPERSON

BARBARA J. JORDAN

JEAN MONESTIME

AUDREY M. EDMONSON

SALLY A. HEYMAN

REBECA SOSA

XAVIER L. SUAREZ

DANIELLA LEVINE CAVA

DENNIS C. MOSS

SEN. JAVIER D. SOUTO

JOE A. MARTINEZ

JOSE “PEPE” DIAZ

CONSENT DECREE PROJECT CD 3.03
OXYGEN TANK NO. 5 CLEANING
NORTH DISTRICT WASTEWATER TREATMEMT PLANT
RPQ# [XXXXXX]
PCTS No. 13187

ER No. S049700

BID SET

JUNE 2018

MIAMI-DADE WATER AND SEWER DEPARTMENT
KEVIN T. LYNSKEY, DIRECTOR

PREPARED BY
CD PMCM

THIS PAGE

INTENTIONALLY

LEFT BLANK

TABLE OF CONTENTS

TABLE OF CONTENTS ..... (1 pages)

TECHNICAL SPECIFICATIONS

01005A	DEFINED TERMS	2
01010A	SUMMARY OF WORK	8
01090A	REFERENCE STANDARDS	2
01100A	SPECIAL PROJECT PROCEDURES	4
01150A	PROJECT SCHEDULES, MEETINGS, AND REPORTS	3
01350A	SITE SECURITY	6
01500A	TEMPORARY FACILITIES	7
01501A	SAFETY REQUIREMENTS AND PROTECTION OF PROPERTY	10
01570A	TEMPORARY ENVIRONMENTAL CONTROLS	2
01660A	SITE ACCESS AND STORAGE	3
01700A	CONTRACT CLOSEOUT	2
01710A	CLEANING	2
03722A	HYDROBLASTING CLEANING	3

ATTACHMENT

ATTACHMENT A GENERAL TERMS AND CONDITIONS (10 pages)
SOLICITATION RTQ-00662 (24 pages)

ATTACHMENT B SITE SCHEMATIC (1 page)

ATTACHMENT C AS-BUILT (11 pages)

END OF TABLE OF CONTENTS

THIS PAGE

INTENTIONALLY

LEFT BLANK

SECTION 01005A

DEFINED TERMS

PART 1 - GENERAL

1.01 SCOPE

When used in this publication the following underlined terms shall have meaning as hereinafter defined:

A. The masculine pronoun shall include the feminine and neuter, and the singular shall include the plural;

B. "And" shall also mean "or" and "or" shall also mean "and", wherever the context or purpose so requires;

C. "Person" shall mean and include any individual, combination of individuals, partnership, society, association, joint stock company, corporation, estate, receiver, trustee, assignee, referee or any other person acting in a fiduciary or representative capacity, whether appointed by a court or otherwise;

D. "County", "Dade County", "Miami-Dade County" or "Metropolitan Dade County (MDC)" shall mean Miami-Dade County, Florida, a political subdivision of the State of Florida, acting by and through the Board of County Commissioners, which is a party hereto and for which this Contract is to be performed;

E. "Department", “Owner”, or “WASD” shall mean the Miami-Dade Water and Sewer Department of Miami-Dade County, Florida;

F. "Director" shall mean the Director of the Miami-Dade Water and Sewer Department;

G. "Engineer" shall mean the Chief, Engineering Division of the Miami-Dade Water and Sewer Department or an authorized representative;

H. "Inspector" shall mean any person designated by the Engineer to examine and inspect materials and work for the purpose of insuring compliance by the Contractor with all requirements of the Plans and Specifications;

J. "Contractor" shall mean the party of the second part to the contract. The person, firm, or corporation, holding a current Certificate of Competency applicable to the type of work to be performed, with whom a contract has been made directly or through accredited representatives, that may have entered into a contract with the County and who is primarily liable for the acceptable performance of the work for which he has contracted and also for the payment of all legal debts pertaining to the work, or Contractor shall mean any person engaged by the Developer to supply labor, materials or equipment for use in the fulfillment of the project.

K. "Subcontractor" shall mean any person engaged by the Contractor to supply labor, materials or equipment for use in the fulfillment of the Project;

L. "Engineer of Record" shall mean the Florida-certified professional engineer engaged by the Developer or the Department to design the proposed Project.

M. "Project" shall mean and include all construction for which the Contractor is responsible under the Contract Documents, or shall mean and include all construction for which the Developer or Engineer of Record is responsible under the agreement with the Department.

N. "Plans" shall mean construction drawings prepared by the Developer or Engineer of Record for the proposed Project.

O. "Standards Details" or "Standards" the Department's latest published standard construction details, copies of which are bound herein.

P. "Equal" or "Approved Equal" shall mean only that material or product which is specifically approved by the Engineer as being an acceptable substitute for a material or product designated in the Specifications or by a trade name or the name of the manufacturer.

Q. "Domestic" when applied to materials, shall mean materials or products produced within the continental limits of the United States.

R. "Water level" or "water table" shall mean the top elevation of the natural ground water table as it exists in the trench at any particular site and time during the installation.

S. "Surveyor" shall mean a professional surveyor registered in the State of Florida to engage in the practice of surveying.

PART 2 - PRODUCTS

(Not Used)

PART 3 - EXECUTION

(Not Used)

END OF SECTION

SECTION 01010A

SUMMARY OF WORK

PART 1 -- GENERAL

1.1 THE SUMMARY

A. WORK INCLUDED: This Section describes the project in general, and provides an overview of the extent of the work to be performed under this Contract. Detailed requirements and extent of work is stated in the applicable Specification sections. Contract Drawings have not been developed nor are included with these contract documents. Only as-built drawings (structural: deck, foundation, sections, and details; mechanical: plans, sections, and details) showing the as-built conditions are provided. The CONTRACTOR shall, except as otherwise specifically stated herein or in any applicable parts of the Contract Documents, provide and pay for all labor, materials, equipment, tools, construction equipment, and other facilities and services necessary for proper execution, and completion of the work under this Contract.

1.2 SPECIFICATIONS

A. The Specifications included in these Contract Documents establish the minimum performance and quality requirements for materials and equipment together with the minimum standards for quality of workmanship and appearance. Generally, there has been no attempt to separate the Specification sections into groups for the work of separate subcontractors, or for work to be performed by the various trades. Should there be any question as to the interpretation of any Specification section or part of Specification section, such question should be directed to the ENGINEER prior to the submittal of a proposal and bid for the work under this Contract.

B. It is the intent of DEPARTMENT to obtain a completely cleaned out tank, which includes removal of all debris, sand, grit, organics, and water from Oxygenation Train No. 5 and power washing of all concrete and metal surfaces including walls, curtains, columns, ceilings, floors, gates, valves, etc., and removal of all wash water for structural inspection by an Engineer. All items of labor, equipment or materials, which may be reasonably assumed as necessary to accomplish this work, shall be provided by the CONTRACTOR, whether it is specifically stated herein or not. The CONTRACTOR shall also furnish and install all sheeting, shoring, bracing and all other labor, material or equipment required to preclude damage to, or loss of functionality of, any existing facility or system and to protect all employees performing the work.

C. No request for additional compensation or Contract time (except for a non-compensable time extension at the sole discretion of the ENGINEER, whose decision shall be final) resulting from encountering utilities or structures not shown, or differing in location or elevation from that shown in the as-built drawings, will be considered. The CONTRACTOR shall explore sufficiently ahead of performing the Work to allow time for any necessary adjustments without delay to the progress of the installation. Costs due to delays occasioned by encountering utilities or structures which could have or should have been discovered by timely exploration ahead of performing the Work, shall rest solely with the CONTRACTOR.

1.3 REASONABLY IMPLIED PARTS OF THE WORK SHALL BE DONE THOUGH ABSENT FROM SPECIFICATIONS

A. Any part of the work which is not mentioned in the Specifications but which is necessary or normally required as a part of such work, or is necessary or required to perform the Work in a legal and safe manner, shall be performed by the CONTRACTOR as incidental work, without extra cost to DEPARTMENT, as if fully described in the Specifications, and the expense thereof shall be included in bid for the Work.

1.4 CONSTRUCTION MILESTONE DATES AND LIQUATED DAMAGES

A. The selected bidder shall be required to complete cleaning of Oxygenation Basin No. 5 at NDWWTP per table below. No onsite work shall be allowed until a site-specific (1) Safety, Health and Environmental (SH&E) Plan, (2) Sequence of Work Plan, and (3) Shoring Plan have been accepted or no exceptions taken.

Milestones	Description	Calendar Days After Notice to Proceed	Liquidated Damages (1)
1	Accepted SH&E Plan, Sequence of Work Plan, and Shoring Plan	45	
2	Substantial Completion for Oxygenation Basin No. 5 Cleaning	105	$1,800/day
3	Final Completion	135	$1800/day

(1) Liquidated damages will be assessed based on every calendar day exceeding the duration for the specific milestone including weekends and holidays.

B. Liquidated Damages

This project is mandated by a Consent Decree which has established construction schedule milestones that are critical for completion of this project. These milestones have either “Consent Decree Liquidated Damages”, “Contract Liquidated Damages” or both associated with them.

Contract Liquidated Damages

Liquidated Damages for the timely completion of this contract shall be set at the values listed in the table above, including weekends and holidays, which sum is a fair and reasonable sum for all indirect costs as may be borne by the County due to the Contractor exceeding the Construction Time of the Contract and represents the actual damages which the County will have sustained per day by failure of the Contractor to complete the work within said specified times, it being agreed that said sum is not a penalty but is the stipulated amount of damage sustained by the County in the event of such default by the Contractor. Failure to complete work on or before the Milestones listed in the table above shall result in Contract Liquidated Damages.

Consent Decree Liquidated Damages

Miami-Dade County has entered into a Consent Decree (United States District Court for

the Southern District of Florida, Case No. 1:12-cv-24400-FAM, herein referred to as Consent Decree) with the United States, Environmental Protection Agency, the State of Florida, and Florida Department of Environmental Protection (FDEP) (collectively "Regulatory Agencies"), to remediate its aging wastewater infrastructure. This project is intended to satisfy the requirements identified in the Consent Decree as CD Projects 3.03. The full text of the Consent Decree is available online at:

`http://www.miamidade.gov/water/library/reports/consent-decree/consent-decree-signed.pdf`

The Consent Decree provides that the Regulatory Agencies may impose stipulated penalties against Miami-Dade County for failure to meet the deadline for Construction Completion and for certain sanitary sewer overflows (SSOs). In the event the Regulatory Agencies impose such penalties against Miami-Dade County and such penalties are a result of the Contractor's lack of performance, failure to meet Construction Completion, or a SSO that occurs during construction, the Contractor shall be liable to the County for such amounts as additional Liquidated Damages ("Consent Decree Liquated Damages"). Please note these Consent Decree Liquidated Damages are in addition to the liquidated damages as specified in the General Terms and Conditions Article 11 and may be assessed separately and/or in combination with Liquidated Damages.

(a) Failure to complete work on or before Construction Completion January 17, 2024 shall result in Consent Decree Liquidated Damages as listed below.

Period of Noncompliance per Violation per Day

One (1) to fourteen (14) days	$1,000
Fifteen (15) to thirty days (30) days	$2,000
Thirty-one (31) to sixty (60) days	$3,000
Sixty-one (61) to one hundred eighty (180) days	$4,000
More than one hundred eighty (180) days	$5,000

(b) Consent Decree Liquidated Damages for each SSO reaching waters of the United States due to a release of wastewater caused by Contractor may be assessed as:

Description	Before 4/09/2019	After 4/09/2019
1 to 10,000 gallons	$1,000	$1,000
10,000 to 250,000 gallons	$2,000	$4,000
250,000 to 1,000,000 gallons	$5,000	$10,000
Greater than 1,000,0000 gallons	$10,000	$20,000

(c) Consent Decree Liquidated Damages for each SSO NOT reaching waters of the United States due to a release caused by Contractor may be assessed as:

Description	Before 4/09/2019	After 4/09/2019

1 to 10,000 gallons	$500	$500
10,000 to 250,000 gallons	$1,000	$2,000
250,000 to 1,000,000 gallons	$2,500	$5,000
Greater than 1,000,0000 gallons	$5,000	$10,000

1.5 WORKING HOURS AND INSPECTION CHARGES

A. Standard Work Hours shall allow for up to a 12-hour work day starting at 7AM and completing by 7PM or as otherwise as approved, Monday thru Saturday. The Contractor shall provide their work schedule on a weekly basis and coordinate daily activities with the Construction Manager. The standard work day shall be up to 12 hours of work with 1 hour for lunch. Modifications to the standard construction schedule shall be coordinated with the Construction Manager at least one week in advance. Optional work beyond the standard 12-hour work day or work on Sundays or Holidays shall be done with the approval of the Construction Manager and with a preapproved overtime compensation of the WASD Inspector charged to the Contractor. Set-up and demobilization work that do not require inspection may not be performed outside of the standard 12-hour work day.

No work, however, shall be done outside of Standard Work Hours, except if such work has been stated below or authorized by the Construction Manager, is necessary for the proper care and protection of the work already performed, or except in case of an emergency, in which event the permission of the Engineer to do such work shall be secured.

For work outside the Standard Working Hours, WASD reserves the right to charge the contractor $90 / hour per inspector required at the job site as specified in Implementing Order 4-110 - SCHEDULE OF RATES, FEES AND CHARGES FOR MIAMI-DADE WATER AND SEWER DEPARTMENT under both Schedule of Water Fees and Charges and Schedule of Wastewater Fees and Charges item #48.

1.6 DESCRIPTION OF WORK AND PAYMENT ITEMS

A. Contractor shall be paid on a monthly basis for the progress completed for each bid item. It will be the responsibility of the Contractor to provide a draft pay application each month and progress report listing the percent completion for each bid item for review by DEPARTMENT or DEPARTMENT'S REPRESENTATIVE. Based on their review, the Contractor will revise documents based on received comments and submit a final pay application and progress report for processing.

B. All work described below must be accomplished under the provisions set forth in contract RTQ-00662. General Terms and Conditions are provided in the Contract Document.

C. The Work consists of furnishing all materials, labor, and equipment necessary for cleaning and removing all, including but not limited to, debris, sand, grit, organics, sludge, and water from Oxygenation Train No. 5 at the North District Wastewater Treatment Plant (NDWWTP), which is owned and operated by the Miami-Dade Water and Sewer Department (Owner).

D. **Bid Item No. 1 Mobilization/Demobilization** - This item can be no more than 10% of the total bid.

Performing preparatory work including setting up temporary facilities and services, mobilization and demobilization of all personnel and equipment necessary to complete the work including, but not limited to, supplies, incidentals to and from the Project Site, safety equipment, first aid supplies, work area ventilation, lighting, scaffolding, ladders, access equipment needed to support personnel and equipment, allow access and egress by personnel during cleaning operations and other items required to initiate construction. Refer to the attached Site Schematic for portable water connections, sanitary sewer disposal, and staging area.

Closeout: All remaining work after Substantial Completion, including removal of equipment and scaffolding, performing final cleanup, and addressing outstanding items and issues as identified by the ENGINEER and/or DEPARTMENT.

E. Bid Item No. 2 Safety and Sequence of Work Plans

Development of draft and final site-specific Safety, Health, and Environmental Plan (SH&E Plan) for execution of the Work and training of personnel in the execution of SH&E Plan procedures. A draft SH&E Plan shall be developed and submitted to the ENGINEER for review and comment within three (3) weeks of receiving an issued Purchase Order. The CONTRACTOR shall provide written responses to each comment including a description of the proposed revisions to the SH&E Plan before submitting the final SH&E Plan. A final SH&E Plan must be submitted within one (1) week from receiving comments and reviewed by the ENGINEER before executing any Work on-site.

The SH&E Plan shall list and describe all equipment, materials, and safety procedures to be used in performing the work. A corporate safety plan detailing all of the comprehensive programs may be submitted as a reference, however the site-specific plan should detail the specific hazards, along with the training, engineering controls, work practices and/or personal protective equipment PPE to eliminate or mitigate the on-site hazards. Major elements of the Contractor Site Specific Safety Plan shall include:

1. A project address and site map showing the work zone;

2. The names and contact information of the contractor, and person(s) responsible for site safety;

3. A hazard analysis, including a description of the known and potential hazards and evaluations of the risks associated with the project and jobsite shall be included. The hazard analysis should include both key physical hazards, such as trenching, confined spaces, etc., and biological and chemical hazard

4. A description of the personal protective equipment to be worn by personnel in the work area and when it will be used;

5. An air monitoring plan if chemical hazards are present. The air monitoring plan shall detail the type of air monitor(s) that will be used and the calibration and testing of the air monitor, the contaminants that will be monitored, and the action levels for each compound.

6. Training requirements: list the specific hazard related training that is required for workers on site and verify employee training;

7. A hospital/emergency room map with written driving directions;

8. Emergency notification procedures in the event of an injury or chemical release, which shall include notification of the WASD Emergency Communication Center at (305) 274- 9272;

9. An acknowledgement page for all personnel who come onto the site verifying that they have been trained and have reviewed the site safety plan.

If there is a change in the activities, methods of construction, or identifications of additional hazards at the site, a revised safety manual and job hazard analysis may be required to be submitted to the DEPARTMENT. Additionally, if any underwater work/diving will be conducted at the site, a comprehensive dive plan must be submitted for review.

The CONTRACTOR shall be responsible for providing training procedures including, but not limited to, entry and exiting procedures, lock-out tag-out procedures to be implemented for possible influx of liquids/gasses into the confined space, atmospheric testing procedures, rescue procedures including the equipment to be used and personnel trained in its use, and procedures used to safely clean the interior of the tank. The CONTRACTOR shall identify the staff that will be used to monitor and manage work performed within Oxygenation Basin No. 5 including a confined space entry attendant who will be responsible for monitoring the conditions of those working within all confined spaces. These individuals shall be required to be on-site when all work is performed. The Selected Bidder and its team shall participate in the safety training program conducted by WASD. The CONTRACTOR must ensure that all personnel are trained in all SH&E Plan and provide documentation verifying training of staff prior to site work. The CONTRACTOR will review and familiarize itself and follow the CONTRACTOR and visitor safety information guide for NDWWTP provided by WASD.

Sequence of Work Plan: Before commencement of any work, the CONTRACTOR will submit a Sequence of Work Plan describing the interrelationship and the interdependency of work activities with one another, and the personnel that will be involved. The Sequence of Work Plan will take into consideration on-site operation and maintenance, site access, available space and other considerations. The Sequence of Work Plan will describe the equipment to be used, cleaning material disposal methods, and cleaning and pressure washing procedures. The CONTRACTOR shall prepare a construction schedule listing major activities with start and end dates. The schedule will take into consideration sequencing of cleaning operations and any interface required by DEPARTMENT Operational staff.

F. Bid Items No. 3 – Shoring Plan

The CONTRACTOR is responsible for planning and executing all procedures necessary to construct, maintain, and remove the temporary shoring system in a safe and controlled manner. All shoring must be designed by a Structural Engineer licensed in the State of Florida.

The CONTRACTOR shall develop a draft and final site-specific Shoring Plan for execution of the Work. A draft Shoring Plan shall be developed and submitted to the ENGINEER for

review and comment within three (3) weeks from receiving an executed purchase order. The CONTRACTOR shall provide written responses to each comment including a description of the proposed revisions to the Shoring Plan before submitting the final Shoring Plan. A final Shoring Plan must be submitted within one (1) week from receiving comments, signed and sealed by a Structural Engineer licensed in the State of Florida for review by the ENGINEER before installing any scaffolding and shoring.

G. Bid Item No. 4 – Tank Cleaning

Provide set up, and removal all labor, supervision, and equipment necessary to perform the work described in this task including installation and removal of all shoring and scaffolding equipment.

A minimum amount of shoring is required to be provided by the CONTRACTOR for the following: (1) support the operating deck near mixer openings to compensate for structural damage observed in the adjacent supporting columns, and (2) around each damaged support column to prevent disintegrated and loosened material from falling during cleaning operations. Any additional shoring needed to protect CONTRACTOR personnel as identified during cleaning operations shall be brought to the attention for review by the DEPARTMENT and compensated separately.

Provide and install all confined space entry equipment including, but not limited to, equipment used to enter and exit the tank, used in the rescue of personnel, testing equipment to monitor atmospheric conditions, and PPE for all staff working on-site and within Oxygenation Train No. 5. All staff entering work area shall have confined space training certification.

Water pressure cleaning and removal of all, including but not limited to, debris, sand, grit, organics, sewage, rags, water, and all other material from Oxygenation Basin No. 5 at the NDWWTP. Power wash of all concrete and metal surfaces including walls, curtains, columns, ceilings, floors, gates, valves, etc., and removal of all wash water in accordance with the SH&E Plan and Sequence of Work Plan approved under Bid Item No. 2.

All waste materials and debris shall be properly disposed per Specification Section 03722 Hydroblasting Cleaning.

H. Bid Item No. 5 Unit Price Option Scaffolding and Shoring (per Week).

At the discretion of the WASD, the CONTRACTOR may be requested to leave in-place shoring and scaffolding installed for cleaning of the Oxygenation Basin No. 5 for use by DEPARTMENT'S design consultant in performing tank inspections. Payment for this item shall be on a weekly basis beginning when the CONTRACTOR 's use of the scaffolding is no longer used until time when the WASD's inspections are complete. Removal of the scaffolding and shoring at the end of the WASD's inspections shall be provided by the CONTRACTOR and paid under Bid Item No. 3

1.7 MINIMUM CONSTRUCTON EXPERIENCE OF THE CONTRACTOR

A. Only pre-qualified vendors included in Request to Qualify Solicitation 00662 (RTQ – 00662) for providing dewatering and/or tank cleaning services may bid on this project.

PART 2 -- TESTING REQUIREMENTS (NOT USED)

PART 3 -- PRODUCTS (NOT USED)

PART 4 -- EXECUTION (NOT USED)

END OF SECTIO

SECTION 01090A

REFERENCE STANDARDS

PART 1 GENERAL

1.1 THE SUMMARY

A. Comply with the requirements of standard with date as specified herein. Standards without dates shall be understood as the Standard current at the time of bid. In case of conflict between the referenced standards, the one having the more stringent requirements shall govern.

B. In case of conflict between the referenced standards and the Project Documents, the Project Documents shall govern.

C. When no reference is made to a code, standard, or specification, the standard specifications of the ASTM, the ANSI, the ASME, the IEEE, or the NEMA shall govern.

1.2 ABBREVIATIONS

AA:	Aluminum Association.
AAMA:	Architectural Aluminum Manufacturer's Association.
AASHTO:	American Association of State Highway & Transportation Officials.
ACI:	American Concrete Institute.
AGA:	American Gas Association.
AGMA:	American Gear Manufacturer’s Association.
AIEE:	American Institute of Electrical Engineers (Now IEEE).
AISC:	American Institute of Steel Construction.
AISI:	American Iron and Steel Institute.
ANSI:	American National Standards Institute.
API:	American Petroleum Institute.
ASCE:	American Society of Civil Engineers.
ASME:	American Society of Mechanical Engineers.
ASTM:	American Society for Testing and Materials.
AWPA:	American Wood Preservers Association.
AWS:	American Welding Society.
AWWA:	American Water Works Association.
DOT or FDOT	Florida Department of Transportation.
CIPRA:	Cast Iron Pipe Research Association.
DIPRA:	Ductile Iron Pipe Research Association.
EPA:	Environmental Protection Agency (U.S.).
FED. SPEC.:	Federal Specification.
FBC:	Florida Building Code.
IEEE:	Institute of Electrical and Electronic Engineers.
NBS:	National Bureau of Standards.
NCPI:	National Clay Pipe Institute.
NEC:	National Electrical Code.
NEMA:	National Electrical Manufacturer's Association.
NESC:	National Electric Safety Code.

NEWWA:	New England Water Works Organization.
NFPA:	National Fire Protection Association.
NLMA:	National Lumber Manufacturers Association.
NSF:	National Sanitation Foundation.
OSHA:	U.S. Department of Labor, Occupational Safety and Health Association.
SAE:	Society of Automotive Engineers.
SHBI:	Steel Heating Boiler Institute.
SSPC:	Steel Structures Painting Council.
ISA:	Instrument Society of America.
TCA:	Tile Council of America.
UL:	Underwriter's Laboratories, Inc.

A. The above list shall not be considered complete, as there are other "Standards" used; however, in most cases complete titles have been given.

B. Wherever "Standards" are indicated herein for reference, the referenced portion shall have the same force and effect as if it were included herein in its entirety, latest revision if date of publication not shown.

C. When used within these specification: ”Owner or Department” shall mean the Miami-Dade Water and Sewer Department; “Director” shall mean the Director of the Miami-Dade Water and Sewer Department; and “Engineer” shall mean the Chief, Engineering Division of the Miami-Dade Water and Sewer Department, or an authorized representative.

PART 2 PRODUCTS (NOT USED)

PART 3 EXECUTION (NOT USED)

END OF SECTION

SECTION 01100A

SPECIAL PROJECT PROCEDURES

PART 1 - GENERAL

1.01 RESPONSIBILITY OF THE CONTRACTOR

A. The Contractor shall have at all times as his agent on the site of the work a competent superintendent capable of reading and thoroughly understanding the Plans and Specifications.

B. The Contractor shall be responsible for the good condition of the work or materials until formal release from his obligations under the terms of this project. The Contractor shall store materials and shall be responsible for and shall maintain partly or wholly finished work during the continuance of the Contract. He shall place sufficient lights and danger signals on or near the work from sunset to sunrise; shall erect suitable railings or other protective devices about unfinished work, manhole or access openings, open trenches, embankments, or other obstructions; shall provide all necessary watchmen on the work by day or by night for the safety of plant personnel and the public, and shall take all necessary precautions for preventing accidents or injuries to persons or property in or about the work.

C. Whenever piping systems or utilities such as water, wastewater, air, chemical, electrical other services must be crossed, deflection of the pipe within recommended limits and cover shall be used to satisfactorily clear the obstruction unless otherwise indicated on the Drawings. Approximate locations of known installations in the vicinity of new work must be verified in the field by the Contractor, who shall uncover them carefully, prior to commencement of the work.

D. The Contractor shall familiarize himself with all codes and regulations of the Federal Government, the State of Florida, the County of Miami-Dade and any municipal corporations applicable to every aspect of the Project. The Contractor shall provide all materials and shall perform all work necessary to fully comply with all provisions and requirements of applicable codes and regulations whether specifically indicated in the Plans and Specifications or not. It is the intent of the Department to obtain a finished project in full compliance with all requirements of any agencies having jurisdiction over any portion of the work involved in the Project. The Inspector will not recommend acceptance of the work until all requirements and provisions of pertinent codes and regulations have been satisfactorily fulfilled.

1.02 CONNECTIONS TO EXISTING PIPING

A. Perform in such a manner that no damage and minimal interruption is caused to existing installation. Any damage caused to existing installations shall be repaired or replaced by the Contractor.

B. Coordinate connection operations with the Department, who shall be notified at least 7 days in advance of any activity which may interfere with the existing utility system.

C. All connections to existing mains of the Miami-Dade Water and Sewer Department shall be made under the direct supervision of Department personnel. Valves separating the main being installed from existing mains shall be operated by Department personnel upon request by the Contractor. Under no circumstances shall any valves or plant equipment be operated by the Contractor's personnel.

D. Any proposed length of pipe, fitting or valve to be installed as an integral part to an active water main, shall be swabbed on the inside with calcium hypochlorite, HTH, Parchorin, or approved equal, mixed in solution with water. The quantity of hypochlorite shall in all cases be subject to the approval of the Department whose representative shall be present at all times while this phase of the work is in progress.

E. The installation shall be made as swiftly as possible after service has been halted in the pipeline and any water in the ditch shall be kept below the level of the length of pipe, fitting or valve. The pipeline shall the be placed in service by the Department personnel.

1.03 WATER USED IN CONSTRUCTION

A. Water used in connection will the furnished by the Department at a charge. This water will be supplied from the most convenient source through the existing piping. However, all water used must be metered through a Department meter. The Contractor will be billed, by the Department based on water usage. Failure of the Contractor to meter the water, or providing others with water, could result in his being fined and/or a citation being issued against him in accordance with the rules and regulations of the Department’s Tampering Section. The Contractor can obtain the meter through proper application and payment of deposit fee at the Department’s New Business Office, 3575 South Lejeune Road, Miami, Florida. The Contractor shall present a Miami-Dade County Fire Department permit or Coral Gables Fire Department Permit during application with the New Business Office. The deposit fee will be refunded to the Contractor upon return of the meter in a sound satisfactory condition. The largest meter available is 2 inches NPS. Effective October 1, 1997, the required deposit for a 2-inch meter is $2,000.00, for current fees contact the Department's New Business Office at (305) 669-7701. Additional fees may be required by other governmental agencies for utilizing existing sources of water.

B. All piping, fittings, valves and equipment, including pumps and power, required for handling the water shall be furnished by the Contractor. Care shall be exercised in the use of the water and provision shall be made to protect the water supply from contamination and indiscriminate use by unauthorized persons. The Contractor shall use only potable water.

C. Under no circumstances shall the Contractor utilize a water source, including existing piping, until such source or piping has been approved for use by the Department.

1.04 MATERIALS AND EQUIPMENT FURNISHED BY THE CONTRACTOR

A. The Contractor shall furnish all materials required to complete the construction of the project and related items, ready for service.

B. All material and equipment furnished by the Contractor for incorporation into the Project shall be new and of recent domestic manufacture, and shall be the products of reliable manufacturers who, unless otherwise specified, have been regularly engaged in the manufacture of such material and equipment for at least five (5) years.

C. All fittings and components shall, wherever possible be standard stock articles of well-known domestic manufacturers. Where the Plans and Specifications designate the products of a particular manufacturer, the product specified has been found suitable for the intended use, but unless otherwise provided, articles or products of similar characteristics may be offered for the approval of the Department. Complete descriptive data shall be furnished in quintuplicate regard- in all materials furnished by the Contractor, consisting of dimension drawings, catalog references and other information necessary to clearly identify each article. When substitutions are permitted, the Contractor shall make all necessary changes in adjacent or connected structures and equipment at his expense.

D. Unless otherwise specified or noted on the Plans, all steel bolts, nuts, washers and other miscellaneous ferrous metal items (except cast iron or stainless steel) furnished by the Contractor shall be hot-dip galvanized in accord with ASTM A123, Zinc (Hot-Dip Galvanized) Coatings for Iron and Steel Products, or ASTM A153, Zinc Coating (Hot-Dip) on iron and Steel Hardware. Where the word galvanized or its abbreviation is used in the Plans or in the Specifications, it shall mean hot-dip galvanized. Fabricated items shall be hot-dip galvanized after fabrication. Internal threads shall be tapped or recapped after galvanizing.

E. All valves, piping, structural steel and miscellaneous materials and equipment shall be stored on blocks or racks. As far as possible, no materials or equipment shall be stored so that it is in direct contact with the ground. All metals shall be thoroughly cleaned before being placed in the work.

F. Electrical equipment and materials, pumps, blowers, and motors shall be stored out of the weather and off the ground, and protected from dust, dirt and moisture.

G. To insure satisfactory and successful final painting of materials and equipment to be furnished, it is essential that the paints applied in the shop and in the field be mutually compatible. To this end, the Contractor shall require that the shop paint applied to the materials and equipment be compatible with the paint proposed to be used in the field, or shall determine what shop paints have been used and select field paints compatible therewith.

H. The Contractor shall not reuse any of the material removed from existing pipeline systems.

I. The Contractor shall supply certification that all materials supplied that will come into contact with drinking water conform with American National Standards Institute (ANSI)/NSF International (NSF) Standard 61.

1.06 MANUFACTURER'S EXPERIENCE RECORD

A. When a manufacturer’s experience record is required by these specifications, the following may be provided in lieu of the specified record:

B. Manufacturers and/or equipment which does not meet the specified experience period will be considered if the manufacturer or supplier provides a bond or cash deposit valid for five (5) years less his years of experience, which will guarantee replacement of the equipment or process in the event of failure or unsatisfactory performance or service.

PART 2 - PRODUCTS (Not used)

PART 3 - EXECUTION (Not used)

END OF SECTION

SECTION 01150A

PROJECT SCHEDULES, MEETINGS AND REPORTS

PART 1 GENERAL

1.1 SUMMARY

A. The CONTRACTOR shall schedule the Work in accordance with the requirements set forth in the RPQ. The CONTRACTOR shall have discretion in scheduling the Work. The Construction Manager, in his/her sole discretion, may require that a detailed schedule be submitted for review and acceptance. **Such schedule shall be submitted to the Construction Manager no later than ten (10) calendar days after the issuance of the Notice of Award**. The County reserves the right to require such information from the Contractor as may be necessary to determine the accuracy of the progress schedule. Where the ENGINEER requires such schedules the CONTRACTOR shall create the schedule utilizing **Microsoft Project or compatible software**. The Construction Manager shall be furnished with copies of the schedules as often as deemed necessary by the Construction Manager in both paper and disk formats. The Construction Manager's basis for not accepting any schedule shall be limited to a determination that the Work sequence lacks logic, is unreasonable, is incomplete or is inconsistent with any other contractual requirements, such as a phasing plan or time for completion.

B. This schedule shall be updated prior to the CONTRACTOR submitting his request for payment, showing actual progress versus scheduled. The Construction Manager and the CONTRACTOR will review this update to analyze the project progress and allocate responsibility if the project is behind schedule. Should the CONTRACTOR fail to update and submit the schedule, as required, he/she shall not be entitled to any delay claims for that period and the request for payment may be delayed pending satisfaction of this requirement.

C. With respect to all submissions by the CONTRACTOR under this paragraph, no review, acceptance or approval by the Construction Manager shall release or relieve the CONTRACTOR from its obligation to fully and properly complete the Project, or any other duty, responsibility or liability imposed on it under the Contract, including, but not limited to the obligation to complete the Work within the time set forth in the applicable RPQ.

D. Receipt by the Construction Manager of an updated or revised schedule shall not be construed to mean that the Construction Manager agrees that the progress of the Work is as shown or indicated therein or that the updated or revised schedule is acceptable to the Construction Manager.

E. All references in this section to the CONTRACTOR shall be deemed to include suppliers, and permitted SUBCONTRACTORS, whether or not in privates of contract with the CONTRACTOR for the purpose of this section.

1.2 SCHEDULE DELAYS AND TIME EXTENSIONS

A. The County reserves the right to rescind or shorten any extension previously granted if subsequently, the Construction Manager determines that any information provided by the

CONTRACTOR in support of a request for an extension of time was erroneous; provided however, that such information or facts, if known, would have resulted in a denial of the request for an Excusable Delay. Notwithstanding the above, the Construction Manager will not rescind or shorten any extension previously granted if the CONTRACTOR acted in reliance upon the granting of such extension and such extension was based on information which, although later found to have been erroneous, was submitted in good faith by the CONTRACTOR.

B. The request for an Excusable Delay shall be made within ten (10) calendar days after the time when the CONTRACTOR knows or should have known of any cause for which it may claim an extension of time and shall provide any actual or potential basis for an extension of time, identifying such causes and describing, as fully as practicable at that time, the nature and expected duration of the delay and its effect on the completion of that part of the Work identified in the request, utilizing **Attachment 29**. The Construction Manager may require the CONTRACTOR to furnish such additional information or documentation, as the Construction Manager shall reasonably deem necessary or helpful in considering the requested extension. Excusable delays may include:

1. The cause of the delay arises after issuance of the NTP and could not have been anticipated by the CONTRACTOR by reasonable investigation before proceeding with the Work;

2. The CONTRACTOR demonstrates that the completion of the Work will be actually and necessarily delayed;

3. The effect of such cause cannot be avoided or mitigated by the exercise of all reasonable precautions, efforts and measures whether before or after the occurrence of the cause of delay.

Note: A delay meeting all the conditions of the above, shall be deemed an Excusable Delay.

C. The CONTRACTOR shall not be entitled to an extension of time unless the CONTRACTOR affirmatively demonstrates that it is entitled to such extension.

D. The Construction Manager shall endeavor to review and respond to the CONTRACTOR'S request for Excusable Delays in a reasonable period of time; however, the CONTRACTOR shall be obligated to continue to perform the Work required regardless of whether the Construction Manager has issued a decision or whether the CONTRACTOR agrees or disagrees with that decision.

E. With regard to an injunction, strike or interference of public origin which may delay the project, the CONTRACTOR shall promptly give the Construction Manager a copy of the injunction or other orders and copies of the papers upon which the same shall have been granted. The County shall be afforded the right to intervene and become a party to any suit or proceeding in which any such injunction shall be obtained and move to dissolve the same or otherwise, as the County may deem proper.

1. If the CONTRACTOR is delayed at any time during the progress of the Work beyond the Completion Date set forth in the RPQ and/or Notice of Award by the neglect or failure of the County or by a Force Majeure, then the Completion Date set forth in the RPQ and/or Notice of Award shall be extended by the County subject to the following conditions:

2. The permitting of the CONTRACTOR to proceed with the Work subsequent to the date specified in the applicable RPQ (as such date may have been extended under the Contract), the making of any payment to the CONTRACTOR, the issuance of any Change Order, shall not waiver the County's rights under the Contract, including but not limited to the assessment of liquidated damages or declaring CONTRACTOR in default.

1.3 CONSTRUCTION MEETINGS

A. PRE-CONSTRUCTION MEETING

1. The Construction Manager shall require the CONTRACTOR and the CONTRACTOR'S subcontractor(s) to attend a meeting prior to the commencement of the Project to review the scope of work, the method of performance, and all other issues related to the site.

2. The Construction Manager will record significant issues discussed at the meeting and record agreements and disagreements, along with the final plan of action, and distribute a record of the meeting to all parties in attendance.

B. PROGRESS MEETINGS

1. Progress meetings will be held by the Construction Manager every other week following the Pre-Construction Meeting. Present at these meetings shall be the CONTRACTOR, the Construction Manager, the DEPARTMENT'S Representative, if applicable, and invitees associated with the Project, as identified by the Construction Manager.

2. The CONTRACTOR shall arrange for the participation of its subcontractors and/or vendors when the Construction Manager requires their presence.

3. The Construction Manager shall maintain minutes of the meeting and distribute copies of the minutes to all parties in attendance.

END OF SECTION

THIS PAGE

INTENTIONALLY

LEFT BLANK

SECTION 01350A - SITE SECURITY (PLANT)
(Rev 01-22-2018)

PART 1 -- GENERAL

1.1 THE SUMMARY

A. Access to this Project site is restricted. After award and prior to commencement of work, the CONTRACTOR shall meet with the Chief Plant Operator and Department's Security Management to submit required information and review security parameters related to the Project. Subcontractors are also required to comply with all security requirements and it shall be the responsibility of the Prime CONTRACTOR to ensure a subcontractor is in compliance with all requirements.

B. All construction staff, visitors and material delivery vehicles will utilize this entrance and exit point throughout the entire duration of the Project, unless so approved and authorized otherwise by Plant Security. All vehicles are subject to search prior to entrance to and exit from the Plant. All vehicles entering into or leaving from a Department facility must stop at the designated entrance and exit points (gates) when entering to and exiting the site. All persons entering the Plant site must exit from the same point (gate) that they entered.

C. All contractors, subcontractors, visitors, delivery personnel and staff shall comply with all Applicable Law and Miami-Dade Water and Sewer Department (Department) requirements with respect to safety and security, in particular to the requirements for access to sites and facilities. The CONTRACTOR is responsible for enforcing the prohibition of all items such as weapons, illegal drugs, alcohol, and any other illegal contraband, and the reporting of security breaches to Department Security Staff and Management.

D. All contractors, subcontractors and their staffs, visitors, County Building Inspectors and all delivery personnel, must be aware that access to a Department site is restricted to only those with assigned identification badges or day passes. All contractors, subcontractors, and staff, visitors, building inspectors, and delivery personnel shall be restricted to the area of the plant where their work or delivery is taking place. Work site restrictions shall be coordinated with the Chief Plant Operator and Department Security Management prior to construction and strictly followed throughout the entire duration of the Contract.

E. Should any access be required to a location other than the primary access to the construction site, the CONTRACTOR shall be required to provide personnel, suitable to Department Security Management, to ensure that only predetermined authorized personnel are allowed access.

F. Access to chemical areas, control areas, electrical generation areas/switching areas and fuel areas will only be allowed as absolutely necessary and unescorted access to these areas will not be allowed under any circumstances.

G. Anyone requesting to access the Department site outside of regular work hours or anyone without a Department issued identification badge, including delivery personnel and building inspectors, will be treated as a visitor.

1.2 IDENTIFICATION BADGES

A. Department Security will be responsible for providing identification badges and color coded day passes for all individuals entering the facility. Each employee accessing the facility more than five days in any ninety-day period will require an assigned identity badge. This badge will require a background check and be issued at a cost of $60.00 each to the CONTRACTOR. Procedures for obtaining the badge are provided at http://www.miamidade.gov/water/facility-security-procedures.asp for Non-Department Employees. Color coded day passes will be issued at the plant entrance gates for visitors, inspectors and delivery personnel. There will be no cost to the CONTRACTOR for color coded day passes. All contractors, subcontractors and their staff shall be required to obtain a Miami-Dade Water and Sewer Department identification badge or color coded day pass in accordance with Department Security Requirements. Everyone requesting access to the facility for more than five days in any ninety-day period will be required to submit to Department Security a 'Non-Employee ID Card Application', the form can be downloaded from http://www.miamidade.gov/water/facility-security-procedures.asp.

1. Identification Badges will be issued for those individuals who will require on-going access (more than 5 days in any 90-day period) to the Plant.
2. A color coded Day Pass will be provided for those individuals who only require short term access (one to two days a week to the Plant site and to visitors and delivery personnel.

B. All individuals requesting a Department identification badge or color coded day pass must present two (2) forms of identification, one of which with picture. All persons driving a vehicle within the Plant site must present a valid driver's license. Expired identification documentation or driver's license will not be considered as valid. All individuals requesting a WASD identification badges are subject to providing finger prints in accordance with Implementing Order 7-41.

http://www.miamidade.gov/aopdfdoc/aopdf/pdffiles/IO7-41.pdf

Finger printing is by appointment, requires additional documentation to be completed and provided, and may be performed at a different location than where identification badges are issued.

C. The Department reserves the right to require the use of assigned access identification badges and/or color coded day passes for anyone requiring access to the Plant. Issued identification badges or day passes must be worn and displayed on an outermost garment or hard hat at all times while at a Department site. The CONTRACTOR will be charged on a per person basis for the issuance of Department identification badges and background investigations for access requirements into the facility. The fee for the background investigation is $60.00 per person. Payment for a security background investigation must be in the form of the Prime CONTRACTOR's company check made payable to Miami-Dade Water and Sewer Department. Cash or credit card payment will not be accepted.

D. All Department issued color coded day passes must be turned in to security at the

end of each workday when the bearer exits the Plant. In the case of delivery personnel and visitors, as the visitor exits the plant site and when the delivery person is exiting the plant site after the last delivery of the day. Day passes are only valid for the day they are issued.

E. Department issued identification badges and color coded day passes are the property of WASD and must be safeguarded by the Prime CONTRACTOR. All identification badges must be returned to Department Security when they are no longer needed i.e. the employee that the badge was issued for will not be returning to the plant site, or at the completion of the Contract. In the event of a lost or stolen, unreadable or defaced Department identification badge, the CONTRACTOR or their staff must immediately notify Department Security, indicating the details of the loss and request a replacement badge. The fee for obtaining a replacement badge is $15.00. Payment must be made in the form of the CONTRACTOR's Company check, made payable to Miami-Dade Water and Sewer Department. Cash or credit card payments will not be accepted. Badges that cannot be read by the security badge electronic reading device at the Plant entry gates must be replaced or entry to the plant will be denied.

F. All the CONTRACTOR personnel accessing the facility for more than 5 days in any 90-day period must have a background check and all background checks must be completed prior to issuance of Notice to Proceed. The CONTRACTOR shall coordinate with Department Construction Management to accomplish in a timely manner and not delay the work. The CONTRACTOR's cost for Security to complete a background check is $60.00 for each background investigation (See Paragraph D above). CONTRACTOR will not be given Notice to Proceed until all workers have been processed and approved by the Department.

G. CONTRACTORs and subcontractors are required to comply with the Department mandatory Safety Training Program. All Contractors, Subcontractors employees and onsite staff and any other persons that are to perform labor or services on the Plant site, are required to receive the training prior to being provided with an identification badge or day pass. Department Safety will provide the safety training/information.

H. CONTRACTOR shall contact Donna Fries, Department's Safety Supervisor, at (786) 268-5620 or FRIESD@miamidade.gov, to arrange for mandatory (PSM) Project Safety Management training. Note that this training must be completed prior to mobilization. The CONTRACTOR shall also be responsible for the training of all subcontractors, sub-subcontractors and personnel working on this project on site.

1.3 VISITORS

A. The CONTRACTOR shall provide Department Security with a list of scheduled visitors each day. This list must be received by Security prior to 3:00 PM on the previous day before the visitor is to access to the plant. This list must include the date and time that it was provided to security, bear the CONTRACTOR's Company name and be signed by the CONTRACTORs Project Manager or his designated representative. In the event that someone should appear at the entry gates that is not on the CONTRACTOR's pre-submitted list, the gate security guard will call the Contractors field office advising them who is requesting entry. The

CONTRACTOR's Project Manager or his designated representative will have to go to the gate, identify the person requesting entry and verbally request a color coded day pass for the individual or individuals. All visitors must provide an acceptable photo identification documentation and be registered with security prior to entry, or provided a day pass, and be announced to the CONTRACTOR requiring their presence. All visitors requesting entry to the Plant site must surrender their driver's license or photo identification card to Security at the gate in order to obtain a Day pass. The license or photo identification card will be returned when the visitor exits the plant.

B. Anyone requesting to access the project site outside of regular work hours or anyone without a Department-issued identification badge will be treated as a visitor.

1.4 PARKING/VEHICULAR SPEED

A. Department will provide a limited number of designated on-site parking spaces for the CONTRACTOR's and subcontractor's employees and administrative staff. All contractors, subcontractors and visitors must abide by posted parking signs and refrain from parking in non-designated or specifically assigned parking areas. Department Security will monitor and enforce parking regulations within the Plant. Vehicles parked in a non-designated or restricted parking areas will be removed by Security at the vehicle owners expense and could barred from future entry to the plant. Parking spaces designated as "Visitor" are reserved for visitors only. Unauthorized vehicles found in visitor designated parking spaces will be treated the same as vehicles found in non-designated parking areas.

B. In the event the designated on-site parking reaches the full capacity level, Department Security will post "Lot Full" signs at the plant entrance, directing all incoming arrivals to a secondary off-site parking lot.

C. Department Security will be responsible to open and close the secondary off-site parking lot each day. No overnight parking is allowed. All parking lot gates will be closed and locked by Security at the end of each work day. Vehicles left over night in the secondary offsite parking areas, will be towed at the vehicle owner's expense and could be prohibited from future parking.

D. Parking adjacent to any building structures, fence lines (interior or exterior), or any other non-designated parking areas will not be permitted.

E. Overnight parking of personal vehicles or delivery vehicles will not be allowed within the Plant site or Department off-site parking lots, except as specifically approved by Plant Security. Plant and parking lot gates will be closed and locked at the end of each work day by Security. All vehicles entering the Department Plant site <u>or its proximity</u> will travel in a safe and slow manner. The max speed allowed is 10 mph within the Plant site or Department off-site parking lots. Violators could be denied driving privileges within the plant site or Department off-site parking lots and could be excluded from entry to the plant site.

1.5 DELIVERIES

A. The CONTRACTOR shall be required to provide personnel, suitable to Department

Security, to verify all material deliveries at the entrance to the Plant property.

B. All deliveries will be made through the designated Construction Entrance, when specifically approved by Plant Security, between the designated hours of construction operations. Deliveries will not be accepted prior to or after the designated hours, except as approved by Plant Security.

C. All CONTRACTOR and subcontractor materials delivered and/or stored on site shall be restricted to locations designated by the Construction Manager or Plant Superintendent.

1.6 Department SECURITY

A. Department Security will maintain an operational security monitoring and control center within the project site. Security will be responsible for access control, badge or day pass issuance, monitoring of security areas, vehicular traffic and parking, emergency response and notification in the event of emergencies and the safeguarding of County assets. Department Security management and guard staff will be on site 24/7 at designated posts in order to provide the required security levels and assist with the operational controls. The CONTRACTOR shall contact the Security Section of the Miami-Dade Water and Sewer Department at (786) 552-8590 for further information related to security.

B. A primary emergency contact number will be provided and prominently posted at the start of the project. Contractors and subcontractors shall report any emergencies or injuries immediately directly to Department Security who will initiate the notification process with the reporter via conference call to 911. Direct dialing of 911 should not be done by any individual other than Department Security, in order to maintain proper incident management and control at the site.

1.7 GENERAL SECURITY REQUIREMENTS

A. In the event that an individual worker or subcontracting firm cannot pass the required security check for work in a restricted area of the plant, it shall be the CONTRACTOR's sole responsibility to replace said worker or the subcontracting firm. Such replacement shall be in full conformance with all County requirements, particularly those concerning small business enterprises, and satisfactory to the Construction Manager and all other County agencies having jurisdiction. The CONTRACTOR is advised that all workers or subcontractors carrying out construction operations where the work requires access to: a number of different plant areas; chemical areas; control areas; electrical generation and/or switching areas; and fuel areas have a high probability that a special security clearance will be required.

B. The CONTRACTOR shall include in the prices bid, all cost to comply with the security and safety requirements and regulations, as indicated here, no additional compensation or Contract time will be allowed the CONTRACTOR because of the requirements of this Section.

C. The Department reserves the right to add reasonable additional security requirements as needed and the Security Chief's decision to do so shall be final. No additional Contract time or compensation will be allowed in such instance.

D. The attention of the Contractor is hereby directed to the Florida Statutes, Section 119.071, that all Miami-Dade County plans and records, including drawings, permit records, microfilm and other depictions of any type of Miami-Dade County facilities is exempt from the public records law. It is the responsibility of a prospective contractor / Contractor, to maintain security controls of any Contract Documents including the Plans, even when providing copies to prospective sub-contractors and vendors. The prospective contractor shall maintain a record of all Contract Documents to be used in the fulfillment of the bidding of or the performance of the Contract. The Contractor shall return the same to the County representative upon completion.

E. All contractors, subcontractors and staff will safeguard against any unauthorized distribution or posting of any and all Department provided infrastructure information to any individual or organization not authorized in advance by Department management and security.

F. Department Security will notify the CONTRACTOR in writing if his/her personnel violate the security requirements. In the case of repeated violations, the Department may stop the CONTRACTOR's work until such time as the CONTRACTOR can show that he/she has taken steps, satisfactory to the Security Chief, to correct the problem.

G. The CONTRACTOR is also advised that during times of increased security levels or drills for such situations, Department Security or law enforcement agencies having jurisdiction over the Plant may impose a "lockdown" condition which, while in effect will restrict entry and/or exit of personnel and equipment to or from the Plant. If in the event such incident should occur, the CONTRACTOR, if so desired, can request a non-compensable time extension. This request must be received by the Construction Manager within five (5) working days after normal working conditions have been restored. The Construction Manager's decision as to the amount of time lost due to the incident and the impact of the incident on the work, if any, shall be final.

H. The use of camera photography, video or any other type of recording device is prohibited at all times at Department sites. Any request to photograph, video record or any other type or mode of recording on site shall be made in advance to Department Management, through Department Security who will inform Department Security of the authorization. Violators recorded media and/or recording devices will be confiscated by Security and they will be immediately escorted from the Plant site with future access denied and could face criminal prosecution.

I. The CONTRACTOR is responsible at all times, throughout the entire contract, for security of the storage and lay-down areas, and for securing and protecting all of CONTRACTOR’s plant, materials, equipment, and tools, including Department-furnished equipment and materials and those belonging to subcontractors.

PART 2 -- PRODUCTS (NOT USED)

PART 3 -- EXECUTION (NOT USED)

- END OF SECTION -

SECTION 01500A

TEMPORARY FACILITIES

PART 1 -- GENERAL

1.1 DESCRIPTION OF WORK

A. Provide temporary facilities required, which may include, but are not necessarily limited to, the following:

1. Temporary water service.

2. Temporary sanitary service.

3. Temporary electrical service.

B. For additional requirements on Temporary Facilities refer to Section 01 11 00 - SPECIAL PROJECT PROCEDURES.

C. Code Compliance: Comply with the following applicable codes:

1. National Electrical Code.

2. National Electrical Safety Code.

3. National Fire Protection Association.

4. Federal, state and local codes and utility company regulations

D. Requirements of Regulatory Agencies:

1. Obtain and pay for permits as required by governing authorities.

2. Comply with federal, state and local codes and regulations

1.2 TEMPORARY WATER

A. Furnish and install temporary water piping, fittings, valves and equipment for water service throughout the construction site from the sources identified by the Construction Manager and maintain an adequate volume of water for all purposes.

B. The DEPARTMENT will furnish water, at a charge, for all construction activities, unless otherwise specifically made an exception in the Project Specifications or specifically made an exception by the Construction Manager in writing. Water will be furnished from adjacent DEPARTMENT-owned water mains or the most convenient water source. In instances where no DEPARTMENT-owned source of water is available, the CONTRACTOR shall make his own arrangements with the municipality or other controlling authority and include the cost of all water required during construction in his overall construction cost. No reimbursement will be made.

C. Potable water shall be separately metered and protected with approved back flow devices. All water used must be metered through an DEPARTMENT meter.

1. The CONTRACTOR will be billed by the DEPARTMENT based on water usage recorded by the floating meter. Failure of the CONTRACTOR to meter the water could result in his being fined and/or a citation being issued against him in accordance with the rules and regulations of the DEPARTMENT's Tampering Section. The CONTRACTOR can obtain the meter through proper application and payment of deposit fee at the DEPARTMENT's New Customer Division, 3575 South Le Jeune Road, Miami, Florida. The CONTRACTOR shall present a City of Miami Fire DEPARTMENT Permit during application with New Business Office.

2. The deposit fee will be refunded to the CONTRACTOR upon return of the meter in a sound satisfactory condition. The largest meter available is 2-inches NPS. Effective October 1, 2007, the required deposit for a 2-inch meter is $2,500.00 plus $125.00 service charge. For current fees contact the DEPARTMENT's New Customer Division at (786) 268-5200. Additional fees may be required by other governmental agencies for utilizing existing sources of water.

D. All piping, fittings, valves and equipment, including pumps and power, required for handling the water shall be furnished by the CONTRACTOR. Care shall be exercised in the use of the water and provision shall be made to protect the water supply for contamination and indiscriminate use by unauthorized persons. The CONTRACTOR shall use only potable water unless otherwise specifically called out elsewhere herein and then only in the case of sewage force mains reclaim water mains or raw water mains.

E. Under no circumstance shall the CONTRACTOR utilize a water source, including existing piping, until such source or piping has been approved for use by the Construction Manager.

F. Costs of Installation and Operation: Pay costs for installation and operation of potable water supply system used by all trades. Pay costs of maintenance and eventual removal of temporary pipe and equipment for all water services

G. Maintain strict supervision of use of temporary water services:

1. Enforce conformance with applicable codes and standards.

2. Enforce sanitary practices.

3. Prevent abuse of services.

4. Prevent wasteful use of water.

H. Potable water for construction personnel:

1. Portable containers to dispense drinking water.

I. Facility Locations:

1. Within the project site.

2. Drinking Water: Convenient to work stations

1.3 TEMPORARY ELECTRICITY

A. The DEPARTMENT will not furnish electric power for this Project. All electrical driven equipment, including dewatering pumps and electrical welders, shall be served by the temporary electrical service to be provided by the CONTRACTOR.

B. The CONTRACTOR shall supply extension cords, ground fault circuit interrupters, and safety equipment necessary to protect his workmen and plant personnel.

C. The CONTRACTOR shall obtain a power source for temporary electricity from electrical generators or other approved means. Furnish, install and maintain temporary electric power service for construction needs throughout construction site as necessary.

1. Power centers for miscellaneous tools and equipment used in construction work.

a. Locate so that power is available at any desired point with no more than 100 feet extension.

b. Provide weatherproof distribution box with minimum of four 20 amp 120 volt ground outlets.

c. Provide circuit breaker protection for each outlet.

d. Provide equipment grounding continuity for entire system.

e. Users shall provide grounded, UL approved extension cords from power center to point of operations.

2. Power for construction equipment.

3. Power for testing and checking equipment.

4. Power for welding units and for other equipment having special power requirements.

D. Capacity:

1. Adequate electrical service distribution for construction use by all trades and Field Offices during construction period.

2. Notify FPL if unusually heavy loads, such as welding, pumps, and other special power requirements, will be connected.

a. Provide special circuits for heavy load requirements.

b. Do not overload any circuit.

E. Maintain strict supervision of use of temporary services.

1. Enforce conformance with applicable standards.

2. Enforce safe practices.

3. Prevent abuse of services.

1.4 TEMPORARY SANITARY FACILITIES

A. Furnish, install and maintain temporary sanitary facilities for use throughout construction period.

1. Enclosed toilet facilities for construction personnel.

2. General employee washing facilities.

B. Toilet Facilities: Fixed or portable chemical toilets shall be provided wherever needed for the use of CONTRACTOR's employees. Toilets at construction sites shall conform to the requirements of Subpart D, Section 1926.51 of the OSHA Standards for Construction.

C. Minimum number of fixtures:

1. Toilets and Urinals:

a. Provide a minimum of 1 toilet and 1 urinal per 10 workers or as required by Code.

2. Washing Facilities: Adequate for number of employees, for type of work requiring washing facilities, and as required by Code.

D. Maintain strict supervision of use of facilities:

1. Enforce conformance with applicable standards.

2. Maintain service and clean facilities.

3. Enforce proper use of sanitary facilities.

E. Cost of Installation and Operation:

1. Pay costs of temporary sanitary facilities, including costs of installation, maintenance and removal.

2. Costs of Water: As specified in Temporary Water.

3. Pay service charges for use of portable units.

F. Facility Locations:

1. Within the project site.

2. Toilet and washing facilities:

a. Secluded from public observation.

b. Convenient for use of personnel in relation to work stations.

3. Obtain acceptance of Construction Manager for all locations.

G. Enclosure for Toilet Facilities:

1. Weatherproof, sight proof, sturdy temporary enclosures.

2. Insect proof screening, adequate natural ventilation.

H. Sanitary and Other Organic Wastes: The CONTRACTOR shall establish a regular daily collection of sanitary and organic wastes. Wastes and refuse from sanitary facilities provided by the CONTRACTOR or organic material wastes from any other source related to the CONTRACTOR's operations shall be disposed of away from the Site in accordance with laws and regulations pertaining thereto.

I. Sewer Connection: The CONTRACTOR shall coordinate with the Utilities DEPARTMENT for obtaining sewer connection and shall pay permit and sewer usage charges. The sewer capacity charges will be paid by the DEPARTMENT.

PART 2 -- PRODUCTS

2.1 MATERIALS

A. General: Materials may be new or used, but must be adequate for purpose required, must be sanitary and must not violate requirements of applicable codes. Materials in contact with potable water must be AWWA/NSF 61 listed.

2.2 ELECTRICITY

A. Provide required facilities, including transformers, conductors, poles, conduits, raceways, breakers, fuses and switches.

B. Provide appropriate enclosures for environment in which used, in compliance with NEMA standards.

2.3 DRINKING WATER FACILITIES

A. Portable Containers

1. Tightly closed and equipped with dispensing tap.

2. Clearly label contents.

3. Do not use for other purposes.

4. Provide single service disposable cups, with sanitary container for unused cups, and receptacles for used cups.

2.4 SANITARY FACILITIES

A. Toilet Facilities:

1. Portable toilets; either:

a. Chemical toilets.

b. Reticulating toilets.

c. Combustion toilets.

2. Toilet Tissue: Provide at each toilet, on suitable dispenser.

PART 3 -- EXECUTION

3.1 GENERAL

A. Obtain Construction Manager's approval of planned installations.

B. Install work in a neat and orderly manner.

C. Make structurally sound throughout.

D. Maintain to provide continuous service.

E. Modify and extend service as work progress requires.

3.2 TEMPORARY WATER

A. Locate piping and outlets.

1. Provide service convenient to work stations.

B. Avoid interference with:

1. Traffic and work areas.

2. Materials handling equipment.

3. Storage areas.

C. Do not run piping on floor or on ground.

D. When necessary to maintain pressure, provide temporary pumps, tanks and compressors.

3.3 TEMPORARY ELECTRICITY

A. Service and distribution may be overhead or underground.

B. Locate to avoid interference with:

1. Traffic and work areas.

2. Cranes.

3. Material handling equipment.

4. Storage areas.

C. Do not run branch circuits on floor or on ground.

D. Wire all safety devices required for operation of equipment.

E. Check operation of safety devices.

3.4 TEMPORARY SANITARY FACILITIES

A. Portable Toilets:

1. Erect securely and anchor to prevent dislocation.

2. Service as often as necessary to prevent accumulation of wastes and creation of unsanitary conditions.

B. Washing Facilities: Provide faucet

3.5 REMOVAL

A. Completely remove temporary materials and equipment upon completion of construction.

B. Clean and repair damage caused by installation and restore to specified or original condition.

- END OF SECTION –

THIS PAGE

INTENTIONALLY

LEFT BLANK

SECTION 01501A

SAFETY REQUIREMENTS AND PROTECTION OF PROPERTY

PART 1 – GENERAL

1.01 CONTRACTOR'S RESPONSIBILITY FOR SAFETY

Conduct whatever work is necessary for safety and be solely and completely responsible for conditions of the job site, including safety of all persons (including employees) and property during the construction of the project. This requirement shall apply continuously and not be limited to normal working hours.

1.02 HEALTH SAFETY HEALTH AND ENVIRONMENTAL PLAN

A. Contractors shall only proceed with work when they have received the “notice to proceed (NTP)” by the WASD Engineer or their designee. Following issue of the NTP, Contractors Health and Safety Health and Environmental Plan (SH&E) shall be submitted at least 14 calendar days prior to intended start of work date. The SH&E Plan shall be reviewed by the WASD Safety Unit or their designee and returned with “No further Comments”. Upon return of SH&E Plan with “No further Comments”, the Contractor may proceed with work provided all necessary permits have been acquired.

B. The Contractor must comply with WASD safety rules and contractual obligations, all related and applicable safety regulations and their own SH&E Plan.

C. The Contractors SH&E Plan shall reference/include the following as the minimum safety requirements. All safety requirement, which is not mentioned in the following but described in other parts of the Specifications or Drawings, shall also be included in the SH&E Plan.

1. PPE

   All personnel visiting or working at site shall wear Mandatory Personal Protective Equipment (PPE): hard hat, high visibility vest or shirt, safety shoes or boots and safety glasses. Additional PPE may be required dependent on the job hazard analysis.

2. Scaffolding

   All scaffolding shall be constructed and inspected by competent and certified persons as per OHSA Regulation 29 CFR 1926 Subpart CC. Incomplete scaffolds shall have a OSHA approved red tag indicating “do not use incomplete.”

3. Cranes

   The Contractor shall submit a crane lifting plan to the WASD Safety Unit or their designee for review when the load exceeds 75% of the rated capacity of the crane or derrick or requires the use of more than one crane or derrick. All lifting equipment and cranes shall be currently inspected and certified fit for use. Crane operators and riggers shall be trained and certified as per OSHA Regulation 29 CFR 1926 Subpart CC. Additionally Contractors shall comply with Appendix B Crane Ordinance (Chapter 8E-Cranes and Hoisting Equipment of the code of Miami Dade County).

4. Diving operations

   For diving operations, Contractors shall submit a dive plan with their SH&E Plan to the WASD Safety Unit or their designee for review and comments prior to all dive taking place. Diving shall not commence until the dive plan has been returned with no further comments. Diving plans shall also incorporate a rescue plan identifying rescue equipment and rescue personnel. Dive plans must include divers' names and certifications.

5. Refueling

   Refueling plant and equipment with diesel or gasoline is a hazardous operation, refueling should never be carried out whilst the equipment is still hot from service, wait until the engine cools off. Avoid spills and use appropriate receptacles and funnels to prevent spillage. Wear the appropriate PPE. Store flammable liquids away from heat source, avoid naked flames, and ensure adequate ventilation and signage.

6. Housekeeping

   The Contractor shall ensure that their work area is maintained in a tidy and hazard free condition. Waste materials should be removed to prevent fires and tripping hazards. Storage of materials should not present additional hazards to the workplace.

7. Electrical Work

   Electrical work must be carried out by competent (as defined by OSHA) and trained personnel as per OSHA Regulation 29 CFR 1926 Subpart CC I. All electrical equipment and tools must be inspected for damage prior to use and properly maintained, regular inspection of electrical equipment should be carried out at least weekly, records of maintenance and inspection should be available for inspection by WASD representative and/or the CD PMCM team.

8. Lighting

Suitable and sufficient lighting shall be provided by the Contractor for nightshift working, task and access/egress lighting shall be provided as well as hazard warning lighting.

9. Fall Prevention

Working at height, all work at six (6) feet or above the Contractor must take measures to protect workers and reduce the risk of falling, falls can be prevented in numerous ways, scaffolding, edge protection, mobile elevated working platforms, harness and lanyard with anchor points etc. The Contractors SH&E Plan should include a fall prevention plan identifying the measures to be adopted for preventing falls.

10. Safety Inspections and reports

The Contractor shall carry out weekly safety inspections of the site and compile a weekly safety report, the reports shall be made available to WASD and the CD PMCM team.

11. Plant and Equipment

All plant and equipment shall be in good condition and fit for use, there shall be no defects likely to cause injury or damage to personnel, equipment and property. Plant and Equipment shall be tested and certified fit for use, test certificates and operator licenses shall be available for inspection by WASD Management or their designee. Defective Plant or Equipment shall not be used and tagged “do not use” to prevent unauthorized usage. Plant shall be fitted with reversing warning, audible and visual devices. Plant shall be inspected fit for use before each use, inspection records shall be available for review. All plant shall have access to firefighting equipment (fire extinguisher).

12. Hurricane plan

The Contractor shall include a hurricane plan within their SH&E plan, the plan shall identify the actions to be taken prior to and post hurricane conditions. Emergency contact information names and phone number shall be identified and included in the plan.

D. Accident Reports and Emergency Arrangements

1. The Contractor shall be solely responsible for initiating, maintaining and supervising all safety precautions and programs in connection with the work. The Contractor shall take all necessary precautions for the safety of, and shall provide the necessary protection to prevent the damage, injury or loss to:

2. All persons on site who may be affected by his acts or emissions.

3. All the work and materials and equipment to be incorporated therein, whether in storage on or off site; and other property off the site or adjacent thereto, including trees, shrubs, lawns, walks, pavements, roadways, structures, utilities and underground utilities, and underground facilities not designated for removal, relocation, or replacement in the course of construction.

4. Upon notification from the owner or its representatives, the Contractor shall promptly correct all deficiencies affecting the safety and well-being of the construction workers and the public that have been identified by the notice.

5. Should a situation of imminent danger be identified, work in the affected area must be suspended immediately until the condition has been corrected. Imminent danger is defined as the exposure or vulnerability to risk that is impending or about to occur as defined by the field representative or the WASD Engineer. The Contractor will not be entitled to future claims alleging impacts caused by the owner stoppage of the work due to safety reasons.

6. The Contractors SH&E plan shall identify emergency and accident reporting procedures, first aid facilities shall be available at all project sites. A map of the nearest hospital to the project site shall be included in the plan with driving directions. Accident and near misses shall be reported to the WASD safety Unit and the CD PMCM management team.

1.03 FEDERAL, STATE, AND LOCAL SAFETY REQUIREMENTS

A. Safety provisions shall conform to the Federal and State Departments of Labor Occupational Safety and Health Act (OSHA), and all other applicable Federal, State, County, and local laws, ordinances, codes, the requirements set forth herein, and all regulations that may be specified in other parts of these specifications. Where all of these are in conflict, the more stringent requirements shall prevail. Contractor's failure to thoroughly familiarize himself with the aforementioned safety provisions shall not relieve him from compliance with the obligations and penalties set forth therein.

B. All open excavations made in the earth shall be performed in compliance with the State of Florida Trench Safety Act, OSHA 29 CFR 1926.650, Subpart P (Chapter 90-96, Laws of Florida). The Contractor shall appoint a "competent person", in accordance with Subpart P, who shall be present at the jobsite. A "competent person" shall mean one who is capable of identifying existing and predictable hazards in the surroundings, or working conditions which are unsanitary, hazardous, or dangerous to employees, and who has authorization to take prompt corrective measures to eliminate them.

C. The Contractor shall familiarize himself with the "Underground Facility Damage Prevention

and Safety Act", Florida Statute 556. The Contractor shall contact the Sunshine State One-Call Center, at 1-800-432-4770, forty-eight (48) hours prior to all excavations. Failure to familiarize himself with the aforementioned safety provisions shall not relieve him from compliance with the obligations and penalties set forth therein.

D. Conduct operations in such a manner utilizing warning devices, such as traffic cones, barricades and warning lights that traffic, pedestrian and Department personnel are given adequate warning of hazards of the worksite as may be deemed necessary by the Department, Engineer of Record, and governing agency having jurisdiction over the work or political subdivision.

1.04 SAFE ACCESS BY FEDERAL, STATE, AND LOCAL GOVERNMENT OFFICIALS

The Contractor shall at all times provide proper facilities for safe access to the work by authorized government officials.

1.05 CONSTRUCTION SAFETY PROGRAM

A. Develop and maintain for the duration of this project, a safety program that will effectively incorporate and implement all required safety provisions. The Contractor shall appoint an employee who is qualified and authorized to supervise and enforce compliance with the safety program.

B. Certain products specified in these specifications contain warnings by the manufacturers that under certain conditions, if instructions for use are not followed, a hazardous condition may exist. It is the Contractor's responsibility to instruct his workmen in the safe use of the product, or all product substitutions.

C. The duty of the Engineer of Record to conduct construction review of the Contractor's performance is not intended to include a review or approval of the adequacy of the Contractor's safety supervisor, the safety program, or all safety measures taken in, on, or near the construction site.

1.06 SAFETY EQUIPMENT

A. As part of the safety program, maintain at office or other well-known place at the jobsite, safety equipment applicable to the work as prescribed by the governing safety authorities, all articles necessary for giving first-aid to the injured, and establish the procedure for the immediate relocation to a hospital or a doctor's care of all persons who may be injured on the jobsite.

B. Perform all necessary work to protect the general public from hazards, including, but not limited to, surface irregularities or unramped grade changes in pedestrian walkway or sidewalk, and trenches or excavations in roadway. Furnish barricades, lanterns, and proper signs to safeguard the public and work.

C. The performance of all work and all completed construction, particularly with respect to

ladders, platforms, structure openings, scaffolding, fall protection devices, shoring, logging, machinery guards and the like, shall be in accordance with the applicable governing safety authorities.

D. During construction, construct and at all times maintain satisfactory and substantial temporary chain link fencing, solid fencing, railings, barricades or steel plates, as applicable, at all openings, obstructions, or other hazards in streets and walkways. All such barriers shall have adequate warning lights as necessary, or required, for safety.

1.07 STORAGE OF HAZARDOUS MATERIALS

A. The Contractor is hereby cautioned that he cannot store all environmentally hazardous materials such as solvents, greases, lubricants or all other type of chemical substances at the project site. The Contractor shall be allowed to keep such materials at the site which is to be used for immediate use only.

B. The materials shall be stored and handled in a proper and safe manner and upon its use immediately dispose of the containers, cans, rags and remnants of the materials in a manner approved by the Department of Environmental Resources Management (DERM) at the Contractor's own cost. The Contractor cannot store empty containers at the site. In case of all violation, the Department will report such violation to DERM and the Contractor shall be subject to all the penalties and fines as required by State and County regulations.

1.08 NOT USED

1.09 TRAFFIC SAFETY AND ACCESS TO PROPERTY

A. Comply with all rules and regulations of the city, state, and county authorities regarding closing or restricting the use of public streets or highways. No public or private road shall be closed, except by express permission of the Department. Conduct the work so as to assure the least possible obstruction to traffic and normal commercial pursuits. Protect all obstructions within traveled roadways by installing approved barricades, signs, and lights where necessary for the safety of the public. The convenience of the general public and residents and the protection of persons and property are of prime importance and shall be provided for in an adequate and satisfactory manner.

B. Where traffic will pass over backfilled trenches before they are paved, the top of the trench shall be maintained in a condition that will allow normal vehicular traffic to pass over. Temporary access driveways must be provided where required. Cleanup operations shall follow immediately behind backfilling and the worksite shall be kept in an orderly condition at all times.

C. When flagmen and guards are required by regulation or when deemed necessary for safety, they shall be furnished with approved orange wearing apparel and other regulation traffic control devices.

1.10 FIRE PREVENTION AND PROTECTION

A. Perform all work in fire-safe manner. Furnish and maintain on the site adequate fire-fighting equipment capable of extinguishing incipient fires. Comply with applicable federal, local, and state fire-prevention regulations. Where these regulations do not apply, applicable parts of the National Fire Prevention Standard for Safeguarding Building Construction Operations (NFPA No. 241) shall be followed.

B. The Contractor shall have a Hot Work Permit Program and shall complete a permit prior to cutting or welding. A Fire Watch shall be designated to help monitor the hot work operation.

1.11 TRAFFIC CONTROL AND USE OF PUBLIC STREETS

A. The Contractor shall be responsible for traffic control as specified hereinafter. All reference to Miami-Dade County, its departments, or its published regulations, permits and data, shall be synonymous and interchangeable with other recognized governing bodies over particular areas of streets or their departments, published regulations, permits, or data. Abide by all applicable laws, regulations and codes thereof, pertaining to maintenance of public streets, detour of traffic, traffic control and other provisions as may be required for this project.

B. The Contractor shall be fully responsible for the maintenance of public streets, detour of traffic (including furnishing and maintaining regulatory and informative signs along the detour route), traffic control and other provisions, throughout the project as required by the Miami-Dade County Department of Public Works, Traffic Engineering Division (Traffic Division). Traffic shall be maintained according to corresponding typical traffic control details as outlined in the Miami-Dade County Public Works Manual. No street shall be completely blocked nor blocked more than one-half at all time, keeping the other half open for traffic without specific approval.

C. If required by the Traffic Division, employ the required number of uniformed off-duty policemen to maintain and regulate the flow of traffic through the construction area. The number of men required and the number of hours on duty necessary for the maintenance and regulation of the traffic flow shall be subject to their approval. If required for traffic control permits or agencies, the Contractor shall work odd or night hours, as required for traffic control reasons, and the cost of such work shall be considered as incidental to construction.

D. The Contractor shall provide all barricades and/or flashing warning lights necessary to warn motorist of the construction throughout the project.

E. Excavated or other material stored adjacent to or partially upon a roadway pavement shall be adequately marked for traffic safety at all times. Provide necessary access to all adjacent property during construction.

F. The contractor shall be responsible for the provision, installation and maintenance of all traffic control and safety devices, in accordance with specifications outlined in the Miami-

Dade County Public Works Manual. In addition, provide for the resetting of all traffic control and information signing removed during the construction period.

G. Where excavations are to be made in the vicinity of signalized intersections, attention is directed to the fact that vehicle loop detectors may have been embedded in the pavement. Verify these locations by inspecting the site of the work and by contacting the Sunshine State One-Call Center at 1-800-432-4770. All loop detector which is damaged, whether shown on the Plans or not, shall be repaired or replaced to the satisfaction of the Traffic Division.

H. Notify the Traffic Division twenty-four (24) hours in advance of the construction date, and forty-eight (48) hours in advance of construction within all signalized intersection.

I. Temporary pavement will be required over all cuts in pavement areas, and also where traffic is to be routed over swale or median areas. When the temporary pavement for routing traffic is no longer necessary, it shall be removed and the swale or median area restored to their previous condition.

1.12 CONTRACTOR'S RESPONSIBILITY FOR UTILITY PROPERTIES AND SERVICE

A. Where the Contractor's operation could cause damage or inconvenience to railway, telephone, fiber optic, television, electrical power, oil, gas, water, sewer, or irrigation systems, the Contractor shall make all arrangements necessary for the protection of these utilities and services or all other known utilities.

B. Notify all utility companies that are affected by the construction operation at least 48 hours in advance. Under no circumstance expose all utility without first obtaining permission from the appropriate agency. Once permission has been granted, locate, expose, and provide temporary support for all existing underground utilities and utility poles where necessary.

C. The Contractor and his subcontractors shall be solely and directly responsible to the owner and operators of such properties for all damage, injury, expense, loss, inconvenience, delay, suits, actions, or claims of all character brought because of all injuries or damage which may result from the construction operations under this project.

D. Neither the Department nor its officers or agents shall be responsible to the Contractor for damages as a result of the Contractor's failure to protect utilities encountered in the work.

E. In the event of interruption to domestic water, sewer, storm drain, or other utility services as a result of accidental breakage due to construction operations, promptly notify the proper authority. Cooperate with said authority in restoration of service as promptly as possible and bear all costs of repair. In no event shall interruption of all utility service be allowed outside working hours unless granted by the owner of the utility.

F. In the event water service lines that interfere with trenching are encountered, the

Contractor may, by obtaining prior approval of the water utility, cut the service, dig through, and restore the service with similar and equal materials at the Contractor's expense and as approved by the Department.

G. Drainage culverts that are at or near right angles to a pipeline and are removed by the Contractor shall be replaced in kind at the expense of the Contractor unless otherwise noted.

H. Replace, with material approved by the Department, at Contractor's expense, all and all other laterals, existing utilities or structures removed or damaged during construction, unless otherwise provided for in these specifications and as approved by the Department.

1.13 HURRICANE PREPAREDNESS

A. General

During such periods of time as are designated by the National Weather Service as being a hurricane alert, the Contractor shall perform all precautions as necessary to safeguard the work and property, including the removal of all small equipment and materials from the site, lashing all other equipment and materials to each other and to rigid construction, and all other safety measures as may be directed by the Engineer.

B. Upon Notification of a Hurricane Watch

The Contractor should prepare or have in place a Plan of Action for the specific actions to be taken on their particular projects.

C. Upon Notification of a Hurricane Warning

1) The Contractor shall implement their Plan of Action to protect the project and the public.

2) For construction projects within the public right-of-ways, the Contractor shall suspend his construction operations, backfill all open trenches, remove all construction equipment and materials from the right-of-way, remove unnecessary traffic barricades and signs and secure remaining barricades by "half burial" or "double sand bags".

1.14 WORKING IN CONFINED SPACES

Where a Contractor needs to work in a confined space, the Contractor must comply with the General Industry, OSHA Confined Space Standard, CFR 1910.146 or the equivalent Confined Space Standard in DFR 1926, Construction Standards.

PART 2 - PRODUCTS (Not Used)

PART 3 - EXECUTION (Not Used)

END OF SECTION

SECTION 01570A

TEMPORARY ENVIRONMENTAL CONTROLS

PART 1 -- GENERAL

1.1 DUST ABATEMENT

A. The CONTRACTOR shall prevent its operation from producing dust in amounts damaging to property, or causing a nuisance to persons occupying buildings in the vicinity of the Project Site. The CONTRACTOR shall be responsible for any damage resulting from dust originating from its operations. Dust abatement measures shall be continued until the CONTRACTOR is relieved of further responsibility by the Construction Manager.

B. Storage Piles: Enclose, cover, water (as needed), or apply non-toxic soil binders according to manufacturer's specifications on material piles (i.e. gravel, sand, dirt) with a silt content of 5 percent or greater.

C. Active Areas of Site: Water active construction areas and unpaved roads as needed and as requested by Construction Manager to prevent the propagation of dust.

D. Inactive Areas of Site: Apply non-toxic soil stabilizers according to manufacturer's specifications to inactive construction areas, or water as needed to maintain adequate dust control.

E. Vehicle Loads: Cover or maintain at least 2 feet of freeboard vertical distance between the top of the load and the top of the trailer sides on trucks hauling dirt, sand, soil, or other loose materials off of the Site.

F. Roads: When there is visible track-out onto a paved public road, install wheel washers where the vehicles exit and enter onto the paved roads and wash the undercarriage of trucks and any equipment leaving the Site on each trip. Sweep the paved street at the end of each shift with a Mobil Athey or similar water spray pick-up broom-type street sweeper as necessary or as directed.

G. Vehicle Speeds: If watering of unpaved roads is not sufficient to control dust, reduce vehicle speeds to 10 mph or less on such roads.

1.2 SEDIMENTATION ABATEMENT

A. The CONTRACTOR shall be responsible for collecting, storing, hauling, and disposing of spoil, silt, and waste materials in compliance with applicable federal, state, and local rules and regulations and the Contract Documents.

B. Install and maintain erosion and sediment control measures, such as swales, grade stabilization structures, berms, dikes, waterways, filter fabric fences, and sediment basins.

C. Filter fabric barrier systems, if used, shall be installed in such a manner that surface runoff will percolate through the system in sheet flow fashion and allow sediment to be retained and accumulated.

D. Remove and dispose of sediment deposits at the designated spoil area. If a spoil area is not indicated, dispose of sediment off-Site at a location not in or adjacent to a stream or floodplain. Sediment to be placed at the spoil area should be spread evenly, compacted, and stabilized. Sediment shall not be allowed to flush into a stream or drainage way.

E. Maintain erosion and sediment control measures until final acceptance or until requested by the Construction Manager to remove it.

1.3 STORMWATER POLLUTION PREVENTION

A. CONTRACTOR shall minimize stormwater pollution from the Site in accordance with The Storm Water Pollution Prevention Plan bound with the Bidding Documents as an appendix.

1.4 RUBBISH CONTROL

A. During the progress of the WORK, the CONTRACTOR shall keep the Site and other areas for which it is responsible in a neat and clean condition and free from any accumulation of rubbish. The CONTRACTOR shall dispose of rubbish and waste materials of any nature and shall establish regular intervals of collection and disposal of such materials and waste. The CONTRACTOR shall also keep its haul roads free from dirt, rubbish, and unnecessary obstructions resulting from its operations. Disposal of rubbish and surplus materials shall be off the Site in accordance with local codes and ordinances governing locations and methods of disposal and in conformance with applicable safety laws and the particular requirements of Part 1926 of the OSHA Safety and Health Standards for Construction.

1.5 SANITATION

A. Toilet Facilities: Fixed or portable chemical toilets shall be provided wherever needed for the use of employees. Toilets shall conform to the requirements of Part 1926 of the OSHA Standards for Construction.

B. Sanitary and Other Organic Wastes: The CONTRACTOR shall establish a regular daily collection of sanitary and organic wastes. Wastes and refuse from sanitary facilities provided by the CONTRACTOR or organic material wastes from any other source related to the CONTRACTOR's operations shall be disposed of away from the Site in a manner satisfactory to the Construction Manager and in accordance with Laws and Regulations pertaining thereto.

1.6 CHEMICALS

A. Chemicals used on the WORK or furnished for facility operation, whether defoliant, soil sterilant, herbicide, pesticide, disinfectant, polymer, reactant, or of other classification, shall show approval of either the U.S. Environmental Protection Agency or the U.S. Department of Agriculture. Use of such chemicals and disposal of residues shall be in strict accordance with the printed instructions of the manufacturer.

PART 2 -- PRODUCTS (NOT USED)

PART 3 -- EXECUTION (NOT USED)

END OF SECTION

SECTION 01660A

SITE ACCESS AND STORAGE

PART 1 -- GENERAL

1.1 EXISTING JOB SITE

A. The work of this project is to be performed at a facility owned by Department and identified elsewhere in these documents.

1.2 EXISTING UTILITIES

A. The relocation of existing utilities, as noted on the Plans, or for the convenience of the CONTRACTOR, shall be the responsibility of the CONTRACTOR. This work shall be completed by either the forces of the existing utility or the CONTRACTOR's forces at the discretion of the responsible utility. If the work is to be performed by the CONTRACTOR, all work shall be done in accordance with the utility company's requirements. The CONTRACTOR shall also be responsible for the coordination of all existing utility relocations with the appropriate utilities. Where temporary supports or protective encasements are required during the construction, the CONTRACTOR shall be responsible for this work at no additional cost. Under no circumstances shall the CONTRACTOR be authorized extra payment for this work, and all cost for the relocation shall be the responsibility of the CONTRACTOR.

B. Any conflicts between the field investigation and the information shown on the Plans shall be brought to the immediate attention of the Construction Manager.

1.3 SITE ACCESS AND STORAGE

A. The DEPARTMENT reserves the right to enter upon, and to use, any and all portions of the WORK performed hereunder (or under its other Contracts), whether completed or not, as may be required.

B. **Highway Limitations:** The CONTRACTOR shall make its own investigation of the condition of available public and private roads and of clearances, restrictions, bridge load limits, and other limitations affecting transportation and ingress and egress to the site of the WORK. It shall be the CONTRACTOR's responsibility to construct and maintain any haul roads required for its construction operations.

C. **Temporary Crossings:** Continuous, unobstructed, safe, and adequate pedestrian and vehicular access shall be provided to fire hydrants, parking lots, Vehicular access to all production facilities shall be maintained except when necessary construction precludes such access for reasonable periods of time.

D. **Street Use:** Nothing herein shall be construed to entitle the CONTRACTOR to the exclusive use of any public street, alleyway, or parking area during the performance of the WORK hereunder and it shall conduct its operations to not interfere unnecessarily with the DEPARTMENT or any other authorized work of utility companies or other agencies in such streets, alleyways, or parking areas. No street shall be closed plant operations without

first obtaining permission of the Construction Manager and the DEPARTMENT. Where excavation is being performed in any streets, one lane shall be kept open to traffic at all times, unless otherwise indicated. Toe boards shall be provided to retain excavated material if required by the Construction Manager or the DEPARTMENT. Fire hydrants on or adjacent to the WORK shall be kept accessible to fire-fighting equipment. Temporary provisions shall be made by the CONTRACTOR to assure the use of sidewalks and the proper functioning of gutters, storm drain inlets, and other drainage facilities.

1.4 CONTRACTOR'S WORK AND STORAGE AREA

A. The CONTRACTOR shall limit his operations, temporary facilities and storage of equipment and materials to the staging area approved by the Construction Manager. Should the CONTRACTOR require additional area for its operations or storage, the CONTRACTOR shall make its own arrangements for any necessary additional lands or facilities necessary for the proper execution of the WORK as required.

1. The CONTRACTOR may utilize private warehouse and/or office space for his storage area.

B. The CONTRACTOR shall submit to the Construction Manager for approval, a proposed plan and layout for temporary facilities and parking both for on the project site and on any additional lands obtained by the CONTRACTOR for its use during construction of the project. Prior to commencing any preparation remove, relocate and protect where necessary all existing underground and above ground facilities, pipelines, sprinkler systems, sod and all other existing installations. All these installations shall be restored to their initial conditions.

C. The CONTRACTOR shall construct and use a separate storage area for hazardous materials used in constructing the WORK.

1. For the purpose of this paragraph, hazardous materials to be stored in the separate area are products labeled with any of the following terms: Warning, Caution, Poisonous, Toxic, Flammable, Corrosive, Reactive, or Explosive. In addition, whether or not so labeled, the following materials shall be stored in the separate area: diesel fuel, gasoline, new and used motor oil, hydraulic fluid, cement, paints and paint thinners, 2-part epoxy coatings, sealants, asphaltic products, glues, solvents, wood preservatives, sand blast materials, and spill absorbent.

2. Hazardous materials shall be stored in groupings according to the Material Safety Data Sheets.

3. The CONTRACTOR shall develop and submit to the Construction Manager a plan for storing and disposing of the materials above.

4. The CONTRACTOR shall obtain and submit to the Construction Manager a single EPA number for wastes generated at the Site.

5. The separate storage area shall meet the requirements of authorities having jurisdiction over the storage of hazardous materials.

6. Hazardous materials that are delivered in containers shall be stored in the original containers until use. Hazardous materials delivered in bulk shall be stored in containers which meet the requirements of authorities having jurisdiction.

1.5 PARKING

A. Parking inside at any County Facility will be allocated by DEPARTMENT near the vicinity of the project site and in accordance with safety regulations. The CONTRACTOR shall be responsible for making its own arrangements for parking of its direct employees, subcontractors, vendors, etc. as may be necessary either on site or offsite.

B. Traffic and parking areas shall be maintained in a sound condition, free of excavated material, construction equipment, mud, and construction materials. The CONTRACTOR shall repair breaks, potholes, low areas which collect standing water, and other deficiencies.

PART 2 PRODUCTS (NOT USED)

PART 3 EXECUTION (NOT USED)

END OF SECTION

THIS PAGE

INTENTIONALLY

LEFT BLANK

SECTION 01700A

CONTRACT CLOSEOUT

PART 1 -- GENERAL

1.1 THE SUMMARY

A. Work Included: This section outlines the procedure to be followed in closing all contracts.

1.2 RELATED WORK

A. Section 01340A - SHOP DRAWINGS, PRODUCT DATA, AND SAMPLES.

B. Section 01720A - PROJECT RECORD DOCUMENTS.

1.3 FINAL CLEANUP

The CONTRACTOR shall promptly remove from the vicinity of the completed WORK, all rubbish, unused materials, concrete forms, construction equipment, and temporary structures and facilities used during construction. Final acceptance of the WORK by the DEPARTMENT will be withheld until the CONTRACTOR has satisfactorily performed the final cleanup of the Site.

1.4 FINAL INSPECTIONS

A. After final cleaning and upon written notice from the CONTRACTOR that he has inspected the work and it is 100% completed, the Construction Manager will make a preliminary inspection with the DEPARTMENT and the CONTRACTOR present. Upon completion of this preliminary inspection, the Construction Manager will submit to the CONTRACTOR a written final notice of any particulars which this inspection reveals as defective or incomplete work.

B. Upon receiving written notice from the Construction Manager, the CONTRACTOR shall immediately undertake the work required to remedy the defects and complete the work to the satisfaction of the DEPARTMENT.

C. Each defective item shall have a time duration agreed upon by both parties which shall not exceed 10 calendar days. Items may be eliminated individually from the list when approved by the Construction Manager.

D. When the CONTRACTOR has corrected or completed the items as listed in the Construction Manager's written notice, inform the Construction Manager, in writing, that the required work has been completed. Upon receipt of this notice, the Construction Manager, in the presence of the CONTRACTOR, shall make the final inspection of the Project.

E. Should the Construction Manager find all work satisfactory at the time of the inspection, the CONTRACTOR will be allowed to make application for final payment in accordance with the provisions of the General Covenants and Conditions.

1. If the CONTRACTOR fails to complete any item of work within a time period equal

to 100% of the agreed upon duration of time for all individual items, the Construction Manager will notify the CONTRACTOR in writing specifying the conditions pertaining thereto and directing the CONTRACTOR to comply with his directive. If the CONTRACTOR has not corrected such condition within 5 days of such notice, it shall be sufficient grounds for the Construction Manager to order the subject items discontinued and have them completely remedied in a timely manner at the expense of the CONTRACTOR.

2. No final estimate shall be issued by the Construction Manager until the Construction Manager has assured himself that the all items have been 100% completely finished and all other related documents are submitted.

1.5 GUARANTEES, BONDS, AND AFFIDAVITS

A. No Contract will be finalized until all guarantees, bonds, certificates, licenses, roofing warranty, C.O. and affidavits required for work or equipment as specified are satisfactorily filed with the Construction Manager.

PART 2 -- PRODUCTS (NOT USED)

PART 3 -- EXECUTION (NOT USED)

END OF SECTION

SECTION 01710A

CLEANING

PART 1 -- GENERAL

1.1 THE SUMMARY

A. This Section specifies the maintenance of the WORK site in a clean, orderly, hazard-free condition.

1.2 QUALITY ASSURANCE

A. Conduct cleaning and disposal operations in accordance with local ordinances and anti-pollution laws. Rubbish, volatile wastes, and other construction wastes shall be neither burned nor buried on the work site, and shall not be disposed of into storm drains, sanitary drains, streams or other waterways.

B. Final cleaning shall be accomplished either by workmen experienced in cleaning operations or by professional cleaners.

PART 2 -- PRODUCTS

2.1 ON-SITE WASTE CONTAINERS

A. Provide on-site waste containers for collection of waste materials, debris and rubbish.

2.2 CLEANING MATERIALS

A. Cleaning materials shall be as recommended by the manufacturer of the surface to be cleaned.

PART 3 -- EXECUTION

3.1 SAFETY REQUIREMENTS

A. Maintain work site in accordance with local ordinances and anti-pollution laws applicable to work site cleanliness and in a neat, orderly and hazard-free condition until final acceptance of the work. Catwalks, accessible underground structures, work site sidewalks and walkways adjacent to the work site shall be kept free from hazards caused by construction activities.

B. Store volatile wastes including rags in covered metal containers, and remove from work site daily.

C. Prevent accumulations of waste which create hazardous conditions.

D. Artificially ventilate spaces which are not naturally ventilated when volatile or noxious substances are present in those spaces.

3.2 INTERIM CLEANING

A. Perform cleaning every workday for duration of the Work. Structures, grounds, and areas

of the work site and public and private properties shall be maintained free from accumulations of waste materials and rubbish caused by construction operations on the work site. Place waste materials and rubbish in on-site containers.

B. Remove or secure loose material on open decks and on other exposed surfaces at the end of each day's work or more often to maintain work site in hazard-free condition. Prevent dislodgement of materials due to wind and other forces.

C. Wet down dry materials and rubbish to lay dust and prevent blowing dust.

D. Empty on-site waste containers whenever necessary so that trash overflow does not occur. Legally dispose of contents at either public or private dumping areas.

E. Control the handling of materials, debris and rubbish; do not drop or throw from heights.

F. Immediately remove spillages of fuels or oil or of construction-related materials from hauling routes or the site.

G. Perform cleaning operations so dust and other contaminants resulting from cleaning processes will not fall on wet, newly painted surfaces.

3.3 FINAL CLEANING

A. In addition to the cleaning performed above, in preparation for final inspection, remove grease, dust, dirt, rust stain from surfaces. Remove labels, fingerprints and other foreign materials from exposed exterior finished surfaces. Flush down all manhole covers and frames, valve boxes, and areas leaving such surfaces clean of all sand, laitance, etc.

B. The CONTRACTOR shall at all times during the execution of this Contract keep the work site free and clear of all rubbish and debris. As soon as the work is completed, the accumulated rubbish or surplus materials shall be promptly removed. The CONTRACTOR shall also restore in an acceptable manner all property, both public and private, which has been displaced or damaged during the prosecution of the work, and shall leave the site and vicinity unobstructed and in a neat and presentable condition.

C. In the event of delay exceeding two days after written notice is given to the CONTRACTOR by the Construction Manager to remove such rubbish or materials or to restore displaced or damaged property, the Construction Manager may employ such labor and equipment as he may deem necessary for the purpose, and the cost of such work, together with the cost of supervision, shall be charged to the CONTRACTOR and shall be deducted from any monies due him.

D. The project shall not be considered as having been completed until all rubbish and surplus materials have been removed and disposed of properly.

- **END OF SECTION -**

SECTION 03722A

HYDROBLASTING CLEANING

PART 1 - GENERAL

1.01 SECTION INCLUDES

A. Removal, dewatering, and disposal of all sludge, dirt, sand, rock, grease, roots and other solid or semi-solid materials within the tank

B. Hydroblasting of all concrete surfaces for structural inspection

C. Work in this Section includes hydroblasting (Water Pressure) cleaning.

1.02 RELATED SECTIONS

A. Section 01010A Summary of Work

B. Section 01501A Safety Requirements and Protection of Property

1.03 SCHEDULING

A. Water pressure cleaning may be performed during work hours as defined in Section 01010A, Part 1.5.

PART 2 – PRODUCTS (NOT USED)

PART 3 - EXECUTION

3.01 EXAMINATION

A. Verify that surfaces are ready to receive work.

3.02 PREPARATION

A. Prepare and protect adjacent work from damage.

B. Provide safety provisions per Section 01501A Safety Requirements and Protection of Property.

C. Furnish shoring for damaged areas

3.03 INSPECTION CLEANING

A. Water pressure clean and removal of all, including but not limited to, debris, sand, grit, organics, sewage, rags, and water.

B. Concrete surfaces shall be thoroughly cleaned to produce a clean interior surface free of all biological coatings, sand, rock, roots, sludge or other deleterious materials. Surfaces include, but not limited to, interior tank walls, curtains walls, columns, tank ceilings, tank floors, gates, and valves.

C. During all cleaning and preparation operations all necessary precautions shall be taken to protect the concrete surface from damage. During these operations, precautions shall also be taken to ensure that no damage is caused to public or private property adjacent to or served by these structures.

D. All sludge, dirt, sand, rock, grease, roots and other solid or semi-solid materials resulting from cleaning or surface preparation operations shall be removed from the immediate work site where it was removed.

E. All waste materials and debris removed during these operations shall be sufficiently dewatered and properly contained, loaded, transported, and disposed in accordance with applicable requirements of OSHA, EPA, FDEP, FDOT, and Miami-Dade County Regulatory and Economic Resources (RER). The Contractor shall use a licensed waste hauler for transportation of wastes at a licensed disposal facility as approved in advance by RER or agency having jurisdiction.

F. Only water generated from dewatering of removed materials with less than 400 mg/L of Total Suspended Solids may be conveyed to and deposited at the Miami Dade County's North District Waste Water Treatment Plant located at 2575 NE 156th Street, Miami, Florida through the tanks gravity drain line or adjacent sanitary sewer. All water exceeding 400 mg/L TSS must be legally disposed of off-site at the CONTRACTOR's expense.

G. All cost for removal and disposal, including permit, loading, and tipping fees, shall be paid by the CONTRACTOR, and shall be included in the prices quoted under the various quotation Items and no other compensation will be provided. Under no circumstances shall sludge or other debris removed during these operations be dumped or spilled into the streets, ditches, storm drains or other sanitary sewers.

H. Any load of material, or any portion thereof, disposed of in a non-permitted fashion will result in a charge to the CONTRACTOR in the amount of $200.00 per load, or any portion thereof, which sum will be deducted by the Department from any monies due the CONTRACTOR. This charge is in addition to any other damages specified elsewhere.

I. The CONTRACTOR shall keep the haul route and work area(s) neat and clean and reasonably free of odor, and shall bear all responsibility for the clean-up of any spill which occurs during the removal and transport of cleaning preparation by-products and the clean-up of any such material which is authorized by or pursuant to this Contract and in accord with applicable laws and regulations. The CONTRACTOR shall immediately cleanup any such spill or waste. If the CONTRACTOR fails to cleanup such spill or waste immediately, the County shall have the right to cleanup or arrange for its cleanup and may charge to the CONTRACTOR all costs, including administrative cost and overhead, incurred by the County in connection with such cleanup. The County may also charge the CONTRACTOR any cost incurred or penalties imposed on the County as a result of any spill, dump or discard. Under no circumstances is this material is to be discharged into the waterways or any place other than where authorized to do so by the appropriate authority. The term "CONTRACTOR" as used in this section shall also include the Contractor's subcontractors and other Contractors.

J. The general requirements for vehicles hauling such waste materials are as follows: Transport vehicles must be of type(s) approved for this application by Dade County,

HRS, and the State of Florida FDOT. General requirements are that the vehicles have watertight bodies, that they be properly equipped and fitted with seals and covers to prohibit material spillage or drainage, and that they be cleaned as often as is necessary to prevent deposit of material on roadways. Vehicles must be loaded within all legal weight limits and operated safely within all traffic and speed regulations.

K. The routes used by the CONTRACTOR for the conveyance of this material on a regular basis shall be subject to approval by the governing authority having jurisdiction over such routes.

3.04 PREPARATION OF CONCRETE SURFACES FOR INSPECTION

A. Preparation of Concrete Surfaces

1. Hydroblasting: The CONTRACTOR shall remove contaminants in the areas by hydroblasting. The hydroblasting operation shall conform to:

a. Hydroblasting shall be used to provide a clean, contamination-free, and sound surface. It shall not alter the profile of the concrete . Clean concrete surfaces of dirt or other contamination; rinse surface and allow to dry.
b. Acceptably cleaned and prepared surfaces shall be free of laitance, efflorescence, oil, grease, rust and other penetrating contaminants.
c. Equipment shall sustain water pressures of 3,500 psi at the nozzle to prevent concrete damage.
d. Use the equipment in accordance with the manufacturer's instructions. Organize the work to thoroughly cover the area specified for repair.
e. The hydroblasting operation shall conform to all local, state and federal air quality standards and regulations.

END OF SECTION

THIS PAGE

INTENTIONALLY

LEFT BLANK

ATTACHMENT A

GENERAL TERMS AND CONDITIONS

SPECIAL TERMS AND CONDITIONS

The following Sections are being provided for reference and may not necessarily reflect those provided to the pre-qualified vendors in executing Contract 00662.

THIS PAGE

INTENTIONALLY

LEFT BLANK

SECTION 1
GENERAL TERMS AND CONDITIONS

1.1. DEFINITIONS

Bid/Proposal – shall refer to any offer(s) submitted in response to this solicitation.
Bidder/Contractor/Proposer – shall refer to anyone submitting a Bid in response to this solicitation.
Bid Solicitation – shall mean this solicitation documentation, including any and all addenda.
Solicitation Submittal Form –must be completed and submitted with Bid/Proposal. The Bidder should indicate its name in the appropriate space on each page.
County – shall refer to Miami-Dade County, Florida
ISD – shall refer to the Miami-Dade Internal Services Department.
PMS – shall refer to the Miami-Dade Procurement Management Services Division within the Internal Services Department (ISD).
Registered Vendor – shall refer to a firm that has completed the Miami-Dade County Business Entity Registration process via the County's online Vendor Portal and has satisfied all requirements to enter into business agreements with the County.
Successful Bidder/Proposer – shall mean the Bidder(s)/Proposer(s) recommended for award.
Vendor Registration – shall refer to the online Business Entity Registration Application completed through the Vendor Portal.
BidSync – shall refer to the electronic bidding System used to solicit and receive solicitation responses for the County.

1.2. INSTRUCTIONS TO BIDDERS

A. Bidder Qualification

It is the policy of the County to encourage full and open competition among all available qualified vendors. All vendors regularly engaged in the type of work specified in the Bid Solicitation are encouraged to submit Bids. To be eligible for award of a contract (including small purchase orders), Bidders must become a Registered Vendor. Only Registered Vendors can be awarded County contracts. Vendors are required to register with the County's online Vendor Portal as described below in Section B "Vendor Registration". For additional information about online vendor registration, please contact the Vendor Services Section at (305) 375-5773.

The County endeavors to obtain the participation of all qualified small business enterprises. For information and to apply for certification, contact Small Business Development at 111 N.W. 1 Street, 19th Floor, Miami, FL 33128-1900, or by telephone at 305-375-3111. All autonomous personnel, quasi-judicial personnel, advisory personnel, and employees wishing to do business with the County are hereby advised they must comply with the applicable provisions of Section 2-11.1 of the Miami-Dade County Code relating to Conflict of Interest and Code of Ethics.

In accordance with 2-11.1 (y), the Miami Dade County Commission on Ethics and Public Trust (Ethics Commission) shall be empowered to review, interpret, render advisory opinions and letters of instruction and enforce the Conflict of Interest and Code of Ethics Ordinance.

B. Vendor Registration

To be recommended for award, the County requires that vendors complete a Miami-Dade County Vendor Registration via PMS' online Vendor Portal. Vendors can register online by visiting the Vendor Services Section of PMS' web site to access the Vendor Portal at the following link: http://www.miamidade.gov/procurement/vendor-registration.asp
To complete the registration, vendor(s) must have the following documents prior to registration: Miami-Dade County Local Tax Receipt (for firms with a physical location within Miami-Dade County), Certificate of Incorporation, W-9, IRS Letter 147C and an Original Notarized Summary Page. During the online registration process, the vendor shall complete the County's Uniform Affidavit Packet (Affidavit Form).

In the event that the vendor's online registration submittal is not approved, the County may in its sole discretion, award to the next lowest responsive, responsible Bidder. In becoming a Registered Vendor with Miami-Dade County, the vendor confirms its knowledge of and commitment to comply with the following:

1. ***Miami-Dade County Ownership Disclosure Affidavit***
   (Sec. 2-8.1 of the County Code)
2. ***Miami-Dade County Employment Disclosure Affidavit***
   (*County Ordinance No. 90-133, amending Section 2.8-1(d)(2) of the County Code)*
3. ***Miami-Dade Employment Drug-free Workplace Certification***
   (Section 2-8.1.2(b) of the County Code)
4. ***Miami-Dade Disability and Nondiscrimination Affidavit***
   (Article 1, Section 2-8.1.5 Resolution R182-00 Amending R-385-95)
5. ***Miami-Dade County Debarment Disclosure Affidavit***
   (Section 10.38 of the County Code)
6. ***Miami-Dade County Vendor Obligation to County Affidavit***
   (*Section 2-8.1 of the County Code)*
7. ***Miami-Dade County Code of Business Ethics Affidavit***
   (Article 1, Section 2-8.1(i) and 2-11(b)(1) of the County Code through (6) and (9) of the County Code and County Ordinance No 00-1 amending Section 2-11.1(c) of the County Code)
8. ***Miami-Dade County Family Leave Affidavit***
   (Article V of Chapter 11 of the County Code)
9. ***Miami-Dade County Living Wage Affidavit***
   (Section 2-8.9 of the County Code)
10. ***Miami-Dade County Domestic Leave and Reporting Affidavit***
    (Article 8, Section 11A-60 11A-67 of the County Code)
11. ***Miami-Dade County E-Verify Affidavit (Executive Order 11-116)***
12. ***Subcontracting Practices***
    (Ordinance 97-35)
13. ***Subcontractor /Supplier Listing***
    (Ordinance 97-104)
14. ***W-9 and IRS Letter 147C***
    The vendor must furnish these forms as required by the Internal Revenue Service.
15. ***Social Security Number***
    In order to establish a file for your firm, you must provide your firm's Federal Employer Identification Number (FEIN). If no FEIN exists, the Social Security Number of the owner or individual must be provided. This number becomes your "County Vendor Number". To comply with Section 119.071(5) of the Florida Statutes relating to the collection of an individual's Social Security Number, be aware that PMS requests the Social Security Number for the following purposes:
    - Identification of individual account records
    - To make payments to individual/vendor for goods and services provided to Miami-Dade County
    - Tax reporting purposes
    - To provide a unique identifier in the vendor database that may be used for searching and sorting departmental records
16. ***Office of the Inspector General***
    (Section 2-1076 of the County Code.)
17. ***Small Business Enterprises (SBE)***
    The County endeavors to obtain the participation of all small business enterprises pursuant to Sections 2-8.1.1.1.2 and 2-8.1.1.1.1 of the County Code and Title 49 of the Code of Federal Regulations. The SBE program provisions are available at http://www.miamidade.gov/business/business-development-legislation.asp

SECTION 1
GENERAL TERMS AND CONDITIONS

18. Antitrust Laws

By acceptance of any contract, the vendor agrees to comply with all antitrust laws of the United States and the State of Florida.

C. Public Entity Crimes

To be eligible for award of a contract, firms wishing to do business with the County must comply with the following:

Pursuant to Section 287.133(2)(a) of the Florida Statutes, a person or affiliate who has been placed on the convicted vendor list following a conviction for a public entity crime may not submit a Bid on a contract to provide any goods or services to a public entity, may not submit a Bid on a contract with a public entity for the construction or repair of a public building or public work, may not submit Bids on leases of real property to a public entity, may not be awarded or perform work as a contractor, supplier, subcontractor, or consultant under a contract with any public entity, and may not transact business with any public entity in excess of the threshold amount provided in Section 287.017 of the Florida Statutes, for CATEGORY TWO for a period of 36 months from the date of being placed on the convicted vendor list.

D. Request for Additional Information

1. Pursuant to Section 2-11.1(t) of the County Code, all Bid Solicitations, once advertised and until an award recommendation has been forwarded to the appropriate authority are under the **"Cone of Silence"**. Any communication or inquiries, except for clarification of process or procedure already contained in the solicitation, are to be made in writing to the attention of the Procurement Officer identified on the front page of the solicitation via the BidSync System with a copy sent to the Clerk of the Board, clerkbcc@miamidade.gov.
2. Procurement Management may issue an addendum in response to any inquiry received, prior to Bid opening, which changes, adds to or clarifies the terms, provisions or requirements of the solicitation. The Bidder should not rely on any representation, statement or explanation whether written or verbal, other than those made in this Bid Solicitation document or in any addenda issued. Where there appears to be a conflict between this Bid Solicitation and any addenda, the last addendum issued shall prevail.
3. It is the Bidder's responsibility to ensure receipt of all addenda, and any accompanying documentation.

E. Contents of Bid Solicitation and Bidders' Responsibilities

1. It is the responsibility of the Bidder to become thoroughly familiar with the Bid requirements, terms and conditions of this solicitation. Pleas of ignorance by the Bidder of conditions that exist or that may exist will not be accepted as a basis for varying the requirements of the County, or the compensation to be paid to the Bidder.
2. In the event a Bidder wishes to protest any part of the General Conditions, Special Conditions and/or Technical Specifications contained in the Bid Solicitation it must file a notice of protest in writing with the issuing department no later than 48 hours prior to the Bid opening date and hour specified in the solicitation. Failure to file a timely notice of protest will constitute a waiver of proceedings.
3. This solicitation is subject to all legal requirements contained in the applicable County Ordinances, Administrative/Implementing Orders, and Resolutions, as well as all applicable State and Federal Statutes. Where conflict exists between this Bid Solicitation and these legal requirements, the authority shall prevail in the following order: Federal, State and local.
4. It is the responsibility of the Bidder/Proposer, prior to conducting any lobbying **regarding this** solicitation to file the appropriate form with the Clerk of the Board **stating that a particular lobbyist is authorized to represent the Bidder/Proposer.** The Bidder/Proposer shall also file a form with the Clerk of the Board at the point in time at which a lobbyist is no longer authorized to represent said Bidder/ Proposer. Failure of a Bidder/Proposer to file the appropriate form required, in relation to each solicitation, may be considered as evidence that the Bidder/Proposer is not a responsible contractor.

F. Change or Withdrawal of Bids

1. Changes to Bid - Prior to the scheduled Bid opening a Bidder may change its Bid by submitting a new Bid via the BidSync System. No changes to a Bid will be accepted after the Bid has closed.
2. Withdrawal of Bid – A Bid shall be irrevocable unless the Bid is withdrawn as provided herein. A bid may be withdrawn one hundred-eight (180) days after the Bid has been opened and prior to award, by submitting a letter to the contact person identified on the front cover of this Bid Solicitation. The withdrawal letter must be on company letterhead and signed by an authorized agent of the Bidder.

G. Conflicts within the Bid Solicitation

Where there appears to be a conflict between the General Terms and Conditions, Special Conditions, the Technical Specifications, the Bid Submittal Section, or any addendum issued, the order of precedence shall be: the last addendum issued, the Bid Submittal Section, the Technical Specifications, the Special Conditions, and then the General Terms and Conditions.

H. Prompt Payment Terms

It is the policy of Miami-Dade County that payment for all purchases by County agencies and the Public Health Trust shall be made in a timely manner and that interest payments be made on late payments. In accordance with Florida Statutes, Section 218.74 and Section 2-8.1.4 of the Miami-Dade County Code, the time at which payment shall be due from the County or the Public Health Trust shall be forty-five (45) days from receipt of a proper invoice. Billings from prime vendors under either services or goods contracts pursuant to Sections 2-8.1.1.1.1 or 2-8.1.1.1.2, respectively, that are a SBE contract set-aside, bid preference or contain a subcontractor goal, shall be promptly reviewed and payment made to the certified small businesses on those amounts not in dispute, within fourteen (14) calendar days of receipt of such billing or invoice. All payments for undisputed amounts due from the County or the Public Health Trust, and not made within the time specified by this section, shall bear interest from thirty (30) days after the due date at the rate of one percent (1%) per month on the unpaid balance. Further, proceedings to resolve disputes for payment of obligations shall be concluded by final written decision of the County Mayor, or his or her designee(s), not later than sixty (60) days after the date on which the proper invoice was received by the County or the Public Health Trust.

I. Accounts Receivable Adjustments

In accordance with Miami-Dade County Implementing Order 3-9, Accounts Receivable Adjustments, if money is owed by the Contractor to the County, whether under this Contract or for any other purpose, the County reserves the right to retain such amount from payment due by County to the Contractor under this Contract. Such retained amount shall be applied to the amount owed by the Contractor to the County. The Contractor shall have no further claim to such retained amounts which shall be deemed full accord and satisfaction of the amount due by the County to the Contractor for the applicable payment due herein.

1.3. PREPARATION OF BIDS

A. Bidders are required to register, free of charge, with BidSync to establish a vendor account to view and respond to solicitations issued by Miami-Dade County.

B. The solicitation submittal form and associated solicitation documents defines requirements of items to be purchased, and must be completed and submitted as outlined within the solicitation via the BidSync System. Use of any other form will result in the rejection of the Bidder's offer.

C. The solicitation submittal form must be fully completed and provided with

SECTION 1
GENERAL TERMS AND CONDITIONS

your bid/proposal. Failure to comply with these requirements may cause the Bid to be rejected.

D. An authorized agent of the Bidder's firm must sign the solicitation submittal form and submit it electronically. **FAILURE TO SIGN THE SOLICITATION SUBMITTAL FORM SHALL RENDER THE BID NON-RESPONSIVE.**

E. The Bidder may be considered non-responsive if bids are conditioned to modifications, changes, or revisions to the terms and conditions of this solicitation.

F. The Bidder may submit alternate Bid(s) for the same solicitation provided that such offer is allowable under the terms and conditions. The alternate Bid must meet or exceed the minimum requirements and be submitted on a separate Bid submittal marked "Alternate Bid".

G. When there is a discrepancy between the unit prices and any extended prices, the unit prices will prevail.

1.4. CANCELLATION OF BID SOLICITATION

Miami-Dade County reserves the right to cancel, in whole or in part, any solicitation when it is in the best interest of the County.

1.5. AWARD OF BID SOLICITATION

A. This Bid may be awarded to the responsible Bidder meeting all requirements as set forth in the solicitation. The County reserves the right to reject any and all Bids, to waive irregularities or technicalities and to re-advertise for all or any part of this Bid Solicitation as deemed in its best interest. The County shall be the sole judge of its best interest.

B. When there are multiple line items in a solicitation, the County reserves the right to award on an individual item basis, any combination of items, total low Bid or in whichever manner deemed in the best interest of the County.

C. The County reserves the right to reject any and all Bids if it is determined that prices are excessive, best offers are determined to be unreasonable, or it is otherwise determined to be in the County's best interest to do so.

D. The County reserves the right to negotiate prices with the low bidder, provided that the scope of work of this solicitation remains the same.

E. Award of this Bid Solicitation will only be made to firms that have completed the Miami-Dade County Business Entity Registration Application and that satisfy all necessary legal requirements to do business with Miami-Dade County. Firms domiciled in Miami-Dade County must present a copy of their Miami-Dade County issued Local Business Tax Receipt.

F. Pursuant to County Code Section 2-8.1(g), the Bidder's performance as a prime contractor or subcontractor on previous County contracts shall be taken into account in evaluating the Bid received for this Bid Solicitation.

G. To obtain a copy of the Bid tabulation, upon notice of Award Recommendation Bidder(s) may request bid tabulations or other award information by contacting the contact person outlined within the solicitation. Information will then be provided electronically.

H. The Bid Solicitation, any addenda and/or properly executed modifications, the purchase order, work order, and any change order(s) shall constitute the resultant contract.

I. In accordance with Resolution R-1574-88, the Director of the Internal Services Department or authorized designee will decide all tie Bids.

J. Award of this Bid may be predicated on compliance with and submittal of all required documents as stipulated in the Solicitation.

K. The County reserves the right to request and evaluate additional information from any bidder after the submission deadline as the County deems necessary.

1.6. CONTRACT EXTENSION

The County reserves the right to exercise its option to extend a contract for up to one hundred-eighty (180) calendar days beyond the current contract period and will notify the contractor in writing of the extension.

This contract may be extended beyond the initial one hundred-eighty (180) day extension period upon mutual agreement between the County and the successful Bidder(s) upon approval by the Board of County Commissioners.

1.7. WARRANTY

All warranties express and implied, shall be made available to the County for goods and services covered by this Bid Solicitation. All goods furnished shall be fully guaranteed by the successful Bidder against factory defects and workmanship. At no expense to the County, the successful Bidder shall correct any and all apparent and latent defects that may occur within the manufacturer's standard warranty. The Special Conditions of the Bid Solicitation may supersede the manufacturer's standard warranty.

1.8. MATERIALS SHALL BE NEW AND WARRANTED AGAINST DEFECTS.

All materials, except where recycled content is specifically requested, supplied by the awarded Bidder under the Contract shall be new, warranted for their merchantability, and fit for the particular purpose herein. In the event any of the materials supplied to the County by the awarded Bidder are found to be defective or do not conform to specifications: (1) the materials may be returned to the awarded Bidder at its expense and the Contract terminated or (2) the County may require the awarded Bidder to replace the materials at its expense.

1.9. ESTIMATED QUANTITIES

Estimated quantities or dollars are for Bidder's guidance only: (a) estimates are based on the County's anticipated needs and/or usage during a previous contract period and; (b) the County may use these estimates to determine the low Bidder. Estimated quantities do not contemplate or include possible additional quantities that may be ordered by other government, quasi-government or non-profit entities utilizing this contract under the Joint Purchase portion of the County User Access Program (UAP) described in Section 1.36 and the resulting contract, if that section is present in this solicitation document. No guarantee is expressed or implied as to quantities or dollars that will be used during the contract period. The County is not obligated to place any order for the given amount subsequent to the award of this Bid Solicitation.

1.10. NON-EXCLUSIVITY

It is the intent of the County to enter into an agreement with the successful Bidder that will satisfy its needs as described herein. However, the County reserves the right as deemed in its best interest to perform, or cause to be performed, the work and services, or any portion thereof, herein described in any manner it sees fit, including but not limited to: award of other contracts, use of any contractor, or perform the work with its own employees.

1.11. LOCAL PREFERENCE

The evaluation of competitive bids is subject to Section 2-8.5 of the Miami-Dade County Code, which, except where contrary to federal and state law, or any other funding source requirements, provides that preference be given to local businesses. Vendors shall affirm in writing their compliance with the requirements of Section 2-8.5 at the time of submitting their bid or proposal to be eligible for consideration as a "local business" under this section.

A. A Local Business shall be defined as:

1. a business that has a valid Business Tax Receipt issued by Miami-Dade County at least one year prior to bid or proposal submission;
2. a business that has physical business address located within the limits of Miami-Dade County from which the vendor operates or performs business ("Local Business Location"). The vendor must own or lease

the Local Business Location and the address, or another Local Business Location where the owner maintains the appropriate business permits, must have served as the place of employment for at least three full time employees of the vendor for the continuous period of one year prior to the bid or proposal submission. By exception, if the vendor is a Small Business Enterprise certified pursuant to the County Code, the vendor's Local Business Location must have served as the place of employment for at least one full time employee of the vendor for the continuous period of one year prior to the bid or proposal submission. Post Office Boxes are not verifiable and shall not be used for the purpose of establishing said physical address; and

3. a business that contributes to the economic development and well-being of Miami-Dade County in a verifiable and measurable way. This may include but not be limited to the retention and expansion of employment opportunities and the support and increase in the County's tax base. Either of the following objective criteria may be used to satisfy this requirement:
   (a) vendor has at least ten (10) permanent full time employees, or part time employees equivalent to 10 FTE ("full-time equivalent" employees working 40 hours per week) that live in Miami-Dade County, or at least 25% of its employees that live in Miami-Dade County, or
   (b) vendor contributes to the County's tax base by paying either real property taxes or tangible personal property taxes to Miami-Dade County, or
   (c) some other verifiable and measurable contribution to the economic development and well-being of Miami-Dade County.

B. Additionally, a Locally-Headquartered Business shall mean a Local Business as defined above which a "principal place of business" has in Miami-Dade County. "Principal place of business" means *the nerve center or the center of overall direction, control, and coordination of activities of the bidder*. If the bidder has only one business location, such business location shall be its principal place of business.

C. If the Low Bidder is a not a Local Business, then any and all responsive and responsible Local Businesses submitting a price within ten percent of the Low Bid, the Low Bidder, and any and all responsive and responsible Locally-Headquartered Businesses submitting a price within fifteen percent of the Low Bid, shall have an opportunity to submit a best and final bid equal to or lower than the Low Bid.

D. If the Low Bidder is a Local Business which is not a Locally-Headquartered Business, then any and all responsive and responsible Locally Headquartered Businesses submitting a price within five percent of the Low Bid, and the Low Bidder shall have an opportunity to submit a best and final bid equal to or lower than the Low Bid.

1.12. CONTINUATION OF WORK

Any work that commences prior to and will extend beyond the expiration date of the current contract period shall, unless terminated by mutual written agreement between the County and the successful Bidder, continue until completion at the same prices, terms and conditions.

1.13. BID PROTEST

A recommendation for contract award or rejection of award may be protested by a Bidder in accordance with the procedures contained in Sections 2-8.3 and 2-8.4 of the County Code, as amended, and as established in Implementing Order No. 3-21.

A. A written intent to protest shall be filed with the Clerk of the Board and emailed to all participants in the competitive process within three (3) County work days of the filing of the County Mayor's recommendation. This three-day period begins on the County workday after the filing of the County Mayor's recommendation. Such written intent to protest shall state the particular grounds on which it is based and shall be accompanied by a filing fee as detailed below.

B. The written intent to protest shall be accompanied by a non-refundable filing fee, payable to the Clerk of the Board, in accordance with the schedule provided below:

Award Amount	Filing Fee
$25,000-$250,000	$ 500
$250,001-$500,000	$1,000
$500,001-$5 million	$3,000
Over $5 million	$5,000

The protester shall then file all pertinent documents and supporting evidence with the Clerk of the Board and mail copies to all participants in the competitive process and to the County Attorney within three (3) County workdays after the filing of a written intent to protest.

C. For award recommendations greater than $250,000 the following shall apply:
The County's recommendation to award or reject will be immediately communicated (via email) to all participants in the competitive process and filed with the Clerk of the Board.

D. For award recommendations from $25,000 to $250,000 the following shall apply:
Participants may view recommendations to award on the PMS website:
https://www.miamidade.gov/DPMww/AwardRecommendations.aspx or call the contact person as identified on the cover page of the Bid Solicitation.

1.14. LAWS AND REGULATIONS

The successful Bidder shall comply with all laws and regulations applicable to provide the goods and/or services specified in this Bid Solicitation. The Bidder shall comply with all federal, state and local laws that may affect the goods and/or services offered.

1.15. LICENSES, PERMITS AND FEES

The awarded bidder(s) shall hold all licenses and/or certifications, obtain and pay for all permits and/or inspections, and comply with all laws, ordinances, regulations and building code requirements applicable to the work required herein. Damages, penalties, and/or fines imposed on the County or an awarded bidder for failure to obtain and maintain required licenses, certifications, permits and/or inspections shall be borne by said awarded bidder.

1.16. SUBCONTRACTING

Unless otherwise specified in this Bid Solicitation, the successful Bidder shall not subcontract any portion of the work without the prior written consent of the County. The ability to subcontract may be further limited by the Special Conditions. Subcontracting without the prior consent of the County may result in termination of the contract for default. When Subcontracting is allowed the Bidder shall comply with County Resolution No. 1634-93, Section 10-34 of the County Code and County Ordinance No. 97-35. The Bidder shall not change or substitute first tier subcontractors or direct suppliers or the portions of the contract work to be performed or materials to be supplied from those identified except upon written approval of the County.

1.17. SUBCONTRACTORS – RACE, GENDER AND ETHNIC MAKEUP OF OWNERS AND EMPLOYEES

Pursuant to Sections 2-8.1, 2-8.8 and 10.34 of the County Code (as amended by Ordinance No. 11-90), for all contracts which involve the expenditure of one hundred thousand dollars ($100,000) or more, the entity contracting with the County must report to the County the race, gender, and ethnic origin of the

owners and employees of its first tier subcontractors (refer to the Subcontractor/Supplier Listing Sub 100 form). In the event that the successful Bidder demonstrates to the County prior to award that this information is not reasonably available at that time, the successful Bidder shall be obligated by contract to exercise diligent efforts to obtain that information and to provide the same to the County not later than ten (10) days after it becomes available and, in any event, prior to final payment under the contract. As a condition of final payment under a contract, the successful Bidder shall identify subcontractors used in the work, the amount of each subcontract, and the amount paid and to be paid to each subcontractor (refer to the Subcontractor Payment Report Sub 200 form at: http://www.miamidade.gov/business/library/forms/subcontractors-payment.pdf

1.18. ASSIGNMENT

The successful Bidder shall not assign, transfer, hypothecate, or otherwise dispose of this contract, including any rights, title or interest therein, or its power to execute such contract to any person, company or corporation without the prior written consent of the County.

1.19. DELIVERY

Unless otherwise specified in the Bid Solicitation, prices quoted shall be F.O.B. Destination. Freight shall be included in the proposed price.

1.20. RESPONSIBILITY AS EMPLOYER

The employee(s) of the successful Bidder shall be considered to be at all times its employee(s), and not an employee(s) or agent(s) of the County or any of its departments. The successful Bidder shall provide competent employee(s) capable of performing the required services. The County may require the successful Bidder to remove any employee it deems unacceptable. All employees of the successful Bidder shall wear proper identification.

1.21. INDEMNIFICATION

The successful Bidder shall indemnify and hold harmless the County and its officers, employees, agents and instrumentalities from any and all liability, losses or damages, including attorney's fees and costs of defense, which the County or its officers, employees, agents or instrumentalities may incur as a result of claims, demands, suits, causes of actions or proceedings of any kind or nature arising out of, relating to or resulting from the performance of the agreement by the successful Bidder or its employees, agents, servants, partners, principals or subcontractors. The successful Bidder shall pay all claims and losses in connection therewith, and shall investigate and defend all claims, suits or actions of any kind or nature in the name of the County, where applicable, including appellate proceedings, and shall pay all costs, judgments, and attorney's fees which may be incurred thereon. The successful Bidder expressly understands and agrees that any insurance protection required by this Agreement or otherwise provided by the successful Bidder shall in no way limit the responsibility to indemnify, keep and save harmless and defend the County or its officers, employees, agents and instrumentalities as herein provided.

1.22. INSURANCE REQUIREMENTS

A. The contractor shall furnish to the Vendor Services Section of PMS, 111 NW 1st Street, Suite 1300, Miami, Florida 33128, Certificate(s) of Insurance which indicate that insurance coverage has been obtained which meets the requirements as outlined below:

1. Worker's Compensation Insurance for all employees of the vendor as required by Florida Statute 440. Failure to maintain such insurance throughout the term of the contract shall be a cause for debarment under Section 10-38 of the County Code.
2. Commercial General Liability Insurance on a comprehensive basis in an amount not less than **$300,000** combined single limit per occurrence for bodily injury and property damage. **Miami-Dade County must be shown as an additional insured with respect to this coverage.**
3. Automobile Liability Insurance covering all owned, non-owned and hired vehicles used in connection with the work, in an amount not less than **$300,000** combined single limit per occurrence for bodily injury and property damage.

B. All required insurance policies shall be issued by companies authorized to do business under the laws of the State of Florida, with the following qualifications:

The company must be rated no less than "A-" as to management, and no less than "Class VII" as to financial strength, by the latest edition of Best's Insurance Guide, published by A.M. Best Company, Oldwick, New Jersey or its equivalent, subject to the approval of the County's ISD Risk Management Division OR

The company must hold a valid Florida Certificate of Authority as shown in the latest "List of All Insurance Companies Authorized or Approved to do Business in Florida", issued by the State of Florida Department of Financial Services.

C. **Certificates of Insurance must meet the following requirements:**

1. Signature of agent must be included.
2. If Automobile Liability Insurance is required above, insurance must be provided for all of the following vehicles:
   a) Owned
   b) Non-owned
   c) Hired
3. If General or Public Liability Insurance is required above, Certificate of Insurance must show Miami-Dade County as an additional insured for that coverage.
4. Certificate Holder must read exactly as presented below:

Miami-Dade County
111 N.W. 1st Street, Suite 2340
Miami, FL 33128-1974

D. Compliance with the requirements in this Section shall not relieve the successful Bidder of its liability and obligation under this, or under any other, section of the Contract. The successful Bidder shall provide to the County the insurance documents within ten (10) business days after notification of recommendation to award. If the certificate submitted does not include the coverages outlined in the terms and conditions of this solicitation, the successful Bidder shall have an additional five (5) business days to submit a corrected certificate to the County. Failure of the successful Bidder to provide the required insurance documents in the manner and within the timeframes prescribed within five (5) business days may result in the bidder being deemed non-responsible and the issuance of a new award recommendation.

No work shall be authorized or shall commence under the Contract until the successful Bidder has complied with the foregoing insurance requirements.

E. The successful Bidder shall assure that the Certificates of Insurance required in conjunction with this Section remain in full force for the term of the Contract, including any renewal or extension periods that may be exercised by the County. If the Certificate(s) of Insurance is scheduled to expire during the term of the Contract, the successful Bidder shall submit new or renewed Certificate(s) of Insurance to the County a minimum of ten (10) calendar days before such expiration.

F. In the event that expired Certificates of Insurance are not replaced or renewed to cover the Contract period, the County may suspend the Contract until the new or renewed certificates are received by the County in the manner prescribed herein. If such suspension exceeds thirty (30) calendar days, the County may, at its sole discretion, terminate the Contract for cause and the successful Bidder shall be responsible for all direct and indirect costs associated with such termination.

SECTION 1
GENERAL TERMS AND CONDITIONS

1.23. COLLUSION

The successful Bidder recommended for award as the result of a competitive solicitation for any County purchases of supplies, materials and services (including professional services, other than professional architectural, engineering and other services subject to Sec. 2-10.4 and Sec. 287.055 Fla Stats.), purchase, lease, permit, concession or management agreement shall, within five (5) business days of the filing of such recommendation, submit an affidavit under the penalty of perjury, on a form provided by the County: stating either that the contractor is not related to any of the other parties bidding in the competitive solicitation or identifying all related parties, as defined in this Section, which bid in the solicitation; and attesting that the contractor's proposal is genuine and not sham or collusive or made in the interest or on behalf of any person not therein named, and that the contractor has not, directly or indirectly, induced or solicited any other proposer to put in a sham proposal, or any other person, firm, or corporation to refrain from proposing, and that the proposer has not in any manner sought by collusion to secure to the proposer an advantage over any other proposer. In the event a recommended contractor identifies related parties in the competitive solicitation its bid shall be presumed to be collusive and the recommended contractor shall be ineligible for award unless that presumption is rebutted in accordance with the provisions of Sec. 2-8.1.1. Any person or entity that fails to submit the required affidavit shall be ineligible for contract award.

a. The Collusion Affidavit will be requested from bidders/proposers once bids/proposals are received and evaluated.
b. Failure to provide a Collusion Affidavit within 5 business days after the recommendation to award has been filed with the Clerk of the Board shall be cause for the contractor to forfeit their bid bond if applicable.

1.24. MODIFICATION OF CONTRACT

The contract may be modified by mutual consent, in writing through the issuance of a modification to the contract, purchase order, change order or award sheet, as appropriate.

1.25. TERMINATION FOR CONVENIENCE

The County, at its sole discretion, reserves the right to terminate this contract without cause upon thirty (30) days written notice. Upon receipt of such notice, the successful Bidder shall not incur any additional costs under this contract. The County shall be liable only for reasonable costs incurred by the successful Bidder prior to notice of termination. The County shall be the sole judge of "reasonable costs."

1.26. TERMINATION FOR DEFAULT

The County reserves the right to terminate this contract, in part or in whole, or place the vendor on probation in the event the successful Bidder fails to perform in accordance with the terms and conditions stated herein. The County further reserves the right to suspend or debar the successful Bidder in accordance with the appropriate County ordinances, resolutions and/or administrative/implementing orders. The vendor will be notified by letter of the County's intent to terminate. In the event of termination for default, the County may procure the required goods and/or services from any source and use any method deemed in its best interest. All re-procurement cost shall be borne by the successful Bidder.

1.27. FRAUD AND MISREPRESENTATION

Pursuant to Section 2-8.4.1 of the Miami-Dade County Code, any individual, corporation or other entity that attempts to meet its contractual obligations with the County through fraud, misrepresentation or material misstatement, may be debarred for up to five (5) years. The County as a further sanction may terminate or cancel any other contracts with such individual, corporation or entity. Such individual or entity shall be responsible for all direct or indirect costs associated with termination or cancellation, including attorney's fees.

1.28. OFFICE OF THE INSPECTOR GENERAL

Miami-Dade County has established the Office of the Inspector General, which is authorized and empowered to review past, present, and proposed County and Public Health Trust programs, contracts, transactions, accounts, records and programs. The Inspector General (IG) has the power to subpoena witnesses, administer oaths, require the production of records and monitor existing projects and programs. The Inspector General may, on a random basis, perform audits on all County contracts. The cost of random audits shall be incorporated into the contract price of all contracts and shall be one quarter (1/4) of one (1) percent of the contract price, except as otherwise provided in Section 2-1076 of the County Code.

1.29. PRE-AWARD INSPECTION

The County may conduct a pre-award inspection of the Bidder's site or hold a pre-award qualification hearing to determine if the Bidder is capable of performing the requirements of this bid solicitation.

1.30. PROPRIETARY/CONFIDENTIAL INFORMATION

The Bidder acknowledges and agrees that the submittal of the Bid is governed by Florida's Government in the Sunshine Laws and Public Records Laws as set forth in Florida Statutes Section 286.011 and Florida Statutes Chapter 119. As such, all material submitted as part of, or in support of, the bid will be available for public inspection after opening of bids and may be considered by the County or a selection committee in public.

By submitting a bid pursuant to this solicitation, you agree that all such materials may be considered to be public records. The Bidder shall not submit any information in response to this Solicitation which the Bidder considers to be a trade secret, proprietary or confidential.

In the event that the Bid contains a claim that all or a portion of the Bid submitted contains confidential, proprietary or trade secret information, the Bidder, by signing below, knowingly and expressly waives all claims made that the Bid, or any part thereof no matter how indicated, is confidential, proprietary or a trade secret and authorizes the County to release such information to the public for any reason.

1.31. HEALTH INSURANCE PORTABILITY AND ACCOUNTABILITY ACT (HIPAA)

Any person or entity that performs or assists Miami-Dade County with a function or activity involving the use or disclosure of "individually identifiable health information (IIHI) and/or Protected Health Information (PHI) shall comply with the Health Insurance Portability and Accountability Act (HIPAA) of 1996 and the Miami-Dade County Privacy Standards Administrative Order. HIPAA mandates for privacy, security and electronic transfer standards that include but are not limited to:

1. Use of information only for performing services required by the contract or as required by law;
2. Use of appropriate safeguards to prevent non-permitted disclosures;
3. Reporting to Miami-Dade County of any non-permitted use or disclosure;
4. Assurances that any agents and subcontractors agree to the same restrictions and conditions that apply to the Bidder/Proposer and reasonable assurances that IIHI/PHI will be held confidential;
5. Making Protected Health Information (PHI) available to the customer;
6. Making PHI available to the customer for review and amendment; and incorporating any amendments requested by the customer;
7. Making PHI available to Miami-Dade County for an accounting of disclosures; and
8. Making internal practices, books and records related to PHI available to Miami-Dade County for compliance audits.

SECTION 1
GENERAL TERMS AND CONDITIONS

PHI shall maintain its protected status regardless of the form and method of transmission (paper records, and/or electronic transfer of data). The Bidder/ Proposer must give its customers written notice of its privacy information practices including specifically, a description of the types of uses and disclosures that would be made with protected health information.

1.32. CHARTER COUNTY TRANSIT SYSTEM SALES SURTAX

When proceeds from the Charter County Transit System Sales Surtax levied pursuant to Section 29.121 of the Code of Miami-Dade County are used to pay for all or some part of the cost of this contract, no award for those portions of a Blanket Purchase Order (BPO) utilizing Charter County Transit System Sales Surtax funds as part of a multi-department contract, nor a contract utilizing Charter County Transit System Surtax funds shall be effective and thereby give rise to a contractual relationship with the County for purchases unless and until both the following have occurred: 1) the County Commission awards the contract, and such award becomes final (either by expiration of 10 days after such award without veto by the Mayor, or by Commission override of a veto); and, 2) either, i) the Citizens' Independent Transportation Trust (CITT) has approved inclusion of the Surtax funding on the contract, or, ii) in response to the CITT's disapproval, the County Commission reaffirms award of the contract by two-thirds (2/3) vote of the Commission's membership and such reaffirmation becomes final. Notwithstanding the other provisions of Section 1.30, award of an allocation for services in support of the CITT's oversight which does not exceed $1000 will not require Commission or CITT approval and may be awarded by the Executive Director of the OCITT.

1.33. LOBBYIST CONTINGENCY FEES

In accordance with Section 2-11.1(s) of the Code of Miami-Dade County, after May, 16, 2003, no person may, in whole or in part, pay, give or agree to pay or give a contingency fee to another person. No person may, in whole or in part, receive or agree to receive a contingency fee.

A contingency fee is a fee, bonus, commission or non-monetary benefit as compensation which is dependent on or in any way contingent upon the passage, defeat, or modification of: 1) any ordinance, resolution, action or decision of the County Commission; 2) any action, decision or recommendation of the County Mayor or any County board or committee; or 3) any action, decision or recommendation of any County personnel during the time period of the entire decision-making process regarding such action, decision or recommendation which foreseeably will be heard or reviewed by the County Commission or a County board or committee.

1.34. COMMISSION AUDITOR – ACCESS TO RECORDS

Pursuant to Ordinance No. 03-2, all vendors receiving an award of the contract resulting from this solicitation will grant access to the Commission Auditor to all financial and performance related records, property, and equipment purchased in whole or in part with government funds.

The County reserves the right to require the successful Bidder (s) to submit to an audit by Audit and Management Services, the Commission Auditor, or other auditor of the County's choosing at the Bidder's expense. The Bidder shall provide access to all of its records, which relate directly or indirectly to this Agreement at its place of business during regular business hours. The Bidder shall retain all records pertaining to this Agreement and upon request make them available to the County for three years following expiration of the Agreement. The Bidder agrees to provide such assistance as may be necessary to facilitate the review or audit by the County to ensure compliance with applicable accounting and financial standards.

1.35. INVOICES

The successful Bidder shall invoice the County, as specified in this Solicitation. The invoice date shall not exceed thirty (30) calendar days from the delivery of the items or the provision of services, unless otherwise noted in the Contract. Under no circumstances shall the invoice be submitted to the County in advance of the delivery and acceptance of the items or provision of and acceptance of the services. Failure to submit invoices in the prescribed manner will delay payment.

All invoices shall contain the following information:

I. Successful Bidder 's Information:
- Name of the successful Bidder as specified on the contract Award Sheet issued by the County.
- Date of invoice
- Unique Invoice number
- Successful Bidder's Federal Identification Number on file with the County and the State of Florida.

II. County Information:
- County Release Purchase Order

III. Pricing Information:
- Unit price of the goods and/or services provided
- Extended total price of the goods and/or services provided
- Applicable discounts

IV. Goods or Services Provided:
- Description
- Quantity

V. Delivery Information:
- Delivery terms set forth within the County Release Purchase Order
- Reference (or include a copy of) the corresponding delivery ticket number or packing slip number that was signed by an authorized representative of the County at the time the items were delivered and accepted
- Location and date of delivery of goods and/or services being provided.

1.36. COUNTY USER ACCESS PROGRAM (UAP)

A. User Access Fee

Pursuant to Section 2-8.10 of the Miami-Dade County Code, this Contract is subject to a user access fee under the County User Access Program (UAP) in the amount of two percent (2%). All sales resulting from this Contract, or any contract resulting from the solicitation referenced on the first page of this Contract, and the utilization of the County Contract price and the terms and conditions identified herein, are subject to the two percent (2%) UAP. This fee applies to all Contract usage whether by County Departments or by any other governmental, quasi-governmental or not-for-profit entity.

The Bidder providing goods or services under this Contract shall invoice the Contract price and shall accept as payment thereof the Contract price less the 2% UAP as full and complete payment for the goods and/or services specified on the invoice. The County shall retain the 2% UAP for use by the County to help defray the cost of the procurement program. Bidder participation in this invoice reduction portion of the UAP is mandatory.

B. Joint Purchase

Only those entities that have been approved by the County for participation in the County's Joint Purchase and Entity Revenue Sharing Agreement are eligible to utilize or receive County Contract pricing and terms and conditions. The County will provide to approved entities a UAP Participant Validation Number. The Bidder must obtain the participation number from the entity prior to filling any order placed pursuant to this Section. Bidder participation in this joint purchase portion of the UAP, however, is voluntary. The Bidder shall notify the ordering entity, in writing, within three (3) business days of receipt of an order, of a decision to decline the order.

For all ordering entities located outside the geographical boundaries of Miami-Dade County, the Bidder shall be entitled to ship goods on an "FOB

Destination, Prepaid and Charged Back" basis. This allowance shall only be made when expressly authorized by a representative of the ordering entity prior to shipping the goods.
The County shall have no liability to the Bidder for the cost of any purchase made by an ordering entity under the UAP and shall not be deemed to be a party thereto. All orders shall be placed directly by the ordering entity with the Bidder and shall be paid by the ordering entity less the 2% UAP.

C. Bidder Compliance
If a successful Bidder fails to comply with this Article 1.35, that Contractor may be considered in default by the County.

1.37. DEMONSTRATION OF EQUIPMENT MAY BE REQUIRED DURING EVALUATION
After receipt of offers by the County, Bidders may be required to demonstrate specifically offered equipment to County personnel, at no additional cost. The purpose of this demonstration is to observe the equipment in an operational environment and to verify its capability, suitability, and adaptability in conjunction with the performance requirements stipulated in this Solicitation.
If a demonstration is required, the County will notify the Bidder of such in writing and will specify the date, time and location of the demonstration. If the Bidder fails to perform the demonstration on the specified date stipulated in the notice, the County may elect to reject that Bidder's offer, or to reschedule the demonstration, whichever action is determined to be in the best interest of the County. The County shall be the sole judge of the acceptability of the equipment in conformance with the specifications and its decision shall be final.
The equipment used for the demonstration shall be the same as the manufacturer's model identified in the Bidder's offer. Accordingly, the equipment used in the demonstration shall create an express warranty that the actual equipment to be provided by the Bidder during the Contract shall conform to the equipment used in the demonstration. The Bidder shall provide adequate restitution to the County, in the manner prescribed by the County, if this warranty is violated during the term of the Contract.

1.38. EQUIPMENT SHALL BE MOST RECENT MODEL AVAILABLE
The equipment being offered by the successful Bidder shall be the most recent model available. Any optional components which are required in accordance with the specifications herein shall be considered standard equipment for the purposes of this Solicitation. Demonstrator models will not be accepted. Omission of any essential detail from the specifications herein does not relieve the Bidder from furnishing a complete unit. The equipment shall conform to all applicable federal (including OSHA), State, and local safety requirements. All components (whether primary or ancillary) of the delivered equipment shall be in accordance with current Society of Automotive Engineering (SAE) standards and recommended practices, as applicable.
The engineering, materials, and workmanship associated with the successful Bidder's performance hereunder shall exhibit a high-level of quality and appearance consistent with or exceeding industry standards.

1.39. PATENTS AND ROYALTIES
The successful Bidder, without exception, shall indemnify and hold harmless the County and its employees from liability of any nature or kind, including cost and expenses for, or as a result of, any copyrighted, patented, or unpatented invention, process, or article manufactured by the vendor. The successful Bidder has no liability when such claim is solely and exclusively due to the combination, operation, or use of any article supplied hereunder with equipment or data not supplied by successful Bidder, or is based solely and exclusively upon the County's alteration of the article. The purchaser will provide prompt written notification of a claim of copyright or patent infringement.
Further, if such a claim is made or is pending, the successful Bidder may, at its option and expense, procure for the purchaser the right to continue use of, replace or modify the article to render it non-infringing. (If none of the alternatives are reasonably available, the County agrees to return the article on request to the successful Bidder and receive reimbursement, if any, as may be determined by a court of competent
jurisdiction). If the successful Bidder uses any design, device, or materials covered by letters, patent or copyright, it is mutually agreed and understood without exception that the contract prices shall include all royalties or cost arising from the use of such design, device, or materials in any way involved in the work.

1.40. TOXIC SUBSTANCES/FEDERAL "RIGHT TO KNOW" REGULATIONS
The Federal "Right to Know" Regulation implemented by the Occupational Safety and Health Administration (OSHA) requires employers to inform their employees of any toxic substances which they may be exposed to in the workplace, and to provide training in safe handling practices and emergency procedures. It also requires notification to local fire departments of the location and characteristics of all toxic substances regularly present in the workplace.
Accordingly, the successful Bidder performing under the Contract shall provide two (2) complete sets of Material Safety Data Sheets to each User Department utilizing the awarded products. This information should be provided at the time when the initial delivery is made, on a department by department basis.
For additional information on the Federal Right to Know Regulation, contact OSHA at https://www.osha.gov/.

1. 41. GOVERNING LAW
This Contract, including appendices, and all matters relating to this Contract (whether in contract, statute, tort (such as negligence), or otherwise) shall be governed by, and construed in accordance with, the laws of the State of Florida. Venue shall be Miami-Dade County.

1.42. BANKRUPTCY
The County reserves the right to terminate this contract, if, during the term of any contract the Contractor has with the County, the Contractor becomes involved as a debtor in a bankruptcy proceeding, or becomes involved in a reorganization, dissolution, or liquidation proceeding, or if a trustee or receiver is appointed over all or a substantial portion of the property of the Contractor under federal bankruptcy law or any state insolvency law.

1.43. SURVIVAL
The parties acknowledge that any of the obligations in this Agreement will survive the term, termination and cancellation hereof. Accordingly, the respective obligations of the Contractor and the County under this Agreement, which by nature would continue beyond the termination, cancellation or expiration thereof, shall survive termination, cancellation or expiration hereof.

1.44. SMALL BUSINESS ENTERPRISES (SBE) MEASURES
A Small Business Enterprise (SBE)-Micro Tier 1 is a business entity certified by the Small Business Development (SBD) Division, providing goods or services, which has an actual place of business in Miami-Dade County and whose three-year average gross revenues does not exceed $750K ($750,000); an SBE-Micro Tier 2 is a business entity certified by the SBD Division, providing goods or services, which has an actual place of business in Miami-Dade County and whose three-year average gross revenues does not exceed $2 million ($2,000,000), or a manufacturer with fifty (50) employees or less (goods only), or a wholesaler with fifteen (15) employees or less (goods only) , without regard to gross revenues; an SBE-Tier 3 is a business entity certified by SBD, providing goods or services, which has an actual place of business in Miami-Dade County and whose three-year average gross revenues does not exceed five million dollars ($5,000,000), or a manufacturer with one hundred (100) employees or less (goods only) or wholesaler with fifty (50) employees or less (goods only), without regard to gross revenues.

SECTION 1
GENERAL TERMS AND CONDITIONS

An SBE measure applies to this solicitation as follows and as otherwise stipulated in Sections 2-8.1.1.1.1 and 2-8.1.1.1.2 of the Code of Miami-Dade County.

SET-ASIDES

For contracts set-aside for SBE participation governed as follows:
Set-Aside SBE-Micro Tier 1: Only firms certified as a SBE-Micro Tier 1 by SBD are eligible for participation.
Set-Aside SBE-Micro Tier 2: Firms certified as a SBE-Micro Tier1 and Tier 2 by SBD are eligible for participation. Additionally, a bid preference of ten (10) percent shall apply for SBE-Tier 1 firms.
Set-Aside SBE- Tier 3: Firms certified as a SBE-Micro Tier1, SBE-MicroTier 2 and SBE-Tier 3 by SBD are eligible for participation. Additionally, a bid preference of ten (10) percent shall apply for SBE-Tier 1 firms and a bid preference of five (5) percent shall apply for SBE-Tier 2 firms.
The preference shall be used only to evaluate a bid and shall not affect the contract price.

BID PREFERENCE

For awards valued up to $100,000 and not set-aside for SBEs, a ten (10) percent bid preference shall automatically apply for SBE-Micro Tiers 1 and 2 certified firms and a five (5) percent preference shall automatically apply for SBE-Tier 3 certified firms. The preference shall be used only to evaluate a bid and shall not affect the contract price.

For awards valued over $100,000 and up to $1,000,000, the preference shall be ten (10) percent of the price bid for all SBEs and joint ventures with at least one SBE firm. The preference accorded on awards greater than $1 million shall be 5% of the price bid for SBEs and joint ventures with at least one SBE firm. The preference shall be used only to evaluate a bid and shall not affect the contract price.

SBEs must be certified by SBD, a division of the Internal Services Department, for the type of goods and/or services the enterprise provides.

For certification information, contact SBD at 305-375-CERT (2378) or online at: http://www.miamidade.gov/smallbusiness/certification-programs.asp. The enterprises must be certified by bid submission deadline, at contract award, and for the duration of the contract to remain eligible for the preference.

1.45. LOCAL CERTIFIED VETERAN'S BUSINESS ENTERPRISE PREFERENCE

This Solicitation includes a preference for Miami-Dade County Local Certified Veteran Business Enterprises (VBE) in accordance with Section 2-8.5.1 of the Code of Miami-Dade County. "Local Certified Veteran Business Enterprise" is a firm that is (a) a local business pursuant to Section 2-8.5 of the Code of Miami-Dade County and (b) prior to proposal or bid submittal is certified by the State of Florida Department of Management Services as a veteran business enterprise pursuant to Section 295.187 of the Florida Statutes. A Local Certified Veteran Business Enterprise that submits a bid for a contract shall receive a bid preference of five percent of the bid price. These preferences will only be used for evaluating and awarding the bids and shall not affect the contract price. However, if a Local Certified Veteran Business Enterprise is the lowest bidder as a result of a Best and Final Bid (also known as a BAFO), then the price submitted as part of the Best and Final Bid shall be the contract price.
At the time of bid or proposal submission, the firm must affirm in writing its compliance with the certification requirements of Section 295.187 of the Florida Statutes and submit this affirmation and a copy of the actual certification along with the solicitation submittal form.

1.46. SPECIAL SECURITY REQUIREMENTS AT CERTAIN MIAMI-DADE COUNTY DEPARTMENTS

Miami-Dade Aviation (MDAD), Water and Sewer (WASD), Transportation and Public Works (DTPW) and Seaport (PortMiami) Departments operate under strict security regulations. These regulations involve the issuance of special identification (ID) cards.

Vendors performing services at MDAD must follow all required security procedures. This will include security checks and passes for all employees, a special driving course for those who operate a vehicle on the aircraft operating area (AOA), additional badges to work within the US Customs service area and may include bonding for a Customs I.D.

For Customs ID, call 305-345-6528 or email miamiairportsecurityoffice@cbp.dhs.gov for information. For MDAD ID, call 305-876-7188 for appointment and to pick-up package. Vendors are responsible for all costs incurred in obtaining security badges. Security clearance must be obtained prior to start of contract.

Complete police background checks of individuals who are employed, hired or who are required to enter the restricted areas of the PortMiami and WASD frequently (more than 5 times within a 90-day period). These ID cards are required for access and are issued by the departments at the current cost of $60.00 per applicant per year. Therefore, the vendor shall obtain and pay for ID cards for each of his /her employees and/or agents who will be frequently visiting or performing services in restricted areas.

For more information concerning PortMiami ID cards, you may contact the PortMiami ID Office at (305) 347-4955.

For more information concerning WASD ID cards, contact the WASD security at (786) 552-8271.

For the Department of Transportation and Public Works, all bidders and their employees are required to have at all times a current ID card issued by Transit while working on Transit property. For information as to the requirements in obtaining the ID card, contact the Office of Safety and Security by calling 305-375-4240. Additional Security Clearance may be required during the contract term as may be mandated by County ordinance, local, state, federal law or department policy. Bidders will be charged a minimal fee for the badging requirement.

1.47. FIRST SOURCE HIRING REFERRAL PROGRAM ("FSHRP")

Pursuant to Section 2-2113 of the Code of Miami-Dade County, for all contracts for goods and services, the successful Bidder, prior to hiring to fill each vacancy arising under a County contract shall (1) first notify the South Florida Workforce Investment Board ("SFWIB"), the designated Referral Agency, of the vacancy and list the vacancy with SFWIB according to the Code, and (2) make good faith efforts as determined by the County to fill a minimum of fifty percent (50%) of its employment needs under the County contract through the SFWIB. If no suitable candidates can be employed after a Referral Period of three to five days, the successful Bidder is free to fill its vacancies from other sources. Successful Bidders will be required to provide quarterly reports to the SFWIB indicating the name and number of employees hired in the previous quarter, or why referred candidates were rejected. Sanctions for non-compliance shall include, but not be limited to: (i) suspension of contract until Contractor performs obligations, if appropriate; (ii) default and/or termination; and (iii) payment of $1,500/employee, or the value of the wages that would have been earned given the noncompliance, whichever is less. Registration procedures and additional information regarding the FSHRP are available at https://iapps.southfloridaworkforce.com/firstsource/.

1.48. NONDISCRIMINATION

During the performance of this Contract, Contractor agrees to not discriminate against any employee or applicant for employment because of race, color, religion, ancestry, national origin, sex, pregnancy, age, disability, marital status, familial status, sexual orientation, gender identity or gender expression, status as victim of domestic violence, dating violence or stalking, or veteran status, and on housing related contracts the source of income, and

will take affirmative action to ensure that employees and applicants are afforded equal employment opportunities without discrimination. Such action shall be taken with reference to, but not limited to: recruitment, employment, termination, rates of pay or other forms of compensation, and selection for training or retraining, including apprenticeship and on the job training.

By entering into this Contract, the Contractor attests that it is not in violation of the Americans with Disabilities Act of 1990 (and related Acts) or Miami-Dade County Resolution No. R-385-95. If the Contractor or any owner, subsidiary or other firm affiliated with or related to the Contractor is found by the responsible enforcement agency or the County to be in violation of the Act or the Resolution, such violation shall render this Contract void. This Contract shall be void if the Contractor submits a false affidavit pursuant to this Resolution or the Contractor violates the Act or the Resolution during the term of this Contract, even if the Contractor was not in violation at the time it submitted its affidavit.

1.49. PUBLIC RECORDS AND CONTRACTS FOR SERVICES PERFORMED ON BEHALF OF MIAMI-DADE COUNTY

The Contractor shall comply with the Public Records Laws of the State of Florida, including but not limited to,: (1) keeping and maintaining all public records that ordinarily and necessarily would be required by Miami-Dade County (County) in order to perform the service; (2) providing the public with access to public records on the same terms and conditions that the County would provide the records and at a cost that does not exceed the cost provided in Chapter 119, F.S., or as otherwise provided by law; (3) ensuring that public records that are exempt or confidential and exempt from public records disclosure requirements are not disclosed except as authorized by law; and (4) meeting all requirements for retaining public records and transferring, at no cost, to the County all public records in possession of the Contractor upon termination of the contract and destroying any duplicate public records that are exempt or confidential and exempt from public records disclosure requirements upon such transfer. In addition, all records stored electronically must be provided to the County in a format that is compatible with the information technology systems of the County. Failure to meet any of these provisions or to comply with Florida's Public Records Laws as applicable shall be a material breach of the agreement and shall be enforced in accordance with the terms of the agreement.

IF THE CONTRACTOR HAS QUESTIONS REGARDING THE APPLICATION OF CHAPTER 119, FLORIDA STATUTES, TO THE CONTRACTOR'S DUTY TO PROVIDE PUBLIC RECORDS RELATING TO THIS CONTRACT, CONTACT THE CUSTODIAN OF PUBLIC RECORDS AT (305) 375-5773; ISD-VSS@MIAMIDADE.GOV; 111 NW 1 STREET, SUITE 1300, MIAMI, FLORIDA 33128

1.50 ASPIRATIONAL POLICY REGARDING DIVERSITY

Pursuant to Resolution No. R-1106-15 Miami-Dade County vendors are encouraged to utilize a diverse workforce that is reflective of the racial, gender and ethnic diversity of Miami-Dade County and employ locally-based small firms and employees from the communities where work is being performed in their performance of work for the County. This policy shall not be a condition of contracting with the County, nor will it be a factor in the evaluation of solicitations unless permitted by law.

1.51 PROHIBITION ON POLYSTYRENE ARTICLES IN MIAMI-DADE COUNTY PARKS

Pursuant to Rule 36 of Chapter 26 of the Code of Miami-Dade County, Parks, Recreation and Open Spaces Department Contractors (Parks Contractors) shall not sell, use, provide food in, or offer the use of Polystyrene articles, also known as Styrofoam, on park property or facilities located within Miami-Dade County Parks. This rule is applicable to a contractor, vendor, lessee, licensee, programming partner, or permittee of the County that uses, works on, provides services at, or undertakes construction of a park property; a special events permittee for an event in a park; or an operator or manager of a park property or a facility within a park. This rule shall not apply to Polystyrene articles that are used for prepackaged food that have been filled and sealed prior to receipt by the Parks Contractor. A violation of this rule shall be deemed a default under the terms of the applicable contract between the County and the Parks Contractor.

Solicitation RTQ-00662

DEWATERING & TANK CLEANING SERVICES PRE-QUALIFICATION

Solicitation Designation: Public

Miami-Dade County

Solicitation RTQ-00662
DEWATERING & TANK CLEANING SERVICES PRE-QUALIFICATION

Solicitation Number	RTQ-00662
Solicitation Title	DEWATERING & TANK CLEANING SERVICES PRE-QUALIFICATION
Solicitation Start Date	Mar 1, 2018 3:00:08 PM EST
Solicitation End Date	Mar 19, 2018 6:00:00 PM EDT
Question & Answer End Date	Mar 7, 2018 3:00:00 PM EST
Solicitation Contact	Lashonne Williams-Canty Procurement Contracting Officer 1 ISD - Procurement Management Services 305-375-5650 Lashonne.Williams-Canty@miamidade.gov
Solicitation Contact	Fredrick Taylor Procurement Contracting Manager ISD - PMS 305-375-1078 taylorf@miamidade.gov
Solicitation Contact	Shereece George Procurement Contracting Officer 1 ISD, Procurement Management services 305-375-3421 Sgeorge@miamidade.gov
Contract Duration	**See Bid Documents**
Contract Renewal	See Bid Documents
Prices Good for	**See Bid Documents**
Solicitation Comments	**This Request to Qualify (RTQ) will establish a Prequalified Vendors List (List) that will be used to solicit dewatering and/or tank cleaning services for Miami-Dade County (County).** **Added on Mar 9, 2018:** **Please see attached Addendum 1** **Added on Mar 13, 2018:** **See ADDENDUM NO. 2**

Addendum # 1

New Documents	**Addendum 1_RTQ-00662 Dewatering.pdf**

Addendum # 2

New Documents	**Addendum 2_RTQ-00662 Dewatering.pdf**		
Previous End Date	Mar 14, 2018 6:00:00 PM EDT	New End Date	Mar 19, 2018 6:00:00 PM EDT

Item Response Form

Item RTQ-**00662--01-01** - Meets Qualifications

Quantity **2 See Bid Documents**

Prices are not requested for this item.

Delivery Location **Miami-Dade County**

Miami-Dade County Information Technology Department (ITD)	Miami-Dade County
5680 SW 87th Avenue	111 NW 1st Street
Miami FL 33173	Suite 1300
Qty 1	Miami FL 33128
	Qty 1

Description

Awarded Vendor shall provide dewatering and/or tank cleaning services for Miami-Dade County on an as needed basis using an approved suitable method.

SOLICITATION NO.: RTQ-00662

DEWATERING & TANK CLEANING SERVICES PRE-QUALIFICATION
Mar 19, 2018

MIAMI-DADE COUNTY, FLORIDA

R E Q U E S T T O Q U A L I F Y

TITLE:
DEWATERING & TANK CLEANING SERVICES PRE-QUALIFICATION

FOR INFORMATION CONTACT:
Lashonne Williams-Canty , 305-375-5650, Lashonne.Williams-Canty@miamidade.gov

IMPORTANT NOTICE TO BIDDERS/PROPOSERS:

- **READ THE ENTIRE SOLICITATION DOCUMENT, THE GENERAL TERMS AND CONDITIONS, AND HANDLE ALL QUESTIONS IN ACCORDANCE WITH THE TERMS OUTLINED IN PARAGRAPH 1.2(D) OF THE GENERAL TERMS AND CONDITIONS.**
- **THE SOLICITATION SUBMITTAL FORM CONTAINS IMPORTANT INFORMATION THAT REQUIRES REVIEW AND COMPLETION BY ANY BIDDER/PROPOSER RESPONDING TO THIS SOLICITATION.**
- **FAILURE TO COMPLETE AND SIGN THE SOLICITATION SUBMITTAL FORM WILL RENDER YOUR PROPOSAL NON-RESPONSIVE.**

SECTION 1

GENERAL TERMS AND CONDITIONS:

All general terms and conditions of Miami-Dade County Procurement Contracts are posted online. Bidders/Proposers that receive an award from Miami-Dade County through Miami-Dade County's competitive procurement process must anticipate the inclusion of these requirements in the resultant Contract. These general terms and conditions are considered non-negotiable.

All applicable terms and conditions pertaining to this solicitation and resultant contract may be viewed online at the Miami-Dade County Procurement Management website by clicking on the below link:

http://www.miamidade.gov/procurement/library/boilerplate/general-terms-and-conditions-r17-1.pdf

---

NOTICE TO ALL BIDDERS/PROPOSERS:

Electronic bids are to be submitted through a secure mailbox at BidSync (www.bidsync.com) until the date and time as indicated in this Solicitation document. It is the sole responsibility of the Bidder/Proposer to ensure their proposal reaches BidSync before the Solicitation closing date and time. There is no cost to the Bidder/Proposer to submit a proposal in response to a Miami-Dade County solicitation via BidSync. Electronic proposal submissions may require the uploading of electronic attachments. The submission of attachments containing embedded documents or proprietary file extensions is prohibited. All documents should be attached as separate files.

For information concerning technical specifications please utilize the question/answer feature provided by BidSync at www.bidsync.com within the solicitation. Questions of a material nature must be received prior to the cut-off date specified in the solicitation. Material changes, if any, to the solicitation terms, scope of services, or bidding procedures will only be transmitted by written addendum. (See addendum section of BidSync site).

Please allow sufficient time to complete the online forms and upload of all proposal documents. Bidders/Proposers should not wait until the last minute to submit a proposal. The deadline for submitting information and documents will end at the closing time indicated in the solicitation. All information and documents must be fully entered, uploaded, acknowledged (Confirm) and recorded into BidSync before the closing time or the system will stop the process and the response will be considered late and will not be accepted.

PLEASE NOTE THE FOLLOWING:

No part of your proposal can be submitted via **HARDCOPY, EMAIL, OR FAX**. No variation in price or conditions shall be permitted based upon a claim of ignorance. Submission of a proposal will be considered evidence that the Bidder/Proposer has familiarized themselves with the nature and extent of the work, and the equipment, materials, and labor required. The entire proposal response must be submitted in accordance with all specifications contained in the solicitation electronically.

ADDENDUM NO. 2

DATE: March 13, 2018

TO: ALL PROSPECTIVE BIDDERS

SUBJECT: SOLICITATION NO. RTQ-00662

TITLE: DEWATERING & TANK CLEANING SERVICES PRE-QUALIFICATION

This Addendum is and does become part of the above mentioned solicitation.

A. CHANGES TO SOLICITATION

The following corrections, additions, deletions, and/or modifications to the aforementioned solicitation, by this reference, shall be incorporated therein:

- Submittal Responses Due: Monday, March 19, 2018 at 6:00 PM (EST)

All terms, covenants and conditions of the subject solicitation and any addenda issued thereto shall apply, except to the extent herein amended.

Miami-Dade County

Lashonne Williams-Canty
Procurement Contracting Officer

c: Clerk of the Board

ADDENDUM NO. 1

DATE: March 9, 2018

TO: ALL PROSPECTIVE BIDDERS

SUBJECT: SOLICITATION NO. RTQ-00662

TITLE: DEWATERING & TANK CLEANING SERVICES PRE-QUALIFICATION

This Addendum is and does become part of the above mentioned solicitation.

A. CHANGES TO SOLICITATION

The following corrections, additions, deletions, and/or modifications to the aforementioned solicitation, by this reference, shall be incorporated therein:

TERM

This List shall be established on the first calendar day of the month succeeding approval by the Board of County Commissioners, or designee, unless otherwise stipulated in the Blanket Purchase Order issued by the Internal Services Department, Procurement Management Services Division. The List shall expire on the last day of the 60th month.

B. QUESTIONS AND ANSWERS

Question 1. The information to be provided in Section 4 - Bid Submittal does not appear to have a form or boxes online to fill out. Is this form to be filled out offline and then uploaded to the Bidsync system? We do not see where to upload additional documents and would like to ask how this section is expected to be completed and provided to Miami Dade?

Answer 1. Please print the Section 4 to complete required data, and upload back in to Bidsync. If you are having trouble uploading into Bidsync, please call 1-800-990-9339 for assistance.

Question 2. In Section 4 - Bid Submittal, Item 2.3.f appears to be asking for licensing and permits for OSHA for transportation and we have no knowledge of OSHA licensing for transportation. Would the question be referencing other agencies such as DOT for transportation licenses?

Answer 2. Item 2.3.f. should only be completed is applicable, it is the Vendor's responsibility to dispose of all material and waste. Miami –Dade County is not liable for any fines or fees that may be required to dispose of such materials. Initials are required in this section to attest your response.

Question 3. For the Contractor Due Diligence Affidavit there is a section that requires a notary public signature. There is a portion of the Affidavit that has boxes to be filled out online, but the notary public section does not. Please explain how this information is expected to be provided?

Answer 3. The Contractor Due Diligence Affidavit should be filled in online and printed, once the Affidavit has been notarized, please upload with your submittal.

Question 4. Reviewing the Affidavit – Subcontractor Listing Form, is this required at this stage of qualification? Without all the information for the Scope of Work it would be difficult determine the specific subcontractor and/or suppliers we may be using at this time. We would request this be removed from for this pre-qualification stage and used at the pricing proposal stage for this project as we feel we will have a better understanding of the subcontractors and supplies we plan to hire.

Answer 4. The Subcontractor Listing Affidavit is required at the time of your submittal and cannot be removed. The Scope of Work is stated however specifics to the Scope of Work will be provided at the time of the Invitation to Quote to all Vendors placed on the Pre-Qualified Vendor List. Use the form to disclose any and all Subcontractors who perform the duties stated in Section 3.

All terms, covenants and conditions of the subject solicitation and any addenda issued thereto shall apply, except to the extent herein amended.

Miami-Dade County

Lashonne Williams-Canty
Procurement Contracting Officer

c: Clerk of the Board

SECTION 2 – SPECIAL TERMS AND CONDITIONS

2.0 PURPOSE

This Request to Qualify (RTQ) will establish a Prequalified Vendors List (List) that will be used to solicit dewatering and/or tank cleaning services for Miami-Dade County (County). Placement on the List is **not** a contract between the County and the Vendor, but an acknowledgement that the Vendor meets the qualifications as outlined throughout this RTQ. Vendor Submittals will continue to be accepted throughout the term of the RTQ for placement on such List.

2.1 DEFINITIONS

Invitation to Quote (ITQ) – Shall refer to the solicitation of quotes from the List of Prequalified Vendors for a specific goods and/or service; and awarded based on lowest price, or other quantifiable criteria.

Prequalified Vendors List (List) – Shall refer to business entities/individuals determined by the County's Internal Services Department, Procurement Management Services Division, as meeting the minimum standards of business competence, financial ability, and/or product quality for placement on the Prequalified Vendors List, and who may submit quotes/proposals, at the time of need.

Vendor – Shall refer to a business entity/individual responding to this RTQ.

Awarded Vendor – Shall refer to a business entity/individual recommended for award as a result of the evaluation of proposals in response to an ITQ.

Submittal - Shall refer to the forms submitted in response to this RTQ.

2.2 TERM

This List shall be established on the first calendar day of the month succeeding approval by the Board of County Commissioners, or designee, unless otherwise stipulated in the Blanket Purchase Order issued by the Internal Services Department, Procurement Management Services Division. The List shall expire on the last day of the 24 month.

2.3 QUALIFICATION CRITERIA

Vendors shall meet the following criteria to be considered for placement on the List and for participation in future competitions:

A. Vendor shall name and describe the method(s) their firm intends to use to dewater and/or clean the tanks. The County reserves the right to require a demonstration to test the proposed method(s). If the vendor intends to offer more than one method, each must be detailed in the proposal submittal page.

B. Vendor shall be regularly engaged in the business of providing dewatering and/or tank cleaning services. Vendors must provide a minimum of three (3) projects within the past five (5) years completed as evidence the Vendor meets this requirement. Vendor must provide this information for each proposed method if applicable.

C. Provide three (3) references who can confirm that the Vendor has completed projects for each of the proposed methods. References provided must include the company name, the contact name and email

address, title, physical address, telephone number, and the method of dewatering utilized. Provide safety/incident status during project completion. These references shall ascertain to the County's satisfaction that the Vendor has sufficient expertise in the methods being proposed.

D. Vendor shall employ a superintendent with a minimum of five (5) years' experience in dewatering and tank cleaning services in the method being proposed. Vendor shall provide the superintendent's contact information and a resume with its submittal.

E. Vendor shall provide Safety Data Sheets including safety statistics or records indicating categories of accidents and their incidence or frequency rates for the past five years. Provide a list of applicable OSHA trainings conducted or attended including completion dates for each superintendent provided. List any additional training such as Confined Space, Trench Safety, etc.

F. Vendor shall provide any licenses and/or permits that may be required for the transportation of disposal material adhering to OSHA standards.

Vendors shall provide all of the specified information, documents and attachments listed above with their Submittal as proof of compliance with the requirements of this RTQ. However, the County may at its sole discretion and in its best interest, allow Vendors to complete, supplement or supply the required documents throughout the term of the RTQ. It shall be the sole right of the County to determine the number of Vendors who will be included in the List. During the term of the RTQ, the County reserves the right to add or delete Vendors as it deems necessary and in its best interest.

2.4 SMALL BUSINESS CONTRACT MEASURES

Section 1 from the General Terms and Conditions, Paragraph 1.44 - Small Business Enterprises (SBE) Measures, is exempt from this RTQ. The application of measures will be determined at the time the Invitation to Quote (ITQ) is issued and may include but not be limited to, a trade set-aside, a goal, proposed preference or other measures. All individual ITQ's will be reviewed by the Small Business Development Division for applicable measures prior to advertising.

2.5 SPOT MARKET QUOTES

Vendor(s) on the List will be invited to participate in spot market competitions, as needed. The spot market competitions will be in the form of an ITQ that will include the specific goods and/or services required, and may include provisions, as applicable, such as:

- Small Business Enterprise Measures
- Warranty Requirements
- Liquidated Damages

For certain funded programs, additional provisions may apply in accordance with the funding source. The following provisions from Section 1, General Terms and Conditions may be exempted from such solicitations, as indicated in the ITQ.

- Local Preferences
- User Access Program (UAP) Fee
- Small Business Enterprises (SBE) Measure
- Local Certified Service-Disabled Veteran's Business Enterprise Preference

- First Source Hiring Referral Program
- Prompt Payment Terms
- Office of Inspector General (Fee)

2.6 INDEMNIFICATION AND INSURANCE

Vendor shall indemnify and hold harmless the County and its officers, employees, agents and instrumentalities from any and all liability, losses or damages, including attorneys' fees and costs of defense, which the County or its officers, employees, agents or instrumentalities may incur as a result of claims, demands, suits, causes of actions or proceedings of any kind or nature arising out of, relating to or resulting from the performance of this Agreement by the Vendor or its employees, agents, servants, partners principals or sub-vendors. Vendor shall pay all claims and losses in connection therewith and shall investigate and defend all claims, suits or actions of any kind or nature in the name of the County, where applicable, including appellate proceedings, and shall pay all costs, judgments, and attorney's fees which may issue thereon. Vendor expressly understands and agrees that any insurance protection required by this Agreement or otherwise provided by Vendor shall in no way limit the responsibility to indemnify, keep and save harmless and defend the County or its officers, employees, agents and instrumentalities as herein provided.

The Vendor shall furnish to Internal Services Department/Procurement Management Services, 111 NW 1st Street, Suite 1300, Miami, Florida 33128-1989, Certificate(s) of Insurance which indicate that insurance coverage has been obtained which meets the requirements as outlined below:

A. Worker's Compensation Insurance for all employees of the Vendor as required by Florida Statute 440.

B. Commercial General Liability Insurance in an amount not less than $1,000,000 combined single limit per occurrence for bodily injury and property damage. **Miami-Dade County must be shown as an additional insured with respect to this coverage.**

C. Automobile Liability Insurance covering all owned, non-owned and hired vehicles used in connection with the work, in an amount not less than $1,000,000 combined single limit per occurrence for bodily injury and property damage.

All insurance policies required above shall be issued by companies authorized to do business under the laws of the State of Florida, with the following qualifications:

The company must be rated no less than "A-" as to management, and no less than "Class VII" as to financial strength by Best's Insurance Guide, published by A.M. Best Company, Oldwick, New Jersey, or its equivalent, subject to the approval of the County Risk Management Division.

or

The company must hold a valid Florida Certificate of Authority as shown in the latest "List of All Insurance Companies Authorized or Approved to Do Business in Florida" issued by the State of Florida Department of Financial Services.

CERTIFICATE HOLDER MUST READ: **MIAMI-DADE COUNTY**
111 NW 1st STREET
SUITE 2340
MIAMI, FL 33128

2.7 SUBCONTRACTORS

The Vendor is fully responsible for all work performed under this solicitation. As part of its submittal, the Vendor is required to identify any and all subcontractors that will be used in the performance of the awarded ITQ, their capabilities and experience, and the portion of the work to be done by the subcontractor. If the Vendor fails to identify any and all sub-contractors in the submittal, the vendor may be allowed to submit this documentation to the County during the proposed evaluation period if such action is in the best interest of the County.

2.8 ADDITIONAL SERVICES

Although this solicitation and awarded ITQ identifies a specific service to be provided, it is hereby agreed and understood that additional services may be added to this solicitation at the option of the County. When required by the pricing structure of the awarded ITQ, Awarded Vendor(s) under this solicitation shall be invited to submit price quotes for the additional services. If these quotes are determined to be fair and reasonable, then the additional service will be awarded.

SECTION 3 – TECHNICAL SPECIFICATIONS

3.1 SCOPE OF WORK

Awarded Vendor shall provide dewatering and/or tank cleaning services for Miami-Dade County on an as needed basis using an approved suitable method. Services to include but are not limited to wastewater/water plant structures, tanks, trains, clarifiers, contact basins, digesters, headwork, grit chambers, containment units, and other water and wastewater processing systems facilities and structures.

The awarded Vendor shall provide all supervision labor, equipment, material, fuel and other incidentals required perform and complete the Work.

3.2 GENERAL SPECIFICATIONS

1. Service consists of dewatering and tank cleaning services using an approved suitable method. WASD shall be the sole judge of the acceptable method and their decision shall be final. If applicable, vendor will provide the means and methods of dewatering, removal, and disposal with their proposed submission.

2. Awarded Vendor shall remove all grit, screenings, sludge, floatables, and other content to a watertight container or dump truck supplied by the Vendor.

3. Any Work not mentioned in the Scope of Work that is obviously required for a complete, workmanlike job shall be deemed to have been included at no additional cost to the County. The apparent silence of the Scope of Work as to any details, or the apparent omission of a detailed description concerning any Work to be performed or materials to be furnished by the Vendor shall be regarded as meaning that only the best, general practice is to prevail and that only the best material and workmanship is to be used.

4. Any ITQ issued under this solicitation will include project specific scope of services, technical specifications, site conditions (e.g., access, use of existing utilities such as water/electric/restroom availability), and applicable terms and conditions including but not limited to: pre-proposed/site visit, payment requirements such as retainage, time for performance, any submittal requirements including means and methods of dewatering, removal and disposal, volume of discharge flow, safety manual, confined space entry plan, construction schedules, schedule of values and product data, proposed and/or performance bond requirements, liquidated damage provisions, if the work is to be performed at night or on weekends, type of payment (lump sum vs. unit price), as well as any additional requirements.

3.3 MATERIAL AND METHOD OF REMOVAL

1. Material to be removed is composed of sludge, sand and other solid accumulation and is to be dewatered and disposed of offsite in an approved disposal facility. Solids must be transported offsite daily using leak proof trucks to an approved disposal site. No solid material storage will be allowed on site. Material removed must be transported off site daily. Any spills created shall be cleaned up immediately.

2. The accumulated solids, which would be deposited at the bottom of vessels, typically consist of sand and gritty material. The amount of accumulated solids can vary by project; it is typically up to a depth of 4' to 6' feet but can accumulate to 9 feet or more. The material is not regulated as a hazardous waste, but it is considered "contaminated" and as such, its disposal is restricted by various regulations.

3. After removal and disposal of the bulk of the material, the awarded vendor shall be required to clean the vessel's walls, columns and floor of any remaining material by thoroughly pressure washing those surfaces, using a pressure of at least 2,500 psi, and removing the resultant water mixture. The vendor shall use squeegees or similar devices to rid the tank of any standing water.

4. When provided by the ITQ, Vendor will be permitted to discharge liquid back into the plant gravity sewer manholes adjacent to the tank being cleaned. An estimated volume of flow must be presented with the ITQ submission and approved by WASD.

3.4 SAFETY

1. A confined space entry plan must be submitted as part of the ITQ and approved prior to starting work.

2. The use of warning devices such as traffic cones, barricades and warning lights to warn plant personnel of any potential hazard are considered necessary by the County.

3. No smoking or open flame shall be permitted in any areas within the tank or on the roof of the tank or any adjacent tanks. The awarded vendor shall provide suitable explosion proof blowers, as necessary to make up for any lack of ventilation and to provide comfortable working conditions for its personnel.

4. Awarded vendor's personnel will be in the vicinity of raw sewage. The awarded vendor shall check with the Miami Dade County Health Department, and based on their recommendation, have its personnel properly immunized against disease.

5. The awarded vendor will be required to submit a safety manual; outlining the work sequence for review and approval by WASD.

6. The awarded vendor shall coordinate with the Construction Manager to arrange mandatory Project Safety Management (PSM) training for all his personnel who will be onsite. This training must be completed prior to mobilization or any other work on site. The awarded vendor shall also be responsible that all on-site personnel of his subcontractors, at whatever tier, receive this training. Contact information for the Construction Manager will be provided upon award approval.

3.5 PROTECTION OF PROPERTY

All existing structures, utilities, services, road, trees, shrubbery, etc., shall be protected against damage or interrupted services at all times by the awarded vendor during the term of the awarded ITQ; and the awarded vendor shall be held responsible for repairing or replacing property to the satisfaction of the County which is damaged by reason of the awarded vendor's operation on the property.

3.6 SUPERVISION

The awarded vendor shall employ a competent superintendent who shall be in attendance at the project site during the progress of the work. The superintendent shall be the primary representative for the awarded vendor and all communications given to and all decisions made by the superintendent shall be binding to the awarded vendor. Notwithstanding, the superintendent shall be considered to be, at all times, an employee of the awarded vendor under its sole direction and not an employee or agent of Miami-Dade County.

3.7 LOCATIONS

Dewatering and/or Tank Cleaning Services under the awarded ITQ shall be performed at various locations throughout the County.

3.8 RECORD KEEPING

Vendor(s) shall prepare and submit all reports required by all applicable laws, regulations, rules, and permits. The vendor shall deliver to the County, one copy of all applications, permits, reports, records, and correspondence, within 30 calendar days of submission or receipt. Vendor(s) shall also maintain a file of the above items and make this file available for inspection by the County. Vendor shall maintain these files and make them available for inspection for the duration of the awarded ITQ, plus five (5) years.

3.9 COMPLIANCE WITH GOVERNMENT STANDARDS

All services provided shall be in accordance with all governmental standards, to include but not limited to those issued by; the Occupational Safety and Health Administration (OSHA), the National Institute of Occupations Safety Hazards (NIOSH), and the National Fire Protection Association (NFPA). Special attention is made to OSHA's 29CFR 1910 regulations relating to hazardous atmospheres in confined spaces. Vendor(s) shall be responsible for ventilation and Personal Protection Equipment (PPE) per OSHA requirements.

Vendor shall follow all applicable Federal and State Department of Transportation (DOT) regulations. Use or disposal of this material shall either be in accordance with Chapter 62-640 of the Florida Administrative Code F.A.C. and all other applicable laws, permits, and regulations. All disposal, storage, and/or use shall be in compliance with the operating permits for the Wastewater Treatment Plants.

3.10 PERMITS

Vendor shall obtain all permits required by applicable laws, regulations, and rules. Vendor shall prepare and maintain all records required by all applicable laws, regulations, rules and permits. Vendor shall prepare and submit all reports required by all applicable laws, regulations, rules and permits. Vendor shall deliver to Water and Sewer Department (WASD) one copy of all applications, permits, reports, records and correspondence, within 30 calendar days of submission or receipt. Vendor shall also maintain a file of the above items and make this file available for inspection by the County and others authorized by it. Vendor shall maintain these files and make them available for inspection for the duration of the awarded ITQ, plus five (5) years.

3.11 CLEAN-UP

All unusable materials and spills shall be removed by the vendor from the premises immediately, and disposed of in an appropriate manner. Upon final completion, the awarded vendor shall thoroughly clean up all areas where work has been involved as mutually agreed with the associated user department's project manager.

3. Should an awarded Vendor of an Invitation to Quote (ITQ) fail to complete the work within the number of days as stated in its offer, or the timeframe cited in the ITQ, the County may terminate the order, secure the services of another Vendor to complete the work. If such suspension exceeds thirty (30) calendars days, the County may, at its sole discretion, terminate Work for cause and seek reprocurement damages from the bidder.

3.12 STOP WORK ORDER

Any "Stop Work Order" given to the Awarded vendor will cause all physical work to stop and a complete cessation of all expenditures, ordering of materials, etc., on the part of the Awarded Vendor and /or their assignees.

SOLICITATION TITLE: Dewatering & Tank Cleaning Services Pre-Qualification | **SOLICITATION NO.** RTQ-00662

SECTION 4 – BID SUBMITTAL

FIRM NAME: _____

Refer to Paragraph 2.3 to ensure that your firm's responses and attachments comply with the Solicitation's requirements.

	QUALIFICATION CRITERIA
2.3.a	*Vendor shall name and describe the method(s) their firm intends to use to dewater and/or clean the tanks.* Method: _____ Description: _____ _____ _____ Method: _____ Description: _____ _____ _____ Method: _____ Description: _____ _____ _____ Initials: _____
2.3.b	*Vendor must provide a minimum of three (3) projects within the past five (5) years completed as evidence the vendor meets this requirement. Vendor must provide this information for each proposed method if applicable.* Project Title: _____ Dates of Project: _____ Method Used: _____ Project Details: _____ _____ _____
	Project Title: _____ Dates of Project: _____ Method Used: _____ Project Details: _____ _____ _____

SOLICITATION TITLE: Dewatering & Tank Cleaning Services Pre-Qualification | **SOLICITATION NO.** RTQ-00662

	Project Title:_____ Dates of Project: _____ Method Used: _____ Project Details: _____ _____ _____ Initials: _____	
2.3.c	*Provide three (3) References who can confirm that the vendor has completed projects for each of their proposed methods.*	
	Client Reference No. 1	Company Name:_____ Telephone No.: _____ Contact Name: _____ Title:_____ Email Address:_____ Address:_____ Method Used:_____
	Client Reference No. 2	Company Name:_____ Telephone No.: _____ Contact Name: _____ Title:_____ Email Address:_____ Address:_____ Method Used:_____
	Client Reference No. 3	Company Name:_____ Telephone No.: _____ Contact Name: _____ Title:_____ Email Address:_____ Address:_____ Method Used:_____ Initials: _____

MIAMI-DADE COUNTY

2.3.d	*Vendor shall provide the superintendent's contact information and a resume with their proposed submittal. Attach resume(s)*	
	Superintendent Information	Name:_____ Telephone No.:_____ Title:_____ Email Address:_____ Address:_____ Name:_____ Telephone No.:_____ Title:_____ Email Address:_____ Address:_____ Initials: _____
2.3.e	*Vendor shall provide Safety Data Sheets including safety statistics or records indicating categories of accidents and their incidence or frequency rates for the past five years. Provide a list of applicable OSHA trainings conducted or attended including completion dates for each superintendent provided. List any additional training such as Confined Space, Trench Safety, etc.* Initials: _____	
2.3.f	*Vendor shall provide any license and permits that may be required for the transportation of disposal material adhering to OSHA standards. (If applicable)* License _____ License _____ Initials: _____	

Submittal Form

Solicitation No.RTQ-00662	Solicitation Title: DEWATERING & TANK CLEANING SERVICES PRE-QUALIFICATION		
Legal Company Name (include d/b/a if applicable): *	**Federal Tax Identification Number:** *		
If Corporation - Date Incorporated/Organized:	State Incorporated/Organized:		
Company Operating Address: *	City *	State *	Zip Code *
Miami-Dade County Address (if applicable):	City	State	Zip Code
Company Contact Person: *	**Email Address:** *		
Phone Number (include area code):	**Company's Internet Web Address:**		

Pursuant to Miami-Dade County Ordinance 94-34, any individual, corporation, partnership, joint venture or other legal entity having an officer, director, or executive who has been convicted of a felony during the past ten (10) years shall disclose this information prior to entering into a contract with or receiving funding from the County.

☐ Place a check mark here only if the Bidder has such conviction to disclose to comply with this requirement.

LOCAL PREFERENCE CERTIFICATION: For the purpose of this certification, and pursuant to Section 2-8.5 of the Code of Miami-Dade County, a "local business" is a business located within the limits of Miami-Dade County that has a valid Local Business Tax Receipt issued by Miami-Dade County at least one year prior to bid submission; has a physical business address located within the limits of Miami-Dade County from which business is performed and which served as the place of employment for at least three full time employees for the continuous period of one year prior to bid submittal (by exception, if the business is a certified Small Business Enterprise, the local business location must have served as the place of employment for one full time employee); and contributes to the economic development of the community in a verifiable and measurable way. This may include, but not be limited to, the retention and expansion of employment opportunities and the support and increase to the County's tax base.

☐ Place a check mark here only if affirming the Bidder meets the requirements for Local Preference. Failure to complete this certification at this time (by checking the box above) may render the vendor ineligible for Local Preference.

LOCALLY-HEADQUARTERED BUSINESS CERTIFICATION: For the purpose of this certification, and pursuant to Section 2-8.5 of the Code of Miami-Dade County, a "locally-headquartered business" is a Local Business whose "principal place of business" is in Miami-Dade County.

☐ *Place a check mark here only if affirming the Bidder meets requirements for the Locally-Headquartered Preference (LHP). Failure to complete this certification at this time (by checking the box) may render the vendor ineligible for the LHP.*

The address of the Locally-Headquartered office is:

LOCAL CERTIFIED VETERAN BUSINESS ENTERPRISE CERTIFICATION: A Local Certified Veteran Business Enterprise is a firm that is (a) a local business pursuant to Section 2-8.5 of the Code of Miami-Dade County and (b) prior to bid submission is certified by the State of Florida Department of Management Services as a veteran business enterprise pursuant to Section 295.187 of the Florida Statutes.

☐ Place a check mark here only if affirming the Bidder **is a Local Certified Veteran Business Enterprise.** A copy of the certification must be submitted with the bid.

SMALL BUSINESS ENTERPRISE CONTRACT MEASURES (If Applicable)

A Small Business Enterprise (SBE) must be certified by Small Business Development for the type of goods and/or services the Bidder provides in accordance with the applicable Commodity Code(s) for this Solicitation. For certification information contact Small Business Development at (305) 375-3111 or access http://www.miamidade.gov/smallbusiness/certification-programs.asp. The SBE must be certified by the solicitation's submission deadline, at contract award, and for the duration of the contract to remain eligible for the preference. Firms that graduate from the SBE program during the contract may remain on the contract.

Is Bidder'sfirm a Miami-Dade County Certified Small Business Enterprise? Yes ☐ No ☐

If yes, please provide Certification Number:

SCRUTINIZED COMPANIES WITH ACTIVITIES IN SUDAN LIST OR THE SCRUTINIZED COMPANIES WITH ACTIVITIES IN THE IRAN PETROLEUM ENERGY SECTOR LIST:

By executing this bid through a duly authorized representative, the Bidder certifies that the Bidder is not on the Scrutinized Companies with Activities in Sudan List or the Scrutinized Companies with Activities in the Iran Petroleum Energy Sector List, as those terms are used and defined in sections 287.135 and 215.473 of the Florida Statutes. In the event that the Bidder is unable to provide such certification but still seeks to be considered for award of this solicitation, the Bidder shall execute the bid response package through a duly authorized representative and shall also initial this space: In such event, the Bidder shall furnish together with its bid response a duly executed written explanation of the facts supporting any exception to the requirement for certification that it claims under Section 287.135 of the Florida Statutes. The Bidder agrees to cooperate fully with the County in any investigation undertaken by the County to determine whether the claimed exception would be applicable. The County shall have the right to terminate any contract resulting from this solicitation for default if the Bidder is found to have submitted a false certification or to have been placed on the Scrutinized Companies for Activities in Sudan List or the Scrutinized Companies with Activities in the Iran Petroleum Energy Sector List.

IT IS HEREBY CERTIFIED AND AFFIRMED THAT THE BIDDER SHALL ACCEPT ANY AWARDS MADE AS A RESULT OF THIS SOLICITATION. BIDDER FURTHER AGREES THAT PRICES QUOTED WILL REMAIN FIXED FOR A PERIOD OF ONE HUNDRED AND **EIGHTY (180) DAYS FROM DATE SOLICITATION IS DUE.**

WAIVER OF CONFIDENTIALITY AND TRADE SECRET TREATMENT OF BID

The Bidder acknowledges and agrees that the submittal of the Bid is governed by Florida's Government in the Sunshine Laws and Public Records Laws as set forth in Florida Statutes Section 286.011 and Florida Statutes Chapter 119. As such, all material submitted as part of, or in support of, the bid will be available for public inspection after opening of bids and may be considered by the County in public.

By submitting a Bid pursuant to this Solicitation, Bidder agrees that all such materials may be considered to be public records. The Bidder shall not submit any information in response to this Solicitation which the Bidder considers to be a trade secret, proprietary or **confidential.**

In the event that the Bid contains a claim that all or a portion of the Bid submitted contains confidential, proprietary or trade secret information, the Bidder, by signing below, knowingly and expressly waives all claims made that the Bid, or any part thereof no matter how indicated, is confidential, proprietary or a trade secret and authorizes the County to release such information to the public for any reason.

Acknowledgment of Waiver:

Bidder's Authorized Representative's Signature: *	Date *
Type or Print Name *	
Type or Print Title *	

THE EXECUTION OF THIS FORM CONSTITUTES THE UNEQUIVOCAL OFFER OF THE BIDDER TO BE BOUND BY THE TERMS OF ITS OFFER. FAILURE TO SIGN THIS SOLICITATION WHERE INDICATED ABOVE BY AN AUTHORIZED REPRESENTATIVE SHALL RENDER THE BID NON-**RESPONSIVE. THE COUNTY MAY, HOWEVER, IN ITS SOLE DISCRETION, ACCEPT ANY RESPONSE THAT INCLUDES AN** EXECUTED DOCUMENT WHICH UNEQUIVOCALLY BINDS THE BIDDER TO THE TERMS OF ITS OFFER.

Bidder's Authorized Representative's Signature: *	Date *
Type or Print Name *	
Type or Print Title *	

Miami-Dade County

Contractor Due Diligence Affidavit

Per Miami-Dade County Board of County Commissioners (Board) Resolution No. R-63-14, County Vendors and Contractors shall disclose the following as a condition of award for any contract that exceeds one million dollars ($1,000,000) or that otherwise must be presented to the Board for approval:

(1) Provide a list of all lawsuits in the five (5) years prior to bid or proposal submittal that have been filed against the firm, its directors, partners, principals and/or board members based on a breach of contract by the firm; include the case name, number and disposition;

(2) Provide a list of any instances in the five (5) years prior to bid or proposal submittal where the firm has defaulted; include a brief description of the circumstances;

(3) Provide a list of any instances in the five (5) years prior to bid or proposal submittal where the firm has been debarred or received a formal notice of non-compliance or non-performance, such as a notice to cure or a suspension from participating or bidding for contracts, whether related to Miami-Dade County or not.

All of the above information shall be attached to the executed affidavit and submitted to the Procurement Contracting Officer (PCO)/ AE Selection Coordinator overseeing this solicitation. The Vendor/Contractor attests to providing all of the above information, if applicable, to the PCO.

Contract No. : _____ Federal Employer Identification Number (FEIN): _____

Contract Title: _____

Printed Name of Affiant	Printed Title of Affiant	Signature of Affiant
Name of Firm		Date
Address of Firm	State	Zip Code

Notary Public Information

Notary Public – State of _____ County of _____

Subscribed and sworn to (or affirmed) before me this _____ day of, _____ 20___

by _____ He or she is personally known to me or has produced identification

Type of identification produced _____

_____ Signature of Notary Public

_____ Serial Number

_____ Print or Stamp of Notary Public

Expiration Date

_____ Notary Public Seal

FAIR SUBCONTRACTING PRACTICES

In compliance with Miami-Dade County Code Section 2-8.8, the Bidder/Proposer shall submit with the proposal a detailed statement of its policies and procedures (use separate sheet if necessary) for awarding subcontractors.

☐ NO SUBCONTRACTORS WILL BE UTILIZED FOR THIS CONTRACT

Signature

Date

SUBCONTRACTOR/SUPPLIER LISTING
(Miami-Dade County Code Sections 2-8.1, 2-8.8 and 10-34)

Name of Bidder/Proposer: FEIN No.

In accordance with Sections 2-8.1, 2-8.8 and 10.34 of the Miami-Dade County Code, this form must be submitted as a condition of award by all Bidders/Proposers on County contracts for purchase of supplies, materials or services, including professional services which involve expenditures of $100,000 or more, and all Proposers on County or Public Health Trust construction contracts which involve expenditures of $100,000 or more. The Bidder/Proposer who is awarded this contract shall not change or substitute first tier subcontractors or direct suppliers or the portions of the contract work to be performed or materials to be supplied from those identified, except upon written approval of the County. The Bidder/Proposer should enter the word "NONE" under the appropriate heading of this form if no subcontractors or suppliers will be used on the contract and sign the form below.

In accordance with Ordinance No. 11-90, an entity contracting with the County shall report the race, gender and ethnic origin of the owners and employees of all first tier subcontractors/suppliers. In the event that the recommended Bidder/Proposer demonstrates to the County prior to award that the race, gender, and ethnic information is not reasonably available at that time, the Bidder/Proposer shall be obligated to exercise diligent efforts to obtain that information and provide the same to the County not later than ten (10) days after it becomes available and, in any event, prior to final payment under the contract.

(Please duplicate this form if additional space is needed.)

Business Name and Address of First Tier Direct Supplier	Principal Owner	Supplies/ Materials/ Services to be Provided by Supplier	Principal Owner (Enter the number of male and female owners by race/ethnicity)								Employee(s) (Enter the number of male and female employees and the number of employees by race/ethnicity)							
			M	F	White	Black	Hispanic	Asian/Pacific Islander	Native American/ Native Alaskan	Other	M	F	White	Black	Hispanic	Asian/Pacific Islander	Native American/ Native Alaskan	Oth

Business Name and Address of First Tier Subcontractor/ Subconsultant	Principal Owner	Scope of Work to be Performed by Subcontractor/ Subconsultant	Principal Owner (Enter the number of male and female owners by race/ethnicity)								Employee(s) (Enter the number of male and female employees and the number of employees by race/ethnicity)							
			M	F	White	Black	Hispanic	Asian/Pacific Islander	Native American/ Native Alaskan	Other	M	F	White	Black	Hispanic	Asian/Pacific Islander	Native American/ Native Alaskan	Oth

☐ Mark here if race, gender and ethnicity information is not available and will be provided at a later date. This data may be submitted to contracting department or on-line to the Small Business Development of the Internal Services Department at http://www.miamidade.gov/business/busin development-contracts.asp. As a condition of final payment, Bidder/Proposer shall provide subcontractor information on the Subcontractor Payment Report Sub 200 form which can be found at http://www.miamidade.gov/business/library/forms/subcontractors-payment.pdf.

I certify that the representations contained in this Subcontractor/Supplier listing are to the best of my knowledge true and accurate.

Signature of Bidder/Proposer | Print Name | Print Title | Date

Question and Answers for Solicitation #RTQ-00662 - DEWATERING & TANK CLEANING SERVICES PRE-QUALIFICATION

Overall Solicitation Questions

Question 1

The information to be provided in Section 4 - Bid Submittal does not appear to have a form or boxes online to fill out. Â Is this form to be filled out offline and then uploaded to the Bidsync system?Â We do not see where to upload additional documents and would like to ask how this section is expected to be completed and provided to Miami Dade? **(Submitted: Mar 7, 2018 1:54:43 PM EST)**

Question 2

In Section 4 - Bid Submittal, Item 2.3.f appears to be asking for licensing and permits for OSHA for transportation and we have no knowledge of OSHA licensing for transportation. Would the question be referencing other agencies such as DOT for transportation licenses?Â **(Submitted: Mar 7, 2018 1:55:12 PM EST)**

Question 3

For the Contractor Due Diligence Affidavit there is a section that requires a notary public signature.Â There is a portion of the Affidavit that has boxes to be filled out online, but the notary public section does not.Â Please explain how this information is expected to be provided? **(Submitted: Mar 7, 2018 1:56:28 PM EST)**

Question 4

Reviewing the Affidavit â€“ Subcontractor Listing Form, is this required at this stage of qualification? Without all the information for the Scope of Work it would be difficult determine the specific subcontractor and/or suppliers we may be using at this time. We would request this be removed from for this pre-qualification stage and used at the pricing proposal stage for this project as we feel we will have a better understanding of the subcontractors and supplies we plan to hire. **(Submitted: Mar 7, 2018 2:07:31 PM EST)**

ATTACHMENT B

SITE SCHEMATIC

THIS PAGE

INTENTIONALLY

LEFT BLANK

FIGURE 1 SCHEMATIC SITE

THIS PAGE

INTENTIONALLY

LEFT BLANK

ATTACHMENT C

AS-BUILT

THIS PAGE

INTENTIONALLY

LEFT BLANK

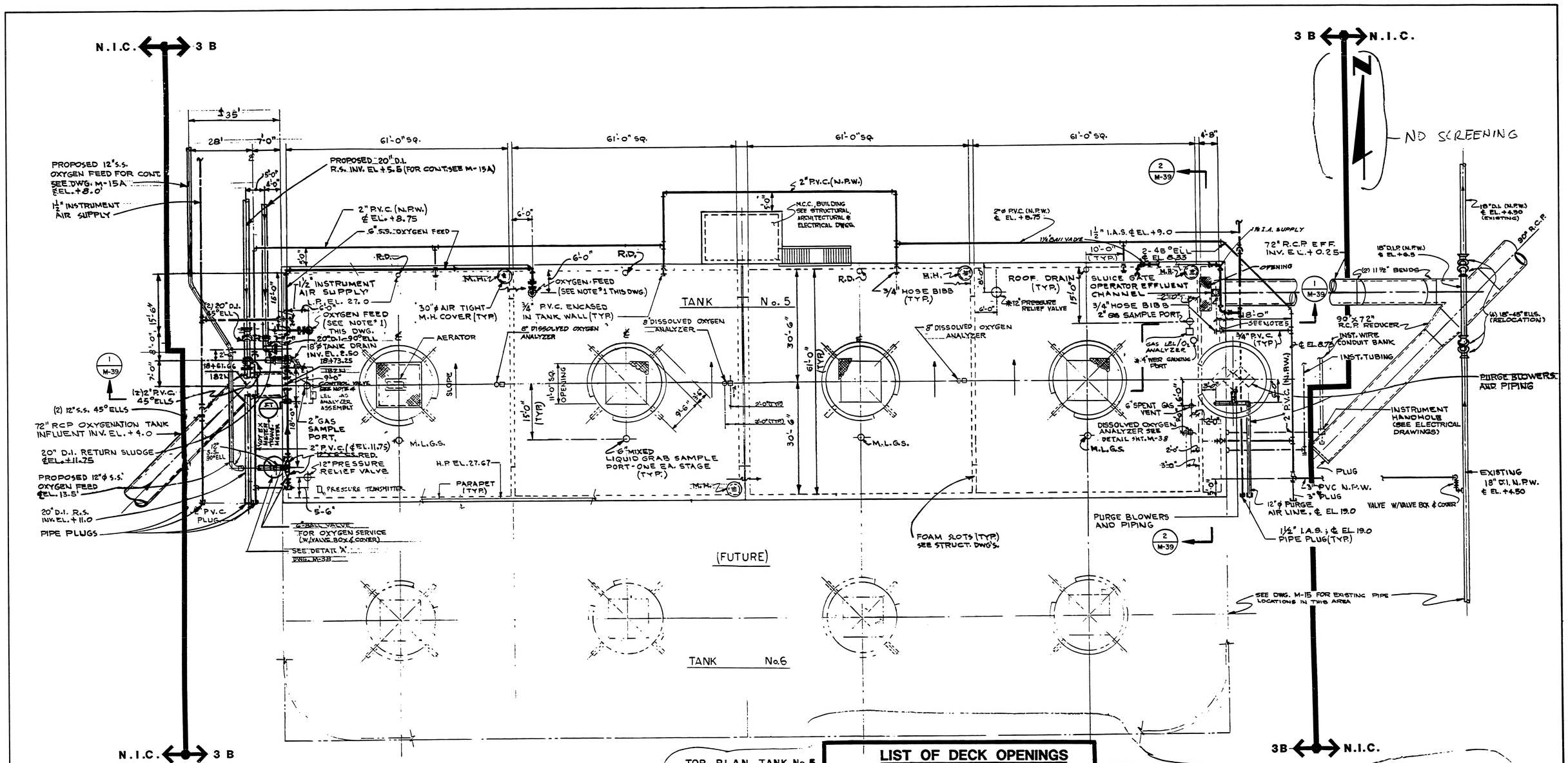

TOP PLAN TANK No. 5
SCALE: 3/32" = 1'-0"

NO SCREENING

LIST OF DECK OPENINGS

LEGEND		PIPE SIZE	QUANTITY
R.V.	-RELIEF VALVE	12"	2
O2F	-OXYGEN FEED	6"	2
O2V	-OXYGEN VENT	6"	1
M.H.	-MANHOLE	30" MIN.	4
M.L.G.S.	-MIXED LIQUID GRAB SAMPLE PORT	6"	4
P.P.	-PURGE AIR PIPING PENETRATION	8	1
W.G.P.	-WEIR GAUGING PORT	4"	1
G.S.P.	-GAS SAMPLE PORT	2"	2
D.O.	-DISSOLVED OXYGEN PROBE PENETRATION	8"	4
R.D.	- ROOF DRAIN	6"	4
SLG.V.	SLUICE GATE VALVE STEM	4" (±)	1

(±) OR AS REQUIRED BY MANUFACTURER

NOTES:

1-) PIPING & VALVING MATERIALS, ARRANGEMENT AND ALL CONNECTIONS TO THE TANKS INCLUDING ALL CONTROL VALVES, PRESSURE SENSORS, CONTROLLERS, GAS METERS, ETC. TO BE LOCATED ON THIS PIPE IN ACCORDANCE WITH THE MANUFACTURERS REQUIREMENTS SUBJECT TO APPROVAL BY THE DEPARTMENT.

2) SEE STRUCT. DWG. S-28 FOR DECK AND FOUNDATION PLAN.

3) FOR TANK SECTIONS & DETAILS SEE DWGS M-38 & M-39

4) FOR TANK DETAILS SEE LOTEPRO DWGS. 5281-21 (SHT. 1 THRU 3) & 85281-4

5) OR AS REQUIRED BY MANUFACTURER

AS-BUILT
THE POOLE & KENT COMPANY

30% WHOLE SHEET EXCEPT ITEMS MARKED

NO.	DATE	ISSUED FOR	BY
	8-24-90	(RANGED AS LOTEPRO RECOMMENDED LOCATIONS)	

DESIGNED H.K.
DRAWN O.T.
CHECKED H.K.
PROJ. ENGR. H.K.

P.E.

HAZEN AND SAWYER, P.C.
CONSULTING ENGINEERS – MIAMI, FLORIDA
-IN ASSOCIATION WITH-
POST, BUCKLEY, SCHUH & JERNIGAN, INC.
CONSULTING ENGINEERS & PLANNERS – MIAMI, FLORIDA

MIAMI-DADE WATER AND SEWER AUTHORITY DEPARTMENT
NORTH DISTRICT WASTEWATER TREATMENT PLANT EXPANSION – PHASE I
DADE COUNTY, FLORIDA

OXYGENATION TANK No. 5
PLAN
DIVISION 3B

CONTRACT NUMBER(S) S-348
EPA C-120375310
DATE NOV. 1988

DWG S-9213-D
SHEET 52 OF 213
REF. NO. M-37

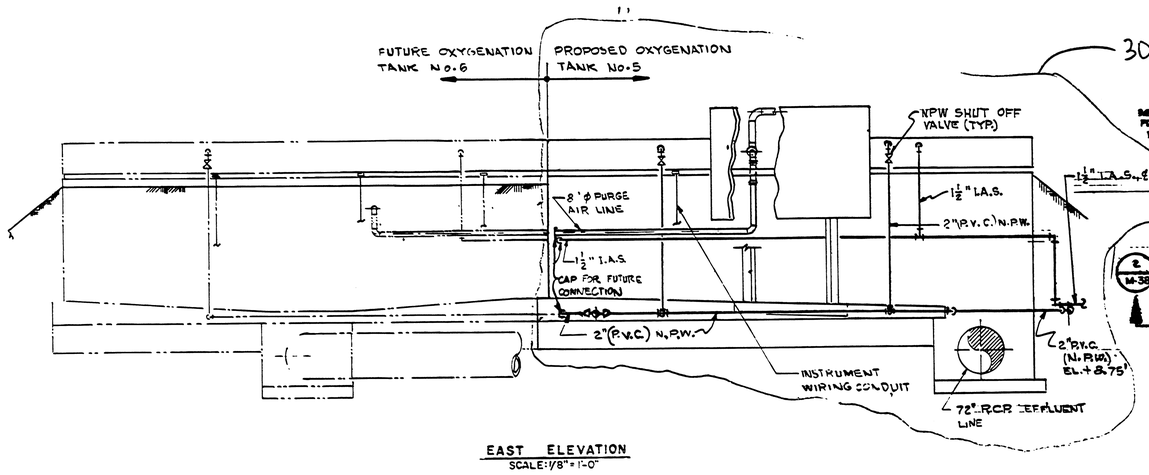

EAST ELEVATION
SCALE: 1/8" = 1'-0"

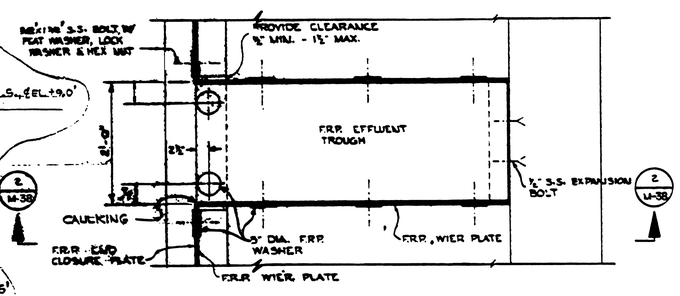

PLAN
SCALE: 1" = 1'-0"

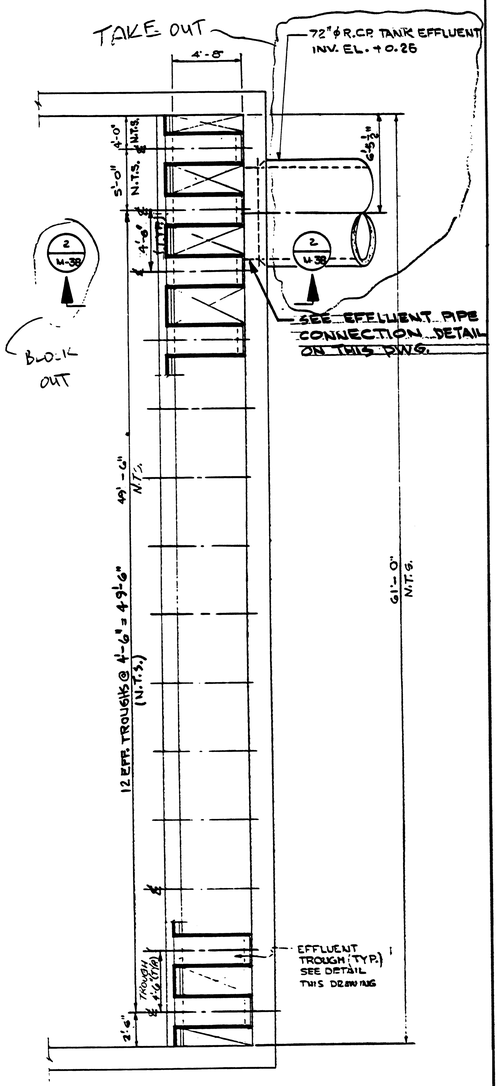

SECTIONAL PLAN (3 / M-38)
SCALE: NONE

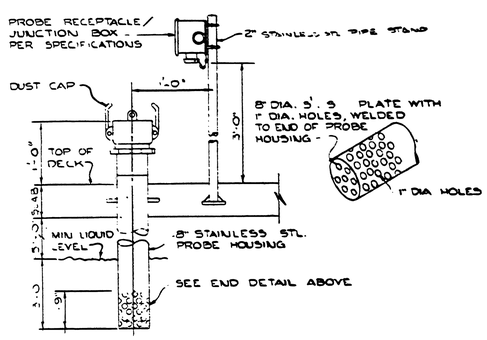

DISSOLVED OXYGEN MONITORING STATION-(✱)
NTS

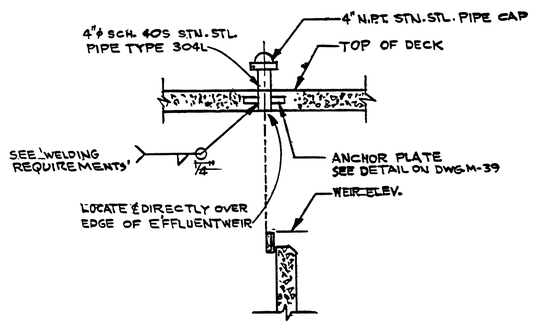

WEIR GAUGING PORT DETAIL-(✱)
N.T.S.

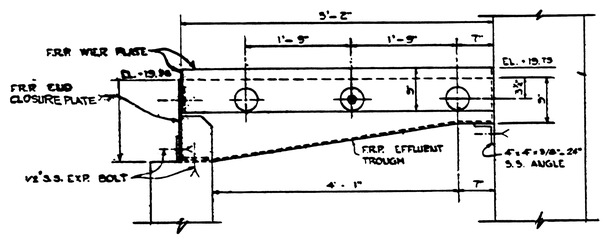

SECTION (2 / M-38)
SCALE: 1" = 1'-0"

FIBER GLASS EFFL. TROUGH DETAIL

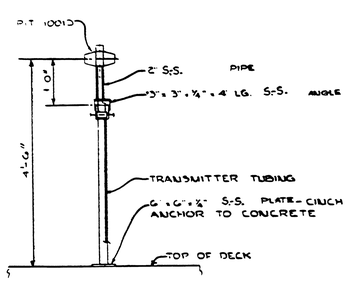

PRESSURE TRANSMITTER MOUNTING-(✱)
N.T.S.

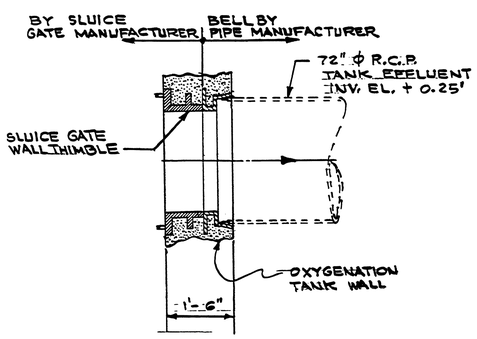

EFFLUENT PIPE CONNECTION DETAIL
N.T.S.

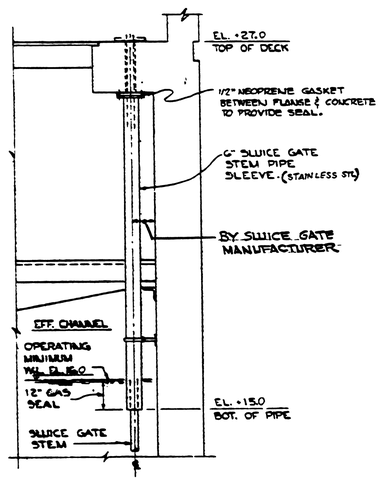

DETAIL (B / M-38)
SCALE: 1/2" = 1'-0"

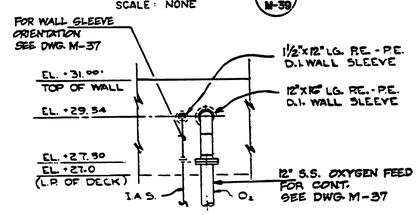

NO SCALLOPING EXCEPT WHERE MARKED. BLOCK OUT ITEMS MARKED

DETAIL (A / M-37)
N.T.S.

NOTE:
✱ SEE LOTEPRO CORR. DWG'S. 5281:21 SHT. 1 THRU SHT. 3 & 85281-14.

AS-BUILT
THE POOLE & KENT COMPANY

NO.	DATE	ISSUED FOR	BY

DESIGNED H.K. | DRAWN O.C. | CHECKED H.K. | PROJ. ENGR. H.K. | P.E.

HAZEN AND SAWYER, P.C.
CONSULTING ENGINEERS – MIAMI, FLORIDA
-IN ASSOCIATION WITH-
POST, BUCKLEY, SCHUH & JERNIGAN, INC.
CONSULTING ENGINEERS & PLANNERS – MIAMI, FLORIDA

MIAMI-DADE WATER AND SEWER AUTHORITY DEPARTMENT
NORTH DISTRICT WASTEWATER TREATMENT PLANT EXPANSION – PHASE I
DADE COUNTY, FLORIDA

OXYGENATION TANK No.5
SECTIONS AND DETAILS
DIVISION 38

CONTRACT NUMBER(S) S - 348
EPA C - 120375310
DATE NOV. 1988

DWG S-9214-D
SHEET 53 OF 213
REF. NO. M-38

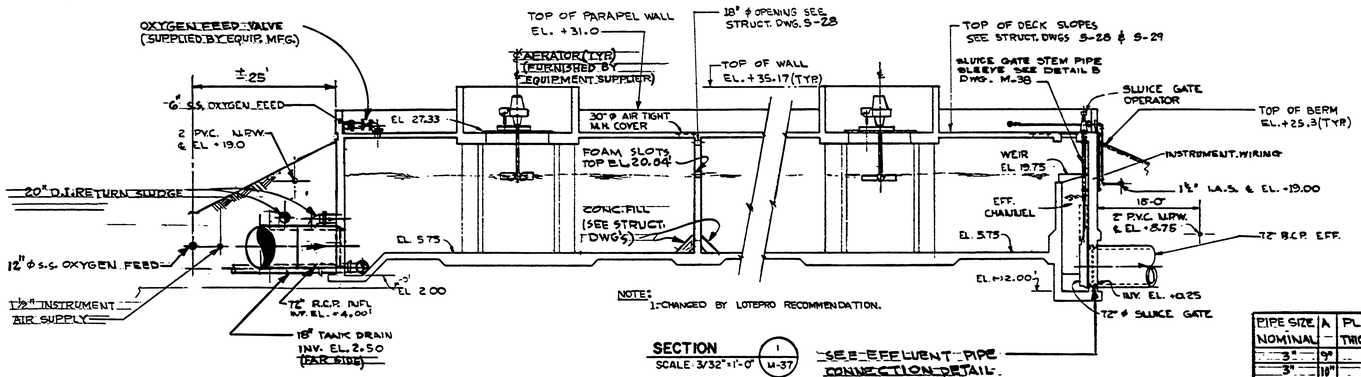

NOTE:
1-CHANGED BY LOTEPRO RECOMMENDATION.

SECTION (1 / M-37)
SCALE 3/32" = 1'-0"

SEE EFFLUENT PIPE CONNECTION DETAIL DWG. M-38

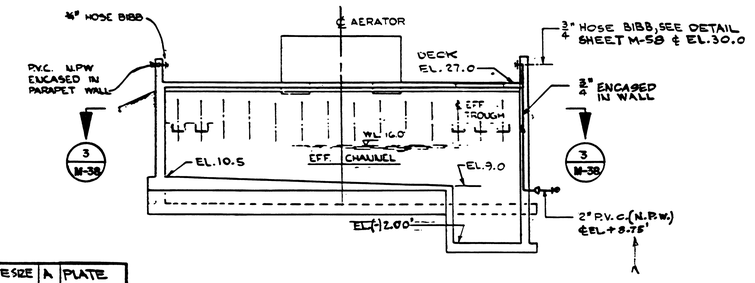

SECTION (2 / M-37)
SCALE 3/32" = 1'-0"

PIPE SIZE NOMINAL	A	PLATE THICKNESS	PIPE SIZE NOMINAL	A	PLATE THICKNESS
3"	9"	¼"	12"	20"	½"
3"	10"	½"	14"	21"	½"
4"	12"	½"	16"	23"	½"
5"	14"	½"	18"	25"	½"
6"	15"	½"	20"	27"	½"
8"	16"	½"	24"	31"	½"
10"	18"	½"	30"	37"	½"

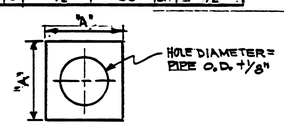

CARBON STEEL ANCHOR PLATE DETAIL (*)
N.T.S.

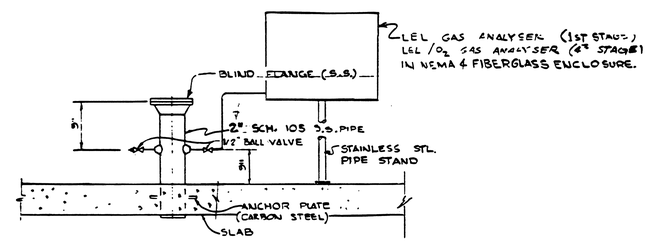

GAS SAMPLE PORT (*)
N.T.S.

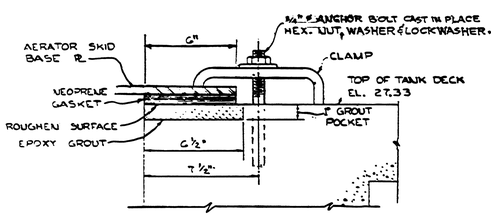

AERATOR SKID ANCHOR BOLT & GROUT POCKET-DET'L (*)
N.T.S.

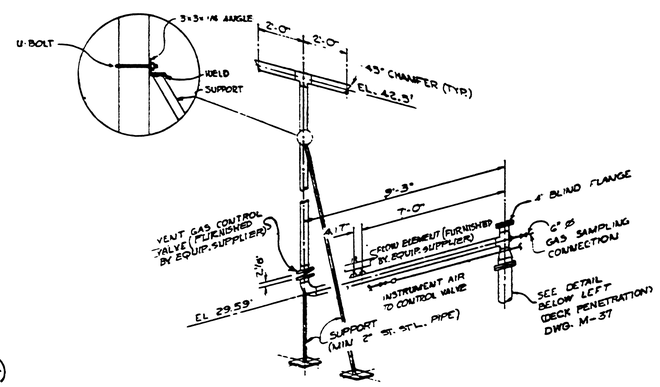

SPENT O_2 VENT & SAMPLING DETAIL (*)
N.T.S.

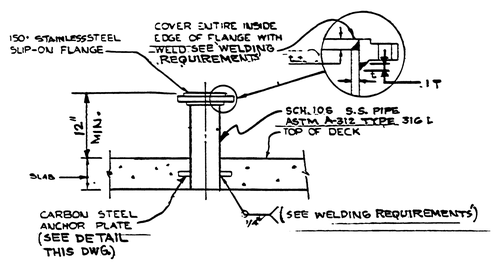

TYP. DECK PENETRATION DET'L FOR O_2 SUPPLY, O_2 VENT & RELIEF VALVE (*)
N.T.S.

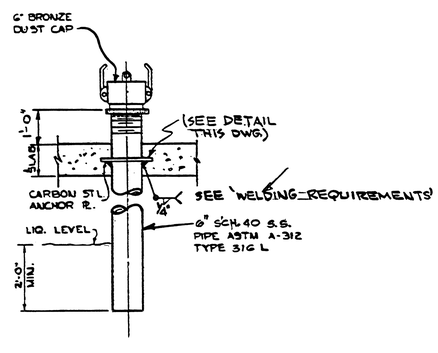

TYPICAL MIXED LIQUID GRAB SAMPLE PORT (*)
N.T.S.

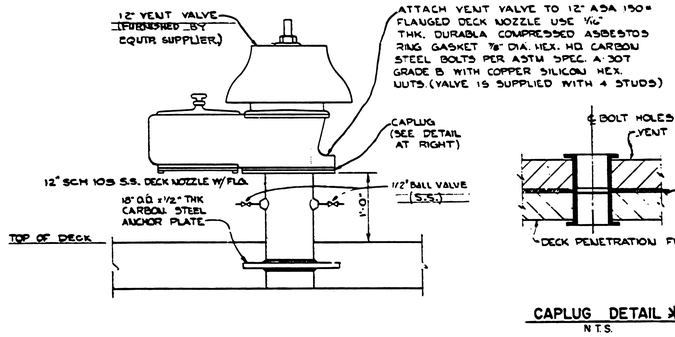

RELIEF DEVICE (RD) *
N.T.S.

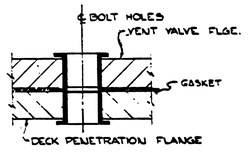

CAPLUG DETAIL *
N.T.S.

NOTE:
* = SEE LOTEPRO. CORP. DWG'S: 5281-21 SHT. 1 THRU SHT. 3
& 85281-14

AS-BUILT
THE POOLE & KENT COMPANY

NO.	DATE	ISSUED FOR	BY
	8-24-90	CHANGED BY LOTERO RECOMMENDATION	

DESIGNED M.K.
DRAWN O.T.
CHECKED H.K.
PROJ. ENGR. H.K.
P.E.

HAZEN AND SAWYER, P.C.
CONSULTING ENGINEERS – MIAMI, FLORIDA
–IN ASSOCIATION WITH–
POST, BUCKLEY, SCHUH & JERNIGAN, INC.
CONSULTING ENGINEERS & PLANNERS – MIAMI, FLORIDA

MIAMI–DADE WATER AND SEWER AUTHORITY DEPARTMENT
NORTH DISTRICT WASTEWATER TREATMENT PLANT EXPANSION – PHASE I
DADE COUNTY, FLORIDA

OXYGENATION TANK No.5
SECTIONS AND DETAILS
DIVISION 38

CONTRACT NUMBER(S) S - 348
EPA C - 120375310
DATE NOV. 1988

DWG S-9215-D
SHEET 54 OF 213
REF. NO. M-39

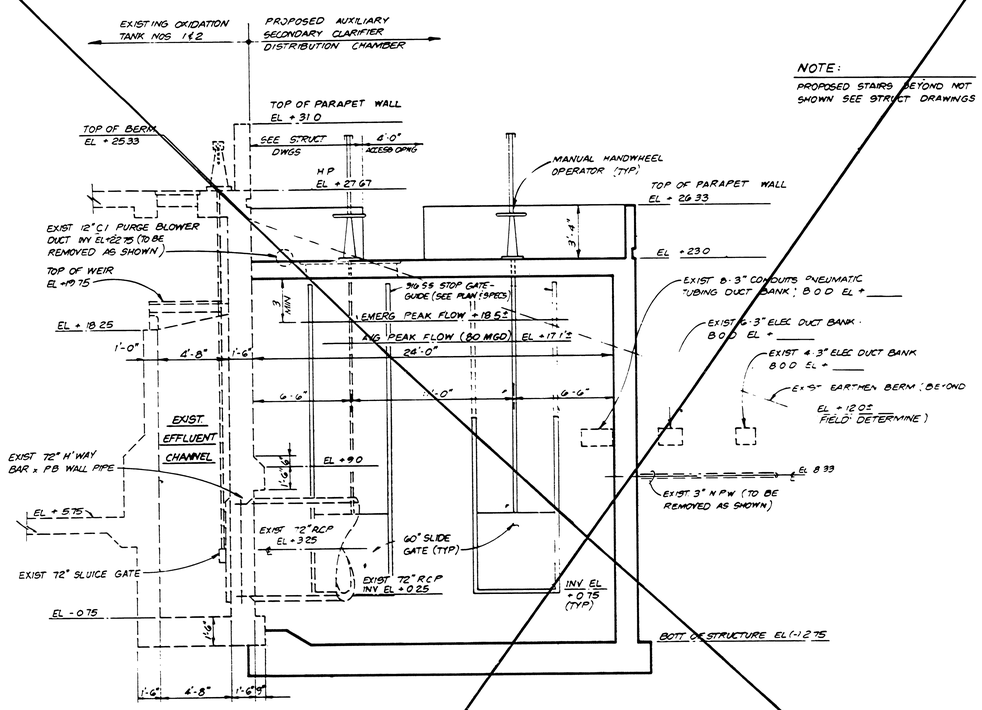

SECTION 1
SCALE: 1/4" = 1'-0" M-40

N.I.C.

NOTE:
PROPOSED STAIRS BEYOND NOT SHOWN SEE STRUCT DRAWINGS

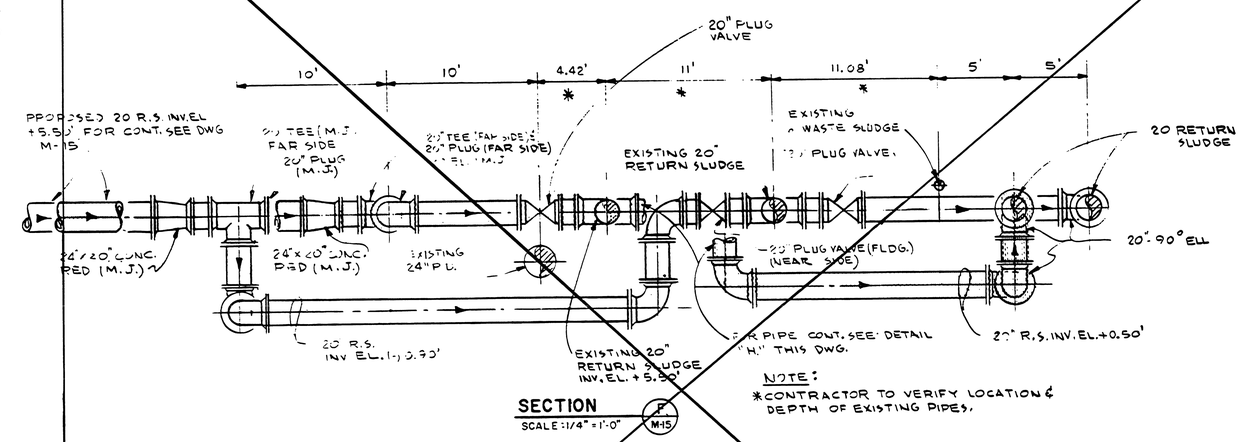

SECTION F
SCALE: 1/4" = 1'-0" M-15

NOTE:
*CONTRACTOR TO VERIFY LOCATION & DEPTH OF EXISTING PIPES.

N.I.C.

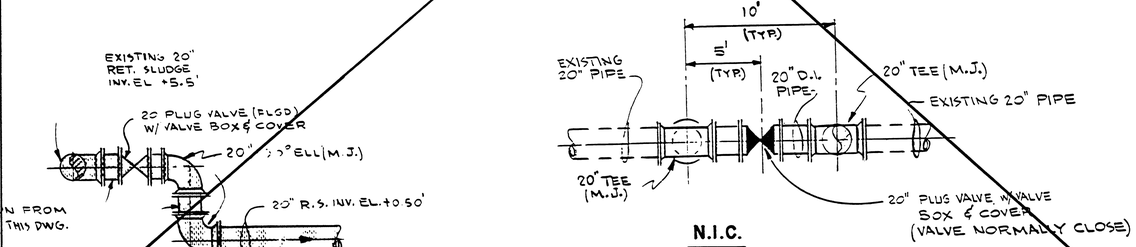

DETAIL H
SCALE: 1/4" = 1'-0" M-41

N.I.C.

SECTION G
SCALE: 1/4" = 1'-0" M-15

NOTE:
1. THIS SECTION TYPICAL FOR BOTH RETURN SLUDGE PIPING FOR CONT. SEE PLAN ON DWG. M-15
2. ALL JOINTS TO BE RESTRAINED JOINTS.
3. MAKE CONNECTIONS WITH SOLID SLEEVES OR DRESSER COUPLINGS AT ALL PLACES WHERE VALVES/FITTINGS ARE CUT IN TO EXISTING LINES

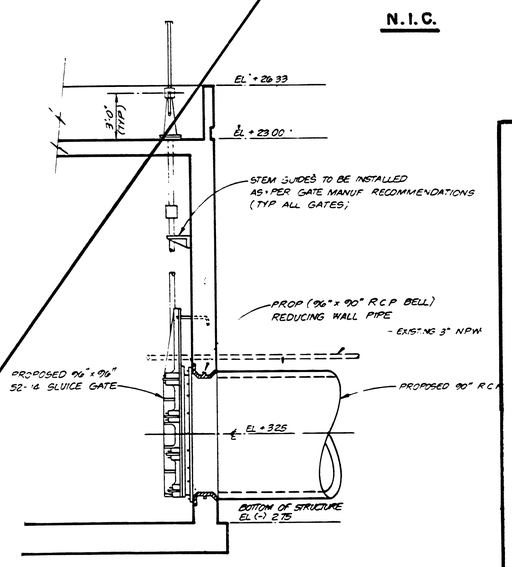

SECTION 2
SCALE: 1/4" = 1'-0" M-40

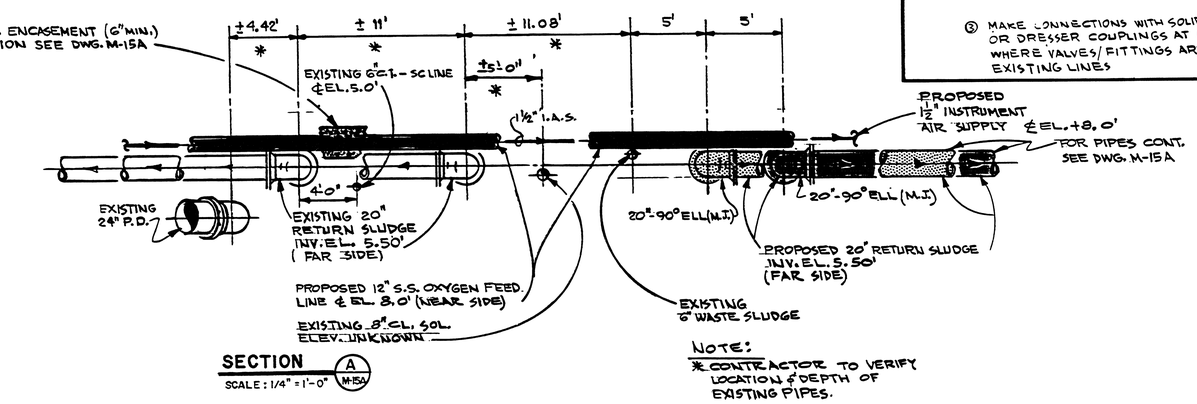

SECTION A
SCALE: 1/4" = 1'-0" M-15A

NOTE:
*CONTRACTOR TO VERIFY LOCATION & DEPTH OF EXISTING PIPES.

AS-BUILT
THE POOLE & KENT COMPANY

NO.	DATE	ISSUED FOR	BY

DESIGNED O.T.
DRAWN R.H.
CHECKED M.M.
PROJ. ENGR. M.M.
P.E.

HAZEN AND SAWYER, P.C.
CONSULTING ENGINEERS – MIAMI FLORIDA
-IN ASSOCIATION WITH-
POST, BUCKLEY, SCHUH & JERNIGAN, INC.
CONSULTING ENGINEERS & PLANNERS – MIAMI, FLORIDA

MIAMI–DADE WATER AND SEWER AUTHORITY DEPARTMENT
NORTH DISTRICT WASTEWATER TREATMENT PLANT EXPANSION – PHASE I
DADE COUNTY, FLORIDA

OXYGENATION TANK
SECTIONS
DIVISION 3B

CONTRACT NUMBER(S) S - 348
EPA C - 120375310
DATE NOV. 1988

DWG S-9217-D
SHEET 56 OF 213
REF. NO. M-41

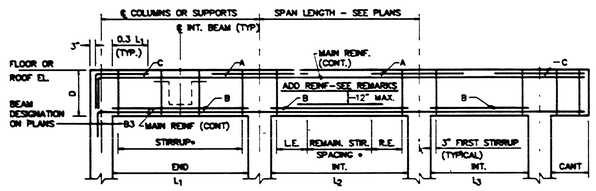

* STIRRUP (SEE BEAM SCHEDULE)
E.E. DENOTES EACH END
L.E. DENOTES LEFT END
R.E. DENOTES RIGHT END

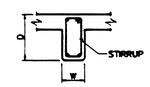

TYPICAL BEAM SECTION

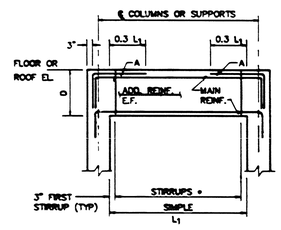

TYPICAL BEAM ELEVATION DIAGRAM

N.T.S.

BEAM NOTE:

1. CONCRETE COVERAGE OVER REINFORCING STEEL IN BEAMS.
   A). BEAMS 1-1/2" CLEAR TO TIES.
   B). GRADE BEAMS 2" CLEAR TO TIES ON SIDES AND TOP, 3" ON BOTTOM.
2. CONTINUOUS BOTTOM BARS IN ALL BEAMS SHALL BE SPLICED 30X DIAMETER OF BAR AT COLUMN CENTERLINE
3. CONTINUOUS TOP BAR TO BE SPLICED 30X DIAMETER AT MID-SPAN OF BEAM (ONLY)
4. BOTTOM BARS ON ALL BEAMS, THAT ARE MARKED "B" BARS ON BEAM DIAGRAMS, SHALL EXTEND A MINIMUM OF 6" INTO SUPPORT.
5. ALL TOP & BOTTOM BEAM BARS AT DISCONTINUOUS ENDS SHALL HAVE 90° STANDARD HOOK END.

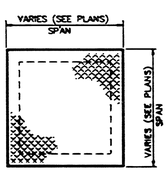

PLAN

ALUMINUM CHECKERED PLATE (SEE TABLE FOR THICKNESS)

SECTION

CHECKERED PLATE SIZE		
MAXIMUM SPAN	THICKNESS OF PLATE	STOP BAR SIZE
1'-6"	1/4"	1/2" x 1/4"
2'-6"	3/8"	1/2" x 3/8"
4'-6"	1/2"	1/2" x 1/2"
6'-6"	3/8"	3/8" x 3/8"

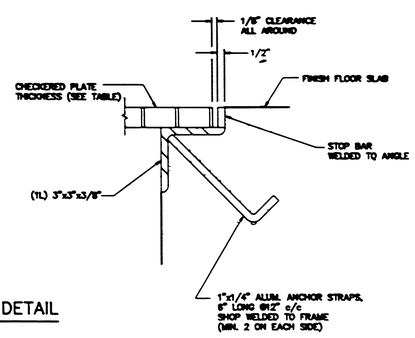

TYPICAL ACCESS HATCH DETAIL

N.T.S.

SPAN	DEPTH (MIN)	ANGLE SUPPORT	ANCHOR BOLT (SIZE & SPACING)
0'-0" - 3'-11"	1"	3x3x3/8	1/2"ø@-1/2" @ 18"
3'-0" - 4'-11"	1 1/2"	3x3x3/8	1/2"ø@-1/2" @ 12"
5'-0" - 8'-0"	2"	4x4x3/8	5/8"ø@ @ 12"

SCHEDULE BASED ON 100 PSF

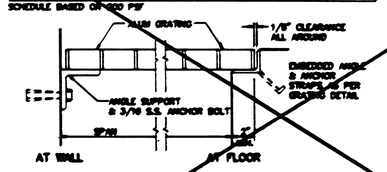

N.I.C.

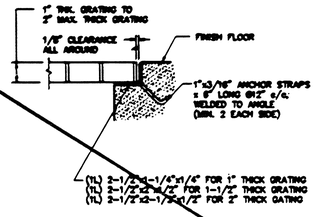

GRATING NOTES

1. MATERIAL
   A. GRATING, FRAME, ANCHOR & FASTENER-T6061-T6 OR 6063-T6 ALUMINUM
   B. INSULATION (REQ'D ONLY WHEN SUPPORT MEMBER IS STEEL) 1/16" THICK "SCHUTA" OR APPROVED EQUAL
2. ALUMINUM FRAME IN CONTACT WITH CONCRETE SHALL BE PAINTED SEE SPECIFICATION SECTION: PAINTING
3. SEE SPECIFICATION SECTION: MISCELLANEOUS METALS FOR GRATING MANUFACTURER & FINISH
4. ALL JOINTS IN FRAME SHALL BE MITERED & CONTINUOUS WELD BOTH SIDES, GRIND EXPOSED WELD SMOOTH
5. EDGE BAND ALL OPENINGS & PERIMETER OF EACH GRATING SECTION
6. FASTENERS SHALL BE SUPPLIED TO ANCHOR TYPE GRATING FURNISHED

TYPICAL ALUMINUM GRATING DETAIL

N.T.S.

AS-BUILT
THE POOLE & KENT COMPANY

NO.	DATE	ISSUED FOR	BY
1	05/06/91	FOUNDATION, STRUCTURAL CHANGES	F.B.C.

DESIGNED Y.N.H.
DRAWN Y.N.H.
CHECKED A.M.W.
PROJ. ENGR. F.B.C.

ANTON M. WYPYCH P.E.
No. 19801

HAZEN AND SAWYER, P.C.
CONSULTING ENGINEERS - MIAMI, FLORIDA
-IN ASSOCIATION WITH-
POST, BUCKLEY, SCHUH & JERNIGAN, INC.
CONSULTING ENGINEERS & PLANNERS - MIAMI, FLORIDA

MIAMI-DADE WATER AND SEWER AUTHORITY DEPARTMENT
NORTH DISTRICT WASTEWATER TREATMENT PLANT EXPANSION - PHASE I
DADE COUNTY, FLORIDA

TYPICAL STRUCTURAL DETAILS
DIVISION 3B

CONTRACT NUMBER(S) S-348
EPA C-120375310
DATE NOV. 1988

DWG S-9278-D
SHEET 117 OF 213
REF. NO. S-12

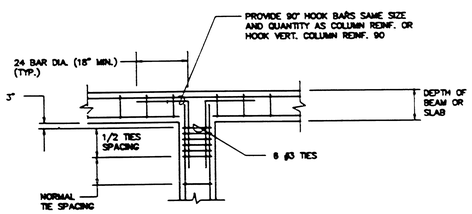

COLUMN TO ROOF BEAM DETAIL

N.T.S.

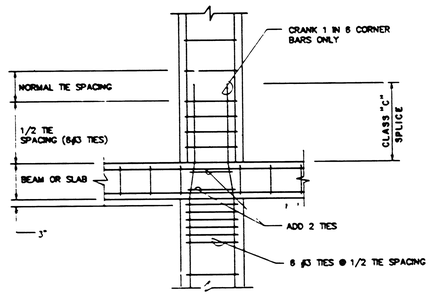

COLUMN THRU INTERMEDIATE BEAM DETAIL

N.T.S.

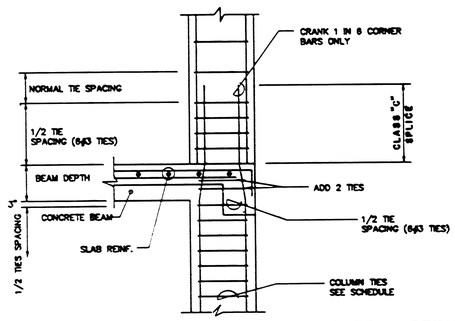

COLUMN THRU INTERMEDIATE END BEAM DETAIL

N.T.S.

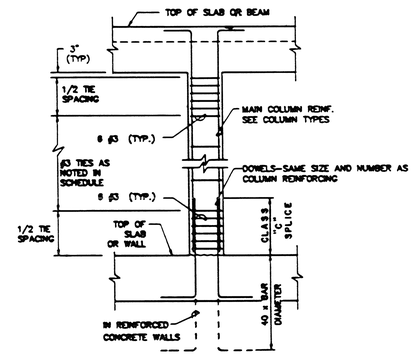

TYPICAL COLUMN ELEVATION

N.T.S.

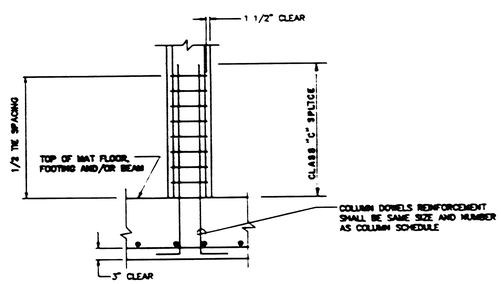

TYPICAL COLUMN AND FOOTING DETAIL

N.T.S

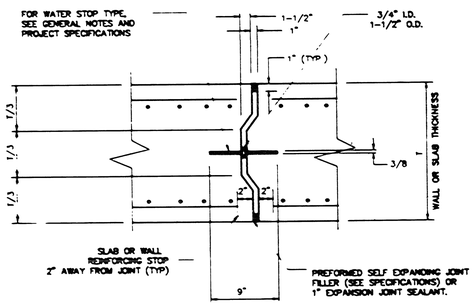

TYPICAL EXPANSION JOINT DETAIL

N.T.S.

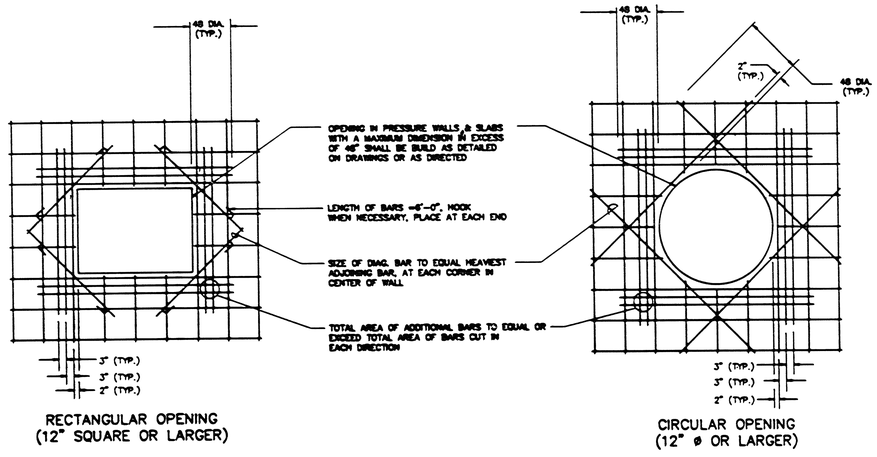

RECTANGULAR OPENING
(12" SQUARE OR LARGER)

CIRCULAR OPENING
(12" ø OR LARGER)

TYPICAL ADDITIONAL REINFORCEMENT AT OPENING FOR SLABS AND WALLS DETAIL

N.T.S.

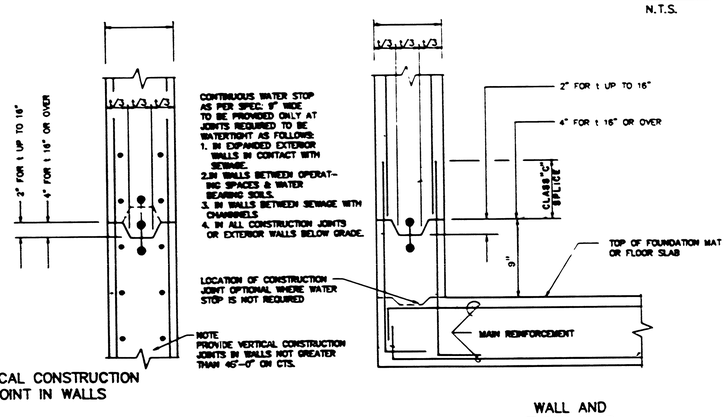

VERTICAL CONSTRUCTION JOINT IN WALLS

WALL AND FLOOR SLAB

TYPICAL CONSTRUCTION JOINT

N.T.S.

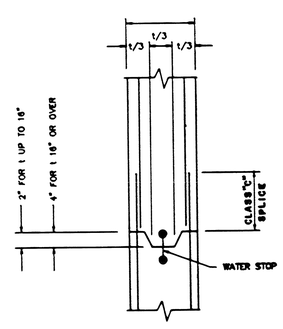

HORIZONTAL CONSTRUCTION JOINT IN WALLS

N.T.S.

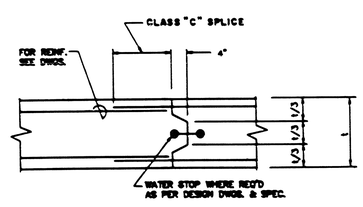

CONSTRUCTION JOINT IN SLAB

N.T.S.

AS-BUILT
THE POOLE & KENT COMPANY

NO.	DATE	REVISED FOR	BY
1	6-04-91	STRUCTURAL CHANGES	F.B.C.

DESIGNED Y.H.H.
DRAWN Y.H.H.
CHECKED A.M.W.
PROJ. ENGR. F.B.C.

ANTON M. WYPYCH P.E. No. 9951

HAZEN AND SAWYER, P.C.
CONSULTING ENGINEERS – MIAMI, FLORIDA
-IN ASSOCIATION WITH-
POST, BUCKLEY, SCHUH & JERNIGAN, INC.
CONSULTING ENGINEERS & PLANNERS – MIAMI, FLORIDA

MIAMI-DADE WATER AND SEWER AUTHORITY DEPARTMENT
NORTH DISTRICT WASTEWATER TREATMENT PLANT EXPANSION – PHASE I
DADE COUNTY, FLORIDA

TYPICAL STRUCTURAL DETAILS
DIVISION 3B

CONTRACT NUMBER(S) S-348
EPA C-120378310
DATE NOV. 1988

DWG S-9279-D
SHEET 118 OF 213
REF. NO. S-13

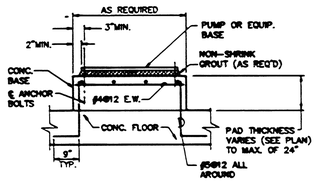

TYPICAL PUMP OR EQUIP. DETAIL

N.T.S.

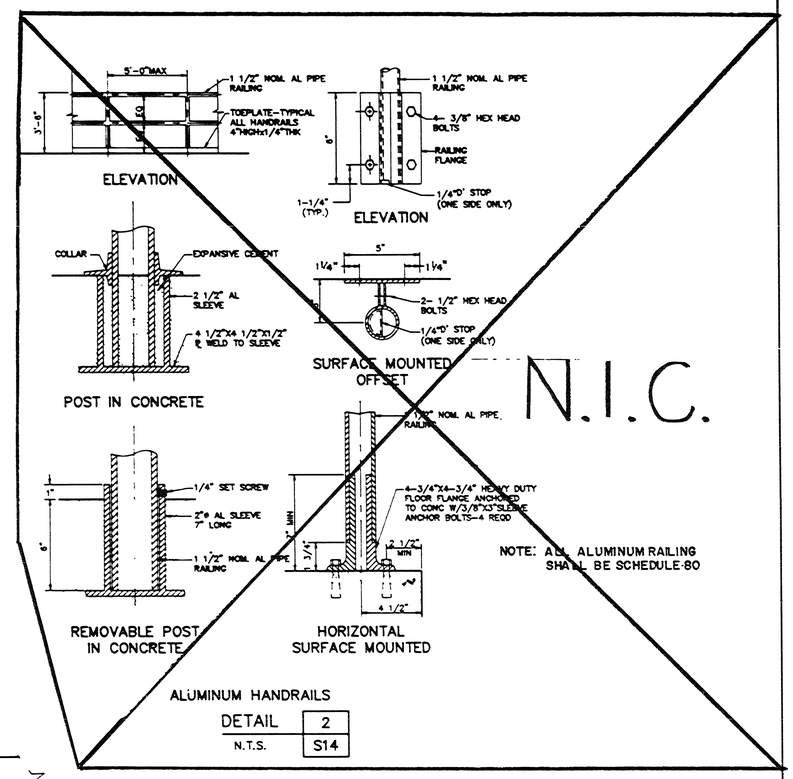

ALUMINUM LADDER NOTES:
1. MATERIAL: ALL ALUMINUM-6061-T6
2. ALUMINUM IN CONTACT WITH CONCRETE SHALL BE PAINTED, SEE SECTION; PAINTING

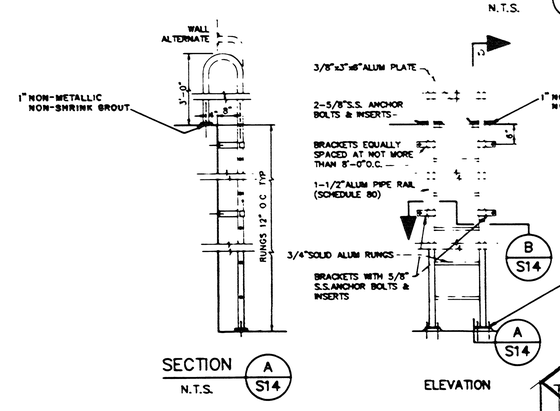

ALUMINUM LADDER

DETAIL 1
N.T.S. S14

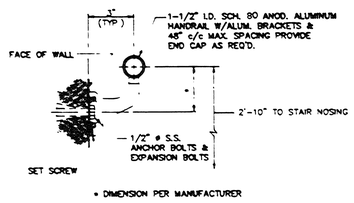

TYPICAL WALL MOUNTED HANDRAIL

N.T.S.

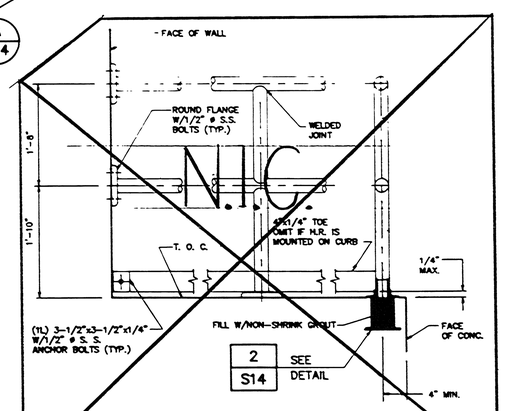

TYPICAL ALUMINUM HANDRAIL DETAIL

N.T.S.

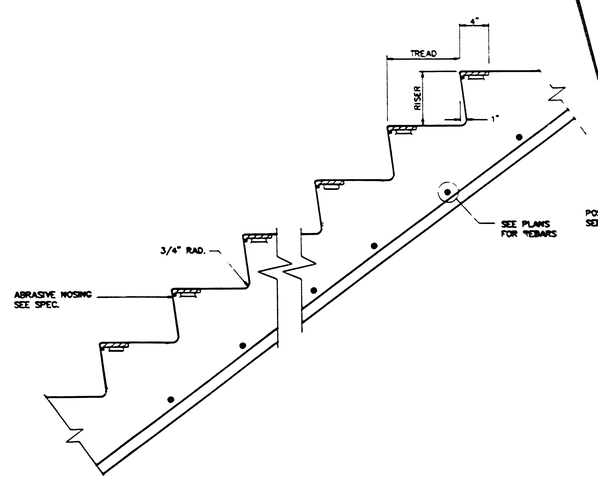

TYPICAL CONCRETE STAIR DETAIL

N.T.S.

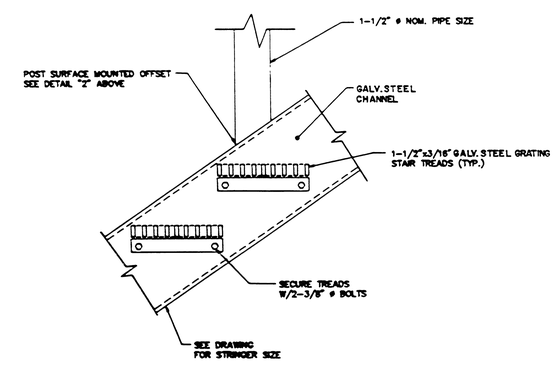

GALV. STEEL STAIR HANDRAIL DETAIL

N.T.S.

3/8"=1'-0" 12" 0 1 2 4'

4700S14 8/29/88

AS-BUILT
THE POOLE & KENT COMPANY

NO.	DATE	ISSUED FOR	BY
1	8-6-91	FOUNDATION, STRUCTURAL CHANGES	

DESIGNED Y.H.H.
DRAWN Y.H.H.
CHECKED A.M.W.
PROJ. ENGR. F.B.C.

ANTON M. WYPYCH P.E.
No. 9951

HAZEN AND SAWYER, P.C.
CONSULTING ENGINEERS - MIAMI, FLORIDA
-IN ASSOCIATION WITH-
POST, BUCKLEY, SCHUH & JERNIGAN, INC.
CONSULTING ENGINEERS & PLANNERS - MIAMI, FLORIDA

MIAMI-DADE WATER AND SEWER AUTHORITY DEPARTMENT
NORTH DISTRICT WASTEWATER TREATMENT PLANT EXPANSION - PHASE I
DADE COUNTY, FLORIDA

TYPICAL STRUCTURAL DETAILS
DIVISION 3B

CONTRACT NUMBER(S) S-348
EPA C-120375310
DATE NOV. 1988

DWG S-9280-D
SHEET 119 OF 213
REF. NO. S-14

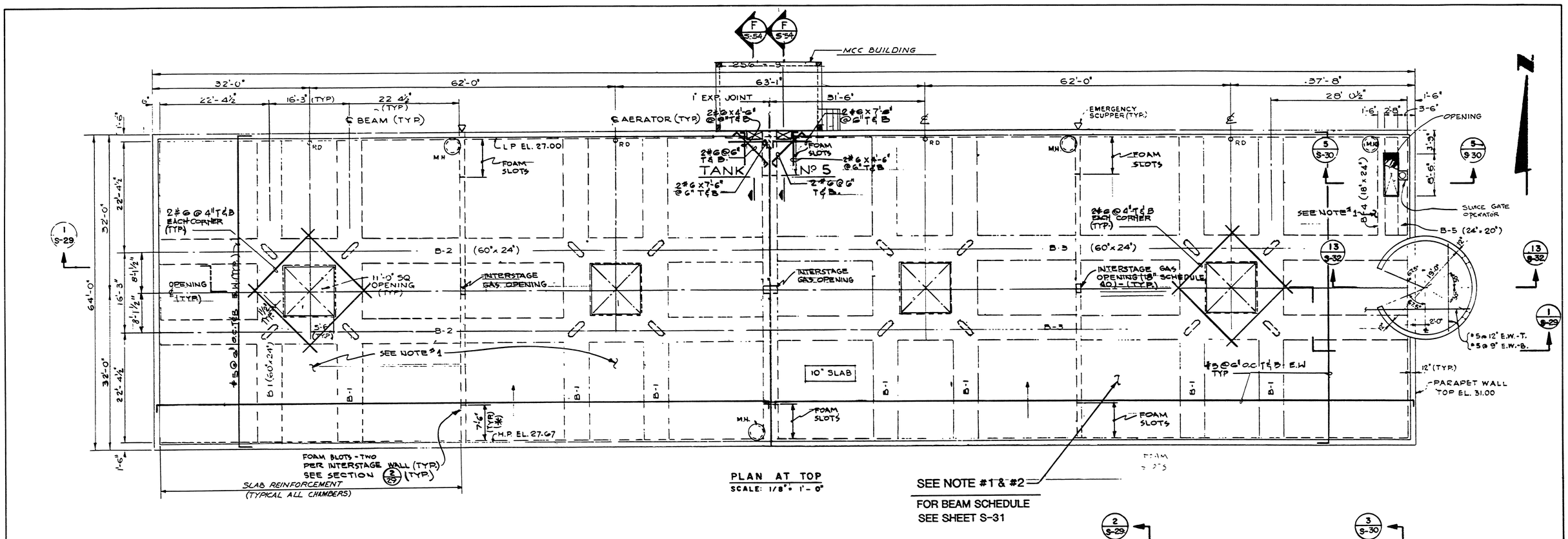

PLAN AT TOP
SCALE: 1/8" = 1'-0"

SEE NOTE #1 & #2

FOR BEAM SCHEDULE SEE SHEET S-31

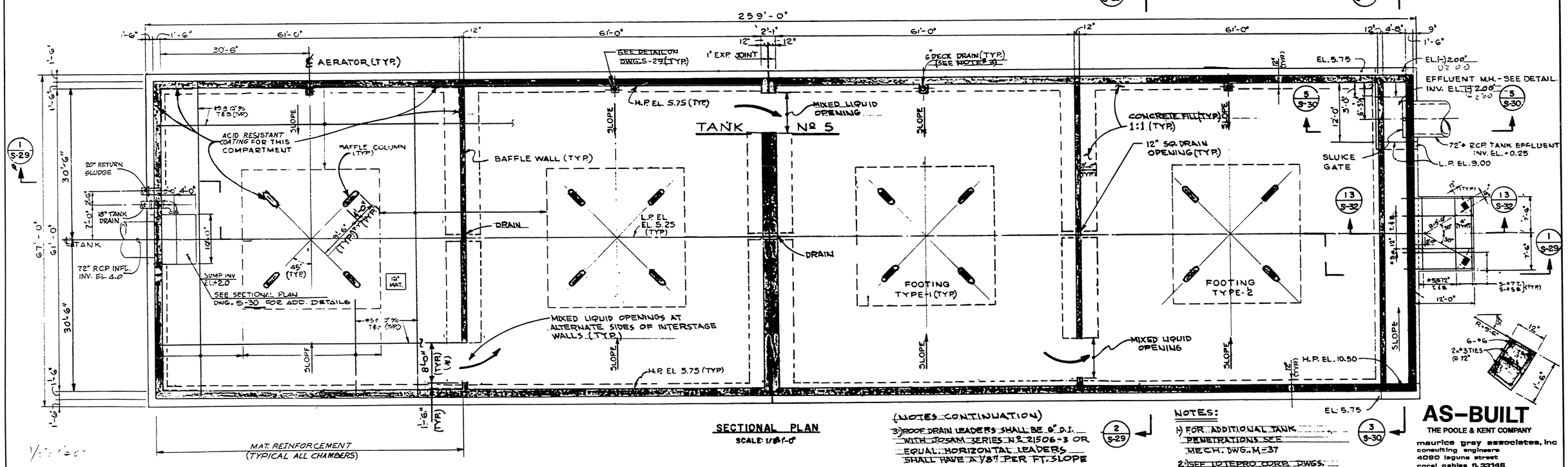

SECTIONAL PLAN
SCALE: 1/8" = 1'-0"

(NOTES CONTINUATION)

3) ROOF DRAIN LEADERS SHALL BE 6" D.I. WITH JOSAM SERIES No. 21506-3 OR EQUAL. HORIZONTAL LEADERS SHALL HAVE A 1/8" PER FT. SLOPE

NOTES:

1) FOR ADDITIONAL TANK PENETRATIONS SEE MECH. DWG. M-37

2) SEE LOTEPRO CORP. DWGS. 5281-21 (SHT. 1 THRU SHT. 3)

AS-BUILT
THE POOLE & KENT COMPANY
maurice gray associates, inc
consulting engineers
4090 laguna street
coral gables fl. 33146
tel. (305) 444-5182

NO.	DATE	ISSUED FOR	BY
	5-11-90	CHANGED AS LOTEPRO RECOMMENDED LOC. (#)	

DESIGNED
DRAWN
CHECKED
PROJ. ENGR.
P.E.

HAZEN AND SAWYER, P.C.
CONSULTING ENGINEERS – MIAMI, FLORIDA
-IN ASSOCIATION WITH-
POST, BUCKLEY, SCHUH & JERNIGAN, INC.
CONSULTING ENGINEERS & PLANNERS – MIAMI, FLORIDA

MIAMI–DADE WATER AND SEWER AUTHORITY DEPARTMENT
NORTH DISTRICT WASTEWATER TREATMENT PLANT EXPANSION – PHASE I
DADE COUNTY, FLORIDA

OXYGENATION TANK No.5
DECK AND FOUNDATION PLAN
DIVISION 3B

CONTRACT NUMBER(S) S - 348
EPA C - 120375310
DATE NOV. 1988

DWG S-9294-D
SHEET 133 OF 213
REF. NO. S-28

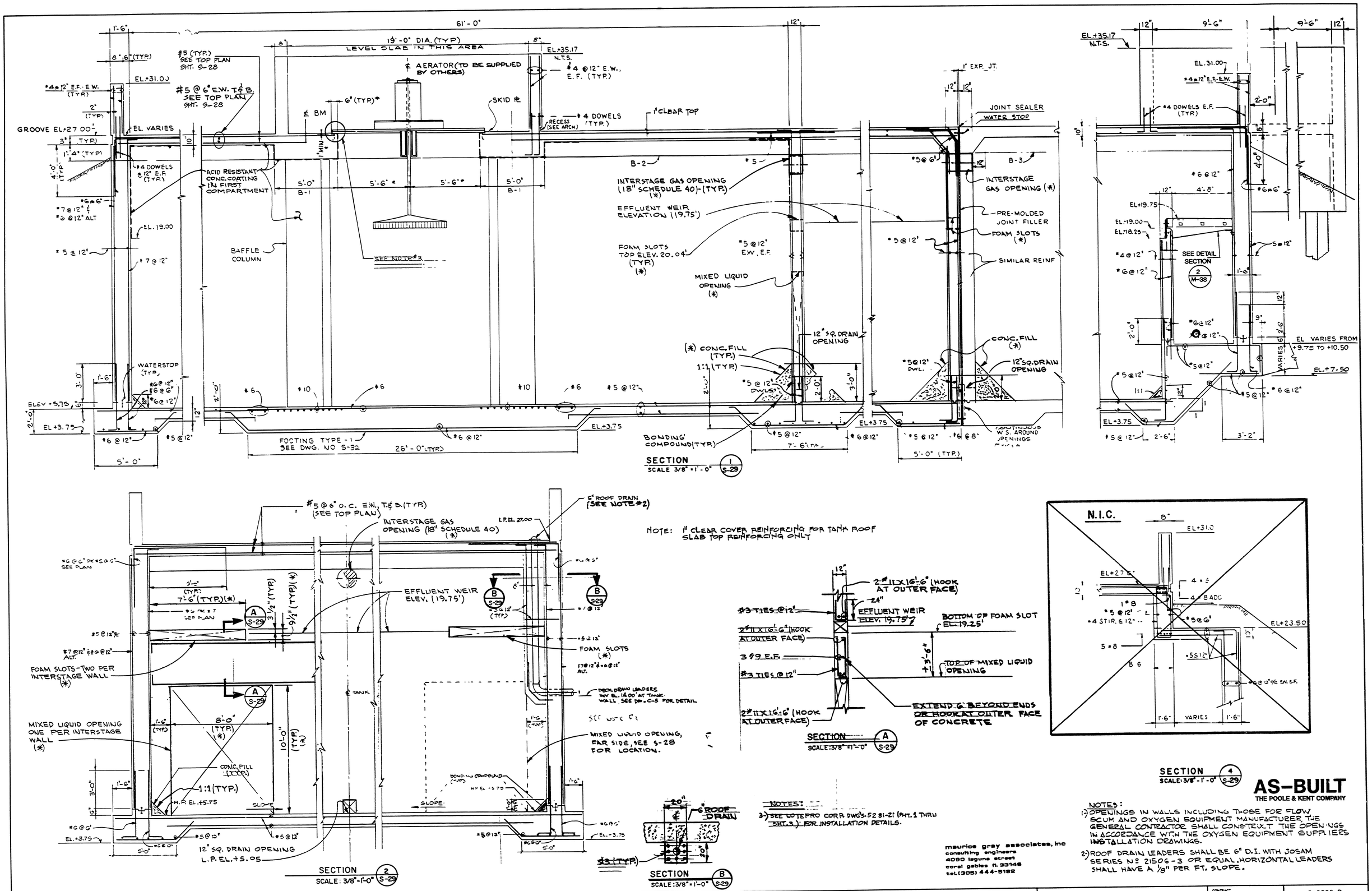

NOTE: 1" CLEAR COVER REINFORCING FOR TANK ROOF SLAB TOP REINFORCING ONLY

SECTION 4 S-29
SCALE: 3/8" = 1'-0"

SECTION B S-29
SCALE: 3/8" = 1'-0"

NOTES:
3) SEE LOTEPRO CORP. DWG'S-52 81-21 (SHT. 1 THRU SHT. 3) FOR INSTALLATION DETAILS.

AS-BUILT
THE POOLE & KENT COMPANY

NOTES:
1) OPENINGS IN WALLS INCLUDING THOSE FOR FLOW, SCUM AND OXYGEN EQUIPMENT MANUFACTURER, THE GENERAL CONTRACTOR SHALL CONSTRUCT THE OPENINGS IN ACCORDANCE WITH THE OXYGEN EQUIPMENT SUPPLIERS INSTALLATION DRAWINGS.
2) ROOF DRAIN LEADERS SHALL BE 6" D.I. WITH JOSAM SERIES Nº 21506-3 OR EQUAL. HORIZONTAL LEADERS SHALL HAVE A 1/8" PER FT. SLOPE.

maurice gray associates, inc
consulting engineers
4080 laguna street
coral gables fl 33146
tel.(305) 444-5182

NO.	DATE	ISSUED FOR	BY
	9-11-1990	CHANGED AS LOTEPRO RECOMMENDED LCC (*)	

DESIGNED P.M.
DRAWN C.T.
CHECKED W.P.P.
PROJ. ENGR H.K.
P.E.

HAZEN AND SAWYER, P.C.
CONSULTING ENGINEERS - MIAMI, FLORIDA
-IN ASSOCIATION WITH-
POST, BUCKLEY, SCHUH & JERNIGAN, INC.
CONSULTING ENGINEERS & PLANNERS - MIAMI, FLORIDA

MIAMI-DADE WATER AND SEWER AUTHORITY DEPARTMENT
NORTH DISTRICT WASTEWATER TREATMENT PLANT EXPANSION - PHASE I
DADE COUNTY, FLORIDA

OXYGENATION TANK No.5
SECTIONS
DIVISION 38

CONTRACT NUMBER(S) S-348
EPA C-120375310
DATE NOV., 1988

DWG. S-9295-D
SHEET 134 OF 213
REF. NO. S-29

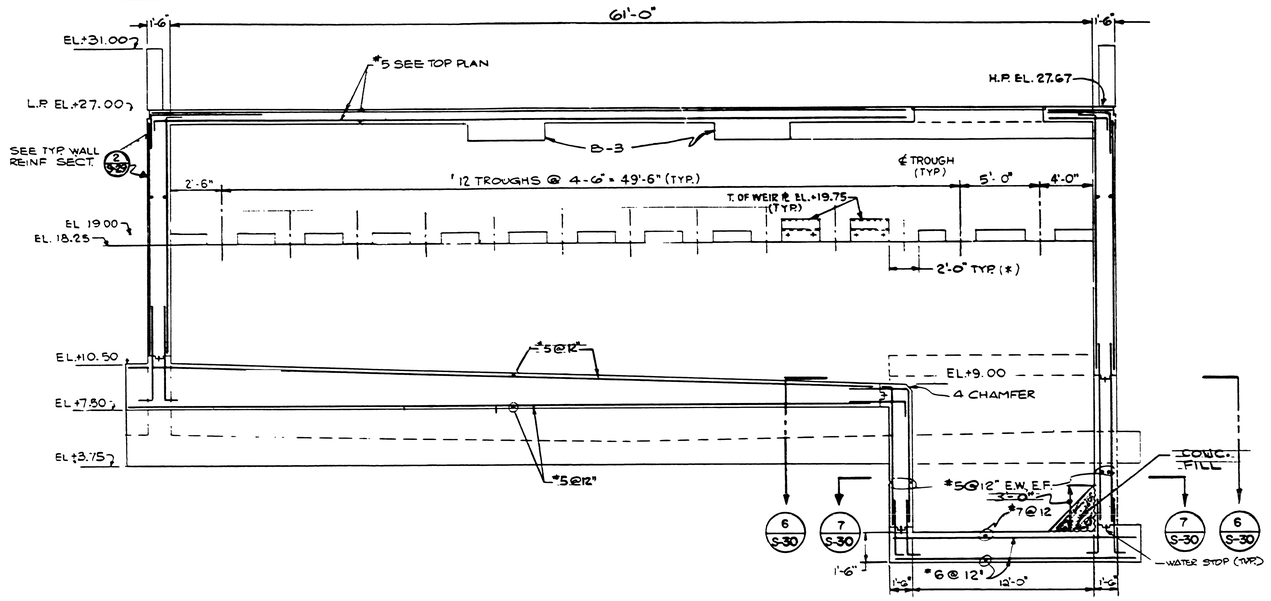

SECTION 3 / S-30
SCALE: 1/4" = 1'-0"

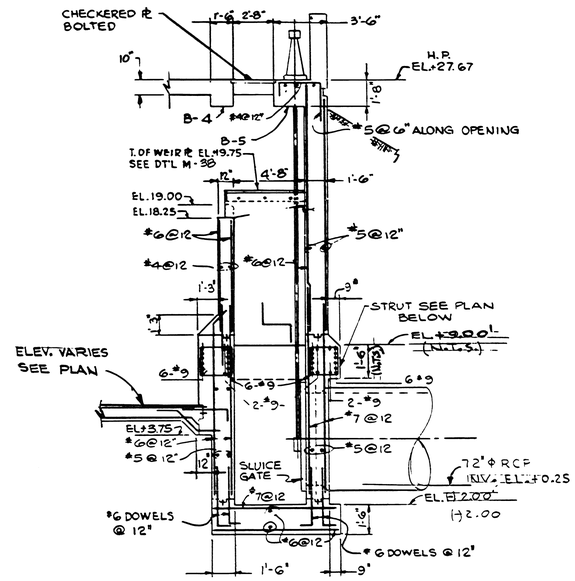

SECTION 5 / S-30
SCALE: 1/4" = 1'-0"

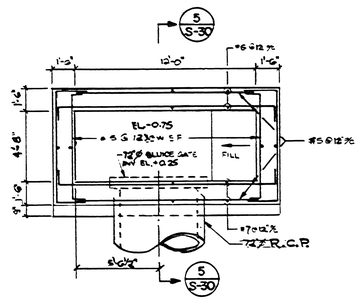

EFFLUENT
SECTIONAL PLAN 7 / S-30
SCALE: 1/4" = 1'-0"

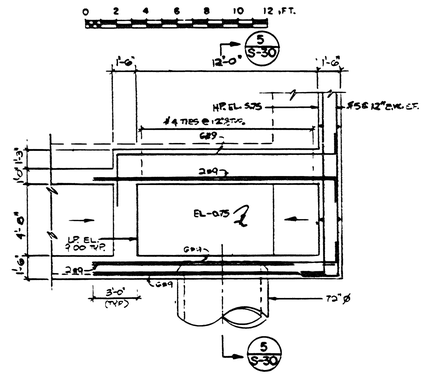

EFFLUENT
SECTIONAL PLAN 6 / S-30
SCALE: 1/4" = 1'-0"

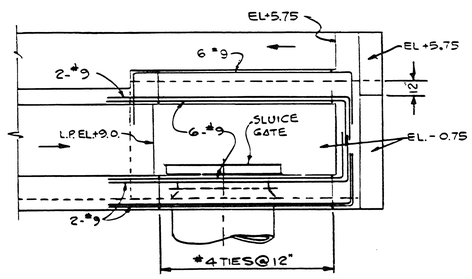

SECTIONAL PLAN 6 / S-30
SCALE: 1/4" = 1'-0"

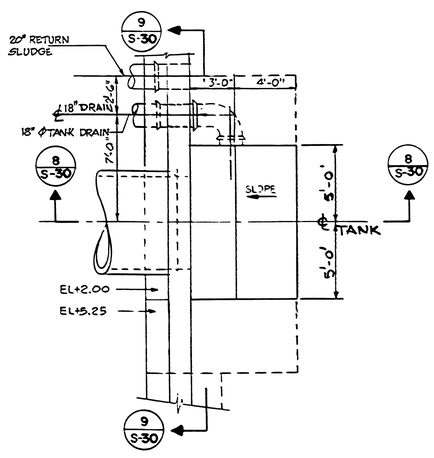

INFLUENT
SECTIONAL PLAN
SCALE: 1/4" = 1'-0"

NOTE: SEE PLAN DWGS S-28

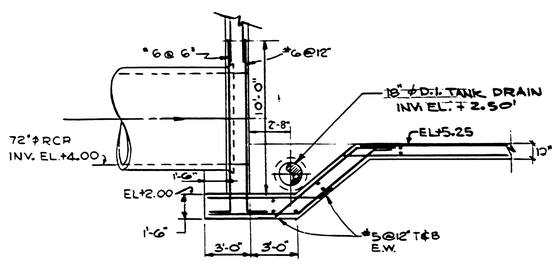

SECTION 8 / S-30
SCALE: 1/4" = 1'-0"

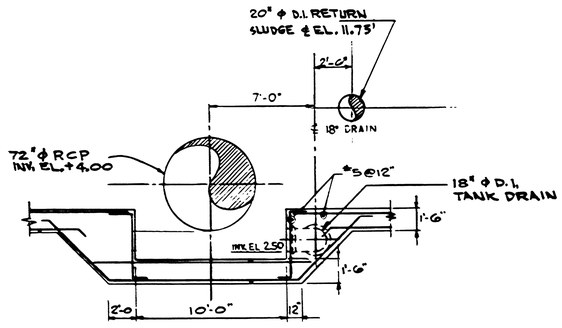

SECTION 9 / S-30
SCALE: 1/4" = 1'-0"

INFLUENT MANHOLES

AS-BUILT
THE POOLE & KENT COMPANY
maurice gray associates, inc
consulting engineers
4090 laguna street
coral gables fl. 33146
tel.(305) 444-5182

NO.	DATE	ISSUED FOR	BY

DESIGNED P.M.
DRAWN B.P.
CHECKED W.P.P.
PROJ. ENGR. H.K.
P.E.

HAZEN AND SAWYER, P.C.
CONSULTING ENGINEERS – MIAMI, FLORIDA
-IN ASSOCIATION WITH-
POST, BUCKLEY, SCHUH & JERNIGAN, INC.
CONSULTING ENGINEERS & PLANNERS – MIAMI, FLORIDA

MIAMI–DADE WATER AND SEWER AUTHORITY DEPARTMENT
NORTH DISTRICT WASTEWATER TREATMENT PLANT EXPANSION – PHASE I
DADE COUNTY, FLORIDA

OXYGENATION TANK No.5
SECTIONS
DIVISION 3B

CONTRACT NUMBER(S) S – 348
EPA C – 120375310
DATE NOV. 1988

DWG S-9298-D
SHEET 135 OF 213
REF. NO. S-30

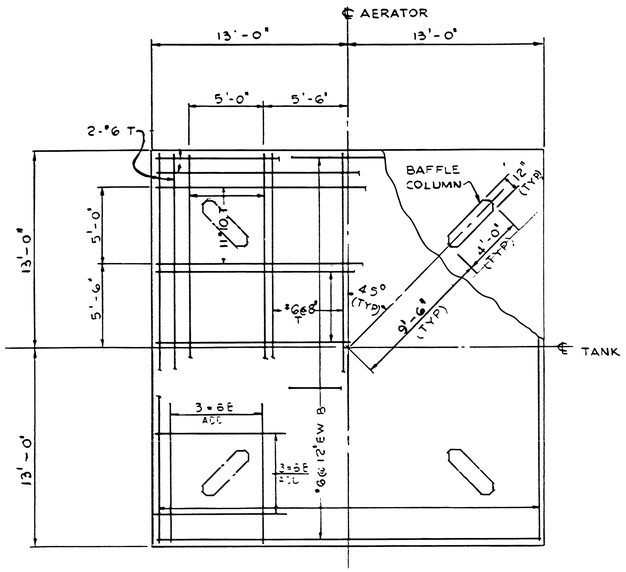

NOTE DIMENSIONS & REINFORCEMENT SYMMETRICAL ABOUT BOTH ℄

TYPE-1 FOOTING
SCALE: 1/4" = 1'-0"

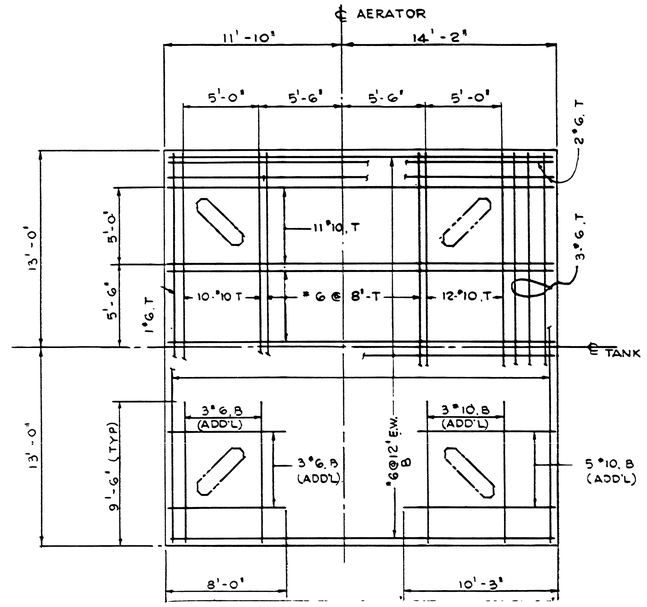

NOTE DIMENSIONS & REINFORCEMENT SYM. ABOUT ℄ TANK

TYPE-2 FOOTING
SCALE: 1/4" = 1'-0"

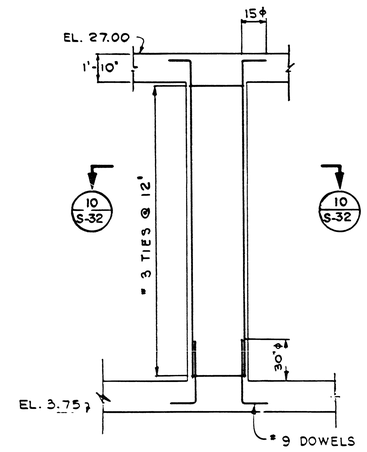

BAFFLE COLUMN
SCALE: 1/4" = 1'-0"

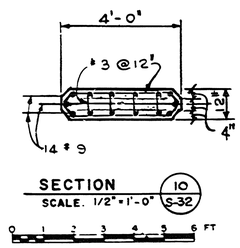

SECTION 10 S-32
SCALE: 1/2" = 1'-0"

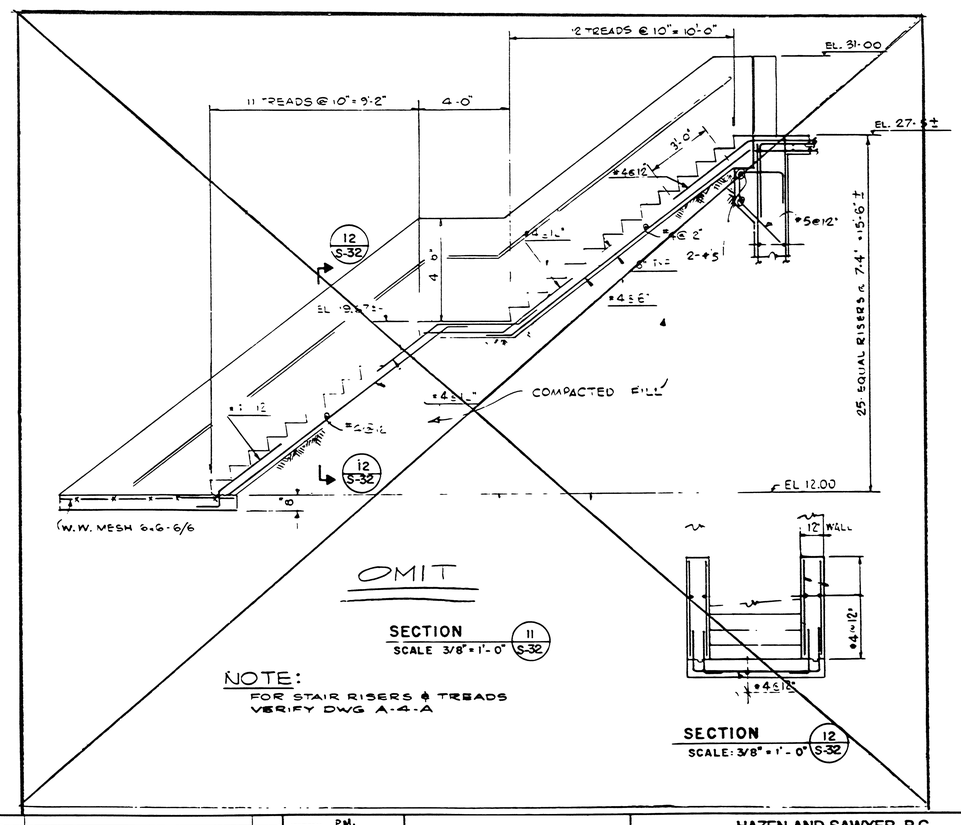

OMIT

SECTION 11 S-32
SCALE 3/8" = 1'-0"

NOTE:
FOR STAIR RISERS & TREADS
VERIFY DWG A-4-A

SECTION 12 S-32
SCALE: 3/8" = 1'-0"

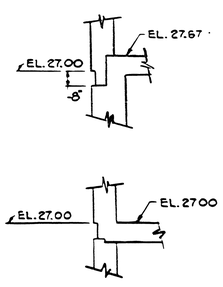

CONSTRUCTION JOINTS AT EXTERIOR WALLS
SCALE: 3/8" = 1'-0"

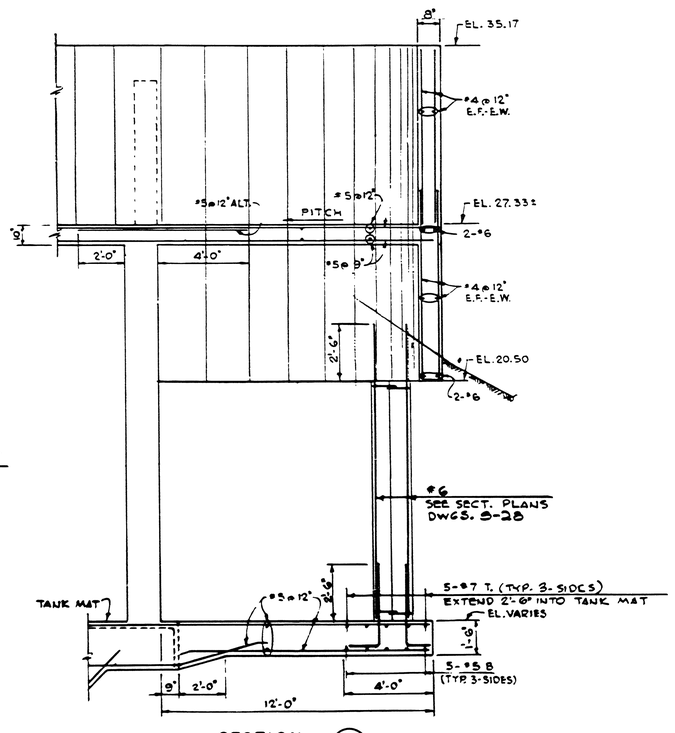

SECTION 13 S-32
3/8" = 1'-0"

AS-BUILT
THE POOLE & KENT COMPANY

maurice gray associates, inc
consulting engineers
4080 ingraham street
coral gables fl 33146
tel.(305) 444-5182

NO.	DATE	ISSUED FOR	BY

DESIGNED P.M.
DRAWN B.P.
CHECKED W.P.P.
PROJ. ENGR H.K.
P.E.

HAZEN AND SAWYER, P.C.
CONSULTING ENGINEERS – MIAMI, FLORIDA
-IN ASSOCIATION WITH-
POST, BUCKLEY, SCHUH & JERNIGAN, INC.
CONSULTING ENGINEERS & PLANNERS – MIAMI, FLORIDA

MIAMI–DADE WATER AND SEWER AUTHORITY DEPARTMENT
NORTH DISTRICT WASTEWATER TREATMENT PLANT EXPANSION – PHASE I
DADE COUNTY, FLORIDA

OXYGENATION TANK No.5
COLUMNS, BEAMS, & DETAILS
DIVISION 3B

CONTRACT NUMBER(S) S - 348
EPA C - 120376310
DATE NOV. 1988

DWG S-8298-D
SHEET 137 OF 213
REF. NO. S-32