MIAMI NORTH CORRIDOR FEIS

VOLUME II PART I

PRELIMINARY ENGINEERING DRAWINGS

FINAL ENVIRONMENTAL IMPACT STATEMENT

FEBRUARY 2007

MIAMI-DADE COUNTY TRANSIT

LOCALLY PREFERRED ALTERNATIVE

MIAMI-DADE COUNTY

MIAMI-DADE
TRANSIT

NORTH CORRIDOR METRORAIL EXTENSION PROJECT
PRELIMINARY ENGINEERING
CONTRACT NO. TR05-NCPE

100% SUBMITTAL OF THE PRELIMINARY ENGINEERING PLANS

VOLUME I OF II

PLANS INCLUDE:

GENERAL, TRACK, CURVE DATA, ROADWAY, REAL ESTATE ACQUISITION, UTILITY AND DRAINAGE,

STRUCTURES-GUIDEWAY, BORING PLANS, TRAFFIC CONTROL, SIGNING AND PAVEMENT MARKINGS AND ROADWAY- SIGNALS PLANS

SUBJECT TO CHANGE

KJ Designed by	5-06 Date						NORTH CORRIDOR METRORAIL EXTENSION - PRELIMINARY ENGINEERING (100% SUBMITTAL)	GENERAL
KJ Drawn by	5-06 Date						MIAMI-DADE COUNTY MIAMI-DADE TRANSIT	KEY SHEET
JE Checked by	5-06 Date						PARSONS 7600 CORPORATE CENTER DRIVE, SUITE 500 MIAMI, FLORIDA 33126 PHONE: (786) 464-1000 FAX: (786) 845-7119 CERTIFICATE OF AUTHORIZATION NO. 1838	
Approved by	Date	No.	Date	By / Chk	App.	Revisions	Approved / Date	Approved / Date
								Scale NTS · Drawing GEN - 01 · Sheet

05/11/2006 04:19:53 PM s:\mdt_north\index_sheets\gen-01.dgn

NOTES TO REVIEWER

1. THE ENCLOSED PLANS REPRESENT 100% COMPLETION OF THE OVERALL PRELIMINARY ENGINEERING PACKAGE.

2. THE PLANS ARE DIVIDED INTO TWO (2) VOLUMES:

   a. VOLUME I CONTAINS: GENERAL, TRACK, CURVE DATA, ROADWAY, REAL ESTATE ACQUISITION, UTILITY AND DRAINAGE, STRUCTURES-GUIDEWAY, BORING PLANS, TRAFFIC CONTROL, SIGNING AND PAVEMENT MARKINGS, AND ROADWAY- SIGNALS PLANS.

   b. THE VOLUME II CONTAINS: GENERAL, PASSENGER STATIONS, STRUCTURES-STATION, LANDSCAPE, ELECTRICAL, MECHANICAL, PLUMBING, FIRE PROTECTION, SYSTEMS-COMMUNICATION, TRACTION POWER, TRAIN CONTROL, AND CORROSION CONTROL.

   THE 100% PLANS HAVE BEEN REPACKAGED FROM THE 70%. THE REPACKAGING WAS DONE SO THAT VOLUME I CAN BE INCLUDED IN WITH THE FEIS PACKAGE, WITHOUT THE NEED FOR THE OTHER DETAIL PLANS INCLUDED IN VOLUME II.

3. A DECISION ON THE TWO (2) ALIGNMENT OPTIONS ((1) FLYOVER CROSSING OPTION AND (2) LEVEL CROSSING OPTION) PRESENTED IN THE 70% HAS BEEN DECIDED UPON. THE OPTION BEING TAKEN THROUGH THE FINAL DESIGN IS THE FLYOVER OPTION WHICH IS INCLUDED IN THE 100% PLANS.

4. A DECISION ON THE TWO (2) STRUCTURAL OPTIONS SHOWN IN THE 70% PLANS HAS BEEN DECIDED UPON. THE ENCLOSED STRUCTURAL PLANS HAVE TAKEN THE PRECAST POST-TENSIONED SEGMENTAL CONCRETE BOX GIRDER OPTION THROUGH TO FINAL PRELIMINARY ENGINEERING. ALL OTHER PLANS IN THE PLAN SET ARE REFERENCING THE CONCRETE BOX GIRDER PIER LOCATIONS FOR COORDINATION.

5. THE TRACTION POWER PLANS HAVE BEEN UPDATED FROM THE 70% BASED ON NEW CRITERIA AND DESIGN DIRECTION. THE NUMBER OF SUBSTATIONS HAVE BEEN REDUCED FROM 16-2.5 MW TO 10-5 MW. REFER TO THE TRACTION POWER PLANS FOR DETAILS AS WELL AS THE TRACK PLAN AND PROFILES FOR TENTATIVE LOCATIONS ALONG THE ALIGNMENT.

6. THE STATION PLATFORM AND TRACKWORK AT THE 215TH STREET STATION HAS CHANGED FROM THE 70% DUE TO THE NEED FOR VEHICLE STORAGE IN THE TAIL TRACK AS WELL AS A LIGHT MAINTENANCE TRACK. THE SHIFT IN THE STATION WAS APPROXIMATLY 300-FT SOUTH OF WHERE IT WAS SHOWN IN THE 70% PLANS. PLEASE SEE PLANS FOR RELATED CHANGES.

KJ Designed by	5-06 Date						
KJ Drawn by	5-06 Date						
JE Checked by	5-06 Date						
Approved by	Date	No.	Date	By / Chk.	App.	Revisions	

NORTH CORRIDOR METRORAIL EXTENSION - PRELIMINARY ENGINEERING (100% SUBMITTAL)

MIAMI-DADE COUNTY

MIAMI-DADE TRANSIT

PARSONS
7600 CORPORATE CENTER DRIVE, SUITE 500
MIAMI, FLORIDA 33126
PHONE: (786) 464-1000 FAX: (786) 845-7119
CERTIFICATE OF AUTHORIZATION NO. 1838

Approved | Date | Approved | Date

GENERAL

NOTES TO REVIEWER

Scale N.T.S. | Drawing GEN-02 | Sheet 2

05/15/2006 02:54:48 PM

GENERAL

SHEET NO.	DWG NO.	SHEET DESCRIPTION
1	GEN-01	KEY SHEET
2	GEN-02	NOTES TO REVIEWER
3	GEN-03	INDEX OF DRAWINGS
4	GEN-04	INDEX OF DRAWINGS
5	GEN-05	INDEX OF DRAWINGS
6	GEN-06	INDEX OF DRAWINGS
7	GEN-07	INDEX OF DRAWINGS
8	GEN-08	INDEX OF DRAWINGS
9	GEN-09	GENERAL NOTES
10	GEN-10	STANDARD ABBREVIATIONS AND SYMBOLS
11	GEN-11	GEOMETRY ABBREVIATIONS
12	GEN-12	KEY MAP-PLAN AND PROFILE (TRACK ALIGNMENT)

TRACK

SHEET NO.	DWG NO.	SHEET DESCRIPTION
13	TK-000	PLAN AND PROFILE
14	TK-001	PLAN AND PROFILE
15	TK-002	PLAN AND PROFILE
16	TK-003	PLAN AND PROFILE
17	TK-004	PLAN AND PROFILE
18	TK-005	PLAN AND PROFILE
19	TK-006	PLAN AND PROFILE
20	TK-007	PLAN AND PROFILE
21	TK-008	PLAN AND PROFILE
22	TK-009	PLAN AND PROFILE
23	TK-010	PLAN AND PROFILE
24	TK-011	PLAN AND PROFILE
25	TK-012	PLAN AND PROFILE
26	TK-013	PLAN AND PROFILE
27	TK-014	PLAN AND PROFILE
28	TK-015	PLAN AND PROFILE
29	TK-016	PLAN AND PROFILE
30	TK-017	PLAN AND PROFILE
31	TK-018	PLAN AND PROFILE
32	TK-019	PLAN AND PROFILE
33	TK-020	PLAN AND PROFILE
34	TK-021	PLAN AND PROFILE
35	TK-022	PLAN AND PROFILE
36	TK-023	PLAN AND PROFILE
37	TK-024	PLAN AND PROFILE
38	TK-025	PLAN AND PROFILE
39	TK-026	PLAN AND PROFILE
40	TK-027	PLAN AND PROFILE
41	TK-028	PLAN AND PROFILE
42	TK-029	PLAN AND PROFILE
43	TK-030	PLAN AND PROFILE
44	TK-031	PLAN AND PROFILE
45	TK-032	PLAN AND PROFILE
46	TK-033	PLAN AND PROFILE
47	TK-034	PLAN AND PROFILE
48	TK-035	PLAN AND PROFILE
49	TK-036	PLAN AND PROFILE

CURVE DATA AND COORDINATES

SHEET NO.	DWG NO.	SHEET DESCRIPTION
50	TK-101	NORTHBOUND TRACK DATA-SHEET (1 OF 4)
51	TK-102	NORTHBOUND TRACK DATA-SHEET (2 OF 4)
52	TK-103	NORTHBOUND TRACK DATA-SHEET (3 OF 4)
53	TK-104	NORTHBOUND TRACK DATA-SHEET (4 OF 4)
54	TK-105	SOUTHBOUND TRACK DATA-SHEET (1 OF 4)
55	TK-106	SOUTHBOUND TRACK DATA-SHEET (2 OF 4)
56	TK-107	SOUTHBOUND TRACK DATA-SHEET (3 OF 4)
57	TK-108	SOUTHBOUND TRACK DATA-SHEET (4 OF 4)
58	TK-109	SPECIAL TRACK DATA-SHEET (1 OF 2)
59	TK-110	SPECIAL TRACK DATA-SHEET (2 OF 2)
60	TK-111	TRACK SCHEMATIC

ROADWAY

SHEET NO.	DWG NO.	SHEET DESCRIPTION
61	RWP-01	GENERAL NOTES
62	RWP-02	GENERAL NOTES
63	RWP-03	TYPICAL SECTIONS
64	RWP-04	TYPICAL SECTIONS
65	RWP-05	TYPICAL SECTIONS
66	RWP-06	TYPICAL SECTIONS
67	RWP-07	TYPICAL SECTIONS
68	RWP-08	TYPICAL SECTIONS
69	RWP-09	TYPICAL SECTIONS
70	RWP-10	TYPICAL SECTIONS
71	RWP-11	TYPICAL SECTIONS
72	RWP-12	TYPICAL SECTIONS
73	RWP-13	TYPICAL SECTIONS
74	RWP-14	TYPICAL SECTIONS
75	RWP-15	TYPICAL SECTIONS
76	RWP-16	TYPICAL SECTIONS
77	RWP-17	TYPICAL SECTIONS
78	RWP-18	TYPICAL SECTIONS
79	RWP-19	TYPICAL SECTIONS
80	RWP-20	TYPICAL SECTIONS
81	RWP-21	TYPICAL SECTIONS
82	RWP-22	TYPICAL SECTIONS
83	RWP-23	ROADWAY PLANS
84	RWP-24	ROADWAY PLANS
85	RWP-25	ROADWAY PLANS
86	RWP-26	ROADWAY PLANS
87	RWP-27	ROADWAY PLANS
88	RWP-28	ROADWAY PLANS
89	RWP-29	ROADWAY PLANS
90	RWP-30	ROADWAY PLANS
91	RWP-31	ROADWAY PLANS

SUBJECT TO CHANGE

KJ Designed by	5-06 Date						
KJ Drawn by	5-06 Date						
JE Checked by	5-06 Date						
Approved by	Date	No.	Date	By / Chk	App.	Revisions	

NORTH CORRIDOR METRORAIL EXTENSION - PRELIMINARY ENGINEERING (100% SUBMITTAL)

MIAMI-DADE COUNTY

MIAMI-DADE TRANSIT

PARSONS
7600 CORPORATE CENTER DRIVE, SUITE 500
MIAMI, FLORIDA 33126
PHONE: (786) 464-1000 FAX: (786) 845-7119
CERTIFICATE OF AUTHORIZATION NO. 1838

Approved	Date	Approved	Date

GENERAL

INDEX OF DRAWINGS

Scale	Drawing	Sheet
N.T.S.	GEN-03	3

05/16/2006 09:24:05 AM

ROADWAY -(CONT.)

SHEET NO.	DWG NO.	SHEET DESCRIPTION
92	RWP-32	ROADWAY PLANS
93	RWP-33	ROADWAY PLANS
94	RWP-34	ROADWAY PLANS
95	RWP-35	ROADWAY PLANS
96	RWP-36	ROADWAY PLANS
97	RWP-37	ROADWAY PLANS
98	RWP-38	ROADWAY PLANS
99	RWP-39	ROADWAY PLANS
100	RWP-40	ROADWAY PLANS
101	RWP-41	ROADWAY PLANS
102	RWP-42	ROADWAY PLANS
103	RWP-43	ROADWAY PLANS
104	RWP-44	ROADWAY PLANS
105	RWP-45	ROADWAY PLANS
106	RWP-46	ROADWAY PLANS
107	RWP-47	ROADWAY PLANS
108	RWP-48	ROADWAY PLANS
109	RWP-49	ROADWAY PLANS
110	RWP-50	ROADWAY PLANS
111	RWP-51	ROADWAY PLANS
112	RWP-52	ROADWAY PLANS
113	RWP-53	ROADWAY PLANS
114	RWP-54	ROADWAY PLANS
115	RWP-55	ROADWAY PLANS
116	RWP-56	ROADWAY PLANS
117	RWP-57	ROADWAY PLANS
118	RWP-58	ROADWAY PLANS

REAL ESTATE ACQUISITION

SHEET NO.	DWG NO.	SHEET DESCRIPTION
119	REA-00	PARCEL PLANS
120	REA-01	PARCEL PLANS
121	REA-02	PARCEL PLANS
122	REA-03	PARCEL PLANS
123	REA-04	PARCEL PLANS
124	REA-05	PARCEL PLANS
125	REA-06	PARCEL PLANS
126	REA-07	PARCEL PLANS
127	REA-08	PARCEL PLANS
128	REA-09	PARCEL PLANS
129	REA-10	PARCEL PLANS
130	REA-11	PARCEL PLANS
131	REA-12	PARCEL PLANS
132	REA-13	PARCEL PLANS
133	REA-14	PARCEL PLANS
134	REA-15	PARCEL PLANS
135	REA-16	PARCEL PLANS
136	REA-17	PARCEL PLANS
137	REA-18	PARCEL PLANS
138	REA-19	PARCEL PLANS
139	REA-20	PARCEL PLANS
140	REA-21	PARCEL PLANS
141	REA-22	PARCEL PLANS
142	REA-23	PARCEL PLANS
143	REA-24	PARCEL PLANS
144	REA-25	PARCEL PLANS
145	REA-26	PARCEL PLANS
146	REA-27	PARCEL PLANS
147	REA-28	PARCEL PLANS
148	REA-29	PARCEL PLANS
149	REA-30	PARCEL PLANS
150	REA-31	PARCEL PLANS
151	REA-32	PARCEL PLANS
152	REA-33	PARCEL PLANS
153	REA-34	PARCEL PLANS
154	REA-35	PARCEL PLANS
155	REA-36	PARCEL PLANS
156	REA-37	PARCEL PLANS

UTILITY AND DRAINAGE PLANS

SHEET NO.	DWG NO.	SHEET DESCRIPTION
157	UDP-00	KEY MAP
158	UDP-01	UTILITY RELOCATION AND DRAINAGE PLANS
159	UDP-02	UTILITY RELOCATION AND DRAINAGE PLANS
160	UDP-03	UTILITY RELOCATION AND DRAINAGE PLANS
161	UDP-04	UTILITY RELOCATION AND DRAINAGE PLANS
162	UDP-05	UTILITY RELOCATION AND DRAINAGE PLANS
163	UDP-06	UTILITY RELOCATION AND DRAINAGE PLANS
164	UDP-07	UTILITY RELOCATION AND DRAINAGE PLANS
165	UDP-08	UTILITY RELOCATION AND DRAINAGE PLANS
166	UDP-09	UTILITY RELOCATION AND DRAINAGE PLANS
167	UDP-10	UTILITY RELOCATION AND DRAINAGE PLANS
168	UDP-11	UTILITY RELOCATION AND DRAINAGE PLANS
169	UDP-12	UTILITY RELOCATION AND DRAINAGE PLANS
170	UDP-13	UTILITY RELOCATION AND DRAINAGE PLANS
171	UDP-14	UTILITY RELOCATION AND DRAINAGE PLANS
172	UDP-15	UTILITY RELOCATION AND DRAINAGE PLANS
173	UDP-16	UTILITY RELOCATION AND DRAINAGE PLANS
174	UDP-17	UTILITY RELOCATION AND DRAINAGE PLANS
175	UDP-18	UTILITY RELOCATION AND DRAINAGE PLANS
176	UDP-19	UTILITY RELOCATION AND DRAINAGE PLANS
177	UDP-20	UTILITY RELOCATION AND DRAINAGE PLANS
178	UDP-21	UTILITY RELOCATION AND DRAINAGE PLANS
179	UDP-22	UTILITY RELOCATION AND DRAINAGE PLANS

SUBJECT TO CHANGE

KJ 5-06 Designed by Date
KJ 5-06 Drawn by Date
JE 5-06 Checked by Date
Approved by Date

No.	Date	By / Chk	App.	Revisions

NORTH CORRIDOR METRORAIL EXTENSION - PRELIMINARY ENGINEERING (100% SUBMITTAL)

GENERAL

MIAMI-DADE COUNTY

MIAMI-DADE TRANSIT

PARSONS
7600 CORPORATE CENTER DRIVE, SUITE 500
MIAMI, FLORIDA 33126
PHONE: (786) 464-1000 FAX: (786) 845-7119
CERTIFICATE OF AUTHORIZATION NO. 1838

Approved Date

Approved Date

INDEX OF DRAWINGS

Scale N.T.S. Drawing GEN-04 Sheet 4

05/16/2006 09:24:17 AM s:\mdt_north\index sheets\gen-03.dgn

UTILITY AND DRAINAGE PLANS (CONT.)

SHEET NO.	DWG NO.	SHEET DESCRIPTION
180	UDP-23	UTILITY RELOCATION AND DRAINAGE PLANS
181	UDP-24	UTILITY RELOCATION AND DRAINAGE PLANS
182	UDP-25	UTILITY RELOCATION AND DRAINAGE PLANS
183	UDP-26	UTILITY RELOCATION AND DRAINAGE PLANS
184	UDP-27	UTILITY RELOCATION AND DRAINAGE PLANS
185	UDP-28	UTILITY RELOCATION AND DRAINAGE PLANS
186	UDP-29	UTILITY RELOCATION AND DRAINAGE PLANS
187	UDP-30	UTILITY RELOCATION AND DRAINAGE PLANS
188	UDP-31	UTILITY RELOCATION AND DRAINAGE PLANS
189	UDP-32	UTILITY RELOCATION AND DRAINAGE PLANS
190	UDP-33	UTILITY RELOCATION AND DRAINAGE PLANS
191	UDP-34	UTILITY RELOCATION AND DRAINAGE PLANS
192	UDP-35	UTILITY RELOCATION AND DRAINAGE PLANS
193	UDP-36	UTILITY RELOCATION AND DRAINAGE PLANS
194	UDP-37	UTILITY RELOCATION AND DRAINAGE PLANS
195	UDP-38	NW 82ND STREET STATION
196	UDP-39	NW119TH STREET (MDCC) STATION
197	UDP-40	ALI BABA AVENUE STATION
198	UDP-41	NW 163RD STREET STATION
199	UDP-41A	NW 163RD STREET STATION
200	UDP-42	NW 183RD STREET STATION
201	UDP-43	NW 199TH STREET STATION
202	UDP-44	NW 215TH STREET STATION
203	UDP-45	NW 215TH STREET STATION
204	UDP-46	UTILITY AND DRAINAGE DETAILS
205	UDP-47	UTILITY AND DRAINAGE DETAILS
206	UDP-48	UTILITY AND DRAINAGE DETAILS
207	UDP-49	UTILITY AND DRAINAGE DETAILS
208	UDP-50	UTILITY AND DRAINAGE DETAILS
209	UDP-51	UTILITY AND DRAINAGE DETAILS
210	UDP-52	ELECTRICAL DETAILS
211	UDP-53	DRAINAGE STRUCTURE INDEX

STRUCTURAL- GUIDEWAY (CONCRETE)

SHEET NO.	DWG NO.	SHEET DESCRIPTION
212	SGC-1	GENERAL NOTES
213	SGC-2	GENERAL PLAN AND ELEVATION 1
214	SGC-3	GENERAL PLAN AND ELEVATION 2
215	SGC-4	GENERAL PLAN AND ELEVATION 3
216	SGC-5	GENERAL PLAN AND ELEVATION 4
217	SGC-6	GENERAL PLAN AND ELEVATION 5
218	SGC-7	GENERAL PLAN AND ELEVATION 6
219	SGC-8	GENERAL PLAN AND ELEVATION 7
220	SGC-9	GENERAL PLAN AND ELEVATION 8
221	SGC-10	GENERAL PLAN AND ELEVATION 9
222	SGC-11	GENERAL PLAN AND ELEVATION 10
223	SGC-12	GENERAL PLAN AND ELEVATION 11
224	SGC-13	GENERAL PLAN AND ELEVATION 12
225	SGC-14	GENERAL PLAN AND ELEVATION 13
226	SGC-15	GENERAL PLAN AND ELEVATION 14
227	SGC-16	GENERAL PLAN AND ELEVATION 15
228	SGC-17	GENERAL PLAN AND ELEVATION 16
229	SGC-18	GENERAL PLAN AND ELEVATION 17
230	SGC-19	GENERAL PLAN AND ELEVATION 18
231	SGC-20	GENERAL PLAN AND ELEVATION 19
232	SGC-21	GENERAL PLAN AND ELEVATION 20
233	SGC-22	GENERAL PLAN AND ELEVATION 21
234	SGC-23	GENERAL PLAN AND ELEVATION 22
235	SGC-24	GENERAL PLAN AND ELEVATION 23
236	SGC-25	GENERAL PLAN AND ELEVATION 24
237	SGC-26	GENERAL PLAN AND ELEVATION 25
238	SGC-27	GENERAL PLAN AND ELEVATION 26
239	SGC-28	GENERAL PLAN AND ELEVATION 27
240	SGC-29	GENERAL PLAN AND ELEVATION 28
241	SGC-30	GENERAL PLAN AND ELEVATION 29
242	SGC-31	GENERAL PLAN AND ELEVATION 30

SHEET NO.	DWG NO.	SHEET DESCRIPTION
243	SGC-32	GENERAL PLAN AND ELEVATION 31
244	SGC-33	GENERAL PLAN AND ELEVATION 32
245	SGC-34	GENERAL PLAN AND ELEVATION 33
246	SGC-35	GENERAL PLAN AND ELEVATION 34
247	SGC-36	GENERAL PLAN AND ELEVATION 35
248	SGC-37	GENERAL PLAN AND ELEVATION 36
249	SGC-38	GENERAL PLAN AND ELEVATION 37
250	SGC-39	GENERAL PLAN AND ELEVATION 38
251	SGC-40	GENERAL PLAN AND ELEVATION 39
252	SGC-41	GENERAL PLAN AND ELEVATION 40
253	SGC-42	GENERAL PLAN AND ELEVATION 41
254	SGC-43	GENERAL PLAN AND ELEVATION 42
255	SGC-44	GENERAL PLAN AND ELEVATION 43
256	SGC-45	GENERAL PLAN AND ELEVATION 44
257	SGC-46	GENERAL PLAN AND ELEVATION 45
258	SGC-47	GENERAL PLAN AND ELEVATION 46
259	SGC-48	GENERAL PLAN AND ELEVATION 47
260	SGC-49	GENERAL PLAN AND ELEVATION 48
261	SGC-50	GENERAL PLAN AND ELEVATION 49
262	SGC-51	GENERAL PLAN AND ELEVATION 50
263	SGC-52	GENERAL PLAN AND ELEVATION 51
264	SGC-53	GENERAL PLAN AND ELEVATION 52
265	SGC-54	GENERAL PLAN AND ELEVATION 53
266	SGC-55	GENERAL PLAN AND ELEVATION 54
267	SGC-56	GENERAL PLAN AND ELEVATION 55
268	SGC-57	GENERAL PLAN AND ELEVATION 56
269	SGC-58	GENERAL PLAN AND ELEVATION 57
270	SGC-59	GENERAL PLAN AND ELEVATION 58
271	SGC-60	GENERAL PLAN AND ELEVATION 59
272	SGC-61	GENERAL PLAN AND ELEVATION 60
273	SGC-62	GENERAL PLAN AND ELEVATION 61
274	SGC-63	GENERAL PLAN AND ELEVATION 62

SUBJECT TO CHANGE

KJ Designed by	5-06 Date				
KJ Drawn by	5-06 Date				
JE Checked by	5-06 Date				
Approved by	Date	No.	Date	By / Chk	App.	Revisions

NORTH CORRIDOR METRORAIL EXTENSION - PRELIMINARY ENGINEERING (100% SUBMITTAL)

GENERAL

MIAMI-DADE COUNTY

MIAMI-DADE TRANSIT

PARSONS
7600 CORPORATE CENTER DRIVE, SUITE 500
MIAMI, FLORIDA 33126
PHONE: (786) 464-1000 FAX: (786) 845-7119
CERTIFICATE OF AUTHORIZATION NO. 1638

Approved | Date | Approved | Date

INDEX OF DRAWINGS

Scale N.T.S. | Drawing GEN-05 | Sheet 5

05/16/2006 08:24:19 AM

STRUCTURAL- GUIDEWAY (CONCRETE) CONT.

SHEET NO.	DWG NO.	SHEET DESCRIPTION
275	SGC-64	GENERAL PLAN AND ELEVATION 63
276	SGC-65	GENERAL PLAN AND ELEVATION 64
277	SGC-66	GENERAL PLAN AND ELEVATION 65
278	SGC-67	GENERAL PLAN AND ELEVATION 66
279	SGC-68	GENERAL PLAN AND ELEVATION 67
280	SGC-69	GENERAL PLAN AND ELEVATION 68
281	SGC-70	GENERAL PLAN AND ELEVATION 69
282	SGC-71	GENERAL PLAN AND ELEVATION 70
283	SGC-72	GENERAL PLAN AND ELEVATION 71
284	SGC-73	GENERAL PLAN AND ELEVATION 72
285	SGC-74	GENERAL PLAN AND ELEVATION 73
286	SGC-75	TYPICAL CROSS-SECTIONS - FLYOVER CROSSING
287	SGC-76	TYPICAL CROSS-SECTION - DUAL TRACK GUIDEWAY
288	SGC-77	TYPICAL CROSS-SECTION - SINGLE TRACK GUIDEWAY
289	SGC-78	TYPICAL CROSS-SECTION - POCKET TRACK GUIDEWAY
290	SGC-79	TYPICAL CROSS-SECTION - CROSSOVER TRACK GUIDEWAY
291	SGC-80	TYPICAL CROSS-SECTION - SHOP TRACK GUIDEWAY
292	SGC-81	FOUNDATION LAYOUT 1
293	SGC-82	FOUNDATION LAYOUT 2
294	SGC-83	FOUNDATION LAYOUT 3
295	SGC-84	FOUNDATION LAYOUT 4
296	SGC-85	FOUNDATION LAYOUT 5
297	SGC-86	FOUNDATION LAYOUT 6
298	SGC-87	FOUNDATION LAYOUT 7
299	SGC-88	FOUNDATION LAYOUT 8
300	SGC-89	FOUNDATION LAYOUT 9
301	SGC-90	FOUNDATION LAYOUT 10
302	SGC-91	FOUNDATION LAYOUT 11
303	SGC-92	FOUNDATION LAYOUT 12
304	SGC-93	FOUNDATION LAYOUT 13
305	SGC-94	FOUNDATION LAYOUT 14
306	SGC-95	FOUNDATION LAYOUT 15
307	SGC-96	FOUNDATION LAYOUT 16
308	SGC-97	FOUNDATION LAYOUT 17
309	SGC-98	FOUNDATION LAYOUT 18
310	SGC-99	FOUNDATION LAYOUT 19
311	SGC-100	FOUNDATION LAYOUT 20
312	SGC-101	FOUNDATION LAYOUT 21
313	SGC-102	FOUNDATION LAYOUT 22
314	SGC-103	FOUNDATION LAYOUT 23
315	SGC-104	FOUNDATION LAYOUT 24
316	SGC-105	FOUNDATION LAYOUT 25
317	SGC-106	FOUNDATION LAYOUT 26
318	SGC-107	FOUNDATION LAYOUT 27
319	SGC-108	FOUNDATION LAYOUT 28
320	SGC-109	FOUNDATION LAYOUT 29
321	SGC-110	FOUNDATION LAYOUT 30
322	SGC-111	FOUNDATION LAYOUT 31
323	SGC-112	FOUNDATION LAYOUT 32
324	SGC-113	FOUNDATION LAYOUT 33
325	SGC-114	FOUNDATION LAYOUT 34
326	SGC-115	FOUNDATION LAYOUT 35
327	SGC-116	FOUNDATION LAYOUT 36
328	SGC-117	FOUNDATION LAYOUT 37
329	SGC-118	TYPE 1 PIER DIMENSIONS
330	SGC-119	TYPE 2 PIER DIMENSIONS
331	SGC-120	TRANSITION PIER DIMENSIONS
332	SGC-121	T-PIER DIMENSIONS
333	SGC-122	CANTILEVER PIER DIMENSIONS
334	SGC-123	TYPE 1 STRADDLE BENT DIMENSIONS AND P.T.1
335	SGC-124	TYPE 1 STRADDLE BENT DIMENSIONS AND P.T.2
336	SGC-125	TYPE 2 STRADDLE BENT DIMENSIONS AND P.T.1
337	SGC-126	TYPE 2 STRADDLE BENT DIMENSIONS AND P.T.2
338	SGC-127	TYPE 3 STRADDLE BENT DIMENSIONS AND P.T.1
339	SGC-128	TYPE 3 STRADDLE BENT DIMENSIONS AND P.T.2
340	SGC-129	TYPE 4 STRADDLE BENT DIMENSIONS AND P.T. 1
341	SGC-130	TYPE 4 STRADDLE BENT DIMENSIONS AND P.T.2
342	SGC-131	TYPE 5 STRADDLE BENT DIMENSIONS AND P.T.1
343	SGC-132	TYPE 5 STRADDLE BENT DIMENSIONS AND P.T.2
344	SGC-133	BEARING DETAILS
345	SGC-134	TYPICAL SEGMENT DIMENSIONS DUAL TRACK GUIDEWAY
346	SGC-135	DEVIATION SEGMENT DIMENSIONS DUAL TRACK GUIDEWAY
347	SGC-136	EXPANSION JOINT SEGMENT DIMENSIONS DUAL TRACK GUIDEWAY
348	SGC-137	PIER SEGMENT DIMENSIONS DUAL TRACK GUIDEWAY
349	SGC-138	TYPICAL SEGMENT DIMENSIONS SINGLE TRACK GUIDEWAY
350	SGC-139	DEVIATION SEGMENT DIMENSIONS SINGLE TRACK GUIDEWAY
351	SGC-140	EXPANSION JOINT SEGMENT DIMENSIONS SINGLE TRACK GUIDEWAY
352	SGC-141	PIER SEGMENT DIMENSIONS SINGLE TRACK GUIDEWAY
353	SGC-142	TRANSVERSE P.T. DETAILS
354	SGC-143	BULKHEAD AND SHEAR KEY DETAILS DUAL TRACK GUIDEWAY
355	SGC-144	BULKHEAD AND SHEAR KEY DETAILS SINGLE TRACK GUIDEWAY
356	SGC-145	95'-0" SPAN P.T. LAYOUT DUAL TRACK GUIDEWAY
357	SGC-146	105'-0" SPAN P.T. LAYOUT DUAL TRACK GUIDEWAY
358	SGC-147	115'-0" SPAN P.T. LAYOUT DUAL TRACK GUIDEWAY
359	SGC-148	125'-0" SPAN P.T. LAYOUT DUAL TRACK GUIDEWAY
360	SGC-149	135'-0" SPAN P.T. LAYOUT DUAL TRACK GUIDEWAY
361	SGC-150	CONTINUOUS UNIT TYPE 1 P.T. LAYOUT 1 DUAL TRACK GUIDEWAY
362	SGC-151	CONTINUOUS UNIT TYPE 1 P.T. LAYOUT 2 DUAL TRACK GUIDEWAY
363	SGC-152	CONTINUOUS UNIT TYPE 1a P.T. LAYOUT 1 DUAL TRACK GUIDEWAY
364	SGC-153	CONTINUOUS UNIT TYPE 1a P.T. LAYOUT 2 DUAL TRACK GUIDEWAY
365	SGC-154	CONTINUOUS UNIT TYPE 1a P.T. LAYOUT 3 DUAL TRACK GUIDEWAY
366	SGC-155	CONTINUOUS UNIT TYPE 1b P.T. LAYOUT 1 DUAL TRACK GUIDEWAY
367	SGC-156	CONTINUOUS UNIT TYPE 1b P.T. LAYOUT 2 DUAL TRACK GUIDEWAY
368	SGC-157	CONTINUOUS UNIT TYPE 1c P.T. LAYOUT 1 DUAL TRACK GUIDEWAY
369	SGC-158	CONTINUOUS UNIT TYPE 1c P.T. LAYOUT 2 DUAL TRACK GUIDEWAY
370	SGC-159	CONTINUOUS UNIT TYPE 1d P.T. LAYOUT 1 DUAL TRACK GUIDEWAY
371	SGC-160	CONTINUOUS UNIT TYPE 1d P.T. LAYOUT 2 DUAL TRACK GUIDEWAY

SUBJECT TO CHANGE

KJ Designed by	5-06 Date						
KJ Drawn by	5-06 Date						
JE Checked by	5-06 Date						
Approved by	Date	No.	Date	By / Chk	App.	Revisions	

NORTH CORRIDOR METRORAIL EXTENSION - PRELIMINARY ENGINEERING (100% SUBMITTAL)

MIAMI-DADE COUNTY

MIAMI-DADE TRANSIT

PARSONS
7600 CORPORATE CENTER DRIVE, SUITE 500
MIAMI, FLORIDA 33126
PHONE: (786) 464-1000 FAX: (786) 845-7119
CERTIFICATE OF AUTHORIZATION NO. 1838

Approved	Date	Approved	Date

GENERAL

INDEX OF DRAWINGS

Scale	Drawing	Sheet
N.T.S.	GEN-06	6

05/16/2006 05:24:21 AM s:\mdt_north\index sheets\gen-05.dgn

STRUCTURAL- GUIDEWAY (CONCRETE) CONT.

SHEET NO.	DWG NO.	SHEET DESCRIPTION
372	SGC-161	CONTINUOUS UNIT TYPE 1e P.T. LAYOUT 1 DUAL TRACK GUIDEWAY
373	SGC-162	CONTINUOUS UNIT TYPE 1e P.T. LAYOUT 2 DUAL TRACK GUIDEWAY
374	SGC-163	CONTINUOUS UNIT TYPE 1e P.T. LAYOUT 3 DUAL TRACK GUIDEWAY
375	SGC-164	95'-0" SPAN P.T. LAYOUT SINGLE TRACK GUIDEWAY
376	SGC-165	105'-0" SPAN P.T. LAYOUT SINGLE TRACK GUIDEWAY
377	SGC-166	115'-0" SPAN P.T. LAYOUT SINGLE TRACK GUIDEWAY
378	SGC-167	125'-0" SPAN P.T. LAYOUT SINGLE TRACK GUIDEWAY
379	SGC-168	135'-0" SPAN P.T. LAYOUT SINGLE TRACK GUIDEWAY
380	SGC-169	CONTINUOUS UNIT TYPE 2 P.T. LAYOUT 1 SINGLE TRACK GUIDEWAY
381	SGC-170	CONTINUOUS UNIT TYPE 2 P.T. LAYOUT 2 SINGLE TRACK GUIDEWAY
382	SGC-171	CONTINUOUS UNIT TYPE 2a P.T. LAYOUT 1 SINGLE TRACK GUIDEWAY
383	SGC-172	CONTINUOUS UNIT TYPE 2a P.T. LAYOUT 2 SINGLE TRACK GUIDEWAY
384	SGC-173	CONTINUOUS UNIT TYPE 2a P.T. LAYOUT 3 SINGLE TRACK GUIDEWAY
385	SGC-174	CONTINUOUS UNIT TYPE 2b P.T. LAYOUT 1 SINGLE TRACK GUIDEWAY
386	SGC-175	CONTINUOUS UNIT TYPE 2b P.T. LAYOUT 2 SINGLE TRACK GUIDEWAY
387	SGC-176	CONTINUOUS UNIT TYPE 1f P.T. LAYOUT 1 SINGLE TRACK GUIDEWAY
388	SGC-177	CONTINUOUS UNIT TYPE 1f P.T. LAYOUT 2 SINGLE TRACK GUIDEWAY
389	SGC-178	CONTINUOUS UNIT TYPE 1f P.T. LAYOUT 3 SINGLE TRACK GUIDEWAY
390	SGC-179	ERECTION SCHEMATIC DUAL AND SINGLE TRACK SEGMENTS
391	SGC-180	ERECTION SCHEMATIC SPECIAL PIERS
392	SGC-181	ERECTION SCHEMATIC USING OVERHEAD GANTRY

BORING PLANS

SHEET NO.	DWG NO.	SHEET DESCRIPTION
393	GE-001	BORING LOCATION PLAN
394	GE-002	BORING LOCATION PLAN
395	GE-003	BORING LOCATION PLAN
396	GE-004	BORING LOCATION PLAN
397	GE-005	BORING LOCATION PLAN
398	GE-006	BORING LOCATION PLAN
399	GE-007	BORING LOCATION PLAN
400	GE-008	BORING LOCATION PLAN
401	GE-009	BORING LOCATION PLAN
402	GE-010	BORING LOCATION PLAN
403	GE-011	BORING LOCATION PLAN
404	GE-012	BORING LOCATION PLAN
405	GE-013	BORING LOCATION PLAN
406	GE-014	BORING LOCATION PLAN
407	GE-015	BORING LOCATION PLAN
408	GE-016	BORING LOCATION PLAN
409	GE-017	BORING LOCATION PLAN
410	GE-018	BORING LOCATION PLAN
411	GE-019	BORING LOCATION PLAN
412	GE-020	REPORT OF CORE BORINGS
413	GE-021	REPORT OF CORE BORINGS
414	GE-022	REPORT OF CORE BORINGS
415	GE-023	REPORT OF CORE BORINGS
416	GE-024	REPORT OF CORE BORINGS
417	GE-025	REPORT OF CORE BORINGS
418	GE-026	REPORT OF CORE BORINGS
419	GE-027	REPORT OF CORE BORINGS
420	GE-028	REPORT OF CORE BORINGS
421	GE-029	REPORT OF CORE BORINGS
422	GE-030	REPORT OF CORE BORINGS
423	GE-031	REPORT OF CORE BORINGS
424	GE-032	REPORT OF CORE BORINGS
425	GE-033	REPORT OF CORE BORINGS
426	GE-034	REPORT OF CORE BORINGS
427	GE-035	REPORT OF CORE BORINGS
428	GE-036	REPORT OF CORE BORINGS
429	GE-037	REPORT OF CORE BORINGS
430	GE-038	REPORT OF CORE BORINGS
431	GE-039	REPORT OF CORE BORINGS
432	GE-040	REPORT OF CORE BORINGS
433	GE-041	REPORT OF CORE BORINGS
434	GE-042	REPORT OF CORE BORINGS
435	GE-043	REPORT OF CORE BORINGS
436	GE-044	REPORT OF CORE BORINGS
437	GE-045	REPORT OF CORE BORINGS
438	GE-046	REPORT OF CORE BORINGS
439	GE-047	REPORT OF CORE BORINGS
440	GE-048	REPORT OF CORE BORINGS
441	GE-049	REPORT OF CORE BORINGS
442	GE-050	REPORT OF CORE BORINGS
443	GE-051	REPORT OF CORE BORINGS
444	GE-052	REPORT OF CORE BORINGS
445	GE-053	REPORT OF CORE BORINGS
446	GE-054	REPORT OF CORE BORINGS
447	GE-055	REPORT OF CORE BORINGS
448	GE-056	REPORT OF CORE BORINGS
449	GE-057	REPORT OF CORE BORINGS
450	GE-058	REPORT OF CORE BORINGS
451	GE-059	REPORT OF CORE BORINGS
452	GE-060	REPORT OF CORE BORINGS
453	GE-061	REPORT OF CORE BORINGS
454	GE-062	REPORT OF CORE BORINGS
455	GE-063	REPORT OF CORE BORINGS
456	GE-064	REPORT OF CORE BORINGS
457	GE-065	REPORT OF CORE BORINGS
458	GE-066	REPORT OF CORE BORINGS

SUBJECT TO CHANGE

KJ Designed by	5-06 Date					
KJ Drawn by	5-06 Date					
JE Checked by	5-06 Date					
Approved by	Date	No.	Date	By / Chk	App.	Revisions

NORTH CORRIDOR METRORAIL EXTENSION - PRELIMINARY ENGINEERING (100% SUBMITTAL)

MIAMI-DADE COUNTY

MIAMI-DADE TRANSIT

PARSONS
7600 CORPORATE CENTER DRIVE, SUITE 500
MIAMI, FLORIDA 33126
PHONE: (786) 464-1000 FAX: (786) 845-7119
CERTIFICATE OF AUTHORIZATION NO. 1638

Approved	Date	Approved	Date

GENERAL

INDEX OF DRAWINGS

Scale	Drawing	Sheet
N.T.S.	GEN-07	7

ROADWAY-TRAFFIC CONTROL PLANS

SHEET NO.	DWG NO.	SHEET DESCRIPTION
459	TCP-01	TRAFFIC CONTROL-GENERAL NOTES
460	TCP-02	TRAFFIC CONTROL-GENERAL NOTES
461	TCP-03	TRAFFIC CONTROL PRELIMINARY PHASING
462	TCP-04	TRAFFIC CONTROL PRELIMINARY PHASING
463	TCP-05	TRAFFIC CONTROL PRELIMINARY PHASING
464	TCP-06	TRAFFIC CONTROL PRELIMINARY PHASING
465	TCP-07	TRAFFIC CONTROL PRELIMINARY PHASING
466	TCP-08	TRAFFIC CONTROL PRELIMINARY PHASING
467	TCP-09	TRAFFIC CONTROL PRELIMINARY PHASING
468	TCP-10	TRAFFIC CONTROL PRELIMINARY PHASING
469	TCP-11	TRAFFIC CONTROL PRELIMINARY PHASING
470	TCP-12	TRAFFIC CONTROL PRELIMINARY PHASING
471	TCP-13	TRAFFIC CONTROL PRELIMINARY PHASING
472	TCP-14	TRAFFIC CONTROL PRELIMINARY PHASING
473	TCP-15	DETOUR
474	TCP-16	DETOUR
475	TCP-17	DETOUR
476	TCP-18	DETOUR
477	TCP-19	DETOUR
478	TCP-20	DETOUR
479	TCP-21	DETOUR

SIGNING AND PAVEMENT MARKINGS

SHEET NO.	DWG NO.	SHEET DESCRIPTION
480	SPM-01	GENERAL NOTES
481	SPM-02	SIGNING AND PAVEMENT MARKING PLAN
482	SPM-03	SIGNING AND PAVEMENT MARKING PLAN
483	SPM-04	SIGNING AND PAVEMENT MARKING PLAN
484	SPM-05	SIGNING AND PAVEMENT MARKING PLAN
485	SPM-06	SIGNING AND PAVEMENT MARKING PLAN
486	SPM-07	SIGNING AND PAVEMENT MARKING PLAN
487	SPM-08	SIGNING AND PAVEMENT MARKING PLAN
488	SPM-09	SIGNING AND PAVEMENT MARKING PLAN
489	SPM-10	SIGNING AND PAVEMENT MARKING PLAN
490	SPM-11	SIGNING AND PAVEMENT MARKING PLAN
491	SPM-12	SIGNING AND PAVEMENT MARKING PLAN
492	SPM-13	SIGNING AND PAVEMENT MARKING PLAN
493	SPM-14	SIGNING AND PAVEMENT MARKING PLAN
494	SPM-15	SIGNING AND PAVEMENT MARKING PLAN
495	SPM-16	SIGNING AND PAVEMENT MARKING PLAN
496	SPM-17	SIGNING AND PAVEMENT MARKING PLAN
497	SPM-18	SIGNING AND PAVEMENT MARKING PLAN
498	SPM-19	SIGNING AND PAVEMENT MARKING PLAN
499	SPM-20	SIGNING AND PAVEMENT MARKING PLAN
500	SPM-21	SIGNING AND PAVEMENT MARKING PLAN
501	SPM-22	SIGNING AND PAVEMENT MARKING PLAN
502	SPM-23	SIGNING AND PAVEMENT MARKING PLAN
503	SPM-24	SIGNING AND PAVEMENT MARKING PLAN
504	SPM-25	SIGNING AND PAVEMENT MARKING PLAN
505	SPM-26	SIGNING AND PAVEMENT MARKING PLAN
506	SPM-27	SIGNING AND PAVEMENT MARKING PLAN
507	SPM-28	SIGNING AND PAVEMENT MARKING PLAN
508	SPM-29	SIGNING AND PAVEMENT MARKING PLAN
509	SPM-30	SIGNING AND PAVEMENT MARKING PLAN
510	SPM-31	SIGNING AND PAVEMENT MARKING PLAN
511	SPM-32	SIGNING AND PAVEMENT MARKING PLAN
512	SPM-33	SIGNING AND PAVEMENT MARKING PLAN
513	SPM-34	SIGNING AND PAVEMENT MARKING PLAN
514	SPM-35	SIGNING AND PAVEMENT MARKING PLAN
515	SPM-36	SIGNING AND PAVEMENT MARKING PLAN
516	SPM-37	SIGNING AND PAVEMENT MARKING PLAN

ROADWAY- SIGNAL PLANS

SHEET NO.	DWG NO.	SHEET DESCRIPTION
517	RSP-01	GENERAL NOTES
518	RSP-02	SIGNALIZATION PLAN
519	RSP-03	SIGNALIZATION PLAN
520	RSP-04	SIGNALIZATION PLAN
521	RSP-05	SIGNALIZATION PLAN
522	RSP-06	SIGNALIZATION PLAN
523	RSP-07	SIGNALIZATION PLAN
524	RSP-08	SIGNALIZATION PLAN
525	RSP-09	PARKING FACILITY

SUBJECT TO CHANGE

KJ Designed by	5-06 Date					
KJ Drawn by	5-06 Date					
JE Checked by	5-06 Date					
Approved by	Date	No.	Date	By / Chk	App.	Revisions

NORTH CORRIDOR METRORAIL EXTENSION - PRELIMINARY ENGINEERING (100% SUBMITTAL)

MIAMI-DADE COUNTY

MIAMI-DADE TRANSIT

PARSONS
7600 CORPORATE CENTER DRIVE, SUITE 500
MIAMI, FLORIDA 33126
PHONE: (786) 464-1000 FAX: (786) 845-7119
CERTIFICATE OF AUTHORIZATION NO. 1838

Approved	Date	Approved	Date

GENERAL

INDEX OF DRAWINGS

Scale	Drawing	Sheet
N.T.S.	GEN-08	8

STANDARD ABBREVIATIONS:

BOP - BEGINNING OF PROJECT
EOP - END OF PROJECT
PE - PRELIMINARY ENGINEERING
FEIS - FINAL ENVIRONMENTAL IMPACT STATEMENT (AUGUST 2004 DOCUMENT)
NIC - NOT IN CONTRACT
PGL - PROFILE GRADE LINE
TBD - TO BE DETERMINED
UON - UNLESS OTHERWISE NOTED
N - NORTHING
E - EASTING

TRACK STATIONING:

TRACK STATIONING FOR THE PROJECT IS MEASURED ALONG THE CENTER LINE OF PROPOSED TRACK 2. STATIONING TICKS ARE SHOWN AT 100 FOOT INTERVALS, AND NUMBERED EVERY 500 FEET.

EXISTING PROFILES:

UNLESS OTHERWISE NOTED, EXISTING PROFILES SHOWN ARE CUT AT THE CENTERLINE OF THE PROPOSED TRACK 2.

SURVEY CONTROL:

VERTICAL CONTROL FOR THE PROJECT IS BASED ON NEW SURVEY MONUMENTATION (NGVD29).

HORIZONTAL CONTROL FOR THE PROJECT IS BASED ON THE FLORIDA EAST ZONE. (NAD 83/90)

THE PROJECT SPECIFIC SURVEY MONUMENTS ARE SHOWN ON THE PLAN VIEW DRAWINGS AND IN THE SCHEDULE.

SUBJECT TO CHANGE

KJ Designed by	5-06 Date					
KJ Drawn by	5-06 Date					
JE Checked by	5-06 Date					
Approved by	Date	No.	Date	By / Chk	App.	Revisions

NORTH CORRIDOR METRORAIL EXTENSION - PRELIMINARY ENGINEERING (100% SUBMITTAL)

MIAMI-DADE COUNTY

MIAMI-DADE TRANSIT

PARSONS
7600 CORPORATE CENTER DRIVE, SUITE 500
MIAMI, FLORIDA 33126
PHONE: (786) 464-1000 FAX: (786) 845-7119
CERTIFICATE OF AUTHORIZATION NO. 1838

Approved | Date | Approved | Date

GENERAL

GENERAL NOTES

Scale NTS | Drawing GEN-09 | Sheet 9

ABBREVIATION	DEFINITION
ABBR.	ABBREVIATION
AMSL	ABOVE MEAN SEA LEVEL
APPROX.	APPROXIMATE(LY)
AVE.	AVENUE
BL	BASELINE
BLVD.	BOULEVARD
CL	CENTERLINE
CLEAR.	CLEARANCE
CONC.	CONCRETE
DR	DRIVE
DWG(S)	DRAWING(S)
EB	EASTBOUND
EXIST.	EXISTING
EXPWY	EXPRESSWAY
EXT.	EXTENSION
FFE	FINISHED FLOOR ELEVATION
FM	FORCE MAIN
FRWY	FREEWAY
FT OR FT.	FEET
HOR.	HORIZONTAL
HWY.	HIGHWAY
I.D.	INSIDE DIAMETER
KV	KILOVOLT
LT	LEFT
MIN.	MINIMUM
MPH	MILES PER HOUR
MW	MEGAWATT
NB	NORTHBOUND
NE	NORTHEAST
NO. OR NO.	NUMBER
NW	NORTHWEST
OE	OVERHEAD ELECTRIC
PI	POINT OF INTERSECTION
PRESS.	PRESSURE
PROF	PROFILE
PROP.	PROPOSED
PVI	POINT OF VERTICAL INTERSECTION
PVMT	PAVEMENT
R	RADIUS
RD	ROAD
RDWY	ROADWAY
REF	REFERENCE
R/W OR ROW	RIGHT-OF-WAY
RR	RAILROAD
RT	RIGHT
SAN	SANITARY
SB	SOUTHBOUND
SDWK	SIDEWALK
SE	SOUTHEAST
SHDR	SHOULDER
SHT	SHEET
SR	STATE ROAD, AS IN SR 9
ST.	STREET
STA.	STATION
STM	STORM
SW	SOUTHWEST

ABBREVIATION	DEFINITION
TER.	TERRACE
TYP.	TYPICAL
V	VELOCITY
VERT.	VERTICAL
W	WATER
WB	WESTBOUND
W/	WITH
W/O	WITHOUT

EXISTING TOPOGRAPHY

- BUILDING
- EDGE OF WATER
- EDGE OF TREE LINE
- FENCE
- GUARDRAIL
- RR TRACKS
- ROAD OR DRIVE
- SIDEWALK
- TREE
- UNDERGROUND UTILITY — 30" FM

PROPOSED FACILITIES

- PASSENGER STATION CENTER PLATFORM
- PASSENGER STATION SIDE PLATFORM

OTHER FEATURES

- CURVE NO. — C6
- EXISTING R/W

AGENCY AND ASSOCIATIONS

AAR	ASSOCIATION OF AMERICAN RAILROADS
AREMA	AMERICAN RAILWAY ENGINEERING AND MAINTENANCE-OF -WAY ASSOCIATION
FEC	FLORIDA EASTCOAST RAILROAD
MDC	MIAMI DADE COLLEGE
MDT	MIAMI DADE TRANSIT
FTA	FEDERAL TRANSIT ASSOCIATION
MUTCD	MANUAL ON UNIFORM TRAFFIC CONTROL DEVICES
SFRTA	SOUTH FLORIDA REGIONAL TRANSPORTATION AUTHORITY
SFRC	SOUTH FLORIDA RAIL CORRIDOR
TCRP	TRANSIT COOPERATIVE RESEARCH PROGRAM
CSX	CSX TRANSPORTATION (RAILROAD)

SUBJECT TO CHANGE

KJ 5-06 Designed by Date
KJ 5-06 Drawn by Date
JE 5-06 Checked by Date
Approved by Date

No.	Date	By / Chk	App.	Revisions

NORTH CORRIDOR METRORAIL EXTENSION - PRELIMINARY ENGINEERING (100% SUBMITTAL)

MIAMI-DADE COUNTY — MIAMI-DADE TRANSIT

PARSONS
7600 CORPORATE CENTER DRIVE, SUITE 500
MIAMI, FLORIDA 33126
PHONE: (786) 464-1000 FAX: (786) 845-7119
CERTIFICATE OF AUTHORIZATION NO. 1838

Approved Date — Approved Date

GENERAL

STANDARD ABBREVIATIONS AND SYMBOLS

Scale NTS | Drawing GEN-10 | Sheet 10

05/15/2006 03:44:08 PM s:\MDT_North\Index_sheets\GEN-13.dgn

TRACK ANNOTATION

AH	AHEAD
ATR	ABOVE TOP OF RAIL
BOM	BILL OF MATERIAL
BK	BACK
BP	BUMPING POST
BT	BEGIN TRACK
CL	CENTERLINE
CWR	CONTINUOUSLY-WELDED RAIL
D, DR	DERAIL
DS	DOUBLE SHOULDER
DXO	DOUBLE CROSSOVER
E_a	SUPERELEVATION (ACTUAL)
EQ	EQUATION/EQUILATERAL
E_e	SUPERELEVATION (EQUILIBRIUM)
E_u	SUPERELEVATION (UNBALANCE)
EL	ELECTRIC LOCK
ELEV, EL	ELEVATION
EOP	END OF PROJECT
ET	END TRACK
F	FROG ANGLE
FD	FLANGEWAY DEPTH
FW	FLANGEWAY WIDTH
g	ACCELERATION DUE TO GRAVITY
h	ELEVATION GAIN
HA	HEEL ANGLE
HB	HEAD BLOCK
HF	HEEL OF FROG
HL	HEEL LENGTH
HS	HEEL SPREAD
HT	HAND THROW
IJ	INSULATED JOINT
JT	JOINT
L	LADDER ANGLE
LH	LEFT HAND
LHTO	LEFT HAND TURNOUT
LHXO	LEFT HAND CROSSOVER
LT	LEFT
PA	POINT ANGLE
PCC	POINT OF COMPOUND CURVE
PED	PEDESTRIAN
PF	POINT OF FROG
PI 10TO	POINT OF INTERSECTION #10 TURNOUT
PITO	POINT OF INTERSECTION OF TURNOUT
PNL	PANEL
PS	POINT OF SWITCH
RC	REMOTE CONTROL

TRACK ANNOTATION, CONT.

RE	AREMA RAIL SECTION
RH	RIGHT HAND
RHTO	RIGHT HAND TURNOUT
RHXO	RIGHT HAND CROSSOVER
RS	RAIL SEAT
RT	RIGHT
SE	SUPERELEVATION
SP, SPR	SPRING
STA	STATION
STD	STANDARD
SW	SIDEWALK
TBM	TEMPORARY BENCHMARK
TF	TOE OF FROG
TK	TRACK
TL	TOE LENGTH
TO	TURNOUT
TR, T/R	TOP OF RAIL
TS	TOE SPREAD
TYP	TYPICAL
V	VELOCITY OR SPEED
VA	VERTEX ANGLE
VD	VERTEX DISTANCE
WS	WHEEL STOPS
XNG, XING	CROSSING
XO	CROSSOVER

HORIZONTAL GEOMETRY

CS	POINT OF CHANGE CURVE TO SPIRAL
CS(2)	POINT OF CHANGE FROM SECOND CIRCULAR CURVE CURVE TO NEXT SPIRAL
PC	POINT OF CURVATURE; POINT OF CHANGE FROM TANGENT TO CIRCULAR CURVE (NO INTERVENING SPIRAL)
PCC	POINT OF COMPOUND CURVATURE (NO INTERVENING TANGENT OR SPIRAL)
PI	POINT OF INTERSECTION OF TWO TANGENTS
POC	POINT ON CIRCULAR CURVE
POS	POINT ON SPIRAL
POT	POINT ON TANGENT
PRC	POINT OF REVERSE CURVATURE (NO INTERVENING TANGENT OR SPIRAL)
PRS	POINT OF REVERSE SPIRALS
PT	POINT OF TANGENCY; POINT OF CHANGE FROM CIRCULAR CURVE TO TANGENT (NO INTERVENING SPIRAL)
SC	POINT OF CHANGE FROM SPIRAL TO CURVE
ST	POINT OF CHANGE FROM SPIRAL TO TANGENT
SS	POINT OF CHANGE FROM SPIRAL TO SPIRAL

STA L	STATION LEFT TRACK
STA R	STATION RIGHT TRACK
TS	POINT OF CHANGE FROM TANGENT TO SPIRAL
CC	CENTER OF CIRCULAR CURVE
Dc	DEGREE OF CURVE (ARC DEFINITION)
E	EXTERNAL DISTANCE CURVE TO PI
I	CENTRAL ANGLE
LC	TOTAL LENGTH OF CIRCULAR CURVE
MO	MIDORDINATE OF CHORD
R	RADIUS
TC	TANGENT DISTANCE OF CIRCULAR CURVE (FROM PC TO PI; OR FROM PI TO PT, NO SPIRAL)
Δ_c	CENTRAL ANGLE OF CIRCULAR CURVE
Δ_{c_2}	SUFFIX (2) SAME AS ABOVE - SECOND CIRCULAR CURVE.

VERTICAL ALIGNMENT

G1	VERTICAL LEADING GRADE %
G2	VERTICAL TRAILING GRADE %
LVC	LENGTH OF (HORIZONTAL PROJECTION OF) VERTICAL CURVE FROM PVC TO PVT
MO	MIDORDINATE OF VERTICAL CURVE
POVC	POINT ON VERTICAL CURVE
POVT	POINT ON VERTICAL TANGENT
PVC	POINT OF VERTICAL CURVATURE; POINT OF BEGINNING OF VERTICAL CURVE
PVCC	POINT OF COMPOUND VERTICAL CURVE
PVI	POINT OF INTERSECTION OF VERTICAL TANGENT
PVRC	POINT OF REVERSE VERTICAL CURVE
PVT	POINT OF VERTICAL TANGENCY; POINT OF ENDING OF VERTICAL CURVE
R	RATE OF CHANGE OF VERTICAL GRADE; ABSOLUTE [G1 - G2]/LVC
VC, V.C.	VERTICAL CURVE

KJ Designed by	5-06 Date					
KJ Drawn by	5-06 Date					
JE Checked by	5-06 Date					
Approved by	Date	No.	Date	By / Chk	App.	Revisions

NORTH CORRIDOR METRORAIL EXTENSION - PRELIMINARY ENGINEERING (100% SUBMITTAL)

SUBJECT TO CHANGE

GENERAL

MIAMI-DADE COUNTY

MIAMI-DADE TRANSIT

PARSONS
7600 CORPORATE CENTER DRIVE, SUITE 500
MIAMI, FLORIDA 33126
PHONE: (786) 464-1000 FAX: (786) 845-7119
CERTIFICATE OF AUTHORIZATION NO. 1836

Approved	Date	Approved	Date

GEOMETRY ABBREVIATIONS

Scale | Drawing GEN-11 | Sheet 11

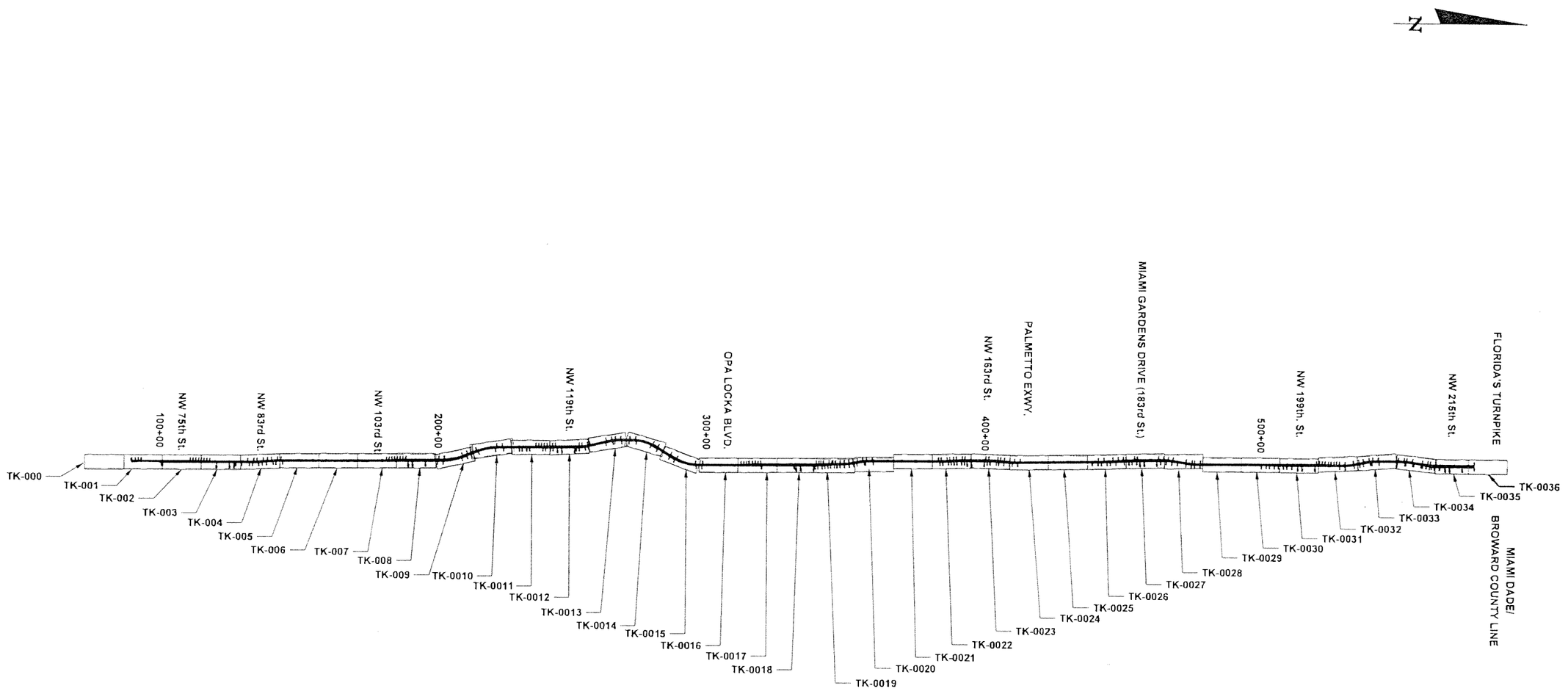

0 1000 4000
Feet

SUBJECT TO CHANGE

KJ Designed by	10-05 Date				
KJ Drawn by	10-05 Date				
JE Checked by	10-05 Date				
Approved by	Date	No.	Date	By / Chk. App.	Revisions

NORTH CORRIDOR METRORAIL EXTENSION - PRELIMINARY ENGINEERING (100% SUBMITTAL)

MIAMI-DADE COUNTY

MIAMI-DADE TRANSIT

PARSONS
7600 CORPORATE CENTER DRIVE, SUITE 500
MIAMI, FLORIDA 33126
PHONE: (786) 464-1000 FAX: (786) 845-7119
CERTIFICATE OF AUTHORIZATION NO. 1838

Approved | Date | Approved | Date

GENERAL

KEY MAP PLAN/PROFILE (TRACK ALIGNMENT)

Scale | Drawing GEN-12 | Sheet 12

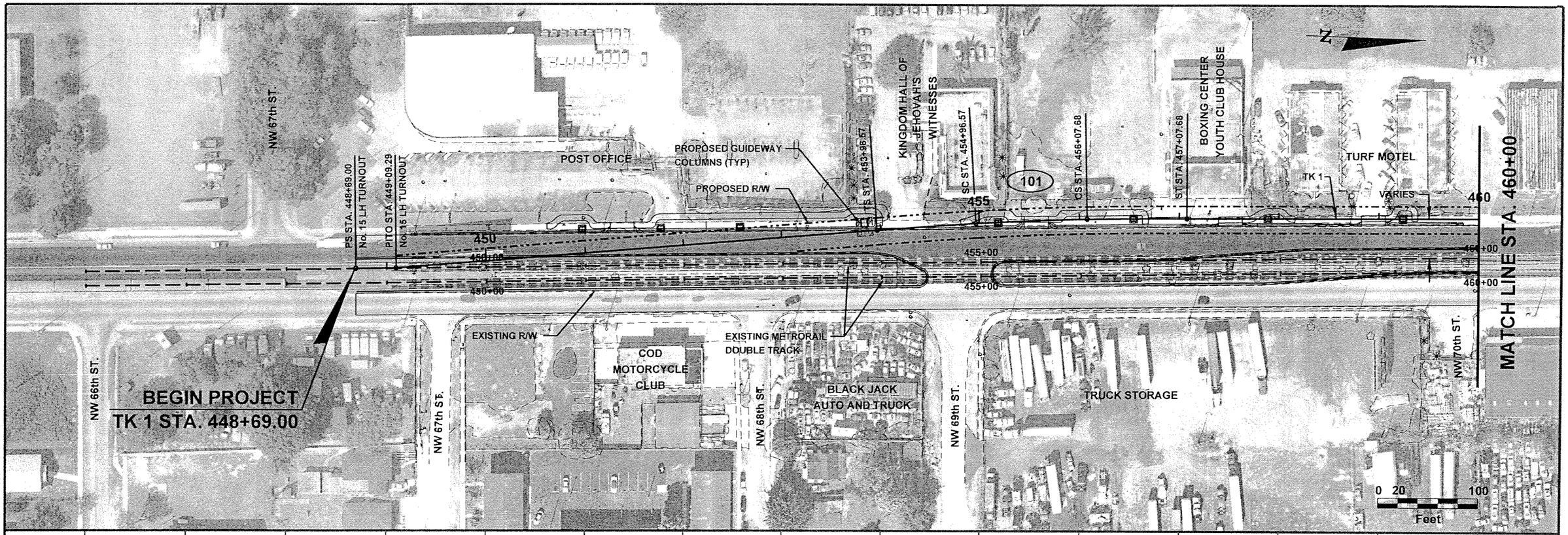

FCB	08-05					
Designed by	Date					
ACh	04-06					
Drawn by	Date					
JAE	05-06					
Checked by	Date					
Approved by	Date	No.	Date	By / Chk	App.	Revisions

NORTH CORRIDOR METRORAIL EXTENSION - PRELIMINARY ENGINEERING (100% SUBMITTAL)

MIAMI-DADE COUNTY

MIAMI-DADE TRANSIT

PARSONS
7600 CORPORATE CENTER DRIVE, SUITE 500
MIAMI, FLORIDA 33126
PHONE: (786) 464-1000 FAX: (786) 845-7119
CERTIFICATE OF AUTHORIZATION NO. 1838

Approved | Date | Approved | Date

TRACK

PLAN AND PROFILE

Scale HOR: 1" = 100' | Drawing TK - 000 | Sheet 13

05/15/2006 11:00:58 AM S:\MDT_North\trackway\plan\tk008.dgn

MATCH LINE STA. 460+00

MATCH LINE STA. 105+00

TURF MOTEL

NW 71st ST.

GUS PAINT & BODY SHOP

PROPOSED GUIDEWAY COLUMNS (TYP)

EQUATION: TK 1 POT 464+51.95 BK = Sta 95+85.17 AH

STORAGE

NW 73rd ST.

LA VEGA MOTORS CABS & TRUCKS

F.E.C. RAILROAD

PROPOSED R/W

3 STORAGE INC. NW MILL WORKS

TK 1

VARIES

460

460+00

100

100+00

105

105+00

NW 27th AVE.

AMERICAN SALVAGE

VACANT LOT GAS STATION

NW 71th Ter.

VACANT LOT

EQUATION: TK 2 POT 464+51.95 BK = Sta 95+85.17 AH

EXISTING METRORAIL DOUBLE TRACK

RO-SA-MAR AUTO REPAIR

NW 72nd ST.

PAYLESS CARS

USED CARS

EXISTING R/W

POT STA. 103+37.72 MEET EXISTING METRORAIL WB TK

REDS SPECIALTY

NW 74th ST.

PS STA. 104+77.47 No. 15 LH TURNOUT

AUTO TRUCK

N

0 20 100

Feet

400' V.C.

SCALE : 1" = 100' HOR.
1" = 20' VERT.

60

40

20

0

200' V.C.

+16.67 EL. 39.44

38.29

39.22

(+) 1.387%

PI +16.67
EL. 38.05

13.31

16.6'

EX TK

BOTTOM OF STRUCTURE

EQUATION: TK 1
464+51.95 BK
= 95+85.17 AH

40.54

EXISTING GROUND

℄ NW 71ST ST.

460

464 96

BOTTOM OF EXIST. STRUCTURE

23.8' (EXISTING)

30.3'

℄ NW 73RD ST.

100

+00.00 EL. 51.23

TK 1 T/R

52.44

(+) 1.387%

53.31

PI +00.00
EL. 54.00

(+) 0.000%

53.83

+00.00 EL. 54.00

PI +50.00
EL. 44.35

(+) 0.574%

(-) 1.647%

TK 2 T/R

No. 15 TO TK 2

54.00

40.23

+50.00 EL. 43.20

43.42

43.44

42.80

41.83

+50.00 EL. 41.06

PS TK 2
No. 15 LH TO
STA 104+77.47
EL 40.60

22.6' (EXISTING)

400' V.C.

BOTTOM OF STRUCTURE

℄ F.E.C. RR

10.12

105

SUBJECT TO CHANGE

FCB	08-05						
Designed by	Date						
ACh	04-06						
Drawn by	Date						
JAE	05-06						
Checked by	Date						
Approved by	Date	No.	Date	By / Chk.	App.	Revisions	

NORTH CORRIDOR METRORAIL EXTENSION - PRELIMINARY ENGINEERING (100% SUBMITTAL)

TRACK

MIAMI-DADE COUNTY

MIAMI-DADE TRANSIT

PARSONS

7600 CORPORATE CENTER DRIVE, SUITE 500
MIAMI, FLORIDA 33126
PHONE: (786) 464-1000 FAX: (786) 845-7119
CERTIFICATE OF AUTHORIZATION NO. 1838

Approved	Date	Approved	Date

PLAN AND PROFILE

Scale	Drawing	Sheet
HOR: 1" = 100'	TK - 001	12

05/15/2006 12:17:01 PM S:\MDT_Northtrackway\dgn\016.dgn

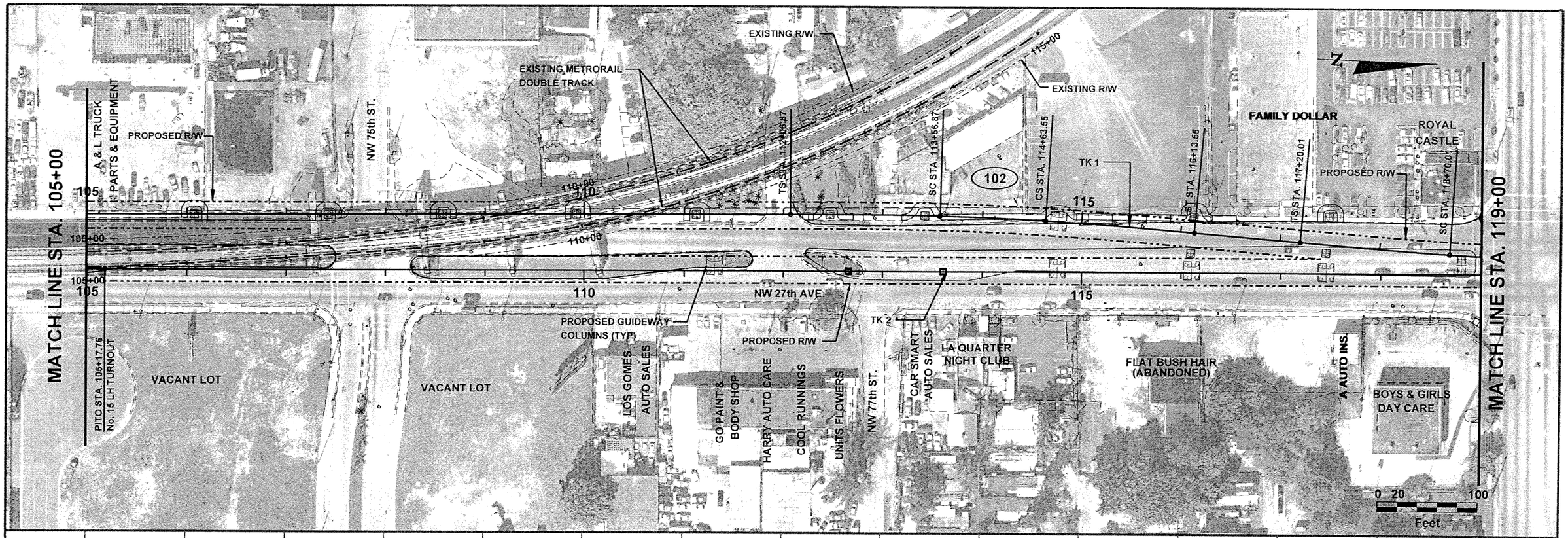

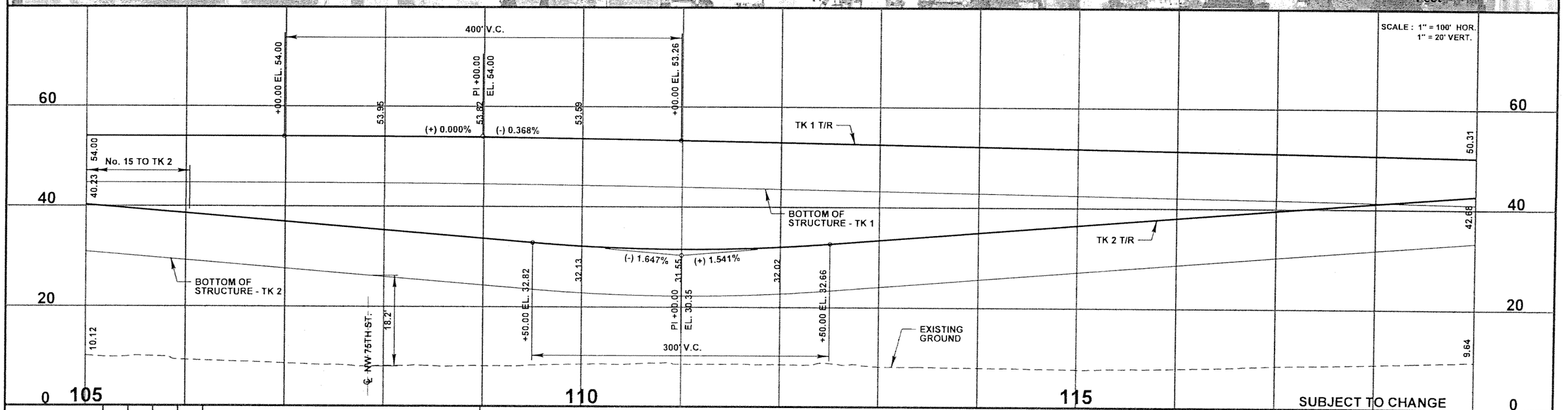

SUBJECT TO CHANGE

FCB	08-05					
Designed by	Date					
ACh	04-06					
Drawn by	Date					
JAE	05-06					
Checked by	Date					
Approved by	Date	No.	Date	By / Chk	App.	Revisions

NORTH CORRIDOR METRORAIL EXTENSION - PRELIMINARY ENGINEERING (100% SUBMITTAL)

MIAMI-DADE COUNTY

MIAMI-DADE TRANSIT

PARSONS
7600 CORPORATE CENTER DRIVE, SUITE 500
MIAMI, FLORIDA 33126
PHONE: (786) 464-1000 FAX: (786) 845-7119
CERTIFICATE OF AUTHORIZATION NO. 1838

Approved	Date	Approved	Date

TRACK

PLAN AND PROFILE

Scale	Drawing	Sheet
HOR: 1" = 100'	TK - 002	15

09/15/2006 11:52:02 AM S:\MDT_North\tracings\dgn\tk002.dgn

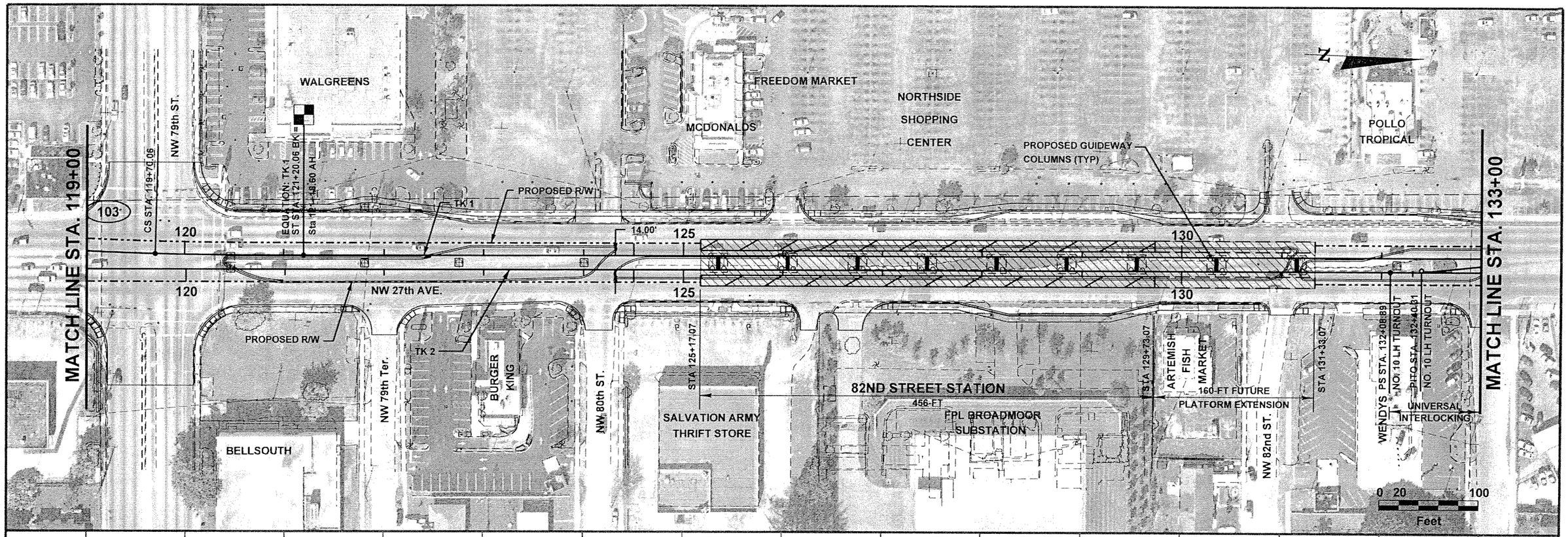

SCALE : 1" = 100' HOR.
1" = 20' VERT.

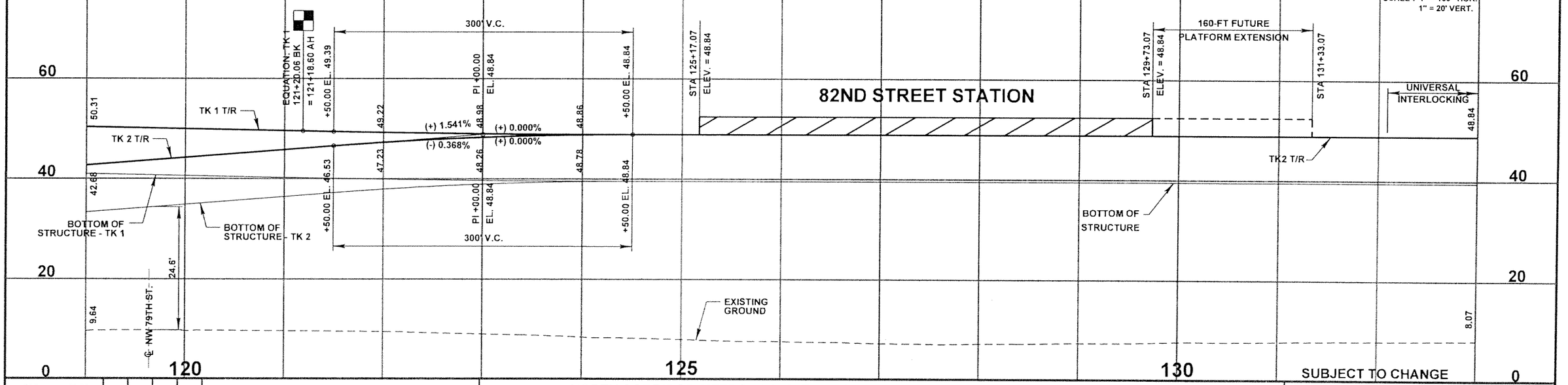

FCB	08-05						
Designed by	Date						
ACh	04-06						
Drawn by	Date						
JAE	05-06						
Checked by	Date						
Approved by	Date	No.	Date	By / Chk	App.	Revisions	

NORTH CORRIDOR METRORAIL EXTENSION - PRELIMINARY ENGINEERING (100% SUBMITTAL)

TRACK

MIAMI-DADE COUNTY

MIAMI-DADE TRANSIT

PARSONS
7600 CORPORATE CENTER DRIVE, SUITE 500
MIAMI, FLORIDA 33126
PHONE: (786) 464-1000 FAX: (786) 845-7119
CERTIFICATE OF AUTHORIZATION NO. 1838

Approved	Date	Approved	Date

PLAN AND PROFILE

Scale HOR: 1" = 100' | Drawing TK - 003 | Sheet 16

05/15/2006 12:02:03 PM S:\MDT North\trackway\plprtk03fl.dgn

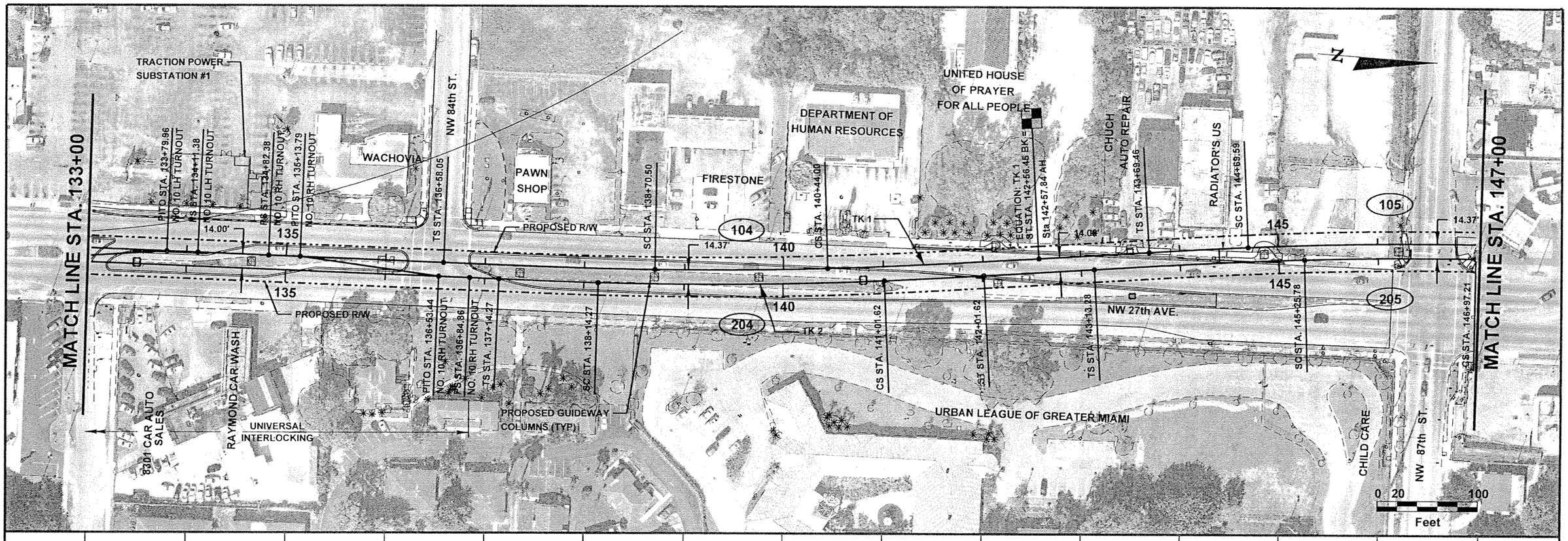

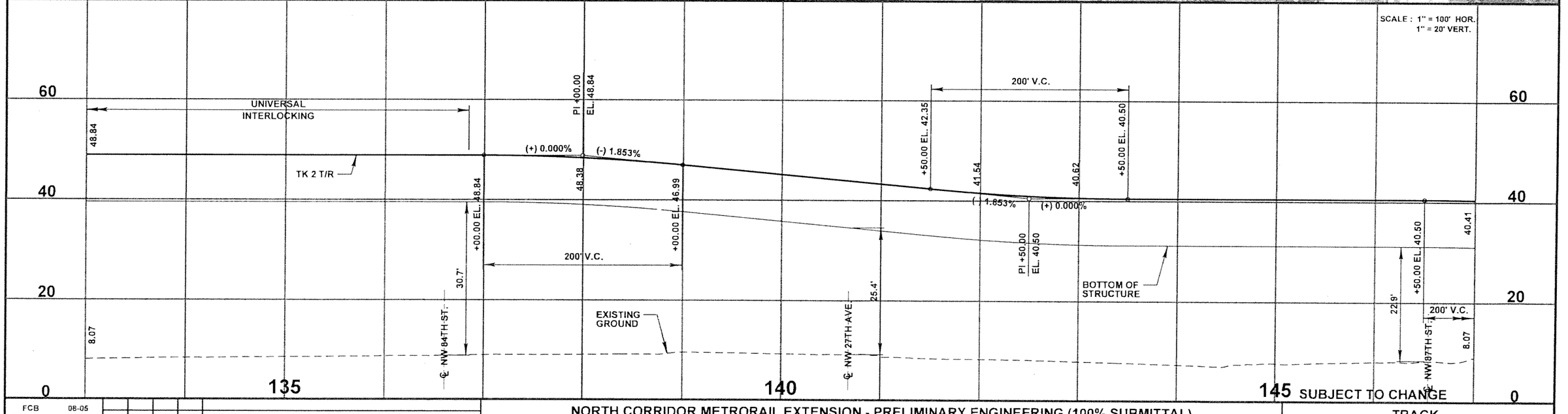

FCB	08-05					
Designed by	Date					
ACh	04-06					
Drawn by	Date					
JAE	05-06					
Checked by	Date					
Approved by	Date	No.	Date	By / Chk.	App.	Revisions

NORTH CORRIDOR METRORAIL EXTENSION - PRELIMINARY ENGINEERING (100% SUBMITTAL)

TRACK

MIAMI-DADE COUNTY

MIAMI-DADE TRANSIT

PARSONS
7600 CORPORATE CENTER DRIVE, SUITE 500
MIAMI, FLORIDA 33126
PHONE: (786) 464-1000 FAX: (786) 545-7119
CERTIFICATE OF AUTHORIZATION NO. 1838

Approved | Date | Approved | Date

PLAN AND PROFILE

Scale: HOR: 1" = 100' | Drawing: TK - 004 | Sheet: 17

05/15/2006 10:45:14 AM x:\mdt_north\trackway\plpvtk04.dgn

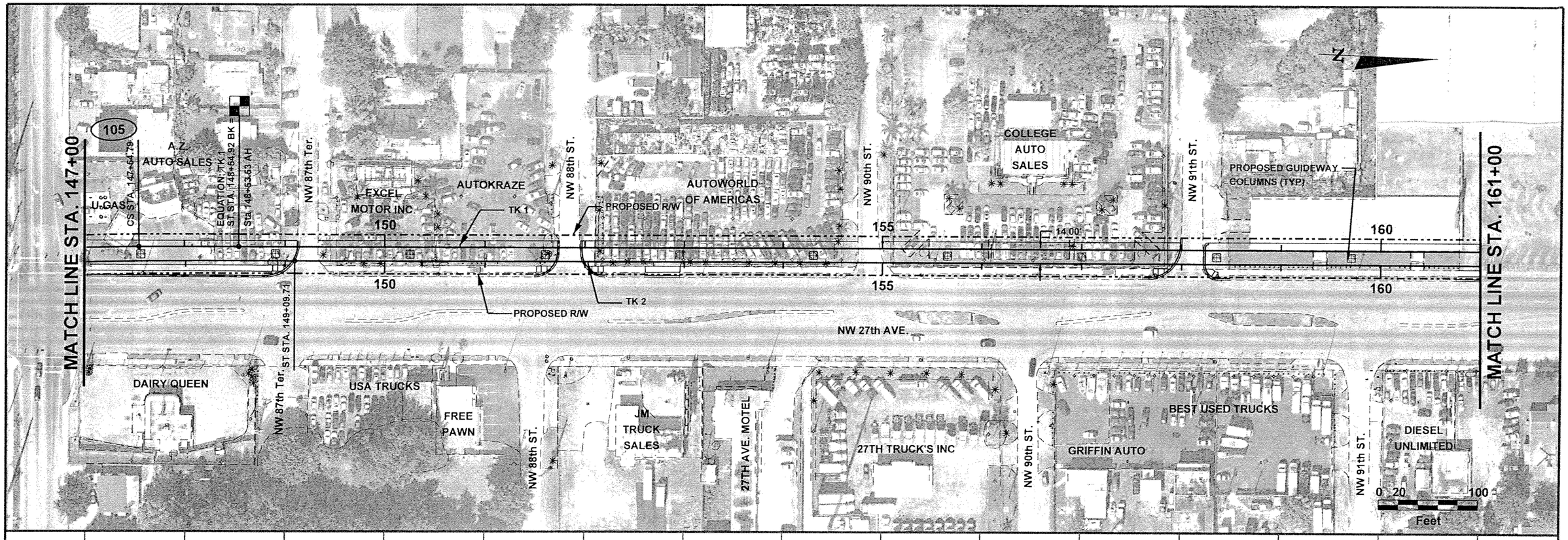

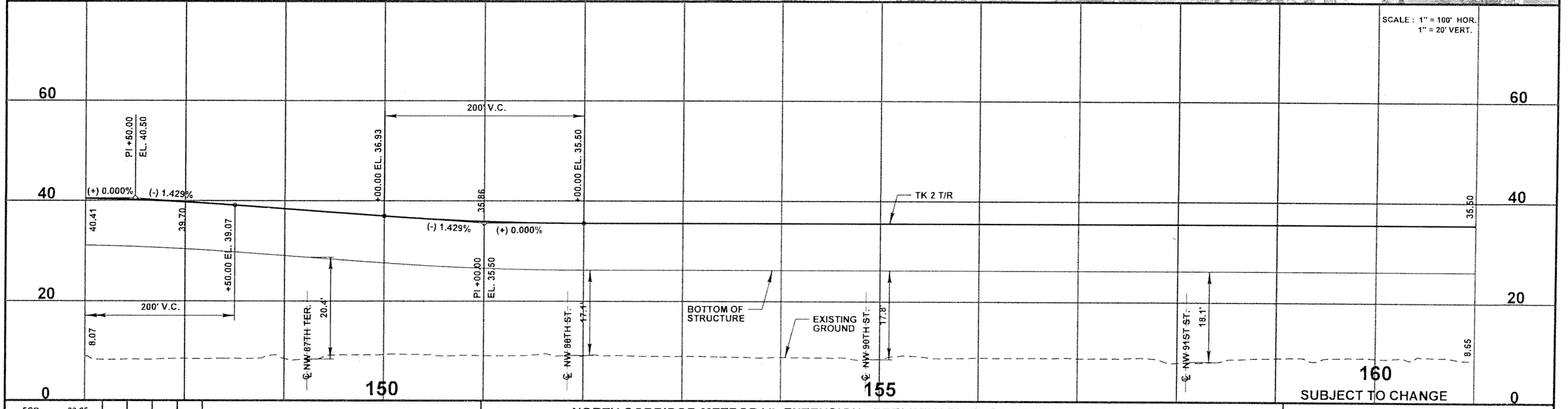

FCB	08-05					
Designed by	Date					
ACh	04-06					
Drawn by	Date					
JAE	05-06					
Checked by	Date					
Approved by	Date	No.	Date	By / Chk	App.	Revisions

NORTH CORRIDOR METRORAIL EXTENSION - PRELIMINARY ENGINEERING (100% SUBMITTAL)

TRACK

MIAMI-DADE COUNTY

MIAMI-DADE TRANSIT

PARSONS
7600 CORPORATE CENTER DRIVE, SUITE 500
MIAMI, FLORIDA 33126
PHONE: (786) 464-1000 FAX: (786) 845-7119
CERTIFICATE OF AUTHORIZATION NO. 1838

Approved | Date

Approved | Date

PLAN AND PROFILE

Scale: HOR: 1" = 100' | Drawing: TK - 005 | Sheet: 3

05/15/2006 10:45:42 AM s:\mdt north\trackway\plprfk05.dgn

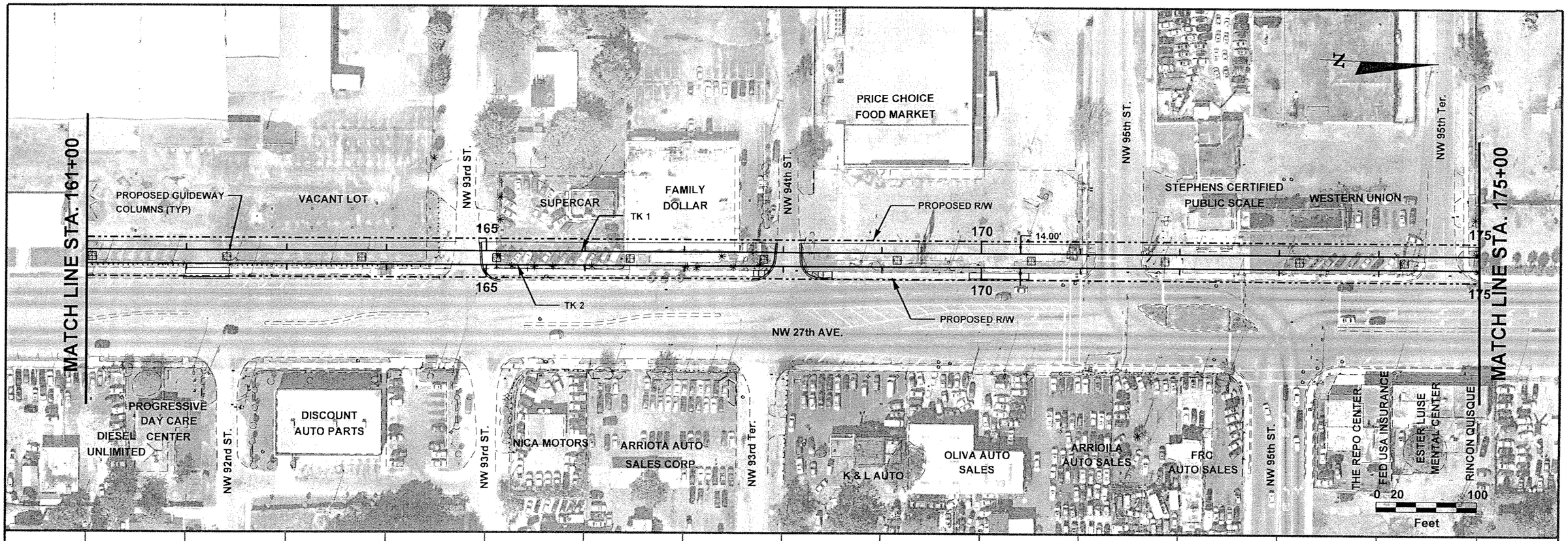

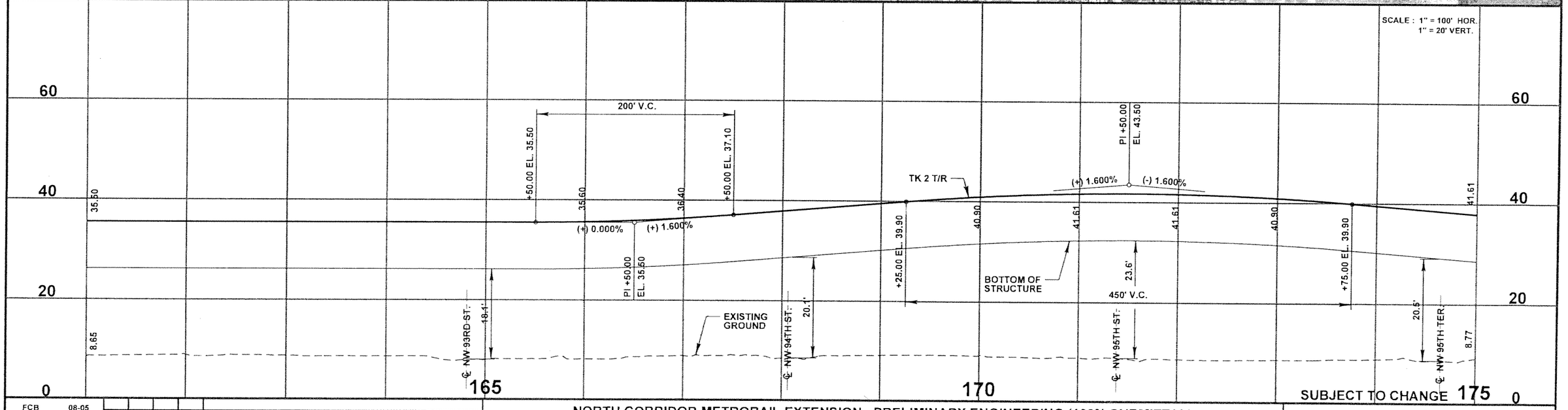

FCB	08-05					
Designed by	Date					
ACh	04-06					
Drawn by	Date					
JAE	05-06					
Checked by	Date					
Approved by	Date	No.	Date	By / Chk	App.	Revisions

NORTH CORRIDOR METRORAIL EXTENSION - PRELIMINARY ENGINEERING (100% SUBMITTAL)

TRACK

MIAMI-DADE COUNTY

MIAMI-DADE TRANSIT

PARSONS
7600 CORPORATE CENTER DRIVE, SUITE 500
MIAMI, FLORIDA 33126
PHONE: (786) 464-1000 FAX: (786) 845-7119
CERTIFICATE OF AUTHORIZATION NO. 1838

Approved	Date	Approved	Date

PLAN AND PROFILE

Scale	Drawing	Sheet
HOR: 1" = 100'	TK - 006	9

05/15/2006 10:46:04 AM

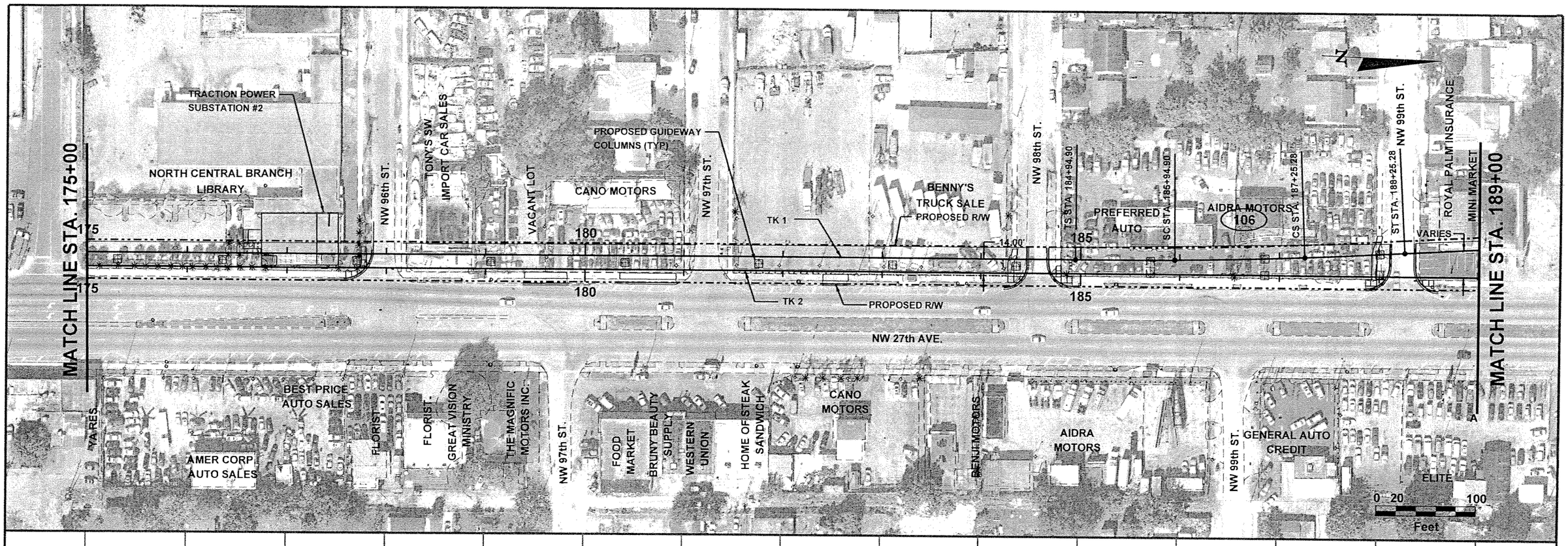

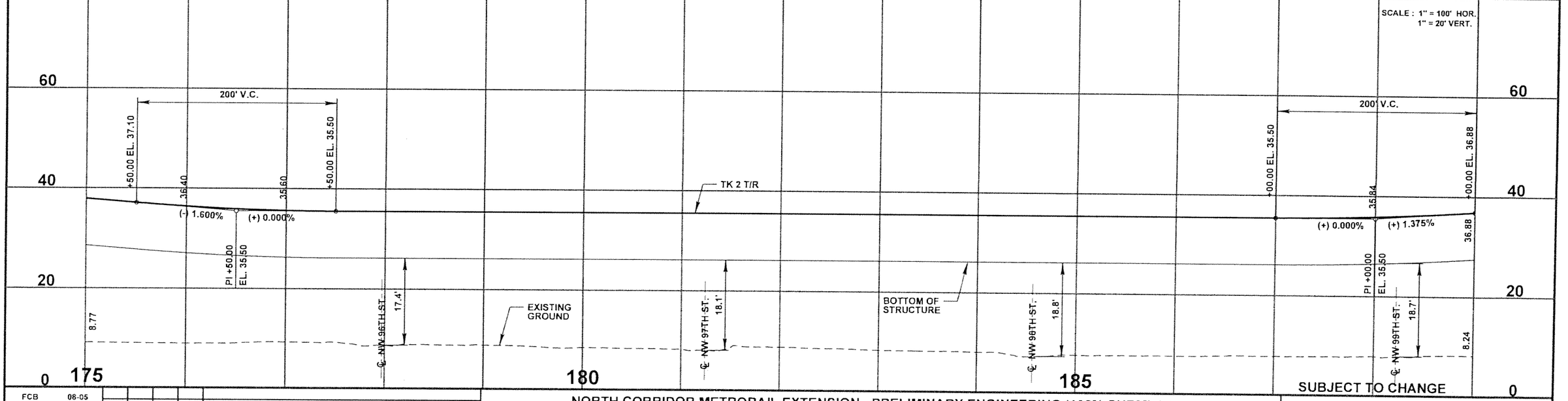

FCB	08-05					
Designed by	Date					
ACh	04-06					
Drawn by	Date					
JAE	05-06					
Checked by	Date					
Approved by	Date	No.	Date	By / Chk.	App.	Revisions

NORTH CORRIDOR METRORAIL EXTENSION - PRELIMINARY ENGINEERING (100% SUBMITTAL)

TRACK

MIAMI-DADE COUNTY

MIAMI-DADE TRANSIT

PARSONS
7500 CORPORATE CENTER DRIVE, SUITE 500
MIAMI, FLORIDA 33126
PHONE: (786) 464-1000 FAX: (786) 845-7119
CERTIFICATE OF AUTHORIZATION NO. 1838

Approved | Date

Approved | Date

PLAN AND PROFILE

Scale HOR: 1" = 100' | Drawing TK - 007 | Sheet 20

MATCH LINE STA. 189+00

CAFETERIA
TS STA. 188+31.96
SUPERIOR DRUGSTORE
SC STA. 190+31.96
NEW IMAGE MOTORS
107
CS STA. 191+62.34
NW 100th ST.
SUN#1 AUTO SALES
EQUATION: TK 1 ST STA 192+62.34 BK = Sta 192+61.74 AH
LA CARIDAD HARDWARE
BAHIA HONDA SUPERMARKET
PAWN SHOP
NW 101st ST.
PROPOSED R/W
SAMY PAINT & TOOL RENTAL
NEW WAY AUTO PARTS
FIELD'S HOUSE OF BEAUTY
BOTANICA
SAN MIGUEL 2 BARBERSHOP
MIAMI SEAT COVERS
NW 102nd ST.
PROPOSED GUIDEWAY COLUMNS (TYP)
USED CAR WHOLESALE
TK 1
SHELL GAS STATION
BAILEY FURNITURE
MATCH LINE STA. 203+00

190 195 200

VARIES
TK 2
PROPOSED R/W
STA 193+26.79
FUTURE 103RD STREET STATION
616-FT
NW 27th AVE.
STA 199+42.79
39.42'

AL'S TROPICAL CARS
R & R CARS
MOTORS IN DUMPS
NW 101st ST.
MIAMI CAR DEPOT
THOMAS RENTALS PAINT FAIR CROP.
EL TAMARINDO BAR AND RESTAURANT
DON FERNADO TRAVEL
OLLS FOOD GROCERY
ATLANTIC FIRE EQUIP. CORP.
VICTORS UPHOLSTERY
MIAMI VANS & TRUCKS
MOBIL GAS STATION
NW 103rd ST.
BENJI AUTO SALES
ZANNI UNISEX BEAUTY SALON
PROFESSIONAL ORTHOPEDIC CENTER

N

0 20 100
Feet

SCALE : 1" = 100' HOR.
1" = 20' VERT.

160-FT FUTURE PLATFORM EXTENSION

PI +00.00 EL. 41.00
TK 2 T/R
STA 193+26.79
STA 194+86.79 ELEV. = 41.00
STA 199+42.79 ELEV. = 41.00
PI +00.00 EL. 41.00

FUTURE 103RD STREET STATION

(+) 1.375%
(+) 0.000%
(+) 0.000%
(-) 1.125%

60
40
20
0

36.88
+00.00 EL. 39.63
40.66
+00.00 EL. 41.00
22.8'
200' V.C.
BOTTOM OF STRUCTURE
+00.00 EL. 41.00
40.72
+00.00 EL. 39.88
39.88
200' V.C.
8.24
NW 100TH ST.
NW 101ST ST.
NW 102ND ST.
NW 103RD ST.
22.7'
22.7'
22.7'
EXISTING GROUND
8.11

190 195 200

SUBJECT TO CHANGE

FCB	08-05					
Designed by	Date					
ACh	04-06					
Drawn by	Date					
JAE	05-06					
Checked by	Date					
Approved by	Date	No.	Date	By / Chk	App	Revisions

NORTH CORRIDOR METRORAIL EXTENSION - PRELIMINARY ENGINEERING (100% SUBMITTAL)

MIAMI-DADE COUNTY
MIAMI-DADE TRANSIT

PARSONS
7600 CORPORATE CENTER DRIVE, SUITE 500
MIAMI, FLORIDA 33126
PHONE: (786) 464-1000 FAX: (786) 845-7119
CERTIFICATE OF AUTHORIZATION NO. 1838

Approved | Date | Approved | Date

TRACK

PLAN AND PROFILE

Scale HOR: 1" = 100' | Drawing TK - 008 | Sheet 21

05/15/2006 10:46:54 AM s:\mdt_north\trackway\plndf08.dgn

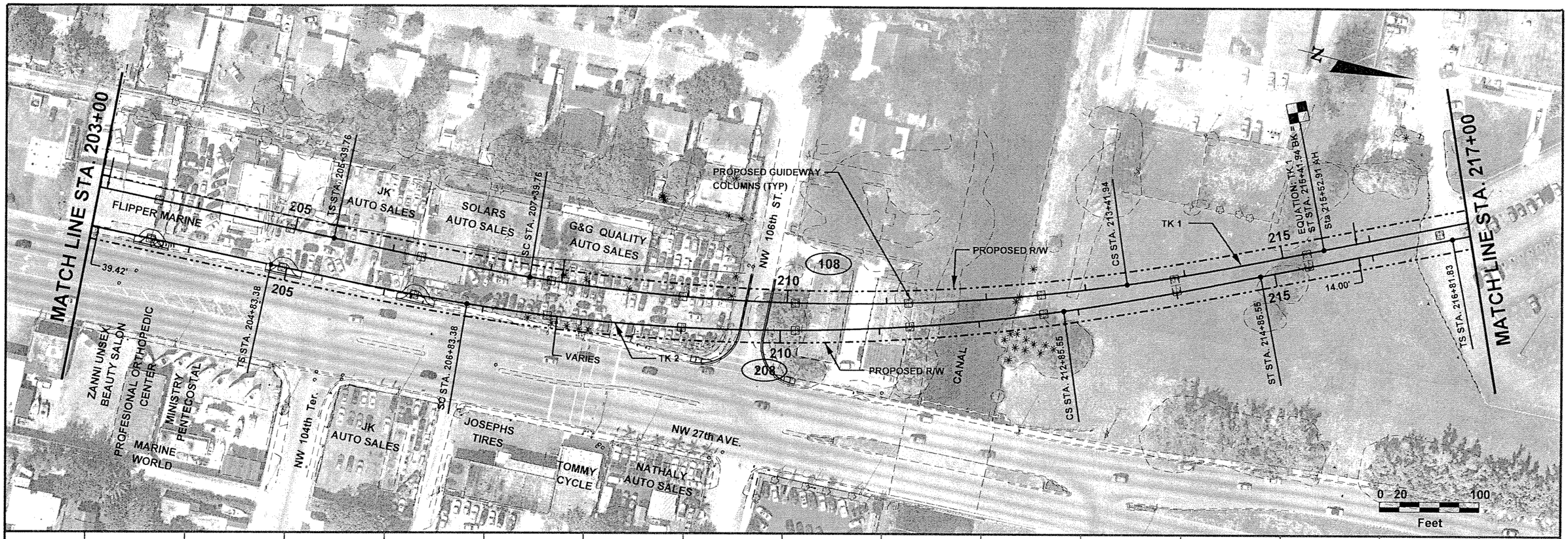

SCALE : 1" = 100' HOR.
1" = 20' VERT.

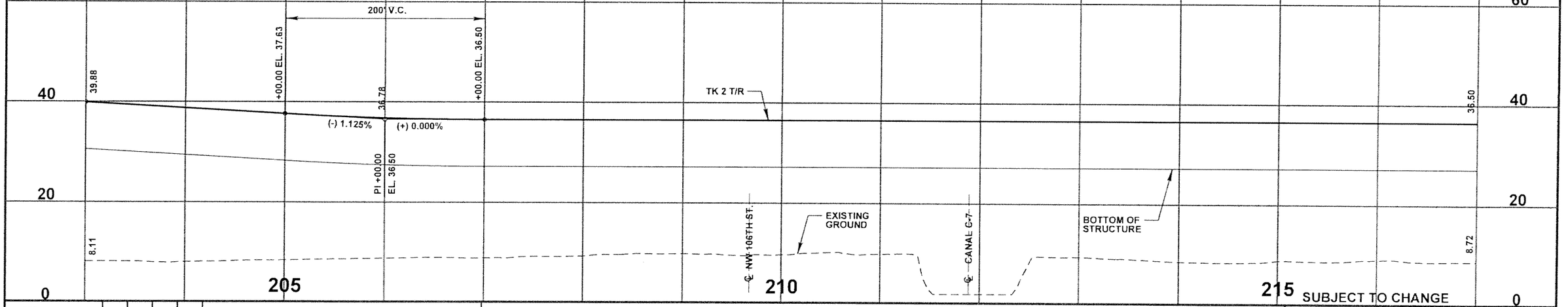

SUBJECT TO CHANGE

FCB	08-05				
Designed by	Date				
ACh	04-06				
Drawn by	Date				
JAE	05-06				
Checked by	Date				
Approved by	Date	No.	Date	By / Chk	App.	Revisions

NORTH CORRIDOR METRORAIL EXTENSION - PRELIMINARY ENGINEERING (100% SUBMITTAL)

TRACK

MIAMI-DADE COUNTY

MIAMI-DADE TRANSIT

PARSONS
7600 CORPORATE CENTER DRIVE, SUITE 500
MIAMI, FLORIDA 33126
PHONE: (786) 464-1000 FAX: (786) 845-7119
CERTIFICATE OF AUTHORIZATION NO. 1838

Approved	Date	Approved	Date

PLAN AND PROFILE

Scale HOR: 1" = 100' | Drawing TK - 009 | Sheet 22

05/15/2006 10:47:23 AM s:\mdt_north\trackway\plprtk09.dgn

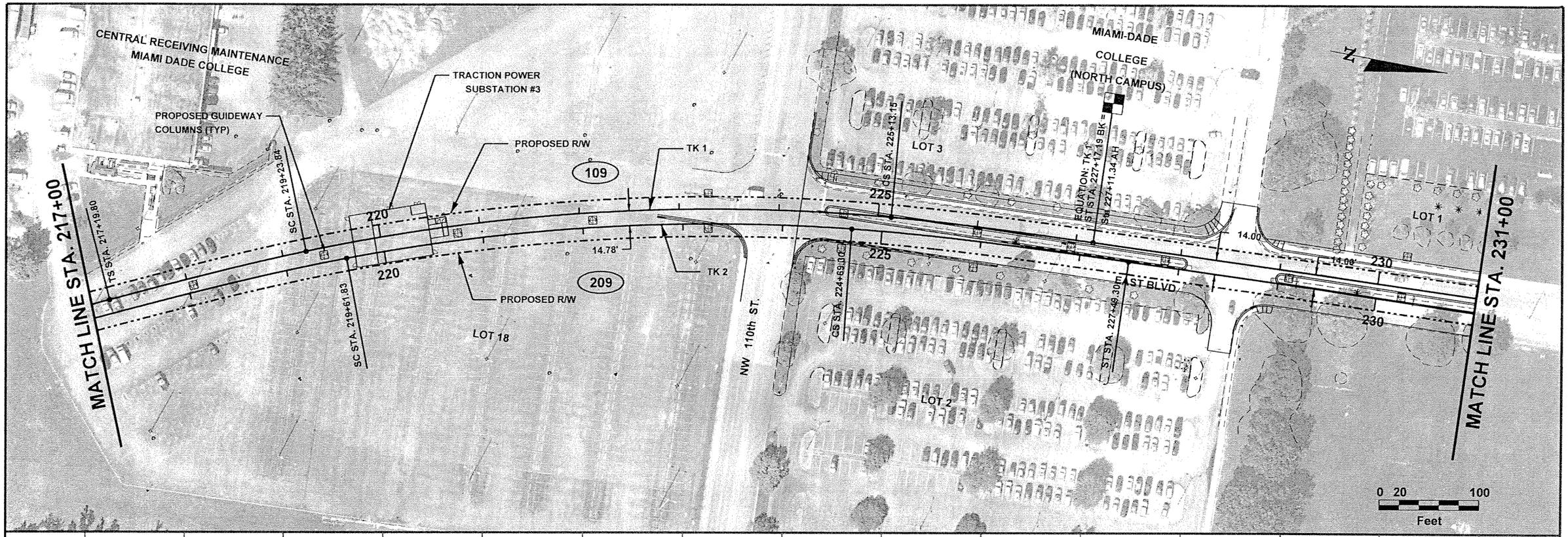

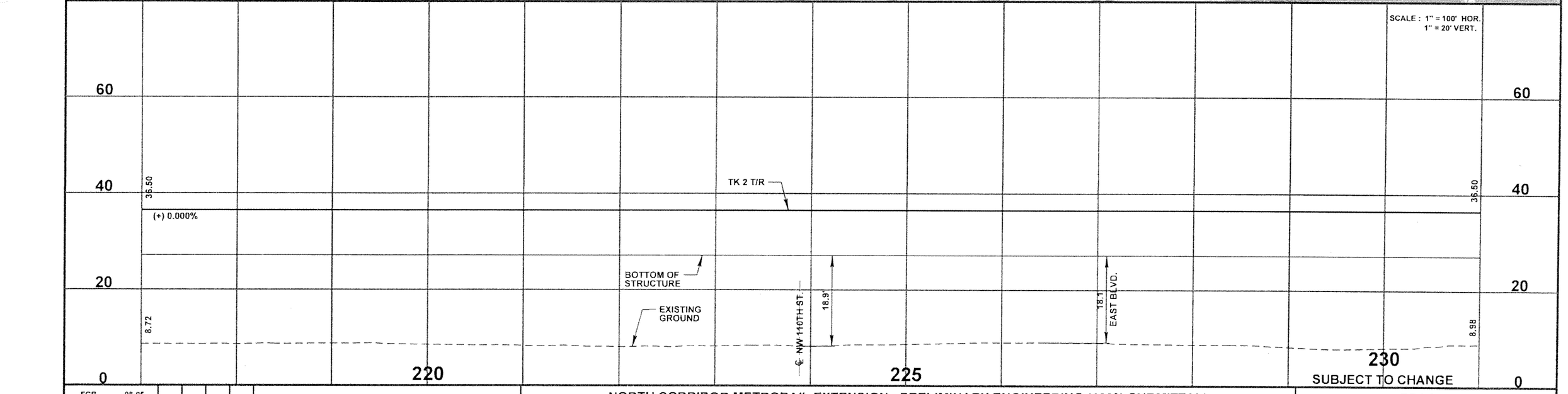

FCB	08-05				
Designed by	Date				
ACh	04-06				
Drawn by	Date				
JAE	05-06				
Checked by	Date				
Approved by	Date	No.	Date	By / Chk	App.	Revisions

NORTH CORRIDOR METRORAIL EXTENSION - PRELIMINARY ENGINEERING (100% SUBMITTAL)

TRACK

MIAMI-DADE COUNTY

MIAMI-DADE TRANSIT

PARSONS
7600 CORPORATE CENTER DRIVE, SUITE 500
MIAMI, FLORIDA 33126
PHONE: (786) 464-1000 FAX: (786) 845-7119
CERTIFICATE OF AUTHORIZATION NO. 1836

Approved	Date	Approved	Date

PLAN AND PROFILE

Scale	Drawing	Sheet
HOR: 1" = 100'	TK - 010	23

05/15/2006 10:47:54 AM s:\mdt_north\trackway\plprtk10.dgn

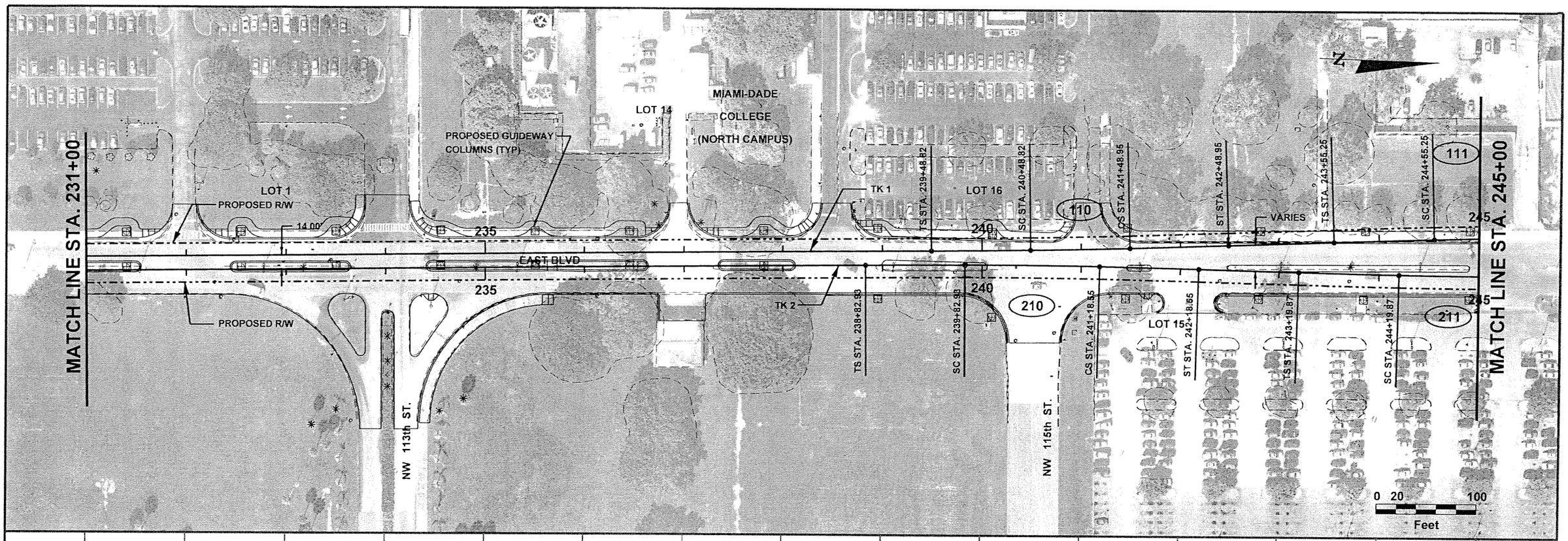

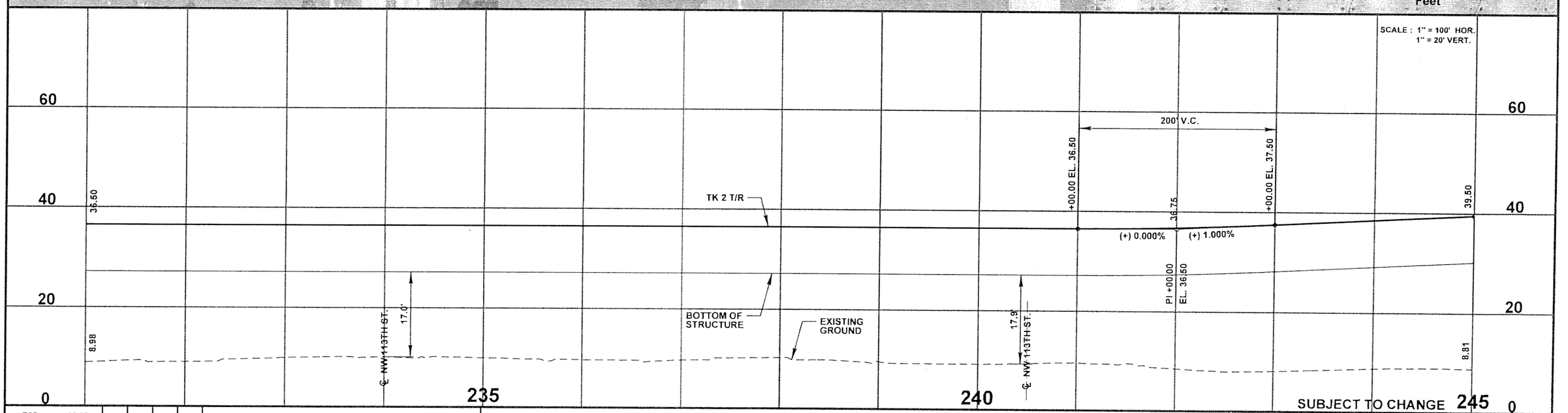

FCB	08-05				
Designed by	Date				
ACh	04-06				
Drawn by	Date				
JAE	05-06				
Checked by	Date				
Approved by	Date	No.	Date	By / Chk	App.	Revisions

NORTH CORRIDOR METRORAIL EXTENSION - PRELIMINARY ENGINEERING (100% SUBMITTAL)

MIAMI-DADE COUNTY

MIAMI-DADE TRANSIT

PARSONS
7600 CORPORATE CENTER DRIVE, SUITE 500
MIAMI, FLORIDA 33126
PHONE: (786) 464-1000 FAX: (786) 845-7119
CERTIFICATE OF AUTHORIZATION NO. 1836

Approved | Date

Approved | Date

TRACK

PLAN AND PROFILE

Scale HOR: 1" = 100' | Drawing TK - 011 | Sheet 24

05/15/2006 10:48:17 AM s:\mdt_north\trackway\plprtk11.dgn

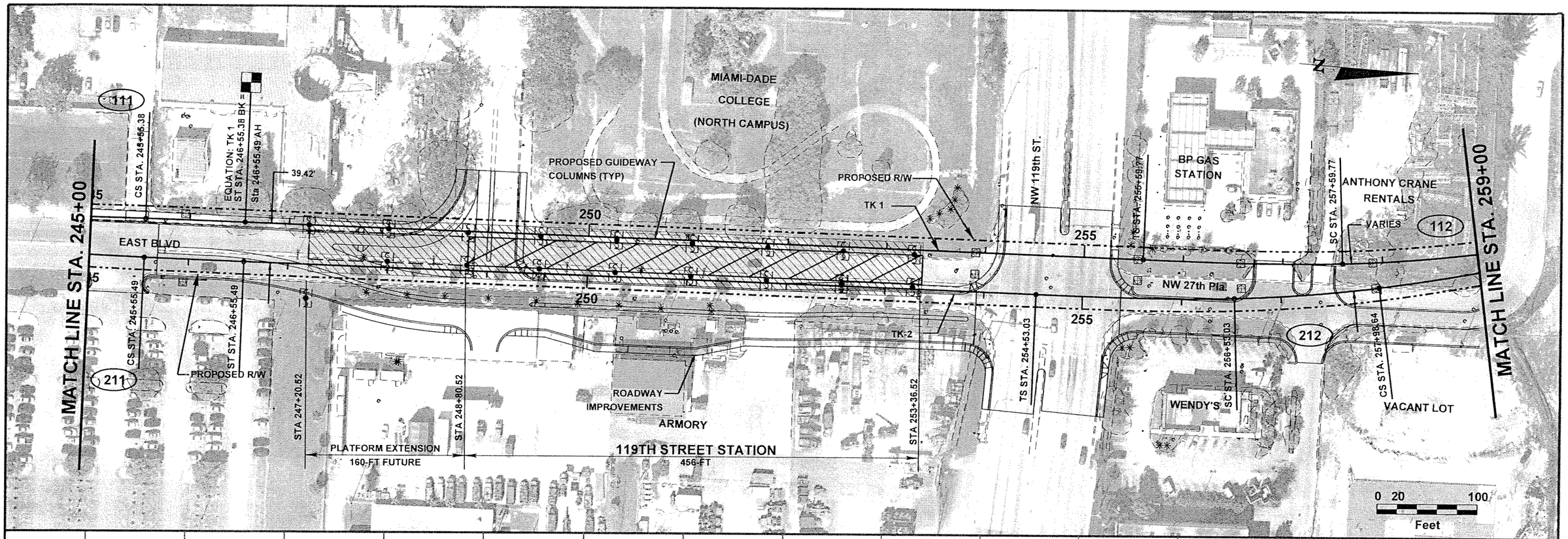

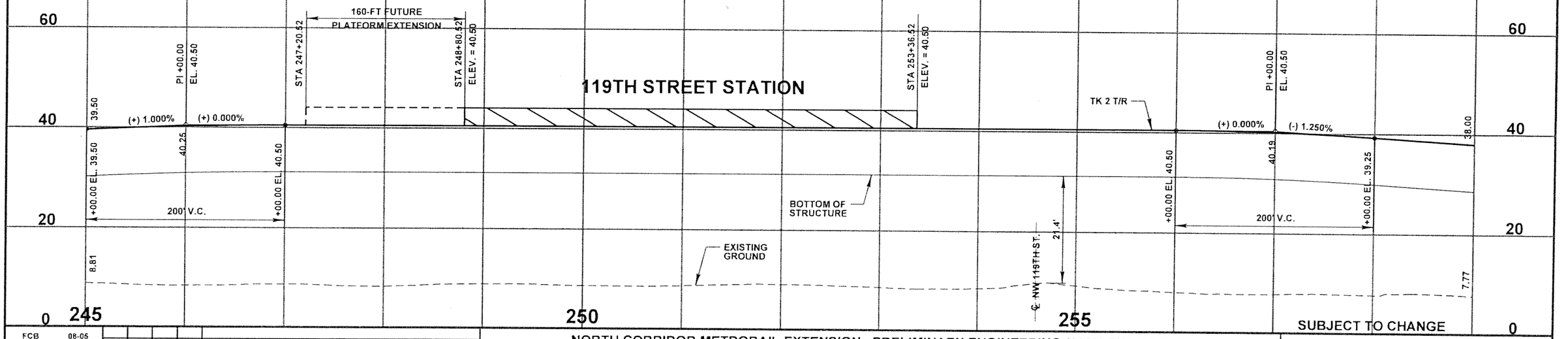

FCB 08-05 Designed by Date
ACh 04-06 Drawn by Date
JAE 05-06 Checked by Date
Approved by Date

No.	Date	By / Chk.	App.	Revisions

NORTH CORRIDOR METRORAIL EXTENSION - PRELIMINARY ENGINEERING (100% SUBMITTAL)

MIAMI-DADE COUNTY
MIAMI-DADE TRANSIT

PARSONS
7600 CORPORATE CENTER DRIVE, SUITE 500
MIAMI, FLORIDA 33126
PHONE: (786) 464-1000 FAX: (786) 845-7119
CERTIFICATE OF AUTHORIZATION NO. 1838

Approved Date
Approved Date

TRACK

PLAN AND PROFILE

Scale HOR: 1" = 100' Drawing TK - 012 Sheet 25

05/15/2006 10:48:43 AM

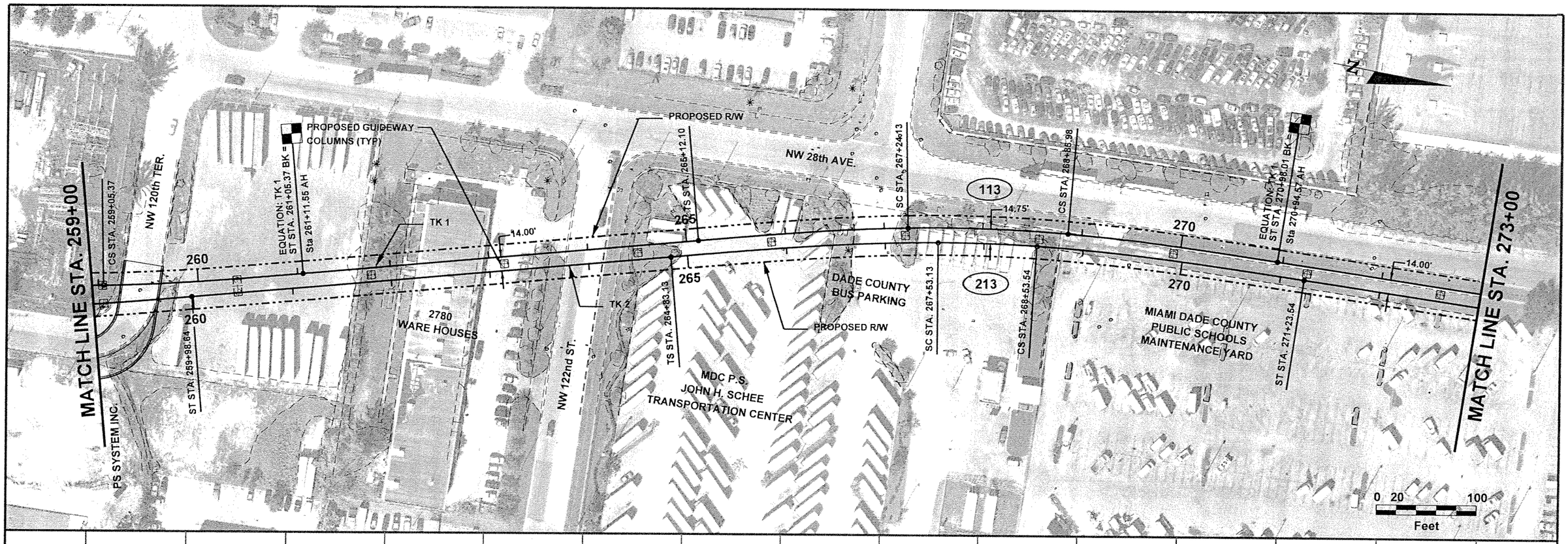

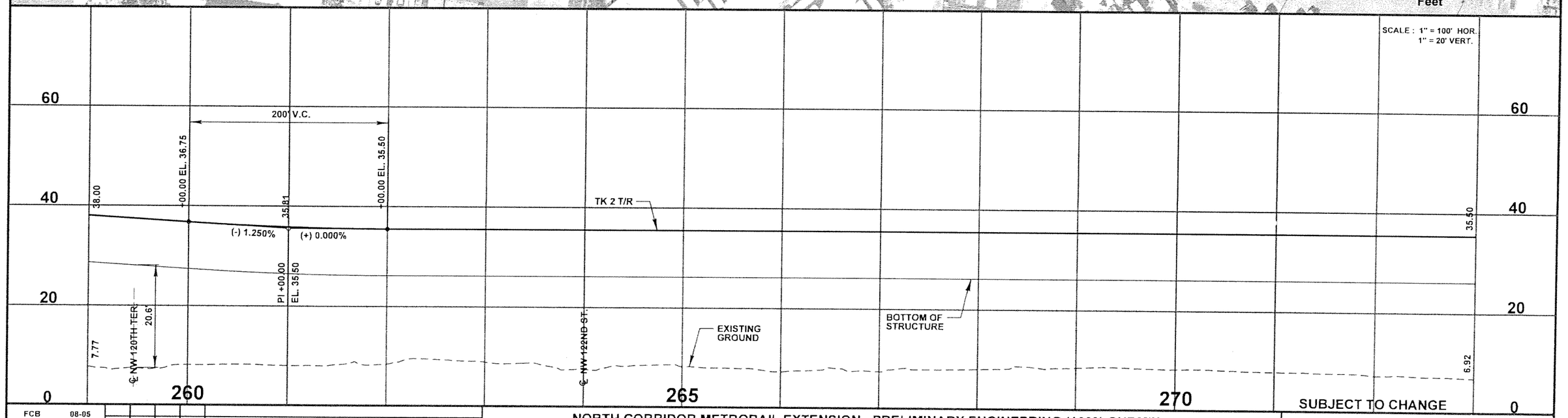

FCB	08-05						
Designed by	Date						
ACh	04-06						
Drawn by	Date						
JAE	05-06						
Checked by	Date						
Approved by	Date	No.	Date	By / Chk	App.	Revisions	

NORTH CORRIDOR METRORAIL EXTENSION - PRELIMINARY ENGINEERING (100% SUBMITTAL)

TRACK

MIAMI-DADE COUNTY

MIAMI-DADE TRANSIT

PARSONS
7600 CORPORATE CENTER DRIVE, SUITE 500
MIAMI, FLORIDA 33126
PHONE: (786) 464-1000 FAX: (786) 845-7119
CERTIFICATE OF AUTHORIZATION NO. 1838

PLAN AND PROFILE

Approved	Date	Approved	Date	Scale	Drawing	Sheet
				HOR: 1" = 100'	TK - 013	26

05/15/2006 10:49:13 AM s:\mdt_north\trackway\plan\tk13.dgn

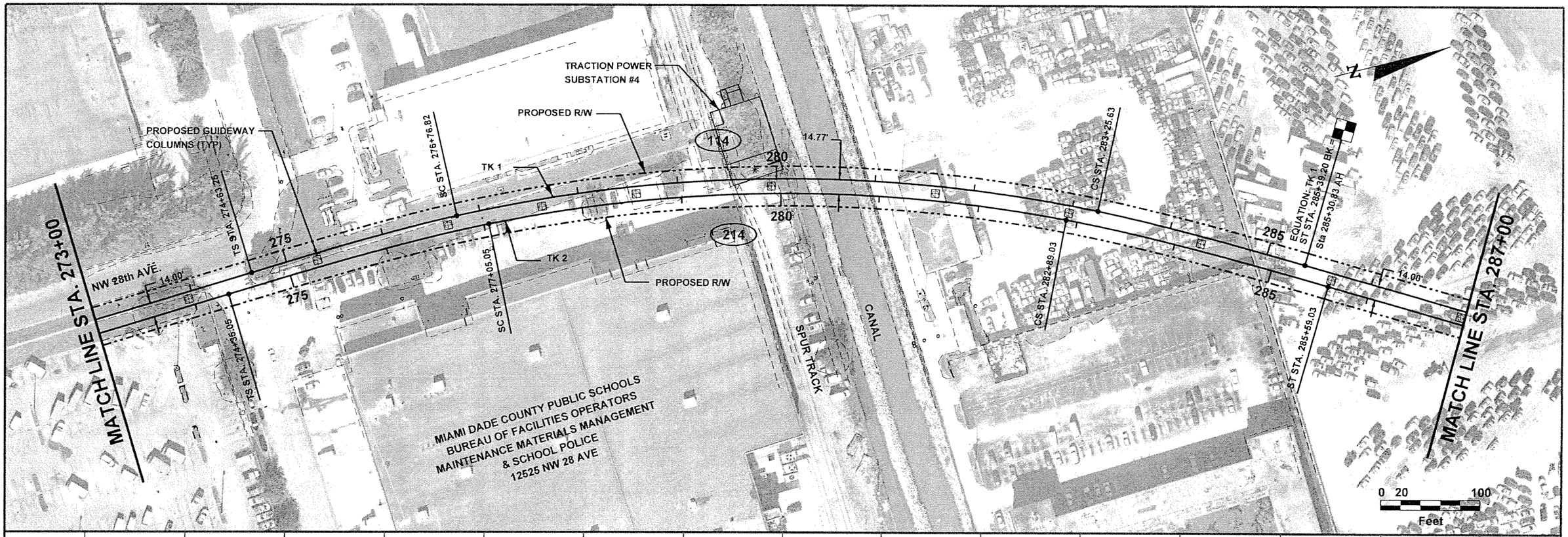

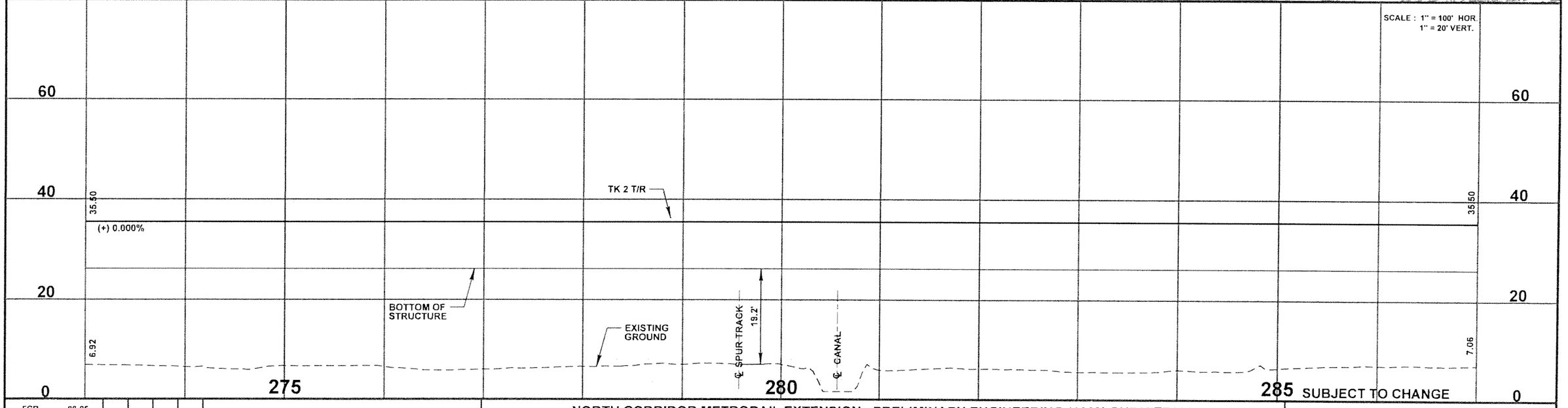

FCB	08-05					
Designed by	Date					
ACh	04-06					
Drawn by	Date					
JAE	05-06					
Checked by	Date					
Approved by	Date	No.	Date	By / Chk	App	Revisions

NORTH CORRIDOR METRORAIL EXTENSION - PRELIMINARY ENGINEERING (100% SUBMITTAL)

TRACK

MIAMI-DADE COUNTY

MIAMI-DADE TRANSIT

PARSONS
7600 CORPORATE CENTER DRIVE, SUITE 500
MIAMI, FLORIDA 33126
PHONE: (786) 464-1000 FAX: (786) 845-7119
CERTIFICATE OF AUTHORIZATION NO. 1836

Approved | Date | Approved | Date

PLAN AND PROFILE

Scale HOR: 1" = 100' | Drawing TK - 014 | Sheet 27

05/15/2006 10:49:42 AM s:\mdt_north\trackway\plp\tk14.dgn

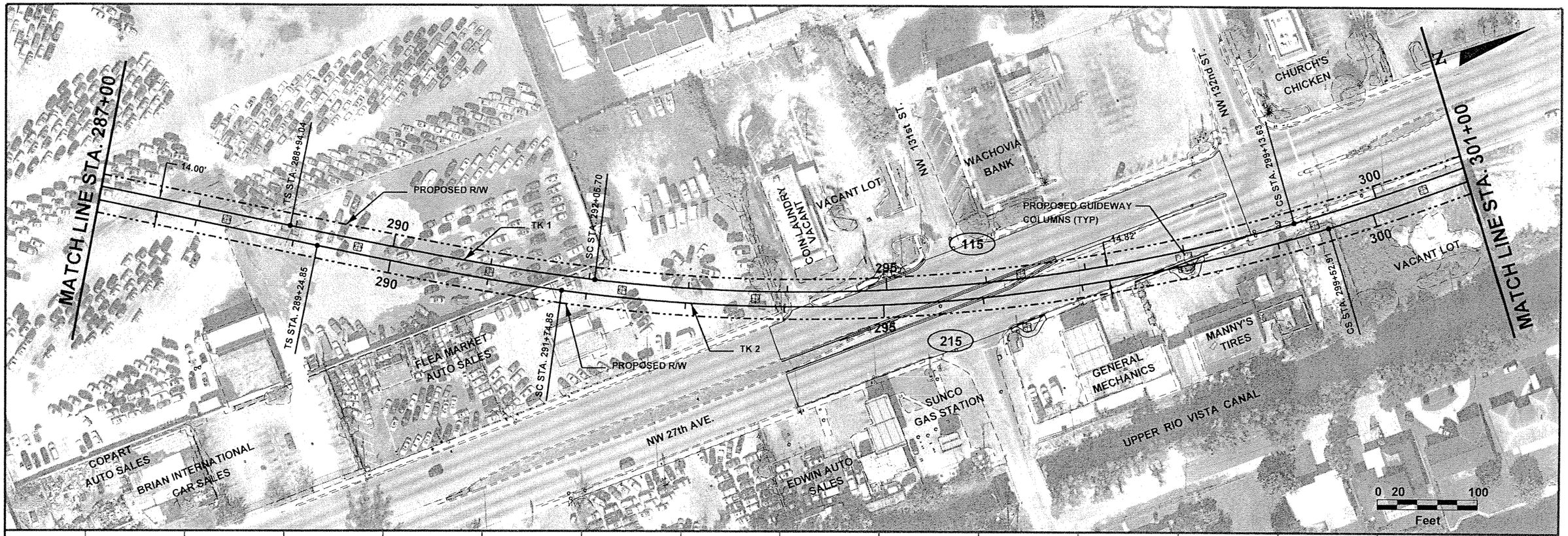

SCALE : 1" = 100' HOR.
1" = 20' VERT.

FCB	08-05	Designed by	Date		
ACh	04-06	Drawn by	Date		
JAE	05-06	Checked by	Date		
		Approved by	Date		

No.	Date	By / Chk	App.	Revisions

NORTH CORRIDOR METRORAIL EXTENSION - PRELIMINARY ENGINEERING (100% SUBMITTAL)

TRACK

MIAMI-DADE COUNTY

MIAMI-DADE TRANSIT

PARSONS
7600 CORPORATE CENTER DRIVE, SUITE 500
MIAMI, FLORIDA 33126
PHONE: (786) 464-1000 FAX: (786) 845-7119
CERTIFICATE OF AUTHORIZATION NO. 1838

Approved | Date

Approved | Date

PLAN AND PROFILE

Scale HOR: 1" = 100' | Drawing TK - 015 | Sheet 28

05/15/2006 10:50:11 AM s:\mdt_north\trackway\plprtk15.dgn

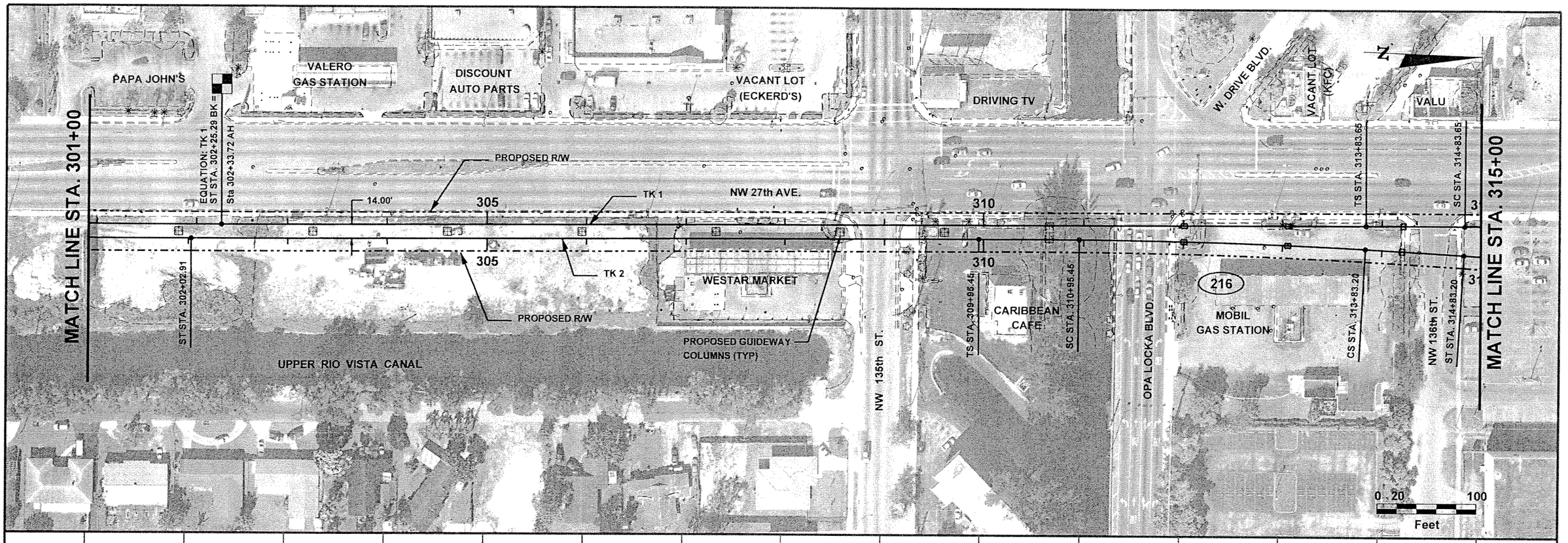

FCB	08-05						
Designed by	Date						
ACh	04-06						
Drawn by	Date						
JAE	05-06						
Checked by	Date						
Approved by	Date	No.	Date	By / Chk	App.	Revisions	

NORTH CORRIDOR METRORAIL EXTENSION - PRELIMINARY ENGINEERING (100% SUBMITTAL)

MIAMI-DADE COUNTY

MIAMI-DADE TRANSIT

PARSONS
7600 CORPORATE CENTER DRIVE, SUITE 500
MIAMI, FLORIDA 33126
PHONE: (786) 454-1000 FAX: (786) 845-7119
CERTIFICATE OF AUTHORIZATION NO. 1838

Approved	Date	Approved	Date

TRACK

PLAN AND PROFILE

Scale	Drawing	Sheet
HOR: 1" = 100'	TK - 016	29

05/15/2006 10:50:30 AM s:\mdt_northtrackway\plan\tk16.dgn

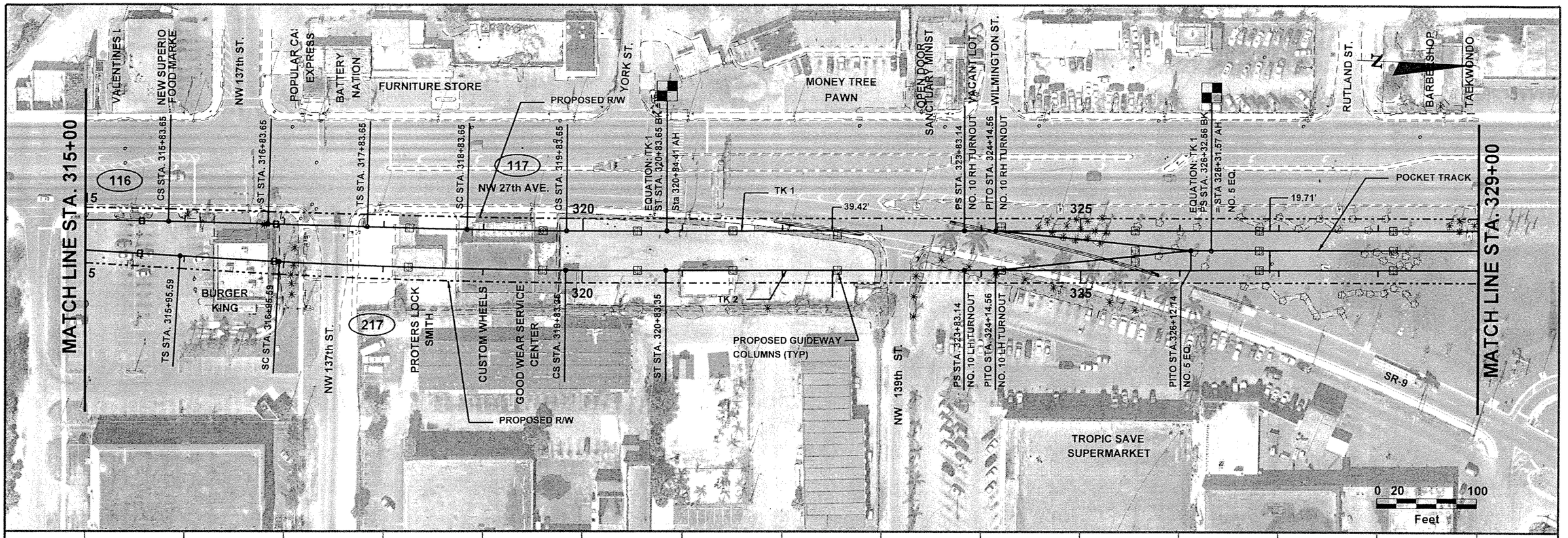

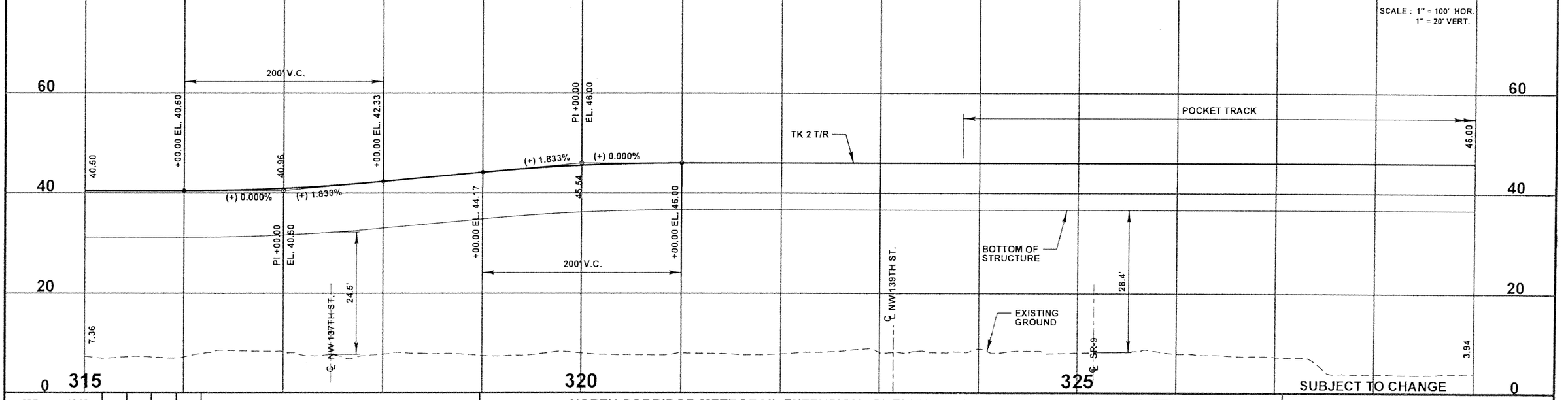

FCB	08-05						
Designed by	Date						
ACh	04-06						
Drawn by	Date						
JAE	05-06						
Checked by	Date						
Approved by	Date	No.	Date	By / Chk	App.	Revisions	

NORTH CORRIDOR METRORAIL EXTENSION - PRELIMINARY ENGINEERING (100% SUBMITTAL)

TRACK

MIAMI-DADE COUNTY

MIAMI-DADE TRANSIT

PARSONS
7600 CORPORATE CENTER DRIVE, SUITE 500
MIAMI, FLORIDA 33126
PHONE: (786) 464-1000 FAX: (786) 845-7119
CERTIFICATE OF AUTHORIZATION NO. 1838

Approved	Date	Approved	Date

PLAN AND PROFILE

Scale	Drawing	Sheet
HOR: 1" = 100'	TK - 017	30

05/15/2006 10:50:55 AM s:\mdt_north\trackway\plprtk17.dgn

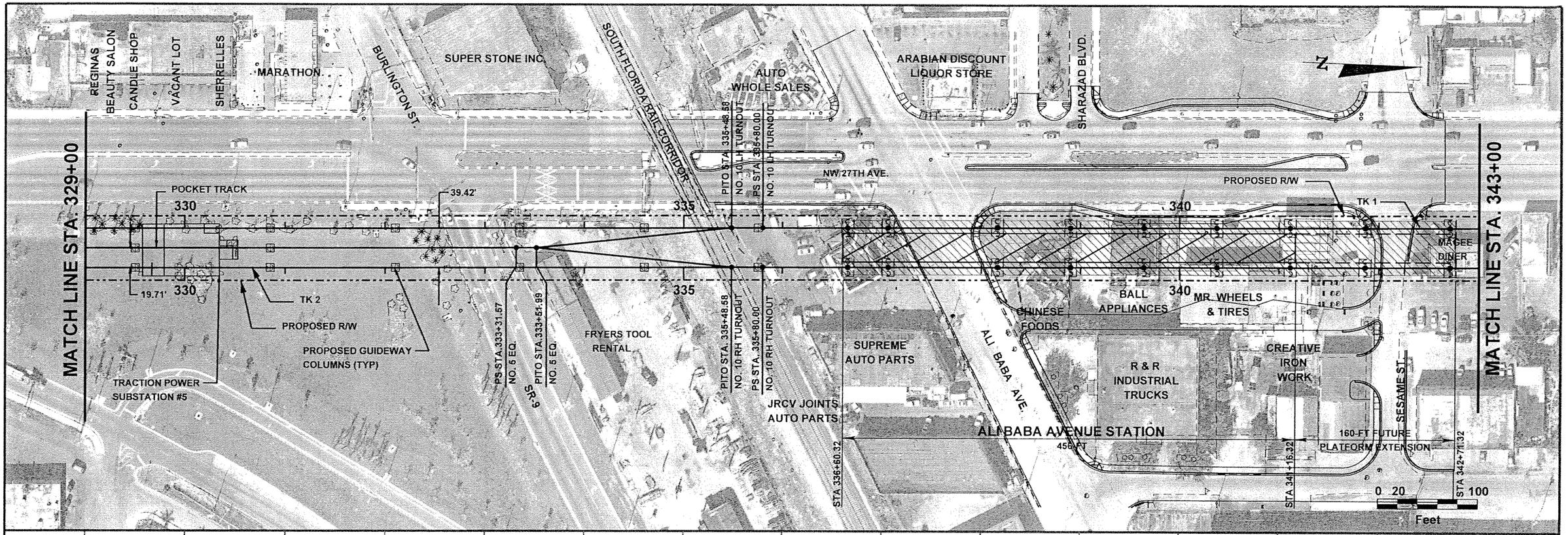

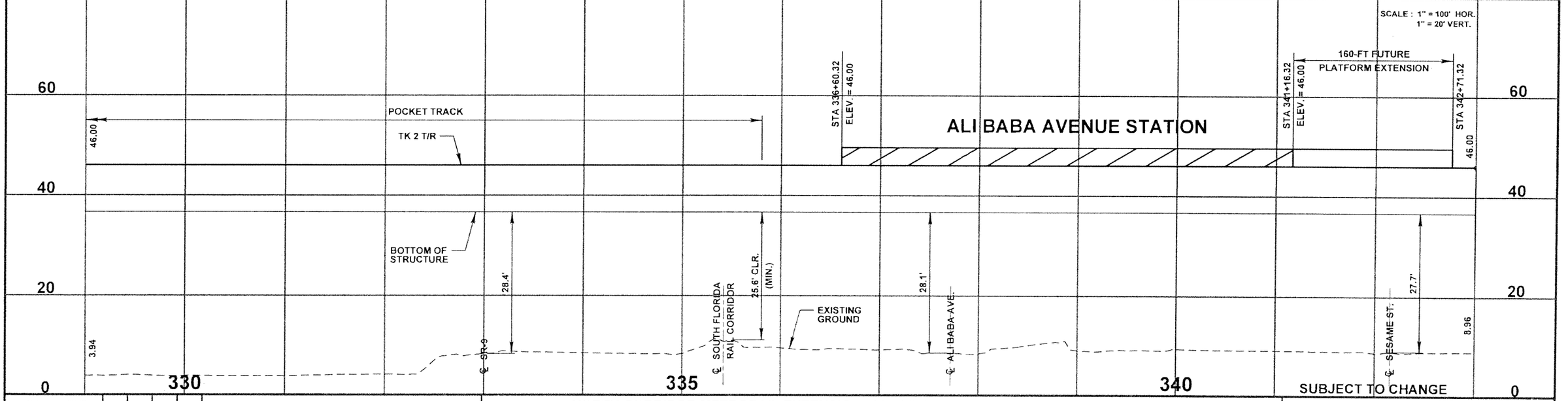

FCB	08-05						
Designed by	Date						
ACh	04-06						
Drawn by	Date						
JAE	05-06						
Checked by	Date						
Approved by	Date	No.	Date	By / Chk	App.	Revisions	

NORTH CORRIDOR METRORAIL EXTENSION - PRELIMINARY ENGINEERING (100% SUBMITTAL)

TRACK

MIAMI-DADE COUNTY

MIAMI-DADE TRANSIT

PARSONS
7600 CORPORATE CENTER DRIVE, SUITE 500
MIAMI, FLORIDA 33126
PHONE: (786) 464-1000 FAX: (786) 845-7119
CERTIFICATE OF AUTHORIZATION NO. 1838

Approved	Date	Approved	Date

SCALE : 1" = 100' HOR. 1" = 20' VERT.

PLAN AND PROFILE

Scale	Drawing	Sheet
HOR: 1" = 100'	TK - 018	31

05/15/2006 10:51:18 AM s:\mdt_north\trackway\plprtk18.dgn

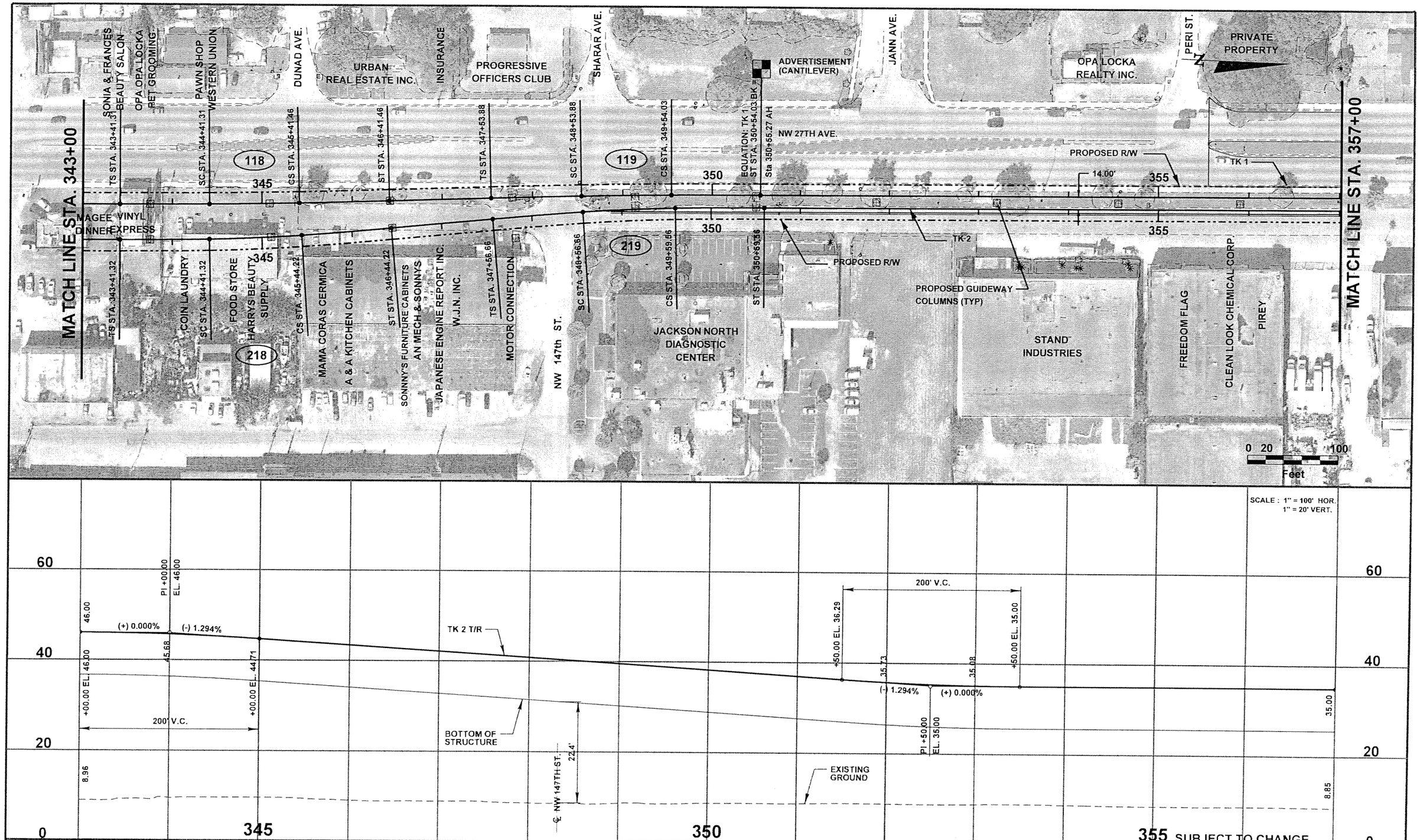

FCB	08-05					
Designed by	Date					
ACh	04-06					
Drawn by	Date					
JAE	05-06					
Checked by	Date					
Approved by	Date	No.	Date	By / Chk	App.	Revisions

NORTH CORRIDOR METRORAIL EXTENSION - PRELIMINARY ENGINEERING (100% SUBMITTAL)

MIAMI-DADE COUNTY

MIAMI-DADE TRANSIT

PARSONS
7600 CORPORATE CENTER DRIVE, SUITE 500
MIAMI, FLORIDA 33126
PHONE: (786) 464-1000 FAX: (786) 845-7119
CERTIFICATE OF AUTHORIZATION NO. 1838

Approved | Date | Approved | Date

TRACK

PLAN AND PROFILE

Scale HOR: 1" = 100' | Drawing TK - 019 | Sheet 32

05/15/2006 10:51:38 AM s:\mdt_north\trackway\plnrk19.dgn

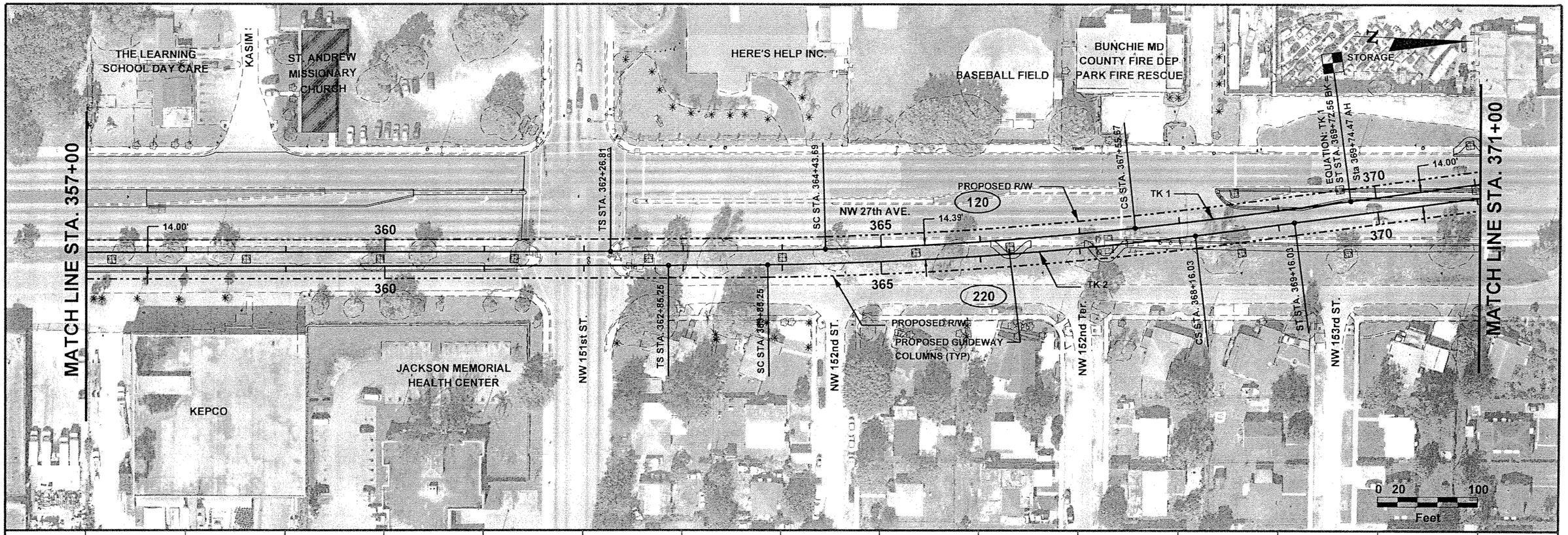

SCALE : 1" = 100' HOR.
1" = 20' VERT.

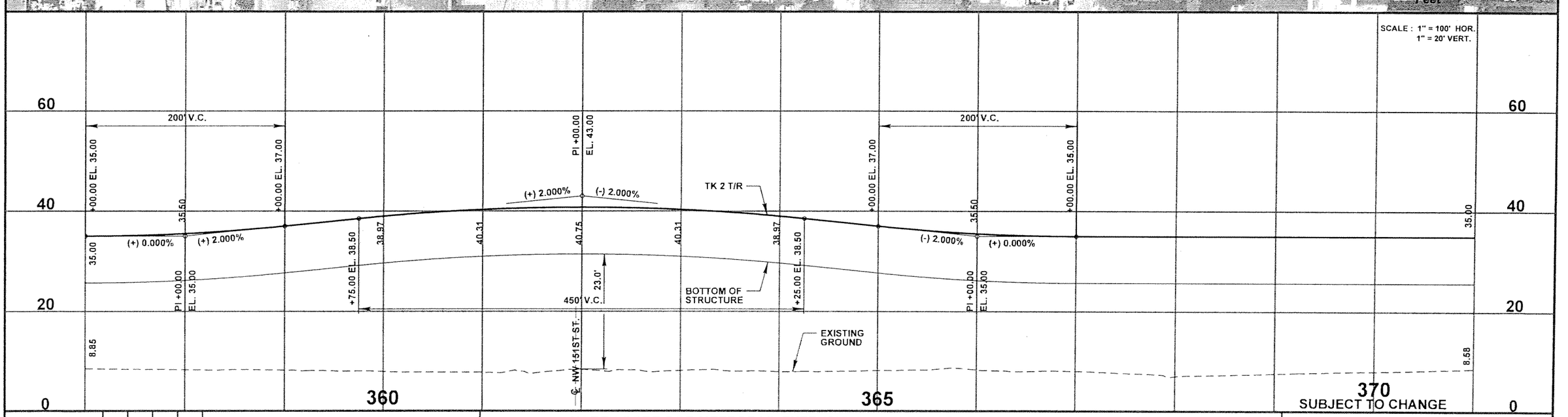

FCB	08-05						
Designed by	Date						
ACh	04-06						
Drawn by	Date						
JAE	05-06						
Checked by	Date						
Approved by	Date	No.	Date	By / Chk	App.	Revisions	

NORTH CORRIDOR METRORAIL EXTENSION - PRELIMINARY ENGINEERING (100% SUBMITTAL)

TRACK

MIAMI-DADE COUNTY

MIAMI-DADE TRANSIT

PARSONS
7600 CORPORATE CENTER DRIVE, SUITE 500
MIAMI, FLORIDA 33126
PHONE: (786) 464-1000 FAX: (786) 845-7119
CERTIFICATE OF AUTHORIZATION NO. 1838

Approved	Date	Approved	Date

PLAN AND PROFILE

Scale	Drawing	Sheet
HOR: 1" = 100'	TK - 020	33

05/15/2006 10:51:58 AM s:\mdt_north\trackway\plprtk20.dgn

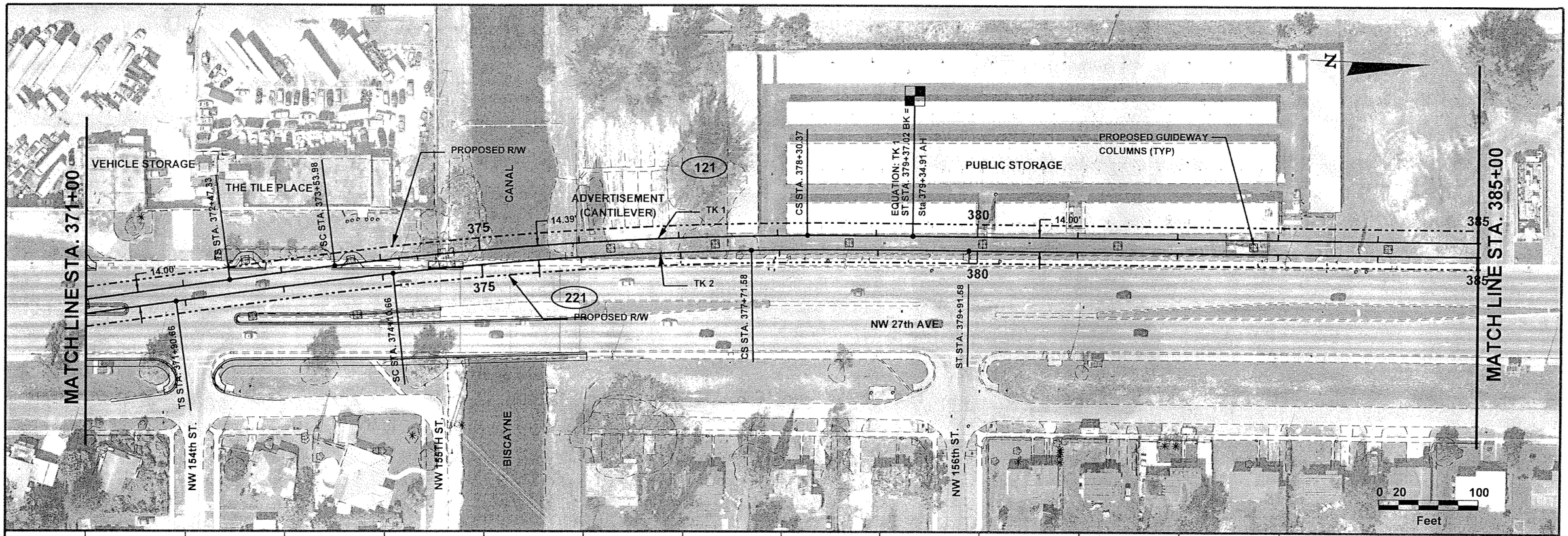

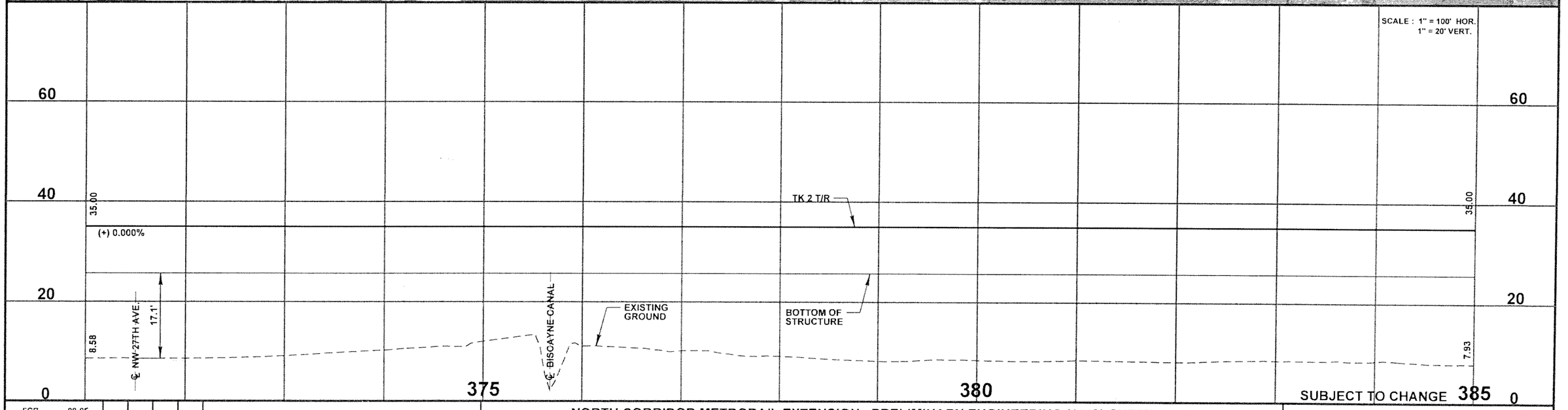

FCB	08-05				
Designed by	Date				
ACh	04-06				
Drawn by	Date				
JAE	05-06				
Checked by	Date				
Approved by	Date	No.	Date	By / Chk	App. Revisions

NORTH CORRIDOR METRORAIL EXTENSION - PRELIMINARY ENGINEERING (100% SUBMITTAL)

MIAMI-DADE COUNTY

MIAMI-DADE TRANSIT

PARSONS
7500 CORPORATE CENTER DRIVE, SUITE 500
MIAMI, FLORIDA 33126
PHONE: (786) 464-1000 FAX: (786) 845-7119
CERTIFICATE OF AUTHORIZATION NO. 1838

Approved | Date | Approved | Date

TRACK

PLAN AND PROFILE

Scale HOR: 1" = 100' | Drawing TK - 021 | Sheet 34

05/15/2006 10:52:21 AM s:\mdt_north\trackway\plprtk21.dgn

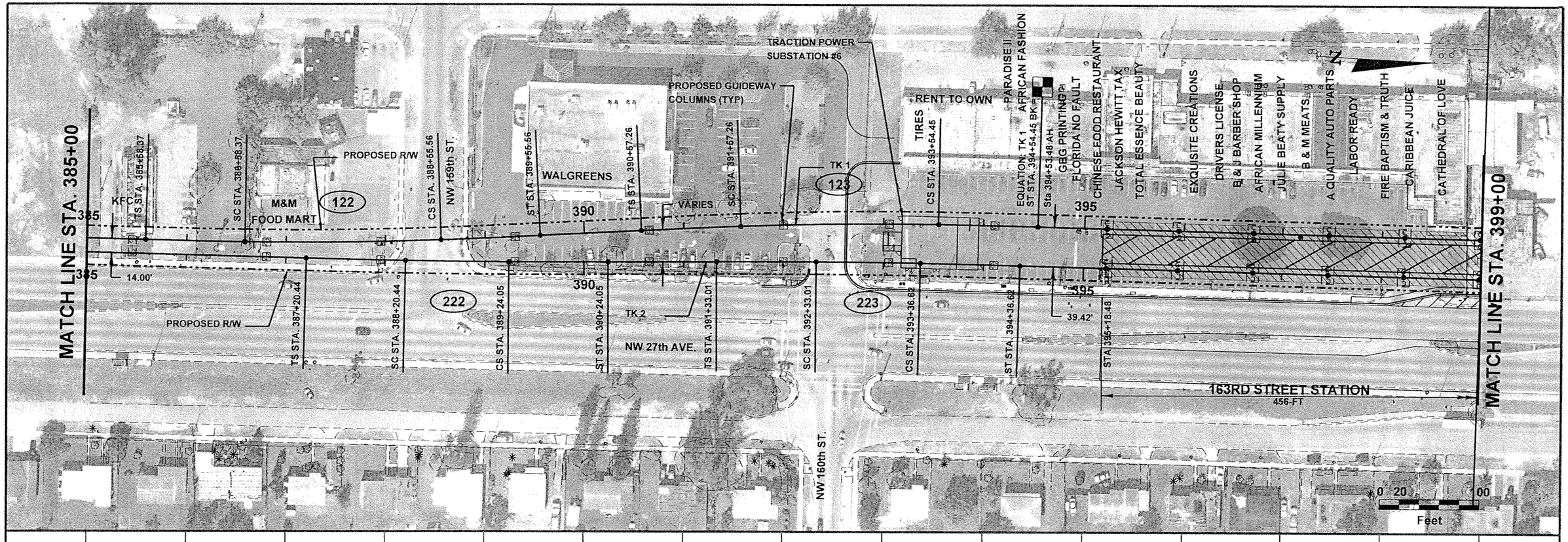

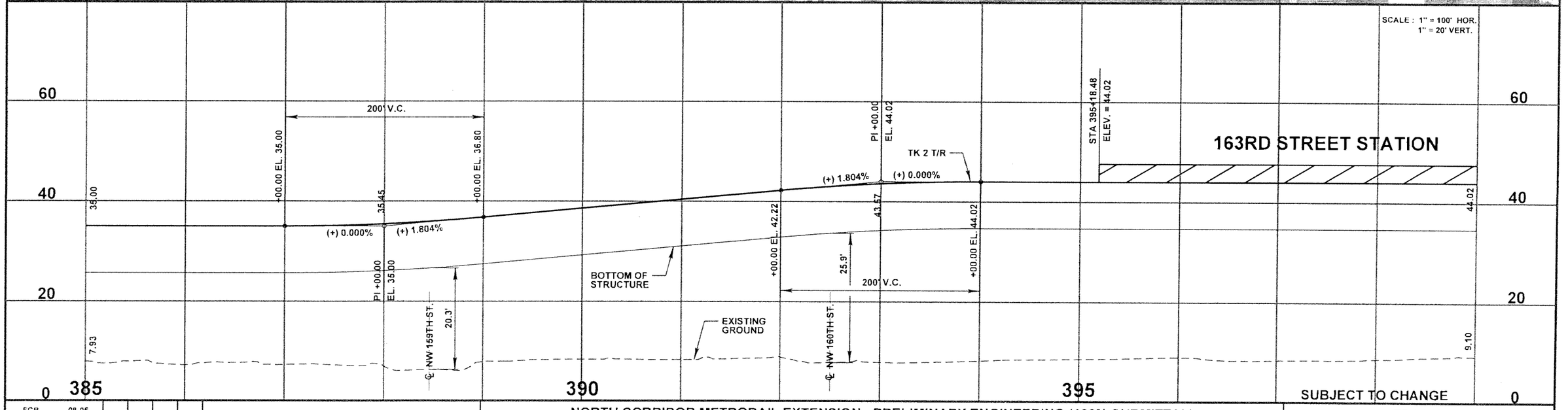

FCB	08-05						
Designed by	Date						
ACh	04-06						
Drawn by	Date						
JAE	05-06						
Checked by	Date						
Approved by	Date	No.	Date	By / Chk	App.	Revisions	

NORTH CORRIDOR METRORAIL EXTENSION - PRELIMINARY ENGINEERING (100% SUBMITTAL)

TRACK

MIAMI-DADE COUNTY

MIAMI-DADE TRANSIT

PARSONS
7600 CORPORATE CENTER DRIVE, SUITE 500
MIAMI, FLORIDA 33126
PHONE: (786) 464-1000 FAX: (786) 845-7119
CERTIFICATE OF AUTHORIZATION NO. 1838

Approved | Date | Approved | Date

PLAN AND PROFILE

Scale: HOR: 1" = 100' | Drawing: TK - 022 | Sheet: 35

05/15/2006 10:52:45 AM s:\mdt_north\trackway\plprtk22.dgn

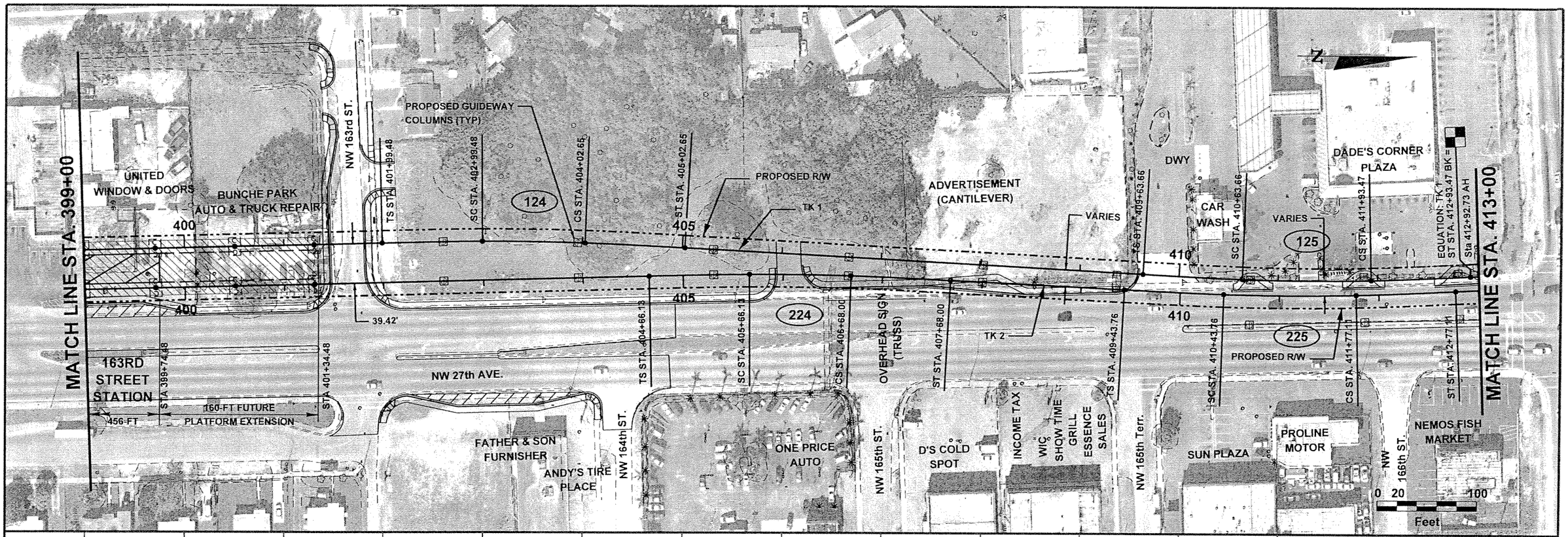

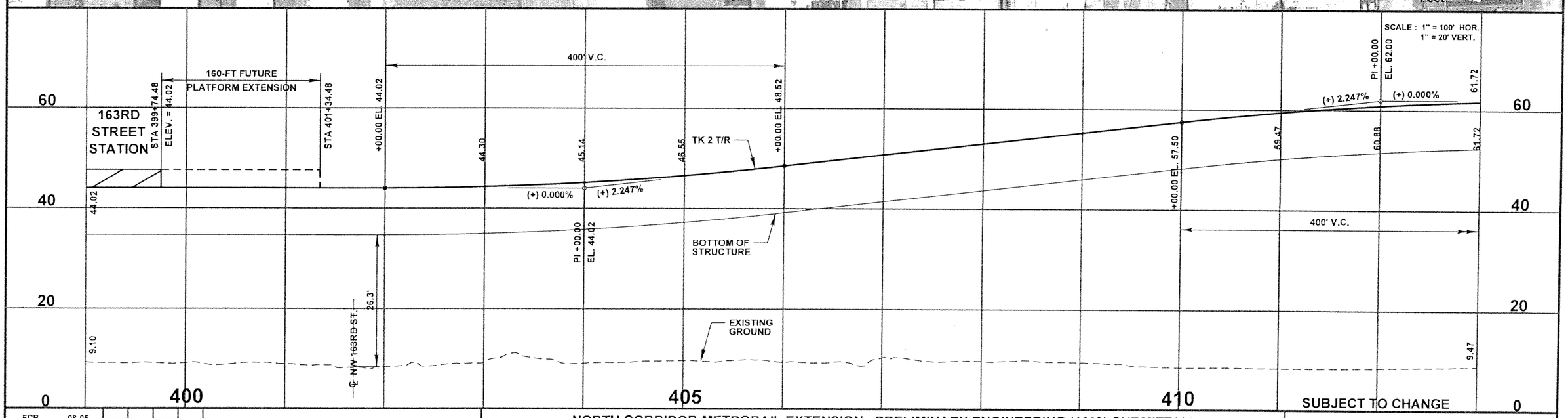

FCB	08-05					
Designed by	Date					
ACh	04-06					
Drawn by	Date					
JAE	05-06					
Checked by	Date					
Approved by	Date	No.	Date	By / Chk	App.	Revisions

NORTH CORRIDOR METRORAIL EXTENSION - PRELIMINARY ENGINEERING (100% SUBMITTAL)

TRACK

MIAMI-DADE COUNTY

MIAMI-DADE TRANSIT

PARSONS
7600 CORPORATE CENTER DRIVE, SUITE 500
MIAMI, FLORIDA 33126
PHONE: (786) 464-1000 FAX: (786) 845-7119
CERTIFICATE OF AUTHORIZATION NO. 1838

Approved	Date	Approved	Date

PLAN AND PROFILE

Scale: HOR: 1" = 100' | Drawing: TK - 023 | Sheet: 36

05/15/2006 10:53:06 AM s:\mdt_north\trackway\plprtk23.dgn

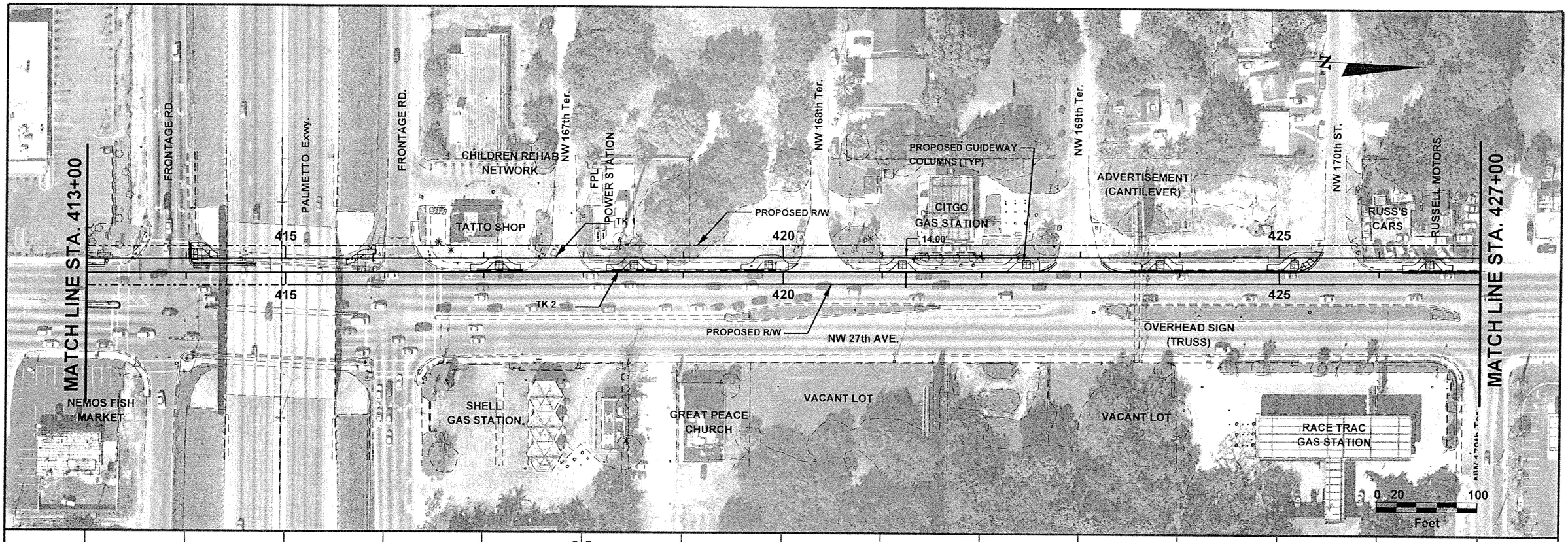

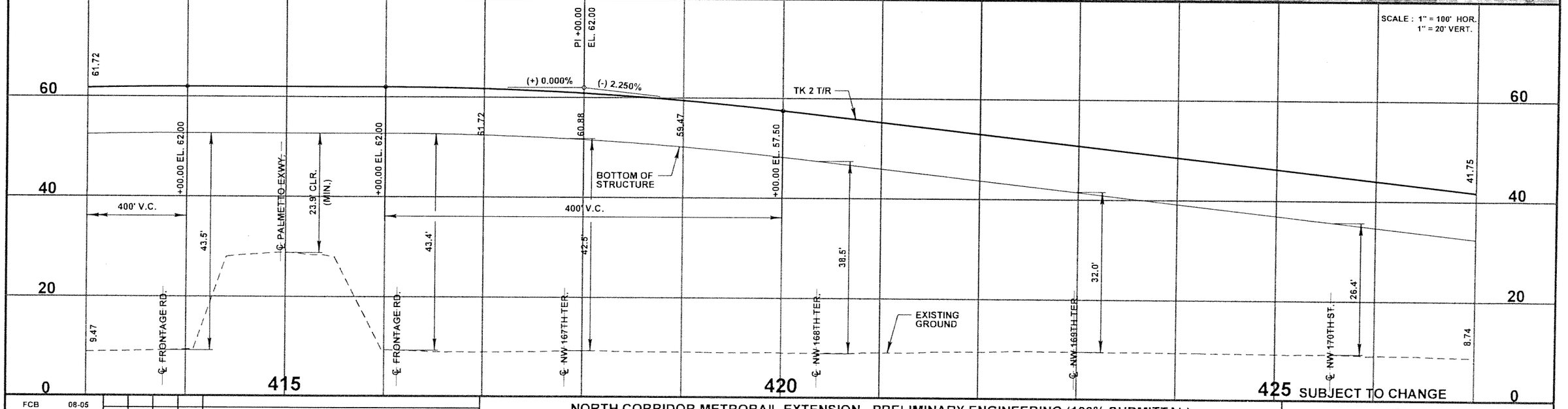

FCB	08-05					
Designed by	Date					
ACh	04-06					
Drawn by	Date					
JAE	05-06					
Checked by	Date					
Approved by	Date	No.	Date	By / Chk	App.	Revisions

NORTH CORRIDOR METRORAIL EXTENSION - PRELIMINARY ENGINEERING (100% SUBMITTAL)

TRACK

MIAMI-DADE COUNTY

MIAMI-DADE TRANSIT

PARSONS
7600 CORPORATE CENTER DRIVE, SUITE 500
MIAMI, FLORIDA 33126
PHONE: (786) 464-1000 FAX: (786) 845-7119
CERTIFICATE OF AUTHORIZATION NO. 1838

Approved | Date

Approved | Date

PLAN AND PROFILE

Scale: HOR: 1" = 100' | Drawing: TK - 024 | Sheet: 37

05/15/2006 10:53:30 AM s:\mdt_northtrackway\plan\tk24.dgn

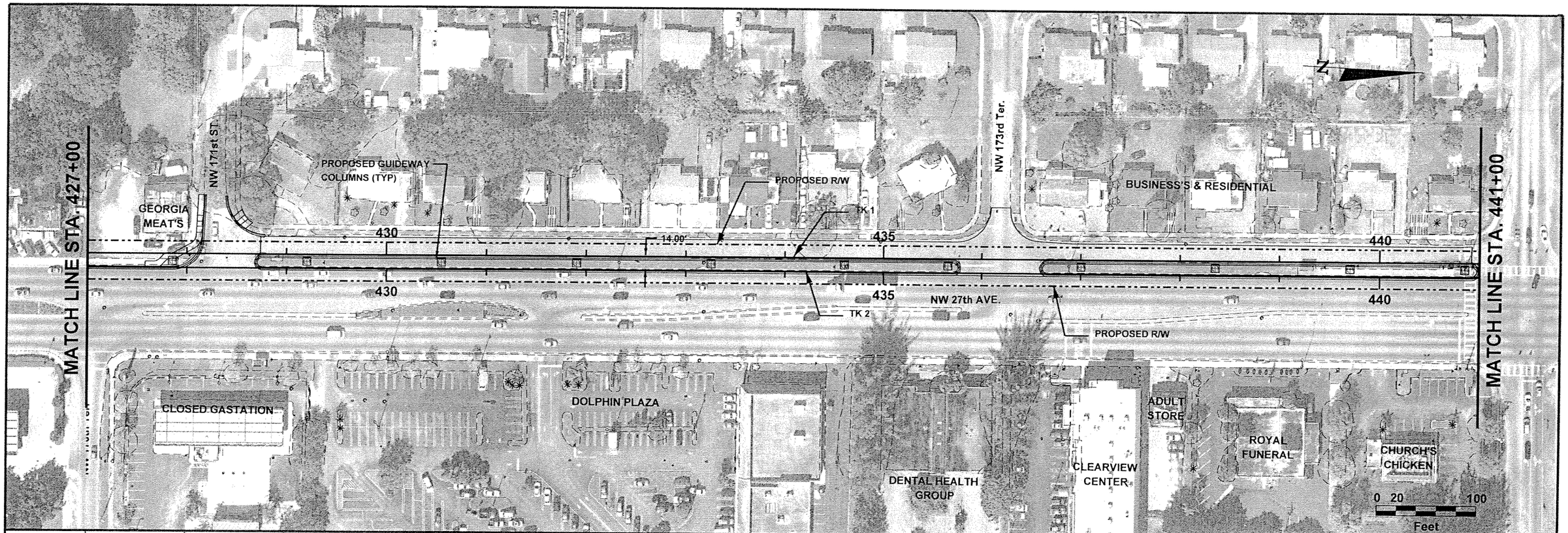

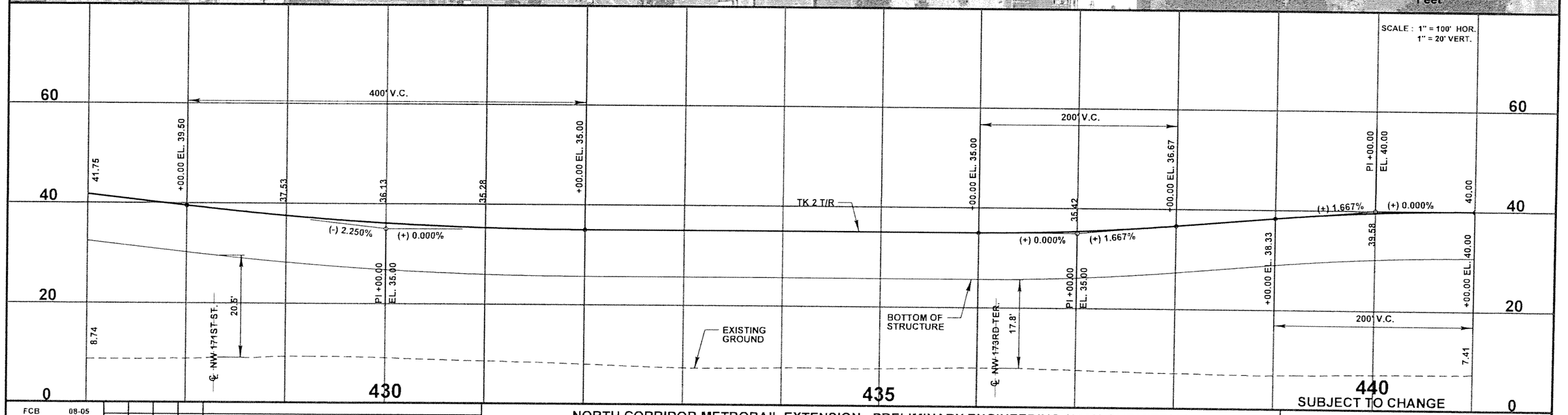

FCB	08-05					
Designed by	Date					
ACh	04-06					
Drawn by	Date					
JAE	05-06					
Checked by	Date					
Approved by	Date	No.	Date	By / Chk.	App.	Revisions

NORTH CORRIDOR METRORAIL EXTENSION - PRELIMINARY ENGINEERING (100% SUBMITTAL)

MIAMI-DADE COUNTY

MIAMI-DADE TRANSIT

PARSONS
7600 CORPORATE CENTER DRIVE, SUITE 500
MIAMI, FLORIDA 33126
PHONE: (786) 464-1000 FAX: (786) 845-7119
CERTIFICATE OF AUTHORIZATION NO. 1838

Approved | Date | Approved | Date

TRACK

PLAN AND PROFILE

Scale HOR: 1" = 100' | Drawing TK - 025 | Sheet 38

05/15/2006 10:53:55 AM

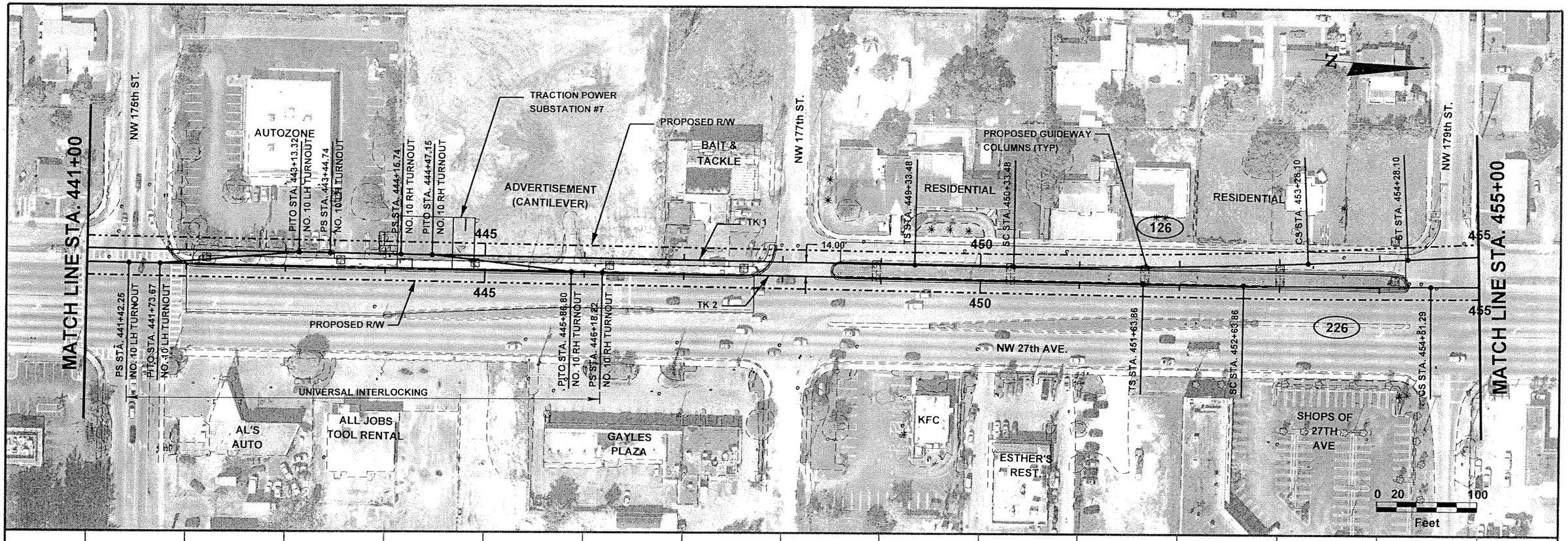

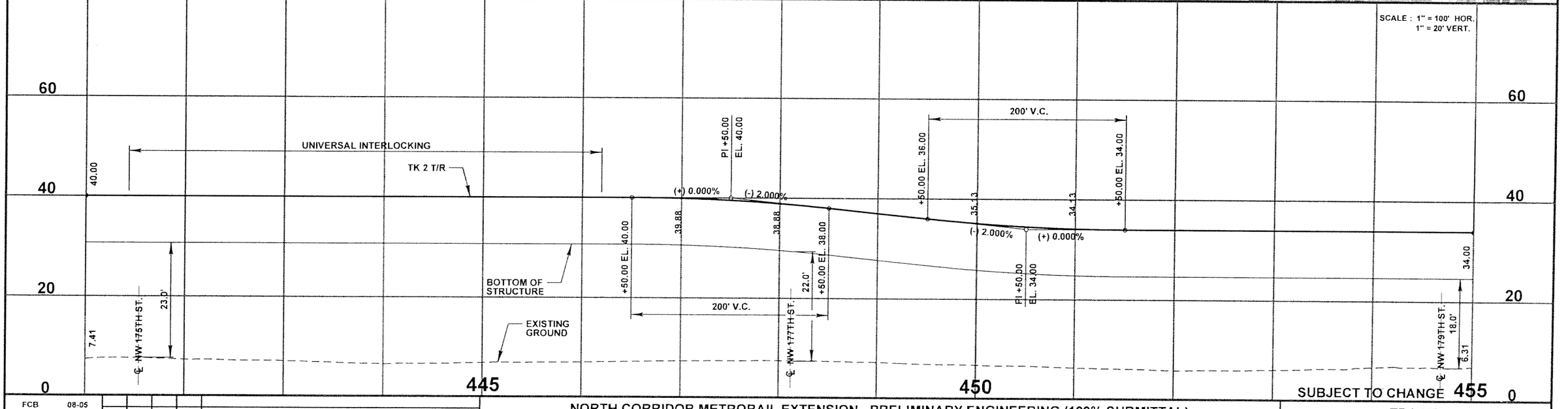

FCB	08-05						
Designed by	Date						
ACh	04-06						
Drawn by	Date						
JAE	05-06						
Checked by	Date						
Approved by	Date	No.	Date	By / Chk	App.	Revisions	

NORTH CORRIDOR METRORAIL EXTENSION - PRELIMINARY ENGINEERING (100% SUBMITTAL)

TRACK

MIAMI-DADE COUNTY

MIAMI-DADE TRANSIT

PARSONS
7600 CORPORATE CENTER DRIVE, SUITE 500
MIAMI, FLORIDA 33126
PHONE: (786) 464-1000 FAX: (786) 845-7119
CERTIFICATE OF AUTHORIZATION NO. 1838

Approved | Date | Approved | Date

PLAN AND PROFILE

Scale HOR: 1" = 100' | Drawing TK - 026 | Sheet 39

05/15/2006 10:54:22 AM s:\mdt_north\trackway\plan\tk26.dgn

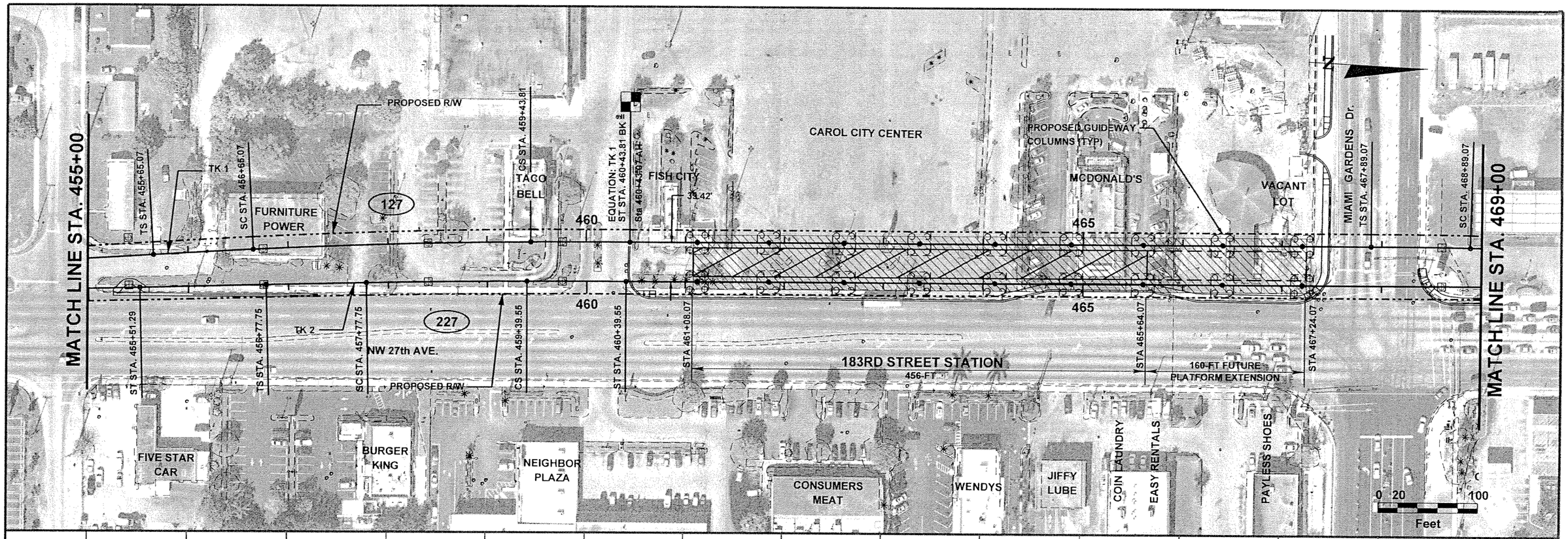

FCB	08-05					
Designed by	Date					
ACh	04-06					
Drawn by	Date					
JAE	05-06					
Checked by	Date					
Approved by	Date	No.	Date	By / Chk	App.	Revisions

NORTH CORRIDOR METRORAIL EXTENSION - PRELIMINARY ENGINEERING (100% SUBMITTAL)

TRACK

MIAMI-DADE COUNTY

MIAMI-DADE TRANSIT

PARSONS
7600 CORPORATE CENTER DRIVE, SUITE 500
MIAMI, FLORIDA 33126
PHONE: (786) 464-1000 FAX: (786) 845-7119
CERTIFICATE OF AUTHORIZATION NO. 1638

Approved	Date	Approved	Date
			05/15/2006 10:54:43 AM

PLAN AND PROFILE

Scale	Drawing	Sheet
HOR: 1" = 100'	TK - 027	40

s:\mdt_north\trackway\plan\t27.dgn

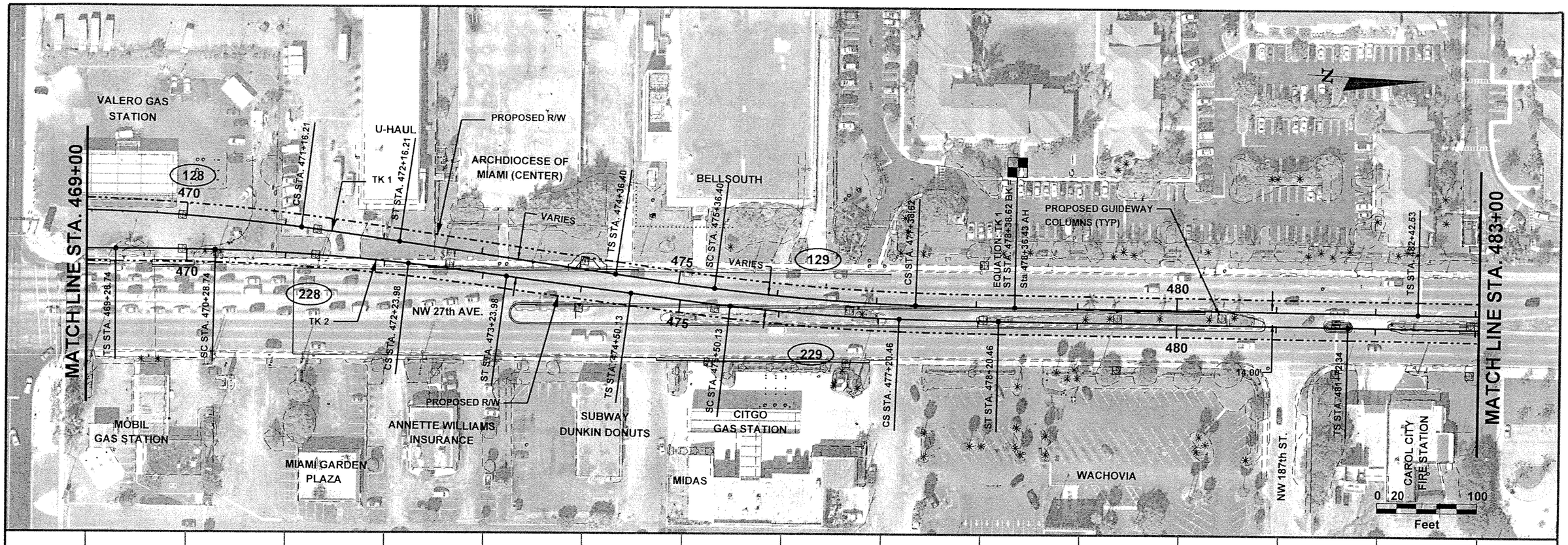

SCALE : 1" = 100' HOR.
1" = 20' VERT.

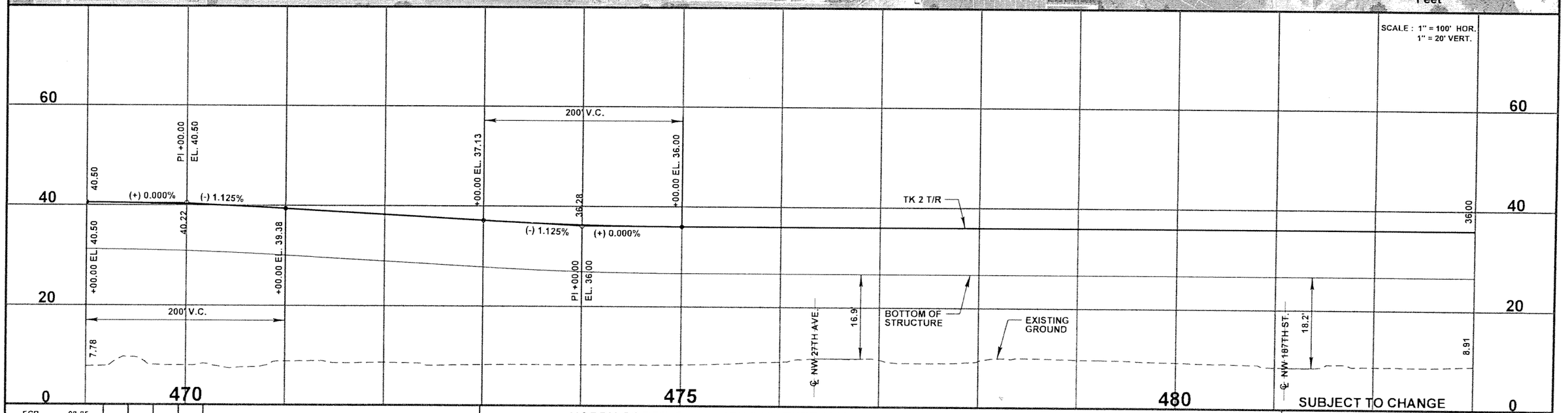

SUBJECT TO CHANGE

FCB	08-05					
Designed by	Date					
ACh	04-06					
Drawn by	Date					
JAE	05-06					
Checked by	Date					
Approved by	Date	No.	Date	By / Chk	App.	Revisions

NORTH CORRIDOR METRORAIL EXTENSION - PRELIMINARY ENGINEERING (100% SUBMITTAL)

TRACK

MIAMI-DADE COUNTY

MIAMI-DADE TRANSIT

PARSONS
7600 CORPORATE CENTER DRIVE, SUITE 500
MIAMI, FLORIDA 33126
PHONE: (786) 464-1000 FAX: (786) 845-7119
CERTIFICATE OF AUTHORIZATION NO. 1835

Approved | Date | Approved | Date

PLAN AND PROFILE

Scale HOR: 1" = 100' | Drawing TK - 028 | Sheet 47

05/15/2006 10:55:09 AM s:\mdt_north\trackway\plprtk28.dgn

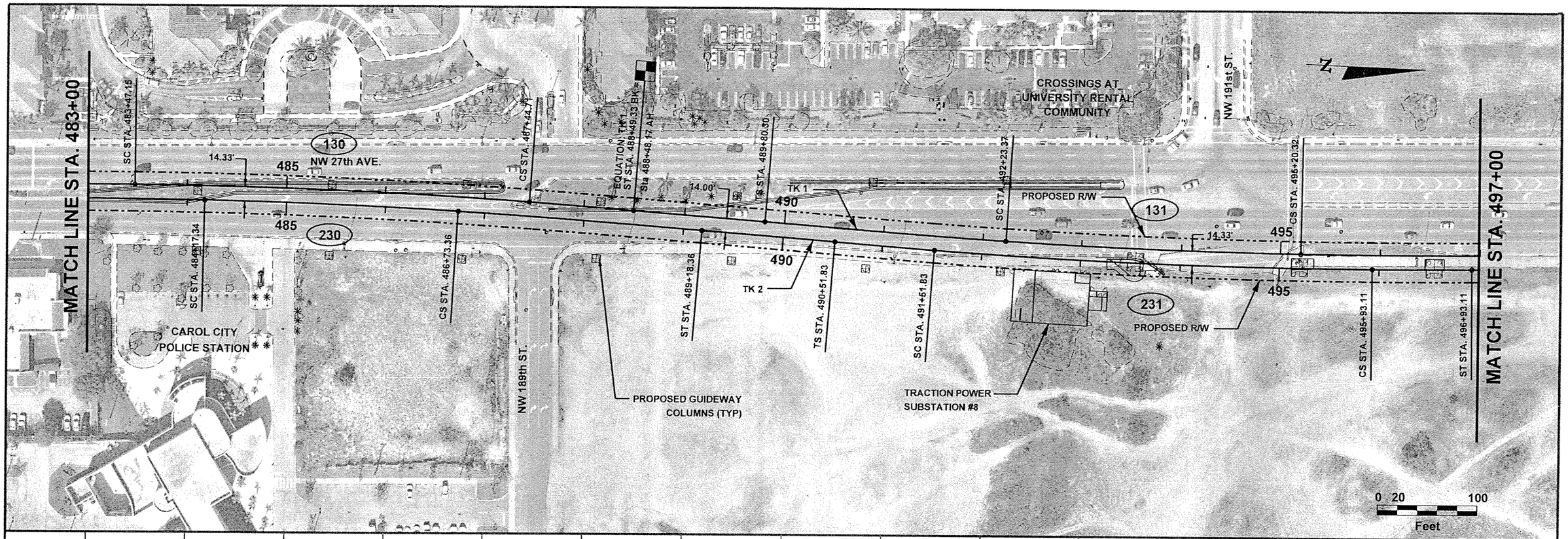

SCALE : 1" = 100' HOR.
1" = 20' VERT.

FCB	08-05						
Designed by	Date						
ACh	04-06						
Drawn by	Date						
JAE	05-06						
Checked by	Date						
Approved by	Date	No.	Date	By / Chk	App.	Revisions	

NORTH CORRIDOR METRORAIL EXTENSION - PRELIMINARY ENGINEERING (100% SUBMITTAL)

TRACK

MIAMI-DADE COUNTY

MIAMI-DADE TRANSIT

PARSONS
7600 CORPORATE CENTER DRIVE, SUITE 500
MIAMI, FLORIDA 33126
PHONE: (786) 454-1000 FAX: (786) 845-7119
CERTIFICATE OF AUTHORIZATION NO. 1638

Approved | Date | Approved | Date

PLAN AND PROFILE

Scale HOR: 1" = 100' | Drawing TK - 029 | Sheet 42

05/15/2006 10:55:49 AM

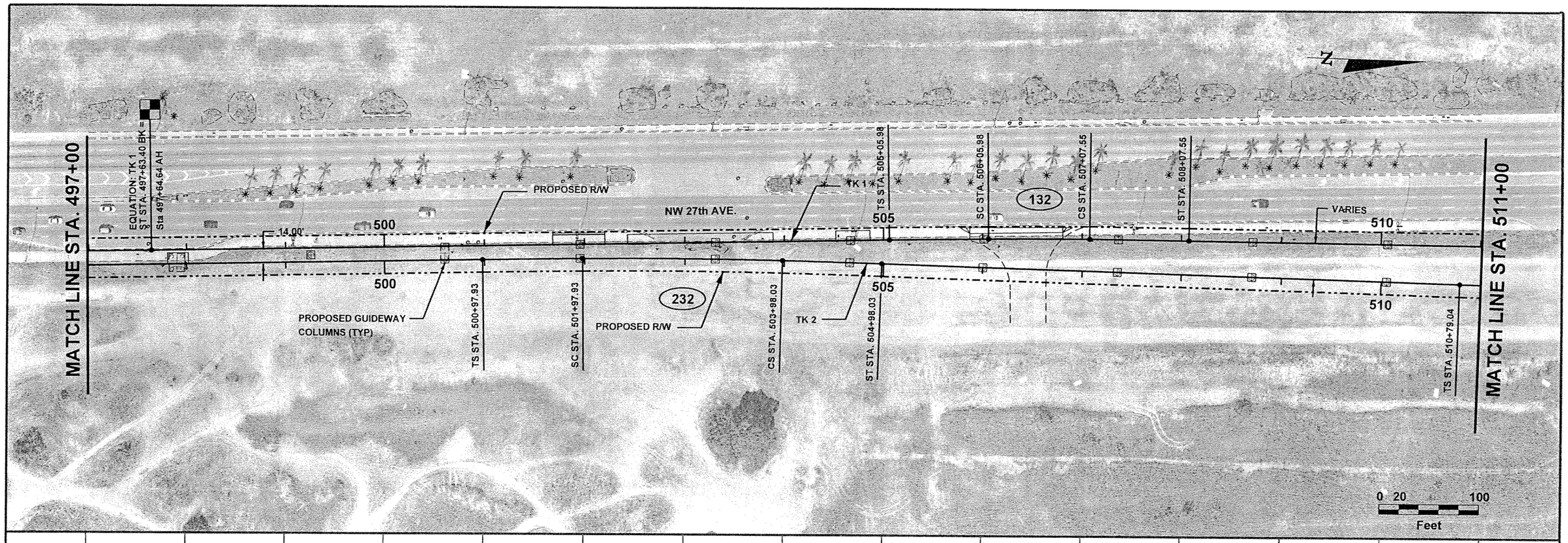

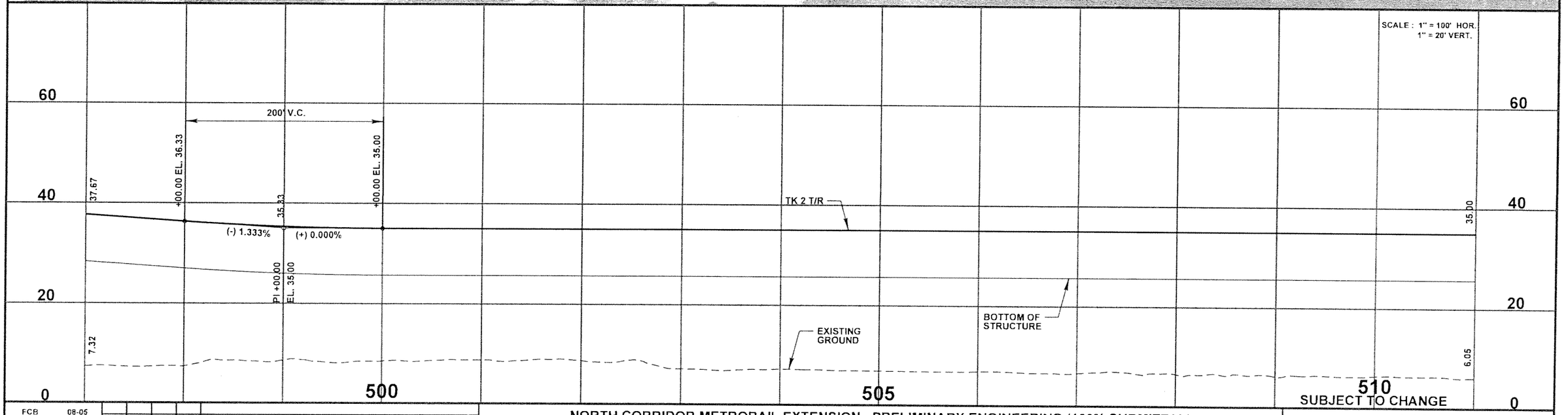

FCB	08-05				
Designed by	Date				
ACh	04-06				
Drawn by	Date				
JAE	05-06				
Checked by	Date				
Approved by	Date	No.	Date	By / Chk	App. Revisions

NORTH CORRIDOR METRORAIL EXTENSION - PRELIMINARY ENGINEERING (100% SUBMITTAL)

TRACK

MIAMI-DADE COUNTY

MIAMI-DADE TRANSIT

PARSONS
7600 CORPORATE CENTER DRIVE, SUITE 500
MIAMI, FLORIDA 33126
PHONE: (786) 464-1000 FAX: (786) 845-7119
CERTIFICATE OF AUTHORIZATION NO. 1838

Approved | Date | Approved | Date

PLAN AND PROFILE

Scale HOR: 1" = 100' | Drawing TK - 030 | Sheet 43

05/15/2006 10:56:15 AM s:\mdt_northtrack\mdt35.dgn

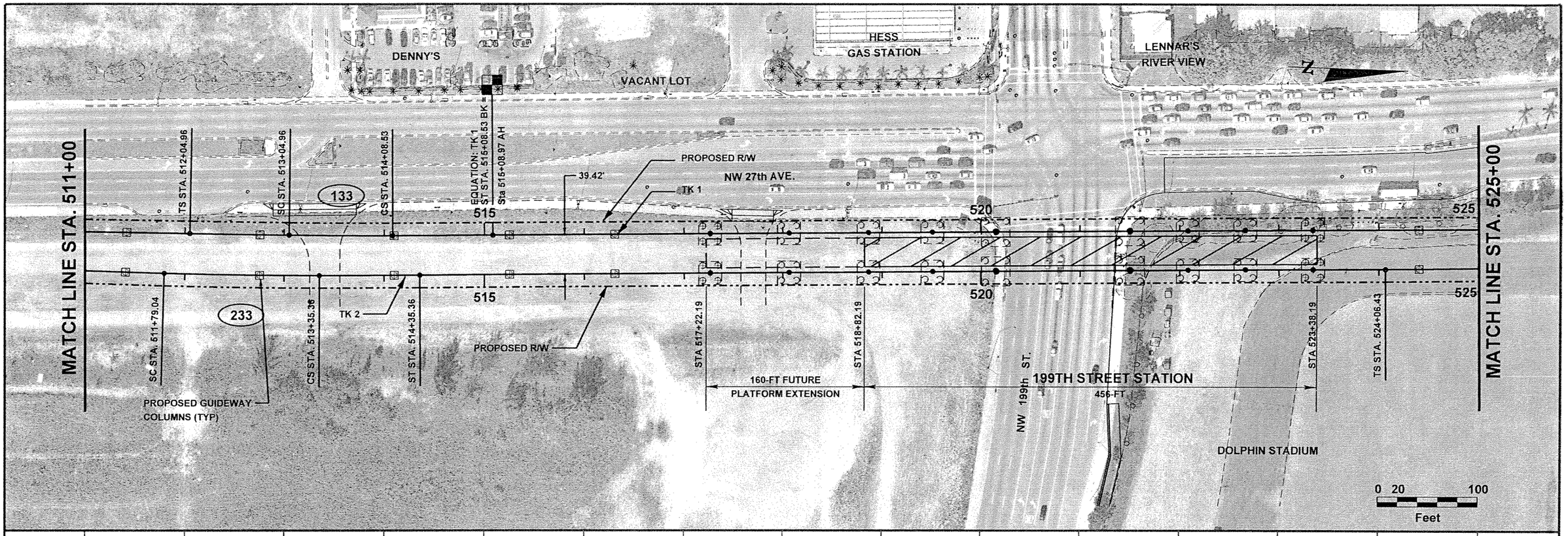

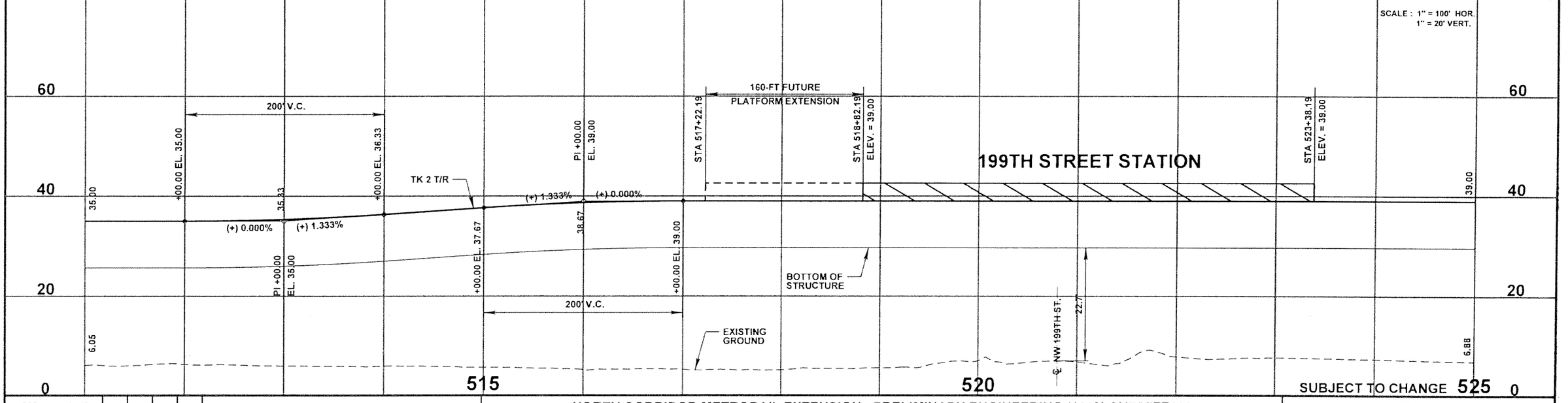

FCB	08-05						
Designed by	Date						
ACh	04-06						
Drawn by	Date						
JAE	05-06						
Checked by	Date						
Approved by	Date	No.	Date	By / Chk	App.	Revisions	

NORTH CORRIDOR METRORAIL EXTENSION - PRELIMINARY ENGINEERING (100% SUBMITTAL)

TRACK

MIAMI-DADE COUNTY

MIAMI-DADE TRANSIT

PARSONS
7600 CORPORATE CENTER DRIVE, SUITE 500
MIAMI, FLORIDA 33126
PHONE: (786) 464-1000 FAX: (786) 845-7119
CERTIFICATE OF AUTHORIZATION NO. 1838

Approved	Date	Approved	Date

PLAN AND PROFILE

Scale HOR: 1" = 100' | Drawing TK - 031 | Sheet 44

05/15/2006 10:56:51 AM s:\mdt_north\trackway\plpntk31.dgn

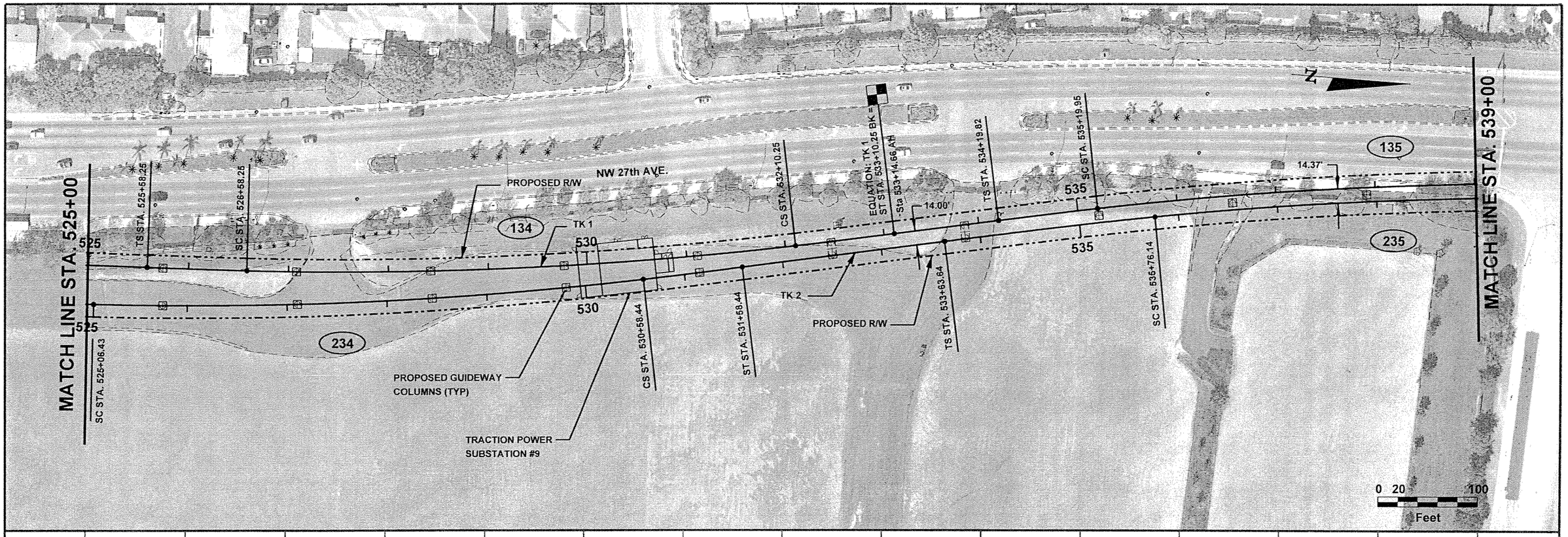

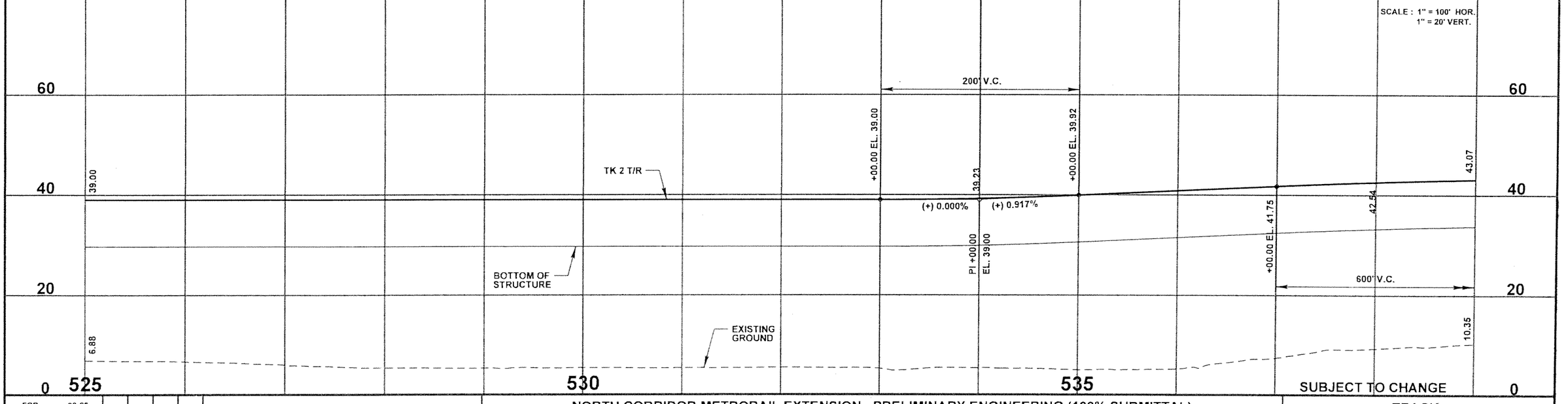

FCB	08-05						
Designed by	Date						
ACh	04-06						
Drawn by	Date						
JAE	05-06						
Checked by	Date						
Approved by	Date	No.	Date	By / Chk	App.	Revisions	

NORTH CORRIDOR METRORAIL EXTENSION - PREliminary ENGINEERING (100% SUBMITTAL)

TRACK

MIAMI-DADE COUNTY

MIAMI-DADE TRANSIT

PARSONS
7600 CORPORATE CENTER DRIVE, SUITE 500
MIAMI, FLORIDA 33126
PHONE: (786) 464-1000 FAX: (786) 845-7119
CERTIFICATE OF AUTHORIZATION NO. 1838

Approved | Date | Approved | Date

PLAN AND PROFILE

Scale HOR: 1" = 100' | Drawing TK - 032 | Sheet 45

05/15/2006 10:57:14 AM s:\mdt_northtrackway\plprtk32.dgn

FCB	08-05
Designed by	Date
ACh	04-06
Drawn by	Date
JAE	05-06
Checked by	Date
Approved by	Date

No.	Date	By / Chk.	App.	Revisions

NORTH CORRIDOR METRORAIL EXTENSION - PRELIMINARY ENGINEERING (100% SUBMITTAL)

TRACK

MIAMI-DADE COUNTY

MIAMI-DADE TRANSIT

PARSONS
7600 CORPORATE CENTER DRIVE, SUITE 500
MIAMI, FLORIDA 33126
PHONE: (786) 464-1000 FAX: (786) 845-7119
CERTIFICATE OF AUTHORIZATION NO. 1838

Approved | Date | Approved | Date

PLAN AND PROFILE

Scale HOR: 1" = 100' | Drawing TK - 033 | Sheet 46

05/15/2006 10:57:39 AM s:\mdt_north\trackway\plprtk33.dgn

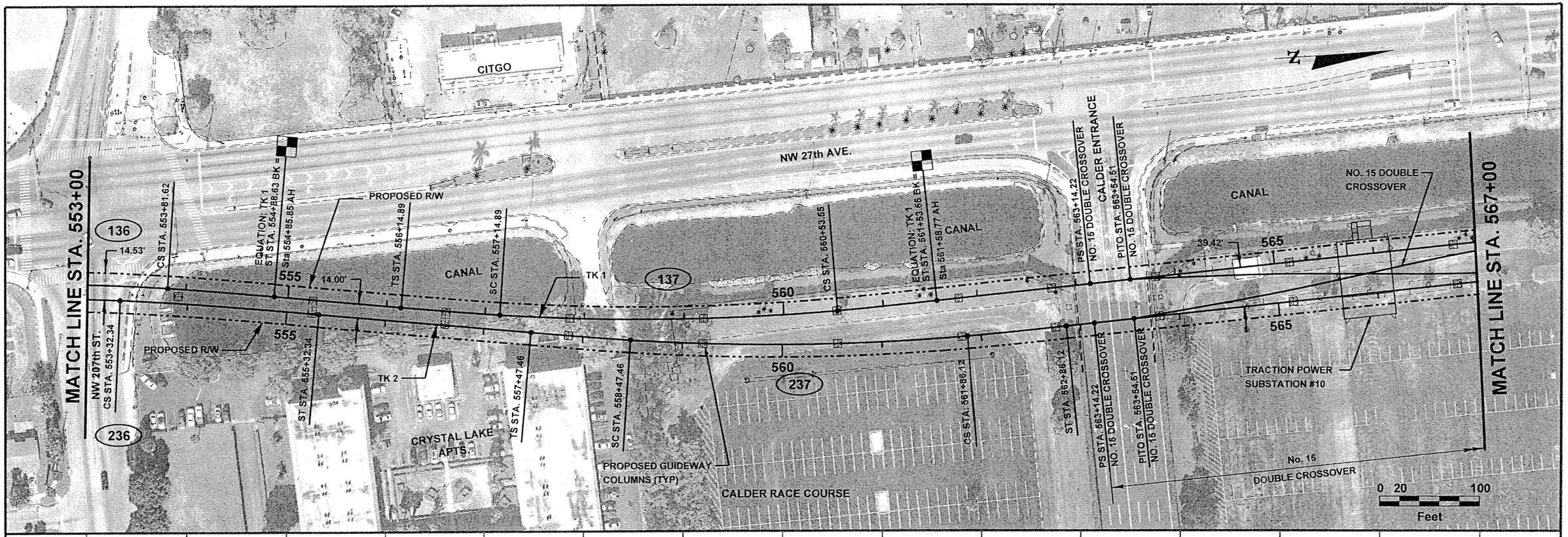

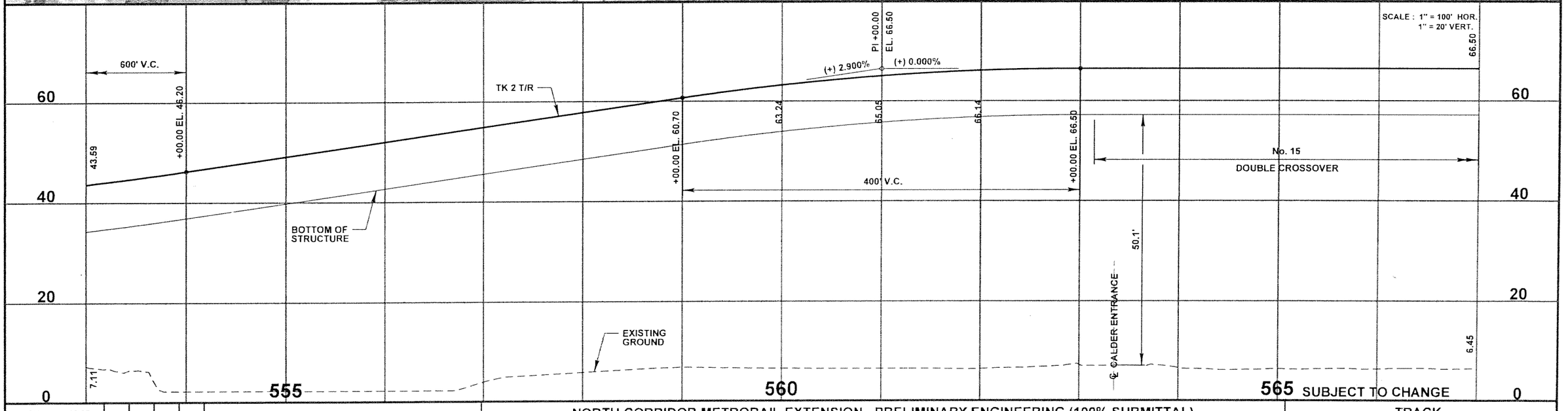

FCB	08-05						
Designed by	Date						
ACh	04-06						
Drawn by	Date						
JAE	05-06						
Checked by	Date						
Approved by	Date	No.	Date	By / Chk	App.	Revisions	

NORTH CORRIDOR METRORAIL EXTENSION - PRELIMINARY ENGINEERING (100% SUBMITTAL)

TRACK

MIAMI-DADE COUNTY

MIAMI-DADE TRANSIT

PARSONS
7600 CORPORATE CENTER DRIVE, SUITE 500
MIAMI, FLORIDA 33126
PHONE: (786) 464-1000 FAX: (786) 845-7119
CERTIFICATE OF AUTHORIZATION NO. 1838

Approved | Date

Approved | Date

PLAN AND PROFILE

Scale: HOR: 1" = 100' | Drawing: TK - 034 | Sheet: 47

05/15/2006 10:56:03 AM s:\mdt_north\trackway\plprtk34.dgn

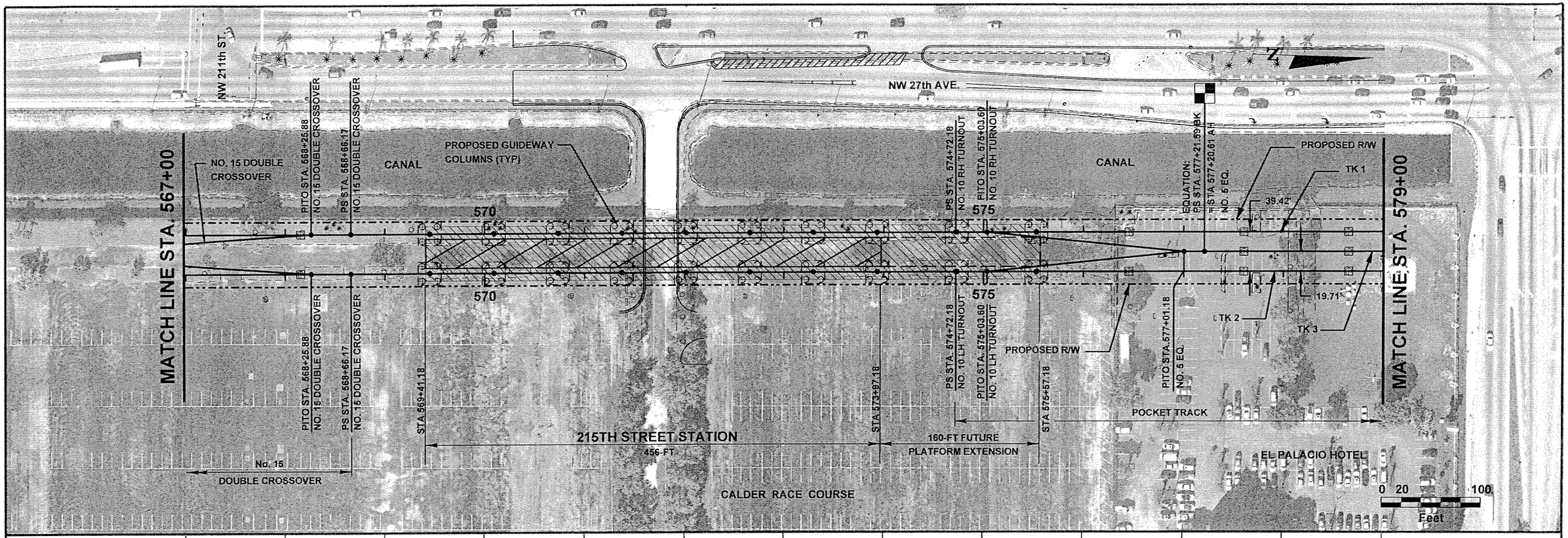

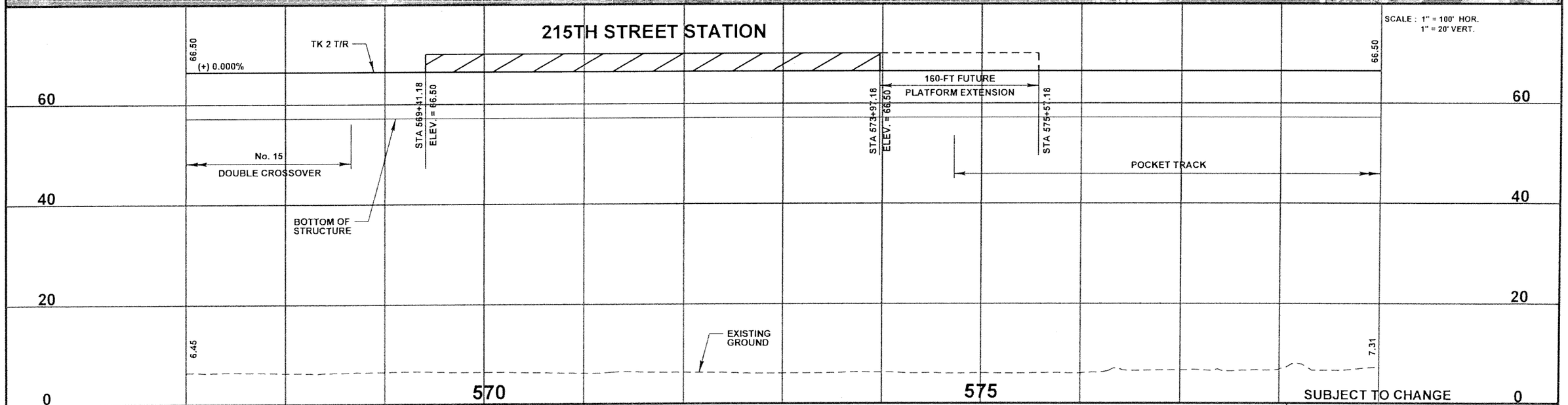

FCB	08-05					
Designed by	Date					
ACh	04-06					
Drawn by	Date					
JAE	05-06					
Checked by	Date					
Approved by	Date	No.	Date	By / Chk	App.	Revisions

NORTH CORRIDOR METRORAIL EXTENSION - PRELIMINARY ENGINEERING (100% SUBMITTAL)

TRACK

MIAMI-DADE COUNTY

MIAMI-DADE TRANSIT

PARSONS
7600 CORPORATE CENTER DRIVE, SUITE 500
MIAMI, FLORIDA 33126
PHONE: (786) 464-1000 FAX: (786) 845-7119
CERTIFICATE OF AUTHORIZATION NO. 1836

Approved | Date | Approved | Date

PLAN AND PROFILE

Scale HOR: 1" = 100' | Drawing TK - 035 | Sheet 48

05/15/2006 10:58:33 AM s:\mdt_north\trackway\plprtk35.dgn

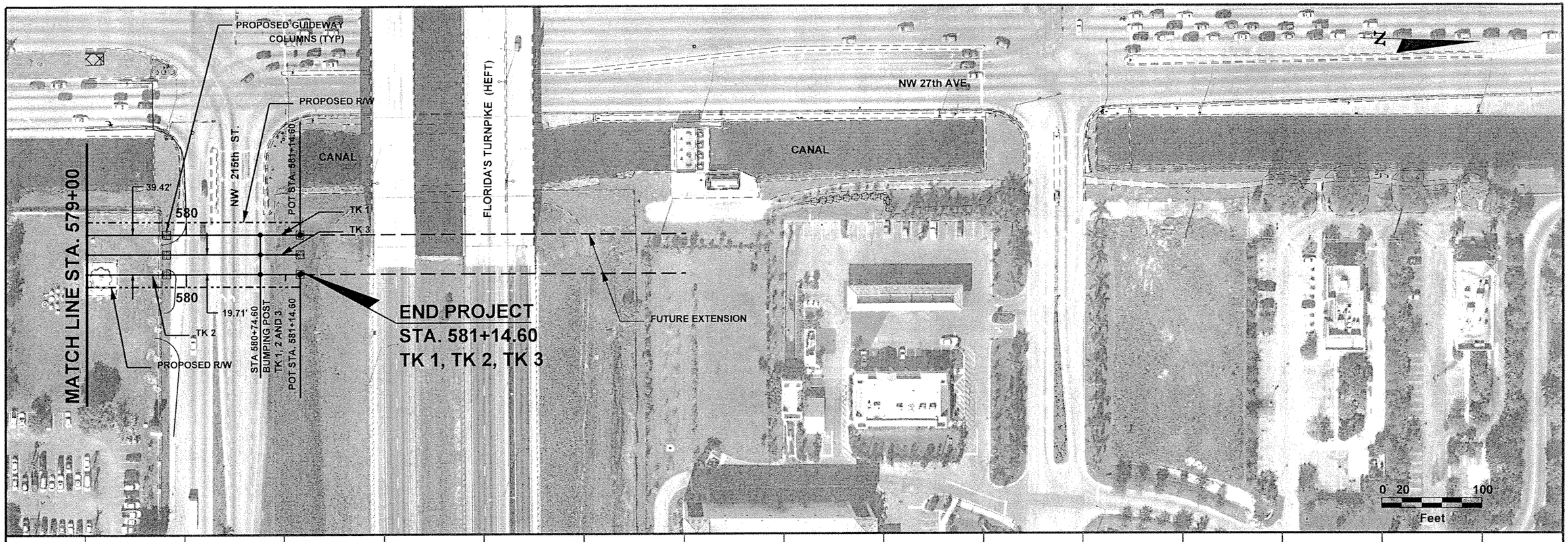

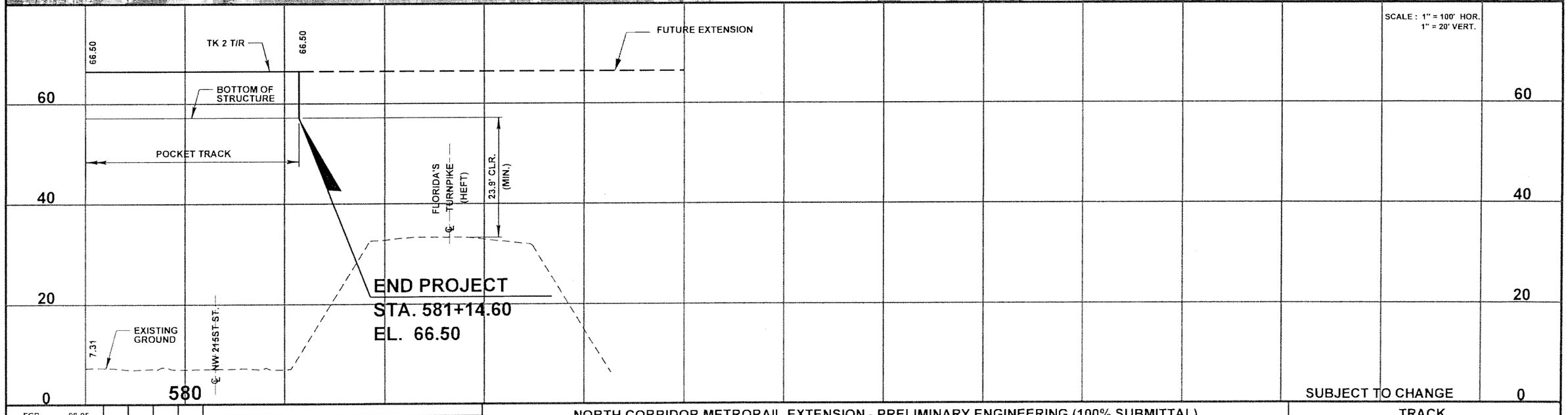

SCALE : 1" = 100' HOR.
1" = 20' VERT.

SUBJECT TO CHANGE

FCB	08-05						
Designed by	Date						
ACh	04-06						
Drawn by	Date						
JAE	05-06						
Checked by	Date						
Approved by	Date	No.	Date	By / Chk.	App.	Revisions	

NORTH CORRIDOR METRORAIL EXTENSION - PRELIMINARY ENGINEERING (100% SUBMITTAL)

MIAMI-DADE COUNTY

MIAMI-DADE TRANSIT

PARSONS
7600 CORPORATE CENTER DRIVE, SUITE 500
MIAMI, FLORIDA 33126
PHONE: (786) 464-1000 FAX: (786) 845-7119
CERTIFICATE OF AUTHORIZATION NO. 1838

Approved | Date | Approved | Date

TRACK

PLAN AND PROFILE

Scale HOR: 1" = 100' | Drawing TK - 036 | Sheet 49

05/15/2006 10:58:55 AM s:\mdt_north\trackway\plprtk36.dgn

NORTHBOUND TRACK

CURVE NO.	DESC.	BEARING (CHORD BEARING)	STATION	COORDINATES NORTHING	COORDINATES EASTING	DATA	EQUATION DATA TRACK	EQUATION DATA STATION
	POB/POT		103+37.72	548,826.6160	905,613.6390	MEET EXISTING TRACK		
		N 02° 05'01" W						
•15 T.O.	PS		104+77.47	548,966.2786	905,608.5577			
		N 02° 05'01" W						
	PITO		105+17.76	549,006.5437	905,607.0928			
		N 02° 05'01" W						
•10 TO	PS		132+08.89	551,695.8916	905,509.2475		•10 XO	132+08.89
		N 02° 05'01" W						
	PITO		132+40.31	551,727.2875	905,508.1052		•10 XO	132+40.31
		N 02° 05'01" W						
•10 TO	PITO		136+53.44	552,140.1520	905,493.0842		•10 XO	136+54.14
		N 02° 05'01" W						
	PS		136+84.86	552,171.5479	905,491.9419		•10 XO	136+85.56
		N 02° 05'01" W						
204	TS		137+14.27	552,200.9359	905,490.8727	I=5° 35'00" (LT) V=58 MPH Δ=4° 08'31" (LT) R=3975.000' L=287.35' D=1° 26'29" C=287.29' T=143.74' Ea=2.00" Eu=1.39"		
			Ls=100.000'					
	SC		138+14.27	552,300.8530	905,486.8179			
	CC	(N 04° 52'31" W)		552,106.3739	901,516.5782			
	PI			552,444.6100	905,482.0072			
	CS		141+01.62	552,587.1051	905,462.4017			
			Ls=100.000'					
	ST		142+01.62	552,686.2655	905,449.4759			
		N 07° 40'01" W						
205	TS		143+13.28	552,796.9226	905,434.5794	I=5° 33'18" (RT) V=58 MPH Δ=2° 28'50" (RT) R=3960.000' L=171.44' D=1° 26'49" C=171.42' T=85.73' Ea=1.75" Eu=1.66"		
			Ls=212.500'					
	SC		145+25.78	553,007.7613	905,408.1142			
	CC	(N 04° 53'22" W)		553,430.6073	909,345.4739			
	PI			553,092.6445	905,394.7698			
	CS		146+97.22	553,178.5609	905,393.5031			
			Ls=212.500'					
	ST		149+09.72	553,390.8312	905,383.7735			
		N 02° 06'43" W						
208	TS		204+83.38	558,960.7061	905,178.3731	I=23° 12'46" (LT) V=46 MPH Δ=17° 25'31" (LT) R=1980.000' L=602.18' D=2° 53'37" C=599.86' T=303.43' Ea=2.25" Eu=2.04"		
			Ls=200.000'					
	SC		206+83.38	559,160.3952	905,167.6405			
	CC	(N 13° 43'06" W)		558,987.6318	903,195.1920			
	PI			559,467.1934	905,159.6953			
	CS		212+85.55	559,743.1438	905,025.3837			
			Ls=200.000'					
	ST		214+85.55	559,925.3171	904,942.8986			
		N 25° 19'29" W						
209	TS		216+81.83	560,102.7345	904,858.9398	I=22° 47'14" (RT) V=58 MPH Δ=14° 41'05" (RT) R=1980.000' L=507.47' D=2° 53'37" C=506.08' T=255.13' Ea=3.25" Eu=3.56"		
			Ls=280.000'					
	SC		219+61.83	560,358.5212	904,745.1929			
	CC	(N 13° 55'52" W)		561,076.9080	906,590.2729			
	PI			560,590.2209	904,628.2479			
	CS		224+69.30	560,849.7144	904,623.3507			
			Ls=280.000'					
	ST		227+49.30	561,129.0079	904,604.3691			
		N 02° 32'16" W						

NORTHBOUND TRACK

CURVE NO.	DESC.	BEARING (CHORD BEARING)	STATION	COORDINATES NORTHING	COORDINATES EASTING	DATA	EQUATION DATA TRACK	EQUATION DATA STATION
210	TS		238+82.93	562,261.5232	904,554.1767	I=2° 00'00" (RT) V=70 MPH Δ=1° 09'04" (RT) R=6750.000' L=135.62' D=0° 50'56" C=135.62' T=67.81' Ea=1.75" Eu=1.16"		
			Ls=100.000'					
	SC		239+82.93	562,361.4355	904,549.9958			
	CC	(N 01° 32'16" W)		562,610.3396	911,295.4051			
	PI			562,429.1813	904,546.7462			
	CS		241+18.55	562,497.0038	904,546.3567			
			Ls=100.000'					
	ST		242+18.55	562,596.9965	904,545.1714			
		N 00° 32'16" W						
211	TS		243+19.87	562,698.3158	904,544.2206	I=2° 00'00" (LT) V=70 MPH Δ=1° 09'04" (LT) R=6750.000' L=135.62' D=0° 50'56" C=135.62' T=67.81' Ea=1.75" Eu=1.16"		
			Ls=100.000'					
	SC		244+19.87	562,798.3086	904,543.0353			
	CC	(N 01° 32'16" W)		562,684.9728	897,793.9869			
	PI			562,866.1311	904,542.6458			
	CS		245+55.49	562,933.8768	904,539.3962			
			Ls=100.000'					
	ST		246+55.49	563,033.7891	904,535.2153			
		N 02° 32'16" W						
212	TS		254+53.03	563,830.5505	904,499.9033	I=13° 12'04" (LT) V=46 MPH Δ=5° 33'42" (LT) R=1500.000' L=145.60' D=3° 49'11" C=145.55' T=72.86' Ea=2.75" Eu=2.91"		
			Ls=200.000'					
	SC		256+53.03	564,030.0689	904,486.6133			
	CC	(N 09° 08'17" W)		563,863.9745	902,995.8375			
	PI			564,103.9654	904,487.7857			
	CS		257+98.64	564,173.7666	904,463.4985			
			Ls=200.000'					
	ST		259+98.64	564,367.3880	904,413.5490			
		N 15° 44'19" W						
213	TS		264+83.13	564,833.7177	904,282.1298	I=13° 28'30" (RT) V=46 MPH Δ=3° 39'10" (RT) R=1575.000' L=100.41' D=3° 38'16" C=100.39' T=50.22' Ea=2.75" Eu=2.64"		
			Ls=270.000'					
	SC		267+53.13	565,095.4956	904,216.3672			
	CC	(N 09° 00'04" W)		565,391.3669	905,763.3272			
	PI			565,142.9317	904,194.9884			
	CS		268+53.54	565,194.6527	904,200.6600			
			Ls=270.000'					
	ST		271+23.54	565,463.9393	904,182.2986			
		N 02° 15'50" W						
214	TS		274+35.05	565,775.2094	904,169.9937	I=32° 37'10" (RT) V=46 MPH Δ=22° 18'22" (RT) R=1500.000' L=583.97' D=3° 49'11" C=580.29' T=295.73' Ea=2.75" Eu=2.91"		
			Ls=270.000'					
	SC		277+05.05	566,045.1000	904,167.4262			
	CC	(N 14° 02'45" E)		565,969.3981	905,665.5148			
	PI			566,349.2233	904,147.3022			
	CS		282+89.03	566,608.0430	904,308.2628			
			Ls=270.000'					
	ST		285+59.03	566,844.9299	904,437.6155			
		N 30° 21'20" E						

FCB Designed by	08-05 Date					
JLB Drawn by	09-05 Date					
JAE Checked by	05-06 Date					
Approved by	Date	No.	Date	By / Chk	App.	Revisions

NORTH CORRIDOR METRORAIL EXTENSION - PRELIMINARY ENGINEERING (100% SUBMITTAL)

MIAMI-DADE COUNTY

MIAMI-DADE TRANSIT

PARSONS
7600 CORPORATE CENTER DRIVE, SUITE 500
MIAMI, FLORIDA 33126
PHONE: (786) 454-1000 FAX: (786) 845-7119
CERTIFICATE OF AUTHORIZATION NO. 1838

Approved | Date | Approved | Date

SUBJECT TO CHANGE

CURVE DATA AND COORDINATES

NORTHBOUND TRACK DATA

SHEET 1 OF 4

Scale NONE | Drawing TK-101 | Sheet

NORTHBOUND TRACK

CURVE NO.	DESC.	BEARING (CHORD BEARING)	STATION	COORDINATES NORTHING	COORDINATES EASTING	DATA	EQUATION DATA TRACK	EQUATION DATA STATION
	TS		289+24.85	567,160.5994	904,622.4890			
			Ls=250.000'			I=32° 43'27" (LT)		
	SC		291+74.85	567,379.1453	904,743.7775	V=58 MPH		
						Δ=24° 45'59" (LT)		
215	CC	(N 13° 59'37" E)		568,178.8337	903,131.1714	R=1800.000'		
	PI			567,724.8343	904,952.9362	L=788.06'		
						D=3° 10'59"		
	CS		299+52.91	568,128.2486	904,930.4604	C=772.01'		
			Ls=250.000'			T=395.20'		
	ST		302+02.91	568,378.1537	904,925.9140	Ea=4.00"		
						Eu=3.50"		
		N 02° 22'07" W						
	TS		309+95.45	569,170.0170	904,893.1614			
			Ls=100.000'			I=3° 35'00" (RT)		
	SC		310+95.45	569,269.9421	904,889.2974	V=70 MPH		
						Δ=2° 39'33" (RT)		
216	CC	(N 00° 34'37" W)		569,476.1990	911,085.8656	R=6200.000'		
	PI			569,413.7508	904,883.0802	L=287.75'		
						D=0° 55'27"		
	CS		313+83.20	569,557.6556	904,886.4007	C=287.73'		
			Ls=100.000'			T=143.90'		
	ST		314+83.20	569,657.6382	904,888.2521	Ea=2.00"		
						Eu=1.17"		
		N 01° 12'53" E						
	TS		315+95.60	569,770.0055	904,890.6350			
			Ls=100.000'			I=3° 35'00" (LT)		
	SC		316+95.60	569,869.9880	904,892.4864	V=70 MPH		
						Δ=2° 39'33" (LT)		
217	CC	(N 00° 34'37" W)		569,951.4447	898,693.0215	R=6200.000'		
	PI			570,013.8924	904,895.8069	L=287.75'		
						D=0° 55'27"		
	CS		319+83.35	570,157.7008	904,889.5898	C=287.73'		
			Ls=100.000'			T=143.90'		
	ST		320+83.35	570,257.6258	904,885.7258	Ea=2.00"		
						Eu=1.17"		
		N 02° 22'07" W						
•10	PS		323+83.14	570,557.1631	904,873.3365		PKT TK	323+83.14
TO		N 02° 22'07" W						
	PITO		324+14.56	570,588.5529	904,872.0382		PKT TK	324+14.56
		N 02° 22'07" W						
•10	PITO		335+48.58	571,721.6098	904,825.1735		PKT TK	335+49.57
TO		N 02° 22'07" W						
	PS		335+80.00	571,752.9996	904,823.8752		PKT TK	335+80.99
		N 02° 22'07" W						
	TS		343+41.32	572,513.6679	904,792.4129			
			Ls=100.000'			I=5° 10'00" (LT)		
	SC		344+41.32	572,613.5469	904,787.5404	V=46 MPH		
						Δ=2° 37'13" (LT)		
218	CC	(N 04° 57'07" W)		572,470.6333	902,542.0838	R=2250.000'		
	PI			572,665.0630	904,786.1510	L=102.90'		
						D=2° 32'47"		
	CS		345+44.22	572,716.0503	904,778.6594	C=102.89'		
			Ls=100.000'			T=51.46'		
	ST		346+44.22	572,815.2790	904,766.2808	Ea=2.00"		
						Eu=1.77"		
		N 07° 32'07" W						
	TS		347+56.66	572,926.7542	904,751.5352			
			Ls=100.000'			I=5° 10'00" (RT)		
	SC		348+56.66	573,025.9829	904,739.1566	V=46 MPH		
						Δ=2° 37'13" (RT)		
219	CC	(N 04° 57'07" W)		573,271.3999	906,975.7322	R=2250.000'		
	PI			573,076.9700	904,731.6650	L=102.90'		
						D=2° 32'47"		
	CS		349+59.56	573,128.4858	904,730.2756	C=102.89'		
			Ls=100.000'			T=51.46'		
	ST		350+59.56	573,228.3649	904,725.4031	Ea=2.00"		
						Eu=1.77"		
		N 02° 22'07" W						

NORTHBOUND TRACK

CURVE NO.	DESC.	BEARING (CHORD BEARING)	STATION	COORDINATES NORTHING	COORDINATES EASTING	DATA	EQUATION DATA TRACK	EQUATION DATA STATION
	TS		362+85.25	574,453.0081	904,674.7500			
			Ls=100.000'			I=7° 39'03" (LT)		
	SC		363+85.25	574,552.9037	904,670.1985	V=58 MPH		
						Δ=6° 12'34" (LT)		
220	CC	(N 06° 11'38" W)		574,338.6892	900,700.9748	R=3975.000'		
	PI			574,768.5325	904,661.6994	L=430.78'		
						D=1° 26'29"		
	CS		368+16.03	574,980.9644	904,623.7426	C=430.57'		
			Ls=100.000'			T=215.60'		
	ST		369+16.03	575,079.5107	904,606.7579	Ea=2.00"		
						Eu=1.39"		
		N 10° 01'09" W						
	TS		371+90.66	575,349.9470	904,558.9791			
			Ls=220.000'			I=8° 24'19" (RT)		
	SC		374+10.66	575,566.9295	904,522.7125	V=58 MPH		
						Δ=5° 13'20" (RT)		
221	CC	(N 05° 49'00" W)		576,147.3115	908,439.9509	R=3960.000'		
	PI			575,744.8501	904,489.2102	L=360.92'		
						D=1° 26'49"		
	CS		377+71.58	575,925.8715	904,486.1471	C=360.80'		
			Ls=220.000'			T=180.59'		
	ST		379+91.58	576,145.7098	904,477.9148	Ea=1.75"		
						Eu=1.66"		
		N 01° 36'51" W						
	TS		387+20.44	576,874.2790	904,457.3851			
			Ls=100.000'			I=1° 40'00" (LT)		
	SC		388+20.44	576,974.2321	904,454.3304	V=70 MPH		
						Δ=0° 50'53" (LT)		
222	CC	(N 02° 26'50" W)		576,727.0891	897,458.6946	R=7000.000'		
	PI			577,026.0320	904,453.1090	L=103.61'		
						D=0° 49'07"		
	CS		389+24.05	577,077.7472	904,449.9062	C=103.61'		
			Ls=100.000'			T=51.80'		
	ST		390+24.05	577,177.5964	904,444.4213	Ea=1.75"		
						Eu=1.06"		
		N 03° 16'50" W						
	TS		391+33.01	577,286.3797	904,438.1857			
			Ls=100.000'			I=1° 40'00" (RT)		
	SC		392+33.01	577,386.2290	904,432.7008	V=70 MPH		
						Δ=0° 50'53" (RT)		
223	CC	(N 02° 26'50" W)		577,736.8870	911,423.9124	R=7000.000'		
	PI			577,437.9440	904,429.4980	L=103.61'		
						D=0° 49'07"		
	CS		393+36.62	577,489.7437	904,428.2766	C=103.61'		
			Ls=100.000'			T=51.80'		
	ST		394+36.62	577,589.6968	904,425.2219	Ea=1.75"		
						Eu=1.06"		
		N 01° 36'51" W						
	TS		404+66.13	578,618.7943	904,396.2239			
			Ls=100.000'			I=4° 17'02" (RT)		
	SC		405+66.13	578,718.7686	904,394.0243	V=46 MPH		
						Δ=2° 09'42" (RT)		
224	CC	(N 00° 31'40" E)		578,744.8290	907,093.8985	R=2700.000'		
	PI			578,769.7220	904,391.9710	L=101.87'		
						D=2° 07'19"		
	CS		406+68.00	578,820.6290	904,394.9627	C=101.86'		
			Ls=100.000'			T=50.94'		
	ST		407+68.00	578,920.5457	904,399.0039	Ea=1.50"		
						Eu=1.64"		
		N 02° 40'11" E						

SUBJECT TO CHANGE

CURVE DATA AND COORDINATES

FCB Designed by	08-05 Date						
JLB Drawn by	09-05 Date						
JAE Checked by	05-06 Date						
Approved by	Date	No.	Date	By / Chk	App.	Revisions	

NORTH CORRIDOR METRORAIL EXTENSION - PRELIMINARY ENGINEERING (100% SUBMITTAL)

MIAMI-DADE COUNTY

MIAMI-DADE TRANSIT

PARSONS
7600 CORPORATE CENTER DRIVE, SUITE 500
MIAMI, FLORIDA 33126
PHONE: (786) 464-1000 FAX: (786) 845-7119
CERTIFICATE OF AUTHORIZATION NO. 1838

Approved | Date | Approved | Date

NORTHBOUND TRACK DATA

SHEET 2 OF 4

Scale NONE | Drawing TK-102 | Sheet 2

NORTHBOUND TRACK

CURVE NO.	DESC.	BEARING (CHORD BEARING)	STATION	COORDINATES NORTHING	COORDINATES EASTING	DATA	EQUATION DATA TRACK	EQUATION DATA STATION
	TS		409+43.76	579,096.1147	904,407.1907			
			Ls=100.000'			I=5° 34'15" (LT)		
	SC		410+43.76	579,196.0341	904,411.1548	V=46 MPH		
						Δ=3° 11'01" (LT)		
225	CC	(N 00° 06'56" W)		579,257.8584	902,011.9512	R=2400.000'		
	PI			579,262.7090	904,414.9590	L=133.35'		
						D=2° 23'14"		
	CS		411+77.11	579,329.3680	904,410.8856	C=133.33'		
			Ls=100.000'			T=66.69'		
	ST		412+77.11	579,429.2706	904,406.5182	Ea=2.00"		
						Eu=1.54"		
		N 02° 54'04" W						
	PS		441+42.25	582,290.7387	904,261.5084		•10 XO	441+42.25
•10 TO		N 02° 54'04" W						
	PITO		441+73.67	582,322.1151	904,259.9183		•10 XO	441+73.67
		N 02° 54'04" W						
•10	PITO		445+86.80	582,734.7233	904,239.0087		•10 XO	445+87.50
TO		N 02° 54'04" W						
	PS		446+18.22	582,766.0997	904,237.4186		•10 XO	446+18.92
		N 02° 54'04" W						
	TS		451+63.86	583,311.0443	904,209.8026			
			Ls=100.000'			I=1° 38'49" (LT)		
	SC		452+63.86	583,410.9075	904,204.5750	V=70 MPH		
						Δ=1° 04'26" (LT)		
226	CC	(N 03° 43'28" W)		582,854.8603	894,220.0464	R=10,000.000'		
	PI			583,504.5180	904,199.9980	L=187.42'		
						D=0° 34'23"		
	CS		454+51.29	583,597.9319	904,192.4004	C=187.42'		
			Ls=100.000'			T=93.71'		
	ST		455+51.29	583,697.6300	904,184.6373	Ea=1.00"		
						Eu=0.97"		
		N 04° 32'52" W						
	TS		456+77.75	583,823.6958	904,174.6097			
			Ls=100.000'			I=1° 30'00" (RT)		
	SC		457+77.75	583,923.3940	904,166.8466	V=70 MPH		
						Δ=0° 55'37" (RT)		
227	CC	(N 03° 47'52" W)		584,666.4656	914,139.2006	R=10,000.000'		
	PI			584,004.0350	904,160.2650	L=161.80'		
						D=0° 34'23"		
	CS		459+39.55	584,084.8384	904,156.1295	C=161.80'		
			Ls=100.000'			T=80.90'		
	ST		460+39.55	584,184.6879	904,150.6460	Ea=1.00"		
						Eu=0.97"		
		N 03° 02'52" W						
	TS		469+28.74	585,072.6155	904,103.3676			
			Ls=100.000'			I=7° 31'06" (RT)		
	SC		470+28.74	585,172.5085	904,098.7905	V=46 MPH		
						Δ=4° 58'19" (RT)		
228	CC	(N 00° 42'41" E)		585,242.1874	906,347.7113	R=2250.000'		
	PI			585,270.1820	904,092.8480	L=195.25'		
						D=2° 32'47"		
	CS		472+23.98	585,367.6779	904,101.2135	C=195.18'		
			Ls=100.000'			T=97.68'		
	ST		473+23.98	585,467.4264	904,108.2693	Ea=2.00"		
						Eu=1.77"		
		N 04° 28'14" E						
	TS		474+50.13	585,593.1885	904,118.1018			
			Ls=100.000'			I=6° 53'02" (LT)		
	SC		475+50.13	585,692.9371	904,125.1575	V=46 MPH		
						Δ=4° 20'15" (LT)		
229	CC	(N 01° 01'43" E)		585,818.4276	901,878.6597	R=2250.000'		
	PI			585,777.9620	904,132.5480	L=170.33'		
						D=2° 32'47"		
	CS		477+20.46	585,863.1974	904,128.2143	C=170.29'		
			Ls=100.000'			T=85.20'		
	ST		478+20.46	585,963.1349	904,124.7437	Ea=2.00"		
						Eu=1.77"		
		N 02° 24'48" W						

NORTHBOUND TRACK

CURVE NO.	DESC.	BEARING (CHORD BEARING)	STATION	COORDINATES NORTHING	COORDINATES EASTING	DATA	EQUATION DATA TRACK	EQUATION DATA STATION
	TS		481+72.34	586,314.7073	904,109.9263			
			Ls=245.000'			I=4° 37'48" (RT)		
	SC		484+17.34	586,559.5484	904,101.2221	V=70 MPH		
						Δ=2° 21'57" (RT)		
230	CC	(N 00° 05'54" W)		586,698.1883	910,299.6719	R=6200.000'		
	PI			586,687.5375	904,094.2129	L=256.02'		
						D=0° 55'27"		
	CS		486+73.36	586,815.5499	904,100.7827	C=256.00'		
			Ls=245.000'			T=128.03'		
	ST		489+18.36	587,060.4194	904,108.6464	Ea=2.00"		
						Eu=1.17"		
		N 02° 13'00" E						
	TS		490+51.83	587,193.7892	904,113.8088			
			Ls=100.000'			I=4° 59'24" (LT)		
	SC		491+51.83	587,293.7241	904,117.4087	V=70 MPH		
						Δ=4° 04'05" (LT)		
231	CC	(N 00° 16'42" W)		587,484.1433	897,905.3265	R=6215.000'		
	PI			587,514.3601	904,126.2174	L=441.27'		
						D=0° 55'19"		
	CS		495+93.11	587,734.9001	904,115.2658	C=441.18'		
			Ls=100.000'			T=220.73'		
	ST		496+93.11	587,834.7953	904,110.6952	Ea=2.00"		
						Eu=1.16"		
		N 02° 46'24" W						
	TS		500+97.93	588,239.1413	904,091.1084			
			Ls=100.000'			I=2° 46'24" (RT)		
	SC		501+97.93	588,339.0365	904,086.5385	V=70 MPH		
						Δ=1° 50'57" (RT)		
232	CC	(N 01° 23'12" W)		588,589.0676	910,281.4949	R=6200.000'		
	PI			588,438.9872	904,081.4277	L=200.10'		
						D=0° 55'27"		
	CS		503+98.03	588,539.0681	904,081.6965	C=200.09'		
			Ls=100.000'			T=100.06'		
	ST		504+98.03	588,639.0674	904,081.4277	Ea=2.00"		
						Eu=1.17"		
		DUE NORTH						
	TS		510+79.04	589,220.0831	904,081.4277			
			Ls=100.000'			I=2° 22'07" (LT)		
	SC		511+79.04	589,320.0825	904,081.1588	V=70 MPH		
						Δ=1° 26'40" (LT)		
233	CC	(N 01° 11'04" W)		589,270.0830	897,881.3605	R=6200.000'		
	PI			589,398.2618	904,081.4277	L=156.32'		
						D=0° 55'27"		
	CS		513+35.36	589,476.3633	904,077.9279	C=156.31'		
			Ls=100.000'			T=78.16'		
	ST		514+35.36	589,576.2883	904,074.0636	Ea=2.00"		
						Eu=1.17"		
		N 02° 22'07" W						
	TS		524+06.43	590,546.5297	904,033.9293			
			Ls=100.000'			I=9° 26'01" (LT)		
	SC		525+06.43	590,646.4253	904,029.3758	V=58 MPH		
						Δ=7° 59'12" (LT)		
234	CC	(N 07° 05'08" W)		590,432.8160	900,075.1413	R=3960.000'		
	PI			590,922.9579	904,018.3582	L=552.01'		
						D=1° 26'49"		
	CS		530+58.44	591,193.7728	903,961.3405	C=551.56'		
			Ls=100.000'			T=276.45'		
	ST		531+58.44	591,291.7432	903,941.2992	Ea=2.00"		
						Eu=1.41"		
		N 11° 48'08" W						

FCB	08-05						
Designed by	Date						
JLB	09-05						
Drawn by	Date						
JAE	05-06						
Checked by	Date						
Approved by	Date	No.	Date	By / Chk.	App.	Revisions	

NORTH CORRIDOR METRORAIL EXTENSION - PRELIMINARY ENGINEERING (100% SUBMITTAL)

MIAMI-DADE COUNTY

MIAMI-DADE TRANSIT

PARSONS
7500 CORPORATE CENTER DRIVE, SUITE 500
MIAMI, FLORIDA 33126
PHONE: (786) 464-1000 FAX: (786) 845-7119
CERTIFICATE OF AUTHORIZATION NO. 1838

Approved | Date | Approved | Date

SUBJECT TO CHANGE

CURVE DATA AND COORDINATES

NORTHBOUND TRACK DATA

SHEET 3 OF 4

Scale: NONE | Drawing: TK-103 | Sheet

NORTHBOUND TRACK

CURVE NO.	DESC.	BEARING (CHORD BEARING)	STATION	COORDINATES NORTHING	COORDINATES EASTING	DATA	EQUATION DATA TRACK	EQUATION DATA STATION
	TS		533+63.64	591,492.6034	903,899.3288	I=10° 00'00" (RT) V=70 MPH Δ=6° 55'32" (RT) R=3960.000' L=478.65' D=1° 26'49" C=478.36' T=239.62' Ea=2.50" Eu=2.46"		
			Ls=212.500'					
	SC		535+76.14	591,700.9846	903,857.7282			
235	CC	(N 06° 48'08" W)		592,406.6648	907,754.3441			
	PI			591,935.7760	903,806.7263			
	CS		540+54.79	592,175.9763	903,801.0692			
			Ls=212.500'					
	ST		542+67.29	592,388.2962	903,792.4867			
		N 01° 48'08" W						
	TS		549+00.37	593,021.0711	903,772.5750	I=11° 00'00" (RT) V=46 MPH Δ=5° 54'25" (RT) R=2250.000' L=231.97' D=2° 32'47" C=231.87' T=116.09' Ea=2.00" Eu=1.77"		
			Ls=200.000'					
	SC		551+00.37	593,221.0258	903,769.2470			
236	CC	(N 03° 41'52" E)		593,191.8045	906,019.0573			
	PI			593,337.6295	903,762.6138			
	CS		553+32.34	593,452.4094	903,784.2004			
			Ls=200.000'					
	ST		555+32.34	593,650.2725	903,813.2378			
		N 09° 11'52" E						
	TS		557+47.46	593,862.6185	903,847.6214	I=11° 10'14" (LT) V=46 MPH Δ=8° 37'26" (LT) R=2250.000' L=338.66' D=2° 32'47" C=338.34' T=169.65' Ea=2.00" Eu=1.77"		
			Ls=100.000'					
	SC		558+47.46	593,961.4463	903,862.8735			
237	CC	(N 03° 36'45" E)		594,271.6462	901,634.3592			
	PI			594,129.1924	903,890.7858			
	CS		561+86.12	594,299.1169	903,884.1915			
			Ls=100.000'					
	ST		562+86.12	594,399.0782	903,881.4895			
		N 01° 58'22" W						
•15 TO	PS		563+14.22	594,427.1640	903,880.5221		•15 DXO	563+14.22
		N 01° 58'22" W						
	PITO		563+54.51	594,467.4318	903,879.1350		•15 DXO	563+54.51
		N 01° 58'22" W						
•15 TO	PITO		568+25.88	594,938.5240	903,862.9081		•15 DXO	568+27.60
		N 01° 58'22" W						
	PS		568+66.17	594,978.7918	903,861.5210		•15 DXO	568+67.89
		N 01° 58'22" W						
•10 TO	PS		574+72.18	595,583.0807	903,801.2660		PTK TK	574+72.18
		N 01° 58'22" W						
	PITO		575+03.60	595,614.4788	903,800.1845		PTK TK	575+03.60
		N 01° 58'22" W						
	POE/POT		581+14.60	596,226.4723	903,818.5442			

SUBJECT TO CHANGE

FCB Designed by 08-05 Date
JLB Drawn by 09-05 Date
JAE Checked by 05-06 Date
Approved by Date

No.	Date	By / Chk	App.	Revisions

NORTH CORRIDOR METRORAIL EXTENSION - PRELIMINARY ENGINEERING (100% SUBMITTAL)

CURVE DATA AND COORDINATES

MIAMI-DADE COUNTY

MIAMI-DADE TRANSIT

PARSONS
7600 CORPORATE CENTER DRIVE, SUITE 500
MIAMI, FLORIDA 33126
PHONE: (786) 464-1000 FAX: (786) 845-7119
CERTIFICATE OF AUTHORIZATION NO. 1838

Approved Date Approved Date

NORTHBOUND TRACK DATA

SHEET 4 OF 4

Scale NONE | Drawing TK-104 | Sheet 53

SOUTHBOUND TRACK

CURVE NO.	DESC.	BEARING (CHORD BEARING)	STATION	COORDINATES NORTHING	COORDINATES EASTING	DATA	EQUATION DATA TRACK	EQUATION DATA STATION
•15 T.O.	POB/PS		448•69.00	546,494.5063	905,698.3508	MEET EXISTING TRACK	EX TK	448•69.00
		N 02° 44' 39" W						
	PITO		449•09.29	546,534.7518	905,696.4218		EX TK	449•09.29
		N 06° 33' 45" W						
101	TS		453•96.57	547,018.8417	905,640.7322	I•4° 21'03" (RT) V•46 MPH Δ•2° 17'24" (RT) R•2780.000' L•111.11' D•2° 03'40" C•111.10' T•55.56' Eq=1.50" Eu=1.55"		
			Ls•100.000'					
	SC		454•96.57	547,118.2518	905,629.8995			
	CC	(N 04° 23'13 W)		547,386.2461	908,396.9519			
	PI			547,173.4313	905,622.9482			
	CS		456•07.68	547,229.0254	905,621.4012			
			Ls•100.000'					
	ST		457•07.68	547,328.9245	905,616.9434			
		N 02° 12'42" W						
	POT EQN		464•51.95 BK •95•85.16 AH	548,072.6419	905,588.2225			
		N 02° 12'42" W						
102	TS		112•06.87	549,693.1393	905,525.6422	I•4° 57'06" (RT) V•58 MPH Δ•2° 03'29" (RT) R•2970.000' L•106.68' D•1° 55'45" C•106.68' T•53.35' Eq=3.00" Eu=1.54"		
			Ls•150.000'					
	SC		113•56.87	549,843.0667	905,521.1158			
	CC	(N 00° 15'52" E)		549,882.7039	908,490.8513			
	PI			549,896.4201	905,517.7919			
	CS		114•63.55	549,949.7405	905,521.6079			
			Ls•150.000'					
	ST		116•13.55	550,099.6198	905,527.5175			
		N 02° 44'25" E						
103	TS		117•20.01	550,205.9544	905,532.6069	I•4° 49'26" (LT) V•58 MPH Δ•1° 55'48" (LT) R•2970.000' L•100.05' D•1° 55'45" C•100.05' T•50.03' Eq=3.00" Eu=1.54"		
			Ls•150.000'					
	SC		118•70.01	550,355.8336	905,538.5164			
	CC	(N 00° 19'42" E)		550,422.8702	902,569.2731			
	PI			550,405.8365	905,542.1737			
	CS		119•70.06	550,455.8779	905,539.0896			
			Ls•150.000'					
	ST EQN		121•20.06 BK •121•18.60 AH	550,605.8151	905,534.8980			
		N 02° 05'01" W						
•10 TO	PITO		133•79.96	551,866.3383	905,489.0369		•10 XO	133•80.66
		N 02° 05'01" W						
	PS		134•11.38	551,897.7342	905,487.8947		•10 XO	134•12.08
		N 02° 05'01" W						
•10 TO	PS		134•82.38	551,968.6873	905,485.3132		•10 XO	134•82.38
		N 02° 05'01" W						
	PITO		135•13.79	552,000.0832	905,484.1710		•10 XO	135•13.79
		N 02° 05'01" W						
104	TS		136•58.05	552,144.2408	905,478.9262	I•5° 35'00" (LT) V•70 MPH Δ•2° 30'36" (LT) R•3960.630' L•173.50' D•1° 26'48" C•173.49' T•86.77' Eq=2.50" Eu=2.46"		
			Ls•212.450'					
	SC		138•70.50	552,356.4660	905,469.3044			
	CC	(N 04° 52'31" W)		552,106.3734	901,516.5783			
	PI			552,443.4182	905,468.0414			
	CS		140•44.00	552,529.3283	905,454.5599			
			Ls•212.450'					
	ST EQN		142•56.45 BK •142•57.84 AH	552,740.1173	905,428.1002			
		N 07° 40'01" W						

SOUTHBOUND TRACK

CURVE NO.	DESC.	BEARING (CHORD BEARING)	STATION	COORDINATES NORTHING	COORDINATES EASTING	DATA	EQUATION DATA TRACK	EQUATION DATA STATION
105	TS		143•69.46	552,850.7343	905,413.2091	I•5° 33'18" (RT) V•58 MPH Δ•4° 06'41" (RT) R•3974.370' L•285.20' D•1° 26'30" C•285.14' T•142.66' Eq=2.00" Eu=1.40"		
			Ls•100.132'					
	SC		144•69.59	552,950.0256	905,400.2669			
	CC	(N 04° 53'22" W)		553,430.6073	909,345.4739			
	PI			553,091.4498	905,380.8043			
	CS		147•54.79	553,234.1248	905,375.9636			
			Ls•100.132'					
	ST EQN		148•54.92 BK •148•53.53 AH	553,334.1717	905,371.8534			
		N 02° 06'43" W						
106	TS		184•94.90	556,973.0641	905,237.6619	I•3° 20'00" (LT) V•58 MPH Δ•1° 53'11" (LT) R•3960.000' L•130.38' D•1° 26'49" C•130.38' T•65.20' Eq=2.00" Eu=1.41"		
			Ls•100.000'					
	SC		185•94.90	557,072.9791	905,233.5562			
	CC	(N 03° 46'43" W)		556,877.0922	901,278.4041			
	PI			557,138.1789	905,231.5730			
	CS		187•25.28	557,203.0732	905,224.9641			
			Ls•100.000'					
	ST		188•25.28	557,302.6602	905,215.8938			
		N 05° 26'43" W						
107	TS		189•31.96	557,408.8517	905,205.7710	I•3° 20'00" (RT) V•58 MPH Δ•1° 53'11" (RT) R•3960.000' L•130.38' D•1° 26'49" C•130.38' T•65.20' Eq=2.00" Eu=1.41"		
			Ls•100.000'					
	SC		190•31.96	557,508.4388	905,196.7007			
	CC	(N 03° 46'43" W)		557,834.4198	909,143.2607			
	PI			557,573.3331	905,190.0918			
	CS		191•62.34	557,638.5329	905,188.1086			
			Ls•100.000'					
	ST EQN		192•62.33 BK •192•61.74 AH	557,738.4479	905,184.0029			
		N 02° 06'43" W						
108	TS		205•39.76	559,015.6046	905,136.9051	I•23° 12'46" (LT) V•58 MPH Δ•17° 25'31" (LT) R•1980.000' L•602.18' D•2° 53'37" C•599.86' T•303.43' Eq=4.00" Eu=2.81"		
			Ls•200.000					
	SC		207•39.76	559,215.2937	905,126.1725			
	CC	(N 13° 43'06" W)		559,042.5302	903,153.7241			
	PI			559,522.0919	905,118.2274			
	CS		213•41.94	559,798.0422	904,983.9158			
			Ls•200.000'					
	ST		215•41.94	559,980.2156	904,901.4306			
		N 25° 19'29" W						
109	TS		217•19.80	560,131.0626	904,830.0457	I•22° 47'14" (RT) V•58 MPH Δ•16° 15'35" (RT) R•1994.780' L•589.30' D•2° 52'20" C•587.16' T•296.81' Eq=4.00" Eu=2.76"		
			Ls•204.041'					
	SC		219•23.84	560,316.9341	904,745.9338			
	CC	(N 13° 55'52" W)		561,076.9080	906,590.2730			
	PI			560,586.7825	904,614.3865			
	CS		225•13.15	560,886.8266	904,604.5700			
			Ls•204.041'					
	ST EQN		227•17.19 BK •227•11.34 AH	561,090.4602	904,592.0638			
		N 02° 32'16" W						

SUBJECT TO CHANGE

FCB Designed by	08-05 Date							
JLB Drawn by	09-05 Date							
JAE Checked by	05-06 Date							
Approved by	Date	No	Date	By / Chk	App	Revisions		

NORTH CORRIDOR METRORAIL EXTENSION - PRELIMINARY ENGINEERING (100% SUBMITTAL)

MIAMI-DADE TRANSIT

PARSONS
7500 CORPORATE CENTER DRIVE, SUITE 500
MIAMI, FLORIDA 33126
PHONE: (786) 464-1000 FAX: (786) 845-7119
CERTIFICATE OF AUTHORIZATION NO. 1838

Approved | Date | Approved | Date

CURVE DATA AND COORDINATES

SOUTHBOUND TRACK DATA

SHEET 1 OF 4

Scale NONE | Drawing TK-105 | Sheet 54

5/12/2006 5:35:44 PM s:\MDT North\trackway\TK105-SB Cv1.dgn

SOUTHBOUND TRACK

CURVE NO.	DESC.	BEARING (CHORD BEARING)	STATION	COORDINATES NORTHING	COORDINATES EASTING	DATA	EQUATION DATA TRACK	EQUATION DATA STATION
	TS		239+48.82	562,326.7274	904,537.2732	I=1° 26'00" (LT) V=70 MPH Δ=0° 43'02" (LT) R=8000.000' L=100.13' D=0° 42'58" C=100.13' T=50.07' Ea=2.00" Eu=0.46"		
			Ls=100.000'					
	SC		240+48.82	562,426.6197	904,532.6374			
110	CC	(N 03° 15'16" W)		562,022.4682	896,542.8526			
	PI			562,476.6515	904,530.6286			
	CS		241+48.95	562,526.5887	904,526.9532			
			Ls=100.000'					
	ST		242+48.95	562,626.3626	904,520.2360			
		N 03° 58'16" W						
	TS		243+55.25	562,732.4074	904,512.8745	I=1° 26'00" (RT) V=70 MPH Δ=0° 43'02" (RT) R=8000.000' L=100.13' D=0° 42'58" C=100.13' T=50.07' Ea=2.00" Eu=0.46"		
			Ls=100.000'					
	SC		244+55.25	562,832.1813	904,506.1573			
111	CC	(N 03° 15'16" W)		563,336.3018	912,490.2579			
	PI			562,882.1185	904,502.4819			
	CS		245+55.38	562,932.1503	904,500.4730			
			Ls=100.000'					
	ST EQN		246+55.38 BK =246+55.49 AH	563,032.0427	904,495.8373			
		N 02° 32'16" W						
	TS		255+59.77	563,935.4361	904,455.7995	I=13° 12'04" (LT) V=46 MPH Δ=5° 33'42" (LT) R=1500.000' L=145.60' D=3° 49'11" C=145.55' T=72.86' Ea=2.75" Eu=2.91"		
			Ls=200.000'					
	SC		257+59.77	564,134.9545	904,442.5095			
112	CC	(N 09° 08'17" W)		563,968.8601	902,951.7337			
	PI			564,208.8510	904,443.6819			
	CS		259+05.37	564,278.6522	904,419.3947			
			Ls=200.000'					
	ST EQN		261+05.37 BK =261+11.55 AH	564,472.2736	904,369.4452			
		N 15° 44'19" W						
	TS		265+12.10	564,857.8035	904,260.7967	I=13° 28'30" (RT) V=46 MPH Δ=5° 50'00" (RT) R=1589.75' L=161.85' D=3° 36'15" C=161.78' T=81.00' Ea=2.75" Eu=2.59"		
			Ls=212.026'					
	SC		267+24.13	565,063.0677	904,207.8450			
113	CC	(N 09° 00'04" W)		565,391.3667	905,763.3272			
	PI			565,140.7258	904,181.0646			
	CS		268+85.98	565,222.8588	904,182.5330			
			Ls=212.026'					
	ST EQN		270+98.01 BK =270+94.57 AH	565,434.4390	904,169.4538			
		N 02° 15'50" W						
	TS		274+63.25	565,802.8312	904,154.8908	I=32° 37'10" (RT) V=46 MPH Δ=24° 32'28" (RT) R=1514.770' L=648.81' D=3° 46'57" C=643.87' T=329.46' Ea=2.75" Eu=2.85"		
			Ls=213.569'					
	SC		276+76.82	566,016.3256	904,151.4718			
114	CC	(N 14° 02'45" E)		565,969.3981	905,665.5148			
	PI			566,352.7636	904,133.1514			
	CS		283+25.63	566,640.9403	904,307.7374			
			Ls=213.569'					
	ST EQN		285+39.20 BK =285+30.83 AH	566,827.6739	904,411.2851			
		N 30° 21'20" E						

SOUTHBOUND TRACK

CURVE NO.	DESC.	BEARING (CHORD BEARING)	STATION	COORDINATES NORTHING	COORDINATES EASTING	DATA	EQUATION DATA TRACK	EQUATION DATA STATION
	TS		288+94.04	567,141.0869	904,594.8371	I=32° 43'27" (LT) V=58 MPH Δ=22° 43'16" (LT) R=1785.180' L=707.93' D=3° 12'34" C=703.30' T=358.68' Ea=3.75" Eu=3.81"		
			Ls=311.663'					
	SC		292+05.70	567,414.3977	904,744.3996			
115	CC	(N 13° 59'37" E)		568,178.8337	903,131.1714			
	PI			567,728.3626	904,938.7783			
	CS		299+13.63	568,096.8270	904,914.4668			
			Ls=311.663'					
	ST EQN		302+25.29 BK =302+33.72 AH	568,408.3606	904,910.6526			
		N 02° 22'07" W						
	TS		313+83.65	569,557.3099	904,863.1304	I=1° 44'01" (RT) V=70 MPH Δ=0° 52'00" (RT) R=6610.450' L=100.00' D=0° 52'00" C=100.00' T=50.00' Ea=2.00" Eu=0.97"		
			Ls=100.000'					
	SC		314+83.65	569,657.2344	904,859.2497			
116	CC	(N 01° 30'06" W)		569,880.4540	911,465.9298			
	PI			569,707.1905	904,856.9311			
	CS		315+83.65	569,757.1995	904,856.6290			
			Ls=100.000'					
	ST		316+83.65	569,857.1900	904,855.2687			
		N 00° 38'06" W						
	TS		317+83.65	569,957.1834	904,854.1604	I=1° 44'01" (LT) V=70 MPH Δ=0° 52'00" (LT) R=6610.450' L=100.00' D=0° 52'00" C=100.00' T=50.00' Ea=2.00" Eu=0.97"		
			Ls=100.000'					
	SC		318+83.65	570,057.1738	904,852.8001			
117	CC	(N 01° 30'06" W)		569,933.9194	898,243.4992			
	PI			570,107.1823	904,852.4979			
	CS		319+83.65	570,157.1379	904,850.1794			
			Ls=100.000'					
	ST EQN		320+83.65 BK =320+84.41 AH	570,257.0624	904,846.2987			
		N 02° 22'07" W						
	PS		323+83.14	570,555.5341	904,833.9535		PKT TK	323+83.14
		N 02° 22'07" W						
	PITO		324+14.56	570,586.9240	904,832.6552		PKT TK	324+14.56
		N 02° 22'07" W						
	PITO		335+48.58	571,719.9808	904,785.7905		PKT TK	335+49.57
		N 02° 22'07" W						
	PS		335+80.00	571,751.3706	904,784.4922		PKT TK	335+80.99
		N 02° 22'07" W						
	TS		343+41.31	572,512.0325	904,753.0302	I=1° 40'00" (LT) V=70 MPH Δ=0° 50'02" (LT) R=6880.000' L=100.15' D=0° 49'58" C=100.15' T=50.07' Ea=2.00" Eu=0.86"		
			Ls=100.000'					
	SC		344+41.31	572,611.9365	904,748.6556			
118	CC	(N 03° 12'07" W)		572,277.6646	897,876.7809			
	PI			572,661.9850	904,746.8280			
	CS		345+41.46	572,711.9250	904,743.0621			
			Ls=100.000'					
	ST		346+41.46	572,811.6936	904,736.2668			
		N 04° 02'07" W						

SUBJECT TO CHANGE

FCB Designed by	08-05 Date							
JLB Drawn by	09-05 Date							
JAE Checked by	05-06 Date							
Approved by	Date	No.	Date	By / Chk	App.	Revisions		

NORTH CORRIDOR METRORAIL EXTENSION - PRELIMINARY ENGINEERING (100% SUBMITTAL)

MIAMI-DADE TRANSIT

PARSONS
7600 CORPORATE CENTER DRIVE, SUITE 500
MIAMI, FLORIDA 33126
PHONE: (786) 464-1000 FAX: (786) 845-7119
CERTIFICATE OF AUTHORIZATION NO. 1838

Approved | Date | Approved | Date

CURVE DATA AND COORDINATES

SOUTHBOUND TRACK DATA

SHEET 2 OF 4

Scale: NONE | Drawing: TK-106 | Sheet: 55

5/12/2006 5:35:52 PM s:\mdt north\trackway\tk106-sb cv2.dgn

SOUTHBOUND TRACK

CURVE NO.	DESC.	BEARING (CHORD BEARING)	STATION	COORDINATES NORTHING	COORDINATES EASTING	DATA	EQUATION DATA TRACK	EQUATION DATA STATION
	TS		347+53.88	572,923.8411	904,728.3553	I=1° 40'00" (RT) V=70 MPH Δ=0° 50'02" (RT) R=6880.000' L=100.15' D=0° 49'58" C=100.15' T=50.07' Eq=2.00" Eu=0.86"		
			Ls=100.000'					
	SC		348+53.88	573,023.6097	904,721.5599			
119	CC	(N 03° 12'07" W)		573,457.8702	911,587.8411			
	PI			573,073.5500	904,717.7940			
	CS		349+54.03	573,123.5987	904,715.9664			
			Ls=100.000'					
	ST EQN		350+54.03 BK 350+55.27 AH	573,223.5028	904,711.5918			
		N 02° 22'07" W						
	TS		362+26.81	574,394.0423	904,663.1768	I=7° 39'03" (LT) V=70 MPH Δ=4° 30'48" (LT) R=3960.610' L=311.99' D=1° 26'48" C=311.91' T=156.07' Eq=2.50" Eu=2.46"		
			Ls=216.878'					
	SC		364+43.69	574,610.6370	904,652.2373			
120	CC	(N 06° 11'38" W)		574,338.6898	900,700.9747			
	PI			574,767.0186	904,647.7501			
	CS		367+55.67	574,920.7221	904,618.5849			
			Ls=212.878'					
	ST EQN		369+72.55 BK 369+74.47 AH	575,134.6209	904,582.8046			
		N 10° 01'09" W						
	TS		372+47.33	575,403.3190	904,535.3328	I=8° 24'19" (RT) V=58 MPH Δ=6° 52'04" (RT) R=3974.390' L=476.39' D=1° 26'30" C=476.10' T=238.48' Eq=2.00" Eu=1.39"		
			Ls=106.650'					
	SC		373+53.98	575,508.4236	904,517.2480			
121	CC	(N 05° 49'00" W)		576,147.3111	908,439.9510			
	PI			575,743.4274	904,475.2448			
	CS		378+30.37	575,982.0736	904,468.9974			
			Ls=106.650'					
	ST EQN		379+37.02 BK 379+34.91 AH	576,088.6659	904,465.5167			
		N 01° 36'51" W						
	TS		385+58.37	576,711.8804	904,447.9559	I=4° 18'00" (LT) V=58 MPH Δ=2° 51'11" (LT) R=3960.000' L=197.19' D=1° 26'49" C=197.17' T=98.62' Eq=2.00" Eu=1.41"		
			Ls=100.000'					
	SC		386+58.37	576,811.8272	904,444.7185			
122	CC	(N 03° 45'51" W)		576,650.3173	900,488.0135			
	PI			576,910.4710	904,442.3600			
	CS		388+55.56	577,008.5735	904,431.7747			
			Ls=100.000'					
	ST		389+55.56	577,108.0831	904,421.8900			
		N 05° 54'50" W						
	TS		390+57.26	577,209.2348	904,411.4120	I=4° 18'00" (RT) V=58 MPH Δ=2° 51'11" (RT) R=3960.000' L=197.19' D=1° 26'49" C=197.17' T=98.62' Eq=2.00" Eu=1.41"		
			Ls=100.000'					
	SC		391+57.26	577,308.7444	904,401.5272			
123	CC	(N 03° 45'51" W)		577,667.0006	908,345.2884			
	PI			577,406.8460	904,390.9420			
	CS		393+54.45	577,505.4889	904,388.5835			
			Ls=100.000'					
	ST EQN		394+54.45 BK 394+53.48 AH	577,605.4357	904,385.3461			
		N 01° 36'51" W						

SOUTHBOUND TRACK

CURVE NO.	DESC.	BEARING (CHORD BEARING)	STATION	COORDINATES NORTHING	COORDINATES EASTING	DATA	EQUATION DATA TRACK	EQUATION DATA STATION
	TS		401+99.48	578,351.1405	904,364.3334	I=4° 33'54" (RT) V=46 MPH Δ=2° 19'05" (RT) R=2550.000' L=103.17' D=2° 14'49" C=103.16' T=51.59' Eq=1.75" Eu=1.58"		
			Ls=100.000'					
	SC		402+99.48	578,451.1154	904,362.1701			
124	CC	(N 00° 40'06" E)		578,472.9508	906,912.0766			
	PI			578,502.7250	904,360.0620			
	CS		404+02.65	578,554.2713	904,363.3736			
			Ls=100.000'					
	ST		405+02.65	578,654.1685	904,367.8688			
		N 02° 57'03" E						
	TS		409+63.66	579,114.5671	904,391.6020	I=5° 51'07" (LT) V=46 MPH Δ=3° 18'20" (LT) R=2250.000' L=129.80' D=2° 32'47" C=129.79' T=64.92' Eq=2.00" Eu=1.77"		
			Ls=100.000'					
	SC		410+63.66	579,214.4677	904,396.0101			
125	CC	(N 00° 01'30" E)		579,280.3415	902,146.9746			
	PI			579,279.3610	904,400.0970			
	CS		411+93.47	579,344.2578	904,396.0666			
			Ls=100.000'					
	ST EQN		412+93.47 BK 412+92.73 AH	579,444.1622	904,391.7454			
		N 02° 54'04" W						
•10 TO	PITO		443+13.32	582,460.8797	904,238.8682		•10 XO	443+14.02
		N 02° 54'04" W						
	PS		443+44.74	582,492.2561	904,237.2782		•10 XO	443+54.44
		N 02° 54'04" W						
•10 TO	PS		444+15.74	582,563.1651	904,233.6847		•10 XO	444+15.74
		N 02° 54'04" W						
	PITO		444+47.15	582,594.5415	904,232.0947		•10 XO	444+47.15
		N 02° 54'04" W						
	TS		449+33.48	583,080.2413	904,207.4813	I=3° 38'49" (LT) V=70 MPH Δ=2° 43'22" (LT) R=6200.000' L=294.62' D=0° 55'27" C=294.60' T=147.34' Eq=2.00" Eu=1.17"		
			Ls=100.000'					
	SC		450+33.48	583,180.0989	904,202.1517			
126	CC	(N 04° 43'28" W)		582,816.3814	898,012.8295			
	PI			583,327.3040	904,194.9610			
	CS		453+28.10	583,473.6924	904,177.8876			
			Ls=100.000'					
	ST		454+28.10	583,573.0701	904,166.7514			
		N 06° 32'52" W						
	TS		455+65.07	583,709.1514	904,151.1317	I=3° 30'00" (RT) V=70 MPH Δ=2° 34'33" (RT) R=6200.000' L=278.73' D=0° 55'27" C=278.71' T=139.39' Eq=2.00" Eu=1.17"		
			Ls=100.000'					
	SC		456+65.07	583,808.5291	904,139.9955			
127	CC	(N 04° 47'52" W)		584,465.8400	910,305.0537			
	PI			583,947.0170	904,123.8290			
	CS		459+43.81	584,086.2621	904,116.6839			
			Ls=100.000'					
	ST EQN		460+43.81 BK 460+43.07 AH	584,186.1057	904,111.0984			
		N 03° 02'52" W						
	TS		467+89.07	584,931.0530	904,071.4328	I=8° 19'50" (RT) V=46 MPH Δ=5° 47'03" (RT) R=2250.000' L=227.14' D=2° 32'47" C=227.04' T=113.67' Eq=2.00" Eu=1.77"		
			Ls=100.000'					
	SC		468+89.07	585,030.9460	904,066.8556			
128	CC	(N 01° 07'03" E)		585,100.6260	906,315.7764			
	PI			585,144.6220	904,060.0610			
	CS		471+16.22	585,257.9466	904,071.2831			
			Ls=100.000'					
	ST		472+16.22	585,357.5851	904,079.7519			
		N 05° 16'58" E						

SUBJECT TO CHANGE
CURVE DATA AND COORDINATES

FCB Designed by	08-05 Date						
JLB Drawn by	09-05 Date						
JAE Checked by	05-06 Date						
Approved by	Date	No.	Date	By / Chk	App.	Revisions	

NORTH CORRIDOR METRORAIL EXTENSION - PRELIMINARY ENGINEERING (100% SUBMITTAL)

MIAMI-DADE TRANSIT

PARSONS
7600 CORPORATE CENTER DRIVE, SUITE 500
MIAMI, FLORIDA 33126
PHONE: (786) 464-1000 FAX: (786) 845-7119
CERTIFICATE OF AUTHORIZATION NO. 1836

Approved | Date | Approved | Date

SOUTHBOUND TRACK DATA

SHEET 3 OF 4

Scale: NONE | Drawing: TK-107 | Sheet: 56

5/12/2006 5:36:01 PM s:\mdt_north\trackway\tk107-sb cv3.dgn

SOUTHBOUND TRACK

CURVE NO.	DESC.	BEARING (CHORD BEARING)	STATION	COORDINATES NORTHING	COORDINATES EASTING	DATA	EQUATION DATA TRACK	EQUATION DATA STATION
	TS		474+36.40	585,576.8325	904,100.0239			
			Ls=100.000'					
	SC		475+36.40	585,676.4711	904,108.4928			
						I=7° 41'46" (LT)		
129	CC	(N 01° 26'05" E)		585,833.7917	901,863.9995	V=46 MPH		
	PI			585,777.3270	904,118.5620	Δ=5° 08'58" (LT)		
						R=2250.000'		
	CS		477+38.62	585,878.5605	904,113.5541	L=202.22'		
			Ls=100.000'			D=2° 32'47"		
	ST		478+38.62 BK	585,978.4981	904,110.0835	C=202.15'		
	EQN		=478+36.43 AH			T=101.18'		
						Eq=2.00"		
		N 02° 24'48" W				Eu=1.77"		
	TS		482+42.53	586,384.2453	904,092.9830			
			Ls=104.620'					
	SC		483+47.15	586,488.7841	904,088.8709	I=4° 37'48" (RT)		
						V=70 MPH		
130	CC	(N 00° 05'54" W)		586,698.1871	910,299.6718	Δ=3° 39'56" (RT)		
	PI			586,687.5134	904,080.2015	R=6214.330'		
						L=397.56'		
	CS		487+44.71	586,886.2714	904,088.1888	D=0° 55'19"		
			Ls=104.620'			C=397.49'		
	ST		488+49.33 BK	586,990.8237	904,091.9420	T=198.85'		
	EQN		=488+48.17 AH			Eq=2.00"		
		N 02° 13'00" E				Eu=1.16"		
	TS		489+80.30	587,122.8467	904,097.0523			
			Ls=243.078'					
	SC		492+23.37	587,365.7949	904,104.8670	I=4° 59'24" (LT)		
						V=70 MPH		
131	CC	(N 00° 16'42" W)		587,484.1433	897,905.3265	Δ=2° 44'38" (LT)		
	PI			587,514.2920	904,112.2043	R=6200.670'		
						L=296.95'		
	CS		495+20.32	587,662.7109	904,103.4247	D=0° 55'26"		
			Ls=243.078'			C=296.92'		
	ST		497+63.40 BK	587,905.5717	904,093.2504	T=148.50'		
	EQN		=497+64.64 AH			Eq=2.00"		
		N 02° 46'24" W				Eu=1.17"		
	TS		505+05.98	588,646.0355	904,057.3816			
			Ls=100.000'					
	SC		506+05.98	588,745.9302	904,052.7994	I=1° 46'36" (RT)		
						V=70 MPH		
132	CC	(N 01° 53'06" W)		589,010.4769	910,547.4137	Δ=0° 53'43" (RT)		
	PI			588,796.6532	904,050.0856	R=6500.000'		
						L=101.57'		
	CS		507+07.55	588,847.4448	904,049.4586	D=0° 52'53"		
			Ls=100.000'			C=101.57'		
	ST		508+07.55	588,947.4246	904,047.4631	T=50.79'		
						Eq=2.00"		
		N 00° 59'47" W				Eu=1.02"		
	TS		512+04.96	589,344.7796	904,040.5515			
			Ls=100.000'					
	SC		513+04.96	589,444.7607	904,038.6163	I=1° 22'20" (LT)		
						V=70 MPH		
133	CC	(N 01° 40'57" W)		589,246.9450	895,540.9185	Δ=0° 41'53" (LT)		
	PI			589,496.5473	904,037.0117	R=8500.000'		
						L=103.57'		
	CS		514+08.53	589,548.2860	904,035.5753	D=0° 40'27"		
			Ls=100.000'			C=103.57'		
	ST		515+08.53 BK	589,648.2083	904,031.6382	T=51.79'		
	EQN		=515+08.97 AH			Eq=2.00"		
		N 02° 22'07" W				Eu=1.06"		

SOUTHBOUND TRACK

CURVE NO.	DESC.	BEARING (CHORD BEARING)	STATION	COORDINATES NORTHING	COORDINATES EASTING	DATA	EQUATION DATA TRACK	EQUATION DATA STATION
	TS		525+58.25	590,696.5879	903,988.2717			
			Ls=100.000'					
	SC		526+58.25	590,796.4835	903,983.7183	I=9° 26'01" (LT)		
						V=58 MPH		
134	CC	(N 07° 05'08" W)		590,582.8742	900,029.4837	Δ=7° 59'12" (LT)		
	PI			591,073.0162	903,972.7007	R=3960.000'		
						L=552.01'		
	CS		532+10.25	591,343.8310	903,915.6830	D=1° 26'49"		
			Ls=100.000'			C=551.56'		
	ST		533+10.25 BK	591,441.8014	903,895.6417	T=276.45'		
	EQN		=533+14.66 AH			Eq=2.00"		
		N 11° 48'08" W				Eu=1.41"		
	TS		534+19.82	591,544.7338	903,874.1336			
			Ls=100.132'					
	SC		535+19.95	591,642.8334	903,854.0649	I=10° 00'00" (RT)		
						V=58 MPH		
135	CC	(N 06° 48'08" W)		592,406.6648	907,754.3441	Δ=8° 33'23" (RT)		
	PI			591,934.1115	903,792.7717	R=3974.370'		
						L=593.53'		
	CS		541+13.48	592,231.6343	903,783.8302	D=1° 26'30"		
			Ls=100.132'			C=592.98'		
	ST		542+13.61 BK	592,331.7019	903,780.2607	T=297.32'		
	EQN		=542+11.11 AH			Eq=2.00"		
		N 01° 48'08" W				Eu=1.40"		
	TS		549+46.86	593,067.0972	903,757.1198			
			Ls=107.010'					
	SC		550+53.87	593,174.0747	903,754.5967	I=11° 00'00" (RT)		
						V=46 MPH		
136	CC	(N 03° 41'52" E)		593,191.8045	906,019.0573	Δ=8° 17'33" (RT)		
	PI			593,338.5365	903,748.5783	R=2264.530'		
						L=327.75'		
	CS		553+81.62	593,500.8556	903,775.7152	D=2° 31'49"		
			Ls=107.010'			C=327.76'		
	ST		554+88.63 BK	593,606.6186	903,791.9869	T=164.16'		
	EQN		=554+85.85 AH			Eq=2.00"		
		N 09° 11'52" E				Eu=1.75"		
	TS		556+14.89	593,733.9942	903,812.6119			
			Ls=100.000'					
	SC		557+14.89	593,832.8220	903,827.8640	I=11° 10'14" (LT)		
						V=46 MPH		
137	CC	(N 03° 36'45" E)		594,143.0219	901,599.3497	Δ=8° 37'26" (LT)		
	PI			594,000.5681	903,855.7763	R=2250.000'		
						L=338.66'		
	CS		560+53.55	594,170.4927	903,849.1820	D=2° 32'47"		
			Ls=100.000'			C=338.34'		
	ST		561+53.55 BK	594,270.4540	903,846.4799	T=169.65'		
	EQN		=561+58.77 AH			Eq=2.00"		
		N 01° 58'22" W				Eu=1.77"		
	PS		563+14.22	594,425.8071	903,841.1288		•15 OXO	563+14.22
		N 01° 58'22" W						
	PITO		563+54.51	594,466.0749	903,839.7417		•15 OXO	563+54.51
		N 01° 58'22" W						
	PITO		568+25.88	594,937.1670	903,823.5148		•15 OXO	568+27.60
		N 01° 58'22" W						
	PS		568+66.17	594,977.4348	903,822.1277		•15 OXO	568+67.89
		N 01° 58'22" W						
	PS		574+72.18	595,583.0807	903,801.2660		PKT TK	574+72.18
		N 01° 58'22" W						
	PITO		575+03.60	595,614.4788	903,800.1845		PKT TK	575+03.60
		N 01° 58'22" W						
	POE/POT		581+14.68	596,225.1154	903,779.1509			

SUBJECT TO CHANGE

CURVE DATA AND COORDINATES

FCB	08-05							
Designed by	Date							
JLB	09-05							
Drawn by	Date							
JAE	05-06							
Checked by	Date							
Approved by	Date	No.	Date	By / Chk	App.	Revisions		

NORTH CORRIDOR METRORAIL EXTENSION - PRELIMINARY ENGINEERING (100% SUBMITTAL)

MIAMI-DADE COUNTY

MIAMI-DADE TRANSIT

PARSONS
7600 CORPORATE CENTER DRIVE, SUITE 500
MIAMI, FLORIDA 33126
PHONE: (786) 464-1000 FAX: (786) 845-7119
CERTIFICATE OF AUTHORIZATION NO. 1838

Approved | Date | Approved | Date

SOUTHBOUND TRACK DATA

SHEET 4 OF 4

Scale NONE | Drawing TK-108 | Sheet 57

No. 10 CROSSOVER

CURVE NO.	DESC.	BEARING (CHORD BEARING)	STATION	COORDINATES NORTHING	COORDINATES EASTING	DATA	EQUATION DATA TRACK	EQUATION DATA STATION
•10 T.O.	PS		132•08.89	551,695.8916	905,509.2475		NB TRK	132•08.89
		N 02° 05' 01" W						
	PITO		132•40.31	551,727.2875	905,508.1052		NB TRK	132•40.31
		N 07° 48' 30" W						
•10 T.O.	PITO		133•80.66	551,866.3383	905,489.0369		SB TRK	133•79.96
		N 02° 05' 01" W						
	PS		134•12.08	551,897.7342	905,487.8947		SB TRK	134•11.38

No. 10 CROSSOVER

CURVE NO.	DESC.	BEARING (CHORD BEARING)	STATION	COORDINATES NORTHING	COORDINATES EASTING	DATA	EQUATION DATA TRACK	EQUATION DATA STATION
•10 T.O.	PS		134•82.38	551,968.6873	905,485.3132		SB TRK	134•82.38
		N 02° 05' 01" W						
	PITO		135•13.79	552,000.0832	905,484.1710		SB TRK	135•13.79
		N 03° 38' 28" E						
•10 T.O.	PITO		136•54.14	552,140.1520	905,493.0842		NB TRK	136•53.44
		N 02° 05' 01" W						
	PS		136•85.56	552,171.5479	905,491.9419		NB TRK	136•84.86

POCKET TRACK

CURVE NO.	DESC.	BEARING (CHORD BEARING)	STATION	COORDINATES NORTHING	COORDINATES EASTING	DATA	EQUATION DATA TRACK	EQUATION DATA STATION
•10 T.O.	PS		323•83.14	570,557.1631	904,873.3365		NB TRK	323•83.14
		N 02° 22' 07" W						
	PITO		324•14.56	570,588.5529	904,872.0382		NB TRK	324•14.56
		N 08° 05' 36" W						
•5 EQ T.O.	PITO		326•12.14	570,784.1641	904,844.2223			
		N 02° 22' 07" W						
	PS EQN		326•32.56 BK =326•31.57 AH	570,804.5659	904,843.3784			
		N 02° 22' 07" W						
•5 EQ T.O.	PS		333•31.57	571,503.9679	904,814.4503			
		N 02° 22' 07" W						
	PITO		333•51.99	571,524.3696	904,813.6064			
		N 03° 21' 22" E						
•10 T.O.	PITO		335•49.57	571,721.6098	904,825.1735		NB TRK	335•48.58
		N 02° 22' 07" W						
	PS		335•80.99	571,752.9996	904,823.8752		NB TRK	335•80.00

POCKET TRACK

CURVE NO.	DESC.	BEARING (CHORD BEARING)	STATION	COORDINATES NORTHING	COORDINATES EASTING	DATA	EQUATION DATA TRACK	EQUATION DATA STATION
•10 T.O.	PS		323•83.14	570,555.5341	904,833.9535		SB TRK	323•83.14
		N 02° 22' 07" W						
	PITO		324•14.56	570,586.9240	904,832.6552		SB TRK	324•14.56
		N 03° 21' 22" E						
•5 EQ T.O.	PITO		326•12.14	570,784.1641	904,844.2223			
		N 02° 22' 07" W						
	PS EQN		326•32.56 BK =326•31.57 AH	570,804.5659	904,843.3784			
		N 02° 22' 07" W						
•5 EQ T.O.	PS		333•31.57	571,503.9679	904,814.4503			
		N 02° 22' 07" W						
	PITO		333•51.99	571,524.3696	904,813.6064			
		N 08° 05' 36" W						
•10 T.O.	PITO		335•49.57	571,719.9808	904,785.7905		SB TRK	335•48.58
		N 02° 22' 07" W						
	PS		335•80.99	571,751.3706	904,784.4922		SB TRK	335•80.00

No. 10 CROSSOVER

CURVE NO.	DESC.	BEARING (CHORD BEARING)	STATION	COORDINATES NORTHING	COORDINATES EASTING	DATA	EQUATION DATA TRACK	EQUATION DATA STATION
•10 T.O.	PS		441•42.25	582,290.7387	904,261.5084		NB TRK	441•42.25
		N 02° 54' 04" W						
	PITO		441•73.67	582,322.1151	904,259.9183		NB TRK	441•73.67
		N 08° 37' 33" W						
•10 T.O.	PITO		443•14.02	582,460.8797	904,238.8682		SB TRK	443•13.32
		N 02° 54' 04" W						
	PS		443•45.44	582,492.2561	904,237.2782		SB TRK	443•44.74

No. 10 CROSSOVER

CURVE NO.	DESC.	BEARING (CHORD BEARING)	STATION	COORDINATES NORTHING	COORDINATES EASTING	DATA	EQUATION DATA TRACK	EQUATION DATA STATION
•10 T.O.	PS		444•15.74	582,563.1651	904,233.6847		SB TRK	444•15.74
		N 02° 54' 04" W						
	PITO		444•47.15	582,594.5415	904,232.0947		SB TRK	444•47.15
		N 02° 49' 25 E						
•10 T.O.	PITO		445•87.50	582,734.7233	904,239.0087		NB TRK	445•86.80
		N 02° 54' 04" W						
	PS		446•18.92	582,766.0997	904,237.4186		NB TRK	446•18.22

SUBJECT TO CHANGE

FCB Designed by	08-05 Date						
JLB Drawn by	09-05 Date						
JAE Checked by	05-06 Date						
Approved by	Date	No.	Date	By / Chk	App.	Revisions	

NORTH CORRIDOR METRORAIL EXTENSION - PRELIMINARY ENGINEERING (100% SUBMITTAL)

CURVE DATA AND COORDINATES

MIAMI-DADE COUNTY

MIAMI-DADE TRANSIT

PARSONS
7500 CORPORATE CENTER DRIVE, SUITE 500
MIAMI, FLORIDA 33126
PHONE: (786) 464-1000 FAX: (786) 845-7119
CERTIFICATE OF AUTHORIZATION NO. 1838

Approved | Date | Approved | Date

SPECIAL TRACK DATA

SHEET 1 OF 2

Scale NONE | Drawing TK-109 | Sheet 58

No. 15 DOUBLE CROSSOVER

CURVE NO.	DESC.	BEARING (CHORD BEARING)	STATION	COORDINATES NORTHING	COORDINATES EASTING	DATA	EQUATION DATA TRACK	EQUATION DATA STATION
•15 T.O.	PS		563•14.22	594,427.1640	903,880.5221		NB TRK	563•14.22
		N 01° 58' 22" W						
	PITO		563•54.51	594,467.4318	903,879.1350		NB TRK	563•54.51
		N 05° 47' 28" W						
	PC		564•42.35	594,554.8237	903,870.2717			
	CC	(N 07° 00' 25" W)		594,292.5787	901,284.5361	SEE CURVE DATA BELOW		
	PI			594,609.7020	903,864.7060			
	PT		565•52.65	594,664.2947	903,856.8169			
		N 08° 13' 22" W						
	PI		565•91.05	594,702.2994	903,851.3249		DXO	565•91.05
		N 08° 13' 22" W						
	PC		566•29.45	594,740.3042	903,845.8329			
	CC	(N 07° 00' 25" W)		595,112.0201	906,418.1136	SEE CURVE DATA BELOW		
	PI			594,794.8969	903,837.9438			
	PT		567•39.76	594,849.7752	903,832.3780			
		N 05° 47' 28" W						
•15 T.O.	PITO		568•27.60	594,937.1670	903,823.5148		SB TRK	568•25.88
		N 01° 58' 22" W						
	PS		568•67.89	594,977.4348	903,822.1277		SB TRK	568•66.17

No. 15 DOUBLE CROSSOVER

CURVE NO.	DESC.	BEARING (CHORD BEARING)	STATION	COORDINATES NORTHING	COORDINATES EASTING	DATA	EQUATION DATA TRACK	EQUATION DATA STATION
•15 T.O.	PS		563•14.22	594,425.8071	903,841.1288		SB TRK	563•14.22
		N 01° 58' 22" W						
	PITO		563•54.51	594,466.0749	903,839.7417		SB TRK	563•54.51
		N 01° 50' 44" E						
	PC		564•42.35	594,553.8695	903,842.5706			
	CC	(N 03° 03' 41" E)		594,470.1683	906,440.2225	SEE CURVE DATA BELOW		
	PI			594,609.0007	903,844.3470			
	PT		565•52.65	594,664.0069	903,848.4610			
		N 04° 16' 38" E						
	PI		565•91.05	594,702.2994	903,851.3249		DXO	565•91.05
		N 04° 16' 38" E						
	PC		566•29.45	594,740.5920	903,854.1888			
	CC	(N 03° 03' 41" E)		594,934.4306	901,262.4273	SEE CURVE DATA BELOW		
	PI			594,795.5982	903,858.3027			
	PT		567•39.76	594,850.7294	903,860.0792			
		N 01° 50' 44" E						
•15 T.O.	PITO		568•27.60	594,938.5240	903,862.9081		NB TRK	568•25.88
		N 01° 58' 22" W						
	PS		568•67.89	594,978.7918	903,861.5210		NB TRK	568•66.17

POCKET TRACK

CURVE NO.	DESC.	BEARING (CHORD BEARING)	STATION	COORDINATES NORTHING	COORDINATES EASTING	DATA	EQUATION DATA TRACK	EQUATION DATA STATION
•10 T.O.	PS		574•72.18	595,584.4377	903,840.6593		NB TRK	574•72.18
		N 01° 58' 22" W						
	PITO		575•03.60	595,615.8357	903,839.5778		NB TRK	575•03.60
		N 07° 41' 51" W						
•5 EQ T.O.	PITO		577•01.18	595,811.6344	903,813.1134			
		N 01° 58' 22" W						
	PS EQN		577•21.59 BK •577•20.61 AH	595,832.0415	903,812.4105			
		N 01° 58' 22" W						
	POT		581•14.60	596,225.7939	903,798.8475			

POCKET TRACK

CURVE NO.	DESC.	BEARING (CHORD BEARING)	STATION	COORDINATES NORTHING	COORDINATES EASTING	DATA	EQUATION DATA TRACK	EQUATION DATA STATION
•10 T.O.	PS		574•72.18	595,583.0807	903,801.2660		SB TRK	574•72.18
		N 01° 58' 22" W						
	PITO		575•03.60	595,614.4788	903,800.1845		SB TRK	575•03.60
		N 03° 45' 07" E						
•5 EQ T.O.	PITO		577•01.18	595,811.6344	903,813.1134			
		N 01° 58' 22" W						
	PS EQN		577•21.59 BK •577•20.61 AH	595,832.0415	903,812.4105			
		N 01° 58' 22" W						
	POE/POT		581•14.60	596,225.7939	903,798.8475			

TYPICAL FOR ABOVE CURVES

V=46 MPH
Δ=2° 25' 54"
R=2599.000'
L=110.30'
D=2° 12' 16"
C=110.29'
T=55.16'
Ea=0.00"
Eu=3.27"

SUBJECT TO CHANGE

FCB Designed by	08-05 Date						
JLB Drawn by	09-05 Date						
JAE Checked by	05-06 Date						
Approved by	Date	No.	Date	By / Chk	App.	Revisions	

NORTH CORRIDOR METRORAIL EXTENSION - PRELIMINARY ENGINEERING (100% SUBMITTAL)

CURVE DATA AND COORDINATES

MIAMI-DADE COUNTY

MIAMI-DADE TRANSIT

PARSONS
7600 CORPORATE CENTER DRIVE, SUITE 500
MIAMI, FLORIDA 33126
PHONE: (786) 464-1000 FAX: (786) 845-7119
CERTIFICATE OF AUTHORIZATION NO. 1838

Approved | Date | Approved | Date

SPECIAL TRACK DATA

SHEET 2 OF 2

Scale: NONE | Drawing: TK-110 | Sheet: 59

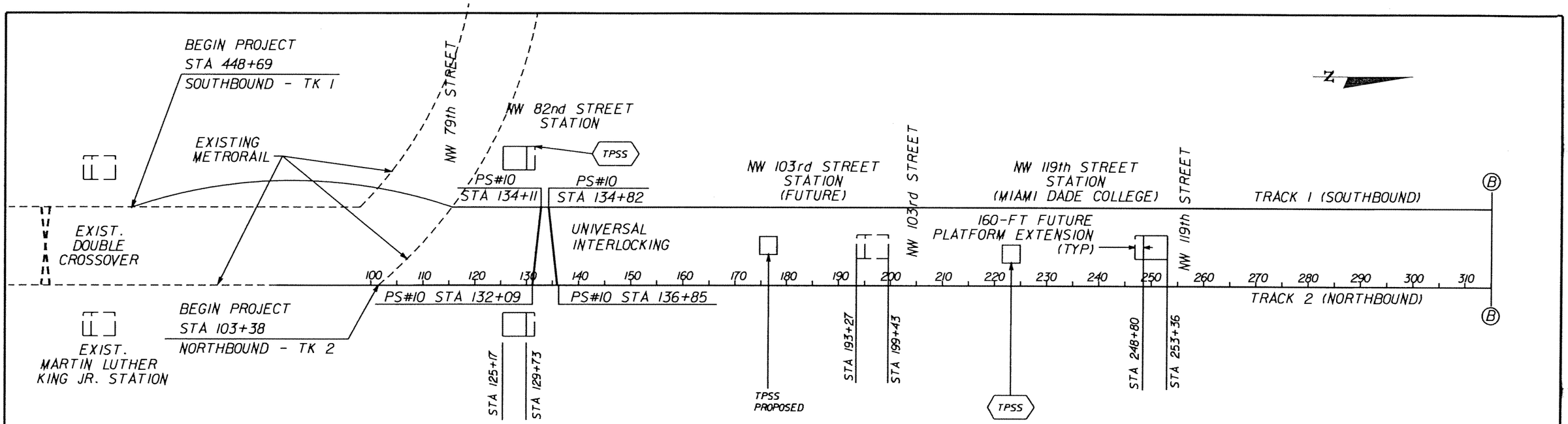

SWITCH SIZE
JUNCTION# 15
ALL OTHERS #10
POCKET TRACK # 10 W/# 5 EQ.
TERMINAL DOUBLE CROSSOVER # 15

LEGEND
PLATFORM (INCL. FUTURE EXPANSION)
TPSS TRACTON POWER SUBSTATION (FINAL LOCATIONS DURING PE)

SUBJECT TO CHANGE

FCB Designed by	08-05 Date						
AAC Drawn by	09-05 Date						
JAE Checked by	05-06 Date						
Approved by	Date	No.	Date	By / Chk.	App.	Revisions	

NORTH CORRIDOR METRORAIL EXTENSION - PRELIMINARY ENGINEERING (100% SUBMITTAL)

MIAMI-DADE COUNTY
MIAMI-DADE TRANSIT

PARSONS
7600 CORPORATE CENTER DRIVE, SUITE 500
MIAMI, FLORIDA 33126
PHONE: (786) 464-1000 FAX: (786) 845-7119
CERTIFICATE OF AUTHORIZATION NO. 1838

Approved	Date	Approved	Date

TRACK

TRACK SCHEMATIC

Scale	Drawing	Sheet
NTS	TK-111	60

ROADWAY GENERAL NOTES

1. B.M. DATA IS NATIONAL GEODETIC VERTICAL DATUM OF 1929 (NGVD-29).

2. ALL PUBLIC LAND CORNERS AND MONUMENTS WITHIN THE LIMITS OF CONSTRUCTION ARE TO BE PROTECTED BY CONTRACTOR AS FOLLOWS: CORNERS AND MONUMENTS IN CONFLICT WITH THE WORK AND IN DANGER OF BEING DAMAGED, DESTROYED OR COVERED SHALL BE PROPERLY REFERENCED BY A REGISTERED-LAND SURVEYOR IN ACCORDANCE WITH THE MINIMUM TECHNICAL STANDARDS OF THE FLORIDA BOARD OF PROFESSIONAL LAND SURVEYOR PRIOR TO BEGINNING WORK AT THAT SITE. THE CONTRACTOR SHALL RETAIN THE LAND SURVEYOR TO REFERENCE, AND RESTORE UPON COMPLETION OF THE WORK, ALL SUCH CORNERS AND MONUMENTS AND SHALL FURNISH TO THE DISTRICT LOCATION ENGINEER AND MIAMI-DADE TRANSIT A SIGNED AND SEALED COPY OF LAND SURVEYOR'S REFERENCE DRAWING. INCLUDE ALL COST OF REFERENCING, RESTORING AND PRESERVING IN THE BID PRICE FOR ITEM 101-1 MOBILIZATION.

3. ALL N.G.V.D. BENCH MARK MONUMENTS WITHIN THE LIMITS OF CONSTRUCTION SHALL BE PROTECTED AND REFERENCED BY THE CONTRACTOR IN THE SAME WAY AS PUBLIC LAND CORNERS EXCEPT THAT THE LAND SURVEYORS SHALL NOT BE REQUIRED TO RESTORE THE N.G.V.D. BENCH MARK UPON COMPLETION OF THE WORK. THE CONTRACTOR SHALL PROMPTLY TRANSMIT ALL DISPLACED OR DAMAGED N.G.V.D. DISCS TO THE DISTRICT LOCATION SURVEYOR, WHO SHALL NOTIFY THE GEODETIC INFORMATION CENTER. INCLUDE ALL COST OF REFERENCING AND PROTECTING IN THE BID PRICE FOR ITEM 101-1 MOBILIZATION.

4. ALL EXCESS MATERIAL AS DESIGNATED BY THE ENGINEER IS TO BE DISPOSED BY THE CONTRACTOR IN AREAS PROVIDED BY HIM WITHIN 72 HOURS OF BEING DEPOSITED IN THE CONSTRUCTION AREA AND AT THE CONTRACTOR'S EXPENSE.

5. THE CONTRACTOR SHALL USE A STREET SWEEPER (USING WATER) OR OTHER EQUIPMENT CAPABLE OF CONTROLLING AND REMOVING DUST. APPROVAL OF THE USE OF SUCH EQUIPMENT IS CONTINGENT UPON ITS DEMONSTRATED ABILITY TO DO THE WORK. CLEANING AND SWEEPING IS TO BE INCLUDED IN ITEM 102-1 MAINTENANCE OF TRAFFIC.

6. THE CONTRACTOR SHALL PAINT ALL STATIONS WITH STENCILED NUMBERS ON FACE OF THE CURB.
   A. FROM THE BEGINNING OF THE PROJECT WHERE THE CURB IS TO REMAIN
   B. AT NEW CURB NO LATER THAN 72 HOURS AFTER BEING POURED.
   C. WHERE CURB DOES NOT EXIST AND SHALL NOT BE CONSTRUCTED THE CONTRACTOR SHALL MAINTAIN STATIONING WITH SURVEYING STAKES.
   THE CONTRACTOR SHALL MAINTAIN THE STATION MARKS VISIBLE UNTIL FINAL INSPECTION. COST TO BE INCLUDED IN RELATED PAY ITEM 102-1 MAINTENANCE OF TRAFFIC.

7. COMMERCIAL MATERIAL INCLUDED FOR DRIVEWAY MAINTENANCE AND SAFE ACCESS TO RESIDENTIAL AND BUSINESS PROPERTIES AFFECTED BY CONSTRUCTION SHALL BE PAID ONLY ONCE PER ACCESS. IF THE MATERIAL IS REMOVED DURING SUBSEQUENT CONSTRUCTION OPERATIONS, IT SHALL BE REPLACED AT THE CONTRACTOR'S EXPENSE. QUANTITY FOR THIS ITEM MAY BE INCREASED, DECREASED OR OMITTED AS DIRECTED BY THE ENGINEER.

8. IF SHEETING, SHORING, OR DEWATERING, INCLUDING WELL POINTS ARE NECESSARY, THE CONTRACTOR MUST MONITOR AND CONTROL ALL WORK THAT MAY CAUSE CRACKING TO ANY ADJACENT BUILDING, STRUCTURE OR PROPERTY AREA. THE CONTRACTOR SHALL BE RESPONSIBLE FOR ANY DAMAGES CAUSED BY THESE OPERATIONS. COST OF SHEETING, SHORING OR DEWATERING, INCLUDING WELL POINTS, AND ALL MONITORING COST SHALL BE INCLUDED IN THE RELATED BID ITEMS FOR THE WORK BEING DONE.

9. THE CONTRACTOR SHALL BE RESPONSIBLE FOR OBTAINING THE DEWATERING PERMIT. COST OF PERMIT AND DEWATERING SHALL BE INCLUDED IN THE RELATED BID ITEM FOR THE WORK BEING DONE.

10. THE CONTRACTOR IS RESPONSIBLE FOR KEEPING EXISTING AND NEW INLETS CLEAN OF MILLING MATERIAL, LIMEROCK, DEBRIS, ETC. DURING THE CONSTRUCTION AT NO ADDITIONAL COST.

11. EXISTING UTILITES ARE BACKFILLED WITH FLOWABLE FILL. LARGE CHUNKS OF EXCAVATED MATERIAL SHALL BE REPLACED WITH SUITABLE MATERIAL OR PROCESSED TO MAKE THEM SUITABLE FOR BACKFILLING OR EMBANKMENT CONSTRUCTION. COST TO BE INCLUDED IN RELATED BID ITEMS.

12. CLEARING AND GRUBBING, GRADING AND OTHER INCIDENTAL WORK NECESSARY FOR HARMONIZATION OUTSIDE R/W SHALL BE INCLUDED IN RELATED BID ITEMS (ASPHALT, SOD, CONCRETE, BRICKS, ETC.)

13. THE CONTRACTOR SHALL PERFORM SELECTIVE CLEARING AND GRUBBING FOR THE WORK BEING DONE. COST TO BE INCLUDED IN 110-1-1, CLEARING AND GRUBBING.

14. SAW CUTTING OF THE EXISTING SIDEWALKS SHALL BE MADE ONLY AT THE NEAREST FLAG JOINTS.

DRAINAGE NOTES

1. EXISTING STORM SEWERS (PIPES, FRENCH DRAINS AND/ OR SLAB COVERED TRENCHES) MAY REMAIN IN PLACE IF NOT IN CONFLICT WITH PROPOSED CONSTRUCTION. PLUG OPEN ENDS WHERE NEEDED WITH MISCELLANEOUS CONCRETE TO BE PAID AS PER ITEM 400-1-15 UNLESS OTHERWISE STATED ON PLANS.

2. EXISTING STORM SEWERS (PIPES, FRENCH DRAINS AND/ OR SLAB COVERED TRENCHES) IN CONFLICT WITH PROPOSED CONSTRUCTION SHALL BE REMOVED. COST OF REMOVAL, DISPOSAL, BACKFILLING AND COMPACTING SHALL BE INCLUDED IN ITEM 110-1-1 CLEARING AND GRUBBING AS PER 110-6 OF STANDARD SPECIFICATIONS.

3. EXISTING INLETS, MANHOLES, RETAINING/GRAVITY WALLS THAT ARE PLACED OUT OF SERVICE AND ARE NOT SHOWN IN PLANS TO REMAIN SHALL BE REMOVED. COST OF REMOVAL, DISPOSAL, BACKFILLING AND COMPACTING SHALL BE INCLUDED IN PAY ITEM 110-1-1 CLEARING AND GRUBBING.

4. THERE SHALL BE NO MORE THAN THREE LATERAL DRAINAGE INSTALLATIONS WITHOUT BACKFILLING. BACKFILLING OF LATERAL DRAINAGE SHALL NOT LAG MORE THAN 72 HOURS BEHIND THE START OF EXCAVATION.

5. ELEVATIONS AND OFFSETS FOR CURB INLETS ARE GIVEN AT THE EDGE OF PAVEMENT.

RAILROAD NOTES

1. THE CONTRACTOR IS TO NOTIFY THE CONSTRUCTION PROJECT MANAGER/ ENGINEER AND THE MIAMI-DADE TRANSIT RAIL PROGRAMS ADMINIISTRATOR 72 HOURS PRIOR TO WORKING IN RAILROAD RIGHT-OF-WAY AND SCHEDULING FLAGGING SERVICES FROM THE RAILROAD. THE FLAGGING SERVICES WILL BE AVAILABLE 24 HOURS A DAY FROM MONDAY TO FRIDAY. IT IS FDOT'S POLICY TO PAY FOR THE RAILROAD FLAGGING SERVICES VIA AN AGREEMENT THAT CONTAINS SPECIFIC LANGUAGE. HOWEVER, IF THE CONTRACTOR REQUESTS FLAGGING SERVICES AND THE SERVICES ARE NOT USED, IT WILL BE THE CONTRACTOR'S RESPONSIBILITY TO REIMBURSE FDOT FOR THE UN-USED FLAGGING SERVICE DAYS.

2. THE CONTRACTOR SHALL BE RESPONSIBLE FOR FURNISHING RAILROAD LIABILITY INSURANCE IN ACCORADANCE WITH THE STANDARD SPECIFICATIONS FOR ROAD AND BRIDGE CONSTRUCTION UPON WORKING AT OR NEAR RAILROAD RIGHT-OF-WAY.

3. IF THE EXISTING RAILROAD CROSSING IS TO BE REHABILITATED BY THE RAILROAD COMPANY SOMETIME DURING THE DURATION OF THIS PROJECT, THE CONTRACTOR IS TO COORDINATE HIS WORK SCHEDULE WITH THE RAILROAD COMPANY'S WORK SCHEDULE IN THE VICINITY OF THE CROSSING. COST OF ADDITIONAL MOBILIZATION TO BE INCLUDED IN PAY ITEM 102-1, MAINTENANCE OF TRAFFIC.

UTILITIES NOTES

1. FOR UTILITY ADJUSTMENT SYMBOLS, SEE FDOT STANDARD INDEX NO. 002

2. ALL EXISTING UTILITIES ARE TO REMAIN UNLESS OTHERWISE NOTED.

3. TWO FULL BUSINESS DAYS PRIOR TO DIGGING THE CONTRACTOR SHALL CALL SUNSHINE STATE ONE CALL OF FLORIDA, TELEPHONE NUMBER 1-800-432-4770, AND THE UTILITY OWNER AND REQUEST UTILITY LOCATIONS. A CONTRACTOR'S REPRESENTATIVE MUST BE PRESENT WHEN UTILITY COMPANIES LOCATE THEIR FACILITIES.

4. THE CONTRACTOR IS ADVISED THAT PROPERTIES ADJACENT TO THE PROJECT HAVE ELECTRIC, TELEPHONE, GAS, WATER AND/OR SEWER SERVICE LATERALS WHICH MAY NOT BE SHOWN IN PLANS. THE CONTRACTOR MUST REQUEST THE LOCATION OF THESE LATERAL SERVICES FROM THE UTILITY COMPANIES. THE COST OF EXCAVATING, INSTALLING, BACKFILLING AND COMPACTING AROUND THESE LATERAL SERVICES MUST BE INCLUDED IN THE BID RELATED ITEM FOR THE WORK BEING DONE.

5. PRE-TRENCHING IN THE ALIGNMENT AND GRADE OF PROPOSED PIPES STRUCTURES, FRENCH DRAINS, SLAB COVERED TRENCHES, CONDUITS, POLE FOUNDATIONS AND/ OR SUB-GRADE SHALL BE PERFORMED SEVEN DAYS IN ADVANCE OF ITS CONSTRUCTION. THE CONTRACTOR SHALL PROVIDE UNDERGROUND UTILITY OWNERS AND THE DEPARTMENT WITH A SEVEN DAYS ADVANCE NOTICE OF ANY CONFLICT WITH PROPOSED CONSTRUCTION. THIS NOTIFICATION SHALL PROVIDE SURVEY INFORMATION ABOUT EXISTING UTILITY ALIGNMENT, GRADE AND POSSIBLE CONFLICTS. PAYMENT FOR PRE-TRENCHING, SURVEY AND BACKFILLING SHALL BE INCLUDED IN THE COST OF THE RELATED BID ITEM FOR THE WORK BEING DONE.

SUBJECT TO CHANGE

W.L.L. Designed by	05-06 Date					
J.N. Drawn by	05-06 Date					
C.V. Checked by	05-02-06 Date					
M.A.B. Approved by	05-05-06 Date	No.	Date	By / Chk	App.	Revisions

NORTH CORRIDOR METRORAIL EXTENSION - PRELIMINARY ENGINEERING (100% SUBMITTAL)

MIAMI-DADE COUNTY — MIAMI-DADE TRANSIT

PARSONS
7500 CORPORATE CENTER DRIVE, SUITE 500
MIAMI, FLORIDA 33126
PHONE: (786) 464-1000 FAX: (786) 845-7119
CERTIFICATE OF AUTHORIZATION NO. 1838

Approved ____ Date ____

BND
CIVIL ENGINEERING • ENVIRONMENTAL • AIRPORT • CONSTRUCTION MANAGEMENT • TRANSPORTATION
1200 NW 78 AVENUE, SUITE 400
MIAMI, FLORIDA 33126 - (305) 599-8495

Approved MICHAEL A. BUDALL, P.E. Date ____

ROADWAY

GENERAL NOTES

Scale 1" = 100' | Drawing RWP-01 | Sheet 61

ROADWAY GENERAL NOTES (CONT.)

UTILITY OWNERS:

COMPANY	CONTACT	TELEPHONE NO.
ADELPHIA COMMNUNICATIONS	MERCEDES ANDERSON	305-238-7690
BROWARD COUNTY OES-WATER SUPPLY	EVA FLORIAN	954-831-0916
COMCAST CABLE	THOMAS CARROLL	954-534-7417
FLORIDA CITY GAS	ALAN WILLIAMS	305-694-6870
CITY OF NORTH MIAMI	NINI BALAURAT	305-787-1006
CITY OF MIRAMAR	HENRY TALTON	954-602-3325
MIAMI DADE COMMUNITY COLLEGE	ROBERT BEALL	305-237-0869
FLORIDA GAS TRANSMISSION CO.	JOSEPH E. SANCHEZ	407-838-7171
FLORIDA POWER AND LIGHT	TRACY STERN	305-442-5966
FPL FIBERNET	NOEL REESE	305-552-3249
MCI	DEAN BOYERS	972-729-6016
MIAMI DADE WATER AND SEWER	PHILLIP TORRES	305-669-7658
XO COMMUNICATIONS	TERESA MILLER	703-547-2000
NORTH MIAMI BEACH PUBLIC WORKS DEPT.	MRS. MARCH	305-948-2967
PEOPLES GAS-MIAMI	ANGEL A. QUANT	305-573-3820
PROGRESS TELECOM	RICHARD SHEILDS	727-471-5336
QWEST COMMUNICATIONS	KIM JORDAN	1-800-283-4237
BELLSOUTH SOUTH BROWARD	AMZI M. POSTEN	954-723-2540
BELLSOUTH	STEVEN B. MASSIE	305-222-8745
TCG SOUTH FLORIDA	BILL HAM	407-578-8000
TRAFFIC CONTROL DEVICES	FRED HORN	407-869-5316
GLOBAL CROSSING COMMUNICATIONS, INC.	BRUCE NACHREINER	954-924-5524
WILTEL COMMUNICATIONS	RUSSELL RYAN	1-888-265-2283
FDOT	HARVEY SHONE	305-470-5458
SFWMD	BEVERLY MILLER	561-682-6979
MIAMI DADE COUNTY PUBLIC WORKS DEPT.	OSCAR RUBIO	305-592-8925
CITY OF OPA LOCKA	WAYNE EMMONS	786-426-3786
CITY OF MIAMI	FRANCIS MITCHELL	305-416-1218
TELCOVE	TONY KOWALESKI	954-217-6700
XSPEDIUS FIBER GROUP	TOM LEWIS	954-334-0308
DERM	MARIE K. HALL	305-372-6438

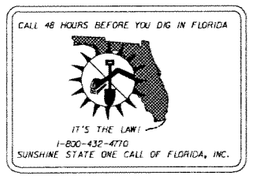

SUBJECT TO CHANGE

W.L.L. 05-06 Designed by Date						
J.N. 05-06 Drawn by Date						
C.V. 05-02-06 Checked by Date						
M.A.B. 05-05-06 Approved by Date	No.	Date	By / Chk	App.	Revisions	

NORTH CORRIDOR METRORAIL EXTENSION - PRELIMINARY ENGINEERING (100% SUBMITTAL)

MIAMI-DADE COUNTY — MIAMI-DADE TRANSIT

PARSONS
7600 CORPORATE CENTER DRIVE, SUITE 500
MIAMI, FLORIDA 33126
PHONE: (786) 464-1000 FAX: (786) 845-7119
CERTIFICATE OF AUTHORIZATION NO. 1836

Approved ----- Date -----

BND
CIVIL ENGINEERING • ENVIRONMENTAL • AIRPORT • CONSTRUCTION MANAGEMENT • TRANSPORTATION
1200 NW 78 AVENUE, SUITE 400
MIAMI, FLORIDA 33126 - (305) 599-8495

Approved MICHAEL A. BUDALL, P.E. Date -----

ROADWAY

GENERAL NOTES

Scale 1" = 100' | Drawing RWP-02 | Sheet 62

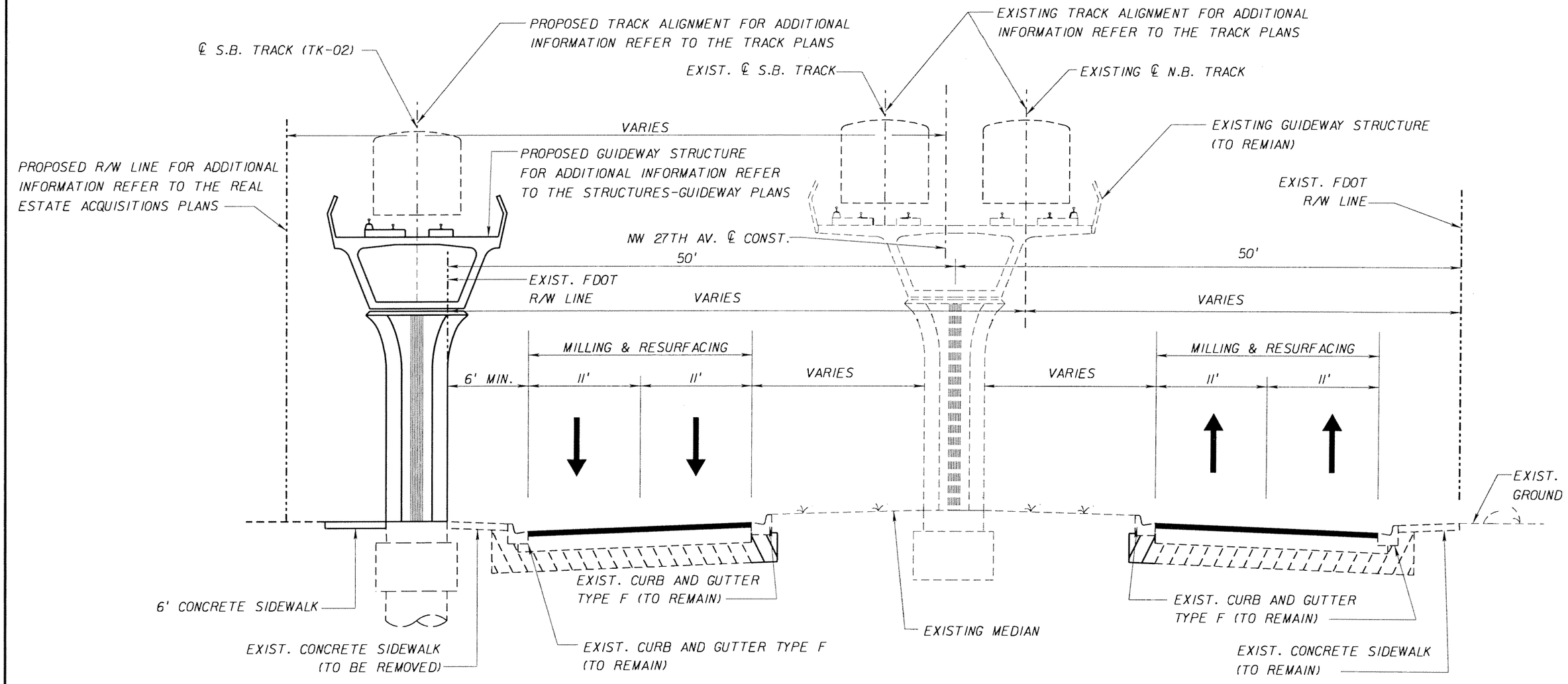

TYPICAL SECTION
SR 9 / NW 27TH AVENUE
STA. 194+75.00 TO STA. 225+00.00 (℄ NW 27TH AVE.)

MILLING

MILL EXISTING ASPHALT PAVEMENT 2.50" AVG. DEPTH
(2.25" BELOW THE LIP OF GUTTER ON LOW SIDE)

RESURFACING

TYPE SP STRUCTURAL COURSE (TRAFFIC C) (100 LBS/SY 1.00" AVG.)
AND FRICTION COURSE FC 12.5 (160 LBS/SY, 1.50") (RUBBER)

STATIONING REFER TO ℄ N.B. TRACK
UNLESS OTHERWISE NOTED

SUBJECT TO CHANGE

W.L.L. Designed by	05-06 Date					
J.N. Drawn by	05-06 Date					
K.K. Checked by	05-02-06 Date					
M.A.B. Approved by	05-05-06 Date	No.	Date	By / Chk	App.	Revisions

NORTH CORRIDOR METRORAIL EXTENSION - PRELIMINARY ENGINEERING (100% SUBMITTAL)

MIAMI-DADE COUNTY — MIAMI-DADE TRANSIT

PARSONS
7600 CORPORATE CENTER DRIVE, SUITE 500
MIAMI, FLORIDA 33126
PHONE: (786) 464-1000 FAX: (786) 845-7119
CERTIFICATE OF AUTHORIZATION NO. 1838
Approved ____ Date ____

BND
CIVIL ENGINEERING • ENVIRONMENTAL • AIRPORT • CONSTRUCTION MANAGEMENT • TRANSPORTATION
1200 NW 78 AVENUE, SUITE 400
MIAMI, FLORIDA 33126 - (305) 599-8495
Approved MICHAEL A. BUDALL, P.E. Date ____

ROADWAY

TYPICAL SECTION

Scale	Drawing	Sheet
N.T.S.	RWP-03	63

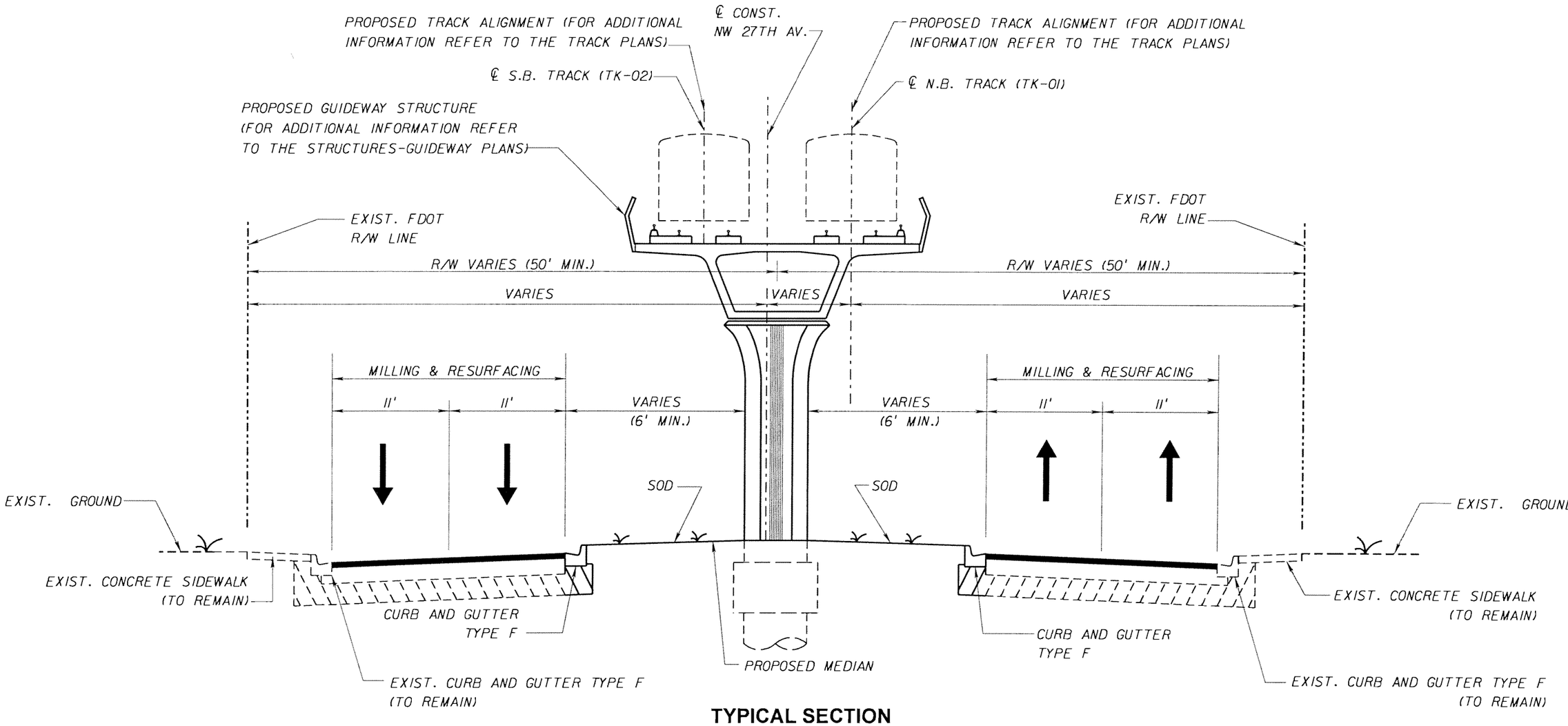

TYPICAL SECTION
SR 9 / NW 27TH AVENUE
STA. 121+80.00 TO STA. 140+80.00

MILLING

MILL EXISTING ASPHALT PAVEMENT 2.50" AVG. DEPTH
(2.25" BELOW THE LIP OF GUTTER ON LOW SIDE)

RESURFACING

TYPE SP STRUCTURAL COURSE (TRAFFIC C) (100 LBS/SY 1.00" AVG.)
AND FRICTION COURSE FC 12.5 (160 LBS/SY, 1.50") (RUBBER)

STATIONING REFER TO ℄ N.B. TRACK
UNLESS OTHERWISE NOTED

SUBJECT TO CHANGE

W.L.L. Designed by	05-06 Date					
J.N. Drawn by	05-06 Date					
K.K. Checked by	05-02-06 Date					
M.A.B. Approved by	05-05-06 Date	No.	Date	By / Chk	App.	Revisions

NORTH CORRIDOR METRORAIL EXTENSION - PRELIMINARY ENGINEERING (100% SUBMITTAL)

MIAMI-DADE COUNTY
MIAMI-DADE TRANSIT

PARSONS
7600 CORPORATE CENTER DRIVE, SUITE 500
MIAMI, FLORIDA 33126
PHONE: (786) 464-1000 FAX: (786) 845-7119
CERTIFICATE OF AUTHORIZATION NO. 1838

Approved ____ Date ____

BND
CIVIL ENGINEERING • ENVIRONMENTAL • AIRPORT • CONSTRUCTION MANAGEMENT • TRANSPORTATION
1200 NW 78 AVENUE, SUITE 400
MIAMI, FLORIDA 33126 - (305) 599-8495

Approved MICHAEL A. BUDALL, P.E. Date ____

ROADWAY

TYPICAL SECTIONS

Scale N.T.S. | Drawing RWP-04 | Sheet 4

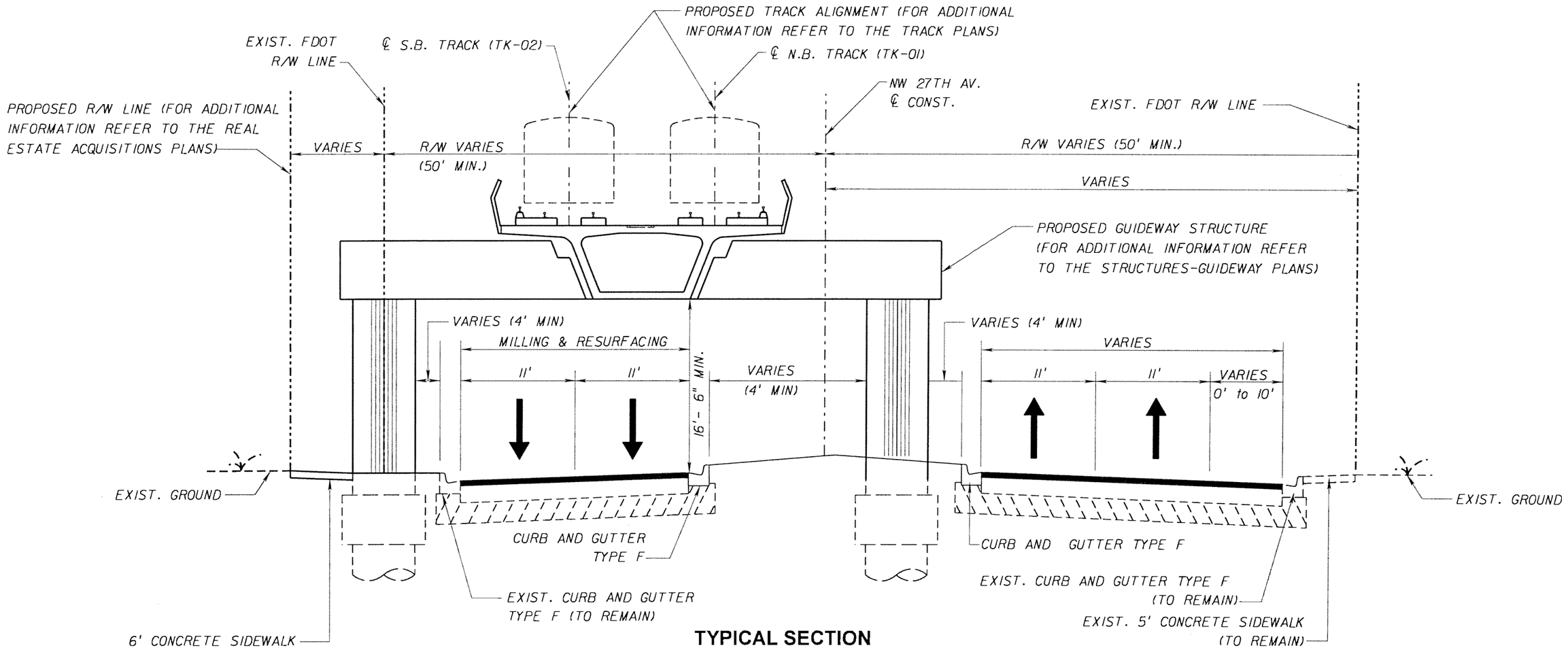

TYPICAL SECTION
SR 9 / NW 27TH AVENUE
STA. 111+00.00 TO STA. 121+80.00
STA. 140+80.00 TO STA. 142+15.00

MILLING

MILL EXISTING ASPHALT PAVEMENT 2.50" AVG. DEPTH
(2.25" BELOW THE LIP OF GUTTER ON LOW SIDE)

RESURFACING

TYPE SP STRUCTURAL COURSE (TRAFFIC C) (100 LBS/SY 1.00" AVG.)
AND FRICTION COURSE FC 12.5 (160 LBS/SY, 1.50") (RUBBER)

STATIONING REFER TO ℄ N.B. TRACK
UNLESS OTHERWISE NOTED

SUBJECT TO CHANGE

W.L.L. Designed by	05-06 Date						
J.N. Drawn by	05-06 Date						
K.K. Checked by	05-02-06 Date						
M.A.B. Approved by	05-05-06 Date	No.	Date	By / Chk	App.	Revisions	

NORTH CORRIDOR METRORAIL EXTENSION - PRELIMINARY ENGINEERING (100% SUBMITTAL)

MIAMI-DADE COUNTY — MIAMI-DADE TRANSIT

PARSONS
7600 CORPORATE CENTER DRIVE, SUITE 500
MIAMI, FLORIDA 33126
PHONE: (786) 464-1000 FAX: (786) 845-7119
CERTIFICATE OF AUTHORIZATION NO. 1838
Approved — Date

BND
CIVIL ENGINEERING • ENVIRONMENTAL • AIRPORT • CONSTRUCTION MANAGEMENT • TRANSPORTATION
1200 NW 78 AVENUE, SUITE 400
MIAMI, FLORIDA 33126 - (305) 599-8495
Approved MICHAEL A. BUDALL, P.E. — Date

ROADWAY

TYPICAL SECTIONS

Scale N.T.S. | Drawing RWP-05 | Sheet 65

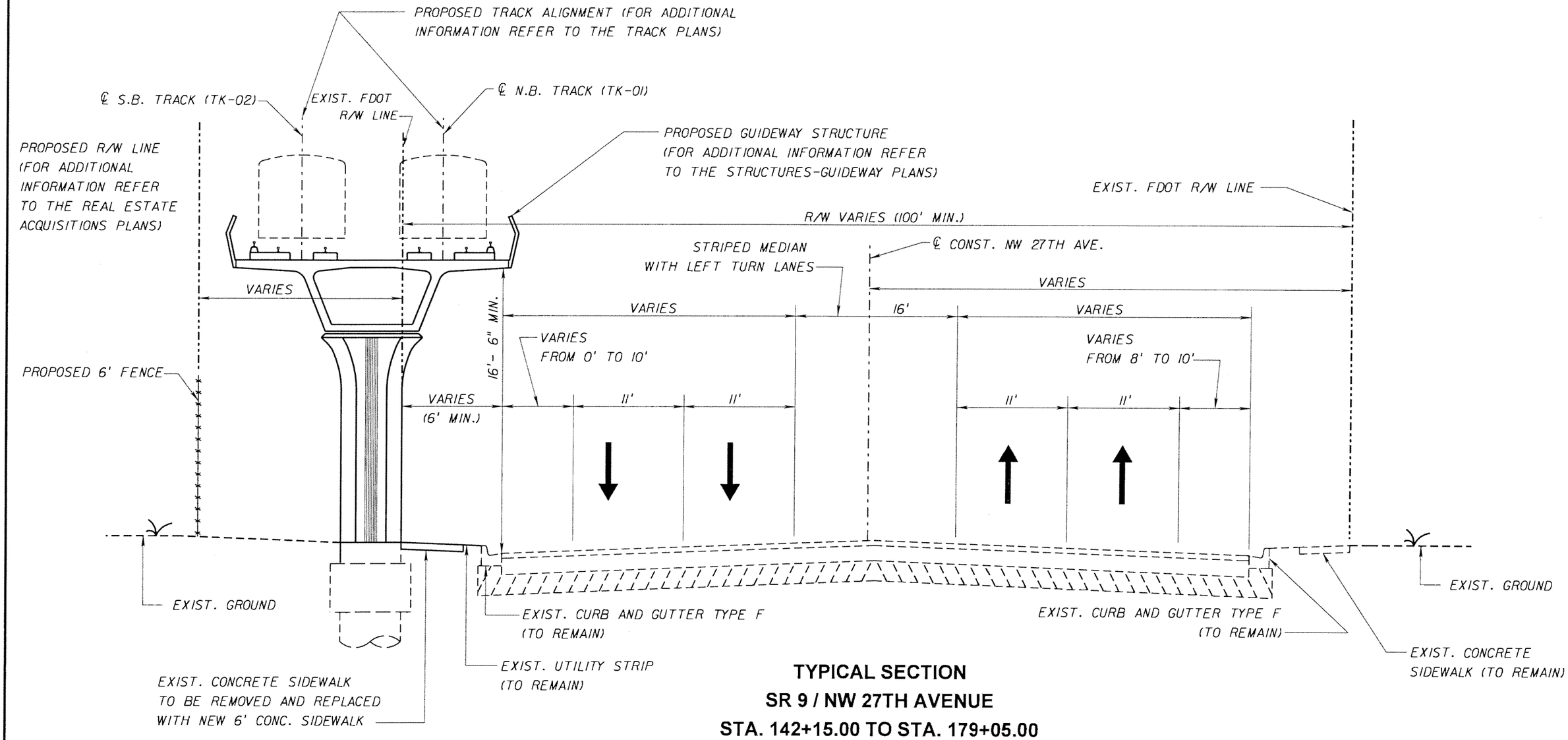

TYPICAL SECTION
SR 9 / NW 27TH AVENUE
STA. 142+15.00 TO STA. 179+05.00

STATIONING REFER TO ℄ N.B. TRACK
UNLESS OTHERWISE NOTED

SUBJECT TO CHANGE

W.L.L. Designed by	05-06 Date					
J.N. Drawn by	05-06 Date					
K.K. Checked by	05-02-06 Date					
M.A.B. Approved by	05-05-06 Date	No.	Date	By / Chk	App.	Revisions

NORTH CORRIDOR METRORAIL EXTENSION - PRELIMINARY ENGINEERING (100% SUBMITTAL)

MIAMI-DADE COUNTY — MIAMI-DADE TRANSIT

PARSONS
7600 CORPORATE CENTER DRIVE, SUITE 500
MIAMI, FLORIDA 33126
PHONE: (786) 464-1000 FAX: (786) 845-7119
CERTIFICATE OF AUTHORIZATION NO. 1638

BND
CIVIL ENGINEERING • ENVIRONMENTAL • AIRPORT • CONSTRUCTION MANAGEMENT • TRANSPORTATION
1200 NW 78 AVENUE, SUITE 400
MIAMI, FLORIDA 33126 - (305) 599-8495

Approved — Date
Approved MICHAEL A. BUDALL, P.E. Date

ROADWAY

TYPICAL SECTIONS

Scale N.T.S. | Drawing RWP-06 | Sheet 66

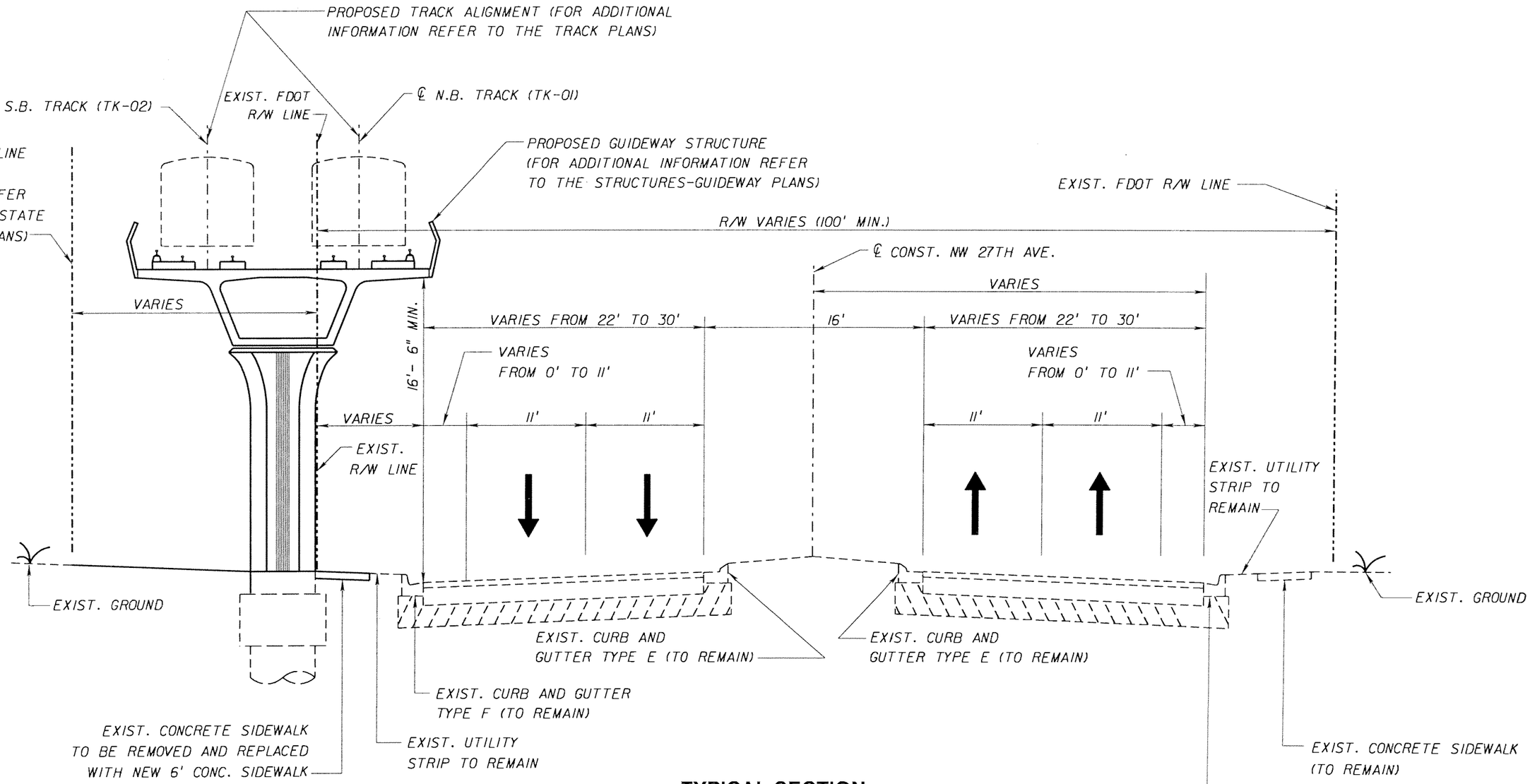

TYPICAL SECTION
SR 9 / NW 27TH AVENUE
STA. 179+05.00 TO STA. 185+70.00

STATIONING REFER TO ℄ N.B. TRACK UNLESS OTHERWISE NOTED

SUBJECT TO CHANGE

W.L.L. Designed by	05-06 Date					
J.N. Drawn by	05-06 Date					
K.K. Checked by	05-02-06 Date					
M.A.B. Approved by	05-05-06 Date	No.	Date	By / Chk	App.	Revisions

NORTH CORRIDOR METRORAIL EXTENSION - PRELIMINARY ENGINEERING (100% SUBMITTAL)

MIAMI-DADE COUNTY — MIAMI-DADE TRANSIT

PARSONS
7600 CORPORATE CENTER DRIVE, SUITE 500
MIAMI, FLORIDA 33126
PHONE: (786) 464-1000 FAX: (786) 845-7119
CERTIFICATE OF AUTHORIZATION NO. 1838
Approved Date

BND
CIVIL ENGINEERING • ENVIRONMENTAL • AIRPORT • CONSTRUCTION MANAGEMENT • TRANSPORTATION
1200 NW 78 AVENUE, SUITE 400
MIAMI, FLORIDA 33126 - (305) 599-8495
Approved MICHAEL A. BUDALL, P.E. Date

ROADWAY

TYPICAL SECTIONS

Scale N.T.S. | Drawing RWP-07 | Sheet 67

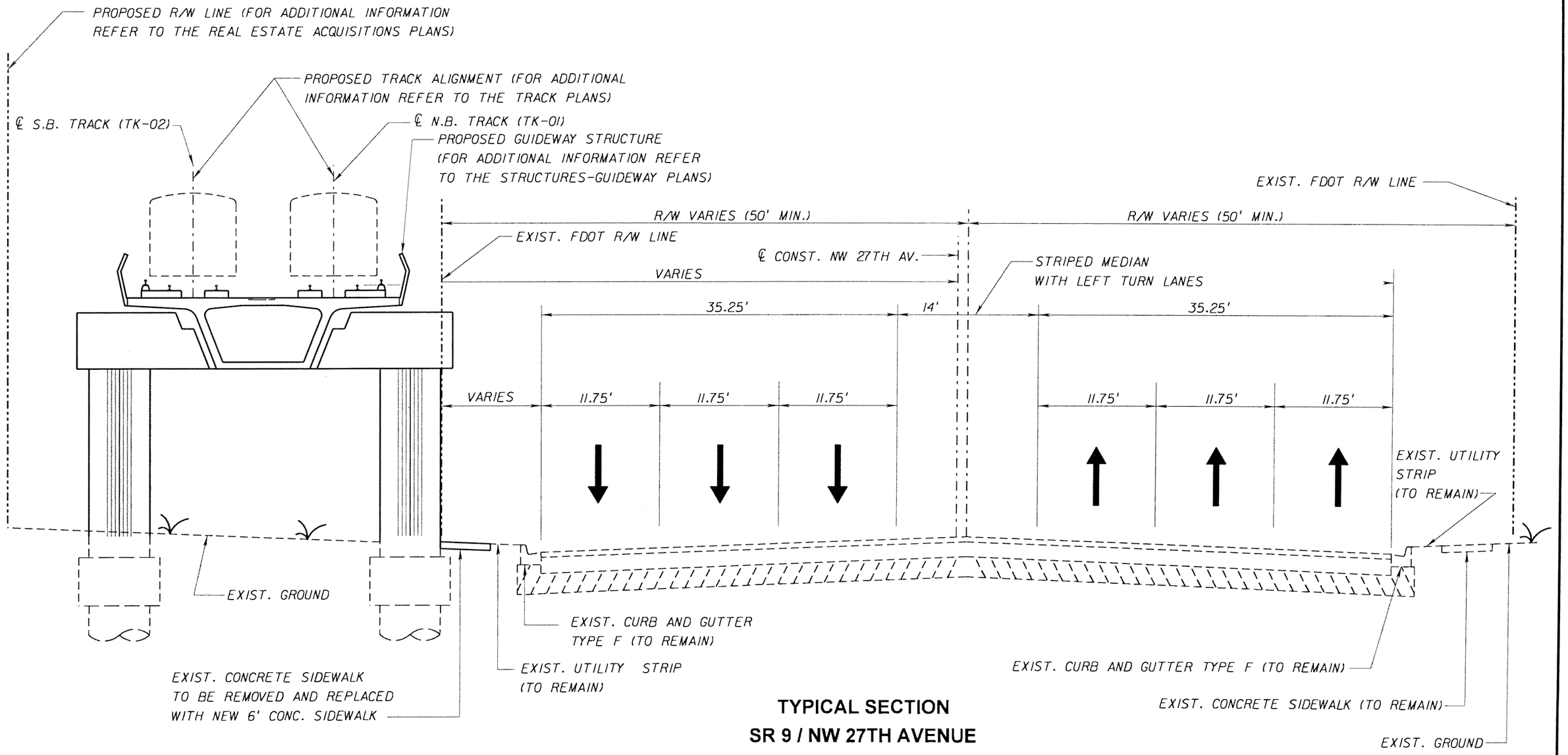

TYPICAL SECTION
SR 9 / NW 27TH AVENUE
STA. 185+70.00 TO STA. 207+63.00

STATIONING REFER TO ℄ N.B. TRACK
UNLESS OTHERWISE NOTED

SUBJECT TO CHANGE

W.L.L. Designed by	05-06 Date					
J.N. Drawn by	05-06 Date					
K.K. Checked by	05-02-06 Date					
M.A.B. Approved by	05-05-06 Date	No.	Date	By / Chk	App.	Revisions

NORTH CORRIDOR METRORAIL EXTENSION - PRELIMINARY ENGINEERING (100% SUBMITTAL)

MIAMI-DADE COUNTY — MIAMI-DADE TRANSIT

PARSONS
7600 CORPORATE CENTER DRIVE, SUITE 500
MIAMI, FLORIDA 33126
PHONE: (786) 464-1000 FAX: (786) 845-7119
CERTIFICATE OF AUTHORIZATION NO. 1838
Approved Date

BND
CIVIL ENGINEERING • ENVIRONMENTAL • AIRPORT • CONSTRUCTION MANAGEMENT • TRANSPORTATION
1200 NW 78 AVENUE, SUITE 400
MIAMI, FLORIDA 33126 - (305) 599-8495
Approved MICHAEL A. BUDALL, P.E. Date

ROADWAY

TYPICAL SECTIONS

Scale N.T.S. | Drawing RWP-08 | Sheet 68

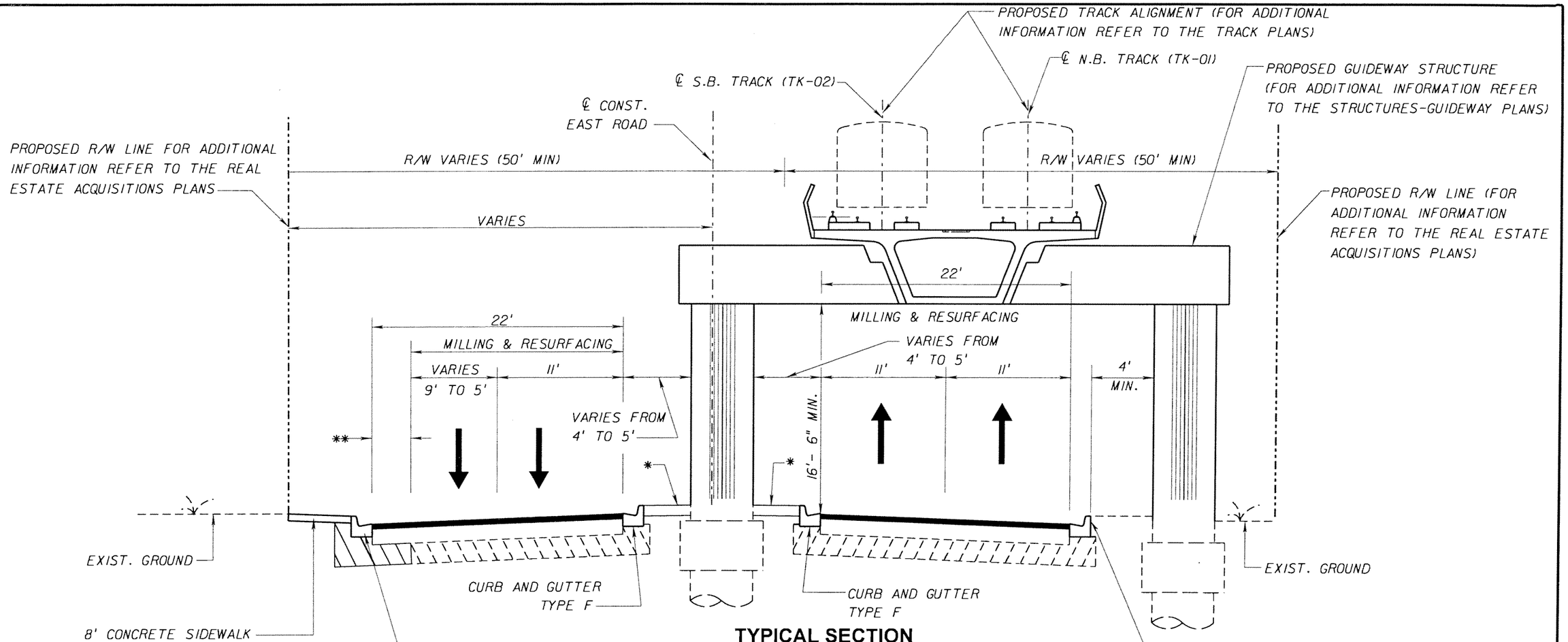

TYPICAL SECTION
EAST ROAD (MDC North Campus)
STA. 224+25.00 TO STA. 225+96.00

MILLING

MILL EXISTING ASPHALT PAVEMENT 2.50" AVG. DEPTH
(2.25" BELOW THE LIP OF GUTTER ON LOW SIDE)

RESURFACING

TYPE SP STRUCTURAL COURSE (TRAFFIC C) (100 LBS/SY 1.00" AVG.)
AND FRICTION COURSE FC 12.5 (160 LBS/SY, 1.50") (RUBBER)

WIDENING

OPTIONAL BASE GROUP II (OPTION B-12.5) WITH
TYPE SP STRUCTURAL COURSE (TRAFFIC C) (100 LBS/SY 1.00" AVG.)
AND FRICTION COURSE FC 12.5 (160 LBS/SY, 1.50") (RUBBER)

* = CONCRETE MEDIAN
** = WIDENING - VARIES FROM 2' TO 6'

STATIONING REFER TO ℄ N.B. TRACK
UNLESS OTHERWISE NOTED

SUBJECT TO CHANGE

W.L.L. Designed by	05-06 Date					
J.N. Drawn by	05-06 Date					
K.K. Checked by	05-02-06 Date					
M.A.B. Approved by	05-05-06 Date	No.	Date	By / Chk	App.	Revisions

NORTH CORRIDOR METRORAIL EXTENSION - PRELIMINARY ENGINEERING (100% SUBMITTAL)

MIAMI-DADE COUNTY — MIAMI-DADE TRANSIT

PARSONS
7600 CORPORATE CENTER DRIVE, SUITE 500
MIAMI, FLORIDA 33126
PHONE: (786) 464-1000 FAX: (786) 845-7119
CERTIFICATE OF AUTHORIZATION NO. 1838
Approved Date

BND
CIVIL ENGINEERING • ENVIRONMENTAL • AIRPORT • CONSTRUCTION MANAGEMENT • TRANSPORTATION
1200 NW 78 AVENUE, SUITE 400
MIAMI, FLORIDA 33126 - (305) 599-8495
Approved MICHAEL A. BUDALL, P.E. Date

ROADWAY

TYPICAL SECTIONS

Scale N.T.S. | Drawing RWP-09 | Sheet 69

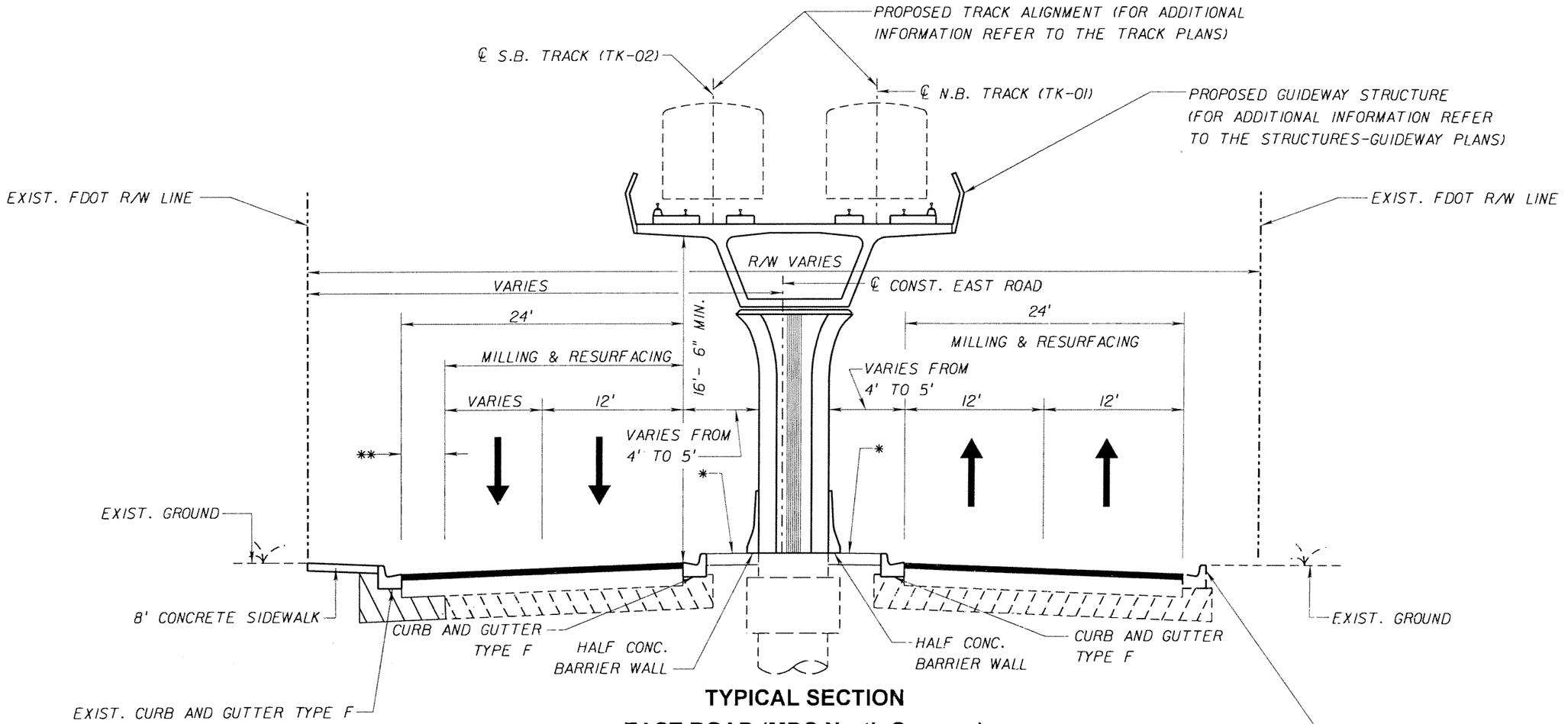

TYPICAL SECTION
EAST ROAD (MDC North Campus)
STA. 225+96.00 TO STA. 230+25.00

MILLING

MILL EXISTING ASPHALT PAVEMENT 2.50" AVG. DEPTH
(2.25" BELOW THE LIP OF GUTTER ON LOW SIDE)

RESURFACING

TYPE SP STRUCTURAL COURSE (TRAFFIC C) (100 LBS/SY 1.00" AVG.)
AND FRICTION COURSE FC 12.5 (160 LBS/SY, 1.50") (RUBBER)

WIDENING

OPTIONAL BASE GROUP II (OPTION B-12.5) WITH
TYPE SP STRUCTURAL COURSE (TRAFFIC C) (100 LBS/SY 1.00" AVG.)
AND FRICTION COURSE FC 12.5 (160 LBS/SY, 1.50") (RUBBER)

* = MEDIAN
** = WIDENING - VARIES FROM 2' TO 6'

STATIONING REFER TO ℄ N.B. TRACK
UNLESS OTHERWISE NOTED

SUBJECT TO CHANGE

W.L.L. Designed by	05-06 Date					
J.N. Drawn by	05-06 Date					
K.K. Checked by	05-02-06 Date					
M.A.B. Approved by	05-05-06 Date	No.	Date	By / Chk	App.	Revisions

NORTH CORRIDOR METRORAIL EXTENSION - PRELIMINARY ENGINEERING (100% SUBMITTAL)

MIAMI-DADE COUNTY — MIAMI-DADE TRANSIT

PARSONS
7600 CORPORATE CENTER DRIVE, SUITE 500
MIAMI, FLORIDA 33126
PHONE: (786) 464-1000 FAX: (786) 845-7116
CERTIFICATE OF AUTHORIZATION NO. 1838

Approved ____ Date ____

BND
CIVIL ENGINEERING • ENVIRONMENTAL • AIRPORT • CONSTRUCTION MANAGEMENT • TRANSPORTATION
1200 NW 78 AVENUE, SUITE 400
MIAMI, FLORIDA 33126 - (305) 599-8495

Approved MICHAEL A. BUDALL, P.E. Date 5/8/2006

ROADWAY

TYPICAL SECTIONS

Scale N.T.S. | Drawing RWP-10 | Sheet 10

6:46:42 PM 7/3/2006

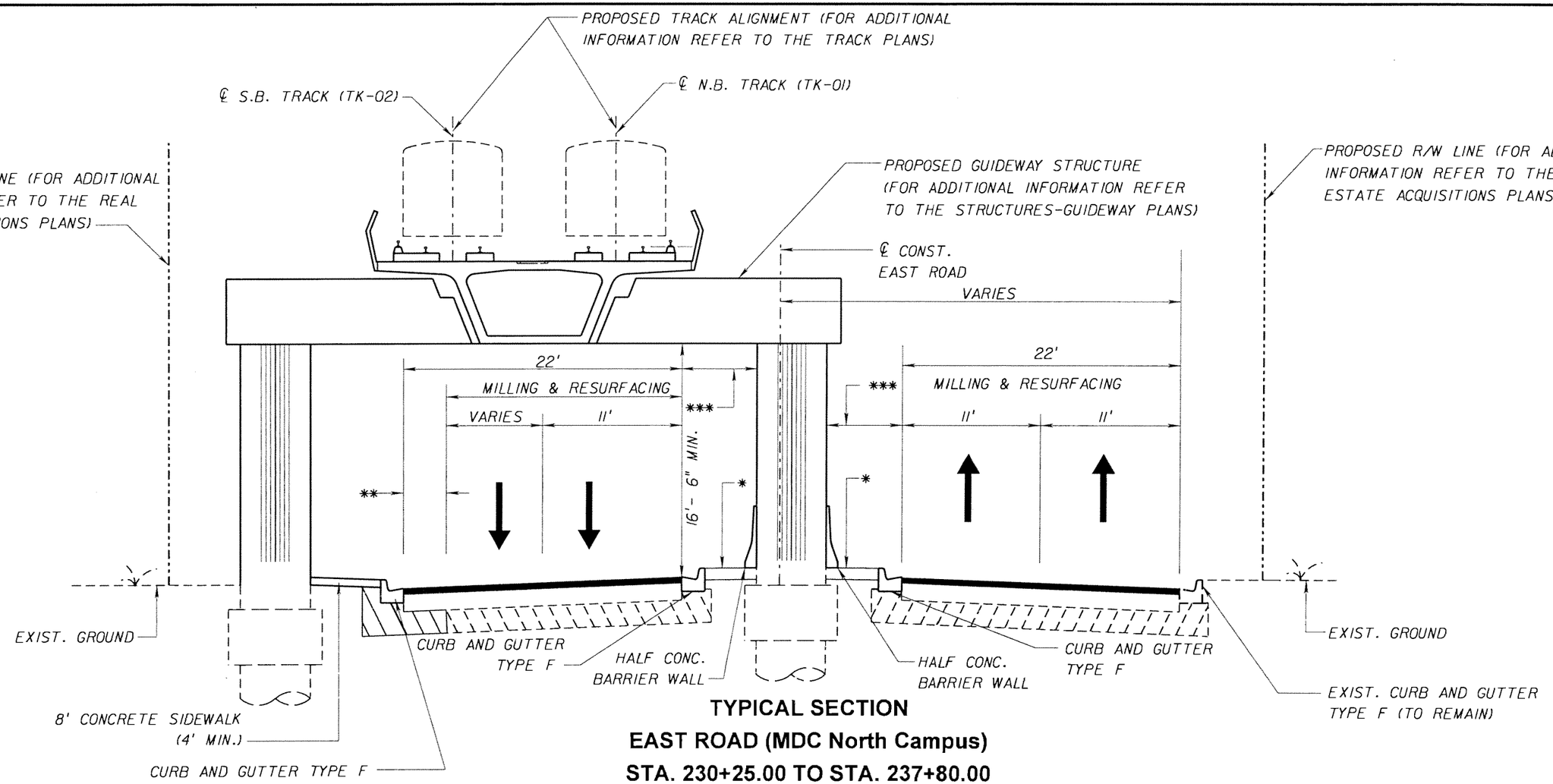

TYPICAL SECTION
EAST ROAD (MDC North Campus)
STA. 230+25.00 TO STA. 237+80.00

MILLING

MILL EXISTING ASPHALT PAVEMENT 2.50" AVG. DEPTH
(2.25" BELOW THE LIP OF GUTTER ON LOW SIDE)

RESURFACING

TYPE SP STRUCTURAL COURSE (TRAFFIC C) (100 LBS/SY 1.00" AVG.)
AND FRICTION COURSE FC 12.5 (160 LBS/SY, 1.50") (RUBBER)

WIDENING

OPTIONAL BASE GROUP II (OPTION B-12.5) WITH
TYPE SP STRUCTURAL COURSE (TRAFFIC C) (100 LBS/SY 1.00" AVG.)
AND FRICTION COURSE FC 12.5 (160 LBS/SY, 1.50") (RUBBER)

* = CONCRETE
** = WIDENING - VARIES FROM 2' TO 6'
*** = VARIES FROM 4' TO 5'

STATIONING REFER TO ℄ N.B. TRACK
UNLESS OTHERWISE NOTED

SUBJECT TO CHANGE

W.L.L. Designed by	05-06 Date					
J.N. Drawn by	05-06 Date					
K.K. Checked by	05-02-06 Date					
M.A.B. Approved by	05-05-06 Date	No.	Date	By / Chk	App.	Revisions

NORTH CORRIDOR METRORAIL EXTENSION - PRELIMINARY ENGINEERING (100% SUBMITTAL)

MIAMI-DADE COUNTY — MIAMI-DADE TRANSIT

PARSONS
7600 CORPORATE CENTER DRIVE, SUITE 500
MIAMI, FLORIDA 33126
PHONE: (786) 464-1000 FAX: (786) 845-7119
CERTIFICATE OF AUTHORIZATION NO. 1636
Approved Date

BND
CIVIL ENGINEERING • ENVIRONMENTAL • AIRPORT • CONSTRUCTION MANAGEMENT • TRANSPORTATION
1200 NW 78 AVENUE, SUITE 400
MIAMI, FLORIDA 33126 - (305) 599-8495
Approved MICHAEL A. BUDALL, P.E. Date

ROADWAY

TYPICAL SECTIONS

Scale N.T.S. | Drawing RWP-11 | Sheet 11

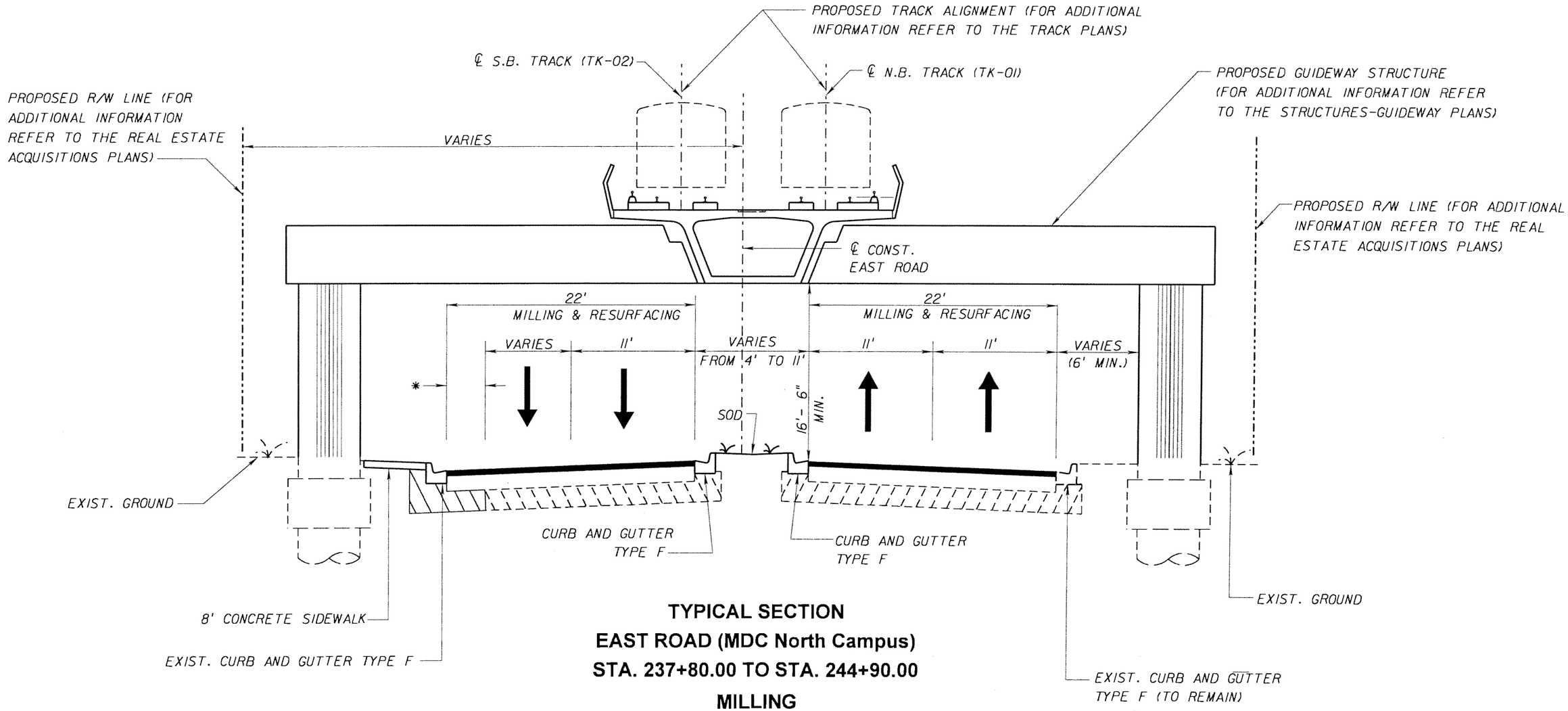

TYPICAL SECTION
EAST ROAD (MDC North Campus)
STA. 237+80.00 TO STA. 244+90.00

MILLING

MILL EXISTING ASPHALT PAVEMENT 2.50" AVG. DEPTH
(2.25" BELOW THE LIP OF GUTTER ON LOW SIDE)

RESURFACING

TYPE SP STRUCTURAL COURSE (TRAFFIC C) (100 LBS/SY 1.00" AVG.)
AND FRICTION COURSE FC 12.5 (160 LBS/SY, 1.50") (RUBBER)

WIDENING

OPTIONAL BASE GROUP II (OPTION B-12.5) WITH
TYPE SP STRUCTURAL COURSE (TRAFFIC C) (100 LBS/SY 1.00" AVG.)
AND FRICTION COURSE FC 12.5 (160 LBS/SY, 1.50") (RUBBER)

* = WIDENING - VARIES FROM 2' TO 6'

STATIONING REFER TO ℄ N.B. TRACK
UNLESS OTHERWISE NOTED

SUBJECT TO CHANGE

W.L.L. Designed by	05-06 Date						
J.N. Drawn by	05-06 Date						
K.K. Checked by	05-02-06 Date						
M.A.B. Approved by	05-05-06 Date	No.	Date	By / Chk.	App.	Revisions	

NORTH CORRIDOR METRORAIL EXTENSION - PRELIMINARY ENGINEERING (100% SUBMITTAL)

MIAMI-DADE COUNTY — MIAMI-DADE TRANSIT

PARSONS
7600 CORPORATE CENTER DRIVE, SUITE 500
MIAMI, FLORIDA 33126
PHONE: (786) 464-1000 FAX: (786) 845-7119
CERTIFICATE OF AUTHORIZATION NO. 1638
Approved ____ Date ____

BND
CIVIL ENGINEERING • ENVIRONMENTAL • AIRPORT • CONSTRUCTION MANAGEMENT • TRANSPORTATION
1200 NW 78 AVENUE, SUITE 400
MIAMI, FLORIDA 33126 - (305) 599-8495
Approved MICHAEL A. BUDALL, P.E. Date ____

ROADWAY

TYPICAL SECTIONS

Scale N.T.S. | Drawing RWP-12 | Sheet 12

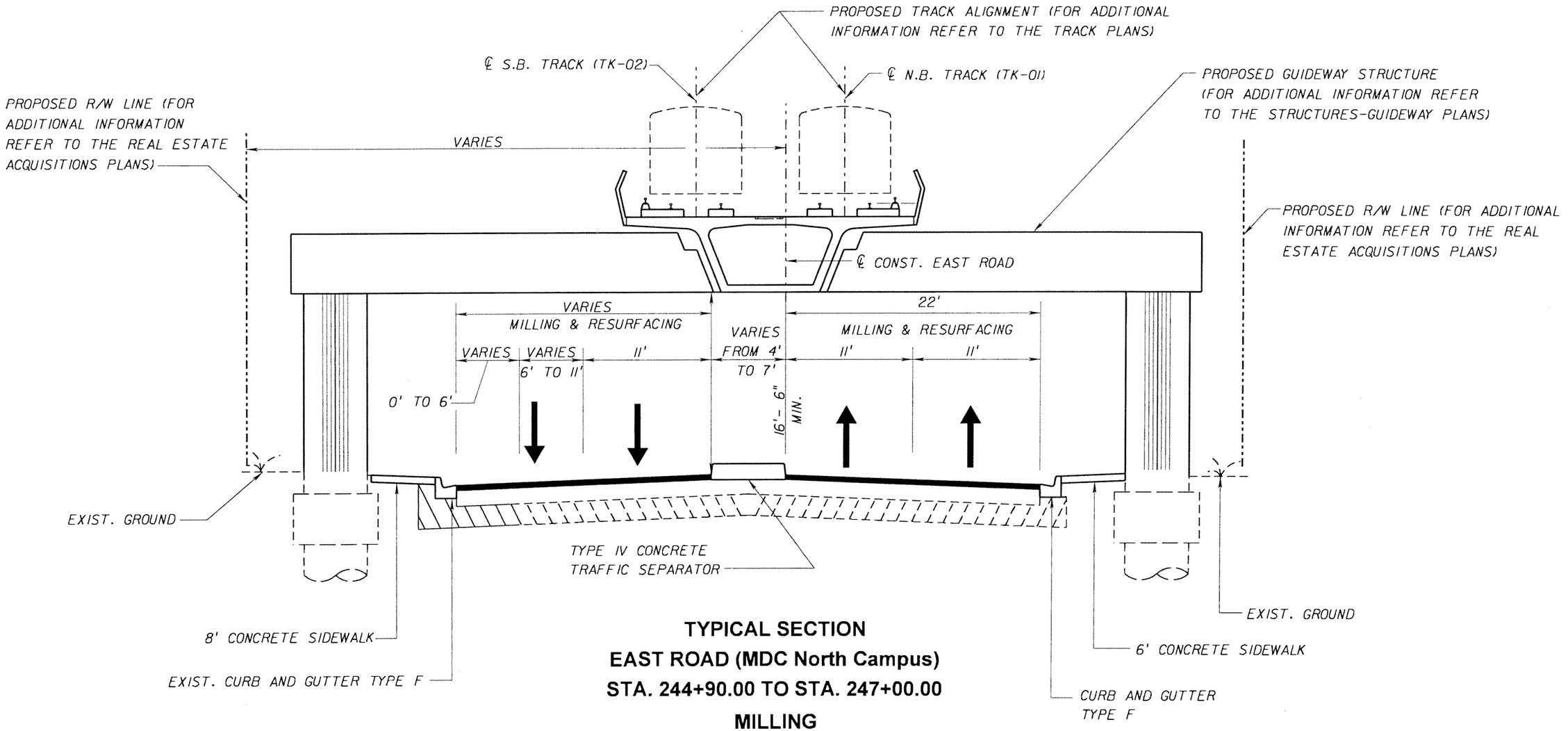

TYPICAL SECTION
EAST ROAD (MDC North Campus)
STA. 244+90.00 TO STA. 247+00.00

MILLING

MILL EXISTING ASPHALT PAVEMENT 2.50" AVG. DEPTH
(2.25" BELOW THE LIP OF GUTTER ON LOW SIDE)

RESURFACING

TYPE SP STRUCTURAL COURSE (TRAFFIC C) (100 LBS/SY 1.00" AVG.)
AND FRICTION COURSE FC 12.5 (160 LBS/SY, 1.50") (RUBBER)

WIDENING

OPTIONAL BASE GROUP II (OPTION B-12.5) WITH
TYPE SP STRUCTURAL COURSE (TRAFFIC C) (100 LBS/SY 1.00" AVG.)
AND FRICTION COURSE FC 12.5 (160 LBS/SY, 1.50") (RUBBER)

* = WIDENING - VARIES FROM 2' TO 6'

STATIONING REFER TO ℄ N.B. TRACK
UNLESS OTHERWISE NOTED

SUBJECT TO CHANGE

W.L.L. Designed by	05-06 Date					
J.N. Drawn by	05-06 Date					
K.K. Checked by	05-02-06 Date					
M.A.B. Approved by	05-05-06 Date	No.	Date	By / Chk	App.	Revisions

NORTH CORRIDOR METRORAIL EXTENSION - PRELIMINARY ENGINEERING (100% SUBMITTAL)

MIAMI-DADE COUNTY — MIAMI-DADE TRANSIT

PARSONS
7600 CORPORATE CENTER DRIVE, SUITE 500
MIAMI, FLORIDA 33126
PHONE: (786) 464-1000 FAX: (786) 845-7119
CERTIFICATE OF AUTHORIZATION NO. 1838
Approved Date

BND
CIVIL ENGINEERING • ENVIRONMENTAL • AIRPORT • CONSTRUCTION MANAGEMENT • TRANSPORTATION
1200 NW 78 AVENUE, SUITE 400
MIAMI, FLORIDA 33126 - (305) 599-8495
Approved MICHAEL A. BUDALL, P.E. Date

ROADWAY

TYPICAL SECTIONS

Scale N.T.S. | Drawing RWP-13 | Sheet 13

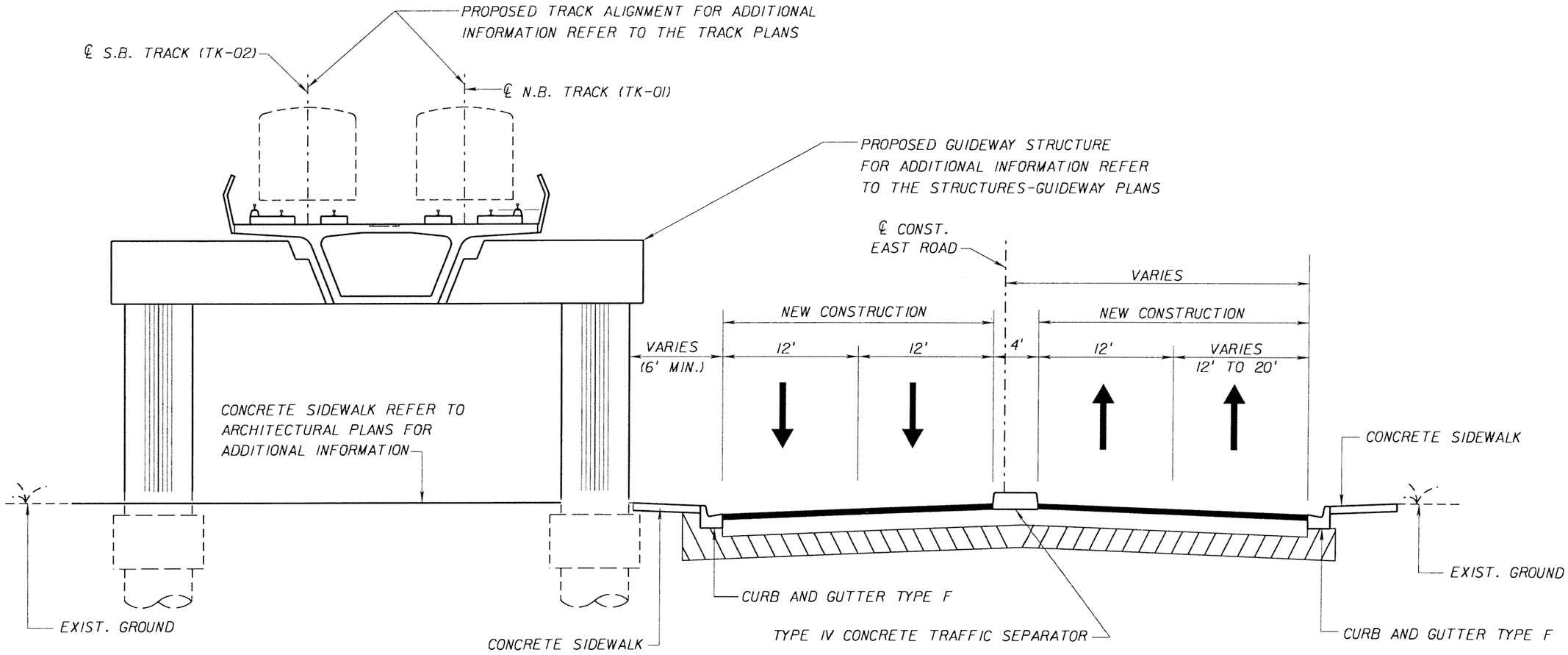

TYPICAL SECTION
EAST ROAD (MDC North Campus)
STA. 247+00.00 TO STA. 253+90.00

NEW CONSTRUCTION

OPTIONAL BASE GROUP 9, TYPE B-12.5 (6") ONLY, WITH TYPE SP STRUCTURAL COURSE (TRAFFIC C) (3") AND FRICTION COURSE FC-12.5 (1 1/2") (RUBBER)

STATIONING REFER TO ℄ N.B. TRACK UNLESS OTHERWISE NOTED

SUBJECT TO CHANGE

W.L.L. 05-06 Designed by Date						
J.N. 05-06 Drawn by Date						
K.K. 05-02-06 Checked by Date						
M.A.B. 05-05-06 Approved by Date	No.	Date	By / Chk	App.	Revisions	

NORTH CORRIDOR METRORAIL EXTENSION - PRELIMINARY ENGINEERING (100% SUBMITTAL)

MIAMI-DADE COUNTY — MIAMI-DADE TRANSIT

PARSONS
7600 CORPORATE CENTER DRIVE, SUITE 500
MIAMI, FLORIDA 33126
PHONE: (786) 464-1000 FAX: (786) 845-7119
CERTIFICATE OF AUTHORIZATION NO. 1838
Approved Date

BND
CIVIL ENGINEERING • ENVIRONMENTAL • AIRPORT • CONSTRUCTION MANAGEMENT • TRANSPORTATION
1200 NW 78 AVENUE, SUITE 400
MIAMI, FLORIDA 33126 - (305) 599-8495
Approved MICHAEL A. BUDALL, P.E. Date

ROADWAY

TYPICAL SECTIONS

Scale N.T.S. | Drawing RWP-14 | Sheet 74

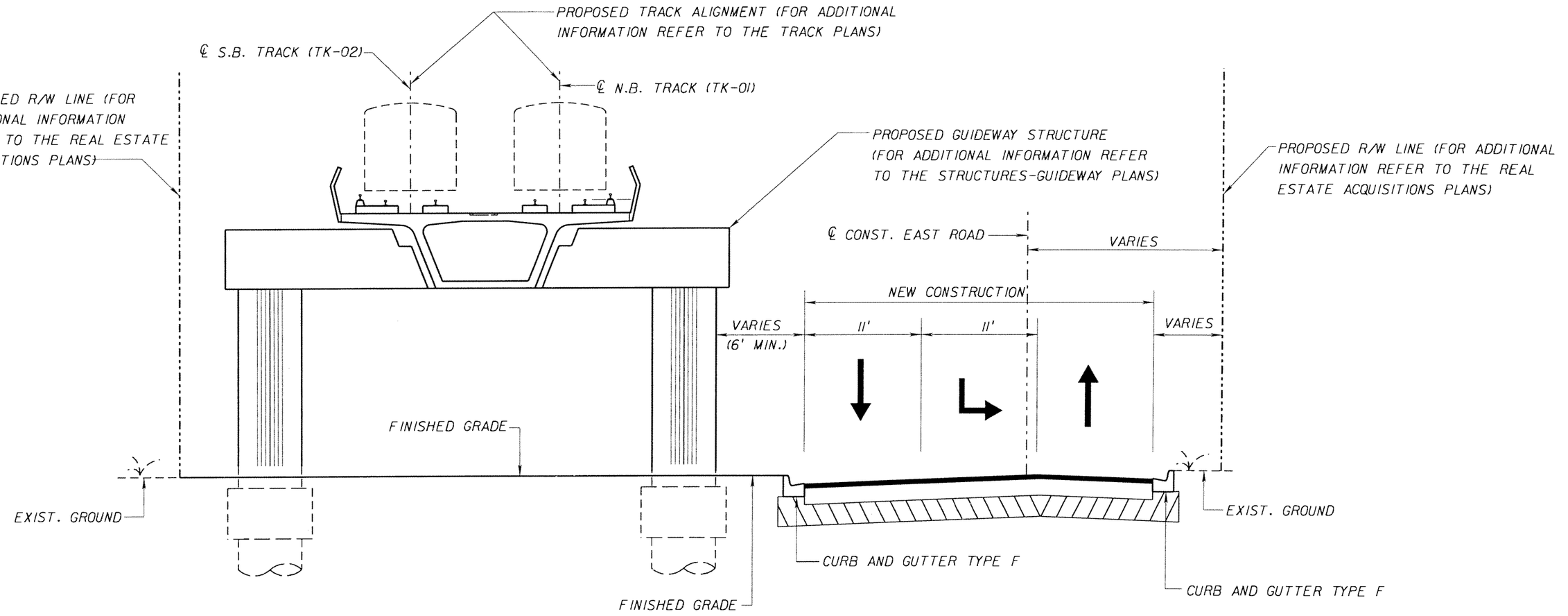

TYPICAL SECTION
NW 27TH PLACE / NW 120TH TERRACE
STA. 255+35.00 TO STA. 259+20.00

NEW CONSTRUCTION

OPTIONAL BASE GROUP 9, TYPE B-12.5 (6") ONLY, WITH
TYPE SP STRUCTURAL COURSE (TRAFFIC C) (3")
AND FRICTION COURSE FC-12.5 (1 ½") (RUBBER)

STATIONING REFER TO ℄ N.B. TRACK
UNLESS OTHERWISE NOTED

SUBJECT TO CHANGE

W.L.L. 05-06 Designed by Date						
J.N. 05-06 Drawn by Date						
K.K. 05-02-06 Checked by Date						
M.A.B. 05-05-06 Approved by Date	No.	Date	By / Chk.	App.	Revisions	

NORTH CORRIDOR METRORAIL EXTENSION - PRELIMINARY ENGINEERING (100% SUBMITTAL)

MIAMI-DADE COUNTY — MIAMI-DADE TRANSIT

PARSONS
7600 CORPORATE CENTER DRIVE, SUITE 500
MIAMI, FLORIDA 33126
PHONE: (786) 464-1000 FAX: (786) 845-7119
CERTIFICATE OF AUTHORIZATION NO. 1838
Approved Date

BND
CIVIL ENGINEERING • ENVIRONMENTAL • AIRPORT • CONSTRUCTION MANAGEMENT • TRANSPORTATION
1200 NW 78 AVENUE, SUITE 400
MIAMI, FLORIDA 33126 - (305) 599-8495
Approved MICHAEL A. BUDALL, P.E. Date

ROADWAY

TYPICAL SECTIONS

Scale N.T.S. | Drawing RWP-15 | Sheet 75

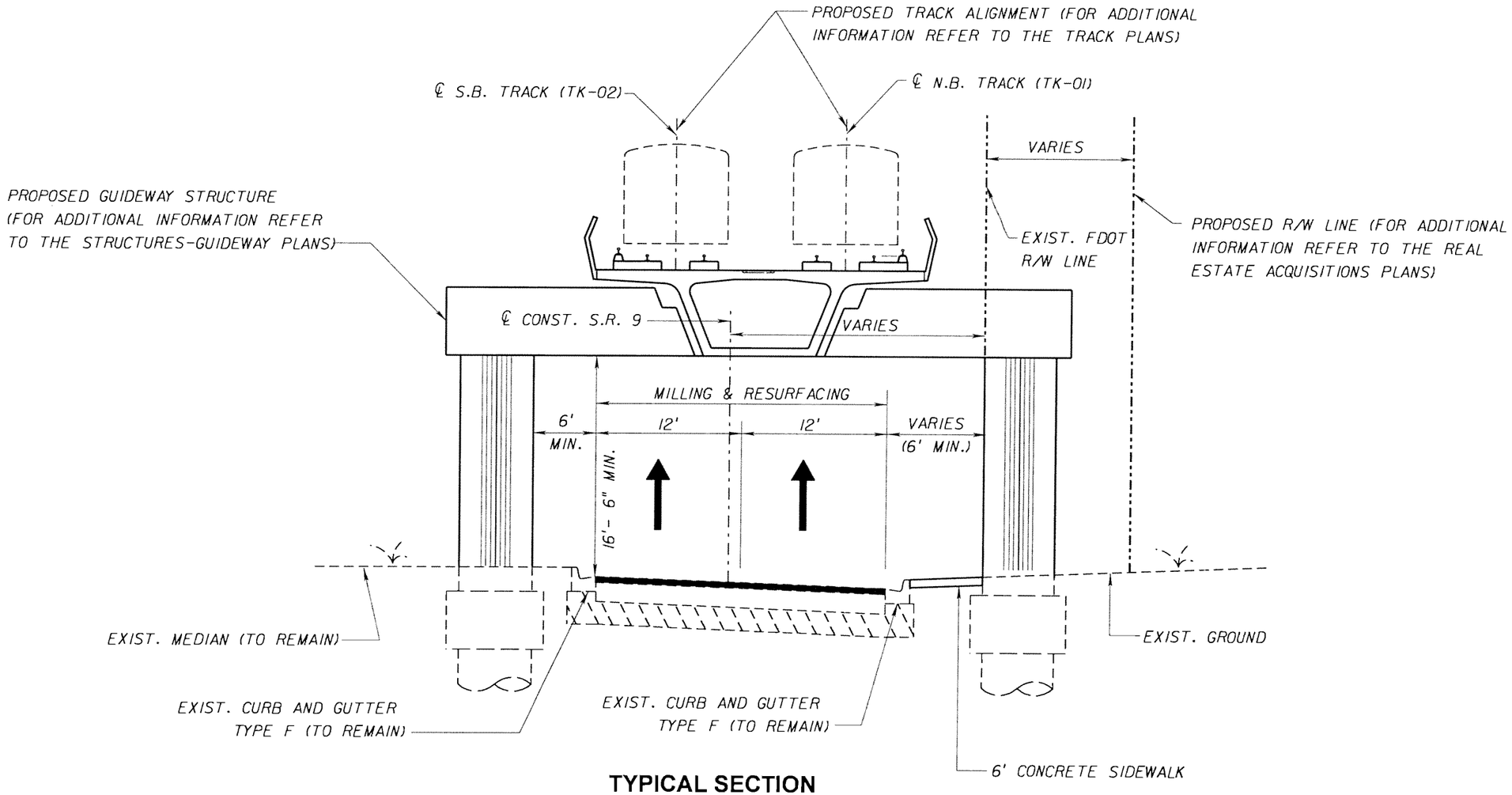

TYPICAL SECTION
SR 9 / NW 27TH AVENUE (NORTHBOUND)
STA. 324+14.00 TO 325+45.00

MILLING

MILL EXISTING ASPHALT PAVEMENT 2.50" AVG. DEPTH
(2.25" BELOW THE LIP OF GUTTER ON LOW SIDE)

RESURFACING

TYPE SP STRUCTURAL COURSE (TRAFFIC C) (100 LBS/SY 1.00" AVG.)
AND FRICTION COURSE FC 12.5 (160 LBS/SY, 1.50") (RUBBER)

STATIONING REFER TO ℄ N.B. TRACK
UNLESS OTHERWISE NOTED

SUBJECT TO CHANGE

W.L.L. 05-06 Designed by Date					
J.N. 05-06 Drawn by Date					
K.K. 05-02-06 Checked by Date					
M.A.B. 05-05-06 Approved by Date	No.	Date	By / Chk	App.	Revisions

NORTH CORRIDOR METRORAIL EXTENSION - PRELIMINARY ENGINEERING (100% SUBMITTAL)

MIAMI-DADE COUNTY

MIAMI-DADE TRANSIT

PARSONS
7600 CORPORATE CENTER DRIVE, SUITE 500
MIAMI, FLORIDA 33126
PHONE: (786) 464-1000 FAX: (786) 845-7119
CERTIFICATE OF AUTHORIZATION NO. 1838

Approved Date

BND
CIVIL ENGINEERING • ENVIRONMENTAL • AIRPORT • CONSTRUCTION MANAGEMENT • TRANSPORTATION
1200 NW 78 AVENUE, SUITE 400
MIAMI, FLORIDA 33126 - (305) 599-8495

Approved MICHAEL A. BUDALL, P.E. Date

ROADWAY

TYPICAL SECTIONS

Scale N.T.S. | Drawing RWP-16 | Sheet 76

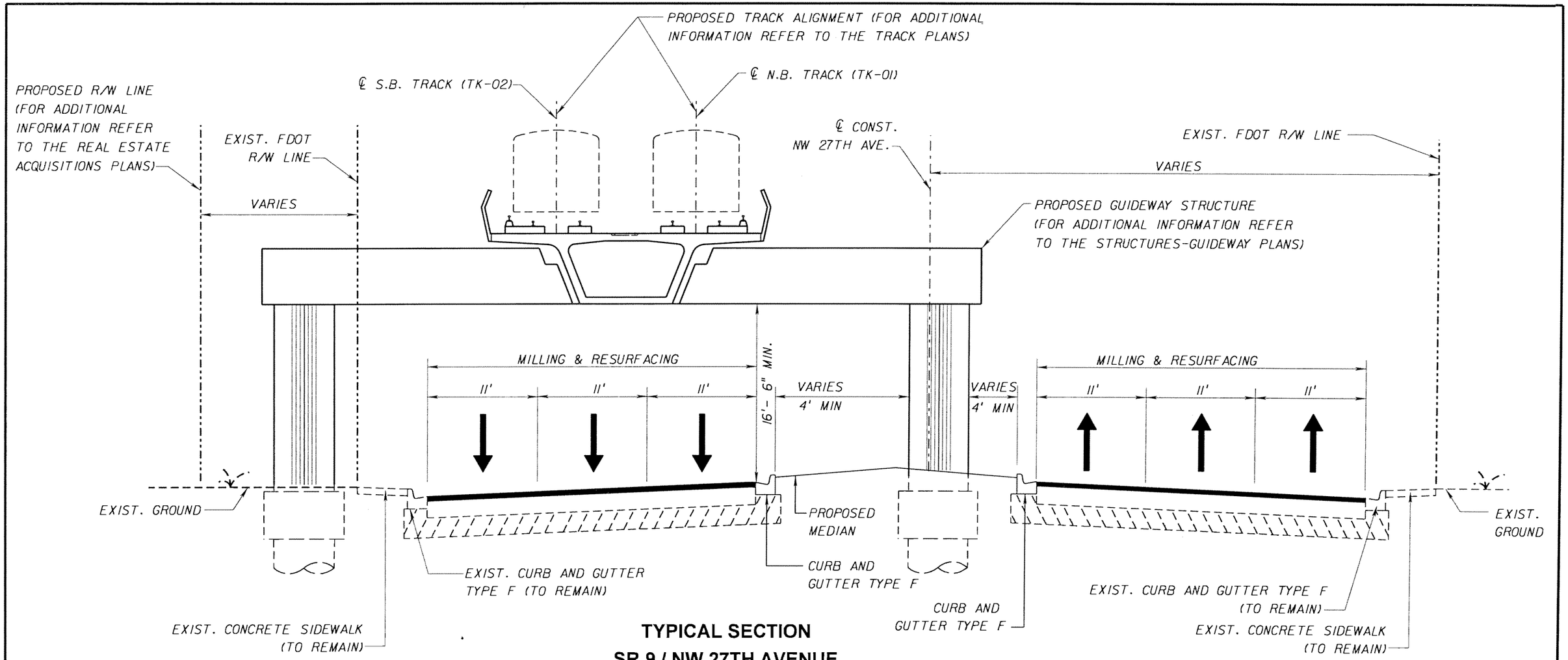

TYPICAL SECTION
SR 9 / NW 27TH AVENUE
STA. 294+86.00 TO 296+51.00
STA. 474+00.00 TO STA. 475+21.00

MILLING

MILL EXISTING ASPHALT PAVEMENT 2.50" AVG. DEPTH
(2.25" BELOW THE LIP OF GUTTER ON LOW SIDE)

RESURFACING

TYPE SP STRUCTURAL COURSE (TRAFFIC C) (100 LBS/SY 1.00" AVG.)
AND FRICTION COURSE FC 12.5 (160 LBS/SY, 1.50") (RUBBER)

STATIONING REFER TO ℄ N.B. TRACK
UNLESS OTHERWISE NOTED

SUBJECT TO CHANGE

W.L.L. Designed by	05-06 Date						
J.N. Drawn by	05-06 Date						
K.K. Checked by	05-02-06 Date						
M.A.B. Approved by	05-05-06 Date	No.	Date	By / Chk	App.	Revisions	

NORTH CORRIDOR METRORAIL EXTENSION - PRELIMINARY ENGINEERING (100% SUBMITTAL)

MIAMI-DADE COUNTY — MIAMI-DADE TRANSIT

PARSONS
7600 CORPORATE CENTER DRIVE, SUITE 500
MIAMI, FLORIDA 33126
PHONE: (786) 464-1000 FAX: (786) 845-7119
CERTIFICATE OF AUTHORIZATION NO. 1838

Approved ____ Date ____

BND
CIVIL ENGINEERING • ENVIRONMENTAL • AIRPORT • CONSTRUCTION MANAGEMENT • TRANSPORTATION
1200 NW 78 AVENUE, SUITE 400
MIAMI, FLORIDA 33126 - (305) 599-8495

Approved MICHAEL A. BUDALL, P.E. Date ____

ROADWAY

TYPICAL SECTIONS

Scale N.T.S. | Drawing RWP-17 | Sheet 17

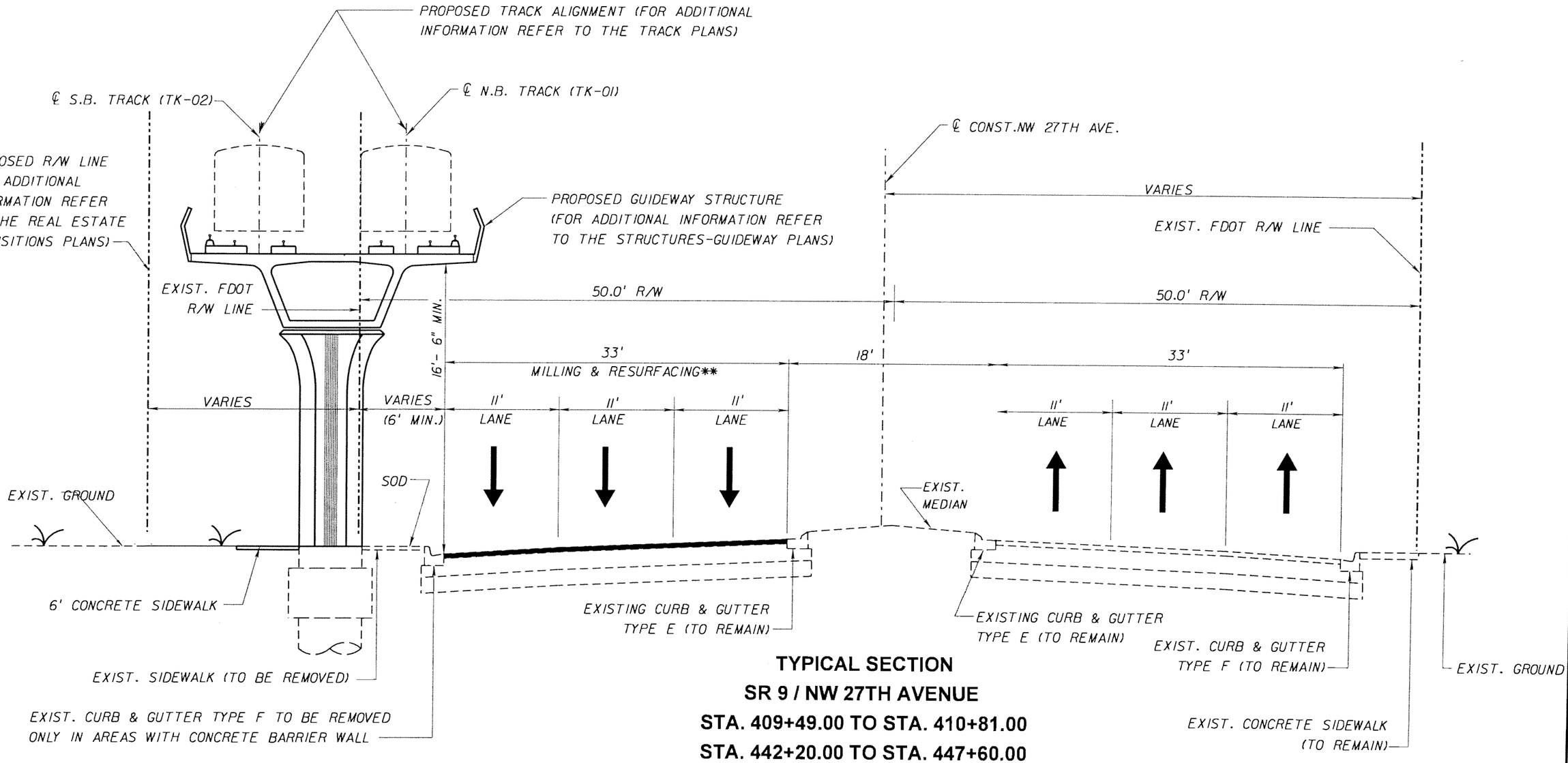

TYPICAL SECTION
SR 9 / NW 27TH AVENUE
STA. 409+49.00 TO STA. 410+81.00
STA. 442+20.00 TO STA. 447+60.00

MILLING

MILL EXISTING ASPHALT PAVEMENT 2.50" AVG. DEPTH (2.25" BELOW THE LIP OF GUTTER ON LOW SIDE)

RESURFACING

TYPE SP STRUCTURAL COURSE (TRAFFIC C) (100 LBS/SY 1.00" AVG.) AND FRICTION COURSE FC 12.5 (160 LBS/SY, 1.50") (RUBBER)

** = MILLING & RESURFACING FROM STA. 438+00.00 TO STA. 443+00.00 & STA. 468+86.00 TO STA. 470+22.00

STATIONING REFER TO ℄ N.B. TRACK UNLESS OTHERWISE NOTED

SUBJECT TO CHANGE

W.L.L. Designed by	05-06 Date					
J.N. Drawn by	05-06 Date					
K.K. Checked by	05-02-06 Date					
M.A.B. Approved by	05-05-06 Date	No.	Date	By / Chk.	App.	Revisions

NORTH CORRIDOR METRORAIL EXTENSION - PRELIMINARY ENGINEERING (100% SUBMITTAL)

MIAMI-DADE COUNTY — MIAMI-DADE TRANSIT

PARSONS
7600 CORPORATE CENTER DRIVE, SUITE 500
MIAMI, FLORIDA 33126
PHONE: (786) 464-1000 FAX: (786) 845-7119
CERTIFICATE OF AUTHORIZATION NO. 1838
Approved ____ Date ____

BND
CIVIL ENGINEERING • ENVIRONMENTAL • AIRPORT • CONSTRUCTION MANAGEMENT • TRANSPORTATION
1200 NW 78 AVENUE, SUITE 400
MIAMI, FLORIDA 33126 - (305) 599-8495
Approved MICHAEL A. BUDALL, P.E. Date ____

ROADWAY

TYPICAL SECTIONS

Scale N.T.S. | Drawing RWP-18 | Sheet 18

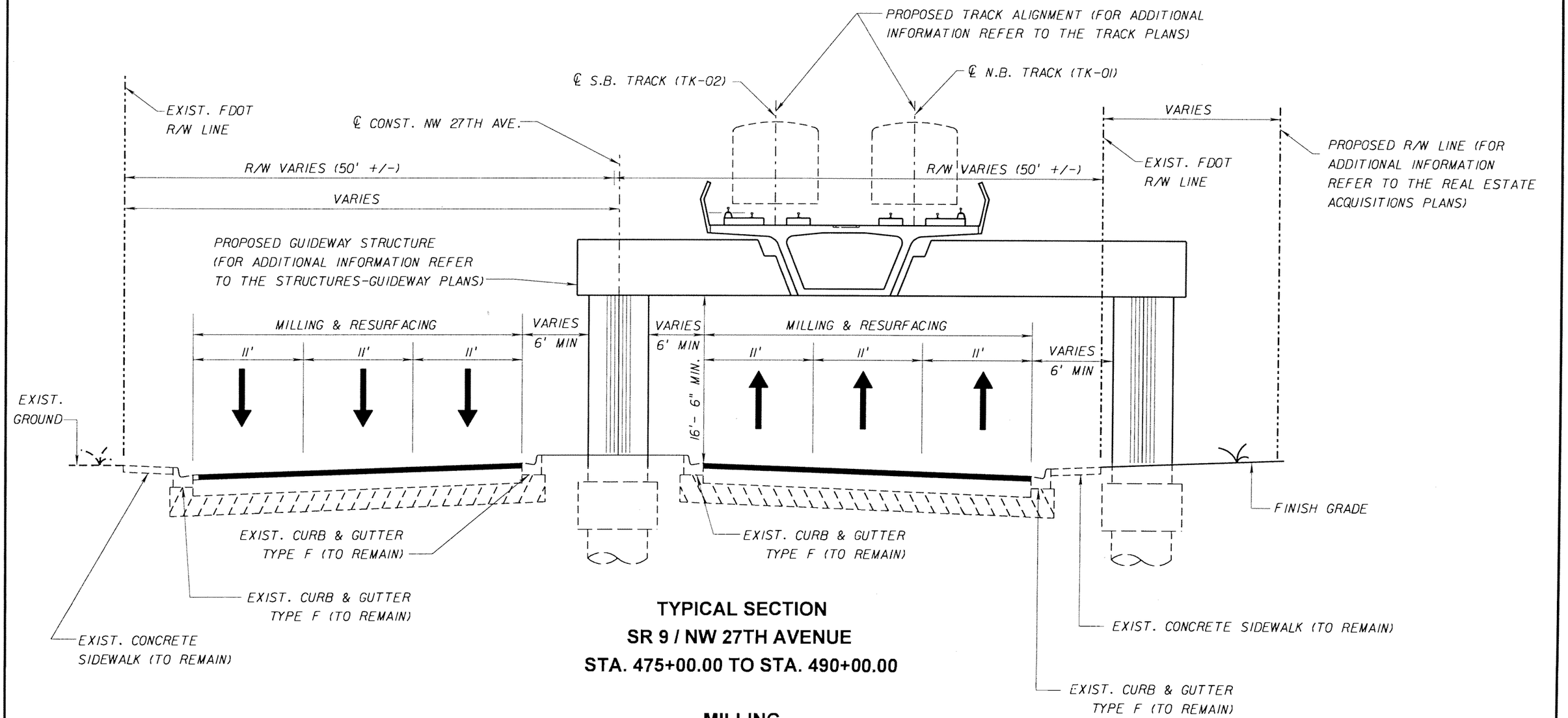

TYPICAL SECTION
SR 9 / NW 27TH AVENUE
STA. 475+00.00 TO STA. 490+00.00

MILLING

MILL EXISTING ASPHALT PAVEMENT 2.50" AVG. DEPTH
(2.25" BELOW THE LIP OF GUTTER ON LOW SIDE)

RESURFACING

TYPE SP STRUCTURAL COURSE (TRAFFIC C) (100 LBS/SY 1.00" AVG.)
AND FRICTION COURSE FC 12.5 (160 LBS/SY, 1.50") (RUBBER)

STATIONING REFER TO ℄ N.B. TRACK
UNLESS OTHERWISE NOTED

SUBJECT TO CHANGE

W.L.L. Designed by	05-06 Date					
J.N. Drawn by	05-06 Date					
K.K. Checked by	05-02-06 Date					
M.A.B. Approved by	05-05-06 Date	No.	Date	By / Chk	App.	Revisions

NORTH CORRIDOR METRORAIL EXTENSION - PRELIMINARY ENGINEERING (100% SUBMITTAL)

MIAMI-DADE COUNTY — MIAMI-DADE TRANSIT

PARSONS
7600 CORPORATE CENTER DRIVE, SUITE 500
MIAMI, FLORIDA 33126
PHONE: (786) 464-1000 FAX: (786) 845-7119
CERTIFICATE OF AUTHORIZATION NO. 1838
Approved Date

BND
CIVIL ENGINEERING • ENVIRONMENTAL • AIRPORT • CONSTRUCTION MANAGEMENT • TRANSPORTATION
1200 NW 78 AVENUE, SUITE 400
MIAMI, FLORIDA 33126 - (305) 599-8495
Approved MICHAEL A. BUDALL, P.E. Date

ROADWAY

TYPICAL SECTIONS

Scale N.T.S. | Drawing RWP-19 | Sheet 19

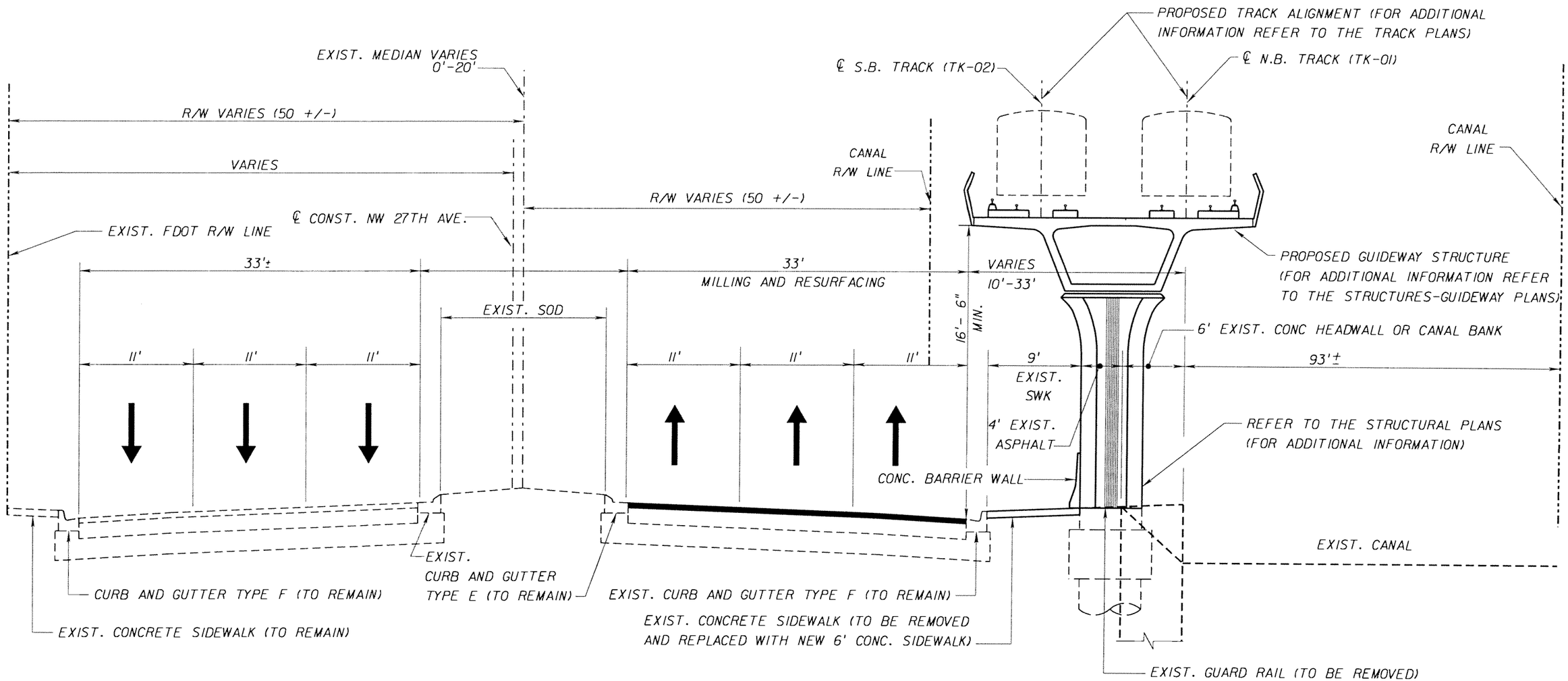

TYPICAL SECTION
SR 817 (NW27TH AVE)
STA. 536+55.00 TO STA. 552+25.00

MILLING

MILL EXISTING ASPHALT PAVEMENT 2.50" AVG. DEPTH (2.25" BELOW THE LIP OF GUTTER ON LOW SIDE)

RESURFACING

TYPE SP STRUCTURAL COURSE (TRAFFIC C) (100 LBS/SY 1.00" AVG.) AND FRICTION COURSE FC 12.5 (160 LBS/SY, 1.50") (RUBBER)

STATIONING REFER TO ℄ N.B. TRACK UNLESS OTHERWISE NOTED

SUBJECT TO CHANGE

W.L.L. Designed by	05-06 Date					
J.N. Drawn by	05-06 Date					
K.K. Checked by	05-02-06 Date					
M.A.B. Approved by	05-05-06 Date	No.	Date	By / Chk	App.	Revisions

NORTH CORRIDOR METRORAIL EXTENSION - PRELIMINARY ENGINEERING (100% SUBMITTAL)

MIAMI-DADE COUNTY — MIAMI-DADE TRANSIT

PARSONS
7600 CORPORATE CENTER DRIVE, SUITE 500
MIAMI, FLORIDA 33126
PHONE: (786) 464-1000 FAX: (786) 845-7119
CERTIFICATE OF AUTHORIZATION NO. 1838
Approved Date

BND
CIVIL ENGINEERING • ENVIRONMENTAL • AIRPORT • CONSTRUCTION MANAGEMENT • TRANSPORTATION
1200 NW 78 AVENUE, SUITE 400
MIAMI, FLORIDA 33126 - (305) 599-8495
Approved MICHAEL A. BUDALL, P.E. Date

ROADWAY

TYPICAL SECTIONS

Scale N.T.S. | Drawing RWP-20 | Sheet 80

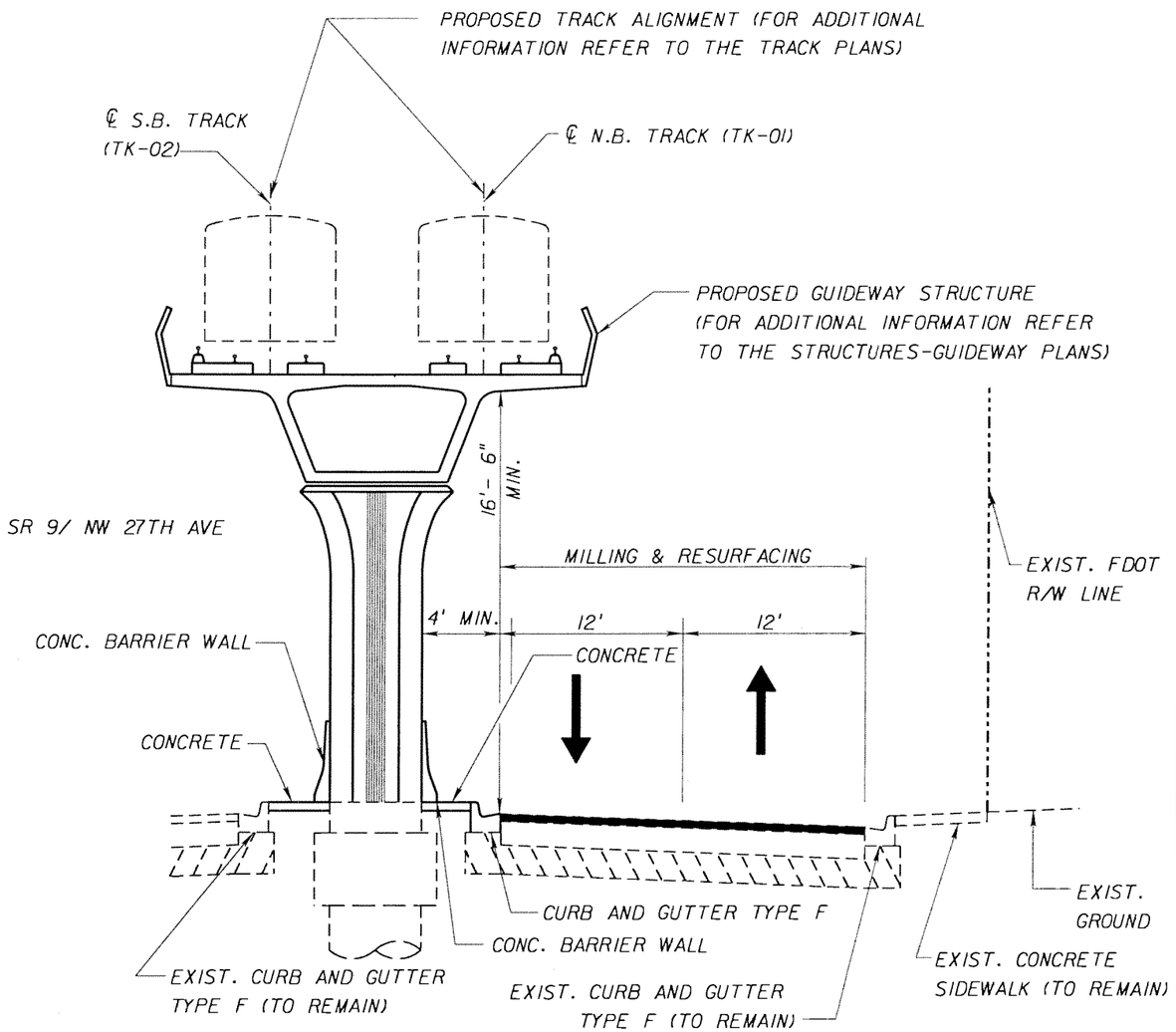

TYPICAL SECTION
FRONTAGE ROAD (NORTHBOUND)

MILLING

MILL EXISTING ASPHALT PAVEMENT 2.50" AVG. DEPTH
(2.25" BELOW THE LIP OF GUTTER ON LOW SIDE)

RESURFACING

TYPE SP STRUCTURAL COURSE (TRAFFIC C) (100 LBS/SY 1.00" AVG.)
AND FRICTION COURSE FC 12.5 (160 LBS/SY, 1.50") (RUBBER)

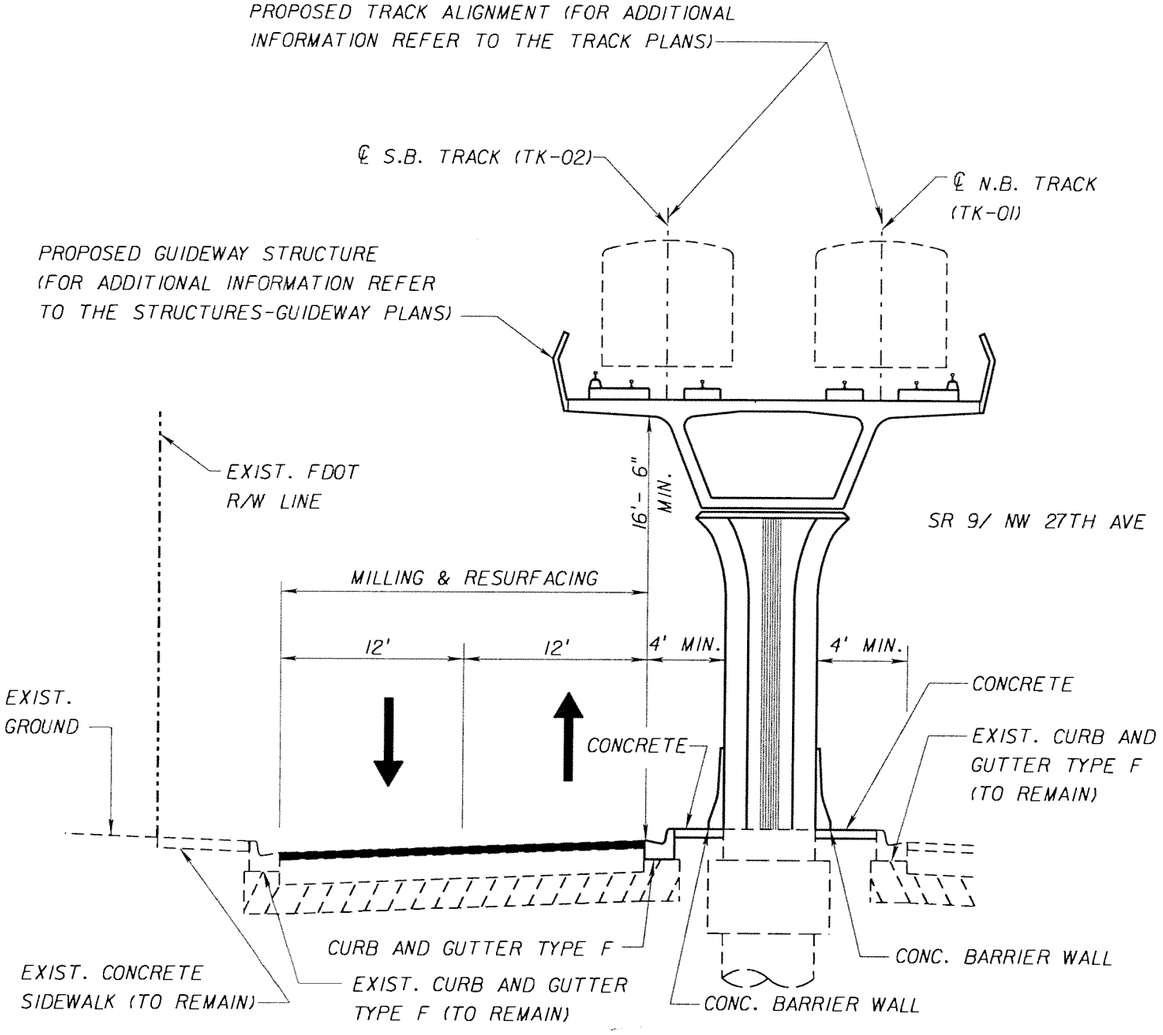

TYPICAL SECTION
FRONTAGE ROAD (SOUTHBOUND)

MILLING

MILL EXISTING ASPHALT PAVEMENT 2.50" AVG. DEPTH
(2.25" BELOW THE LIP OF GUTTER ON LOW SIDE)

RESURFACING

TYPE SP STRUCTURAL COURSE (TRAFFIC C) (100 LBS/SY 1.00" AVG.)
AND FRICTION COURSE FC 12.5 (160 LBS/SY, 1.50") (RUBBER)

SUBJECT TO CHANGE

W.L.L. Designed by	05-06 Date					
J.N. Drawn by	05-06 Date					
K.K. Checked by	05-02-06 Date					
M.A.B. Approved by	05-05-06 Date	No.	Date	By / Chk	App.	Revisions

NORTH CORRIDOR METRORAIL EXTENSION - PRELIMINARY ENGINEERING (100% SUBMITTAL)

MIAMI-DADE COUNTY — MIAMI-DADE TRANSIT

PARSONS
7600 CORPORATE CENTER DRIVE, SUITE 500
MIAMI, FLORIDA 33126
PHONE: (786) 464-1000 FAX: (786) 845-7119
CERTIFICATE OF AUTHORIZATION NO. 1838
Approved Date

BND
CIVIL ENGINEERING • ENVIRONMENTAL • AIRPORT • CONSTRUCTION MANAGEMENT • TRANSPORTATION
1200 NW 78 AVENUE, SUITE 400
MIAMI, FLORIDA 33126 - (305) 599-8495
Approved MICHAEL A. BUDALL, P.E. Date

ROADWAY

TYPICAL SECTIONS

Scale N.T.S. | Drawing RWP-21 | Sheet 21

NOTES:

1. TURNOUT CONSTRUCTION SHALL BE AS PER INDEX 515 AND ALL OTHER APPLICABLE INDEXES, EXCEPT AS PER SPECIAL CONDITIONS SHOWN ON THESE DETAILS.
2. THE VALUE OF "S" SHALL NOT BE FLATTER THAN 2% NOR EXCEED 8%.
3. CONTRACTOR SHALL MINIMIZE THE AREA OF HARMONIZATION BY USING A VALUE FOR "S" THAT BEST FITS THE EXISTING BACK OF SIDEWALK.
4. THESE DETAILS ARE APPLICABLE FOR SIDEWALK WIDTH AND/OR DRIVEWAY LENGTH OF 9 FT. OR LESS

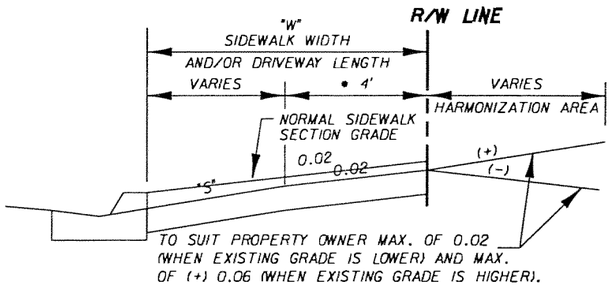

• USE 3' FOR SIDEWALK LESS THAN 6 FT. WIDE

SECTION A-A

N.T.S.

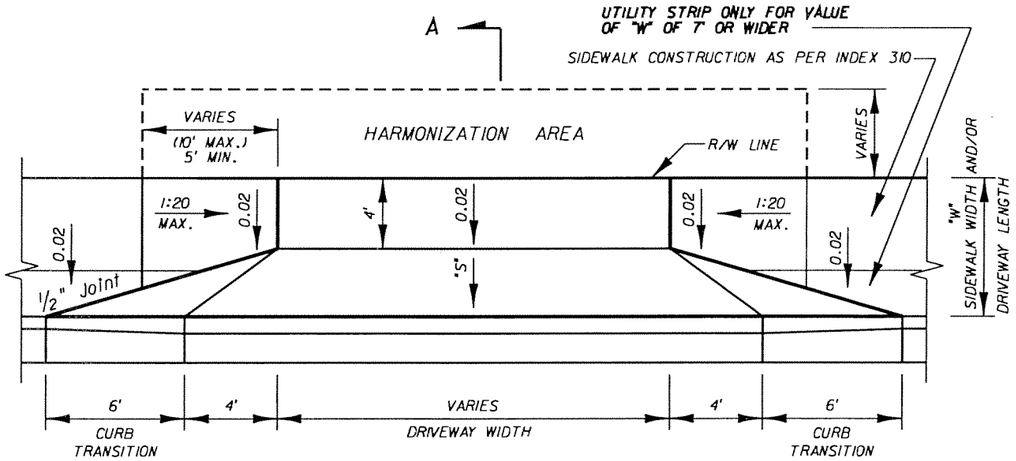

PLAN

N.T.S.

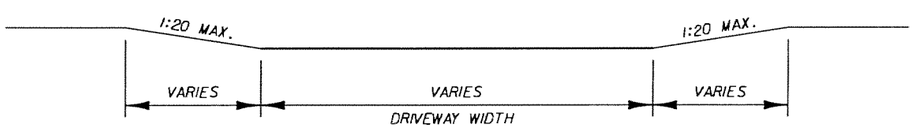

BACK OF SIDEWALK PROFILE

N.T.S.

STATIONING REFER TO ℄ N.B. T
UNLESS OTHERWISE NOTED

SIDEWALK ADJACENT TO CURB OR SIDEWALK WITH UTILITY STRIP AT 0.02 SLOPE

PREFERRED SCHEME

NOTES:

1. TURNOUT CONSTRUCTION SHALL BE AS PER INDEX 515 AND ALL OTHER APPLICABLE INDEXES, EXCEPT AS PER SPECIAL CONDITIONS SHOWN ON THESE DETAILS.
2. THE VALUE OF "S" SHALL NOT BE FLATTER THAN 2% NOR EXCEED 8%.
3. CONTRACTOR SHALL MINIMIZE THE AREA OF HARMONIZATION BY USING A VALUE FOR "S" THAT BEST FITS THE EXISTING BACK OF SIDEWALK.
4. THESE DETAILS ARE APPLICABLE FOR SIDEWALK WIDTH AND/OR DRIVEWAY LENGTH OF 9 FT. OR LESS

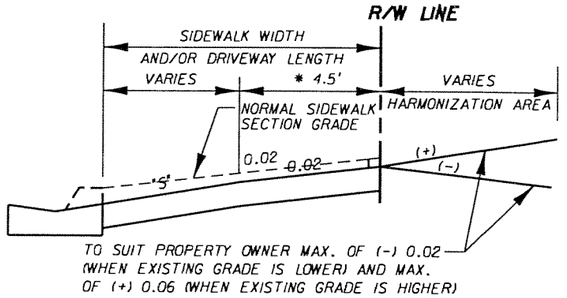

• USE 3.5' FOR SIDEWALK LESS THAN 6 FT. WIDE

SECTION A-A

N.T.S.

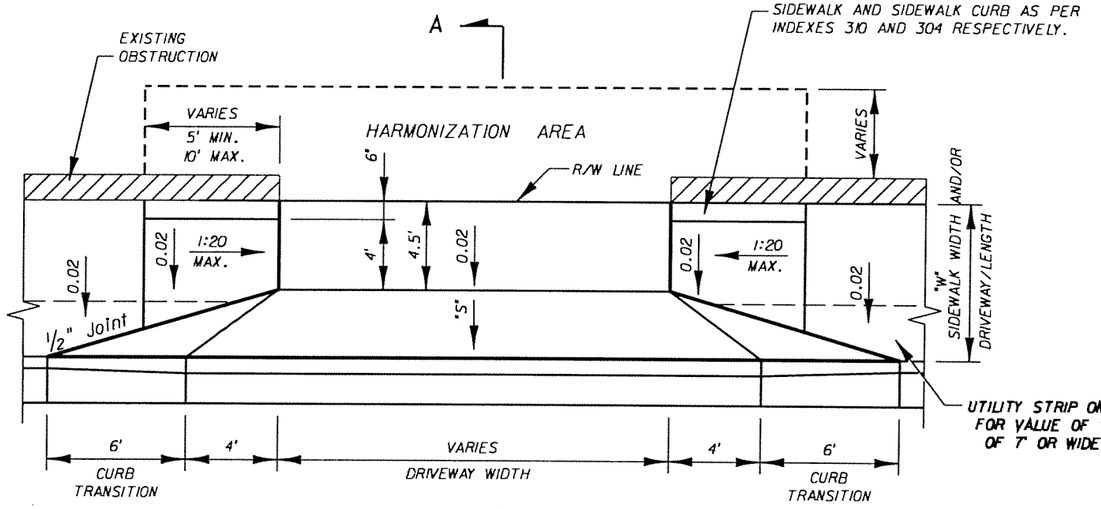

PLAN

N.T.S.

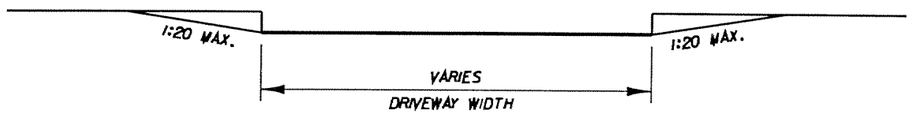

BACK OF SIDEWALK PROFILE

N.T.S.

SIDEWALK ADJACENT TO CURB OR SIDEWALK WITH UTILITY STRIP AT 0.02 SLOPE

ALTERNATIVE SCHEME

SUBJECT TO CHANGE

W.L.L. Designed by	05-06 Date						
J.N. Drawn by	05-06 Date						
K.K. Checked by	05-02-06 Date						
M.A.B. Approved by	05-05-06 Date	No.	Date	By / Chk	App.	Revisions	

NORTH CORRIDOR METRORAIL EXTENSION - PRELIMINARY ENGINEERING (100% SUBMITTAL)

MIAMI-DADE COUNTY — MIAMI-DADE TRANSIT

PARSONS
7600 CORPORATE CENTER DRIVE, SUITE 500
MIAMI, FLORIDA 33126
PHONE: (786) 464-1000 FAX: (786) 845-7119
CERTIFICATE OF AUTHORIZATION NO. 1838
Approved ____ Date ____

BND
CIVIL ENGINEERING • ENVIRONMENTAL • AIRPORT • CONSTRUCTION MANAGEMENT • TRANSPORTATION
1200 NW 78 AVENUE, SUITE 400
MIAMI, FLORIDA 33126 - (305) 599-8495
Approved MICHAEL A. BUDALL, P.E. Date ____

ROADWAY

TYPICAL SECTIONS

Scale N.T.S. | Drawing RWP-22 | Sheet 82

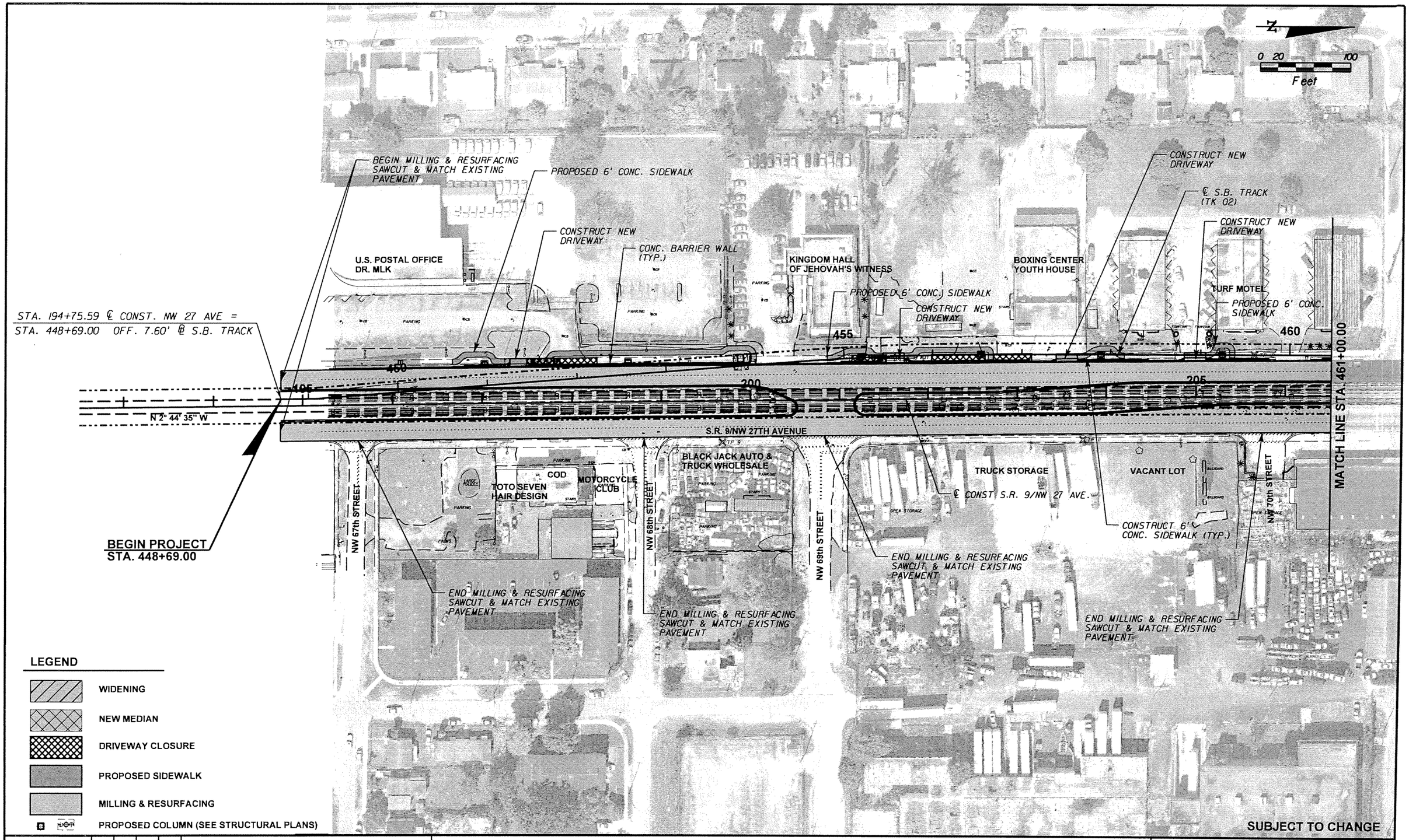

W.L.L.	05-06				
Designed by	Date				
J.N.	05-06				
Drawn by	Date				
C.V.	05-02-06				
Checked by	Date				
M.A.B.	05-05-06				
Approved by	Date	No.	Date	By / Chk	App. Revisions

NORTH CORRIDOR METRORAIL EXTENSION - PRELIMINARY ENGINEERING (100% SUBMITTAL)

MIAMI-DADE COUNTY

MIAMI-DADE TRANSIT

PARSONS
7600 CORPORATE CENTER DRIVE, SUITE 500
MIAMI, FLORIDA 33126
PHONE: (786) 464-1000 FAX: (786) 845-7119
CERTIFICATE OF AUTHORIZATION NO. 1838

Approved _____ Date _____

BND
CIVIL ENGINEERING • ENVIRONMENTAL • AIRPORT • CONSTRUCTION MANAGEMENT • TRANSPORTATION
1200 NW 78 AVENUE, SUITE 400
MIAMI, FLORIDA 33126 - (305) 599-8495

Approved MICHAEL A. BUDALL, P.E. Date _____

ROADWAY

ROADWAY PLANS

Scale 1" = 100' | Drawing RWP-23 | Sheet 83

0 20 100
Feet

PROPOSED 6' CONC. SIDEWALK
END MILLING & RESURFACING SAWCUT & MATCH EXISTING PAVEMENT
PROPOSED 6' CONC. SIDEWALK
DRIVEWAY TO BE CLOSED
CONC. BARRIER WALL (TYP.)
STA EQUATION
STA. 464+51.95 BK =
STA. 92+04.67 AH
℄ SB TRACK S.R. 9/
NW 27 TH AV.
CONSTRUCT 6' CONC. SIDEWALK (TYP.)
℄ CONST. S.R. 9/NW 27 AVE.
END MILLING & RESURFACING SAWCUT & MATCH EXISTING PAVEMENT
CONSTRUCT 6' CONC. SIDEWALK
DRIVEWAY TO BE CLOSED
CONSTRUCT 6' CONC. SIDEWALK
DRIVEWAY TO BE CLOSED
EXISTING METRORAIL DOUBLE TRACK
END MILLING & RESURFACING SAWCUT & MATCH EXISTING PAVEMENT
END MILLING & RESURFACING SAWCUT & MATCH EXISTING PAVEMENT
END MILLING & RESURFACING SAWCUT & MATCH EXISTING PAVEMENT
BEGIN MILLING & RESURFACING SAWCUT & MATCH EXISTING PAVEMENT
℄ N.B. TRACK (TK 01)
℄ S.B. TRACK (TK 02)
STA 218+09.23 ℄ CONST. S.R. 9 =
STA 103+37.72 OFF. 7.11' ℄ S.B. TRACK

TURF MOTEL
NW 71st STREET
GUS PAINT & BODY SHOP INC.
TRUCK PLACE
NW 73st STREET
LA VEGA MOTOR CAR & TRUCK
F.E.C. RAILROAD
FESTA TRANSPORT
3 STORAGE INC.
NW MILL WORKS
95
100
105
210
S.R.9 / NW 27th AVENUE
MATCH LINE STA. 461+00.00
MATCH LINE STA. 106+00.00
AMERICAN SALVAGE
VACANT LOT GAS STATION
NW 71st TERRACE
RO-SA-MAR INC USED CAR
VACANT LOT
NW 72nd STREET
PAYLESS CAR SALES
USED CARS
REDS SPECIALS
NW 74th STREET
VACANT LOT

LEGEND
WIDENING
NEW MEDIAN
DRIVEWAY CLOSURE
PROPOSED SIDEWALK
MILLING & RESURFACING
PROPOSED COLUMN (SEE STRUCTURAL PLANS)

SUBJECT TO CHANGE

W.L.L. Designed by	05-06 Date				
J.N. Drawn by	05-06 Date				
C.V. Checked by	05-02-06 Date				
M.A.B. Approved by	05-05-06 Date	No.	Date	By / Chk	App. Revisions

NORTH CORRIDOR METRORAIL EXTENSION - PRELIMINARY ENGINEERING (100% SUBMITTAL)

MIAMI-DADE COUNTY
MIAMI-DADE TRANSIT

PARSONS
7600 CORPORATE CENTER DRIVE, SUITE 500
MIAMI, FLORIDA 33126
PHONE: (786) 464-1000 FAX: (786) 845-7119
CERTIFICATE OF AUTHORIZATION NO. 1838
Approved Date

BND
CIVIL ENGINEERING • ENVIRONMENTAL • AIRPORT • CONSTRUCTION MANAGEMENT • TRANSPORTATION
1200 NW 78 AVENUE, SUITE 400
MIAMI, FLORIDA 33126 - (305) 599-8495
Approved MICHAEL A. BUDALL, P.E. Date

ROADWAY

ROADWAY PLANS

Scale 1" = 100' | Drawing RWP-24 | Sheet 84

0 20 100
Feet

PROPOSED 6' CONC. SIDEWALK

NW 75th STREET

PROPOSED 6' CONC. SIDEWALK

EXISTING METRORAIL

PROPOSED 6' CONC. SIDEWALK

PROPOSED 6' CONC. SIDEWALK

TYPE F CURB AND GUTTER

℄ CONST. NW 79TH ST.

END MILLING & RESURFACING SAWCUT & MATCH EXISTING PAVEMENT

NW 79th STREET

N 87° 38' 01" E

A&L TRUCK PARTS & EQUIPMENT

PALM FAMILY MOBILE HOME PARK

A1A CAR CENTER INC.

FAMILY DOLLAR

ROYAL CASTLE

105

110

225

230

115

45°42'59"

MATCH LINE STA. 106+00.00

℄ S.B. TRACK (TK 02) FLY OVER

105

110

S.R.9 / NW 27th AVENUE

110

115

115

℄ CONST. S.R. 9/NW 27 AVE.

BEGIN MEDIAN RECONSTRUCTION

TYPE F CURB & GUTTER (TYP.)

END MEDIAN RECONSTRUCTION

CAR SMART AUTO SALE

LA QUARTER NIGHT CLUB

FLAT BUSH HAIR (ABANDONED)

A AUTO INS.

N 87° 44' 56" E

MATCH LINE STA. 120+00.00

VACANT LOT

℄ N.B TRACK (TK 01)

LOS GOMEZ AUTO SALES

CONC. BARRIER WALL (TYP.)

SHOPPING PLAZA

PROPOSED CURB RAMP (CR 26)

BOYS & GIRLS DAY CARE

VACANT LOT

NW 75th STREET

NW 77th STREET

NW 79th STREET

END MILLING & RESURFACING SAWCUT & MATCH EXISTING PAVEMENT

BEGIN MILLING & RESURFACING SAWCUT & MATCH EXISTING PAVEMENT

END MILLING & RESURFACING SAWCUT & MATCH EXISTING PAVEMENT

TYPE F CURB & GUTTER (EXIST. TO REMAIN)

STA. 234+35.31 S.R. 9 NE 27 TH AV ℄ CONST. = STA. 14+02.09

END MILLING & RESURFACING SAWCUT & MATCH EXISTING PAVEMENT

LEGEND

- WIDENING
- NEW MEDIAN
- DRIVEWAY CLOSURE
- PROPOSED SIDEWALK
- MILLING & RESURFACING
- PROPOSED COLUMN (SEE STRUCTURAL PLANS)

SUBJECT TO CHANGE

W.L.L.	05-06				
Designed by	Date				
J.N.	05-06				
Drawn by	Date				
C.V.	05-02-06				
Checked by	Date				
M.A.B.	05-05-06				
Approved by	Date	No.	Date	By / Chk.	App.	Revisions

NORTH CORRIDOR METRORAIL EXTENSION - PRELIMINARY ENGINEERING (100% SUBMITTAL)

MIAMI-DADE COUNTY

MIAMI-DADE TRANSIT

PARSONS
7600 CORPORATE CENTER DRIVE, SUITE 500
MIAMI, FLORIDA 33126
PHONE: (786) 464-1000 FAX: (786) 845-7119
CERTIFICATE OF AUTHORIZATION NO. 1836

BND
CIVIL ENGINEERING • ENVIRONMENTAL • AIRPORT • CONSTRUCTION MANAGEMENT • TRANSPORTATION
1200 NW 78 AVENUE, SUITE 400
MIAMI, FLORIDA 33126 - (305) 599-8495

Approved _____ Date _____

Approved MICHAEL A. BUDALL, P.E. Date _____

ROADWAY

ROADWAY PLANS

Scale 1" = 100' | Drawing RWP-25 | Sheet 85

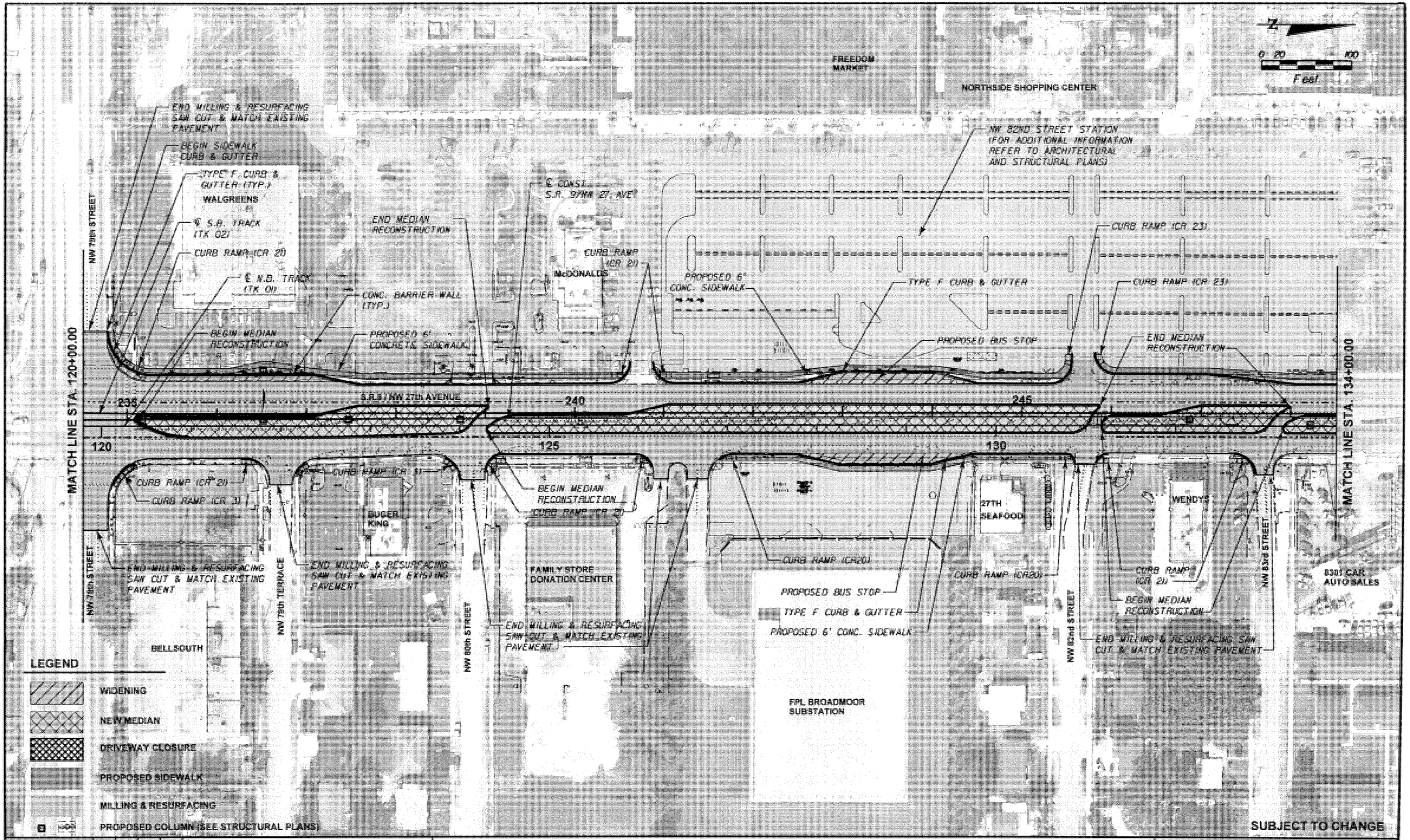

W.L.L. Designed by	05-06 Date					
J.N. Drawn by	05-06 Date					
C.V. Checked by	05-02-06 Date					
M.A.B. Approved by	05-05-06 Date	No.	Date	By	App.	Revision

NORTH CORRIDOR METRORAIL EXTENSION - PRELIMINARY ENGINEERING (100% SUBMITTAL)

MIAMI-DADE COUNTY

MIAMI-DADE TRANSIT

PARSONS
7600 CORPORATE CENTER DRIVE, SUITE 500
MIAMI, FLORIDA 33126
PHONE: (786) 464-1000 FAX: (786) 645-7119
CERTIFICATE OF AUTHORIZATION NO. 1838

BND
CIVIL ENGINEERING • ENVIRONMENTAL • AIRPORT • CONSTRUCTION MANAGEMENT • TRANSPORTATION
1200 NW 78 AVENUE, SUITE 400
MIAMI, FLORIDA 33126 - (305) 599-8495

Approved | Date | Approved MICHAEL A. BUDALL, P.E. | Date

ROADWAY

ROADWAY PLANS

Scale 1" = 100' | Drawing RWP-26 | Sheet 86

END MILLING & RESURFACING SAWCUT & MATCH EXISTING PAVEMENT

NW 82ND STREET STATION (FOR ADDITIONAL INFORMATION REFER TO ARCHITECTURAL AND STRUCTURAL PLANS).

NW 84th STREET

℄ CONST. NW 87TH ST.

TYPE F CURB & GUTTER (TYP.)

CURB RAMP (CR 26)

PROPOSED 6' CONC SIDEWALK

N 87° 55' 13" E

WACHOVIA

CURB RAMP (CR 20)

PAWN SHOP

FIRESTONE

℄ S.B. TRACK (TK 02)

℄ N.B. TRACK (TK 01)

DEPARTMENT OF HUMAN RESOURCES

UNITED HOUSE OF PRAYER FOR ALL PEOPLE

PROPOSED 6' CONCRETE SIDEWALK

CONC. BARRIER WALL (TYP.)

CHUCHO AUTO REPAIR

RADIATOR'S US

PROPOSED 6' CONCRETE SIDEWALK

TYPE F CURB & GUTTER

CURB RAMP (CR 23)

NW 87th STREET

N 87° 09' 47" E

NW 28th AVENUE

PROPOSED 6' CONC. SIDEWALK

U-GAS

MATCH LINE STA. 134+00.00

250

135

90°7'48.26"

255

140

145

260

S.R.9 / NW 27th AVENUE

89°22'45"

MATCH LINE STA. 148+00.00

SAVACAN

END MEDIAN RECONSTRUCTION

STA. 251+34.61 ℄ CONST. S.R. 9 /NW 27TH AVE=
STA. 14+22.97 ℄ CONST. NW 84ST

BEGIN MEDIAN RECONSTRUCTION

℄ CONST. S.R. 9/NW 27AVE.

URBAN LEAGUE OF GREATER MIAMI

END MEDIAN RECONSTRUCTION

END MILLING & RESURFACING SAWCUT & MATCH EXISTING PAVEMENT

STA. 261+24.51 ℄ CONST. S.R. 9/ NW 27 TH AV =
STA. 12+00.45 ℄ CONST. NW 87 ST

℄ CONST. NW 87TH ST.

N 87° 23' 24" E

NW 87th STREET

DAIRY QUEEN

N

0 20 100

Feet

LEGEND

- WIDENING
- NEW MEDIAN
- DRIVEWAY CLOSURE
- PROPOSED SIDEWALK
- MILLING & RESURFACING
- PROPOSED COLUMN (SEE STRUCTURAL PLANS)

SUBJECT TO CHANGE

W.L.L. Designed by	05-06 Date					
J.N. Drawn by	05-06 Date					
C.V. Checked by	05-02-06 Date					
M.A.B. Approved by	05-05-06 Date	No.	Date	By / Chk	App.	Revisions

NORTH CORRIDOR METRORAIL EXTENSION - PRELIMINARY ENGINEERING (100% SUBMITTAL)

MIAMI-DADE COUNTY

MIAMI-DADE TRANSIT

PARSONS
7600 CORPORATE CENTER DRIVE, SUITE 500
MIAMI, FLORIDA 33126
PHONE: (786) 464-1000 FAX: (786) 845-7119
CERTIFICATE OF AUTHORIZATION NO. 1838
Approved Date

BND
CIVIL ENGINEERING • ENVIRONMENTAL • AIRPORT • CONSTRUCTION MANAGEMENT • TRANSPORTATION
1200 NW 78 AVENUE, SUITE 400
MIAMI, FLORIDA 33126 - (305) 599-8495
Approved MICHAEL A. BUDALL, P.E. Date

ROADWAY

ROADWAY PLANS

Scale 1" = 100' | Drawing RWP-27 | Sheet 87

N

0 20 100
Feet

NW 28th AVENUE

PROPOSED 6' CHAIN LINK FENCE (TYP.)

NW 87th TERRACE

AUTOKRAZE

A.Z. AUTO SALES

PROPOSED 6' CONC. SIDEWALK

TYPE F CURB & GUTTER

EBENEZER AUTO SALES

TYPE F CURB & GUTTER

CURB RAMP (CR 20)

NW 88th STREET

END MILLING & RESURFACING SAWCUT & MATCH EXISTING PAVEMENT

AUTOWORLD OF AMERICAS

TYPE F CURB & GUTTER (TYP.)

CURB RAMP (CR 20)

NW 90th STREET

COLLEGE AUTO SALES

TYPE F CURB & GUTTER

CURB RAMP (CR 20)

NW 91th STREET

END MILLING & RESURFACING SAWCUT & MATCH EXISTING PAVEMENT

TYPE F CURB & GUTTER (TYP.)

℄ S.B. TRACK (TK 02)

℄ N.B. TRACK (TK 01)

CURB RAMP (CR 23)

PROPOSED 6' CHAIN LINK FENCE (TYP.)

MATCH LINE STA. 148+00.00

150 265

155 270

160 275

MATCH LINE STA. 162+00.00

S.R.9 / NW 27th AVENUE

DAIRY QUEEN

NW 87th TERRACE

BLACK JACK AUTO & TRUCK WHOLESALE INC.

FREE PAWN

NW 88th STREET

JM TRUCK SALES

27th AVENUE MOTEL

27th TRUCK'S INC

EXIST. DRIVEWAY TO BE CLOSED
CONST. NEW 6' CONC. SIDEWALK
CONST. CURB & GUTTER TYPE F (TYP.)

BEGIN MILLING & RESURFACING SAWCUT & MATCH EXISTING PAVEMENT

NW 90th STREET

GRIFFIN AUTO

℄ CONST. S.R. 9/NW 27 AVE.

BEST USED TRUCKS

BEGIN MILLING & RESURFACING SAWCUT & MATCH EXISTING PAVEMENT

NW 91th STREET

PROGRESSIVE

DIESEL UNLIMITED

NW 92th STREET

LEGEND

- WIDENING
- NEW MEDIAN
- DRIVEWAY CLOSURE
- PROPOSED SIDEWALK
- MILLING & RESURFACING
- PROPOSED COLUMN (SEE STRUCTURAL PLANS)

SUBJECT TO CHANGE

W.L.L. Designed by	05-06 Date					
J.N. Drawn by	05-06 Date					
C.V. Checked by	05-02-06 Date					
M.A.B. Approved by	05-05-06 Date	No.	Date	By / Chk	App.	Revisions

NORTH CORRIDOR METRORAIL EXTENSION - PRELIMINARY ENGINEERING (100% SUBMITTAL)

MIAMI-DADE COUNTY

MIAMI-DADE TRANSIT

PARSONS
7600 CORPORATE CENTER DRIVE, SUITE 500
MIAMI, FLORIDA 33126
PHONE: (786) 464-1000 FAX: (786) 845-7119
CERTIFICATE OF AUTHORIZATION NO. 1838
Approved Date

BND
CIVIL ENGINEERING • ENVIRONMENTAL • AIRPORT • CONSTRUCTION MANAGEMENT • TRANSPORTATION
1200 NW 78 AVENUE, SUITE 400
MIAMI, FLORIDA 33126 - (305) 599-8495
Approved MICHAEL A. BUDALL, P.E. Date

ROADWAY

ROADWAY PLANS

Scale 1" = 100' | Drawing RWP-28 | Sheet 88

0 20 100
Feet

NW 28th AVENUE

PRICE CHOICE FOOD MARKET

SMYTH'S

STEPHENS CERTIFIED PUBLIC SCALES

WESTERN UNION

NW 94th STREET

NW 95th STREET

NW 95th TERRACE

NW 93rd STREET

PROPOSED 6' CHAIN LINK FENCE (TYP.)

VACANT LOT

EXIST. DRIVEWAY TO BE CLOSED CONST. 6' CONC. SIDEWALK CONST. TYPE F CURB & GUTTER (TYP.)

END MILLING & RESURFACING SAWCUT & MATCH EXISTING PAVEMENT

TYPE F CURB & GUTTER

TYPE F CURB & GUTTER

CURB RAMP (CR 20)

℄ N.B. TRACK (TK 01)

℄ S.B. TRACK (TK 02)

EXIST. DRIVEWAY TO BE CLOSED CONST. 6' CONC. SIDEWALK CONST. TYPE F CURB & GUTTER (TYP.)

PROPOSED 6' CHAIN LINK FENCE (TYP.)

SUPERCAR

INTERSTATE BLOOD BANK

FAMILY DOLLAR

CURB RAMP (CR 20)

MATCH LINE STA. 162+00.00

MATCH LINE STA. 176+00.00

165 280

170 285

175 290

S.R.9 / NW 27th AVENUE

℄ CONST. S.R.9/NW 27 AVE.

BEGIN MILLING & RESURFACING SAWCUT & MATCH EXISTING PAVEMENT

PROGESSIVE DAY CARE CENTER

NW 92nd STREET

ADVANCE AUTO PARTS

NW 93rd STREET

NICA MOTORS

ARRIOLA AUTO SALES CORP.

NW 93rd TERRACE

K & L AUTO

AUTO PIEZAS USA

ARRIOLA AUTO SALES

F.R.C. AUTO SALES

NW 95th STREET

SHOPPING PLAZA

NW 26th AVENUE

NW 26th AVENUE

LEGEND

WIDENING

NEW MEDIAN

DRIVEWAY CLOSURE

PROPOSED SIDEWALK

MILLING & RESURFACING

PROPOSED COLUMN (SEE STRUCTURAL PLANS)

SUBJECT TO CHANGE

W.L.L.	05-06					
Designed by	Date					
J.N.	05-06					
Drawn by	Date					
C.V.	05-02-06					
Checked by	Date					
M.A.B.	05-05-06					
Approved by	Date	No.	Date	By / Chk	App.	Revisions

NORTH CORRIDOR METRORAIL EXTENSION - PRELIMINARY ENGINEERING (100% SUBMITTAL)

MIAMI-DADE COUNTY

MIAMI-DADE TRANSIT

PARSONS
7600 CORPORATE CENTER DRIVE, SUITE 500
MIAMI, FLORIDA 33126
PHONE: (786) 464-1000 FAX: (786) 845-7119
CERTIFICATE OF AUTHORIZATION NO. 1836

BND
CIVIL ENGINEERING • ENVIRONMENTAL • AIRPORT • CONSTRUCTION MANAGEMENT • TRANSPORTATION
1200 NW 78 AVENUE, SUITE 400
MIAMI, FLORIDA 33126 - (305) 599-8495

Approved _____ Date _____

Approved MICHAEL A. BUDALL, P.E. Date _____

ROADWAY

ROADWAY PLANS

Scale 1" = 100' | Drawing RWP-29 | Sheet 89

DRIVEWAY TO BE CLOSED
CONST. 6' CONC. SIDEWALK
CONST. TYPE F CURB & GUTTER (TYP.)

DRIVEWAY TO BE CLOSED
CONST. 6' CONC. SIDEWALK
CONST. TYPE F CURB & GUTTER (TYP.)

PROPOSED 6' CHAIN LINK FENCE (TYP.)

CURB RAMP (CR 3)

NORTH CENTRAL BRANCH LIBRARY

NW 96th STREET

NW 97th STREET

TONY'S SW IMPORT CAR SALES

VACANT LOT

CANO MOTORS

VACANT LOT

BENNY'S TRUCK SALE

CURB RAMP (CR 20)

TYPE F CURB & GUTTER (TYP.)

PROPOSED 6' CHAIN LINK FENCE (TYP.)

NW 98th STREET

END MILLING & RESURFACING SAWCUT & MATCH EXISTING PAVEMENT

℄ S.B. TRACK (TK 02)

℄ N.B. TRACK (TK 01)

PREFERRED AUTO ENTERPRISE

RUCHI TRUCK SALE

TYPE F CURB & GUTTER (TYP.)

CURB RAMP (CR 20)

NW 99th STREET

END MILLING & RESURFACING SAWCUT & MATCH EXISTING PAVEMENT

CURB RAMP (CR 20)

SHOPPING PLAZA

MATCH LINE STA. 176+00.00

MATCH LINE STA. 190+00.00

180 295

185 300

S.R.9 / NW 27th AVENUE

℄ CONST. S.R. 9/NW 27 AVE.

CURB RAMP (CR. 20)

BEGIN MILLING & RESURFACING SAWCUT & MATCH EXISTING PAVEMENT

PROPOSED 6' CHAIN LINK FENCE (TYP.)

TYPE F CURB & GUTTER

BEST PRICE AUTO SALES

FLORIST

GREATER VISION MINISTRY

CARIBBEAN MOTORS INC.

SHOPPING PLAZA

CANO MOTORS

BENJI AUTOSALES

GENERAL AUTO CREDIT

AL'S TROPICAL CARS

ELITE

NW 97th STREET

NW 99th STREET

NW 26th AVENUE

BEGIN MILLING & RESURFACING SAWCUT & MATCH EXISTING PAVEMENT

N

0 20 100
Feet

LEGEND

- WIDENING
- NEW MEDIAN
- DRIVEWAY CLOSURE
- PROPOSED SIDEWALK
- MILLING & RESURFACING
- PROPOSED COLUMN (SEE STRUCTURAL PLANS)

SUBJECT TO CHANGE

W.L.L. Designed by	05-06 Date					
J.N. Drawn by	05-06 Date					
C.V. Checked by	05-02-06 Date					
M.A.B. Approved by	05-05-06 Date	No.	Date	By / Chk	App.	Revisions

NORTH CORRIDOR METRORAIL EXTENSION - PRELIMINARY ENGINEERING (100% SUBMITTAL)

MIAMI-DADE COUNTY

MIAMI-DADE TRANSIT

PARSONS
7600 CORPORATE CENTER DRIVE, SUITE 500
MIAMI, FLORIDA 33126
PHONE: (786) 484-1000 FAX: (786) 845-7119
CERTIFICATE OF AUTHORIZATION NO. 1836

Approved ____ Date ____

BND
CIVIL ENGINEERING • ENVIRONMENTAL • AIRPORT • CONSTRUCTION MANAGEMENT • TRANSPORTATION
1200 NW 78 AVENUE, SUITE 400
MIAMI, FLORIDA 33126 - (305) 599-8495

Approved MICHAEL A. BUDALL, P.E. Date ____

ROADWAY

ROADWAY PLANS

Scale 1" = 100' | Drawing RWP-30 | Sheet 90

N

0 20 100
Feet

PROPOSED 6' CHAIN LINK FENCE (TYP.)

NW 100th STREET

END MILLING & RESURFACING SAWCUT & MATCH EXISTING PAVEMENT

TYPE F CURB & GUTTER (TYP.)

CURB RAMP (CR 21)

CURB RAMP (CR 20)

NEW IMAGE MOTORS

SUN # 1 AUTO SALES

LA CARIDAD HARWARE

PAWN SHOP

BAHIA HONDA SUPERMARKET

NW 101st STREET

END MILLING & RESURFACING SAWCUT & MATCH EXISTING PAVEMENT

TYPE F CURB & GUTTER (TYP.)

CURB RAMP (CR 20)

REMOVE EXIST. SIDEWALK & CONST. 6' CONC. SIDEWALK CONST. TYPE F CURB & GUTTER (TYP.)

SHOPPING PLAZA

NW 102nd STREET

PUBLIC AUTO AUCTION

TYPE F CURB & GUTTER (TYP.)

CURB RAMP (CR 20)

N 88° 00' 59" E

NW 103rd STREET

NW 28th AVENUE

℄ CONST. NW 103RD ST.

PROPOSED 6' CHAIN LINK FENCE (TYP.)

℄ S.B. TRACK (TK 02)

℄ N.B. TRACK (TK 01)

SHELL

BAILEY FURNITURE

FLIPPER MARINE

MATCH LINE STA. 190+00.00

190 305

195 310

90°13'34.93"

200 315

MATCH LINE STA. 204+00.00

S.R.9 / NW 27TH AVENUE

CURB RAMP (CR 20)

℄ CONST. S.R.9/NW 27 AVE.

BEGIN MILLING & RESURFACING SAWCUT & MATCH EXISTING PAVEMENT

R & R CARS

JAPANESE AUTO SALES

NW 101st STREET

FIRST CAPITAL AUTO

SHOPPING PLAZA

REMOVE EXIST. SIDEWALK & CONST. 6' CONC. SIDEWALK CONST. TYPE F CURB & GUTTER (TYP.)

BEGIN MILLING & RESURFACING SAWCUT & MATCH EXISTING PAVEMENT

MIAMI VANS & TRUCKS

MOBIL GAS STATION

N 88° 00' 59" E

NW 103rd STREET

BEGIN MILLING & RESURFACING SAWCUT & MATCH EXISTING PAVEMENT

SHOPPING PLAZA

BENJI AUTO SALES

STA. 314+81.00 ℄ CONST. S.R. 9/ NW 27 TH AV= STA. 12+19.92 ℄ CONST. NW 103 ST.

10

15

NW 26th AVENUE

LEGEND

- WIDENING
- NEW MEDIAN
- DRIVEWAY CLOSURE
- PROPOSED SIDEWALK
- MILLING & RESURFACING
- PROPOSED COLUMN (SEE STRUCTURAL PLANS)

SUBJECT TO CHANGE

W.L.L. Designed by	05-06 Date					
J.N. Drawn by	05-06 Date					
C.V. Checked by	05-02-06 Date					
M.A.B. Approved by	05-05-06 Date	No.	Date	By / Chk	App.	Revisions

NORTH CORRIDOR METRORAIL EXTENSION - PRELIMINARY ENGINEERING (100% SUBMITTAL)

ROADWAY

MIAMI-DADE COUNTY

MIAMI-DADE TRANSIT

PARSONS
7600 CORPORATE CENTER DRIVE, SUITE 500
MIAMI, FLORIDA 33126
PHONE: (786) 464-1000 FAX: (786) 845-7119
CERTIFICATE OF AUTHORIZATION NO. 1838
Approved Date

BND
CIVIL ENGINEERING • ENVIRONMENTAL • AIRPORT • CONSTRUCTION MANAGEMENT • TRANSPORTATION
1200 NW 78 AVENUE, SUITE 400
MIAMI, FLORIDA 33126 - (305) 599-8495
Approved MICHAEL A. BUDALL, P.E. Date

ROADWAY PLANS

Scale 1" = 100' | Drawing RWP-31 | Sheet 91

N

0 20 100
Feet

NW 28th COURT

NW 28th AVENUE

CANAL C-7

NW 106th STREET

CENTRAL
RECEIVING
MAINTENANCE
MIAMI
DADE
COLLEGE

PROPOSED 6' CHAIN LINK FENCE (TYP.)

END MILLING & RESURFACING SAWCUT & MATCH EXISTING PAVEMENT

PROPOSED 6' CONC. SIDEWALK

TYPE F CURB & GUTTER (TYP.)

FLIPPER MARINE

JK AUTO SALES

SOLARS AUTO SALES

G&G QUALITY AUTO SALES

℄ S.B. TRACK (TK 02)

℄ N.B.TRACK (TK 01)

DENSE TREES

MATCH LINE STA. 204+00.00

MATCH LINE STA. 218+00.00

205 320

210

215

325

330

RENTAL COMMUNITY

CURB RAMP (CR 20)

MARINE WORLD

JK AUTO BROKERS

NW 104th TERRACE

NW 105th STREET

℄ CONST. S.R. 9/NW 27 AVE.

JOSEPHS TIRES

TOMMY CYCLE

NATHALY AUTO SALES

S.R.9 / NW 27th AVENUE

N 2° 12' 36" W

KAR CONNECTION

CURB RAMP (CR 20)

BEGIN MILLING & RESURFACING SAWCUT & MATCH EXISTING PAVEMENT

NW 106th STREET

CANAL C-7

NW 107th STREET

MCDONALDS

NW 108th STREET

SUBJECT TO CHANGE

LEGEND

- WIDENING
- NEW MEDIAN
- DRIVEWAY CLOSURE
- PROPOSED SIDEWALK
- MILLING & RESURFACING
- PROPOSED COLUMN (SEE STRUCTURAL PLANS)

W.L.L. Designed by	05-06 Date					
J.N. Drawn by	05-06 Date					
C.V. Checked by	05-02-06 Date					
M.A.B.	05-05-06					
Approved by	Date	No.	Date	By / Chk	App.	Revisions

NORTH CORRIDOR METRORAIL EXTENSION - PRELIMINARY ENGINEERING (100% SUBMITTAL)

MIAMI-DADE COUNTY

MIAMI-DADE TRANSIT

PARSONS
7600 CORPORATE CENTER DRIVE, SUITE 500
MIAMI, FLORIDA 33126
PHONE: (786) 464-1000 FAX: (786) 845-7119
CERTIFICATE OF AUTHORIZATION NO. 1838

Approved ____ Date ____

BND
CIVIL ENGINEERING • ENVIRONMENTAL • AIRPORT • CONSTRUCTION MANAGEMENT • TRANSPORTATION
1200 NW 78 AVENUE, SUITE 400
MIAMI, FLORIDA 33126 - (305) 599-8495

Approved MICHAEL A. BUDALL, P.E. Date ____

ROADWAY

ROADWAY PLANS

Scale 1" = 100' | Drawing RWP-32 | Sheet 97

0 20 100
Feet

TYPE F CURB & GUTTER (TYP.)
℄ S.B. TRACK (TK 02)
BEGIN MILLING & RESURFACING SAWCUT & MATCH EXISTING PAVEMENT
℄ N.B. TRACK (TK 01)
CONC. BARRIER WALL (TYP.)
EAST ROAD
TYPE F CURB & GUTTER (TYP.)
BEGIN MEDIAN RECONSTRUCTION
TYPE F CURB & GUTTER (TYP.)
MATCH LINE STA. 218+00.00
LOT 18
NW 110th STREET
LOT 3
WIDENING (TYP.)
MIAMI-DADE COLLEGE (NORTH CAMPUS)
PROPOSED 10' CONCRETE SIDEWALK
CURB RAMP (CR 3)
END MILLING & RESURFACING SAWCUT & MATCH EXISTING PAVEMENT
CURB RAMP (CR 20)
LOT 1
WIDENING (TYP.)
PROPOSED 10' CONCRETE SIDEWALK
CURB RAMP (CR 20)
CONC. BARRIER WALL (TYP.)
℄ CONST. EAST RD.
END MEDIAN RECONSTRUCTION
BEGIN MEDIAN RECONSTRUCTION
END MEDIAN RECONSTRUCTION
CURB RAMP (CR 3)
LOT 2
END MILLING & RESURFACING SAWCUT & MATCH EXISTING PAVEMENT
MATCH LINE STA. 232+00.00
S.R. 9 (N.W. 27th AVENUE)

LEGEND

- WIDENING
- NEW MEDIAN
- DRIVEWAY CLOSURE
- PROPOSED SIDEWALK
- MILLING & RESURFACING
- PROPOSED COLUMN (SEE STRUCTURAL PLANS)

SUBJECT TO CHANGE

W.L.L.	05-06					
Designed by	Date					
J.N.	05-06					
Drawn by	Date					
C.V.	05-02-06					
Checked by	Date					
M.A.B.	05-05-06					
Approved by	Date	No.	Date	By / Chk	App.	Revisions

NORTH CORRIDOR METRORAIL EXTENSION - PRELIMINARY ENGINEERING (100% SUBMITTAL)

MIAMI-DADE COUNTY

MIAMI-DADE TRANSIT

PARSONS
7600 CORPORATE CENTER DRIVE, SUITE 500
MIAMI, FLORIDA 33126
PHONE: (786) 464-1000 FAX: (786) 845-7119
CERTIFICATE OF AUTHORIZATION NO. 1836

BND
CIVIL ENGINEERING • ENVIRONMENTAL • AIRPORT • CONSTRUCTION MANAGEMENT • TRANSPORTATION
1200 NW 78 AVENUE, SUITE 400
MIAMI, FLORIDA 33126 - (305) 599-8455

Approved _____ Date _____

Approved MICHAEL A. BUDALL, P.E. Date _____

ROADWAY

ROADWAY PLANS

Scale 1" = 100' Drawing RWP-33 Sheet 43

MIAMI-DADE COLLEGE (NORTH CAMPUS)

LOT 16

LOT 1

LOT 14

LOT 15

N

0 20 100

Feet

END MILLING & RESURFACING SAWCUT & MATCH EXISTING PAVEMENT

NW 113th STREET

CURB RAMP (CR 20)

PROPOSED 10' CONCRETE SIDEWALK

TYPE F CURB & GUTTER

CURB RAMP (CR 1)

END MILLING & RESURFACING SAW CUT & MATCH EXISTING PAVEMENT

CURB RAMP (CR 21)

℄ CONST. EAST RD.

CURB RAMP (CR 26)

CURB RAMP (CR 23)

WIDENING (TYP.)

BEGIN-RECONSTRUCTION END MILLING & RESURFACING STA. 245+68.00

END MEDIAN RECONSTRUCTION

℄ S.B. TRACK (TK 02)

℄ N.B. TRACK (TK 01)

MATCH LINE STA. 232+00.00

MATCH LINE STA. 246+00.00

N 2° 08' 31" W

235

240

245

30

EAST ROAD

TYPE F CURB & GUTTER

BEGIN MEDIAN RECONSTRUCTION

END MEDIAN RECONSTRUCTION

REMOVE EXIST. CURB RAMP & CONSTRUCT MEDIAN

PROPOSED 10' CONCRETE SIDEWALK

END MILLING & RESURFACING SAWCUT & MATCH EXISTING PAVEMENT

6' CONC. SIDEWALK

LEGEND

- WIDENING
- NEW MEDIAN
- DRIVEWAY CLOSURE
- PROPOSED SIDEWALK
- MILLING & RESURFACING
- PROPOSED COLUMN (SEE STRUCTURAL PLANS)

SUBJECT TO CHANGE

W.L.L.	05-06					
Designed by	Date					
J.N.	05-06					
Drawn by	Date					
C.V.	05-02-06					
Checked by	Date					
M.A.B.	05-05-06					
Approved by	Date	No.	Date	By / Chk	App.	Revisions

NORTH CORRIDOR METRORAIL EXTENSION - PRELIMINARY ENGINEERING (100% SUBMITTAL)

ROADWAY

MIAMI-DADE COUNTY

MIAMI-DADE TRANSIT

PARSONS
7630 CORPORATE CENTER DRIVE, SUITE 500
MIAMI, FLORIDA 33126
PHONE: (786) 464-1000 FAX: (786) 845-7119
CERTIFICATE OF AUTHORIZATION NO. 1635

BND
CIVIL ENGINEERING • ENVIRONMENTAL • WATER • CONSTRUCTION MANAGEMENT • TRANSPORTATION
9200 NW 78 AVENUE, SUITE 400
MIAMI, FLORIDA 33006 - (305) 599-8495

Approved MICHAEL A. BUDALL, P.E. Date

ROADWAY PLANS

Scale 1" = 100' Drawing RWP-34 Sheet

5/11/2006 10:56:29 AM Z:\2006-02\Plots\RoadwayPlans\RWP-34.dgn

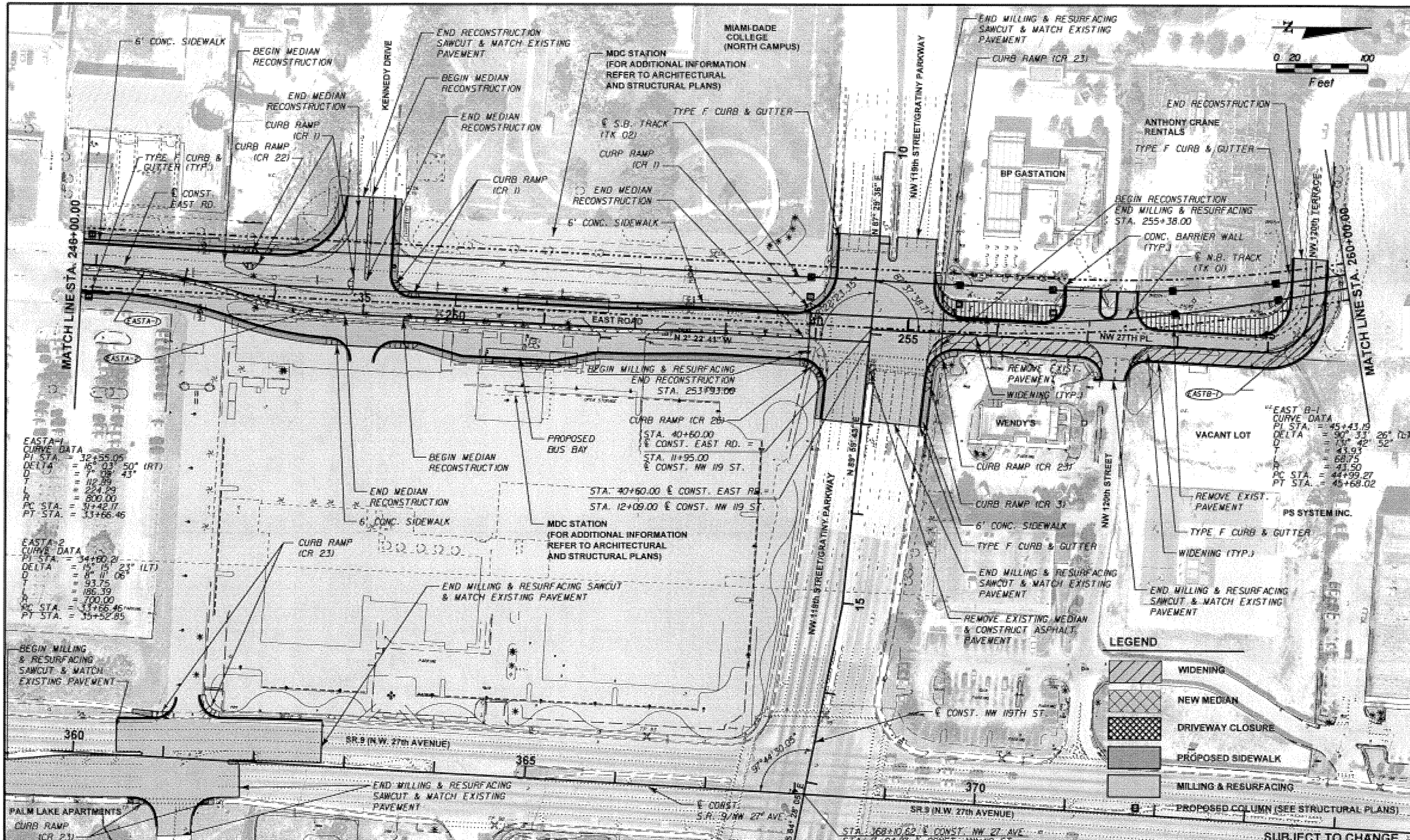

W.L.L.	05-06					
Designed by	Date					
J.N.	05-06					
Drawn by	Date					
C.V.	05-02-06					
Checked by	Date					
M.A.B.	05-05-06					
Approved by	Date	No.	Date	By	App.	Remarks

NORTH CORRIDOR METRORAIL EXTENSION - PRELIMINARY ENGINEERING (100% SUBMITTAL)

MIAMI-DADE COUNTY

MIAMI-DADE TRANSIT

PARSONS
7800 CORPORATE CENTER DRIVE, SUITE 500
MIAMI, FLORIDA 33126
PHONE: (786) 464-1000 FAX: (786) 845-7119
CERTIFICATE OF AUTHORIZATION NO. 1836

BND
CIVIL ENGINEERING • ENVIRONMENTAL • AIRPORT • CONSTRUCTION MANAGEMENT • TRANSPORTATION
1200 NW 78 AVENUE, SUITE 400
MIAMI, FLORIDA 33126 • (305) 599-8495

Approved | Date | Approved MICHAEL A. BUDALL, P.E. | Date

ROADWAY

ROADWAY PLANS

Scale 1" = 100' | Drawing RWP-35 | Sheet 95

N

0 20 100
Feet

NW 120th STREET

COUNTYWIDE OF MIAMI

GOLDCOAST FREIGHTWAYS

NW 123rd STREET

NW 28th AVENUE

℄ N.B. TRACK (TK 01)

℄ S.B. TRACK (TK 02)

MATCH LINE STA. 260+00.00

260

265

270

MATCH LINE STA. 274+00.00

2780 WAREHOUSES

DADE COUNTY BUS PARKING

NW 122nd STREET

MDC P.S JOHN H. SCHEE TRANSPORTATION CENTER

MIAMI-DADE COUNTY MAINTENANCE YARD

DENSE TREES

BRUSH

PALMS

PARKING

LEGEND

- WIDENING
- NEW MEDIAN
- DRIVEWAY CLOSURE
- PROPOSED SIDEWALK
- MILLING & RESURFACING
- PROPOSED COLUMN (SEE STRUCTURAL PLANS)

SUBJECT TO CHANGE

W.L.L. Designed by	05-06 Date					
J.N. Drawn by	05-06 Date					
C.V. Checked by	05-02-06 Date					
M.A.B. Approved by	05-05-06 Date	No.	Date	By / Chk	App.	Revisions

NORTH CORRIDOR METRORAIL EXTENSION - PRELIMINARY ENGINEERING (100% SUBMITTAL)

MIAMI-DADE COUNTY

MIAMI-DADE TRANSIT

PARSONS
7600 CORPORATE CENTER DRIVE, SUITE 500
MIAMI, FLORIDA 33126
PHONE: (786) 464-1000 FAX: (786) 845-7119
CERTIFICATE OF AUTHORIZATION NO. 1838
Approved — Date

BND
CIVIL ENGINEERING • ENVIRONMENTAL • AIRPORT • CONSTRUCTION MANAGEMENT • TRANSPORTATION
1200 NW 78 AVENUE, SUITE 400
MIAMI, FLORIDA 33126 - (305) 599-8495
Approved MICHAEL A. BUDALL, P.E. Date

ROADWAY

ROADWAY PLANS

Scale 1" = 100' | Drawing RWP-36 | Sheet 96

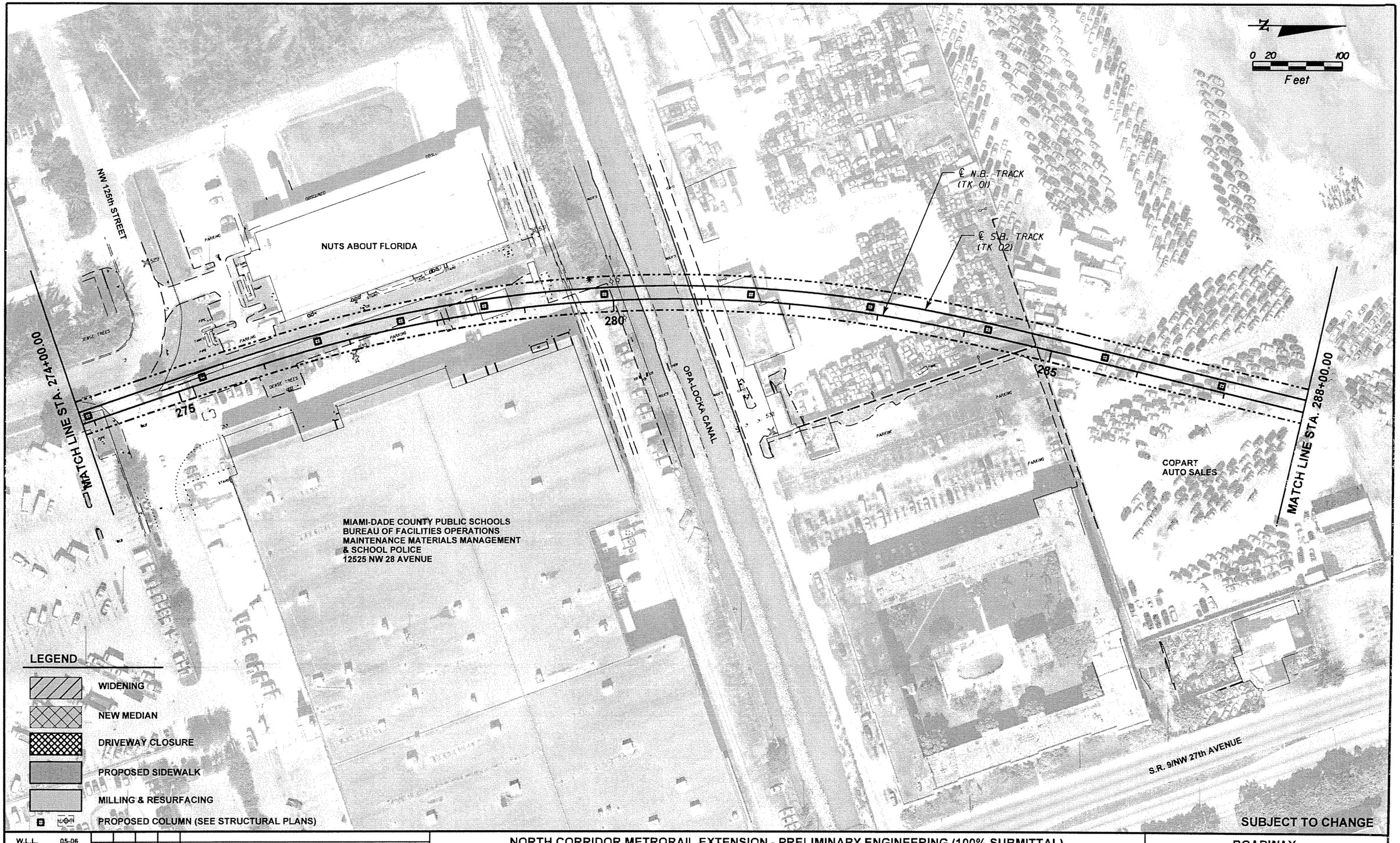

W.L.L.	05-06						
Designed by	Date						
J.N.	05-06						
Drawn by	Date						
C.V.	05-02-06						
Checked by	Date						
M.A.B.	05-05-06						
Approved by	Date	No.	Date	By / Chk	App.	Revisions	

NORTH CORRIDOR METRORAIL EXTENSION - PRELIMINARY ENGINEERING (100% SUBMITTAL)

MIAMI-DADE COUNTY

MIAMI-DADE TRANSIT

PARSONS
7600 CORPORATE CENTER DRIVE, SUITE 500
MIAMI, FLORIDA 33126
PHONE: (786) 464-1000 FAX: (786) 845-7119
CERTIFICATE OF AUTHORIZATION NO. 1838

Approved _____ Date _____

BND
CIVIL ENGINEERING • ENVIRONMENTAL • AIRPORT • CONSTRUCTION MANAGEMENT • TRANSPORTATION
1200 NW 78 AVENUE, SUITE 400
MIAMI, FLORIDA 33126 - (305) 599-8495

Approved MICHAEL A. BUDALL, P.E. Date _____

ROADWAY

ROADWAY PLANS

Scale 1" = 100' | Drawing RWP-37 | Sheet 97

N

0 20 100
Feet

℄ N.B. TRACK (TK 01)

℄ S.B. TRACK (TK 02)

END MILLING & RESURFACING SAWCUT & MATCH EXISTING PAVEMENT

TYPE F CURB AND GUTTER (TYP.)

PROPOSED 6' CONCRETE SIDEWALK

BEGIN MILLING & RESURFACING SAWCUT & MATCH EXISTING PAVEMENT

NW 132nd STREET

NW 131st STREET

WACHOVIA BANK

END MEDIAN RECONSTRUCTION

PAPA JOHN'S

CHURCH'S CHICKEN

LAUNDRO MART

MATCH LINE STA. 288+00.00

MATCH LINE STA. 302+00.00

410

S.R. 9/NW 27th AVENUE

290

300

VACANT LOT

BRYAN INTERNATIONAL CAR SALES

FLEA MARKET AUTO SALES

295

405

MANNY'S TIRES

BUGALU AUTO SHOP

UPPER RIO VISTA CANAL

CONC. BARRIER WALL (TYP.)

PROPOSED 6' CONCRETE SIDEWALK

NW 27th COURT

SUNCO GAS STATION

NW 131st STREET

END MILLING & RESURFACING SAWCUT & MATCH EXISTING PAVEMENT

BEGIN MEDIAN RECONSTRUCTION

℄ CONST. S.R. 9/NW 27 AVE.

EDWIN AUTO SALES

400

AMIRA MARKET & GROCERY

FAMILY MED CLINIC

LEGEND

- WIDENING
- NEW MEDIAN
- DRIVEWAY CLOSURE
- PROPOSED SIDEWALK
- MILLING & RESURFACING
- PROPOSED COLUMN (SEE STRUCTURAL PLANS)

SUBJECT TO CHANGE

W.L.L.	05-06						
Designed by	Date						
J.N.	05-06						
Drawn by	Date						
C.V.	05-02-06						
Checked by	Date						
M.A.B.	05-05-06						
Approved by	Date	No.	Date	By / Chk	App.	Revisions	

NORTH CORRIDOR METRORAIL EXTENSION - PRELIMINARY ENGINEERING (100% SUBMITTAL)

ROADWAY

MIAMI-DADE COUNTY

MIAMI-DADE TRANSIT

PARSONS
7600 CORPORATE CENTER DRIVE, SUITE 500
MIAMI, FLORIDA 33126
PHONE: (786) 464-1000 FAX: (786) 845-7119
CERTIFICATE OF AUTHORIZATION NO. 1838

Approved _____ Date _____

BND
CIVIL ENGINEERING • ENVIRONMENTAL • AIRPORT • CONSTRUCTION MANAGEMENT • TRANSPORTATION
1200 NW 78 AVENUE, SUITE 400
MIAMI, FLORIDA 33126 - (305) 599-8495

Approved MICHAEL A. BUDALL, P.E. Date _____

ROADWAY PLANS

Scale 1" = 100' | Drawing RWP-38 | Sheet 98

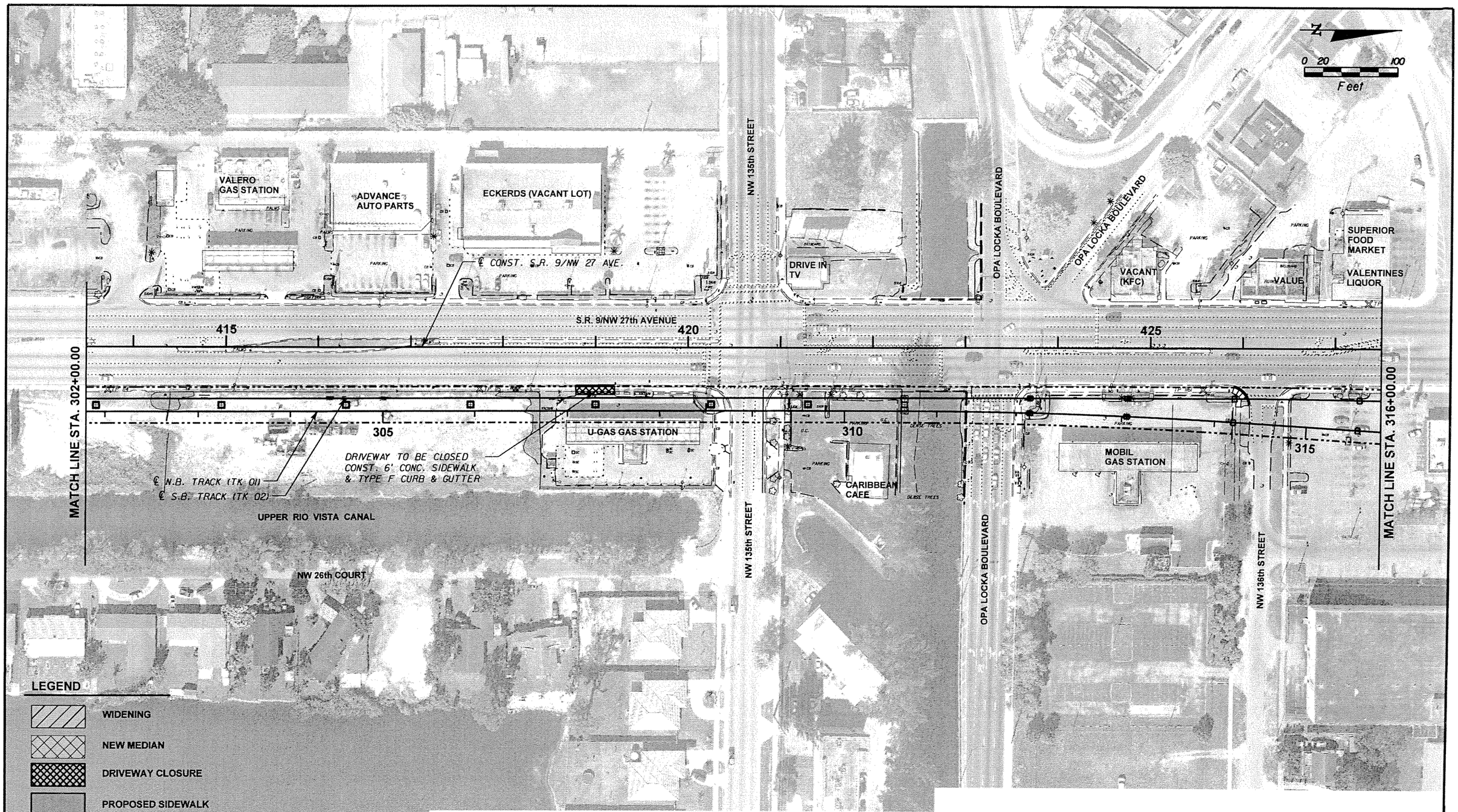

SUBJECT TO CHANGE

W.L.L. Designed by	05-06 Date					
J.N. Drawn by	05-06 Date					
C.V. Checked by	05-02-06 Date					
M.A.B. Approved by	05-05-06 Date	No.	Date	By / Chk	App.	Revisions

NORTH CORRIDOR METRORAIL EXTENSION - PRELIMINARY ENGINEERING (100% SUBMITTAL)

ROADWAY

MIAMI-DADE COUNTY

MIAMI-DADE TRANSIT

PARSONS
7600 CORPORATE CENTER DRIVE, SUITE 500
MIAMI, FLORIDA 33126
PHONE: (786) 464-1000 FAX: (786) 845-7119
CERTIFICATE OF AUTHORIZATION NO. 1838
Approved Date

BND
CIVIL ENGINEERING • ENVIRONMENTAL • AIRPORT • CONSTRUCTION MANAGEMENT • TRANSPORTATION
1200 NW 78 AVENUE, SUITE 400
MIAMI, FLORIDA 33126 - (305) 599-8495
Approved MICHAEL A. BUDALL, P.E. Date

ROADWAY PLANS

Scale 1" = 100' | Drawing RWP-39 | Sheet 99

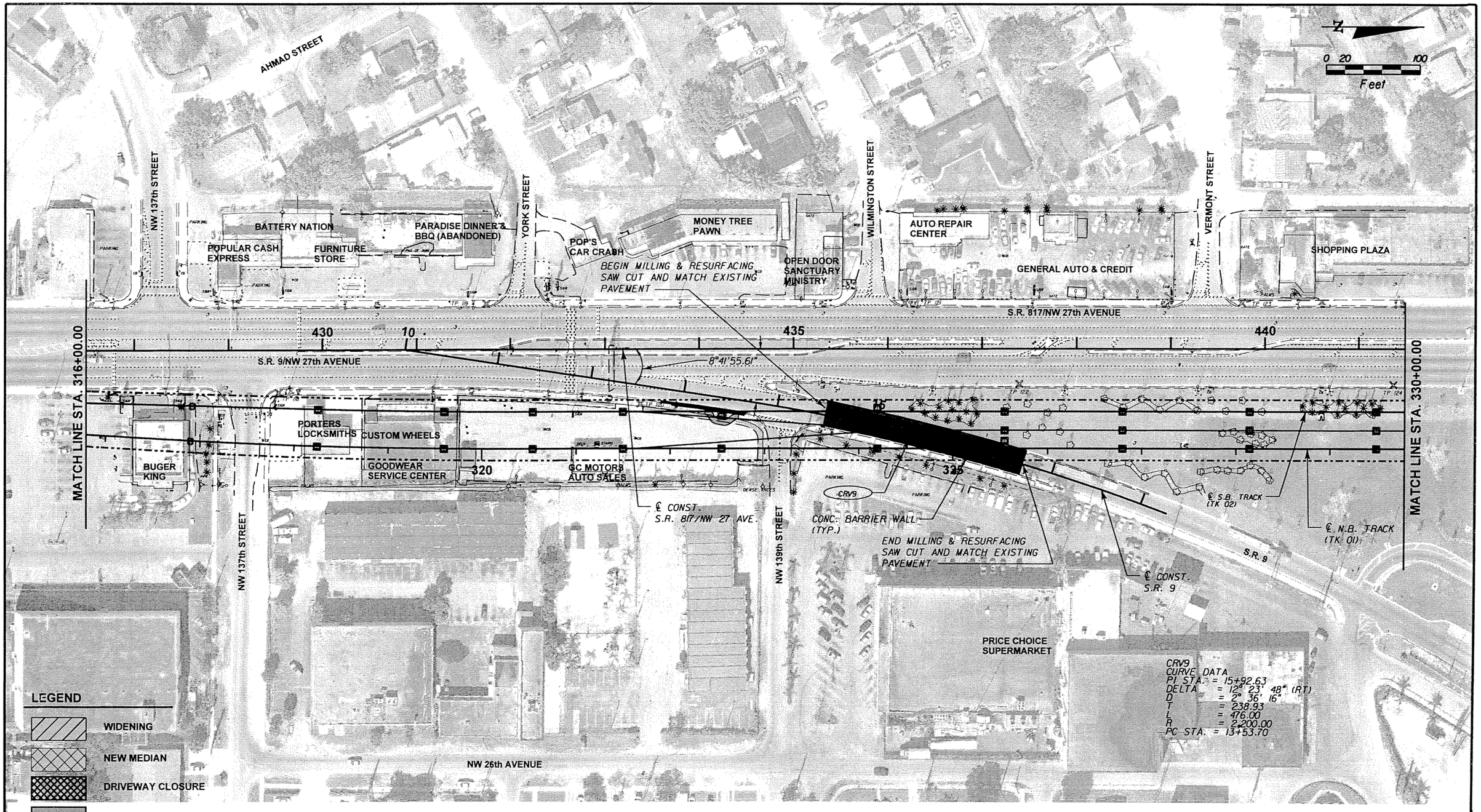

SUBJECT TO CHANGE

W.L.L. Designed by	05-06 Date					
J.N. Drawn by	05-06 Date					
C.V. Checked by	05-02-06 Date					
M.A.B. Approved by	05-05-06 Date	No.	Date	By / Chk	App.	Revisions

NORTH CORRIDOR METRORAIL EXTENSION - PRELIMINARY ENGINEERING (100% SUBMITTAL)

MIAMI-DADE COUNTY — MIAMI-DADE TRANSIT

PARSONS
7600 CORPORATE CENTER DRIVE, SUITE 500
MIAMI, FLORIDA 33126
PHONE: (786) 464-1000 FAX: (786) 845-7119
CERTIFICATE OF AUTHORIZATION NO. 1838
Approved ____ Date ____

BND
CIVIL ENGINEERING • ENVIRONMENTAL • AIRPORT • CONSTRUCTION MANAGEMENT • TRANSPORTATION
1200 NW 78 AVENUE, SUITE 400
MIAMI, FLORIDA 33126 - (305) 599-8495
Approved MICHAEL A. BUDALL, P.E. Date ____

ROADWAY

ROADWAY PLANS

Scale 1" = 100' | Drawing RWP-40 | Sheet 100

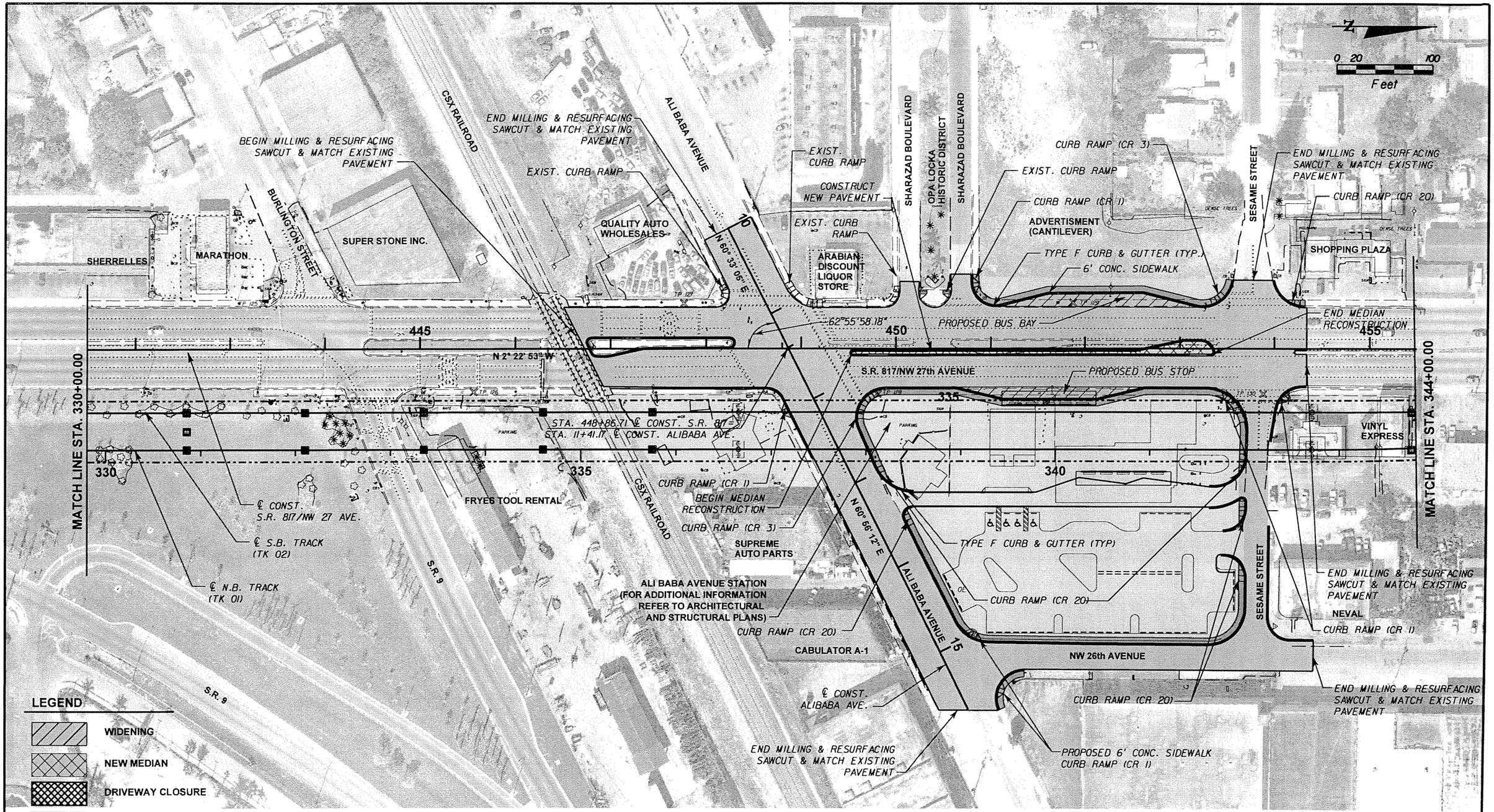

SUBJECT TO CHANGE

W.L.L. Designed by	05-06 Date					
J.N. Drawn by	05-06 Date					
C.V. Checked by	05-02-06 Date					
M.A.B. Approved by	05-05-06 Date	No.	Date	By / Chk	App.	Revisions

NORTH CORRIDOR METRORAIL EXTENSION - PRELIMINARY ENGINEERING (100% SUBMITTAL)

MIAMI-DADE COUNTY

MIAMI-DADE TRANSIT

PARSONS
7600 CORPORATE CENTER DRIVE, SUITE 500
MIAMI, FLORIDA 33126
PHONE: (786) 464-1000 FAX: (786) 845-7119
CERTIFICATE OF AUTHORIZATION NO. 1838
Approved Date

BND
CIVIL ENGINEERING • ENVIRONMENTAL • AIRPORT • CONSTRUCTION MANAGEMENT • TRANSPORTATION
1200 NW 78 AVENUE, SUITE 400
MIAMI, FLORIDA 33126 - (305) 599-8495
Approved MICHAEL A. BUDALL, P.E. Date

ROADWAY

ROADWAY PLANS

Scale 1" = 100' | Drawing RWP-41 | Sheet 10

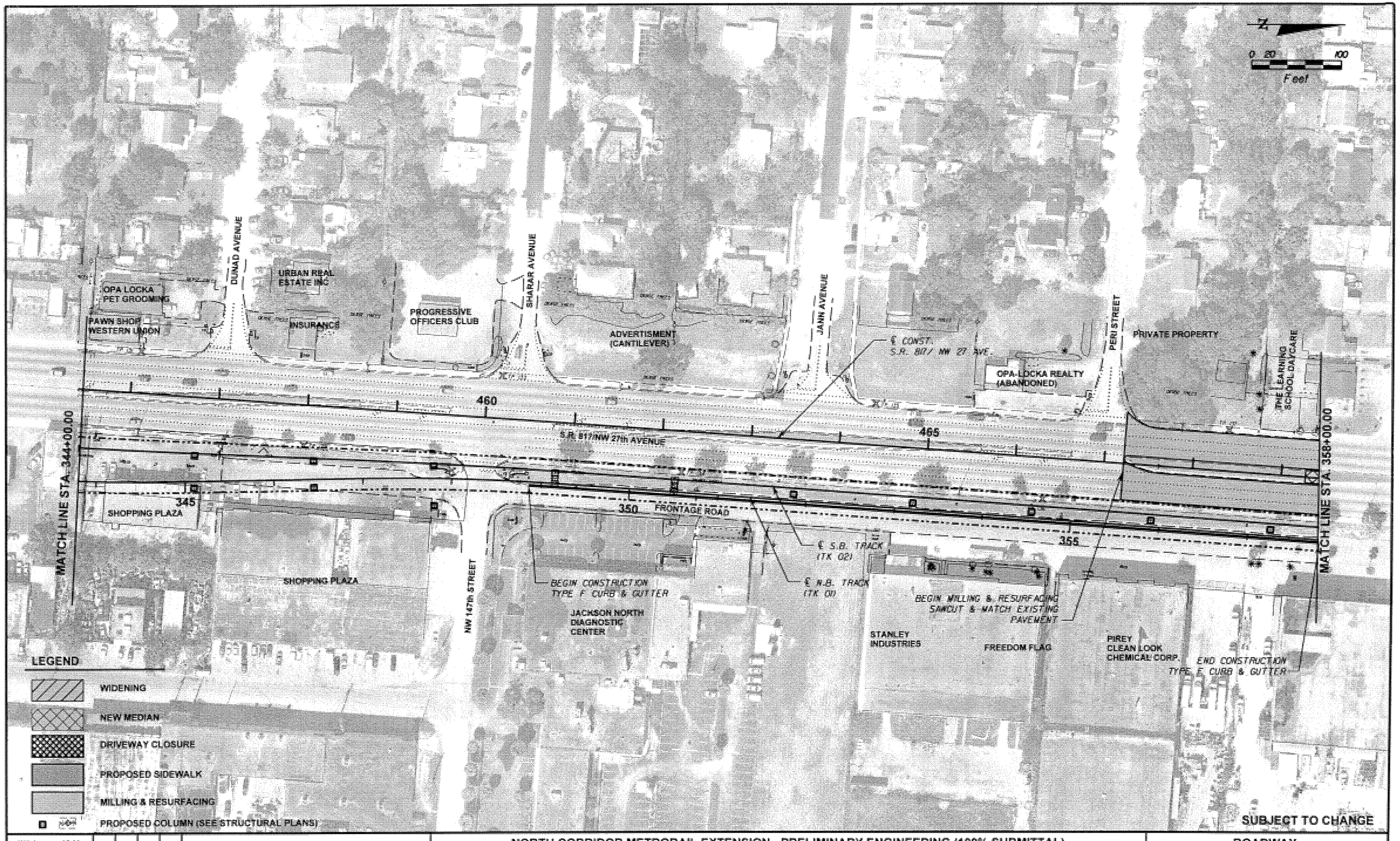

W.L.L.	05-06					
Designed by	Date					
J.N.	05-06					
Drawn by	Date					
C.V.	05-02-06					
Checked by	Date					
M.A.B.	05-05-06					
Approved by	Date	No.	Date	By / Chk.	App.	Revisions

NORTH CORRIDOR METRORAIL EXTENSION - PRELIMINARY ENGINEERING (100% SUBMITTAL)

ROADWAY

MIAMI-DADE COUNTY

MIAMI-DADE TRANSIT

PARSONS
7905 CORPORATE CENTER DRIVE, SUITE 500
MIAMI, FLORIDA 33126
PHONE: (786) 464-1000 FAX: (786) 845-7119
CERTIFICATE OF AUTHORIZATION NO. 1838

BND
CIVIL ENGINEERING • ENVIRONMENTAL • AIRPORT • CONSTRUCTION MANAGEMENT • TRANSPORTATION
1200 NW 78 AVENUE, SUITE 400
MIAMI, FLORIDA 33126 - (305) 599-8495

Approved _____ Date _____

Approved MICHAEL A. BUDALL, P.E. Date _____

ROADWAY PLANS

Scale 1" = 100' | Drawing RWP-42 | Sheet 07

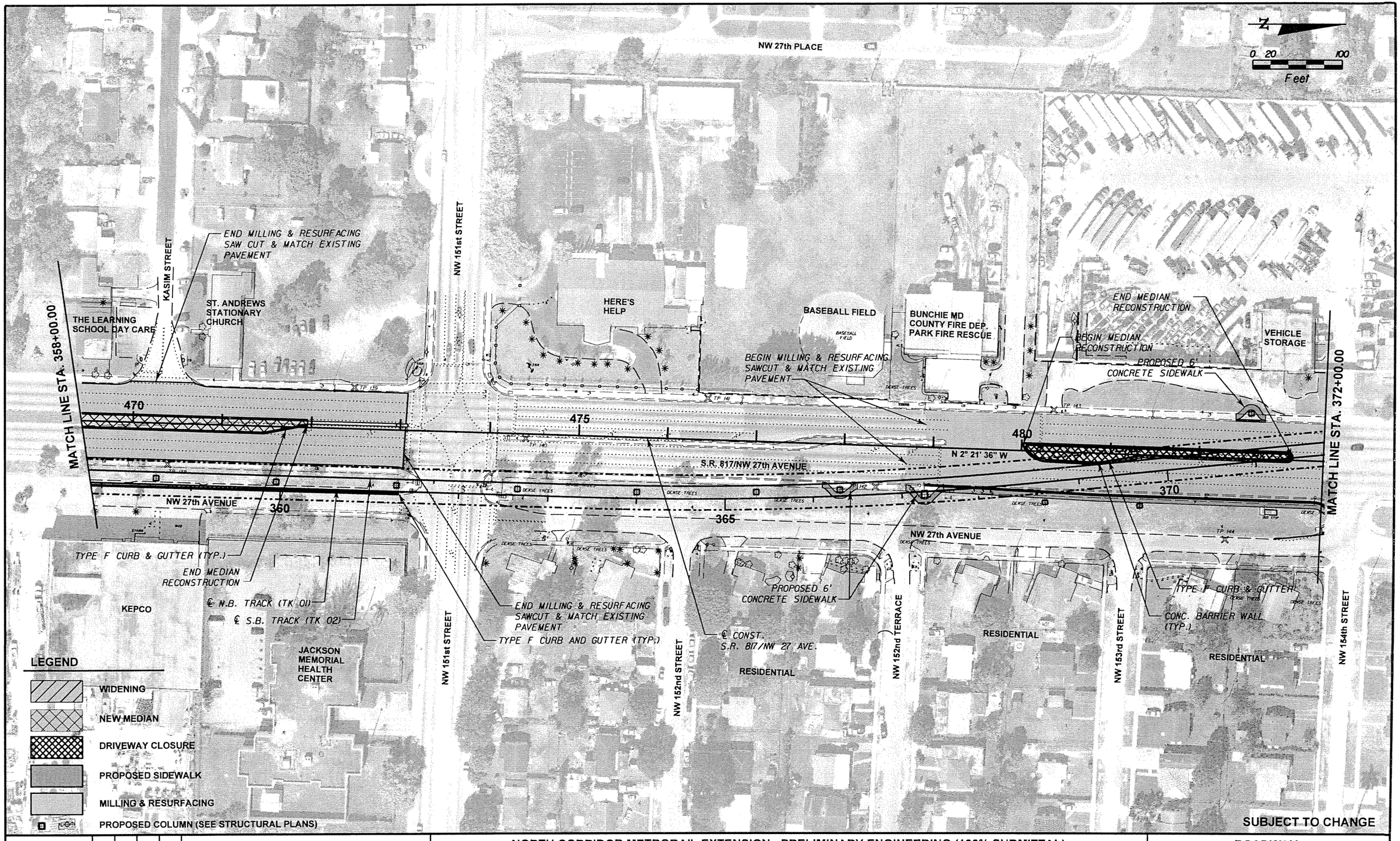

W.L.L. Designed by	05-06 Date					
J.N. Drawn by	05-06 Date					
C.V. Checked by	05-02-06 Date					
M.A.B. Approved by	05-05-06 Date	No.	Date	By / Chk	App.	Revisions

NORTH CORRIDOR METRORAIL EXTENSION - PRELIMINARY ENGINEERING (100% SUBMITTAL)

MIAMI-DADE COUNTY

MIAMI-DADE TRANSIT

PARSONS
7600 CORPORATE CENTER DRIVE, SUITE 500
MIAMI, FLORIDA 33126
PHONE: (786) 464-1000 FAX: (786) 845-7119
CERTIFICATE OF AUTHORIZATION NO. 1838

Approved Date

BND
CIVIL ENGINEERING • ENVIRONMENTAL • AIRPORT • CONSTRUCTION MANAGEMENT • TRANSPORTATION
1200 NW 78 AVENUE, SUITE 400
MIAMI, FLORIDA 33126 - (305) 599-8495

Approved MICHAEL A. BUDALL, P.E. Date

ROADWAY

ROADWAY PLANS

Scale 1" = 100' | Drawing RWP-43 | Sheet 103

N

0 20 100
Feet

NW 155th TERRACE

C-6 CANAL

NW 27th COURT

PUBLIC STORAGE

BEGIN MEDIAN RECONSTRUCTION

PROPOSED 6' CONCRETE SIDEWALK

THE TILE PLACE

PROPOSED 6' CONCRETE SIDEWALK

END MILLING & RESURFACING SAWCUT & MATCH EXISTING PAVEMENT

ADVERTISEMENT (CANTILEVER)

℄ N.B. TRACK (TK 01)

℄ S.B. TRACK (TK 02)

KFC

MATCH LINE STA. 372+00.00

MATCH LINE STA. 386+00.00

375 380 385

485 490 495

N 1° 54' 48" W

S.R. 817/NW 27th AVENUE

CONC. BARRIER WALL (TYP.)

NW 27th AVENUE

NW 154th STREET

C-8 CANAL

DRIVEWAY TO BE CLOSED CONST. 6" CONC. SIDEWALK & TYPE F CURB & GUTTER

END MEDIAN RECONSTRUCTION

END MILLING & RESURFACING SAWCUT & MATCH EXISTING PAVEMENT

℄ CONST. S.R. 817/NW 27th AVE.

NW 27th AVENUE

NW 155th STREET

NW 27th AVENUE

RESIDENTIAL

RESIDENTIAL

NW 26th AVENUE

SUBJECT TO CHANGE

LEGEND

- WIDENING
- NEW MEDIAN
- DRIVEWAY CLOSURE
- PROPOSED SIDEWALK
- MILLING & RESURFACING
- PROPOSED COLUMN (SEE STRUCTURAL PLANS)

W.L.L.	05-06					
Designed by	Date					
J.N.	05-06					
Drawn by	Date					
C.V.	05-02-06					
Checked by	Date					
M.A.B.	05-05-06					
Approved by	Date	No.	Date	By / Chk.	App.	Remarks

NORTH CORRIDOR METRORAIL EXTENSION - PRELIMINARY ENGINEERING (100% SUBMITTAL)

MIAMI-DADE COUNTY

MIAMI-DADE TRANSIT

PARSONS
7600 CORPORATE CENTER DRIVE, SUITE 500
MIAMI, FLORIDA 33126
PHONE: (786) 464-1000 FAX: (786) 845-7116
CERTIFICATE OF AUTHORIZATION NO. 1838

Approved | Date

BND
CIVIL ENGINEERING - ENVIRONMENTAL - AIRPORT - CONSTRUCTION MANAGEMENT - TRANSPORTATION
12000 NW 78 AVENUE, SUITE 400
MIAMI, FLORIDA 33126 - (305) 599-8495

Approved MICHAEL A. BUDALL, P.E. | Date

ROADWAY

ROADWAY PLANS

Scale 1" = 100' | Drawing RWP-44 | Sheet 104

N

0 20 100
Feet

NW 27th COURT

NW 27th COURT

NW 161th STREET

NW 153rd STREET STATION
(FOR ADDITIONAL INFROMATION
REFER TO ARCHITECTURAL AND
STRUCTURAL PLANS)

NW 159th STREET

WALGREENS

M&M
FOOD MART

DRIVEWAY TO BE
CLOSED

CURB RAMP
(CR 20)

℄ N.B. TRACK
(TK 00)

℄ S.B. TRACK
(TK 02)

PROPOSED 6'
CONCRETE SIDEWALK

MATCH LINE STA. 386+00.00

MATCH LINE STA. 400+00.00

500

390

505

390

195

510

S.R. 817/NW 27th AVENUE

NW 27th AVENUE

BEGIN MEDIAN
RECONSTRUCTION

EXIST. DRIVEWAY TO BE CLOSED
CONST. NEW 6' CONC. SIDEWALK
CONST. TYPE F CURB & GUTTER (TYP.)

NW 27th AVENUE

℄ CONST.
S.R. 817/NW 27 AVE.

BEGIN MILLING & RESURFACING
SAWCUT & MATCH EXISTING
PAVEMENT

PROPOSED BUS BAY

WIDENING

NW 160th STREET

RESIDENTIAL

RESIDENTIAL

LEGEND

WIDENING

NEW MEDIAN

DRIVEWAY CLOSURE

PROPOSED SIDEWALK

MILLING & RESURFACING

PROPOSED COLUMN (SEE STRUCTURAL PLANS)

SUBJECT TO CHANGE

W.L.L. Designed by	05-06 Date				
J.N. Drawn by	05-06 Date				
C.V. Checked by	05-02-06 Date				
M.A.B. Approved By	05-05-06 Date	No.	Date	By / Chk.	Appr. Revisions

NORTH CORRIDOR METRORAIL EXTENSION - PRELIMINARY ENGINEERING (100% SUBMITTAL)

MIAMI-DADE COUNTY

MIAMI-DADE TRANSIT

PARSONS
7400 CORPORATE CENTER DRIVE, SUITE 500
MIAMI, FLORIDA 33126
PHONE: (786) 454-1000 FAX: (786) 845-7119
CERTIFICATE OF AUTHORIZATION NO. 1836

Approved | Date

BND
CIVIL ENGINEERING • ENVIRONMENTAL • AIRPORT • CONSTRUCTION MANAGEMENT • TRANSPORTATION
1200 NW 78 AVENUE, SUITE 400
MIAMI, FLORIDA 33126 • (305) 599-8495

Approved MICHAEL A. BUDALL, P.E. | Date

6/6/2006 7:30:26 PM

ROADWAY

ROADWAY PLANS

Scale 1" = 100' | Drawing RWP-46 | Sheet 105

N

0 20 100
Feet

NW 164th STREET

NW 164th TERRACE

NW 27th COURT

FRONTAGE RD

END MILLING & RESURFACING SAWCUT & MATCH EXISTING PAVEMENT

℄ CONST. NW 163RD ST.

NW 163rd STREET

N1°56'37" E

CURB RAMP (CR 21)

TYPE F CURB & GUTTER (TYP.)

CURB RAMP (CR 22)

CURB RAMP (CR 1)

NW 27th COURT

NW 163rd STREET STATION (FOR ADDITIONAL INFORMATION REFER TO ARCHITECTURAL AND STRUCTURAL PLANS)

END MILLING & RESURFACING SAWCUT & MATCH EXISTING PAVEMENT

CURB RAMP (CR 3)

NW 163rd STREET STATION (FOR ADDITIONAL INFORMATION REFER TO ARCHITECTURAL AND STRUCTURAL PLANS)

DADE'S CORNER PLAZA

CURB RAMP (CR 11)

CONSTRUCT NEW DRIVEWAY

PROPOSED 6' CONCRETE SIDEWALK

6' CONC. SIDEWALK

CURB RAMP (CR 3)

℄ S.B. TRACK (TK 02)

CISCO'S CAR WASH

℄ N.B. TRACK (TK 01)

MATCH LINE STA. 400+00.00

89°39'8.57"

515

520

410

525

MATCH LINE STA. 414+00.00

N1°57'01" W

STA. 513+29.25 ℄ CONST. NW 27 AVE.
STA. 14+03.00 ℄ CONST. NW 163 ST.

OVERHEAD TRUSS

S.R. 817/NW 27th AVENUE

CONC. BARRIER WALL (TYP.)

HAPPY PLACE TO EAT

NW 27th AVENUE

WIDENING

FATHER & SON FUNERAL

END MILLING & RESURFACING SAWCUT & MATCH EXISTING PAVEMENT

NW 163rd STREET

NW 164th STREET

NW 165th TERRACE

NW 166th STREET

NW 167th STREET

℄ CONST. S.R. 817/NW27 AVE.

NEMOS FISH MARKET

PROPOSED BUS BAY

6' CONC. SIDEWALK

ANDY'S PLACE

CURB RAMP (CR 3)

ONE PRICE AUTO

D'S COLD SPOT

SHOPPING PLAZA

SUN PLAZA

CURB RAMP (CR 20)

CURB RAMP (CR 1)

END MILLING & RESURFACING SAWCUT & MATCH EXISTING PAVEMENT

TYPE F CURB & GUTTER (TYP.)

END MILLING & RESURFACING SAWCUT & MATCH EXISTING PAVEMENT

LEGEND

WIDENING

NEW MEDIAN

DRIVEWAY CLOSURE

PROPOSED SIDEWALK

MILLING & RESURFACING

LOT PROPOSED COLUMN (SEE STRUCTURAL PLANS)

SUBJECT TO CHANGE

W.L.L. Designed by	05-06 Date						
J.N. Drawn by	05-06 Date						
C.V. Checked by	05-02-06 Date						
M.A.B. Approved by	05-05-06 Date	No.	Date	By / Chkd	App.	Revisions	

NORTH CORRIDOR METRORAIL EXTENSION - PRELIMINARY ENGINEERING (100% SUBMITTAL)

ROADWAY

MIAMI-DADE COUNTY

MIAMI-DADE TRANSIT

PARSONS
7500 CORPORATE CENTER DRIVE, SUITE 500
MIAMI, FLORIDA 33126
PHONE: (786) 464-1000 FAX: (786) 845-7119
CERTIFICATE OF AUTHORIZATION NO. 1836

Approved

Date

BND
CIVIL ENGINEERING · ENVIRONMENTAL · AIRPORT · CONSTRUCTION MANAGEMENT · TRANSPORTATION
1200 NW 78 AVENUE, SUITE 400
MIAMI, FLORIDA 33126 · (305) 599-8455

Approved MICHAEL A. BUDALL, P.E.

Date 5/8/2006 7:30:48 PM

ROADWAY PLANS

Scale 1" = 100'

Drawing RWP-46

Sheet 67

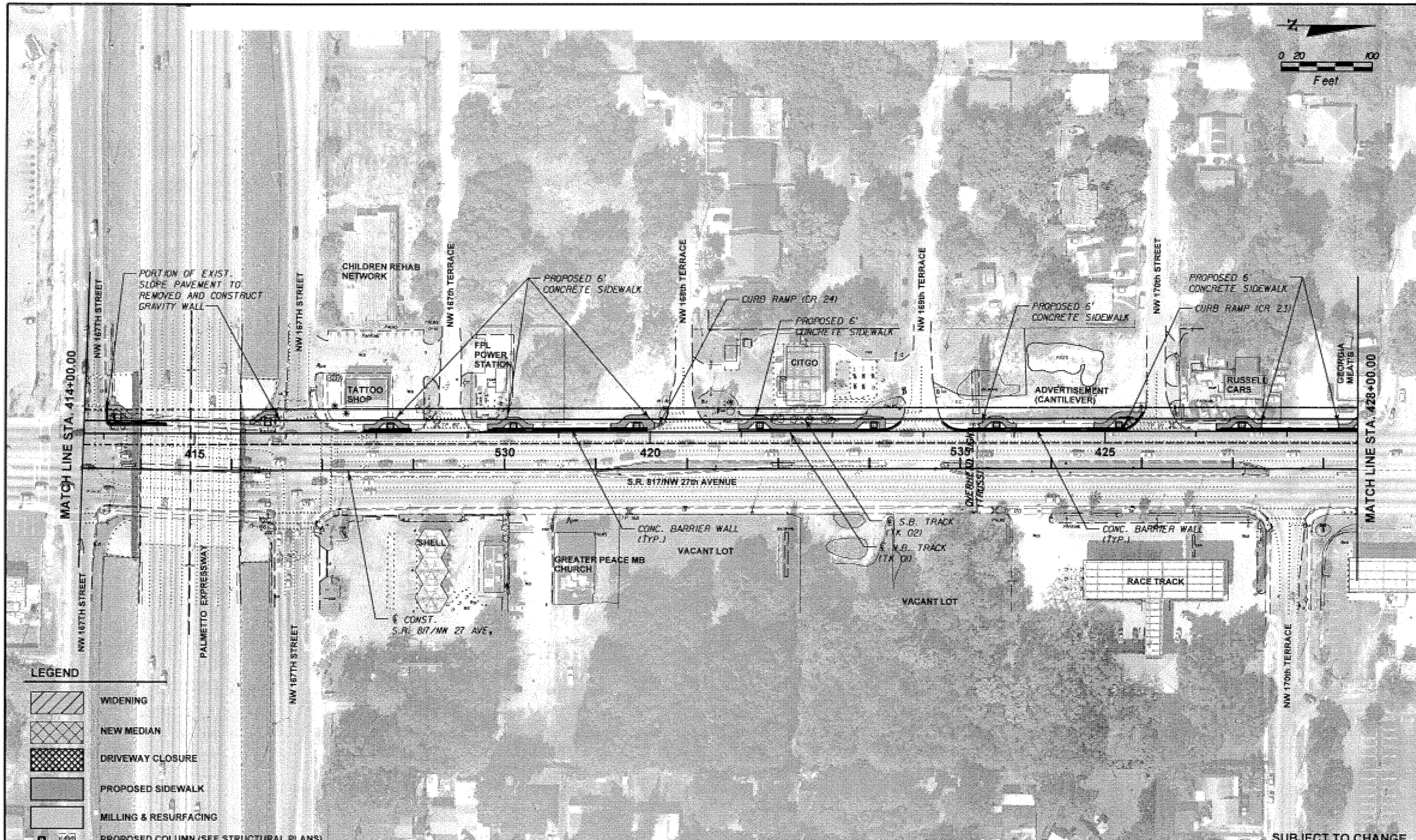

W.L.L. Designed by	05-06 Date					
J.N. Drawn by	05-06 Date					
C.V. Checked by	05-02-06 Date					
M.A.B. Approved by	05-06-06 Date	No.	Date	By	App.	Revisions

NORTH CORRIDOR METRORAIL EXTENSION - PRELIMINARY ENGINEERING (100% SUBMITTAL)

MIAMI-DADE COUNTY

MIAMI-DADE TRANSIT

PARSONS
7600 CORPORATE CENTER DRIVE, SUITE 500
MIAMI, FLORIDA 33126
PHONE: (786) 464-1000 FAX: (786) 845-7119
CERTIFICATE OF AUTHORIZATION NO. 1835

BND
CIVIL ENGINEERING • ENVIRONMENTAL • AIRPORT • CONSTRUCTION MANAGEMENT • TRANSPORTATION
1200 NW 78 AVENUE, SUITE 400
MIAMI, FLORIDA 33126 - (305) 599-8495

Approved | Date

Approved MICHAEL A. BUDALL, P.E. | Date

ROADWAY

ROADWAY PLANS

Scale 1" = 100' | Drawing RWP-47 | Sheet 107

5/02/2006 7:31:06 PM

N

0 20 100
Feet

NW 171st TERRACE
NW 172nd TERRACE
NW 174th STREET
NW 27th COURT
NW 171st STREET
NW 173rd TERRACE
NW 175th STREET

PROPOSED 6' CONCRETE SIDEWALK
CURB RAMP TCR 3
CONSTRUCT TYPE F CURB AND GUTTER
℄ N.B. TRACK (TK 01)
℄ S.B. TRACK (TK 02)
SPIRIT OF EXCELLENCE SERVICE
END MILLING & RESURFACING SAWCUT & MATCH EXISTING PAVEMENT
BUSINESS & RESIDENTIAL
CONSTRUCT TYPE F CURB & GUTTER

FRONTAGE ROAD
FRONTAGE ROAD

MATCH LINE STA. 428+00.00
540
430
545
435
550
440
MATCH LINE STA. 442+00.00
N 2° 50' 53" W

TYPE 'F' CURB & GUTTER (TYP.)
HESS (CLOSED)
BEGIN MILLING & RESURFACING SAWCUT & MATCH EXISTING PAVEMENT
℄ CONST. S.R. 817/NW 27 AVE.
CONC. BARRIER WALL (TYP.)
DOLPHIN PLAZA
S.R. 817/NW 27th AVENUE
DENTAL HEALTH GROUP
CLEARVIEW CENTER
ADULT STORE
END MILLING & RESURFACING SAWCUT & MATCH EXISTING PAVEMENT
ROYAL FUNERAL
CHURCH'S CHICKEN
END MILLING & RESURFACING SAWCUT & MATCH EXISTING PAVEMENT
CONC. BARRIER WALL (TYP.)
NW 175th STREET

LEGEND

- WIDENING
- NEW MEDIAN
- DRIVEWAY CLOSURE
- PROPOSED SIDEWALK
- MILLING & RESURFACING
- PROPOSED COLUMN (SEE STRUCTURAL PLANS)

SUBJECT TO CHANGE

W.L.L. Designed by	05-06 Date					
J.N. Drawn by	05-06 Date					
C.V. Checked by	05-02-06 Date					
M.A.B. Approved by	05-05-06 Date	No.	Date	By / Chk	App.	Revisions

NORTH CORRIDOR METRORAIL EXTENSION - PRELIMINARY ENGINEERING (100% SUBMITTAL)

MIAMI-DADE COUNTY
MIAMI-DADE TRANSIT

PARSONS
7600 CORPORATE CENTER DRIVE, SUITE 500
MIAMI, FLORIDA 33126
PHONE: (786) 464-1000 FAX: (786) 845-7119
CERTIFICATE OF AUTHORIZATION NO. 1638

BND
CIVIL ENGINEERING • ENVIRONMENTAL • AIRPORT • CONSTRUCTION MANAGEMENT • TRANSPORTATION
12000 NW 78 AVENUE, SUITE 400
MIAMI, FLORIDA 33126 • (305) 599-8490

Approved | Date
Approved MICHAEL A. BUDALL, P.E. | Date

ROADWAY

ROADWAY PLANS

Scale 1" = 100' | Drawing RWP-48 | Sheet 109

5/9/2006 7:31:22 PM c:\2006-02\projects\roadway\plans\25.dgn

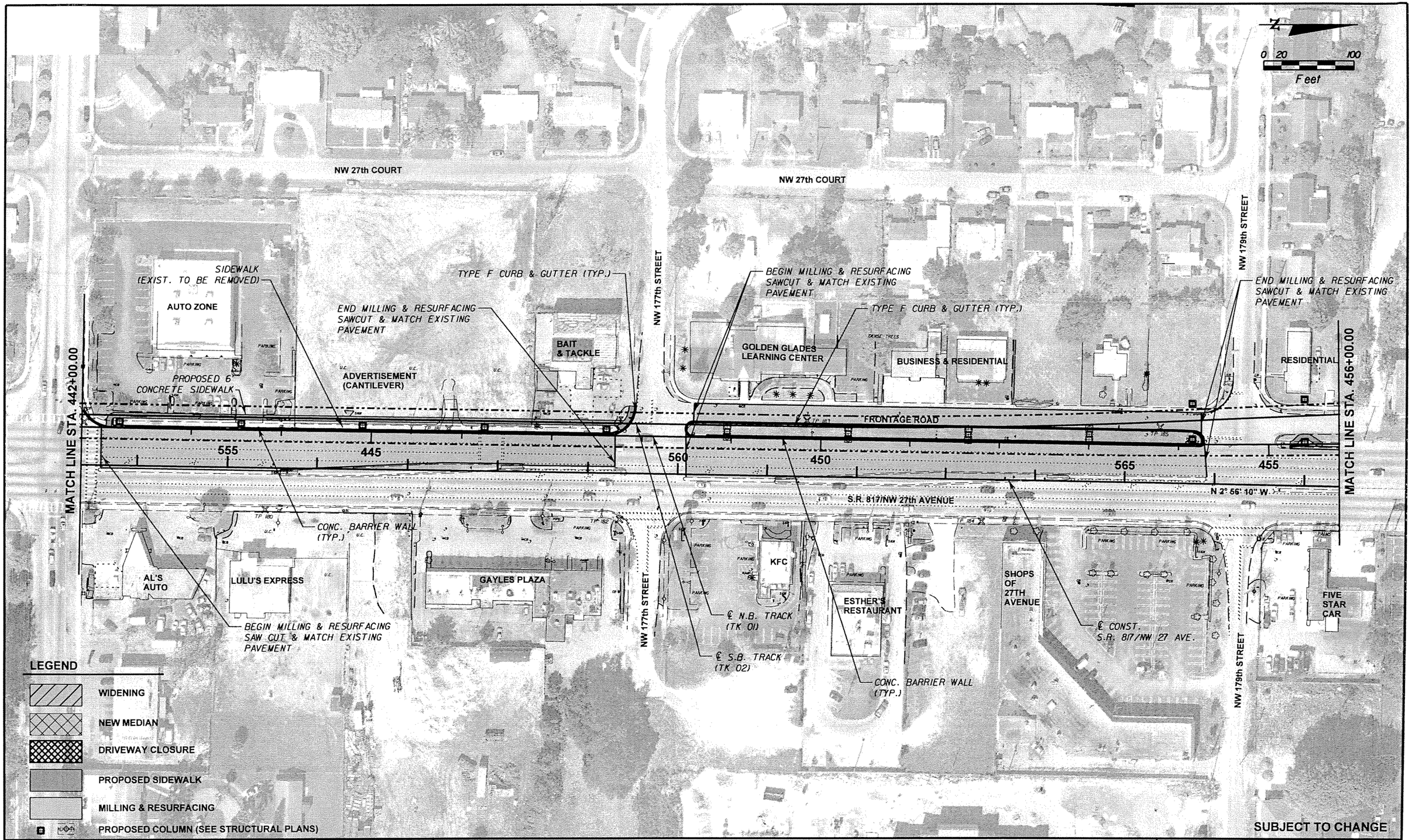

W.L.L. Designed by	05-06 Date					
J.N. Drawn by	05-06 Date					
C.V. Checked by	05-02-06 Date					
M.A.B. Approved by	05-05-06 Date	No.	Date	By / Chk	App.	Revisions

NORTH CORRIDOR METRORAIL EXTENSION - PRELIMINARY ENGINEERING (100% SUBMITTAL)

ROADWAY

MIAMI-DADE COUNTY

MIAMI-DADE TRANSIT

PARSONS
7600 CORPORATE CENTER DRIVE, SUITE 500
MIAMI, FLORIDA 33126
PHONE: (786) 464-1000 FAX: (786) 845-7119
CERTIFICATE OF AUTHORIZATION NO. 1838

Approved _____ Date _____

BND
CIVIL ENGINEERING • ENVIRONMENTAL • AIRPORT • CONSTRUCTION MANAGEMENT • TRANSPORTATION
1200 NW 78 AVENUE, SUITE 400
MIAMI, FLORIDA 33126 - (305) 599-8495

Approved MICHAEL A. BUDALL, P.E. Date 5/8/2006

ROADWAY PLANS

Scale 1" = 100' | Drawing RWP-49 | Sheet 109

7:31:38 PM z:\2005-02\project\roadway\planrd26.dgn

CAROL CITY CENTER

N

0 20 100
Feet

℄ CONST.
MIAMI GARDENS DR.

DRIVEWAY TO BE CLOSED
CONST. 6' CONC. SIDEWALK
CONST. TYPE F CURB & GUTTER

NW 183rd STREET STATION
(FOR ADDITIONAL INFORMATION
REFER TO ARCHITECTURAL
AND STRUCTURAL PLANS)

TYPE F CURB & GUTTER (TYP.)

CURB RAMP (CR 20)

℄ N.B. TRACK
(TK 01)

℄ S.B. TRACK
(TK 02)

PROP. 6' CONC. SIDEWALK

VALERO GAS

FURNITURE POWER

TACO BELL

MATCH LINE STA. 456+00.00

460

570

460

575

465

465

580

S.R. 817/NW 27th AVENUE

MIAMI GARDENS DRIVE

N 87° 30' 16" E

15

MATCH LINE STA. 470+00.00

CONC. BARRIER WALL (TYP.)

℄ CONST.
S.R. 817/NW 27 AVE.

CURB RAMP (CR 20)

TYPE F CURB & GUTTER (TYP.)

CURB RAMP (CR 03)

CURB RAMP (CR 03)

FIVE STAR CAR

BURGER KING

NEIGHBOR PLAZA

TYPE F CURB & GUTTER

CONSUMERS MEAT

WENDY'S

JIFFY LUBE

EASY RENTAL COIN LAUNDRY

PAYLESS SHOES

MOBIL

STA. 579+50.26 ℄ CONST. NW 27 AVE. =
STA. 14+57.67) CONST. MIAMI GARDENS DRIVE

LEGEND

- WIDENING
- NEW MEDIAN
- DRIVEWAY CLOSURE
- PROPOSED SIDEWALK
- MILLING & RESURFACING
- PROPOSED COLUMN (SEE STRUCTURAL PLANS)

SUBJECT TO CHANGE

W.L.L.	05-05					
Designed by	Date					
J.N.	05-05					
Drawn by	Date					
C.V.	05-02-06					
Checked by	Date					
M.A.B.	05-05-06					
Approved by	Date	No.	Date	By / Chk.	App.	Revisions

NORTH CORRIDOR METRORAIL EXTENSION - PRELIMINARY ENGINEERING (100% SUBMITTAL)

MIAMI-DADE COUNTY

MIAMI-DADE TRANSIT

PARSONS
7900 CORPORATE CENTER DRIVE, SUITE 500
MIAMI, FLORIDA 33126
PHONE: (786) 464-1000 FAX: (786) 845-7119
CERTIFICATE OF AUTHORIZATION NO. 1838

BND
CIVIL ENGINEERING • ENVIRONMENTAL • AIRPORT • CONSTRUCTION MANAGEMENT • TRANSPORTATION
1200 NW 78 AVENUE, SUITE 400
MIAMI, FLORIDA 33126 - (305) 599-8495

Approved: MICHAEL A. BUDALL, P.E. Date:

ROADWAY

ROADWAY PLANS

Scale: 1" = 100' | Drawing: RWP-50 | Sheet: 110

J:\2005-03\roadway\sheets\rwp50.dgn 6/6/2006 1:31:08 PM

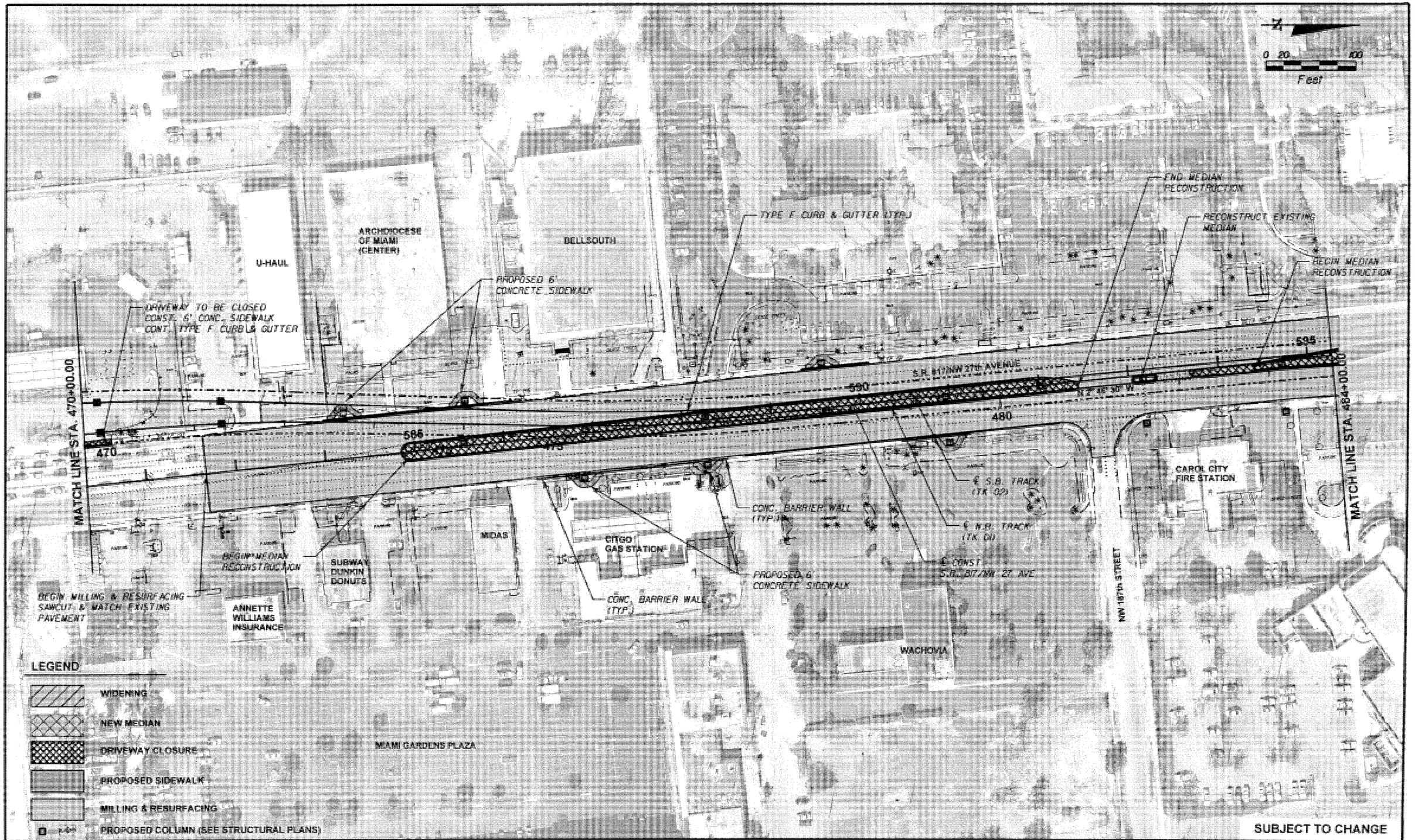

W.L.L. Designed by	05-06 Date						
J.N. Drawn by	05-06 Date						
C.V. Checked by	05-02-06 Date						
M.A.B. Approved by	05-05-06 Date	No.	Date	By / Chk	App.	Revisions	

NORTH CORRIDOR METRORAIL EXTENSION - PRELIMINARY ENGINEERING (100% SUBMITTAL)

ROADWAY

MIAMI-DADE COUNTY

MIAMI-DADE TRANSIT

PARSONS
7600 CORPORATE CENTER DRIVE, SUITE 500
MIAMI, FLORIDA 33126
PHONE: (786) 464-1000 FAX: (786) 845-7119
CERTIFICATE OF AUTHORIZATION NO. 1638

BND
CIVIL ENGINEERING • ENVIRONMENTAL • AIRPORT • CONSTRUCTION MANAGEMENT • TRANSPORTATION
1200 NW 78 AVENUE, SUITE 400
MIAMI, FLORIDA 33126 - (305) 599-8495

Approved | Date

Approved MICHAEL A. BUDALL, P.E. | Date 5/8/2006 7:33:17 PM | J:\2006-02\Construction\Roadway\Roadway02.dgn

Scale 1" = 100' | Drawing RWP-61 | Sheet

ROADWAY PLANS

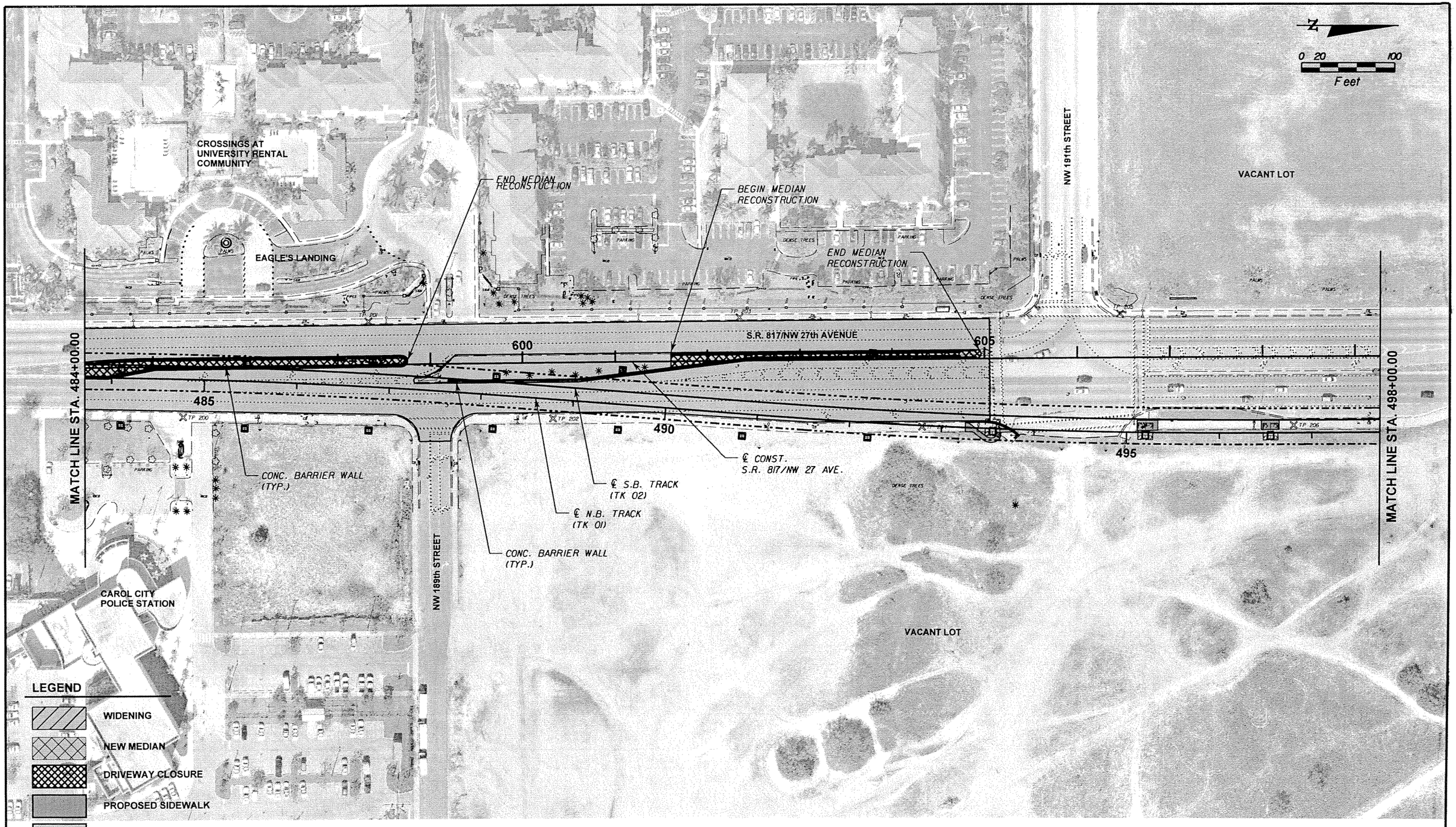

LEGEND

- WIDENING
- NEW MEDIAN
- DRIVEWAY CLOSURE
- PROPOSED SIDEWALK
- MILLING & RESURFACING
- PROPOSED COLUMN (SEE STRUCTURAL PLANS)

SUBJECT TO CHANGE

W.L.L. Designed by	05-06 Date					
J.N. Drawn by	05-06 Date					
C.V. Checked by	05-02-06 Date					
M.A.B. Approved by	05-05-06 Date	No.	Date	By / Chk	App.	Revisions

NORTH CORRIDOR METRORAIL EXTENSION - PRELIMINARY ENGINEERING (100% SUBMITTAL)

MIAMI-DADE COUNTY — MIAMI-DADE TRANSIT

PARSONS
7500 CORPORATE CENTER DRIVE, SUITE 500
MIAMI, FLORIDA 33126
PHONE: (786) 454-1000 FAX: (786) 845-7119
CERTIFICATE OF AUTHORIZATION NO. 1838

Approved _____ Date _____

BND
CIVIL ENGINEERING • ENVIRONMENTAL • AIRPORT • CONSTRUCTION MANAGEMENT • TRANSPORTATION
1200 NW 78 AVENUE, SUITE 400
MIAMI, FLORIDA 33126 - (305) 599-8495

Approved MICHAEL A. BUDALL, P.E. Date 5/8/2006 7:32:32 PM

ROADWAY

ROADWAY PLANS

Scale 1" = 100' | Drawing RWP-52 | Sheet 12

z:\2005-02\project\roadway\planrd29.dgn

VACANT LOT

N

0 20 40
Feet

S.R. 817/NW 27th AVENUE

610 615 620

N 2° 46' 11" W

500 505 510

MATCH LINE STA. 498+00.00

MATCH LINE STA. 512+00.00

℄ S.B. TRACK (TK 02)

℄ N.B. TRACK (TK 01)

℄ CONST. S.R. 817/NW 27 AVE.

PROPOSED 6' CONCRETE SIDEWALK

FUTURE WALMART DRIVEWAY

VACANT LOT
(FUTURE WALMART SITE)

LEGEND

- WIDENING
- NEW MEDIAN
- DRIVEWAY CLOSURE
- PROPOSED SIDEWALK
- MILLING & RESURFACING
- PROPOSED COLUMN (SEE STRUCTURAL PLANS)

SUBJECT TO CHANGE

W.L.L. Designed by	05-06 Date						
J.N. Drawn by	05-06 Date						
C.V. Checked by	05-02-06 Date						
M.A.B. Approved by	05-05-06 Date	No.	Date	By / Chk	App.	Revisions	

NORTH CORRIDOR METRORAIL EXTENSION - PRELIMINARY ENGINEERING (100% SUBMITTAL)

MIAMI-DADE COUNTY

MIAMI-DADE TRANSIT

PARSONS
7600 CORPORATE CENTER DRIVE, SUITE 600
MIAMI, FLORIDA 33126
PHONE: (786) 464-1000 FAX: (786) 845-7119
CERTIFICATE OF AUTHORIZATION NO. 1858

Approved _____ Date _____

BND
CIVIL ENGINEERING · ENVIRONMENTAL · AIRPORT · CONSTRUCTION MANAGEMENT · TRANSPORTATION
1200 NW 78 AVENUE, SUITE 400
MIAMI, FLORIDA 33126 · (305) 599-8495

Approved MICHAEL A. BUDALL, P.E. Date 5/8/2006 7:32:47 PM

ROADWAY

ROADWAY PLANS

Scale 1" = 100' Drawing RWP-53 Sheet 113

c:\2006-02\project\roadway\plans\rd30.dgn

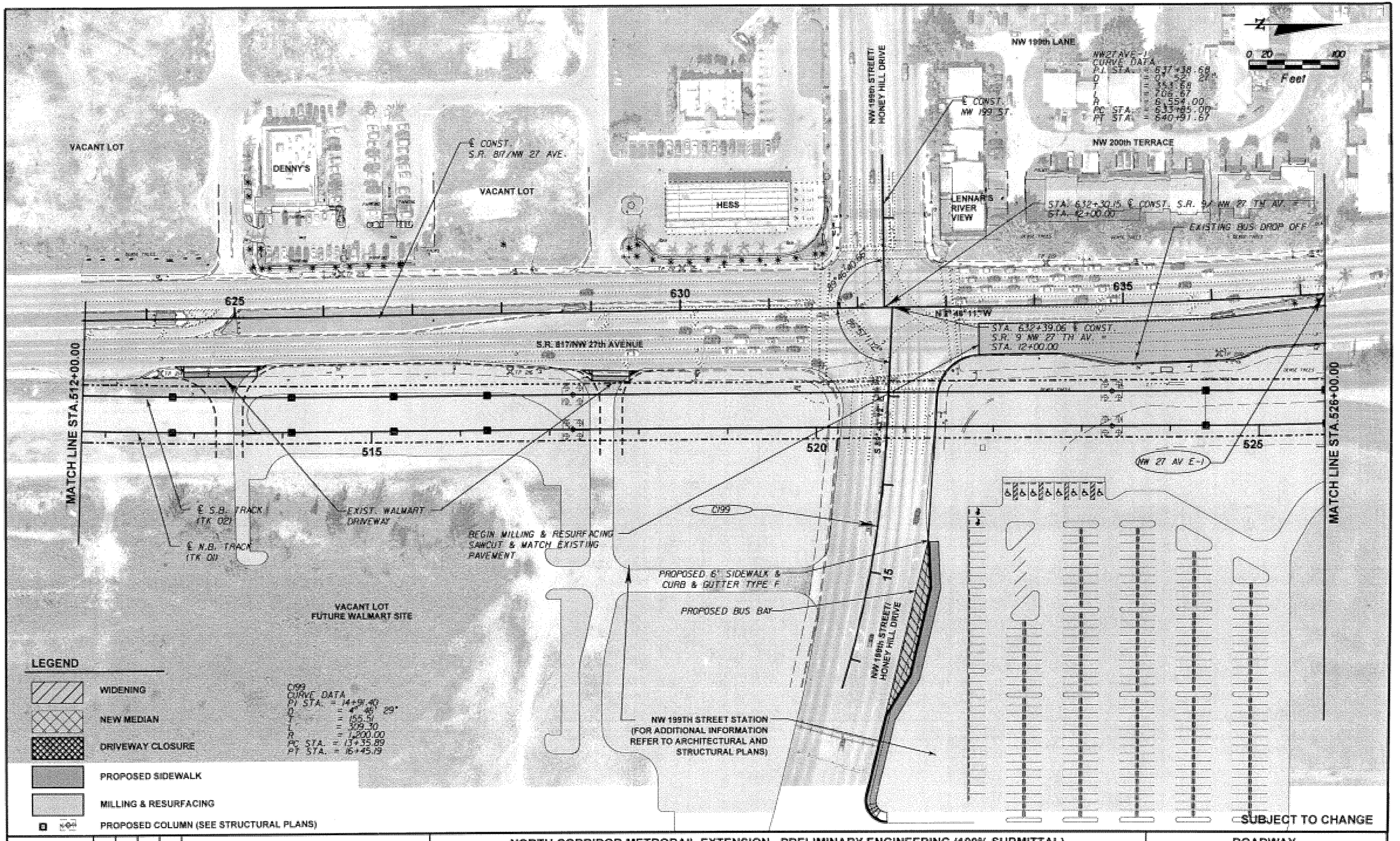

W.L.L.	05-06				
J.N.	05-06				
C.V.	05-02-06				
M.A.B.	05-05-06				

NORTH CORRIDOR METRORAIL EXTENSION - PRELIMINARY ENGINEERING (100% SUBMITTAL)

MIAMI-DADE COUNTY

MIAMI-DADE TRANSIT

PARSONS
7600 CORPORATE CENTER DRIVE, SUITE 600
MIAMI, FLORIDA 33126
PHONE: (786) 454-1000 FAX: (786) 845-7119
CERTIFICATE OF AUTHORIZATION NO. 1838

BND
CIVIL ENGINEERING · ENVIRONMENTAL · AIRPORT · CONSTRUCTION MANAGEMENT · TRANSPORTATION
1200 NW 78 AVENUE, SUITE 400
MIAMI, FLORIDA 33126 · (305) 599-8495

Approved MICHAEL A. BUDALL, P.E. Date

ROADWAY

ROADWAY PLANS

Scale 1" = 100' Drawing RWP-54 Sheet

5/8/2006 7:33:10 PM z:\2005-02\project\roadway\plans\21.dgn

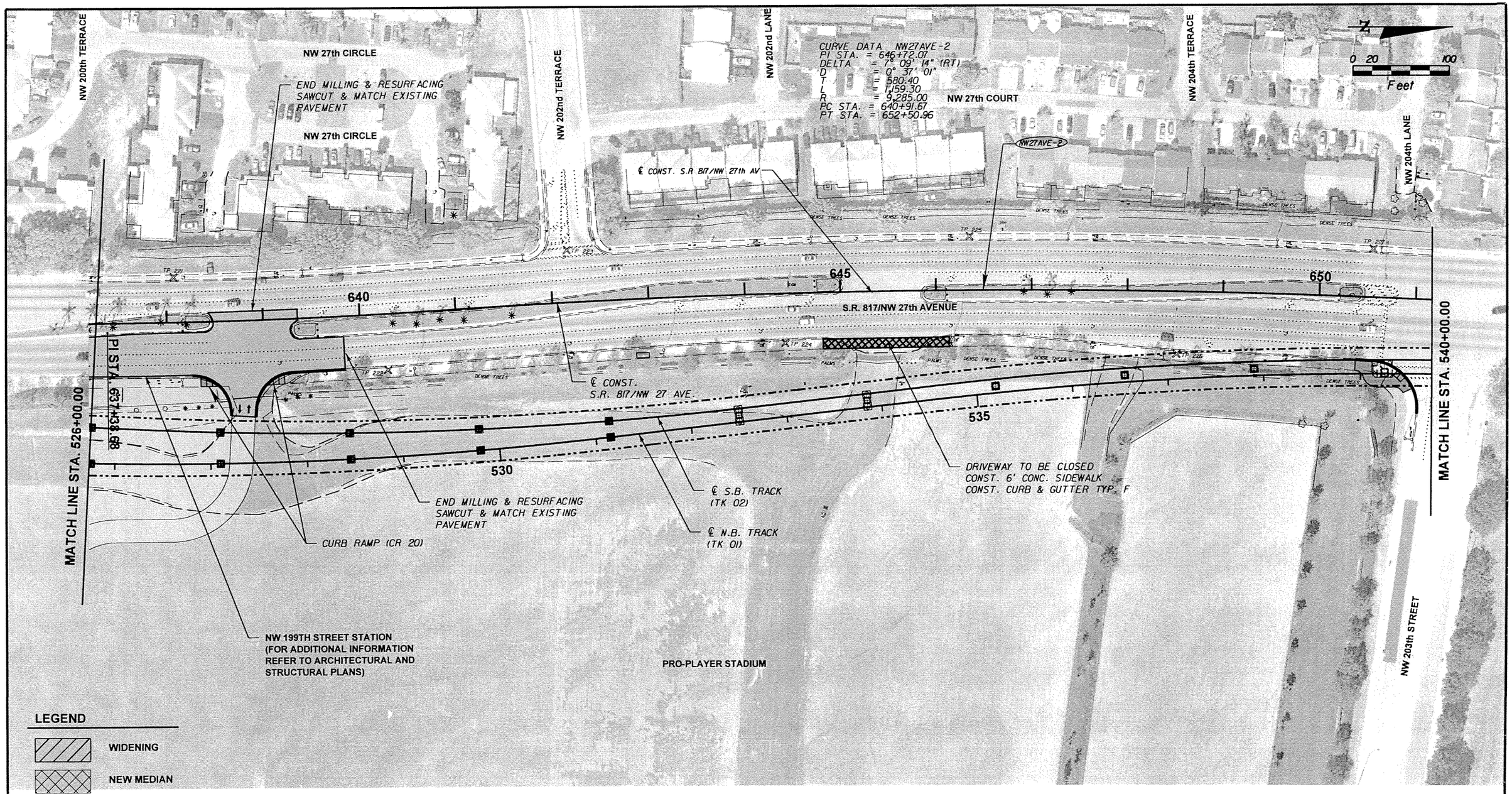

LEGEND

- WIDENING
- NEW MEDIAN
- DRIVEWAY CLOSURE
- PROPOSED SIDEWALK
- MILLING & RESURFACING
- PROPOSED COLUMN (SEE STRUCTURAL PLANS)

SUBJECT TO CHANGE

W.L.L. Designed by	05-06 Date					
J.N. Drawn by	05-06 Date					
C.V. Checked by	05-02-06 Date					
M.A.B. Approved by	05-05-06 Date	No.	Date	By / Chk	App.	Revisions

NORTH CORRIDOR METRORAIL EXTENSION - PRELIMINARY ENGINEERING (100% SUBMITTAL)

MIAMI-DADE COUNTY

MIAMI-DADE TRANSIT

PARSONS
7600 CORPORATE CENTER DRIVE, SUITE 500
MIAMI, FLORIDA 33126
PHONE: (786) 464-1000 FAX: (786) 845-7119
CERTIFICATE OF AUTHORIZATION NO. 1836
Approved Date

BND
CIVIL ENGINEERING • ENVIRONMENTAL • AIRPORT • CONSTRUCTION MANAGEMENT • TRANSPORTATION
1200 NW 78 AVENUE, SUITE 400
MIAMI, FLORIDA 33126 - (305) 599-8495
Approved MICHAEL A. BUDALL, P.E. Date

ROADWAY

ROADWAY PLANS

Scale 1" = 100' | Drawing RWP-55 | Sheet 15

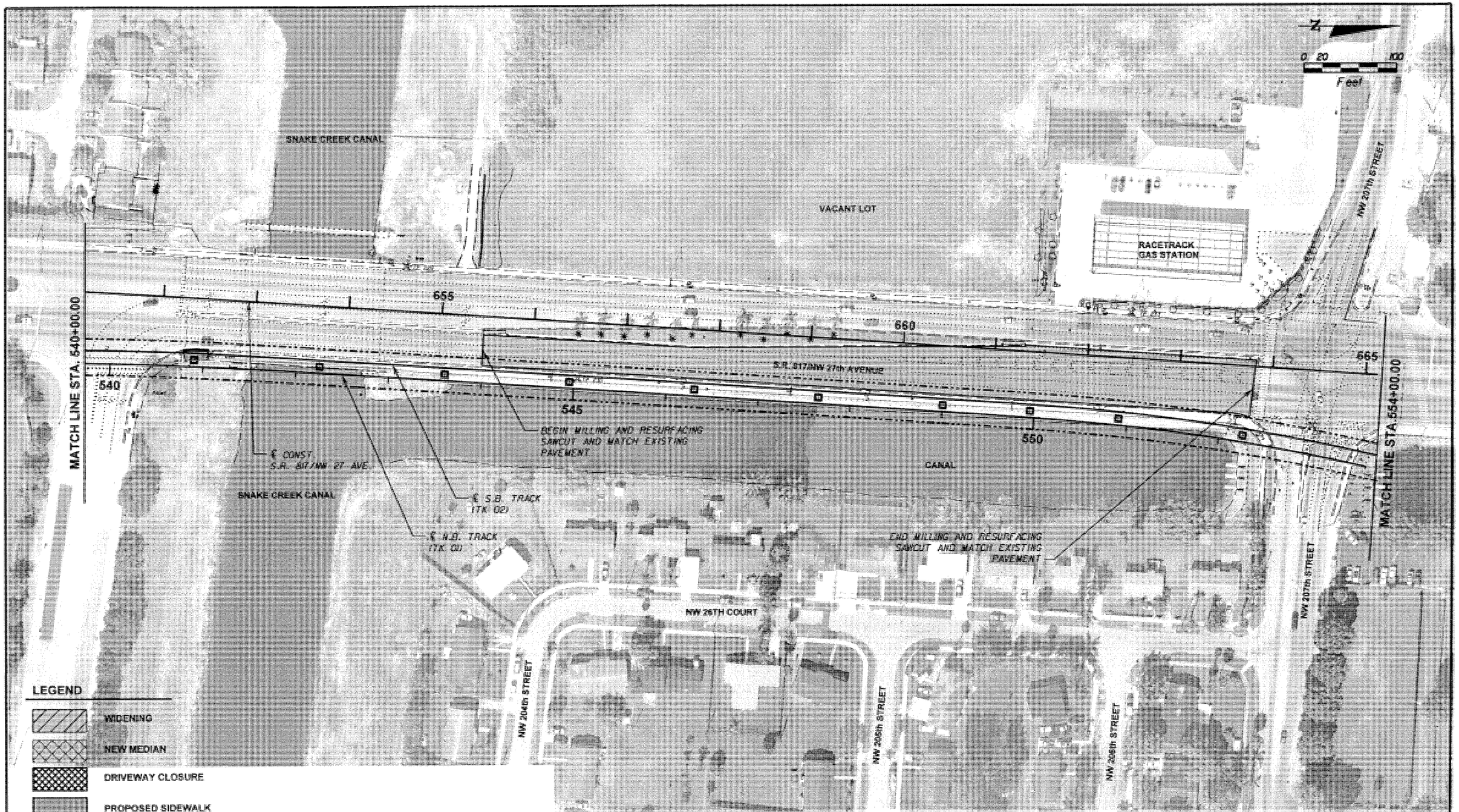

SUBJECT TO CHANGE

W.L.L. Designed by	05-06 Date					
J.N. Drawn by	05-06 Date					
C.V. Checked by	05-02-06 Date					
M.A.B. Approved by	05-05-06 Date	No.	Date	By	Chk	Revisions

NORTH CORRIDOR METRORAIL EXTENSION - PRELIMINARY ENGINEERING (100% SUBMITTAL)

MIAMI-DADE COUNTY

MIAMI-DADE TRANSIT

PARSONS
7600 CORPORATE CENTER DRIVE, SUITE 500
MIAMI, FLORIDA 33126
PHONE: (786) 454-1000 FAX: (786) 845-7119
CERTIFICATE OF AUTHORIZATION NO. 1838

BND
CIVIL ENGINEERING • ENVIRONMENTAL • AIRPORT • CONSTRUCTION MANAGEMENT • TRANSPORTATION
1200 NW 78 AVENUE, SUITE 400
MIAMI, FLORIDA 33126 - (305) 599-8495

Approved | Date | Approved MICHAEL A. BUDALL, P.E. | Date

ROADWAY

ROADWAY PLANS

Scale 1" = 100' | Drawing RWP-56 | Sheet 116

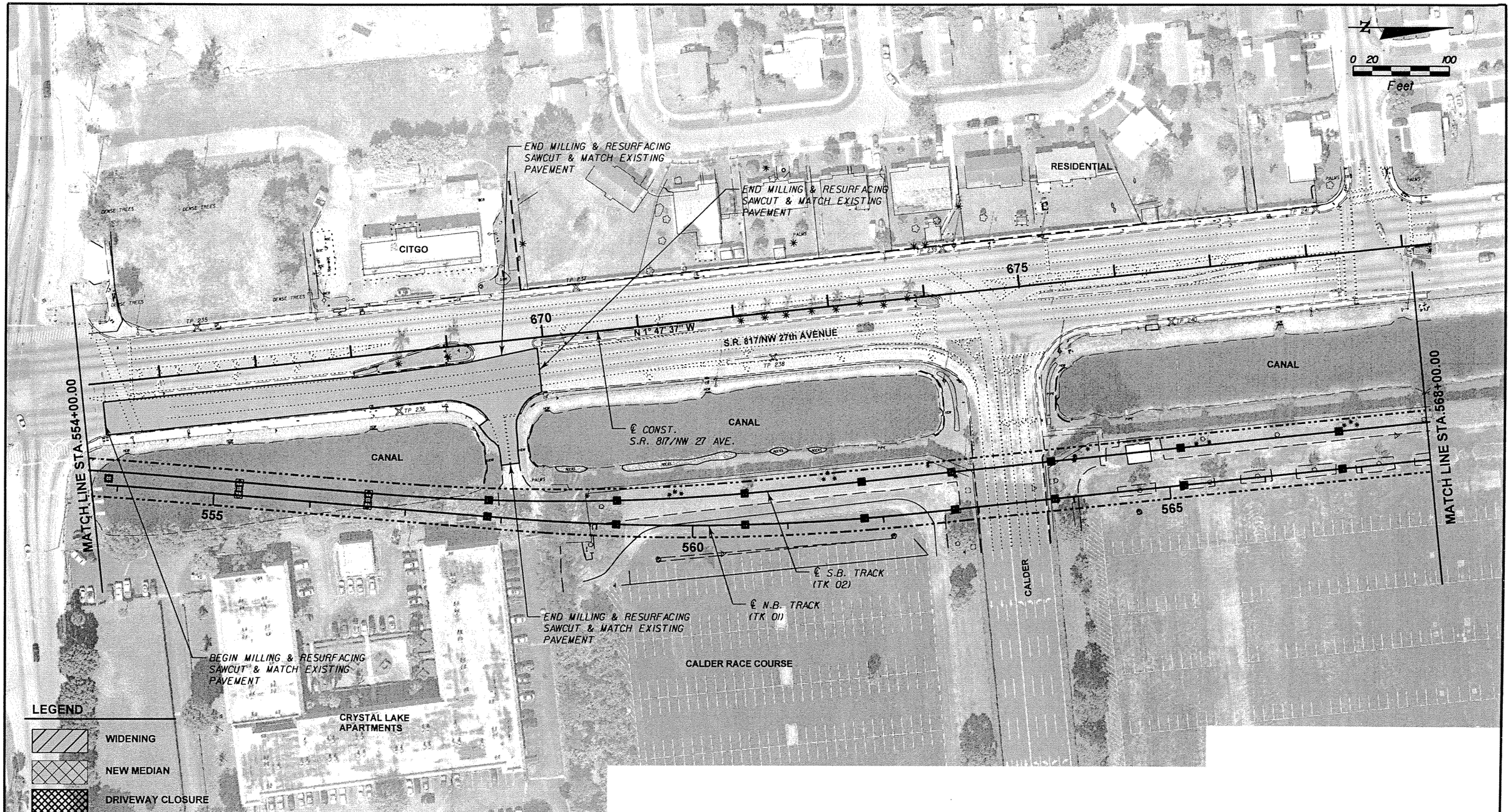

SUBJECT TO CHANGE

W.L.L. Designed by	05-06 Date					
J.N. Drawn by	05-06 Date					
C.V. Checked by	05-02-06 Date					
M.A.B. Approved by	05-05-06 Date	No.	Date	By / Chk	App.	Revisions

NORTH CORRIDOR METRORAIL EXTENSION - PRELIMINARY ENGINEERING (100% SUBMITTAL)

MIAMI-DADE COUNTY

MIAMI-DADE TRANSIT

PARSONS
7600 CORPORATE CENTER DRIVE, SUITE 500
MIAMI, FLORIDA 33126
PHONE: (786) 464-1000 FAX: (786) 845-7119
CERTIFICATE OF AUTHORIZATION NO. 1638

Approved _____ Date _____

BND
CIVIL ENGINEERING • ENVIRONMENTAL • AIRPORT • CONSTRUCTION MANAGEMENT • TRANSPORTATION
1200 NW 78 AVENUE, SUITE 400
MIAMI, FLORIDA 33126 - (305) 599-8495

Approved MICHAEL A. BUDALL, P.E. Date 5/8/2006 7:33:58 PM

ROADWAY

ROADWAY PLANS

Scale 1" = 100' Drawing RWP-57 Sheet

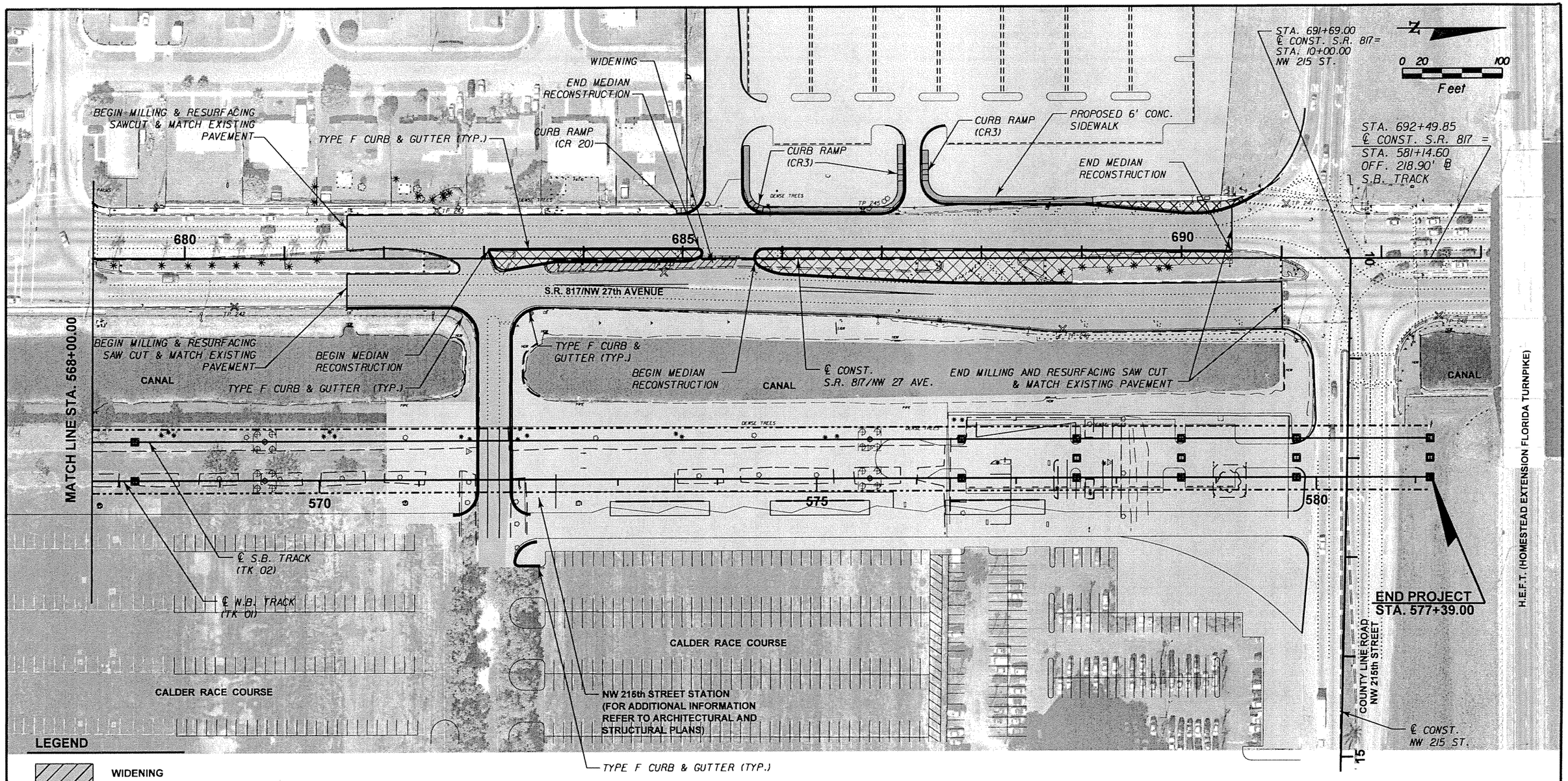

LEGEND

- WIDENING
- NEW MEDIAN
- DRIVEWAY CLOSURE
- PROPOSED SIDEWALK
- MILLING & RESURFACING
- PROPOSED COLUMN (SEE STRUCTURAL PLANS)

SUBJECT TO CHANGE

W.L.L. Designed by	05-06 Date						
J.N. Drawn by	05-06 Date						
C.V. Checked by	05-02-06 Date						
M.A.B. Approved by	05-05-06 Date	No.	Date	By / Chk	App.	Revisions	

NORTH CORRIDOR METRORAIL EXTENSION - PRELIMINARY ENGINEERING (100% SUBMITTAL)

MIAMI-DADE COUNTY — MIAMI-DADE TRANSIT

PARSONS
7600 CORPORATE CENTER DRIVE, SUITE 500
MIAMI, FLORIDA 33126
PHONE: (786) 464-1000 FAX: (786) 845-7119
CERTIFICATE OF AUTHORIZATION NO. 1838
Approved ____ Date ____

BND
CIVIL ENGINEERING • ENVIRONMENTAL • AIRPORT • CONSTRUCTION MANAGEMENT • TRANSPORTATION
1200 NW 78 AVENUE, SUITE 400
MIAMI, FLORIDA 33126 - (305) 599-8495
Approved MICHAEL A. BUDALL, P.E. Date ____

ROADWAY

ROADWAY PLANS

Scale 1" = 100' | Drawing RWP-58 | Sheet 118

5/8/2006 7:34:16 PM z:\2005-02\project\roadway\plans\r35.dgn

PARCEL PLAN
LEGEND AND GENERAL NOTES

PARCEL AREAS

GENERAL NOTES

1. REFER TO TRACK PLANS FOR ALIGNMENT DETAILS

2. REFER TO THE RIGHT OF WAY COST ESTIMATE REPORT FOR FURTHER DETAILS ON PARCEL AREA, DIMENSIONS AND DETAILS BASED ON THE NEED FOR FULL OR PARTIAL PARCEL TAKINGS RELATIVE TO AFFECTS ON PROPERTY REMAINING

N

NW 67th ST.

POST OFFICE

PROPOSED R/W

PS STA. 448+69.00
No. 15 TURNOUT

PITO STA. 449+09.29
No. 15 TURNOUT

TK 1

TS STA. 453+96.67

Parcel 310

JEHOVAH'S WITNESSES

SC STA. 454+96.57

455

CSI STA. 456+07.68

Parcel 311

ST STA. 457+07.68

BOXING CENTER
YOUTH CLUB HOUSE

TURF MOTEL

Parcel 313

450

27 TH AVE.

NW 66th ST.

BEGIN PROJECT
STA. 448+69.00

NW 67th ST.

EXISTING
METRORAIL
DOUBLE TRACK

EXISTING R/W

COD
MOTORCYCLE
CLUB

NW 68th ST.

BLACK JACK
AUTO AND TRUCK

NW 69th ST.

PROPOSED GUIDEWAY
COLUMNS
(TYP.)

TRUCK STORAGE

0 20 100
Feet

SUBJECT TO CHANGE

JE	5-06						
Designed by	Date						
KJ	5-06						
Drawn by	Date						
FB	5-06						
Checked by	Date						
Approved by	Date	No.	Date	By / Chk	App	Revisions	

NORTH CORRIDOR METRORAIL EXTENSION - PRELIMINARY ENGINEERING (100% SUBMITTAL)

REAL ESTATE ACQUISITION

MIAMI-DADE COUNTY

MIAMI-DADE TRANSIT

PARSONS
7600 CORPORATE CENTER DRIVE, SUITE 500
MIAMI, FLORIDA 33126
PHONE: (786) 454-1000 FAX: (786) 845-7119
CERTIFICATE OF AUTHORIZATION NO. 1836

Approved | Date

Approved | Date

PARCEL PLANS

Scale 1"=100 | Drawing REA-00 | Sheet 11 of

05/10/2006 12:08:34 PM s:\mdt_north\wmap\rwde800.dgn

N

NW 71st ST.

TURF MOTEL

Parcel 313

460

GUS PAINT & BODY SHOP

Parcel 314

EQUATION: TK 1 POT 464+51.95 BK = Sta 95+85.17 AH

STORAGE

Parcel 315

NW 73th ST.

TK 1

LA VEGA MOTORS CABS & TRUCKS

Parcel 316

100

PROPOSED R/W

F.E.C. RAILROAD

3 STORAGE INC. NW MILL WORKS

Parcel 317

105

A & L TRUCK PARTS & EQUIPMENT

Parcel 318 (1)

NW 27th Avenue

NW 27th AVE

EXISTING METRORAIL DOUBLE TRACK

TK 2

105

NW 70th ST.

AMERICAN SALVAGE

VACANT LOT - GAS STATION

NW 71st Ter.

VACANT LOT

EQUATION: TK 2 POT 464+51.95 BK = Sta 95+85.17 AH

RO-SA-MAR AUTO REPAIR

NW 72nd ST.

PAYLESS CARS

USED CARS

PROPOSED GUIDEWAY COLUMNS (TYP.)

POT STA. 103+37.72 MEET EXISTING

REDS SPECIALTY

NW 74th ST.

PS STA. 104+77.47 * No. 15 LH TURNOUT

PITO STA. 105+17.76 No. 15 LH TURNOUT

AUTO TRUCK

0 20 100

Feet

SUBJECT TO CHANGE

JE Designed by	5-06 Date					
KJ Drawn by	5-06 Date					
FB Checked by	5-06 Date					
Approved by	Date	No.	Date	By / Chk	App.	Revisions

NORTH CORRIDOR METRORAIL EXTENSION - PRELIMINARY ENGINEERING (100% SUBMITTAL)

REAL ESTATE ACQUISITION

MIAMI-DADE COUNTY

MIAMI-DADE TRANSIT

PARSONS
7600 CORPORATE CENTER DRIVE, SUITE 500
MIAMI, FLORIDA 33126
PHONE: (786) 464-1000 FAX: (786) 845-7119
CERTIFICATE OF AUTHORIZATION NO. 1838

PARCEL PLANS

Approved	Date	Approved	Date	Scale	Drawing	Sheet
				1"=100	REA-01	120

05/10/2006 12:08:54 PM S:\MDT_NORTH\rwmap\rwdet01.dgn

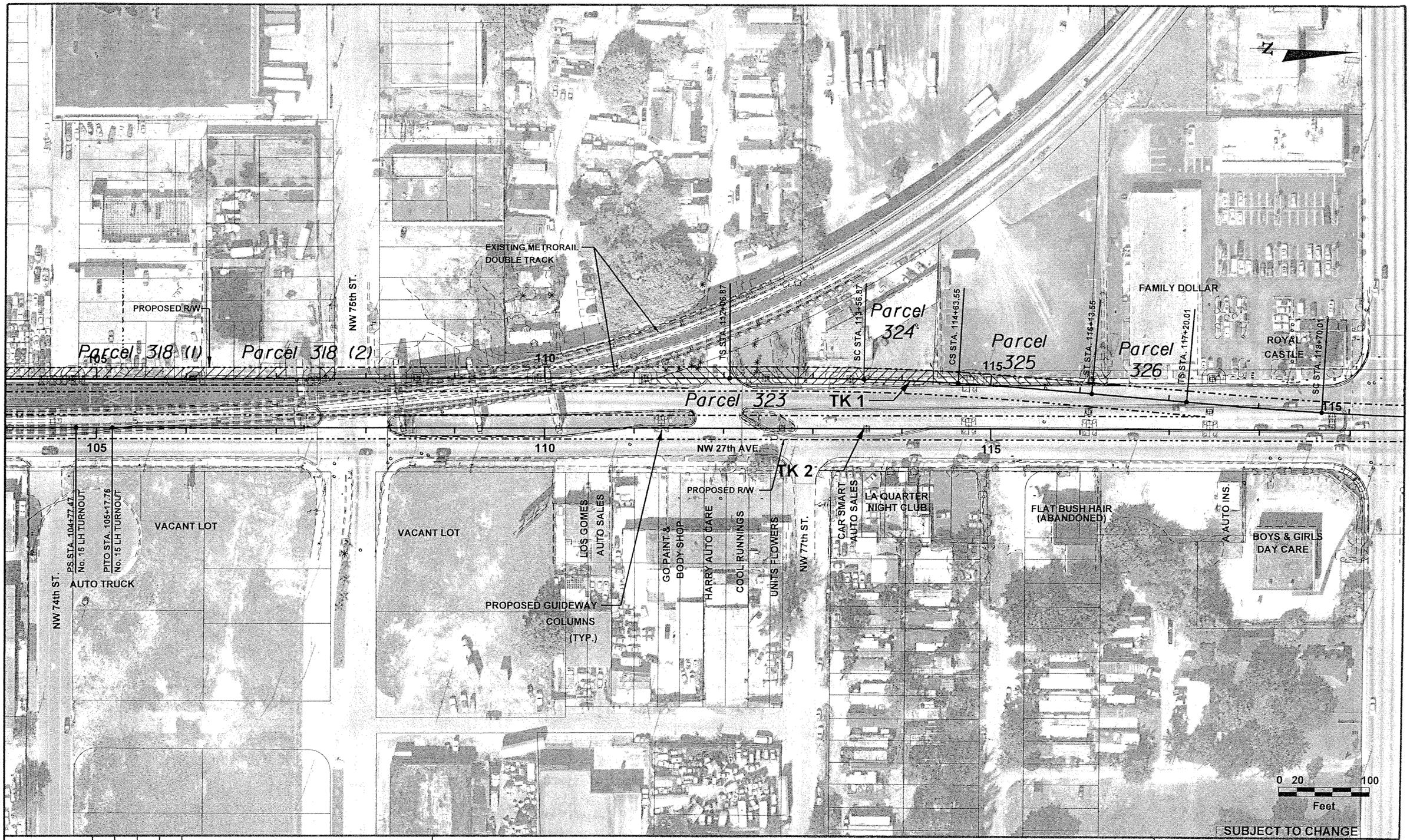

JE	5-06						
Designed by	Date						
KJ	5-06						
Drawn by	Date						
FB	5-06						
Checked by	Date						
Approved by	Date	No.	Date	By / Chk	App.	Revisions	

NORTH CORRIDOR METRORAIL EXTENSION - PRELIMINARY ENGINEERING (100% SUBMITTAL)

REAL ESTATE ACQUISITION

MIAMI-DADE COUNTY

MIAMI-DADE TRANSIT

PARSONS
7600 CORPORATE CENTER DRIVE, SUITE 500
MIAMI, FLORIDA 33126
PHONE: (786) 464-1000 FAX: (786) 845-7119
CERTIFICATE OF AUTHORIZATION NO. 1836

Approved | Date

Approved | Date

PARCEL PLANS

Scale 1"=100 | Drawing REA-02 | Sheet 21

05/10/2006 12:09:14 PM S:\MDT_NORTH\rwmap\rwdet02.dgn

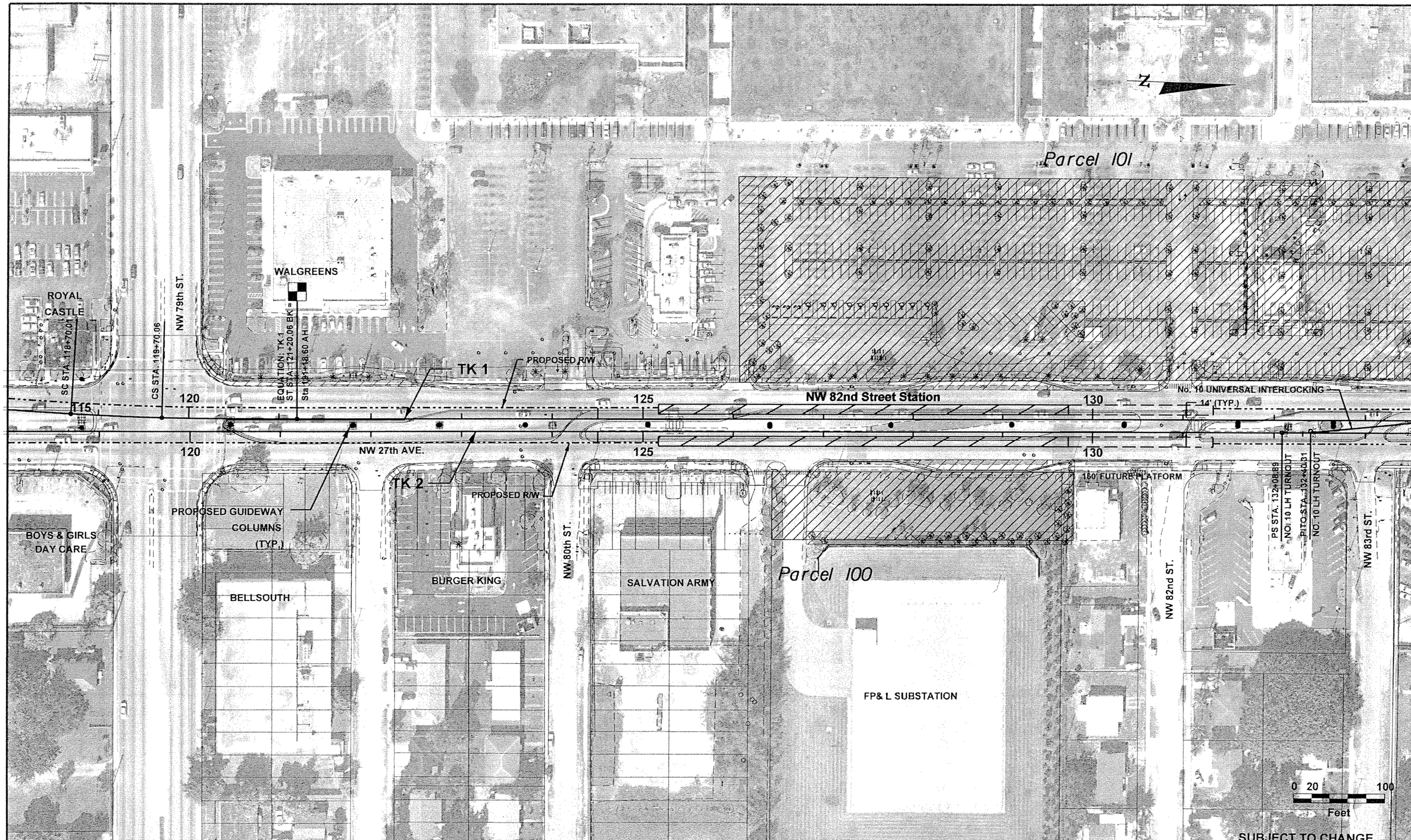

JE	5-06					
Designed by	Date					
KJ	5-06					
Drawn by	Date					
FB	5-06					
Checked by	Date					
Approved by	Date	No.	Date	By / Chk	App.	Revisions

NORTH CORRIDOR METRORAIL EXTENSION - PRELIMINARY ENGINEERING (100% SUBMITTAL)

MIAMI-DADE COUNTY

MIAMI-DADE TRANSIT

PARSONS
7600 CORPORATE CENTER DRIVE, SUITE 500
MIAMI, FLORIDA 33126
PHONE: (786) 464-1000 FAX: (786) 845-7119
CERTIFICATE OF AUTHORIZATION NO. 1838

Approved | Date | Approved | Date

REAL ESTATE ACQUISITION

PARCEL PLANS

Scale 1"=100 | Drawing REA-03 | Sheet 122

05/10/2006 12:09:35 PM S:\MDT_NORTH\rwmap\rwdetl03.dgn

JE	5-06						
Designed by	Date						
KJ	5-06						
Drawn by	Date						
FB	5-06						
Checked by	Date						
Approved by	Date	No.	Date	By / Chk	App.	Revisions	

NORTH CORRIDOR METRORAIL EXTENSION - PRELIMINARY ENGINEERING (100% SUBMITTAL)

REAL ESTATE ACQUISITION

MIAMI-DADE COUNTY

MIAMI-DADE TRANSIT

PARSONS
7600 CORPORATE CENTER DRIVE, SUITE 500
MIAMI, FLORIDA 33126
PHONE: (786) 464-1000 FAX: (786) 845-7119
CERTIFICATE OF AUTHORIZATION NO. 1838

Approved	Date	Approved	Date

PARCEL PLANS

Scale	Drawing	Sheet
1"=100	REA-04	123

05/10/2006 12:09:59 PM S:\MDT_NORTH\rwmap\rwdet004.dgn

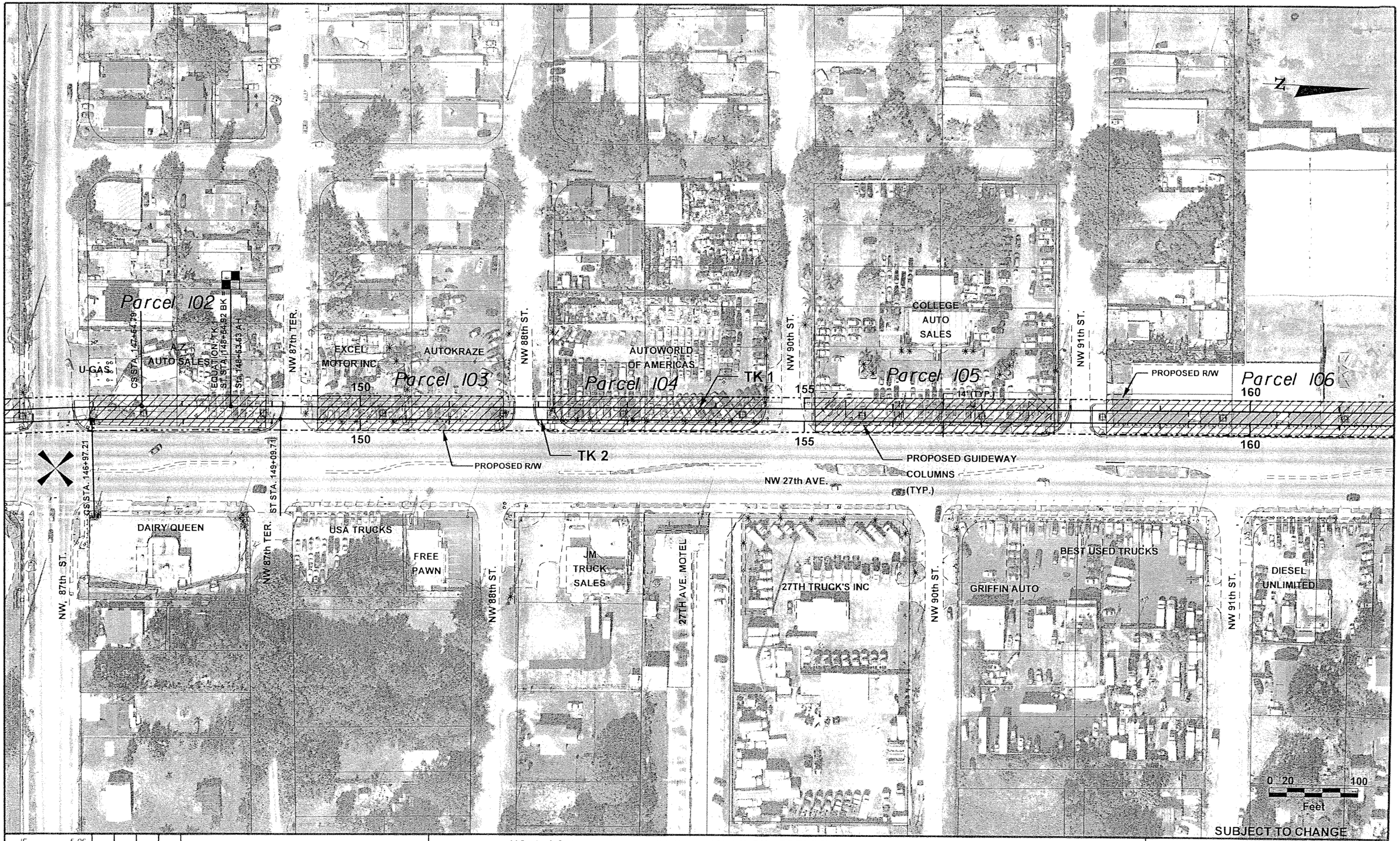

JE	5-06					
Designed by	Date					
KJ	5-06					
Drawn by	Date					
FB	5-06					
Checked by	Date					
Approved by	Date	No.	Date	By / Chk	App.	Revisions

NORTH CORRIDOR METRORAIL EXTENSION - PRELIMINARY ENGINEERING (100% SUBMITTAL)

MIAMI-DADE COUNTY

MIAMI-DADE TRANSIT

PARSONS
7600 CORPORATE CENTER DRIVE, SUITE 500
MIAMI, FLORIDA 33126
PHONE: (786) 464-1000 FAX: (786) 845-7119
CERTIFICATE OF AUTHORIZATION NO. 1838

Approved | Date | Approved | Date

REAL ESTATE ACQUISITION

PARCEL PLANS

Scale 1"=100 | Drawing REA-05 | Sheet 124

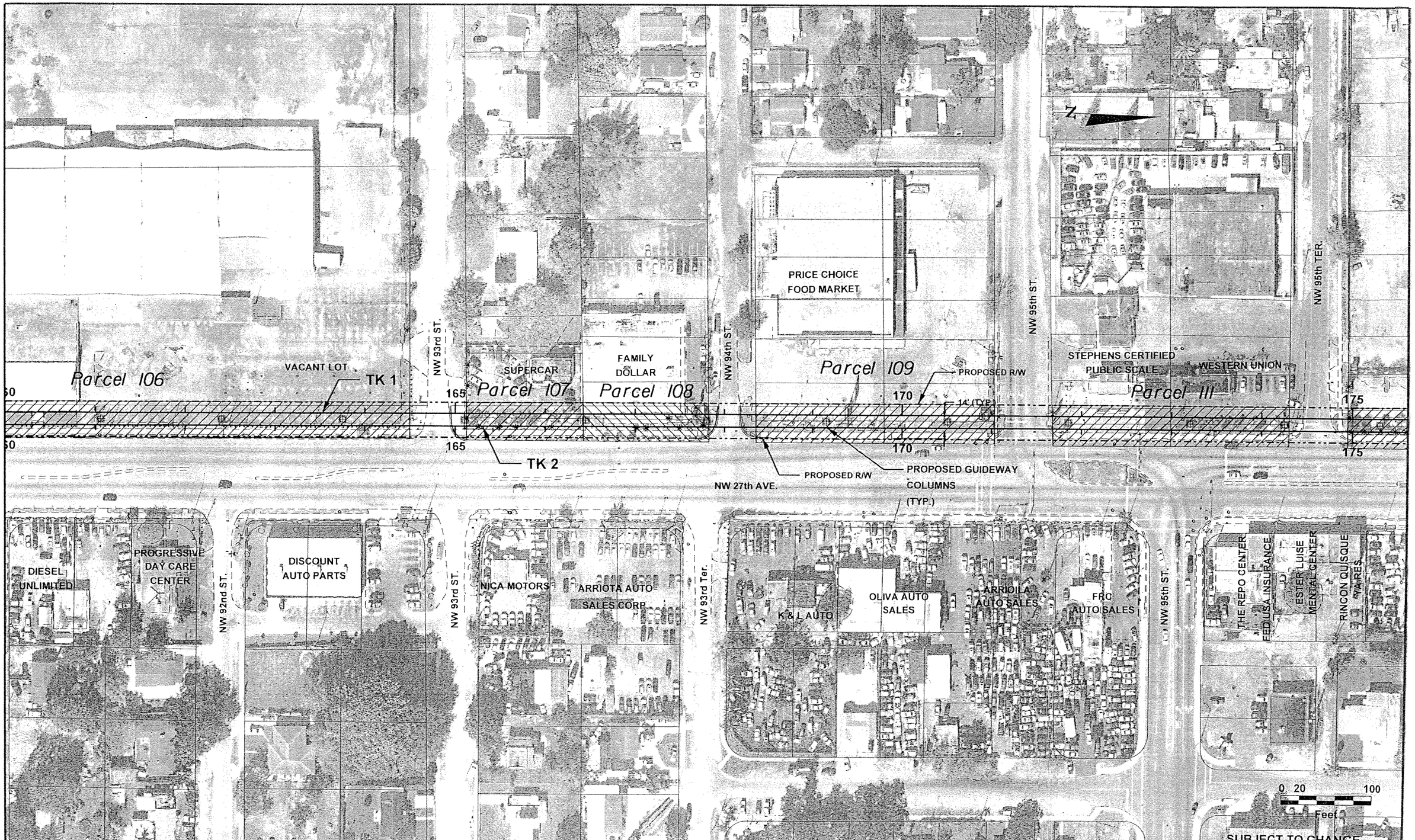

JE	5-06					
Designed by	Date					
KJ	5-06					
Drawn by	Date					
FB	5-06					
Checked by	Date					
Approved by	Date	No.	Date	By / Chk.	App.	Revisions

NORTH CORRIDOR METRORAIL EXTENSION - PRELIMINARY ENGINEERING (100% SUBMITTAL)

REAL ESTATE ACQUISITION

MIAMI-DADE COUNTY

MIAMI-DADE TRANSIT

PARSONS
7600 CORPORATE CENTER DRIVE, SUITE 500
MIAMI, FLORIDA 33126
PHONE: (786) 454-1000 FAX: (786) 845-7119
CERTIFICATE OF AUTHORIZATION NO. 1836

Approved | Date | Approved | Date

PARCEL PLANS

Scale 1"=100 | Drawing REA-06 | Sheet 125

05/10/2006 12:10:42 PM S:\MDT_NORTH\rwmap\rwlet06.dgn

JE	5-06					
Designed by	Date					
KJ	5-06					
Drawn by	Date					
FB	5-06					
Checked by	Date					
Approved by	Date	No.	Date	By / Chk.	App.	Revisions

NORTH CORRIDOR METRORAIL EXTENSION - PRELIMINARY ENGINEERING (100% SUBMITTAL)

MIAMI-DADE COUNTY

MIAMI-DADE TRANSIT

PARSONS
7600 CORPORATE CENTER DRIVE, SUITE 500
MIAMI, FLORIDA 33126
PHONE: (786) 464-1000 FAX: (786) 845-7119
CERTIFICATE OF AUTHORIZATION NO. 1838

Approved | Date

Approved | Date

REAL ESTATE ACQUISITION

PARCEL PLANS

Scale 1"=100 | Drawing REA-07 | Sheet 126

05/10/2006 12:11:00 PM S:\MDT_NORTH\pwmpolowtel07.dgn

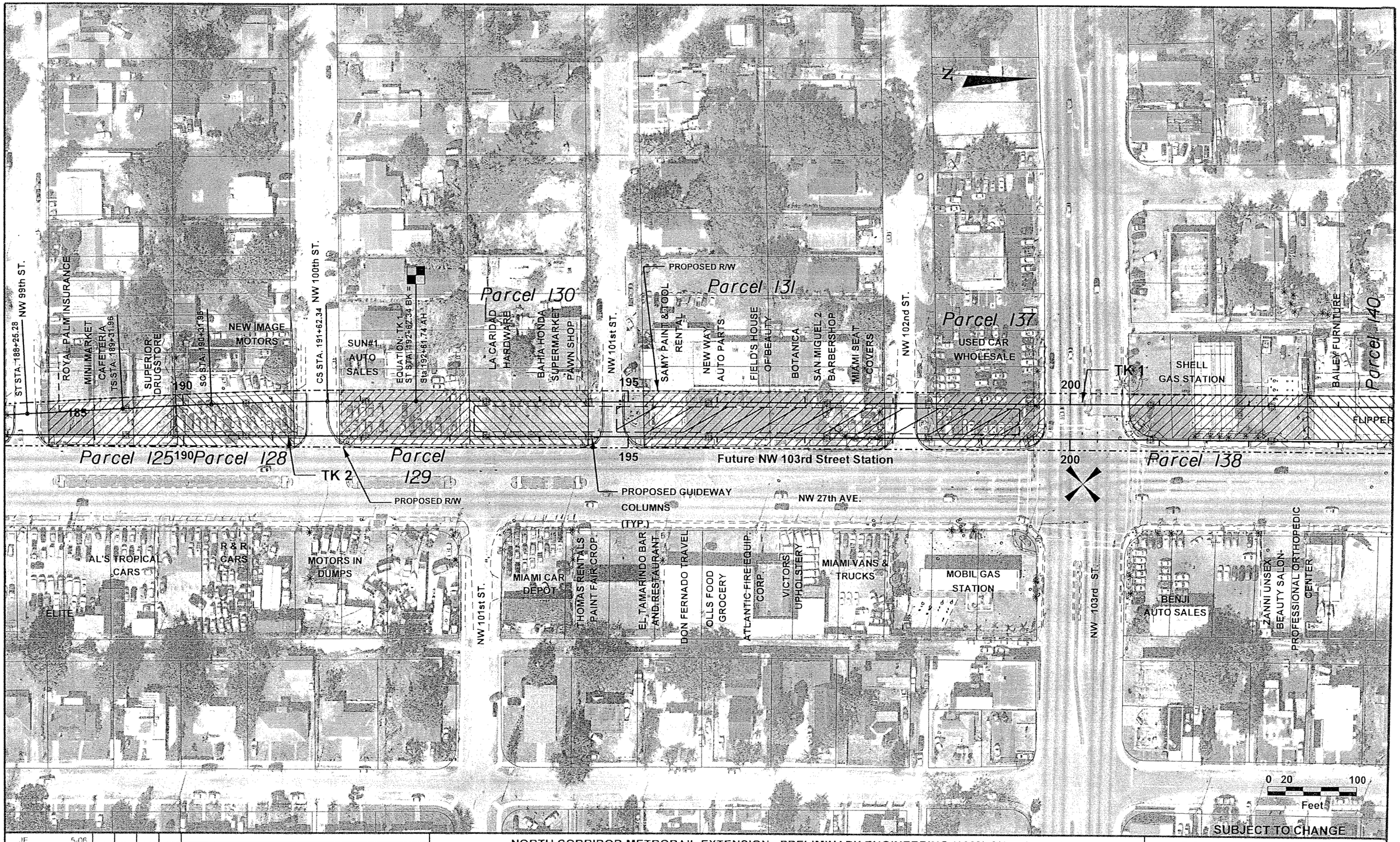

JE	5-06						
Designed by	Date						
KJ	5-06						
Drawn by	Date						
FB	5-06						
Checked by	Date						
Approved by	Date	No.	Date	By / Chk.	App.	Revisions	

NORTH CORRIDOR METRORAIL EXTENSION - PRELIMINARY ENGINEERING (100% SUBMITTAL)

MIAMI-DADE COUNTY

MIAMI-DADE TRANSIT

PARSONS
7600 CORPORATE CENTER DRIVE, SUITE 500
MIAMI, FLORIDA 33126
PHONE: (786) 464-1000 FAX: (786) 845-7119
CERTIFICATE OF AUTHORIZATION NO. 1838

Approved | Date | Approved | Date

REAL ESTATE ACQUISITION

PARCEL PLANS

Scale 1"=100 | Drawing REA-08 | Sheet 127

05/10/2006 12:11:20 PM S:\MDT_NORTH\rwmap\rwdet08.dgn

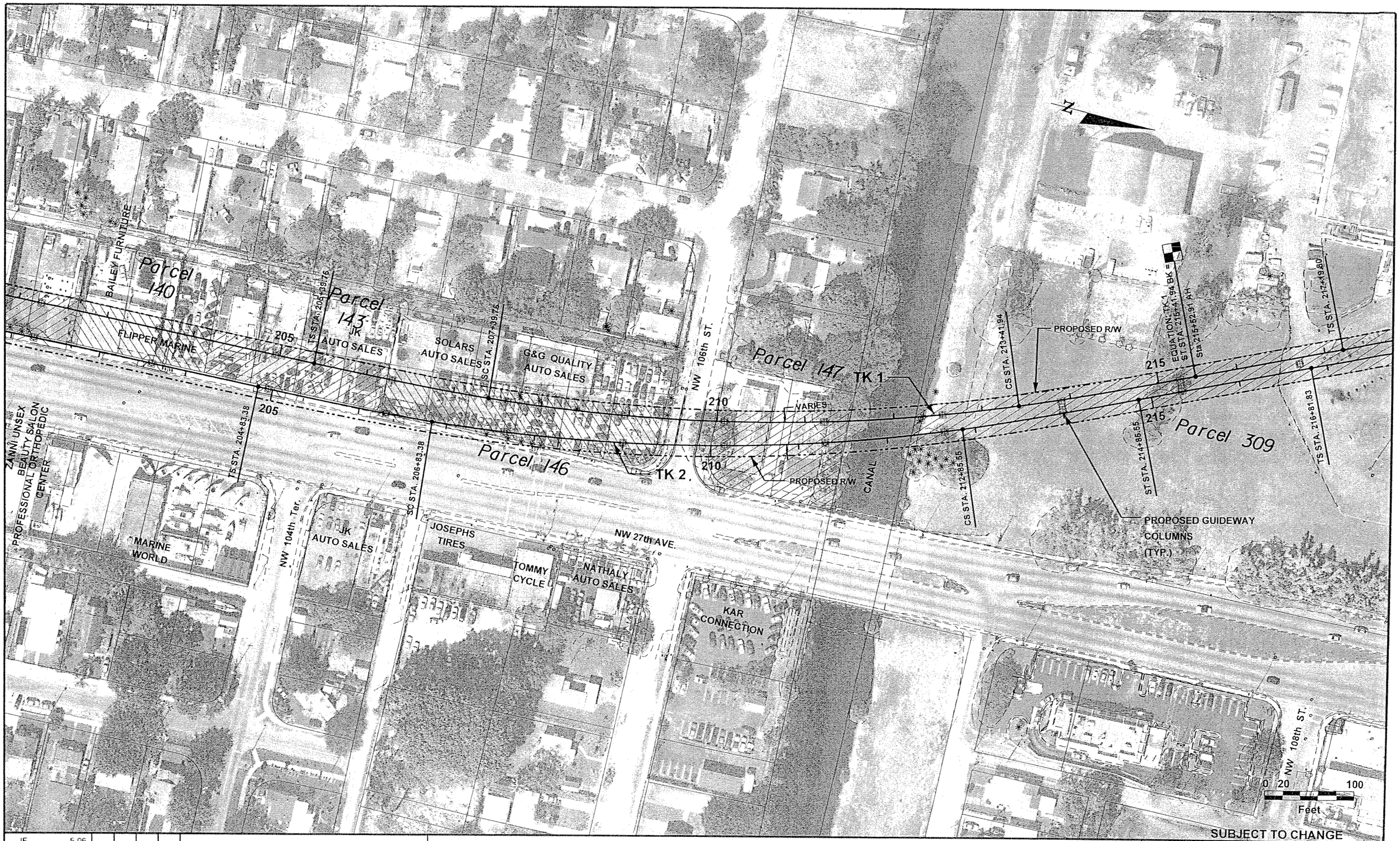

JE	5-06						
Designed by	Date						
KJ	5-06						
Drawn by	Date						
FB	5-06						
Checked by	Date						
Approved by	Date	No.	Date	By / Chk	App.	Revisions	

NORTH CORRIDOR METRORAIL EXTENSION - PRELIMINARY ENGINEERING (100% SUBMITTAL)

REAL ESTATE ACQUISITION

MIAMI-DADE COUNTY

MIAMI-DADE TRANSIT

PARSONS
7600 CORPORATE CENTER DRIVE, SUITE 500
MIAMI, FLORIDA 33126
PHONE: (786) 464-1000 FAX: (786) 845-7119
CERTIFICATE OF AUTHORIZATION NO. 1838

Approved | Date | Approved | Date

PARCEL PLANS

Scale 1"=100 | Drawing REA-09 | Sheet 128

05/10/2006 12:11:54 PM S:\MDT_NORTH\Engineering\dwgs\...

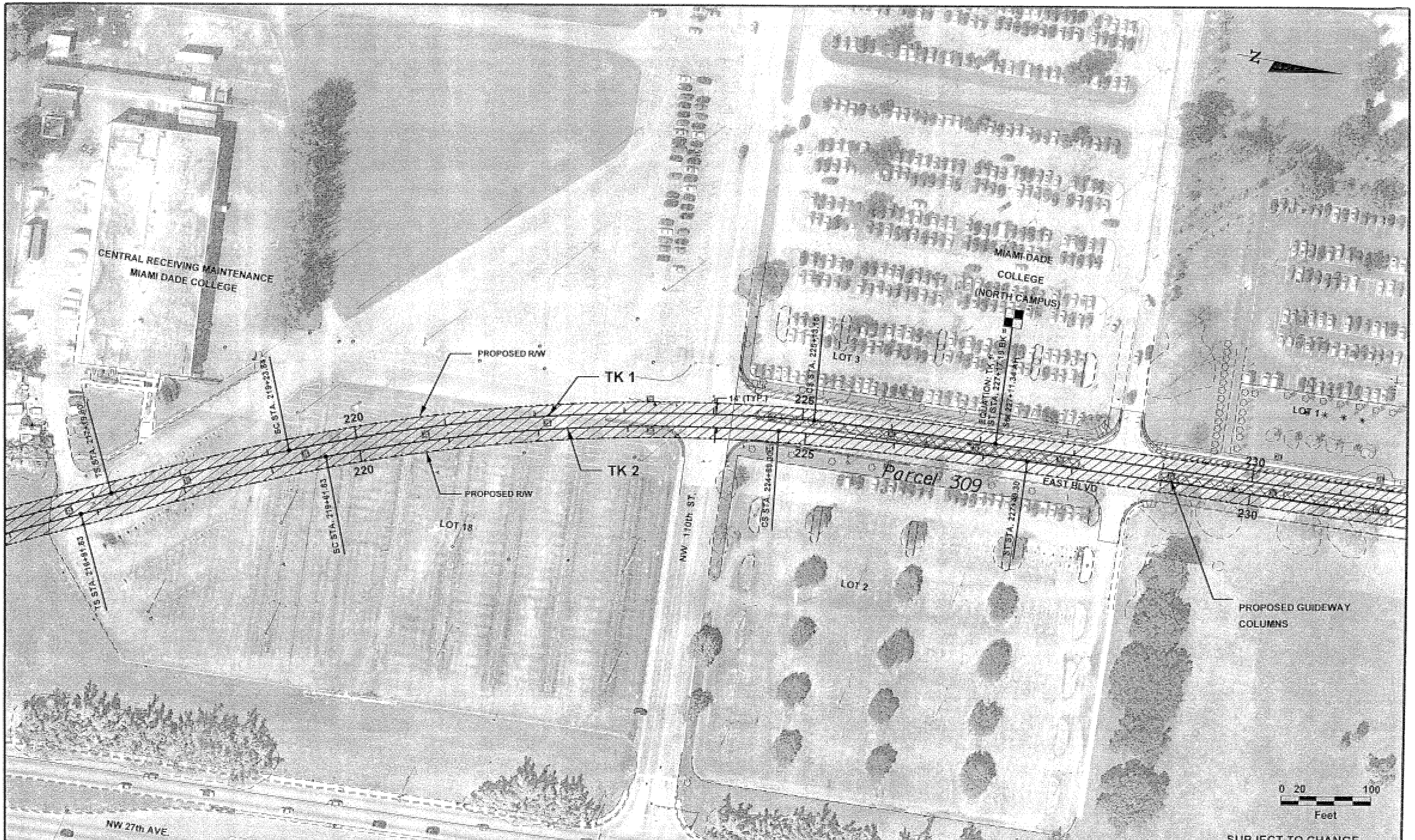

JE	5-06					
Designed by	Date					
KJ	5-06					
Drawn by	Date					
FB	5-06					
Checked by	Date					
Approved by	Date	No.	Date	By	App.	Revisions

NORTH CORRIDOR METRORAIL EXTENSION - PRELIMINARY ENGINEERING (100% SUBMITTAL)

MIAMI-DADE COUNTY

MIAMI-DADE TRANSIT

PARSONS
7800 CORPORATE CENTER DRIVE, SUITE 500
MIAMI, FLORIDA 33126
PHONE: (786) 464-1000 FAX: (786) 845-7119
CERTIFICATE OF AUTHORIZATION NO. 1838

Approved | Date | Approved | Date

REAL ESTATE ACQUISITION

PARCEL PLANS

Scale 1"=100 | Drawing REA-16 | Sheet 129

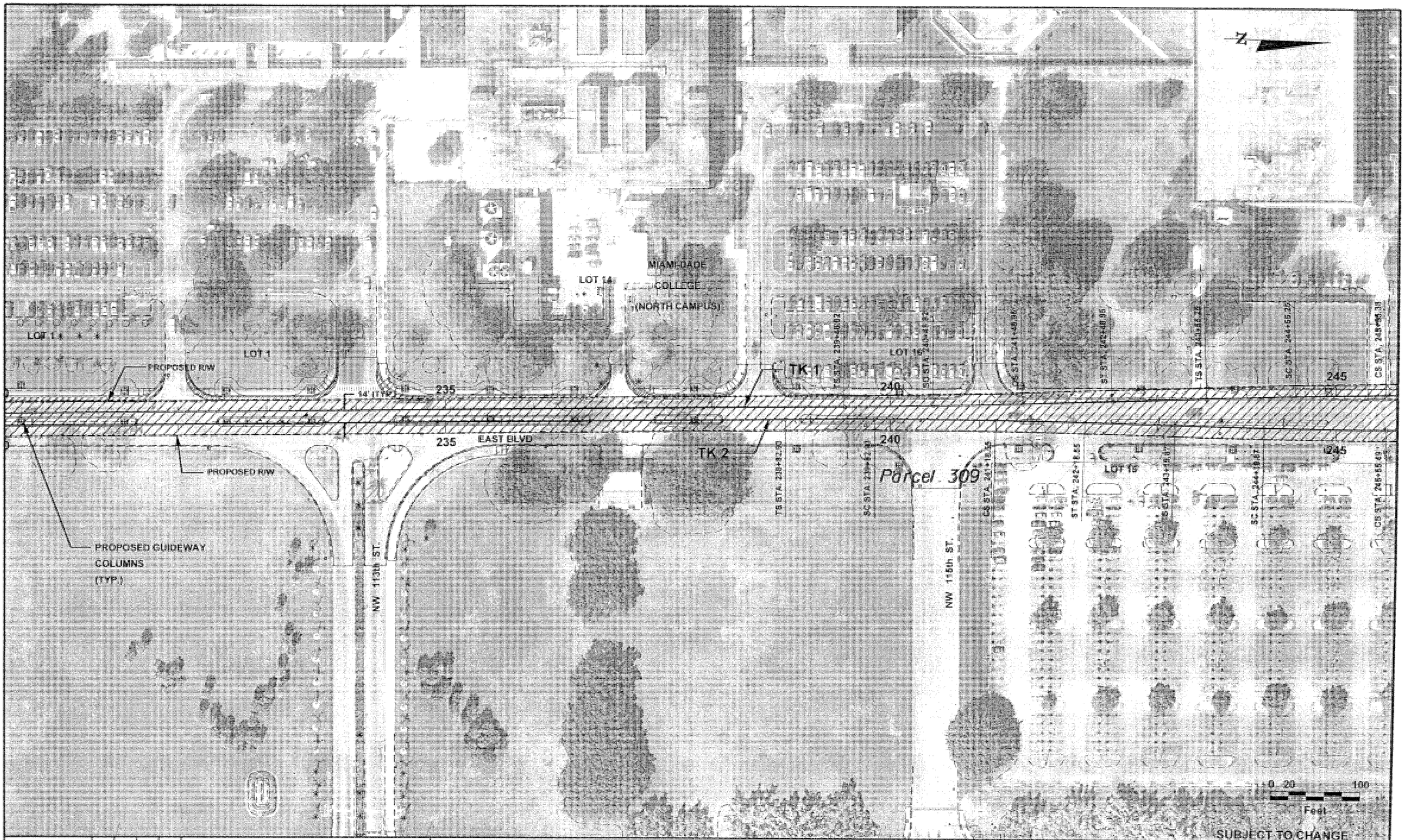

JE	5-06				
Designed by	Date				
KJ	5-06				
Drawn by	Date				
FB	5-06				
Checked By	Date				
Approved by	Date	No.	Date	By / Chk.	Appr.	Revisions

NORTH CORRIDOR METRORAIL EXTENSION - PRELIMINARY ENGINEERING (100% SUBMITTAL)

REAL ESTATE ACQUISITION

MIAMI-DADE COUNTY

MIAMI-DADE TRANSIT

PARSONS
7900 CORPORATE CENTER DRIVE, SUITE 500
MIAMI, FLORIDA 33126
PHONE: (786) 464-1000 FAX: (786) 845-7115
CERTIFICATE OF AUTHORIZATION NO. 1836

Approved	Date	Approved	Date

PARCEL PLANS

Scale	Drawing	Sheet
1"=100	REA-11	130

05/18/2006 12:12:36 PM S:\MDT_NORTH\new\project1.dgn

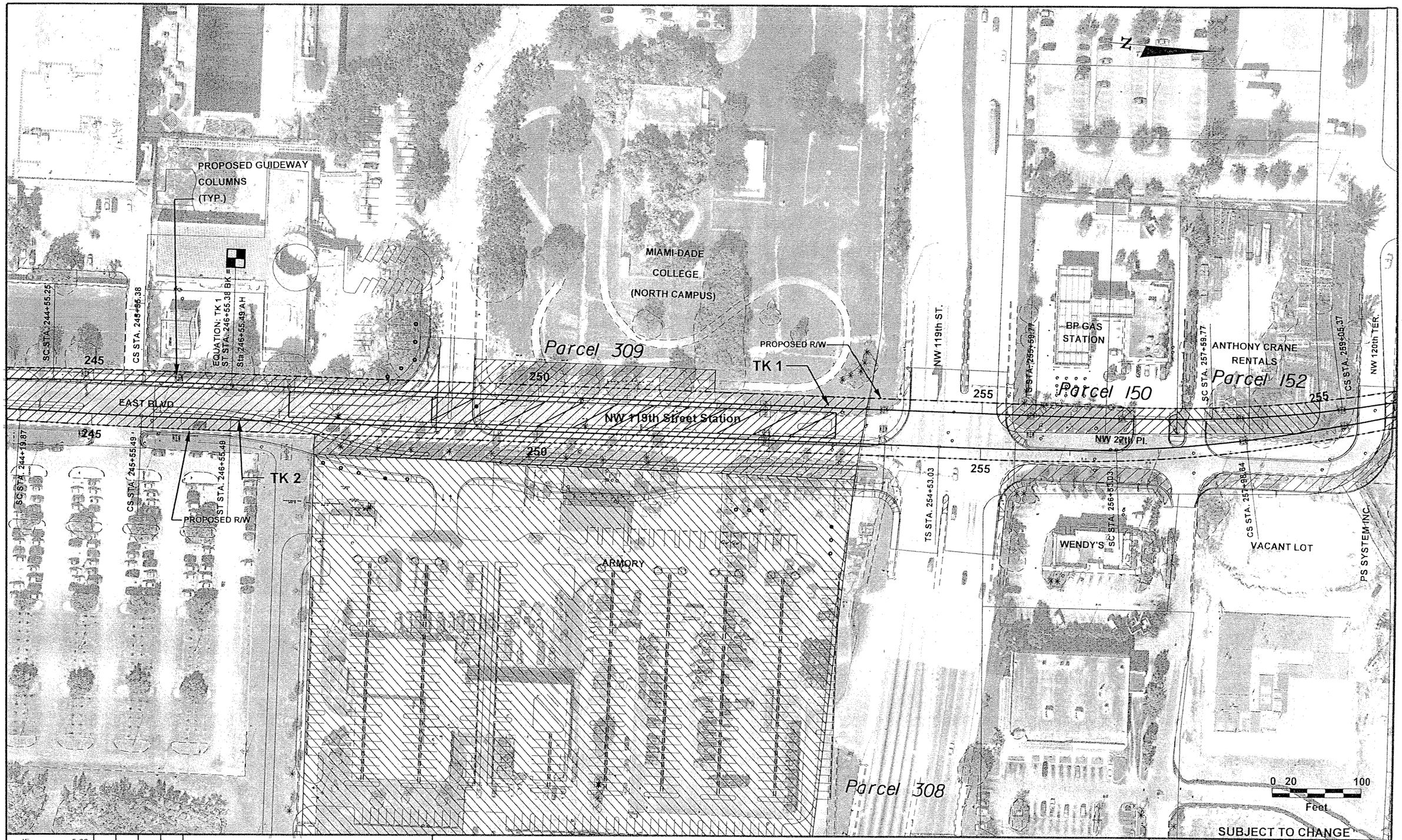

JE	5-06					
Designed by	Date					
KJ	5-06					
Drawn by	Date					
FB	5-06					
Checked by	Date					
Approved by	Date	No.	Date	By / Chk.	App.	Revisions

NORTH CORRIDOR METRORAIL EXTENSION - PRELIMINARY ENGINEERING (100% SUBMITTAL)

REAL ESTATE ACQUISITION

MIAMI-DADE COUNTY

MIAMI-DADE TRANSIT

PARSONS
7600 CORPORATE CENTER DRIVE, SUITE 500
MIAMI, FLORIDA 33126
PHONE: (786) 464-1000 FAX: (786) 845-7119
CERTIFICATE OF AUTHORIZATION NO. 1638

Approved | Date

Approved | Date

PARCEL PLANS

Scale 1"=100 | Drawing REA-12 | Sheet 131

05/10/2006 03:55:48 PM S:\MDT_NORTH\rwmap\rwdet12.dgn

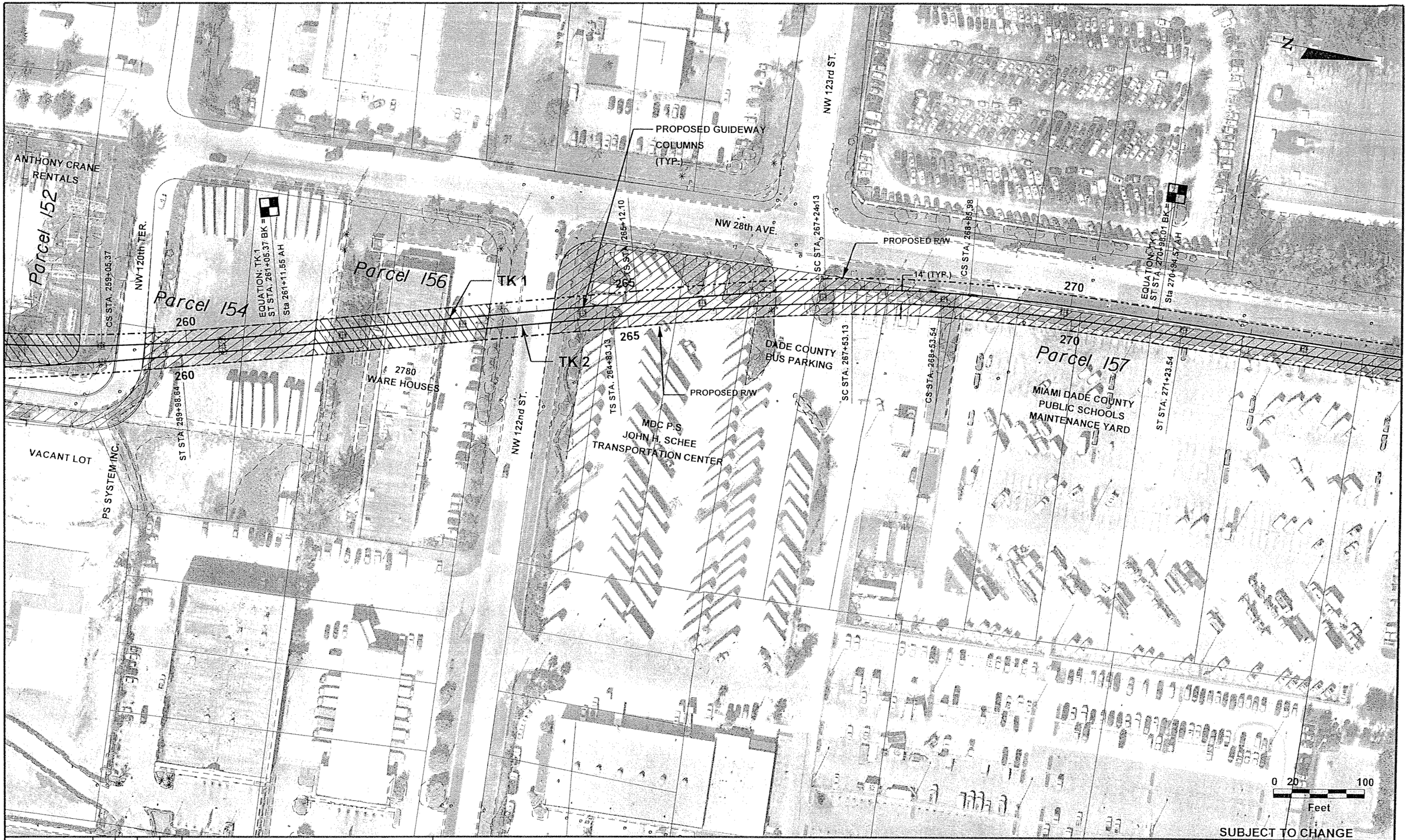

JE	5-06					
Designed by	Date					
KJ	5-06					
Drawn by	Date					
FB	5-06					
Checked by	Date					
Approved by	Date	No.	Date	By / Chk	App.	Revisions

NORTH CORRIDOR METRORAIL EXTENSION - PRELIMINARY ENGINEERING (100% SUBMITTAL)

REAL ESTATE ACQUISITION

MIAMI-DADE COUNTY

MIAMI-DADE TRANSIT

PARSONS
7600 CORPORATE CENTER DRIVE, SUITE 500
MIAMI, FLORIDA 33126
PHONE: (786) 464-1000 FAX: (786) 845-7119
CERTIFICATE OF AUTHORIZATION NO. 1838

Approved | Date

Approved | Date

PARCEL PLANS

Scale 1"=100 | Drawing REA-13 | Sheet 132

05/10/2006 04:10:48 PM S:\MDT_NORTH\rwmap\rwdet13.dgn

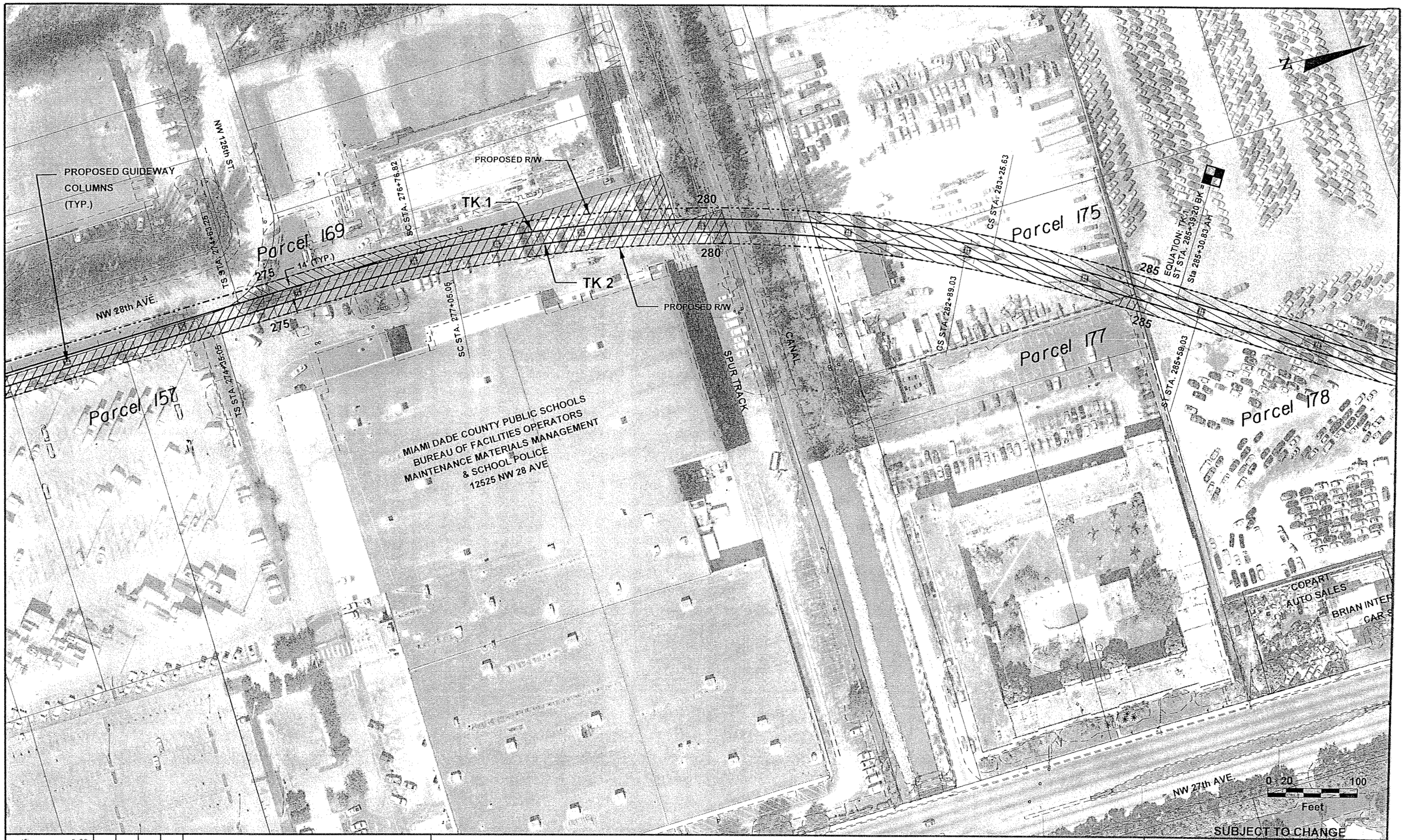

JE 5-06 Designed by Date						
KJ 5-06 Drawn by Date						
FB 5-06 Checked by Date						
Approved by Date	No.	Date	By / Chk	App.	Revisions	

NORTH CORRIDOR METRORAIL EXTENSION - PRELIMINARY ENGINEERING (100% SUBMITTAL)

REAL ESTATE ACQUISITION

MIAMI-DADE COUNTY — MIAMI-DADE TRANSIT

PARSONS
7600 CORPORATE CENTER DRIVE, SUITE 500
MIAMI, FLORIDA 33126
PHONE: (786) 464-1000 FAX: (786) 845-7119
CERTIFICATE OF AUTHORIZATION NO. 1836

Approved Date

Approved Date

PARCEL PLANS

Scale 1"=100 | Drawing REA-14 | Sheet 133

05/10/2006 12:13:57 PM S:\MDT_NORTH\wmap\rwdelt14.dgn

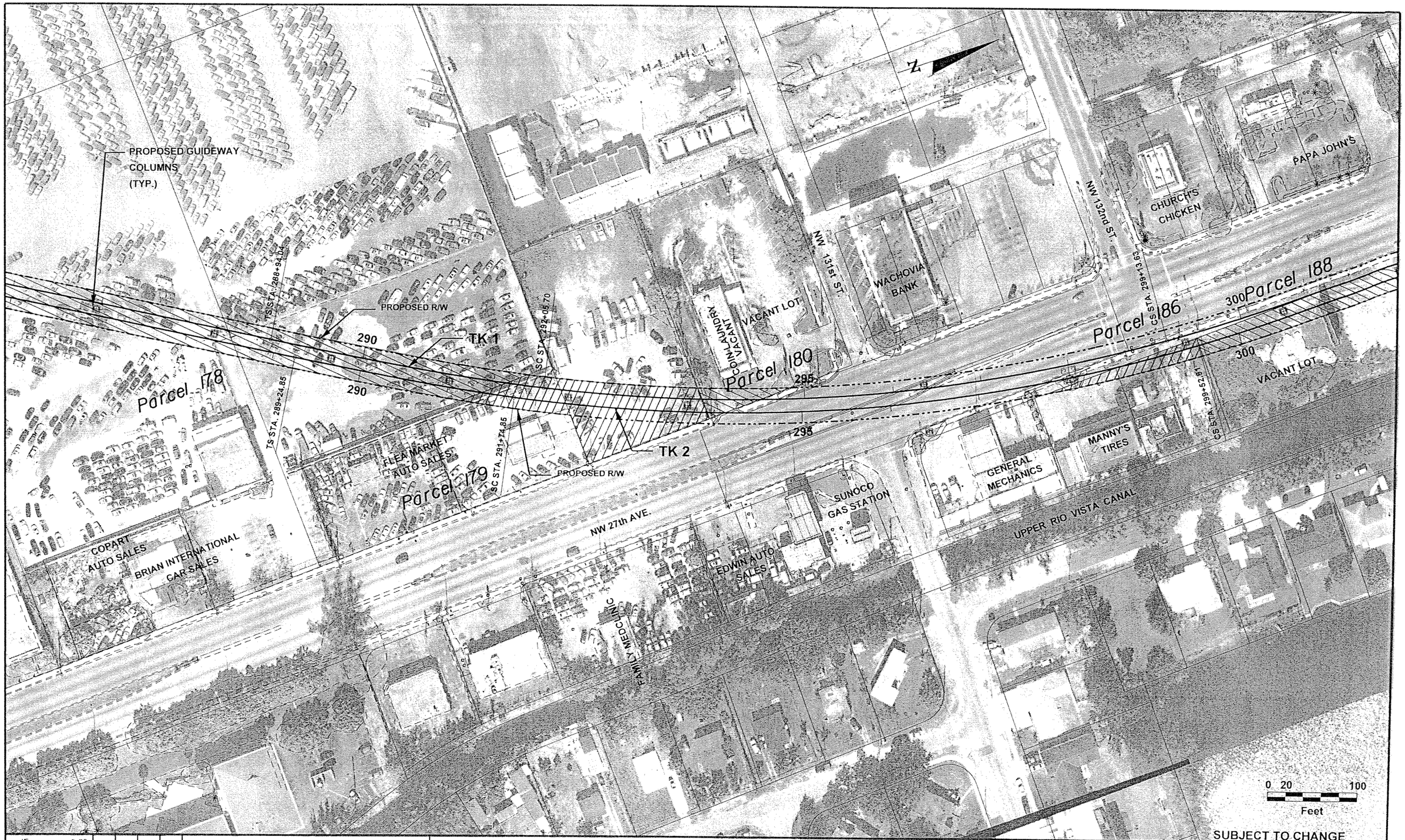

SUBJECT TO CHANGE

JE	5-06						
Designed by	Date						
KJ	5-06						
Drawn by	Date						
FB	5-06						
Checked by	Date						
Approved by	Date	No.	Date	By / Chk	App.	Revisions	

NORTH CORRIDOR METRORAIL EXTENSION - PRELIMINARY ENGINEERING (100% SUBMITTAL)

REAL ESTATE ACQUISITION

MIAMI-DADE COUNTY

MIAMI-DADE TRANSIT

PARSONS
7500 CORPORATE CENTER DRIVE, SUITE 500
MIAMI, FLORIDA 33126
PHONE: (786) 464-1000 FAX: (786) 845-7119
CERTIFICATE OF AUTHORIZATION NO. 1838

Approved | Date | Approved | Date

PARCEL PLANS

Scale 1"=100 | Drawing REA-15 | Sheet 134

05/10/2006 12:14:34 PM S:\MDT_NORTH\owman\owdet15.dgn

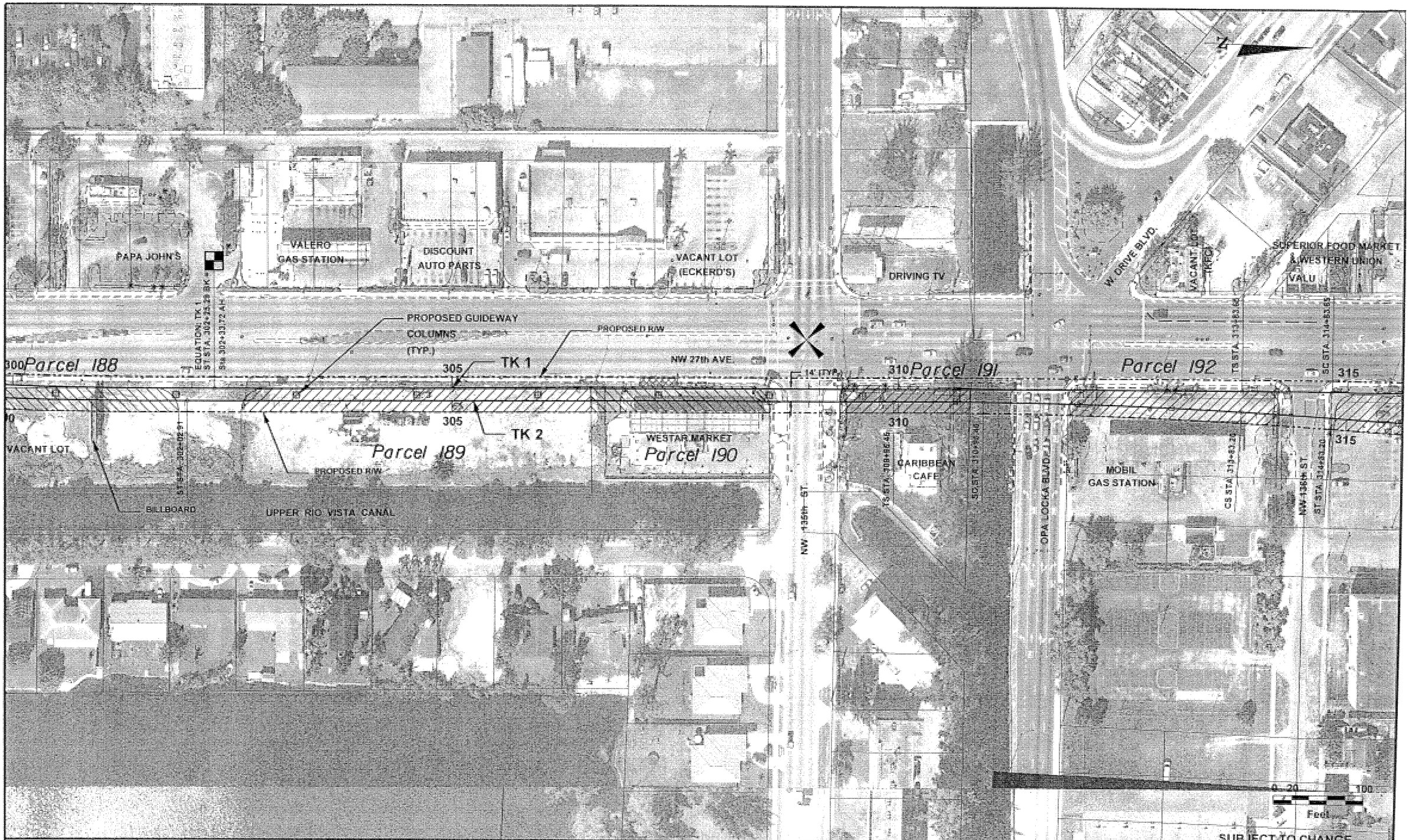

JE	5-06					
Designed by	Date					
KJ	5-06					
Drawn by	Date					
FB	5-06					
Checked by	Date					
Approved by	Date	No.	Date	By	App.	Revisions

NORTH CORRIDOR METRORAIL EXTENSION - PRELIMINARY ENGINEERING (100% SUBMITTAL)

MIAMI-DADE COUNTY

MIAMI-DADE TRANSIT

PARSONS
7600 CORPORATE CENTER DRIVE, SUITE 500
MIAMI, FLORIDA 33126
PHONE: (786) 464-1000 FAX: (786) 845-7119
CERTIFICATE OF AUTHORIZATION NO. 1638

Approved | Date | Approved | Date

REAL ESTATE ACQUISITION

PARCEL PLANS

Scale 1"=100 | Drawing REA - 16 | Sheet 135

05/10/2006 12:14:55 PM S:\MDT_NORTH\mmap\rwdm16.dgn

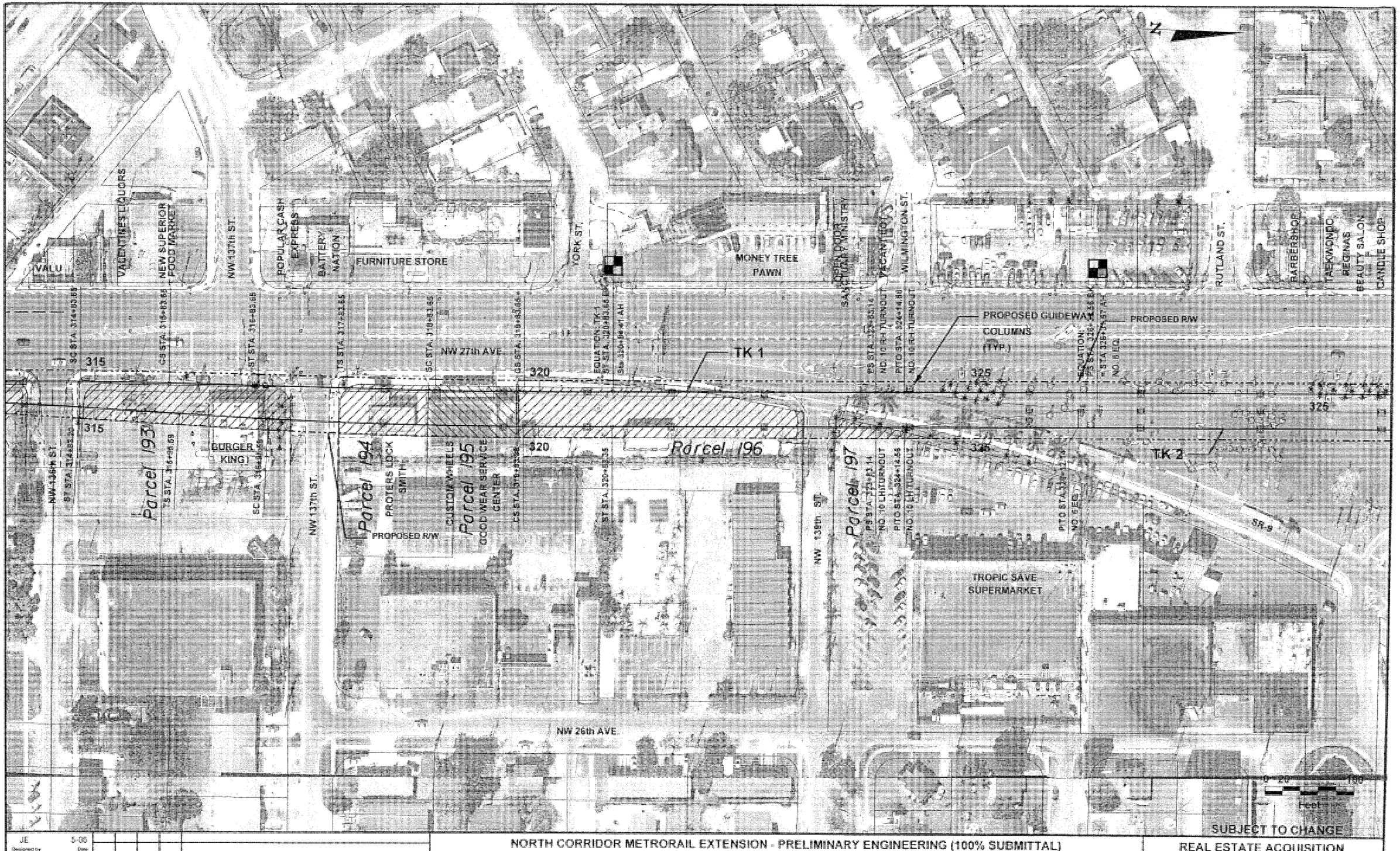

JE	5-06					
Designed by	Date					
KJ	5-06					
Drawn by	Date					
FB	5-06					
Checked by	Date					
Approved by	Date	No.	Date	By / Chk	App	Revisions

NORTH CORRIDOR METRORAIL EXTENSION - PRELIMINARY ENGINEERING (100% SUBMITTAL)

MIAMI-DADE COUNTY

MIAMI-DADE TRANSIT

PARSONS
7600 CORPORATE CENTER DRIVE, SUITE 500
MIAMI, FLORIDA 33126
PHONE: (786) 464-1000 FAX: (786) 845-7119
CERTIFICATE OF AUTHORIZATION NO. 1838

Approved | Date | Approved | Date

REAL ESTATE ACQUISITION

PARCEL PLANS

Scale 1"=100 | Drawing REA - 17 | Sheet 36

05/10/2006 12:18:14 PM S:\MDT_NORTH\newsuperwide\17.dgn

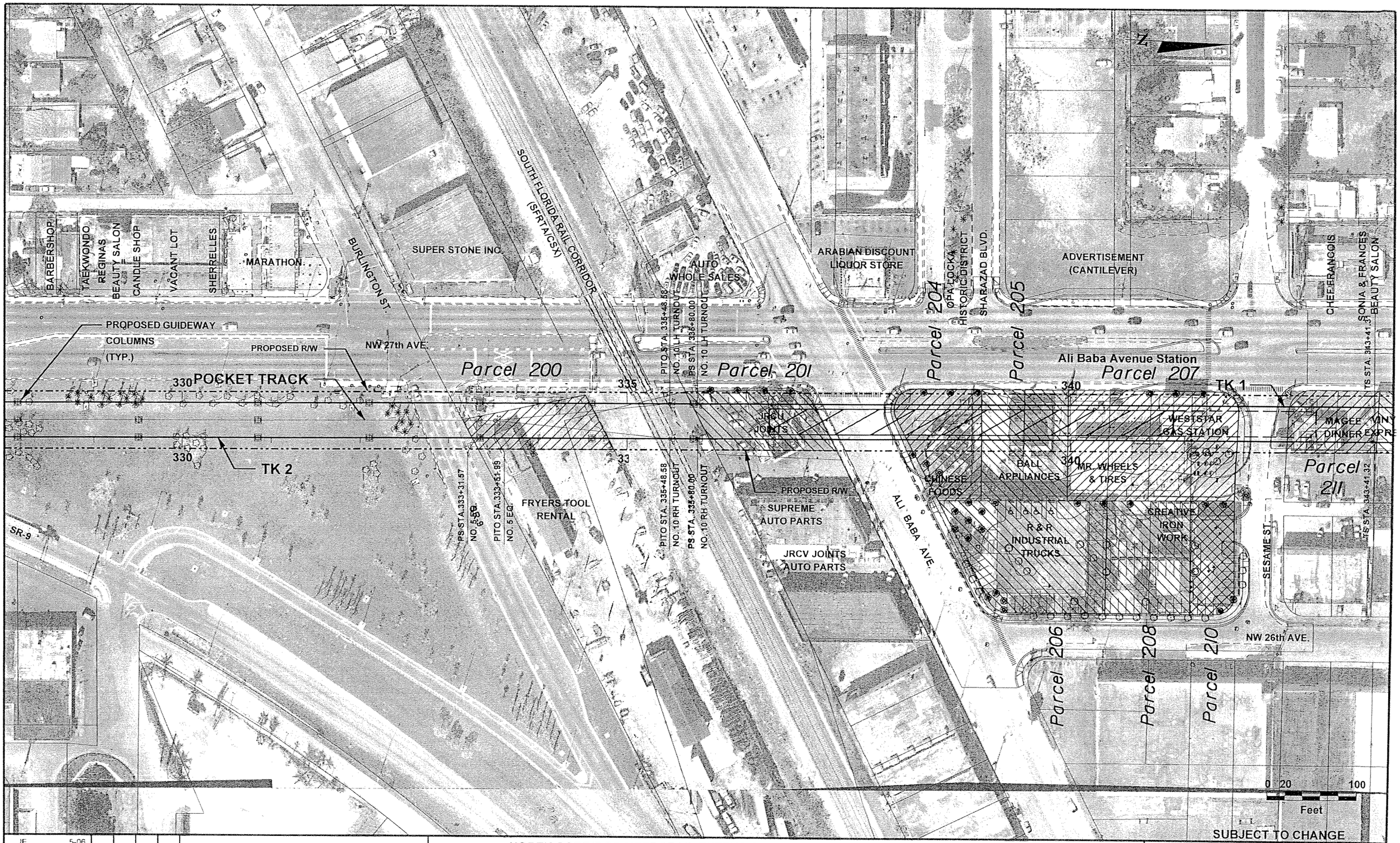

JE	5-06						
Designed by	Date						
KJ	5-06						
Drawn by	Date						
FB	5-06						
Checked by	Date						
Approved by	Date	No.	Date	By / Chk.	App.	Revisions	

NORTH CORRIDOR METRORAIL EXTENSION - PRELIMINARY ENGINEERING (100% SUBMITTAL)

REAL ESTATE ACQUISITION

MIAMI-DADE COUNTY

MIAMI-DADE TRANSIT

PARSONS
7600 CORPORATE CENTER DRIVE, SUITE 500
MIAMI, FLORIDA 33126
PHONE: (786) 464-1000 FAX: (786) 845-7119
CERTIFICATE OF AUTHORIZATION NO. 1838

Approved | Date

Approved | Date

PARCEL PLANS

Scale 1"=100 | Drawing REA - 18 | Sheet 137

05/10/2006 12:15:38 PM S:\MDT_NORTH\mxd\rwdetl18.dgn

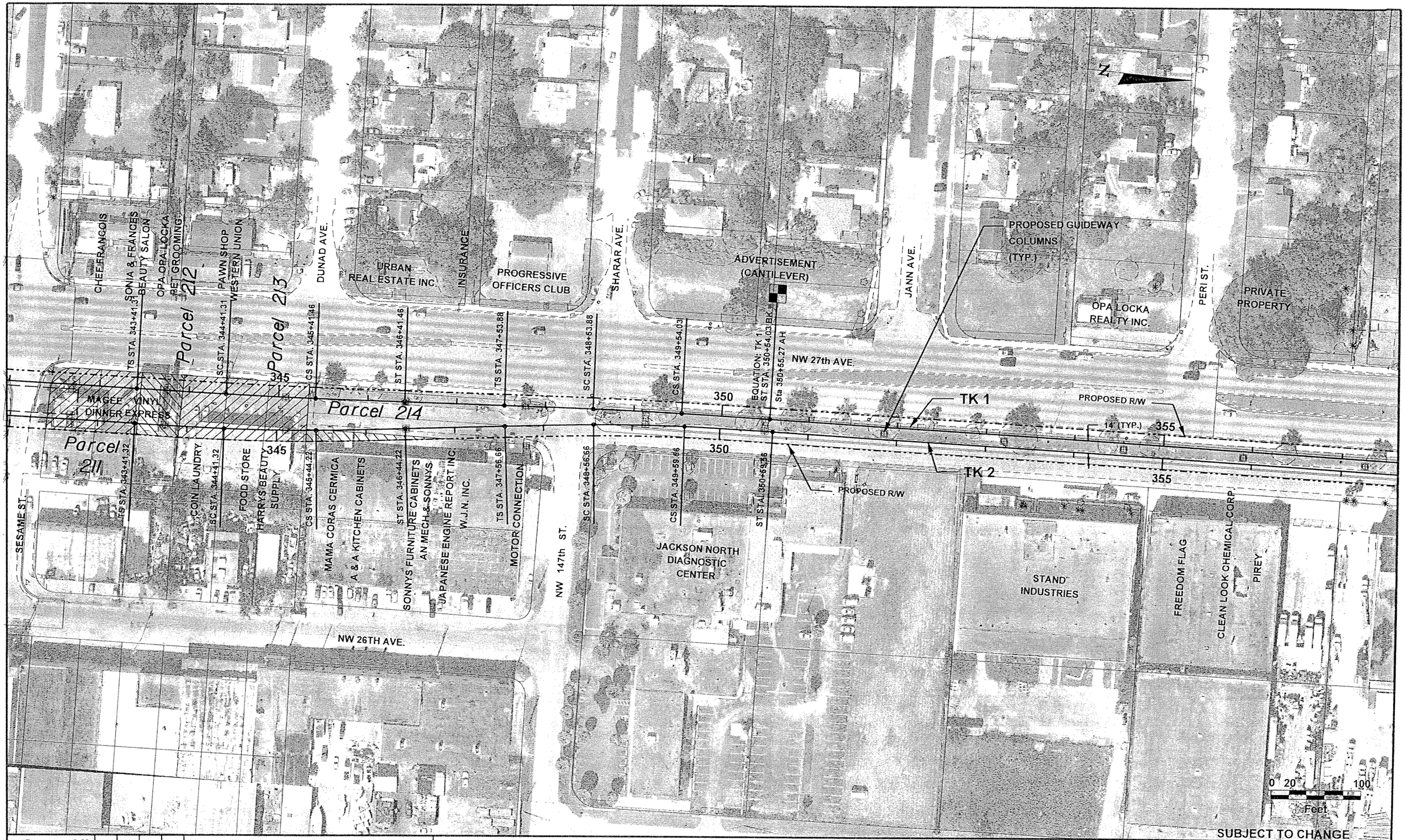

JE	5-06						
Designed by	Date						
KJ	5-06						
Drawn by	Date						
FB	5-06						
Checked by	Date						
Approved by	Date	No.	Date	By / Chk	App.	Revisions	

NORTH CORRIDOR METRORAIL EXTENSION - PRELIMINARY ENGINEERING (100% SUBMITTAL)

REAL ESTATE ACQUISITION

MIAMI-DADE COUNTY

MIAMI-DADE TRANSIT

PARSONS
7600 CORPORATE CENTER DRIVE, SUITE 500
MIAMI, FLORIDA 33126
PHONE: (786) 464-1000 FAX: (786) 845-7119
CERTIFICATE OF AUTHORIZATION NO. 1838

Approved | Date | Approved | Date

PARCEL PLANS

Scale 1"=100 | Drawing REA - 19 | Sheet 138

05/10/2006 12:16:04 PM S:\MDT_NORTH\rwmaps\rwdet19.dgn

PRIVATE PROPERTY

THE LEARNING SCHOOL DAY CARE

KASIM ST.

ST. ANDREW MISSIONARY CHURCH

PROPOSED GUIDEWAY COLUMNS (TYP.)

HERE'S HELP INC.

BASEBALL FIELD

BUNCHIE MD COUNTY FIRE DEP. PARK FIRE RESCUE

VEHICLE STORAGE

STORAGE

N

PROPOSED R/W

TS STA. 362+26.81

SC STA. 364+43.63

CS STA. 367+55.67

EQUATION: TK-1 ST STA. 369+72.55 BK = ST STA. 369+74.47 AH

Sta 369+74.47 AH

360

365

370

14' (TYP.)

TK 1

TK 2

NW 27th AVE.

PIREY

KEPCO

JACKSON MEMORIAL HEALTH CENTER

Irying

NW 151st ST.

TS STA. 362+85.25

SC STA. 364+85.25

NW 152nd ST.

RESIDENTIAL

NW 152nd Ter

CS STA. 368+16.03

ST STA. 369+16.03

NW 153rd ST.

0 20 100

Feet

SUBJECT TO CHANGE

JE	5-06					
Designed by	Date					
KJ	5-06					
Drawn by	Date					
FB	5-06					
Checked by	Date					
Approved by	Date	No.	Date	By / Chk	App.	Revisions

NORTH CORRIDOR METRORAIL EXTENSION - PRELIMINARY ENGINEERING (100% SUBMITTAL)

REAL ESTATE ACQUISITION

MIAMI-DADE COUNTY

MIAMI-DADE TRANSIT

PARSONS
7600 CORPORATE CENTER DRIVE, SUITE 500
MIAMI, FLORIDA 33126
PHONE: (786) 454-1000 FAX: (786) 845-7119
CERTIFICATE OF AUTHORIZATION NO. 1838

Approved | Date | Approved | Date

PARCEL PLANS

Scale 1"=100 | Drawing REA - 20 | Sheet 139

05/10/2006 12:16:26 PM S:\MDT_NORTH\rwmap\rwdet120.dgn

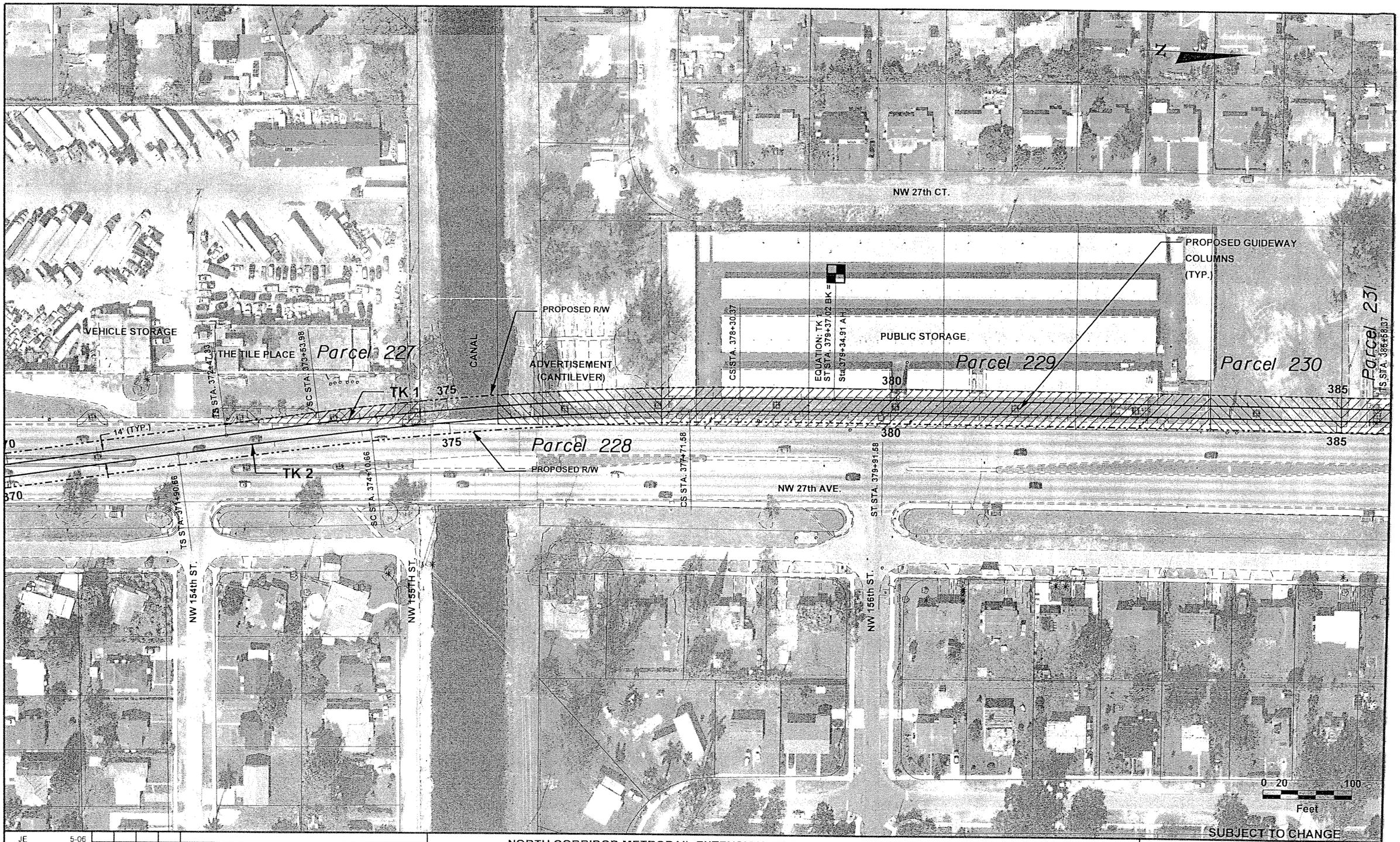

JE	5-06					
Designed by	Date					
KJ	5-05					
Drawn by	Date					
FB	5-06					
Checked by	Date					
Approved by	Date	No.	Date	By / Chk	App.	Revisions

NORTH CORRIDOR METRORAIL EXTENSION - PRELIMINARY ENGINEERING (100% SUBMITTAL)

REAL ESTATE ACQUISITION

MIAMI-DADE COUNTY

MIAMI-DADE TRANSIT

PARSONS
7600 CORPORATE CENTER DRIVE, SUITE 500
MIAMI, FLORIDA 33126
PHONE: (786) 464-1000 FAX: (786) 845-7119
CERTIFICATE OF AUTHORIZATION NO. 1838

Approved | Date

Approved | Date

PARCEL PLANS

Scale 1"=100 | Drawing REA - 21 | Sheet 140

05/10/2006 12:16:44 PM S:\MDT_NORTH\rwmap\rwdet21.dgn

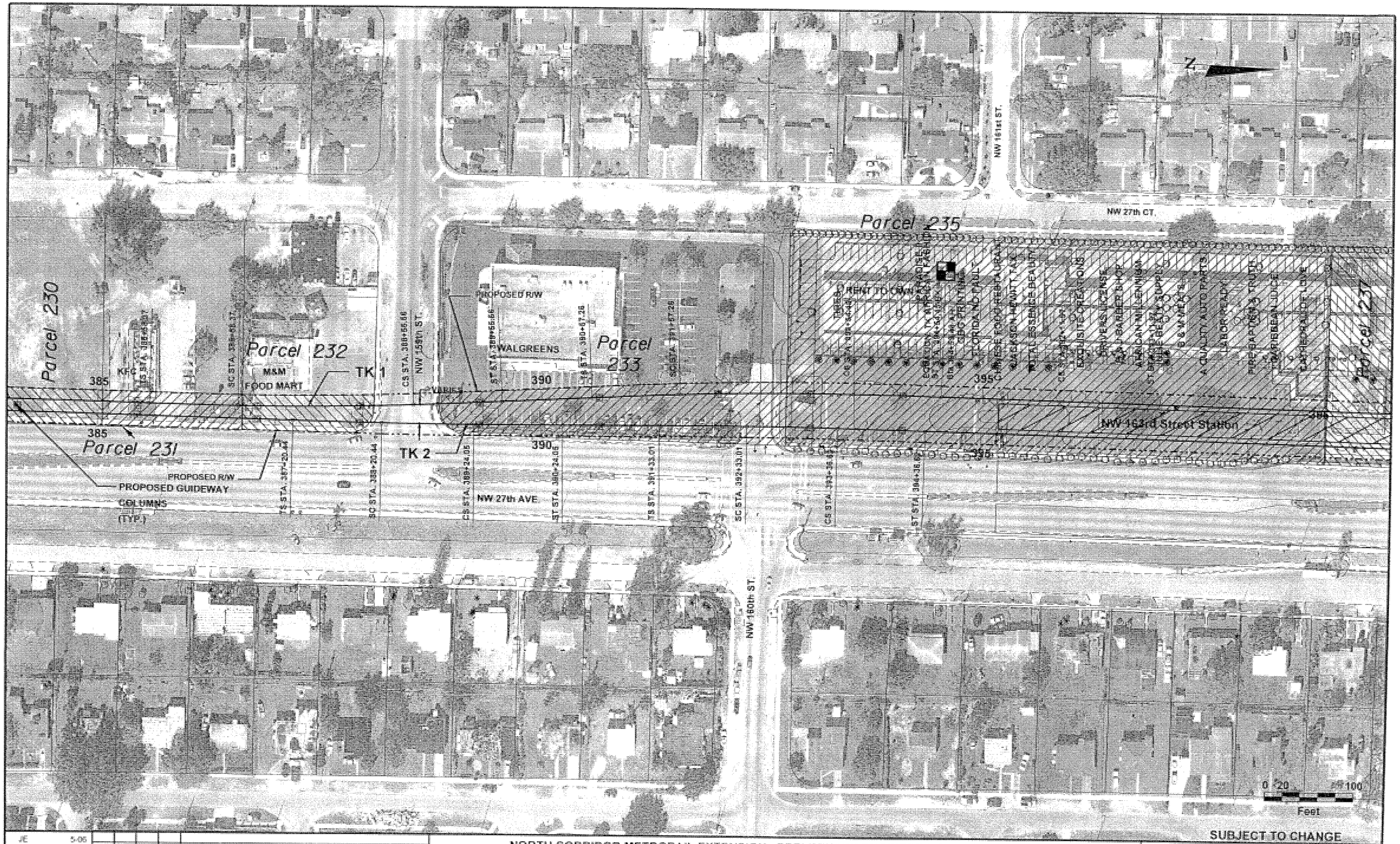

JE	5-06					
Designed by	Date					
KJ	5-06					
Drawn by	Date					
FB	5-06					
Checked by	Date					
Approved by	Date	No.	Date	By	Rev.	Revisions

NORTH CORRIDOR METRORAIL EXTENSION - PRELIMINARY ENGINEERING (100% SUBMITTAL)

REAL ESTATE ACQUISITION

MIAMI-DADE COUNTY

MIAMI-DADE TRANSIT

PARSONS
7800 CORPORATE CENTER DRIVE, SUITE 500
MIAMI, FLORIDA 33126
PHONE: (786) 464-1000 FAX: (786) 845-7119
CERTIFICATE OF AUTHORIZATION NO. 1836

Approved | Date | Approved | Date

PARCEL PLANS

Scale 1"=100' | Drawing REA - 22 | Sheet 4

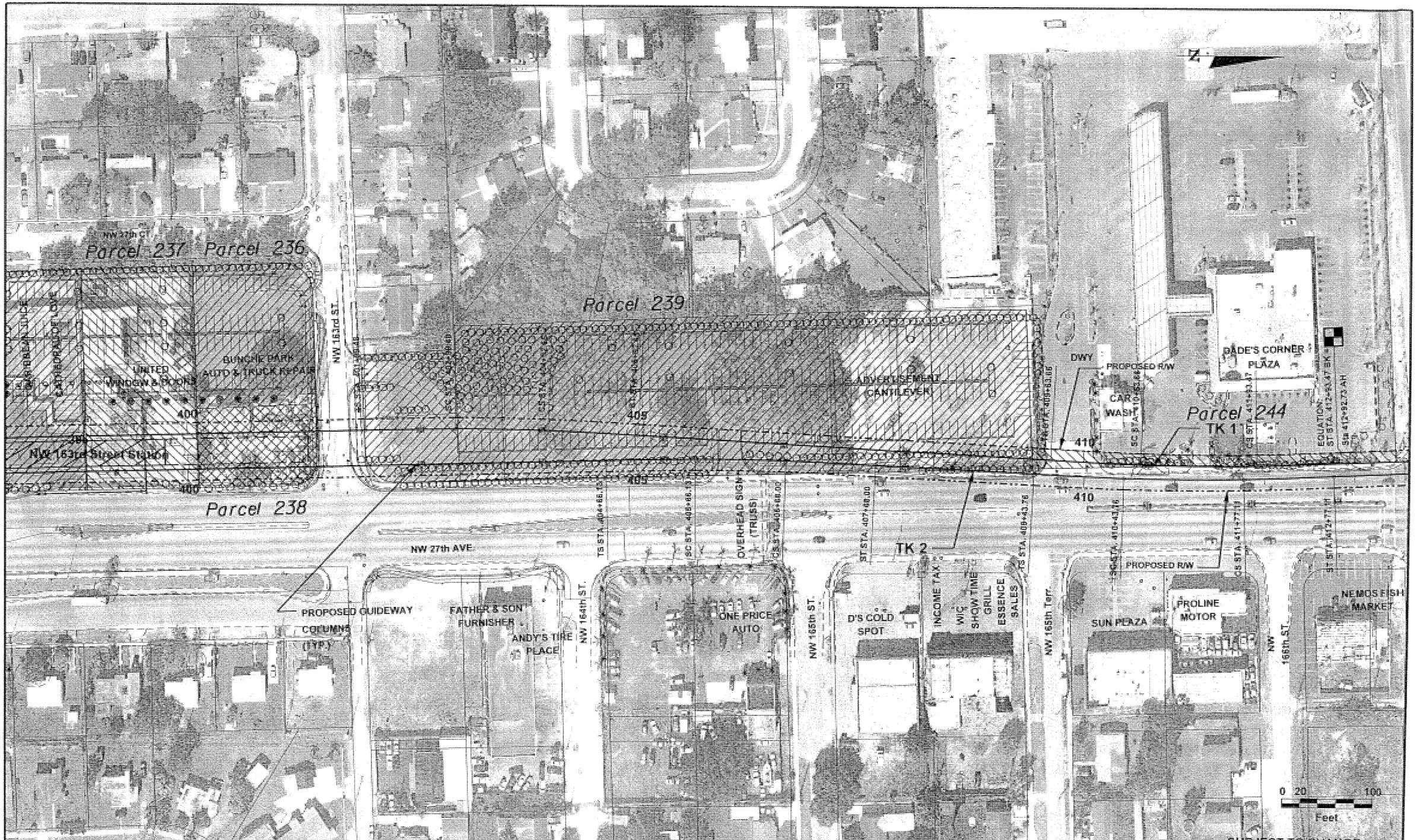

JE	5-06					
Designed by	Date					
KJ	5-06					
Drawn by	Date					
FB	5-06					
Checked by	Date					
Approved by	Date	No.	Date	By / Chk	App.	Revisions

NORTH CORRIDOR METRORAIL EXTENSION - PRELIMINARY ENGINEERING (100% SUBMITTAL)

MIAMI-DADE COUNTY

MIAMI-DADE TRANSIT

PARSONS
7500 CORPORATE CENTER DRIVE, SUITE 500
MIAMI, FLORIDA 33126
PHONE: (786) 464-1000 FAX: (786) 645-7119
CERTIFICATE OF AUTHORIZATION NO. 1838

Approved | Date | Approved | Date

REAL ESTATE ACQUISITION

PARCEL PLANS

Scale 1"=100 | Drawing REA - 23 | Sheet 142

05/10/2006 12:17:27 PM S:\MDT_NORTH\...\REA-23.dgn

JE	5-06					
Designed by	Date					
KJ	5-06					
Drawn by	Date					
FB	5-06					
Checked by	Date					
Approved by	Date	No.	Date	By	App.	Revisions

NORTH CORRIDOR METRORAIL EXTENSION - PRELIMINARY ENGINEERING (100% SUBMITTAL)

MIAMI-DADE COUNTY

MIAMI-DADE TRANSIT

PARSONS
7800 CORPORATE CENTER DRIVE, SUITE 500
MIAMI, FLORIDA 33126
PHONE: (786) 464-1000 FAX: (786) 645-7119
CERTIFICATE OF AUTHORIZATION NO. 1838

Approved | Date | Approved | Date

REAL ESTATE ACQUISITION

PARCEL PLANS

Scale 1"=100 | Drawing REA - 24 | Sheet 143

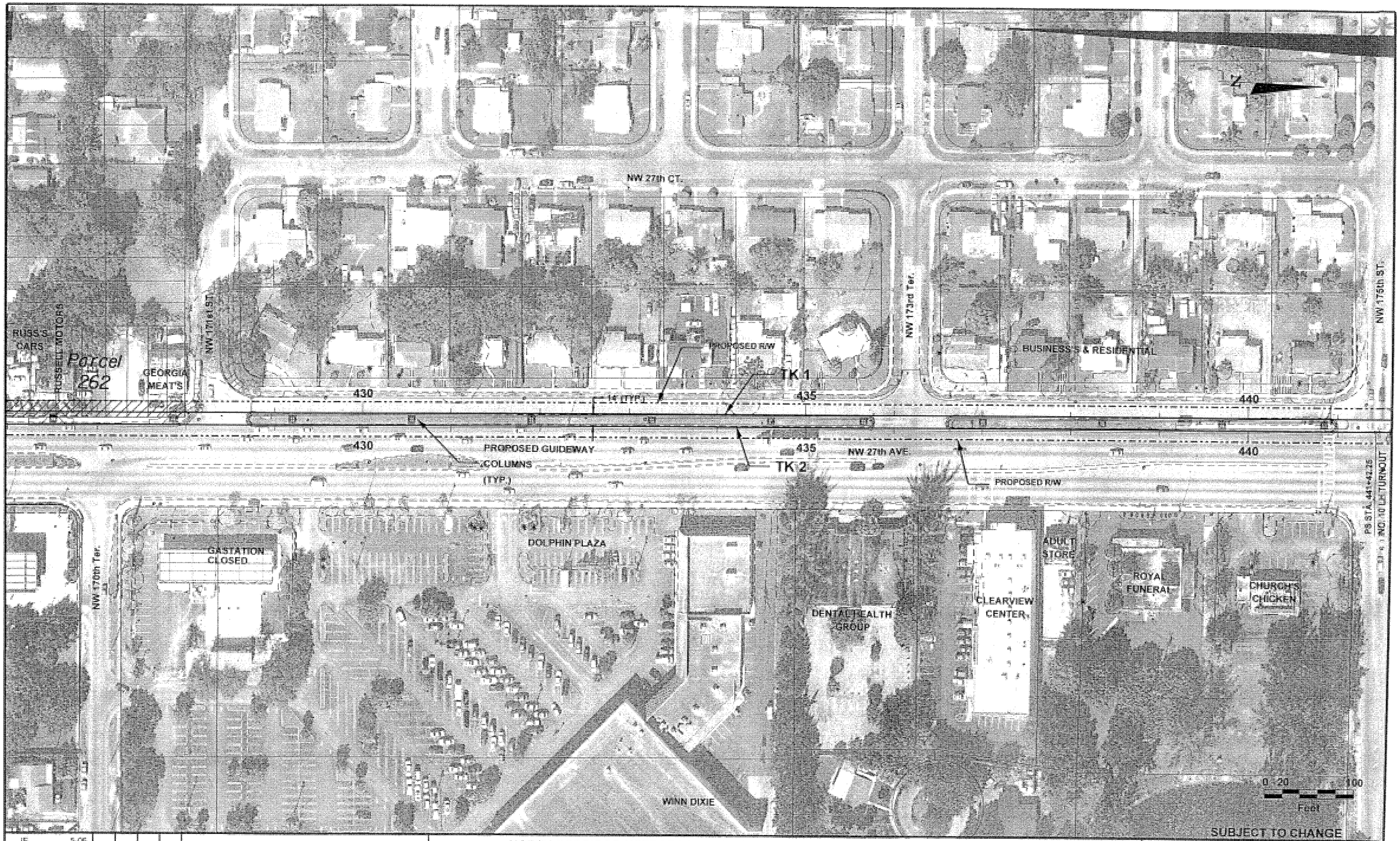

JE	5-06					
Designed by	Date					
KJ	5-06					
Drawn by	Date					
FB	5-06					
Checked by	Date					
Approved by	Date	No.	Date	By	App.	Revisions

NORTH CORRIDOR METRORAIL EXTENSION - PRELIMINARY ENGINEERING (100% SUBMITTAL)

MIAMI-DADE COUNTY

MIAMI-DADE TRANSIT

PARSONS
7600 CORPORATE CENTER DRIVE, SUITE 500
MIAMI, FLORIDA 33126
PHONE: (786) 464-1000 FAX: (786) 845-7119
CERTIFICATE OF AUTHORIZATION NO. 1838

Approved | Date | Approved | Date

REAL ESTATE ACQUISITION

PARCEL PLANS

Scale 1"=100 | Drawing REA - 25 | Sheet

05/16/2006 12:18:08 PM S:\MDT WORTH\mmiami\mdt\mdt625.dgn

SUBJECT TO CHANGE

JE	5-06					
Designed by	Date					
KJ	5-06					
Drawn by	Date					
FB	5-06					
Checked by	Date					
Approved by	Date	No.	Date	By / Chk.	App.	Revisions

NORTH CORRIDOR METRORAIL EXTENSION - PRELIMINARY ENGINEERING (100% SUBMITTAL)

REAL ESTATE ACQUISITION

MIAMI-DADE COUNTY

MIAMI-DADE TRANSIT

PARSONS
7600 CORPORATE CENTER DRIVE, SUITE 500
MIAMI, FLORIDA 33125
PHONE: (786) 464-1000 FAX: (786) 845-7119
CERTIFICATE OF AUTHORIZATION NO. 1838

Approved | Date | Approved | Date

PARCEL PLANS

Scale 1"=100 | Drawing REA - 26 | Sheet 145

05/10/2006 12:18:29 PM S:\MDT_NORTH\rwmap\rwded26.dgn

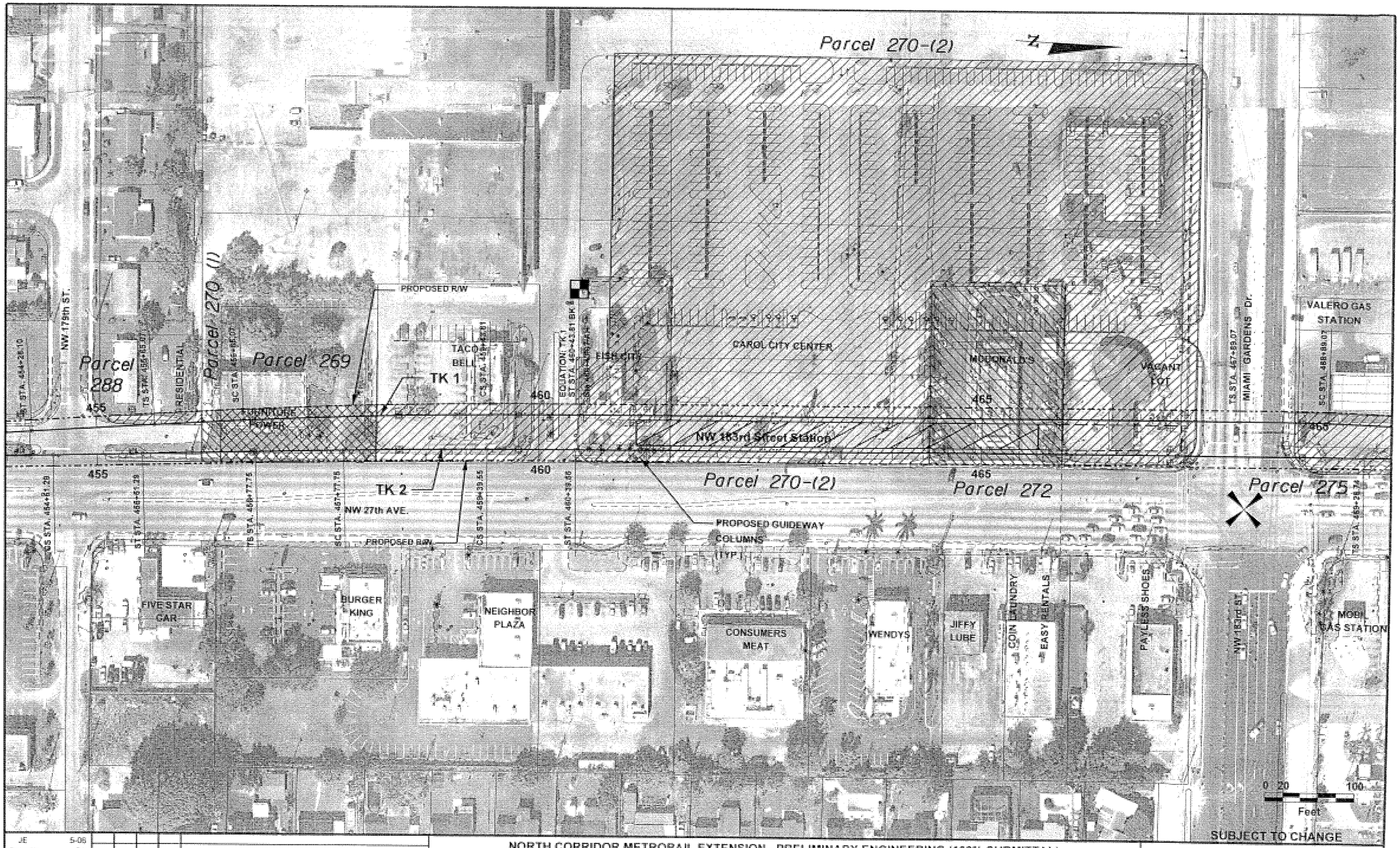

JE	5-06					
Designed by	Date					
KJ	5-06					
Drawn by	Date					
FB	5-06					
Checked by	Date					
Approved by	Date	No.	Date	By / Chk	Apd	Revisions

NORTH CORRIDOR METRORAIL EXTENSION - PRELIMINARY ENGINEERING (100% SUBMITTAL)

MIAMI-DADE COUNTY

MIAMI-DADE TRANSIT

PARSONS
7600 CORPORATE CENTER DRIVE, SUITE 500
MIAMI, FLORIDA 33126
PHONE: (786) 464-1000 FAX: (786) 645-7119
CERTIFICATE OF AUTHORIZATION NO. 1838

Approved | Date | Approved | Date

REAL ESTATE ACQUISITION

PARCEL PLANS

Scale: 1"=100 | Drawing: REA - 27 | Sheet: 46

05/19/2006 12:18:32 PM

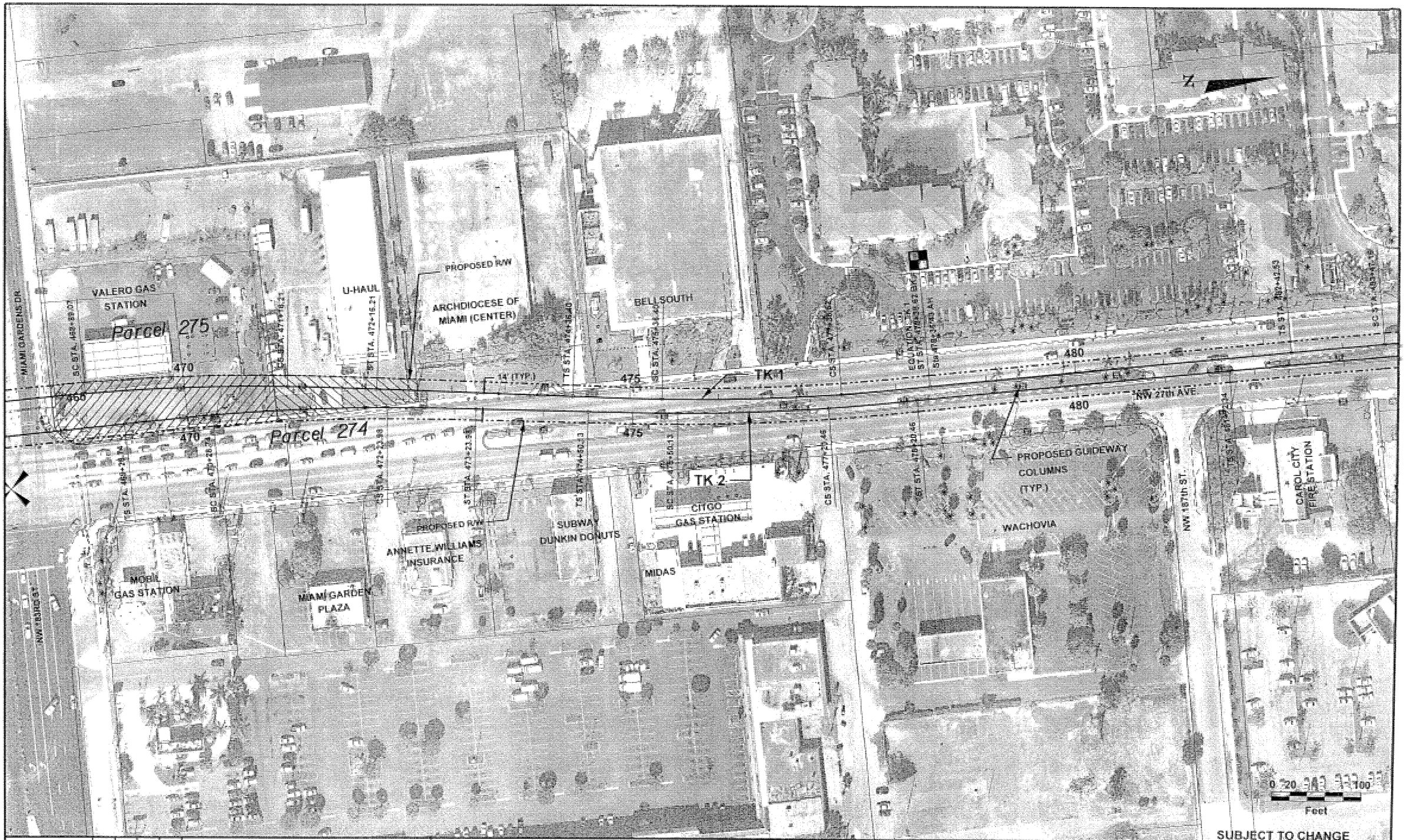

SUBJECT TO CHANGE

JE	5-06					
Designed by	Date					
KJ	5-06					
Drawn by	Date					
FB	5-06					
Checked by	Date					
Approved by	Date	No.	Date	By / Chk	App.	Revisions

NORTH CORRIDOR METRORAIL EXTENSION - PRELIMINARY ENGINEERING (100% SUBMITTAL)

MIAMI-DADE COUNTY

MIAMI-DADE TRANSIT

PARSONS
7600 CORPORATE CENTER DRIVE, SUITE 500
MIAMI, FLORIDA 33126
PHONE: (786) 464-1000 FAX: (786) 845-7119
CERTIFICATE OF AUTHORIZATION NO. 1838

Approved | Date | Approved | Date

REAL ESTATE ACQUISITION

PARCEL PLANS

Scale 1"=100 | Drawing REA - 28 | Sheet 47

05/10/2006 12:10:14 PM S:\MDT_NORTH\mmaplyadel08.dwg

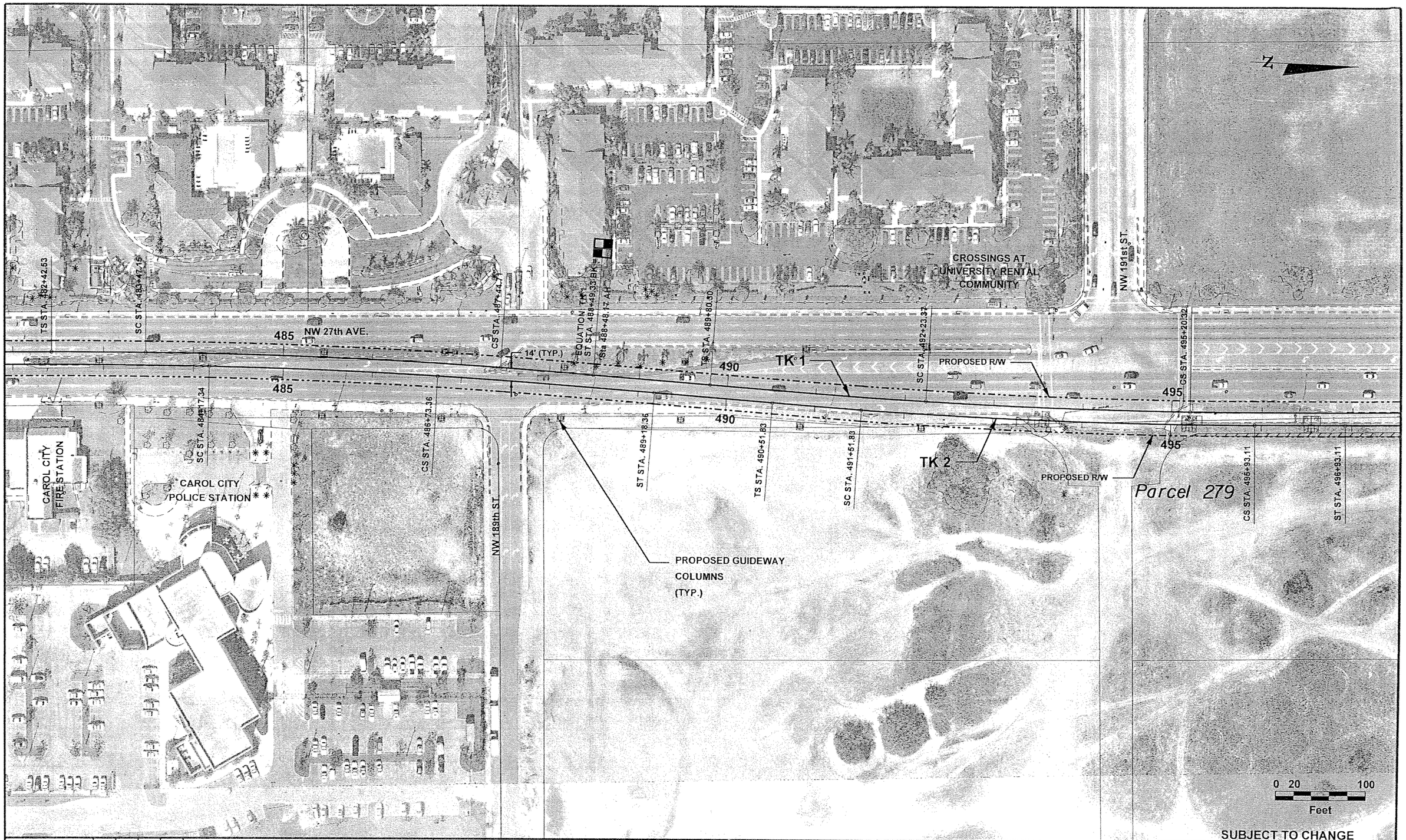

SUBJECT TO CHANGE

JE	5-06						
Designed by	Date						
KJ	5-06						
Drawn by	Date						
FB	5-06						
Checked by	Date						
Approved by	Date	No.	Date	By / Chk.	App.	Revisions	

NORTH CORRIDOR METRORAIL EXTENSION - PRELIMINARY ENGINEERING (100% SUBMITTAL)

REAL ESTATE ACQUISITION

MIAMI-DADE COUNTY

MIAMI-DADE TRANSIT

PARSONS
7600 CORPORATE CENTER DRIVE, SUITE 500
MIAMI, FLORIDA 33126
PHONE: (786) 464-1000 FAX: (786) 845-7119
CERTIFICATE OF AUTHORIZATION NO. 1838

Approved	Date	Approved	Date

PARCEL PLANS

Scale 1"=100 | Drawing REA- 29 | Sheet 148

05/10/2006 12:19:33 PM S:\MDT_NORTH\rwmap\rwdetl29.dgn

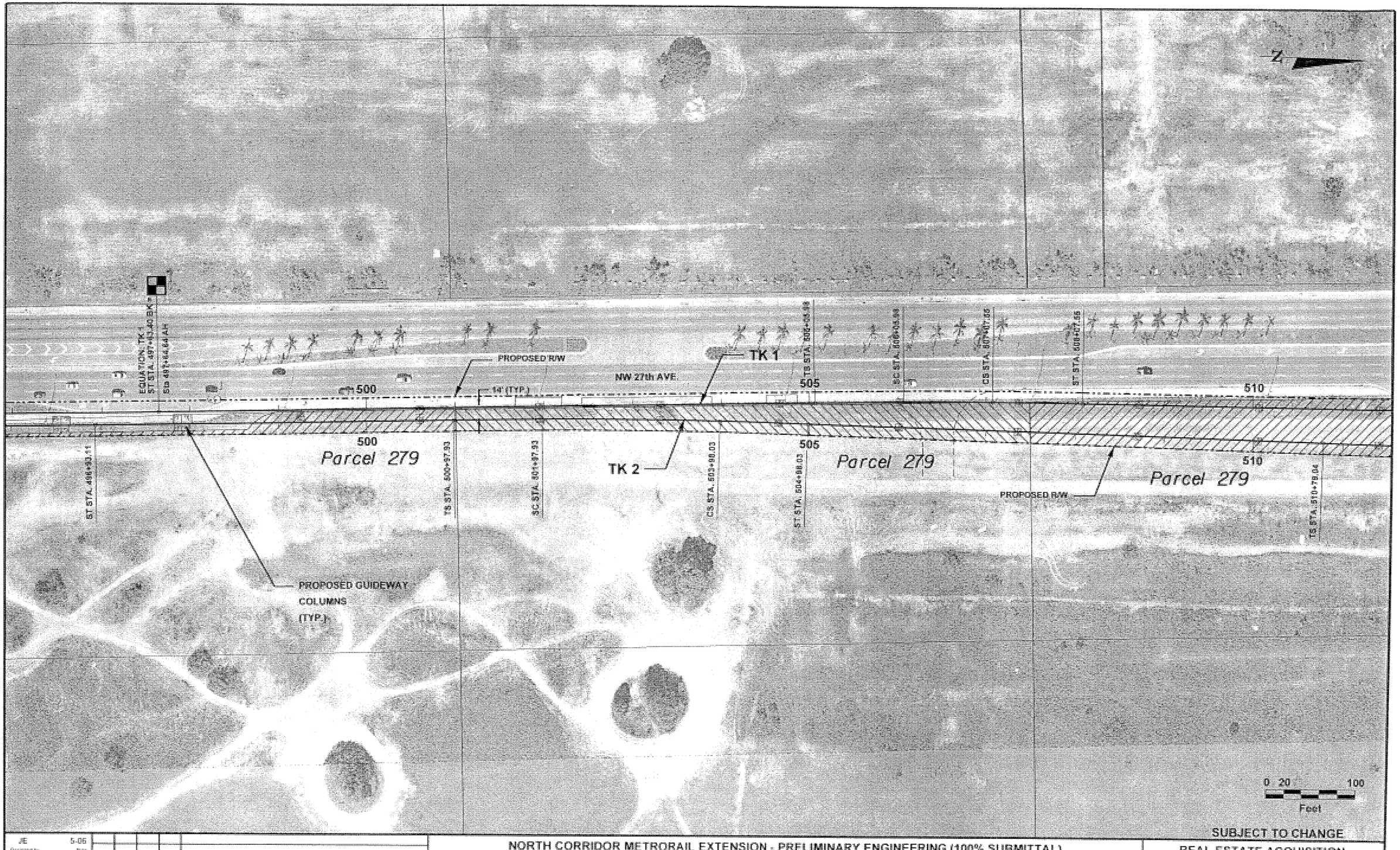

SUBJECT TO CHANGE

JE	5-06					
Designed by	Date					
KJ	5-06					
Drawn by	Date					
FB	5-06					
Checked by	Date					
Approved by	Date	No.	Date	By / Chk	App	Revisions

NORTH CORRIDOR METRORAIL EXTENSION - PRELIMINARY ENGINEERING (100% SUBMITTAL)

MIAMI-DADE COUNTY

MIAMI-DADE TRANSIT

PARSONS
7600 CORPORATE CENTER DRIVE, SUITE 500
MIAMI, FLORIDA 33126
PHONE: (786) 464-1000 FAX: (786) 845-7119
CERTIFICATE OF AUTHORIZATION NO. 1638

Approved | Date | Approved | Date

REAL ESTATE ACQUISITION

PARCEL PLANS

Scale 1"=100 | Drawing REA - 30 | Sheet 1 of 1

05/16/2006 12:19:52 PM S:\MDT WORTH\ws\sublevel\600.dgn

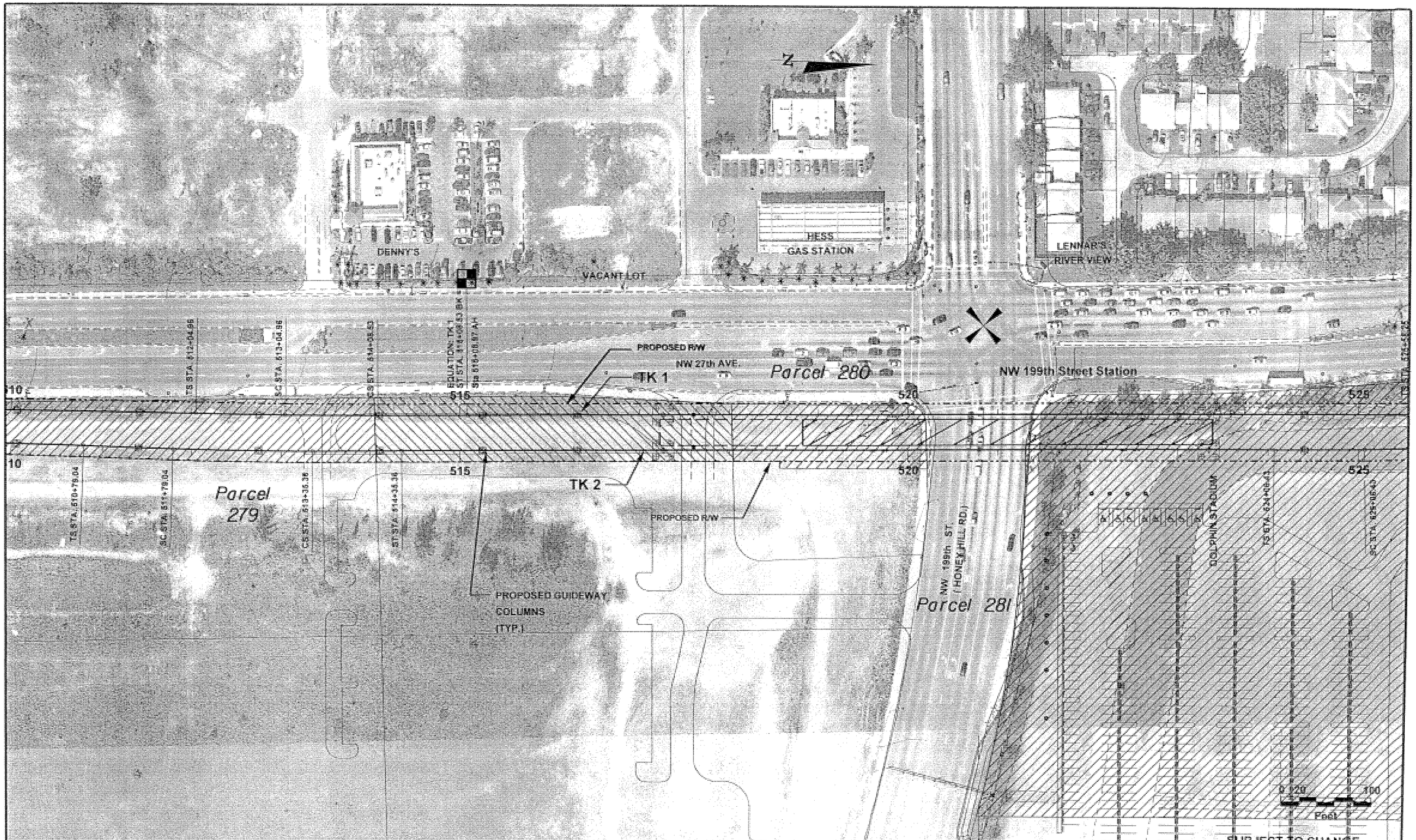

JE	5-06					
Designed by	Date					
KJ	5-06					
Drawn by	Date					
FB	5-06					
Checked by	Date					
Approved by	Date	No.	Date	By / Chk	App.	Revisions

NORTH CORRIDOR METRORAIL EXTENSION - PRELIMINARY ENGINEERING (100% SUBMITTAL)

MIAMI-DADE COUNTY

MIAMI-DADE TRANSIT

PARSONS
7900 CORPORATE CENTER DRIVE, SUITE 500
MIAMI, FLORIDA 33126
PHONE: (786) 464-1000 FAX: (786) 845-7119
CERTIFICATE OF AUTHORIZATION NO. 1638

Approved | Date | Approved | Date

REAL ESTATE ACQUISITION

PARCEL PLANS

Scale 1"=100 | Drawing REA - 31 | Sheet 150

05/10/2006 12:20:13 PM S:\MDT_NORTH\rwmapsreal031.dgn

SUBJECT TO CHANGE

JE	5-06					
Designed by	Date					
KJ	5-06					
Drawn by	Date					
FB	5-06					
Checked by	Date					
Approved by	Date	No.	Date	By	App.	Revisions

NORTH CORRIDOR METRORAIL EXTENSION - PRELIMINARY ENGINEERING (100% SUBMITTAL)

MIAMI-DADE COUNTY

MIAMI-DADE TRANSIT

PARSONS
7600 CORPORATE CENTER DRIVE, SUITE 500
MIAMI, FLORIDA 33126
PHONE: (786) 464-1000 FAX: (786) 845-7119
CERTIFICATE OF AUTHORIZATION NO. 1838

Approved | Date | Approved | Date

REAL ESTATE ACQUISITION

PARCEL PLANS

Scale 1"=100 | Drawing REA - 32 | Sheet 15

05/10/2006 12:28:36 PM S:\MDT NORTH\rwmap\rwmdat02.dgn

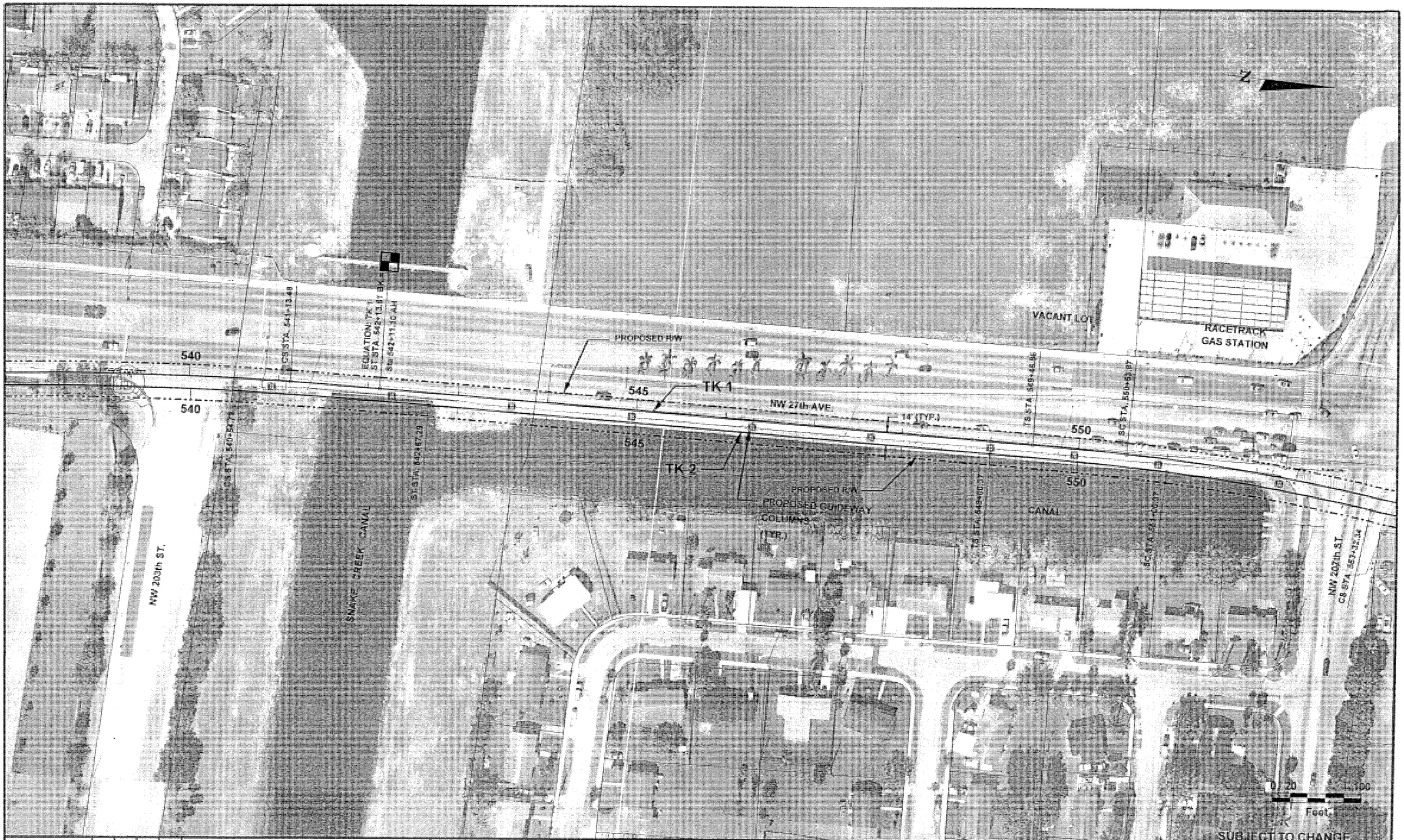

JE	5-06					
Designed by	Date					
KJ	5-06					
Drawn by	Date					
FB	5-06					
Checked by	Date					
Approved by	Date	No.	Date	By	App.	Revisions

NORTH CORRIDOR METRORAIL EXTENSION - PRELIMINARY ENGINEERING (100% SUBMITTAL)

MIAMI-DADE COUNTY

MIAMI-DADE TRANSIT

PARSONS
7600 CORPORATE CENTER DRIVE, SUITE 500
MIAMI, FLORIDA 33126
PHONE: (786) 464-1000 FAX: (786) 845-7119
CERTIFICATE OF AUTHORIZATION NO. 1838

Approved | Date | Approved | Date

REAL ESTATE ACQUISITION

PARCEL PLANS

Scale 1"=100 | Drawing REA - 33 | Sheet 152

09/10/2006 12:21:02 PM 3_8801_NORTHlowmapbrwdes33.dgn

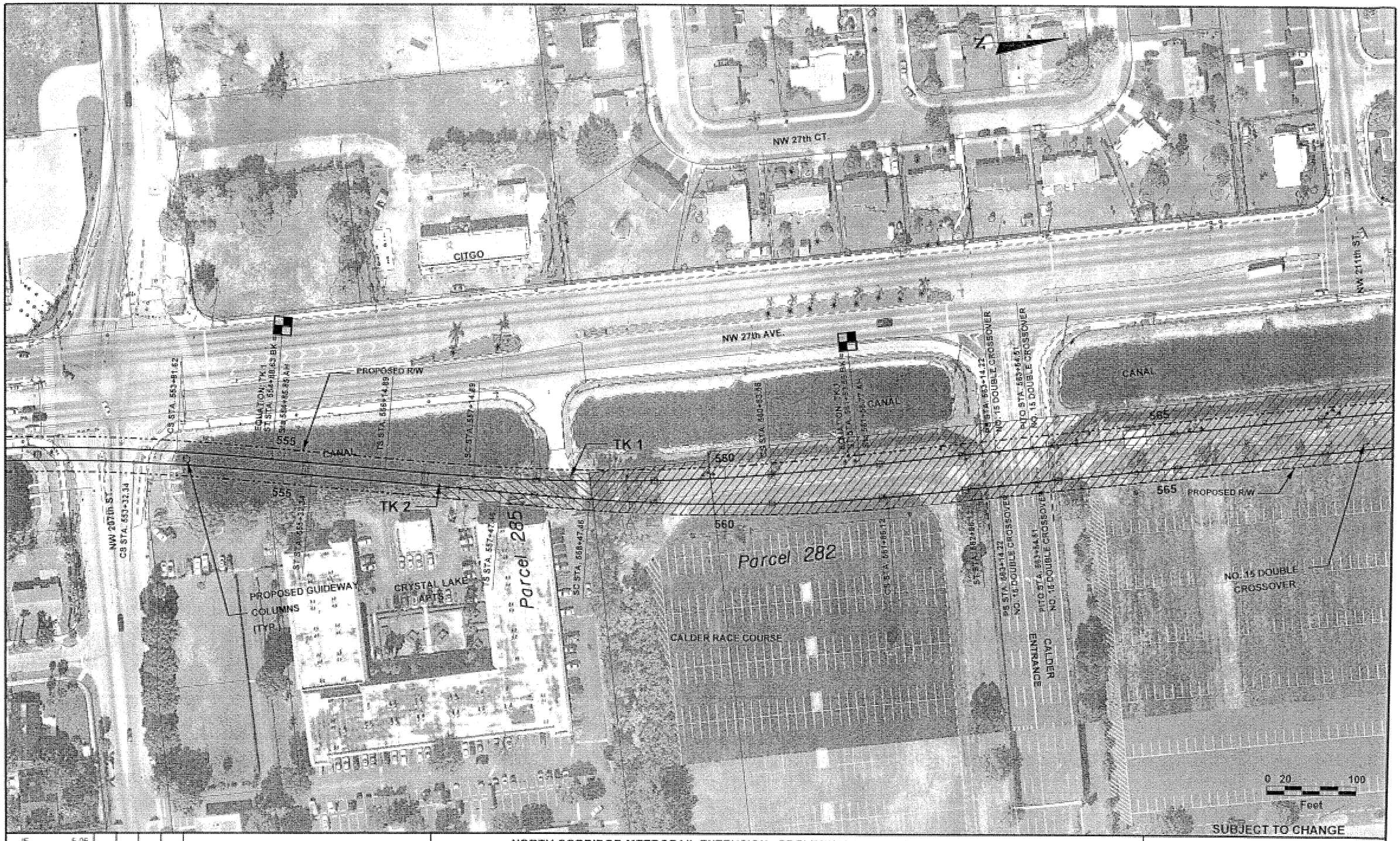

JE	5-06					
Designed by	Date					
KJ	5-06					
Drawn by	Date					
FB	5-06					
Checked by	Date					
Approved by	Date	No.	Date	By / Chk	App.	Revisions

NORTH CORRIDOR METRORAIL EXTENSION - PRELIMINARY ENGINEERING (100% SUBMITTAL)

MIAMI-DADE COUNTY

MIAMI-DADE TRANSIT

PARSONS
3800 CORPORATE CENTER DRIVE, SUITE 500
MIAMI, FLORIDA 33126
PHONE: (786) 464-1000 FAX: (786) 845-7119
CERTIFICATE OF AUTHORIZATION NO. 1838

Approved | Date | Approved | Date

REAL ESTATE ACQUISITION

PARCEL PLANS

Scale 1"=100 | Drawing REA - 34 | Sheet 153

05/10/2006 12:21:21 PM S:\MDT_NORTH\mmap\mdat34.dgn

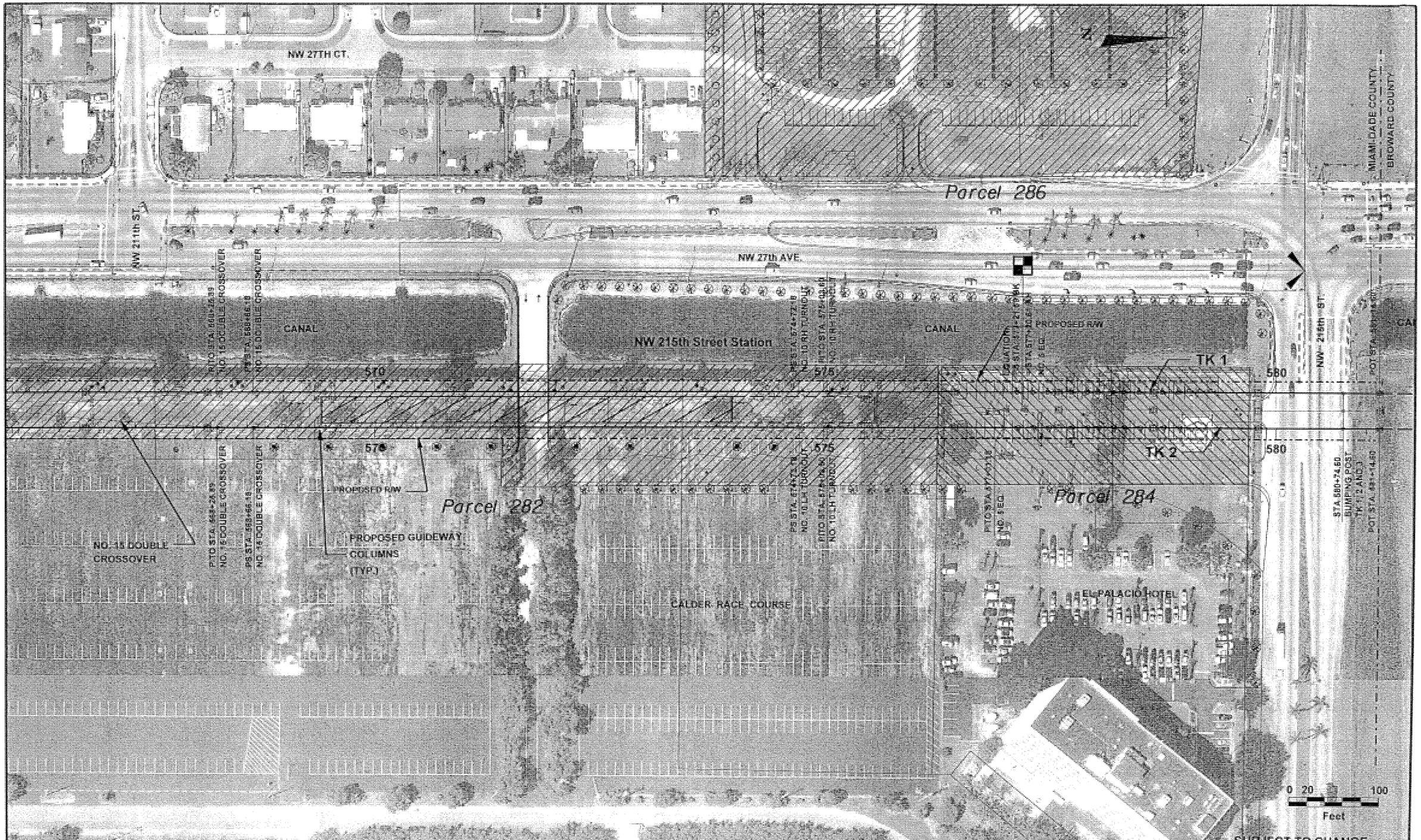

JE	5-06					
Designed by	Date					
KJ	5-06					
Drawn by	Date					
FB	5-06					
Checked by	Date					
Approved by	Date	No.	Date	By	App.	Revisions

NORTH CORRIDOR METRORAIL EXTENSION - PRELIMINARY ENGINEERING (100% SUBMITTAL)

MIAMI-DADE COUNTY

MIAMI-DADE TRANSIT

PARSONS
1600 CORPORATE CENTER DRIVE, SUITE 500
MIAMI, FLORIDA 33126
PHONE: (786) 464-1000 FAX: (786) 845-7119
CERTIFICATE OF AUTHORIZATION NO. 1638

Approved | Date | Approved | Date

REAL ESTATE ACQUISITION

PARCEL PLANS

Scale 1"=100 | Drawing REA - 35 | Sheet 154

05/18/2006 12:21:43 PM S:\MDT_NORTH\mapsplanda35.dgn

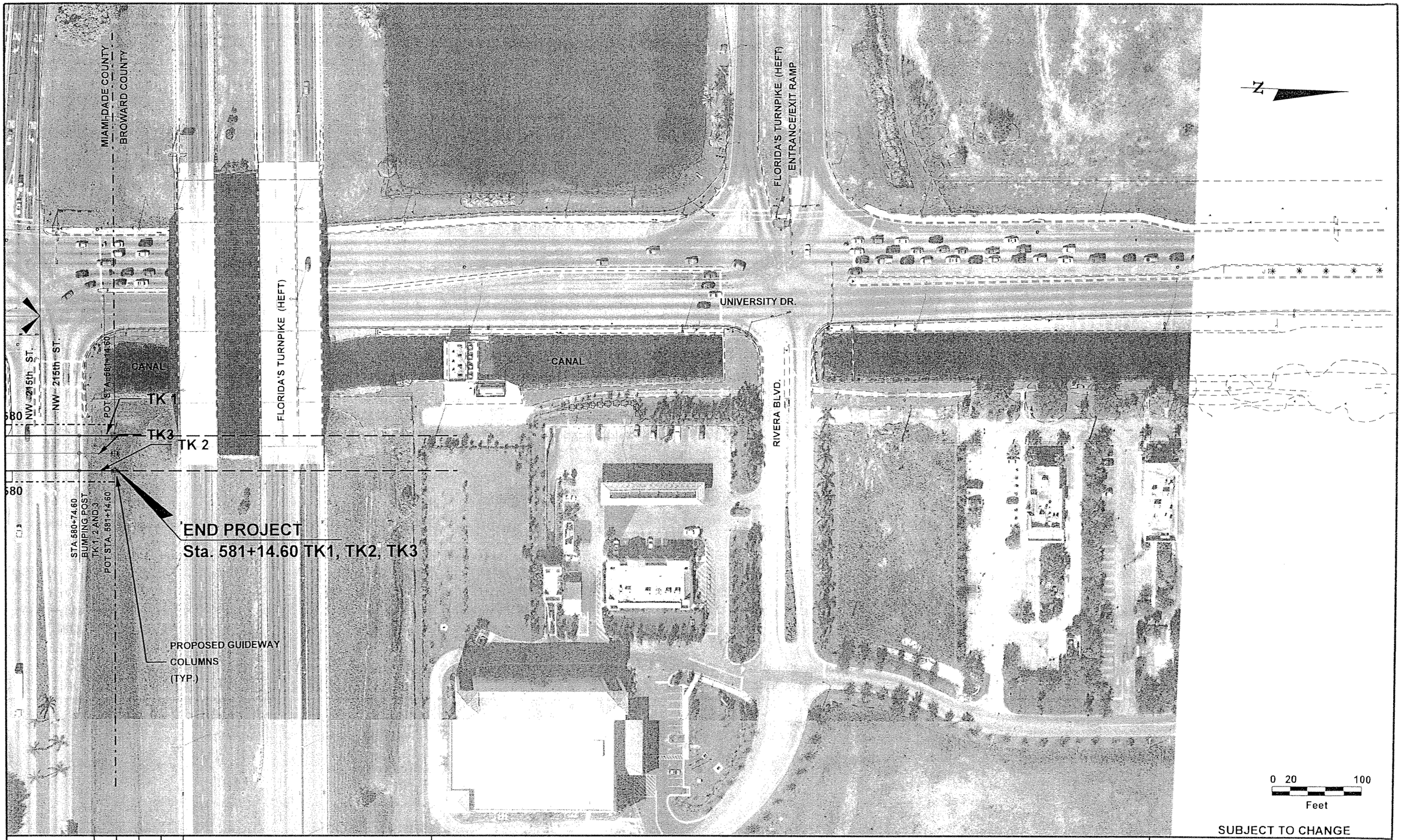

SUBJECT TO CHANGE

JE	5-06						
Designed by	Date						
KJ	5-06						
Drawn by	Date						
FB	5-06						
Checked by	Date						
Approved by	Date	No.	Date	By / Chk	App.	Revisions	

NORTH CORRIDOR METRORAIL EXTENSION - PRELIMINARY ENGINEERING (100% SUBMITTAL)

REAL ESTATE ACQUISITION

MIAMI-DADE COUNTY

MIAMI-DADE TRANSIT

PARSONS
7600 CORPORATE CENTER DRIVE, SUITE 500
MIAMI, FLORIDA 33126
PHONE: (786) 464-1000 FAX: (786) 845-7119
CERTIFICATE OF AUTHORIZATION NO. 1838

Approved	Date	Approved	Date

PARCEL PLANS

Scale	Drawing	Sheet
1"=100	REA - 36	155

05/10/2006 12:22:03 PM S:\MDT_NORTH\rwmap\rwdet836.dgn

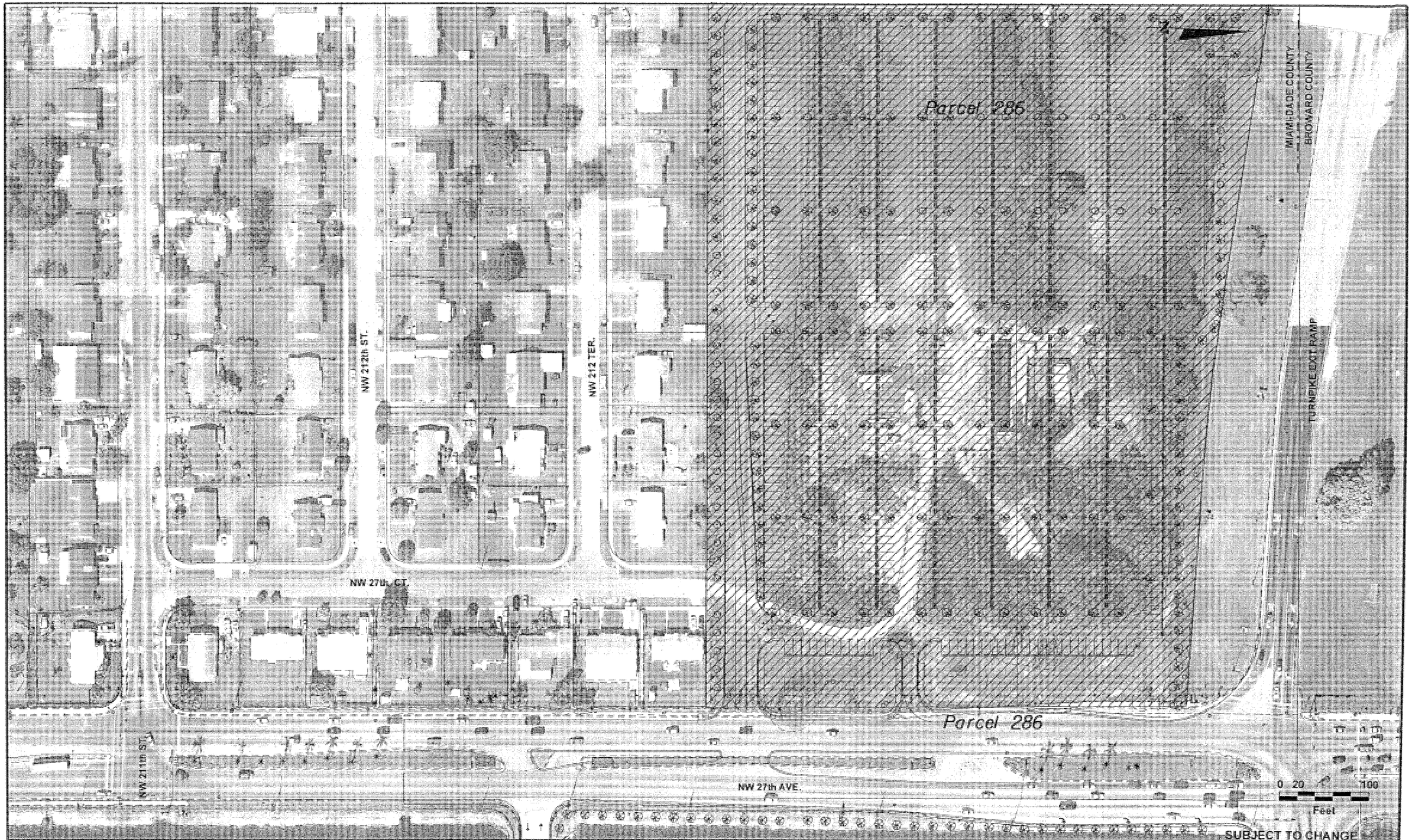

JE	5-06						
Designed by	Date						
KJ	5-06						
Drawn by	Date						
FB	5-06						
Checked by	Date						
Approved by	Date	No.	Date	By / Chk	Appr.	Revisions	

NORTH CORRIDOR METRORAIL EXTENSION - PRELIMINARY ENGINEERING (100% SUBMITTAL)

REAL ESTATE ACQUISITION

MIAMI-DADE TRANSIT

PARSONS
7800 CORPORATE CENTER DRIVE, SUITE 500
MIAMI, FLORIDA 33126
PHONE: (786) 464-1000 FAX: (786) 845-7119
CERTIFICATE OF AUTHORIZATION NO. 1838

Approved | Date

Approved | Date

PARCEL PLANS

Scale 1"=100' | Drawing REA - 37 | Sheet 15

09/19/2006 10:23:26 PM

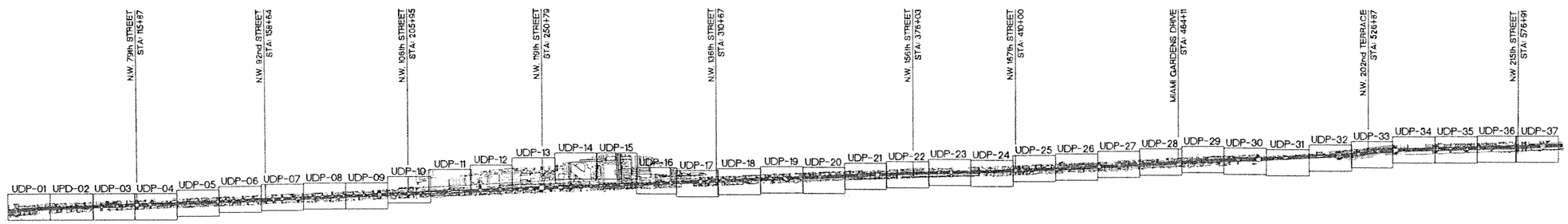

KEY MAP
SCALE: 1"=2000'

ABBREVIATIONS

ARV	AIR RELEASE VALVE	MDCC	MIAMI-DADE COMMUNITY COLLEGE
BE	BURIED ELEC.	MH	MANHOLE
BIP	BLACK IRON PIPE	MTD	MULTI-TILED DUCT
BST	BELLSOUTH TELEPHONE	NTS	NOT TO SCALE
BT	BURIED TELEPHONE CABLE OR DUCT	OH	OVERHEAD
CA	CONCRETE ASBESTOS	PVC	POLYVINYL CHLORIDE
CB	CATCH BASIN	RCP	REINFORCED CONCRETE PIPE
CEM	CEMENT DUCT	SAN	SANITARY
CI	CAST IRON	SS	STORM SEWER
COMM	COMMUNICATION	STD	SINGLE-TILE DUCT
DB	DUCT BANK	SW	SWITCH
DIP	DUCTILE IRON PIPE	TRAN	TRANSITE DUCT
ELEC	ELECTRICAL	TRANSF	TRANSFORMER
EXIST	EXISTING	UG	UNDERGROUND
FD	FRENCHDRAIN	VLV	VALVE
FH	FIRE HYDRANT	WASD	WATER & SEWER DEPARTMENT
FM	FORCE MAIN	WM	WATER MAIN
FPL	FLORIDA POWER & LIGHT		
GM	GAS MAIN		

GENERAL NOTES:

1. THESE DRAWINGS ARE NOT TO BE USED FOR UTILITY LOCATION. UTILITY LOCATIONS SHOWN ARE APPROXIMATE. UTILITIES SHOULD BE FIELD LOCATED PRIOR TO COMMENCING EXCAVATION IN THE PROJECT AREA.
2. CALL SUNSHINE STATE ONE CALL AT 1-800-432-4770 PRIOR TO ANY SUBSURFACE OPERATION IN THE PROJECT AREA.

TYPICAL SECTION AND DETAIL NUMBERING SYSTEM

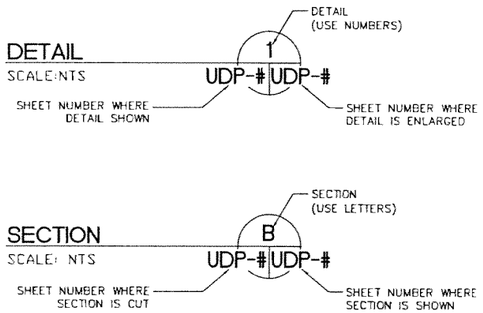

LEGEND:

EXISTING		PROPOSED
BST	BELLSOUTH TELEPHONE LINE	
ELEC	ELECTRIC LINE	
COMM	COMMUNICATION LINE	
GAS	GAS LINE	
W	WATER LINE	
ST	STORM SEWER LINE	
SAN	SANITARY SEWER LINE	
CBL	CABLE LINE	
	CONCRETE COLUMN	
	STEEL COLUMN	
	TRAFFIC SIGNAL SPAN WIRE	
	STORM AND SEWER MANHOLE	
	BELL SOUTH MANHOLE	
	CATCH BASIN	
	GATE VALVE	
	FIRE HYDRANT	
	LIGHT POLE	
	COMBINATION LIGHT POLE	
	ELECTRICAL PULL BOX	
	SAN SEWER VALVE	
	GAS VALVE	

VARIOUS	05-06					
Designed by	Date					
J.L.A./A.G.	05-06					
Drawn by	Date					
P.G./L.P./S.E.	05-06					
Checked by	Date					
S.E.	05-06	1	5/06	OA	SE	100% SUBMITTAL
Approved by	Date	No.	Date	By / Chk	App.	Revisions

NORTH CORRIDOR METRORAIL EXTENSION - PRELIMINARY ENGINEERING (100%) SUBMITTAL

UTILITY AND DRAINAGE PLANS

MIAMI-DADE COUNTY

MIAMI-DADE TRANSIT

PARSONS
7600 CORPORATE CENTER DRIVE, SUITE 500
MIAMI, FLORIDA 33126
PHONE: (786) 464-1000 FAX: (786) 845-7119
CERTIFICATE OF AUTHORIZATION NO. 1638

Approved | Date

Nova Consulting, Inc.
10486 NW 31st Terrace, Miami, Florida, 33172
Florida Certification No. 7256

Approved | Date

KEY MAP

Scale 1"=2000' | Drawing UDP-00 | Sheet 157

N

0 20 100
Feet

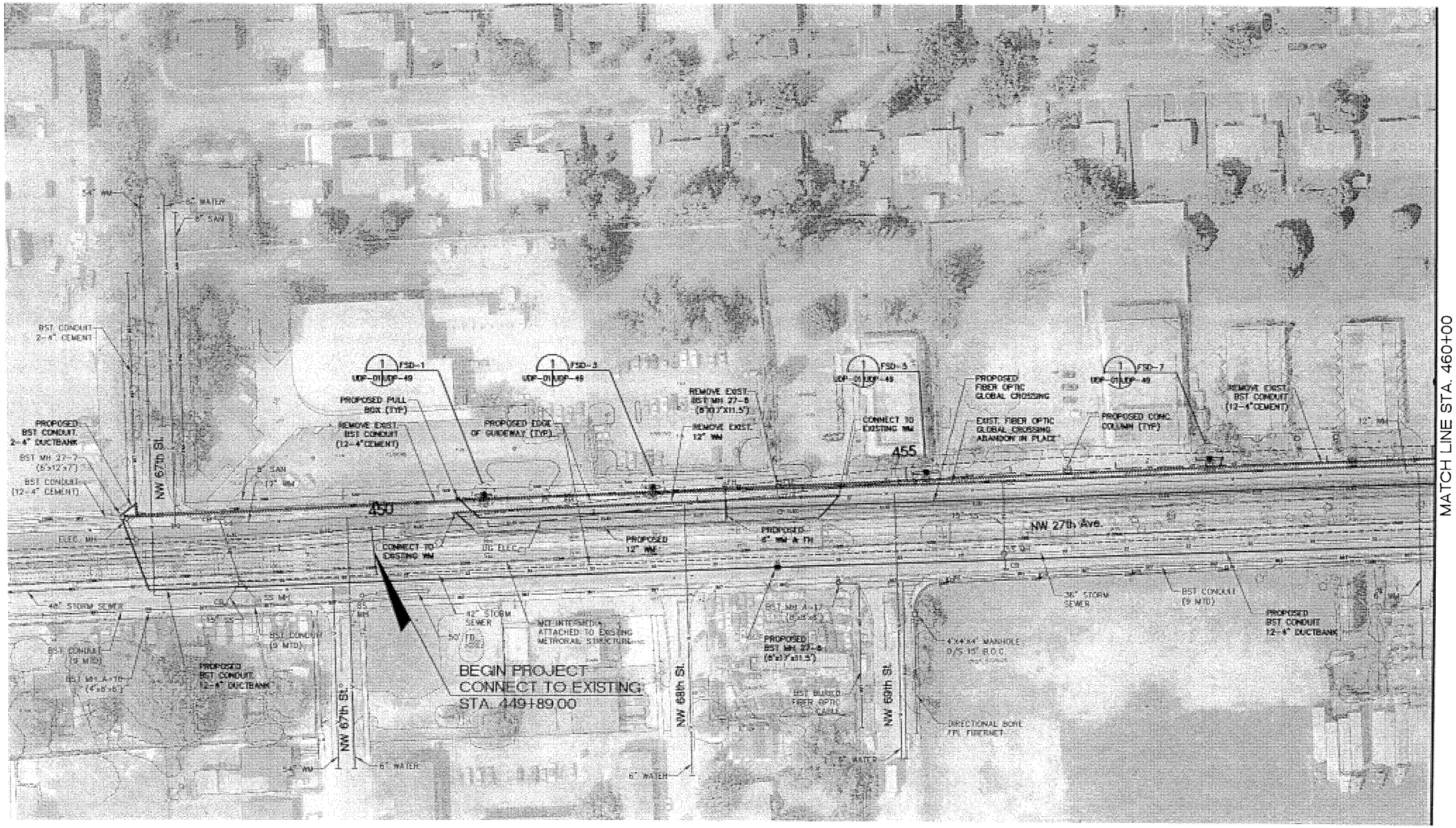

NOTE:
UTILITY LOCATIONS ARE BASED ON PRELIMINARY INFORMATION PROVIDED VIA THIRD PARTIES. LOCATIONS ARE APPROXIMATE AND NOT GUARANTEED.

VARIOUS	05-06					
Designed by	Date					
J.L.A./A.G.	05-06					
Drawn by	Date					
P.G./L.P./S.E.	05-06					
Checked by	Date					
S.E.	05-06	1	5/06	OA	SE	100% SUBMITTAL
Approved by	Date	No.	Date	By / Chk	App.	Revisions

NORTH CORRIDOR METRORAIL EXTENSION - PRELIMINARY ENGINEERING (100%) SUBMITTAL

UTILITY AND DRAINAGE PLANS

MIAMI-DADE COUNTY

MIAMI-DADE TRANSIT

PARSONS
7600 CORPORATE CENTER DRIVE, SUITE 500
MIAMI, FLORIDA 33126
PHONE: (786) 464-1000 FAX: (786) 845-7119
CERTIFICATE OF AUTHORIZATION NO. 1838

Approved | Date

Nova Consulting, Inc.
10486 NW 31st Terrace, Miami, Florida, 33172
Florida Certification No. 7256

Approved | Date

UTILITY RELOCATION AND DRAINAGE PLANS

Scale 1"=100' | Drawing UDP-01 | Sheet 158

N

0 20 100
Feet

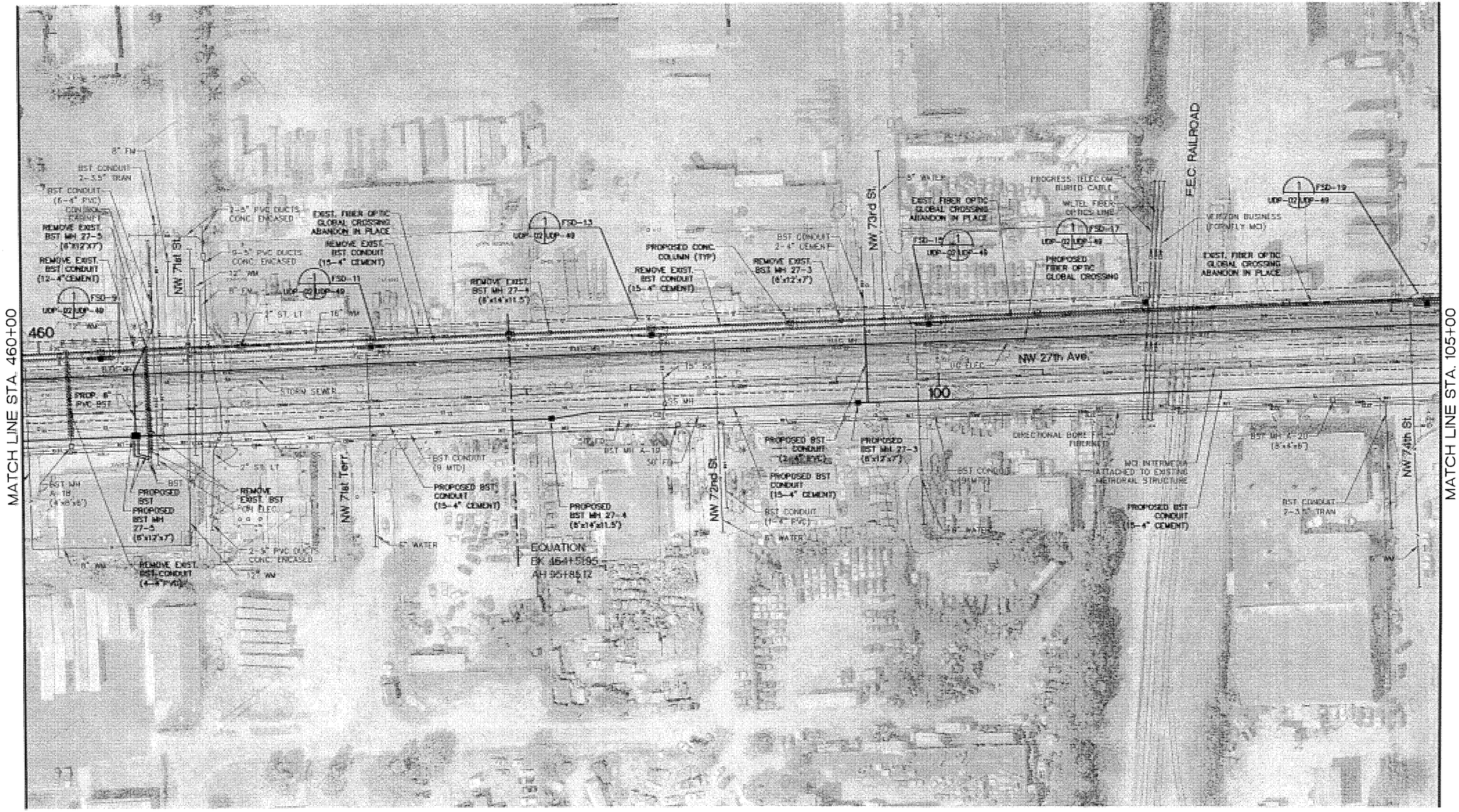

NOTE:
UTILITY LOCATIONS ARE BASED ON PRELIMINARY INFORMATION PROVIDED VIA THIRD PARTIES. LOCATIONS ARE APPROXIMATE AND NOT GUARANTEED.

VARIOUS	05-06					
Designed by	Date					
J.L.A./A.G.	05-06					
Drawn by	Date					
P.G./L.P./S.E.	05-06					
Checked by	Date					
S.E.	05-06	1	5/06	OA	SE	100% SUBMITTAL
Approved by	Date	No.	Date	By / Chk	App.	Revisions

NORTH CORRIDOR METRORAIL EXTENSION - PRELIMINARY ENGINEERING (100%) SUBMITTAL

UTILITY AND DRAINAGE PLANS

MIAMI-DADE COUNTY
MIAMI-DADE TRANSIT

PARSONS
7600 CORPORATE CENTER DRIVE, SUITE 500
MIAMI, FLORIDA 33126
PHONE: (786) 464-1000 FAX: (786) 845-7119
CERTIFICATE OF AUTHORIZATION NO. 1838

Approved Date

Nova Consulting, Inc.
10486 NW 31st Terrace, Miami, Florida, 33172
Florida Certification No. 7256

Approved Date

UTILITY RELOCATION AND DRAINAGE PLANS

Scale 1"=100' | Drawing UDP-02 | Sheet 159

N

0 20 100
Feet

MATCH LINE STA. 105+00

MATCH LINE STA. 119+00

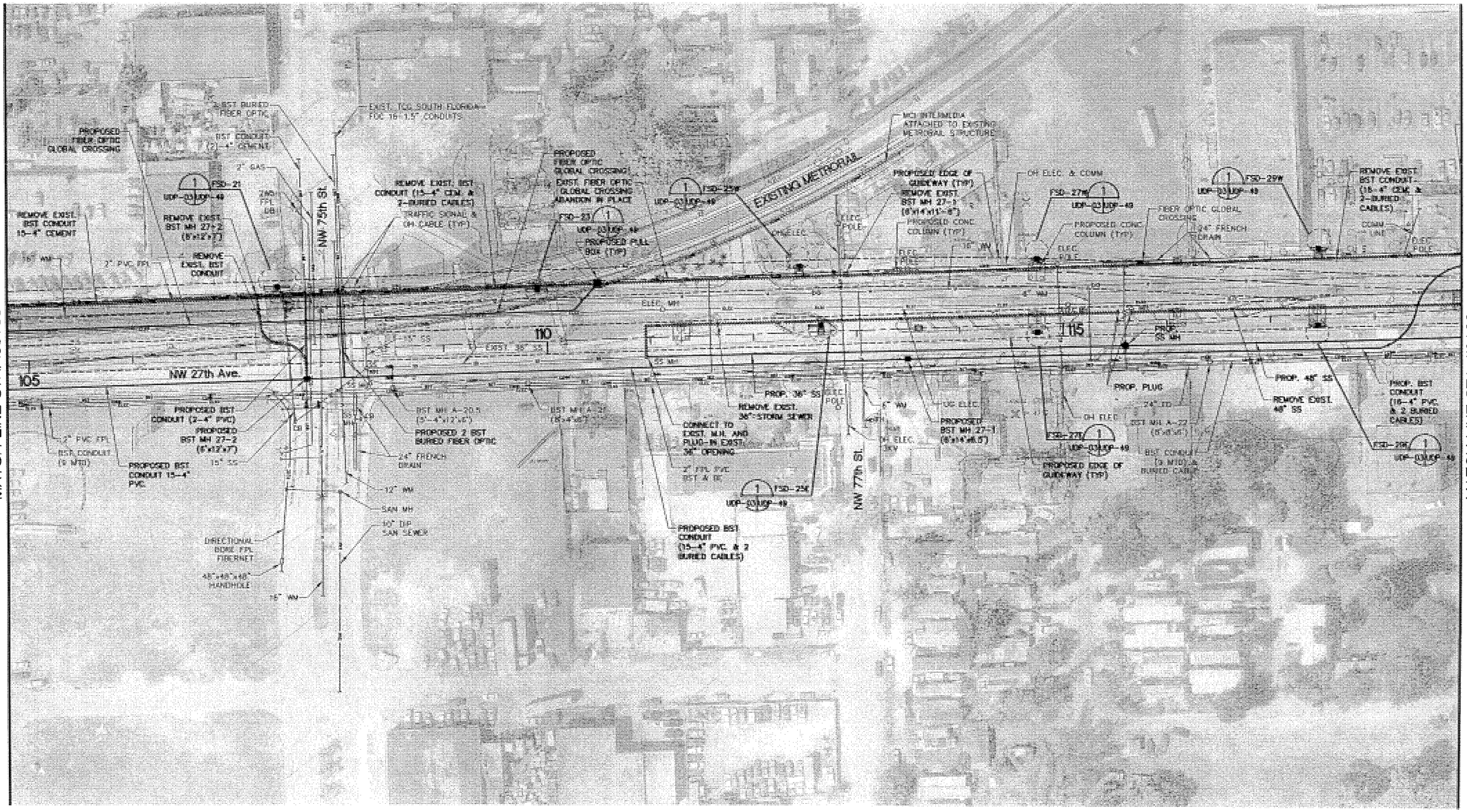

NOTE:
UTILITY LOCATIONS ARE BASED ON PRELIMINARY INFORMATION PROVIDED VIA THIRD PARTIES. LOCATIONS ARE APPROXIMATE AND NOT GUARANTEED.

VARIOUS 05-06						
Designed by Date						
J.L.A./A.G. 05-06						
Drawn by Date						
P.G./L.P./S.E. 05-06						
Checked by Date						
S.E. 05-06	1	5/06	OA	SE		100% SUBMITTAL
Approved by Date	No.	Date	By / Chk	App.		Revisions

NORTH CORRIDOR METRORAIL EXTENSION - PRELIMINARY ENGINEERING (100%) SUBMITTAL

UTILITY AND DRAINAGE PLANS

MIAMI-DADE COUNTY

MIAMI-DADE TRANSIT

PARSONS
7600 CORPORATE CENTER DRIVE, SUITE 500
MIAMI, FLORIDA 33126
PHONE: (786) 464-1000 FAX: (786) 845-7119
CERTIFICATE OF AUTHORIZATION NO. 1838

Nova Consulting, Inc.
10486 NW 31st Terrace, Miami, Florida, 33172
Florida Certification No. 7256

Approved Date

Approved Date

UTILITY RELOCATION AND DRAINAGE PLANS

Scale 1"=100' | Drawing UDP-03 | Sheet 160

N

0 20 100
Feet

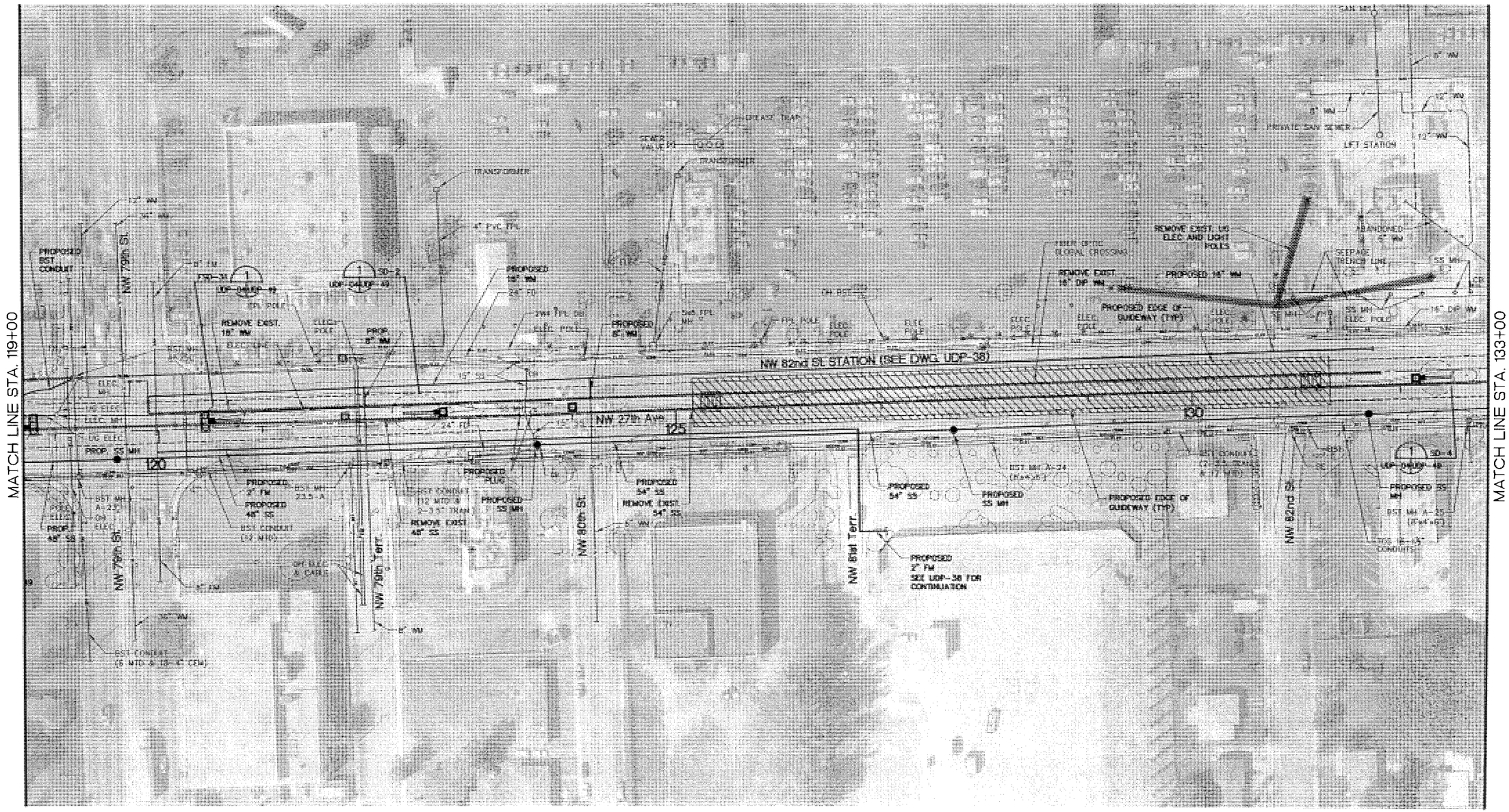

NOTE:
UTILITY LOCATIONS ARE BASED ON PRELIMINARY INFORMATION PROVIDED VIA THIRD PARTIES. LOCATIONS ARE APPROXIMATE AND NOT GUARANTEED.

VARIOUS Designed by	05-06 Date					
J.L.A./A.G. Drawn by	05-06 Date					
P.G./L.P./S.E. Checked by	05-06 Date					
S.E. Approved by	05-06 Date	1 No.	5/06 Date	OA By / Chk	SE App.	100% SUBMITTAL Revisions

NORTH CORRIDOR METRORAIL EXTENSION - PRELIMINARY ENGINEERING (100%) SUBMITTAL

UTILITY AND DRAINAGE PLANS

MIAMI-DADE COUNTY
MIAMI-DADE TRANSIT

PARSONS
7600 CORPORATE CENTER DRIVE, SUITE 500
MIAMI, FLORIDA 33126
PHONE: (786) 464-1000 FAX: (786) 845-7119
CERTIFICATE OF AUTHORIZATION NO. 1838
Approved | Date

Nova Consulting, Inc.
10486 NW 31st Terrace, Miami, Florida, 33172
Florida Certification No. 7256
Approved | Date

UTILITY RELOCATION AND DRAINAGE PLANS

Scale 1"=100' | Drawing UDP-04 | Sheet 16

N

0 20 100
Feet

MATCH LINE STA. 133+00

MATCH LINE STA. 147+00

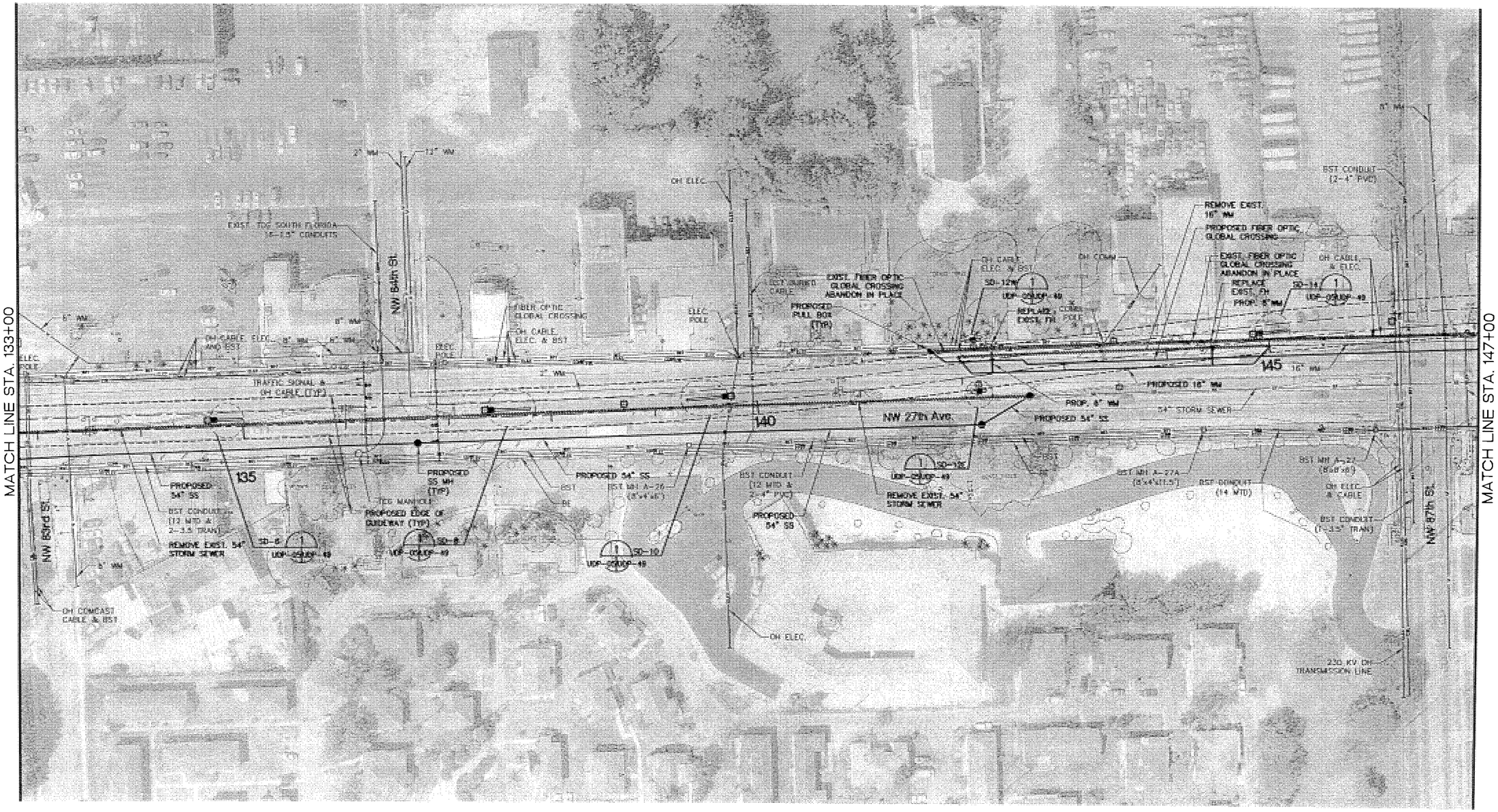

NOTE:
UTILITY LOCATIONS ARE BASED ON PRELIMINARY INFORMATION PROVIDED VIA THIRD PARTIES. LOCATIONS ARE APPROXIMATE AND NOT GUARANTEED.

VARIOUS	05-06					
Designed by	Date					
J.L.A./A.G.	05-06					
Drawn by	Date					
P.G./L.P./S.E.	05-06					
Checked by	Date					
S.E.	05-06	1	5/06	0A	SE	100% SUBMITTAL
Approved by	Date	No.	Date	By / Chk	App.	Revisions

NORTH CORRIDOR METRORAIL EXTENSION - PRELIMINARY ENGINEERING (100%) SUBMITTAL

UTILITY AND DRAINAGE PLANS

MIAMI-DADE COUNTY

MIAMI-DADE TRANSIT

PARSONS
7600 CORPORATE CENTER DRIVE, SUITE 500
MIAMI, FLORIDA 33126
PHONE: (786) 464-1000 FAX: (786) 845-7119
CERTIFICATE OF AUTHORIZATION NO. 1838

Approved | Date

Nova Consulting, Inc.
10486 NW 31st Terrace, Miami, Florida, 33172
Florida Certification No. 7256

Approved | Date

UTILITY RELOCATION AND DRAINAGE PLANS

Scale 1"=100' | Drawing UDP-05 | Sheet 162

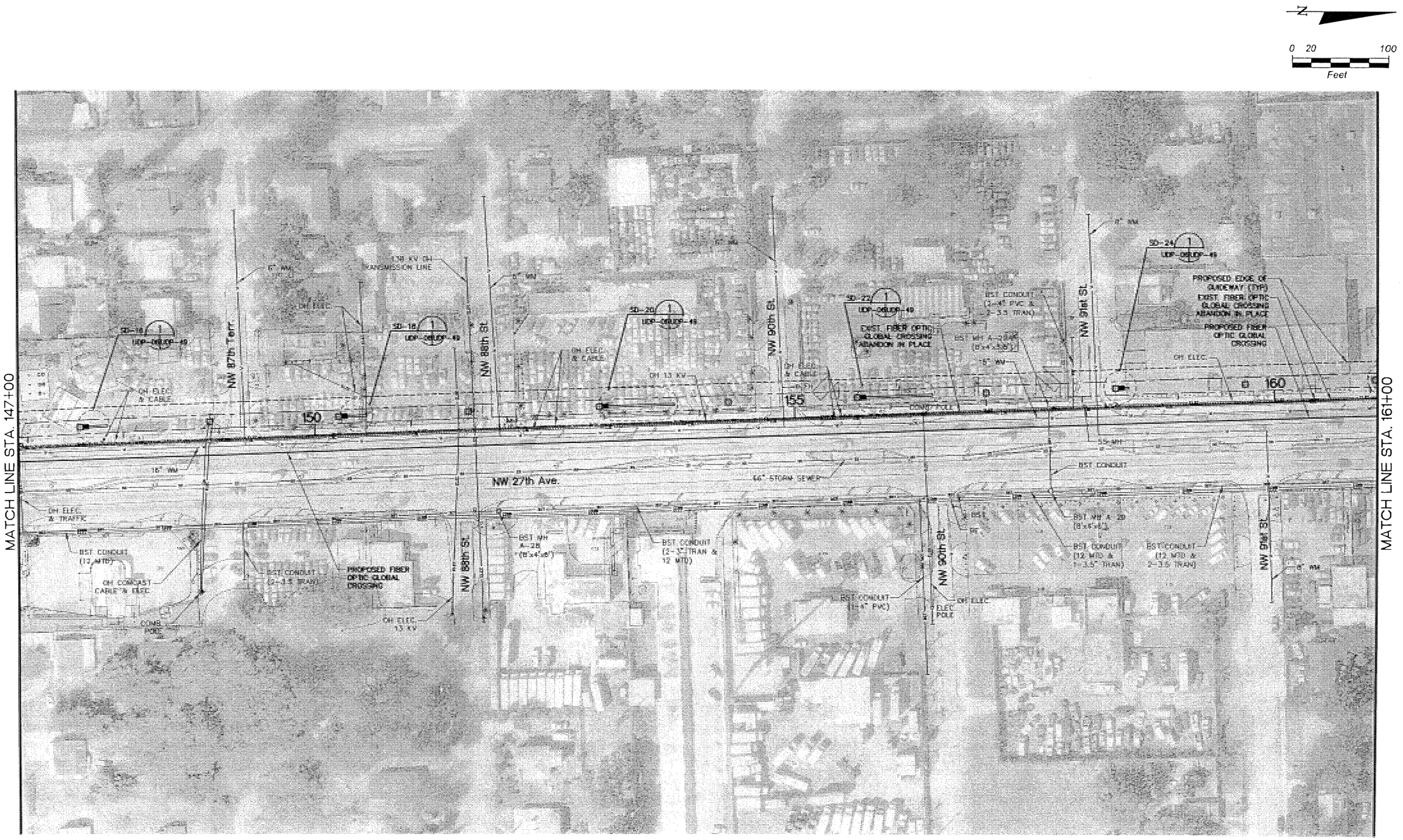

NOTE:
UTILITY LOCATIONS ARE BASED ON PRELIMINARY INFORMATION PROVIDED VIA THIRD PARTIES. LOCATIONS ARE APPROXIMATE AND NOT GUARANTEED.

VARIOUS	05-06					
Designed by	Date					
J.L.A./A.G.	05-06					
Drawn by	Date					
P.G./L.P./S.E.	05-06					
Checked by	Date					
S.E.	05-06	1	5/06	OA	SE	100% SUBMITTAL
Approved by	Date	No.	Date	By/Chk	App.	Revisions

NORTH CORRIDOR METRORAIL EXTENSION - PRELIMINARY ENGINEERING (100%) SUBMITTAL

MIAMI-DADE COUNTY

MIAMI-DADE TRANSIT

PARSONS
7600 CORPORATE CENTER DRIVE, SUITE 500
MIAMI, FLORIDA 33126
PHONE: (786) 464-1000 FAX: (786) 845-7119
CERTIFICATE OF AUTHORIZATION NO. 1838

Approved | Date

Nova Consulting, Inc.
10486 NW 31st Terrace, Miami, Florida, 33172
Florida Certification No. 7256

Approved | Date

UTILITY AND DRAINAGE PLANS

UTILITY RELOCATION AND DRAINAGE PLANS

Scale 1"=100' | Drawing UDP-06 | Sheet 163

N

0 20 100
Feet

MATCH LINE STA. 161+00

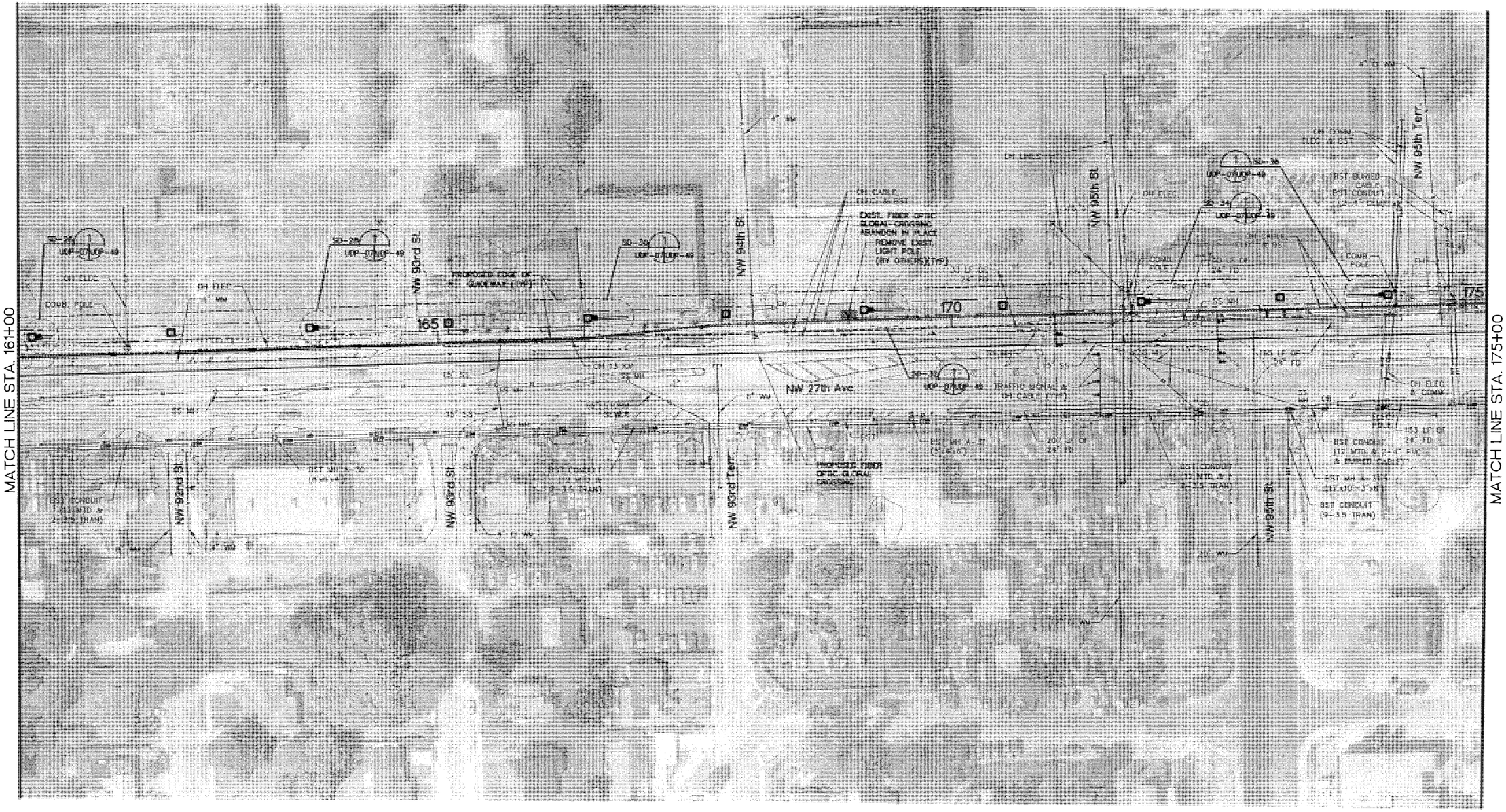

MATCH LINE STA. 175+00

NOTE:
UTILITY LOCATIONS ARE BASED ON PRELIMINARY INFORMATION PROVIDED VIA THIRD PARTIES. LOCATIONS ARE APPROXIMATE AND NOT GUARANTEED.

VARIOUS	05-06					
Designed by	Date					
J.L.A./A.G.	05-06					
Drawn by	Date					
P.G./L.P./S.E.	05-06					
Checked by	Date					
S.E.	05-06	1	5/06	OA	SE	100% SUBMITTAL
Approved by	Date	No.	Date	By / Chk	App.	Revisions

NORTH CORRIDOR METRORAIL EXTENSION - PRELIMINARY ENGINEERING (100%) SUBMITTAL

MIAMI-DADE COUNTY
MIAMI-DADE TRANSIT

PARSONS
7600 CORPORATE CENTER DRIVE, SUITE 500
MIAMI, FLORIDA 33126
PHONE: (786) 464-1000 FAX: (786) 845-7119
CERTIFICATE OF AUTHORIZATION NO. 1838
Approved | Date

Nova Consulting, Inc.
10486 NW 31st Terrace, Miami, Florida, 33172
Florida Certification No. 7256
Approved | Date

UTILITY AND DRAINAGE PLANS

UTILITY RELOCATION AND DRAINAGE PLANS

Scale 1"=100' | Drawing UDP-07 | Sheet 164

N

0 20 100
Feet

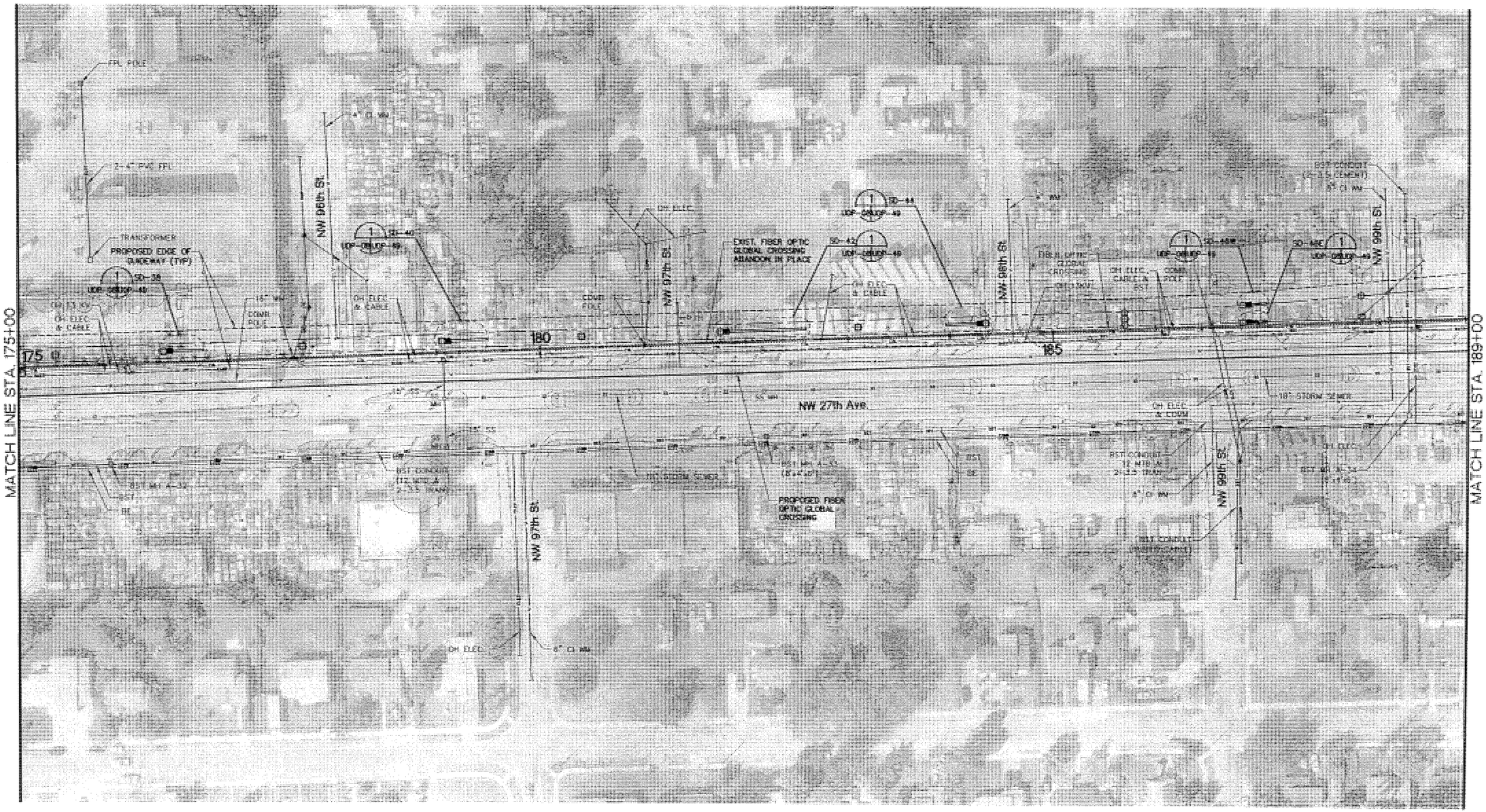

NOTE:
UTILITY LOCATIONS ARE BASED ON PRELIMINARY INFORMATION PROVIDED VIA THIRD PARTIES. LOCATIONS ARE APPROXIMATE AND NOT GUARANTEED.

VARIOUS	05-06					
Designed by	Date					
J.L.A./A.G.	05-06					
Drawn by	Date					
P.G./L.P./S.E.	05-06					
Checked by	Date					
S.E.	05-06					
Approved by	Date	1	5/06	OA	SE	100% SUBMITTAL
		No.	Date	By / Chk	App.	Revisions

NORTH CORRIDOR METRORAIL EXTENSION - PRELIMINARY ENGINEERING (100%) SUBMITTAL

MIAMI-DADE COUNTY
MIAMI-DADE TRANSIT

PARSONS
7600 CORPORATE CENTER DRIVE, SUITE 500
MIAMI, FLORIDA 33126
PHONE: (786) 464-1000 FAX: (786) 845-7119
CERTIFICATE OF AUTHORIZATION NO. 1838
Approved | Date

Nova Consulting, Inc.
10486 NW 31st Terrace, Miami, Florida, 33172
Florida Certification No. 7256
Approved | Date

UTILITY AND DRAINAGE PLANS

UTILITY RELOCATION AND DRAINAGE PLANS

Scale 1"=100' | Drawing UDP-08 | Sheet 165

N

0 20 100
Feet

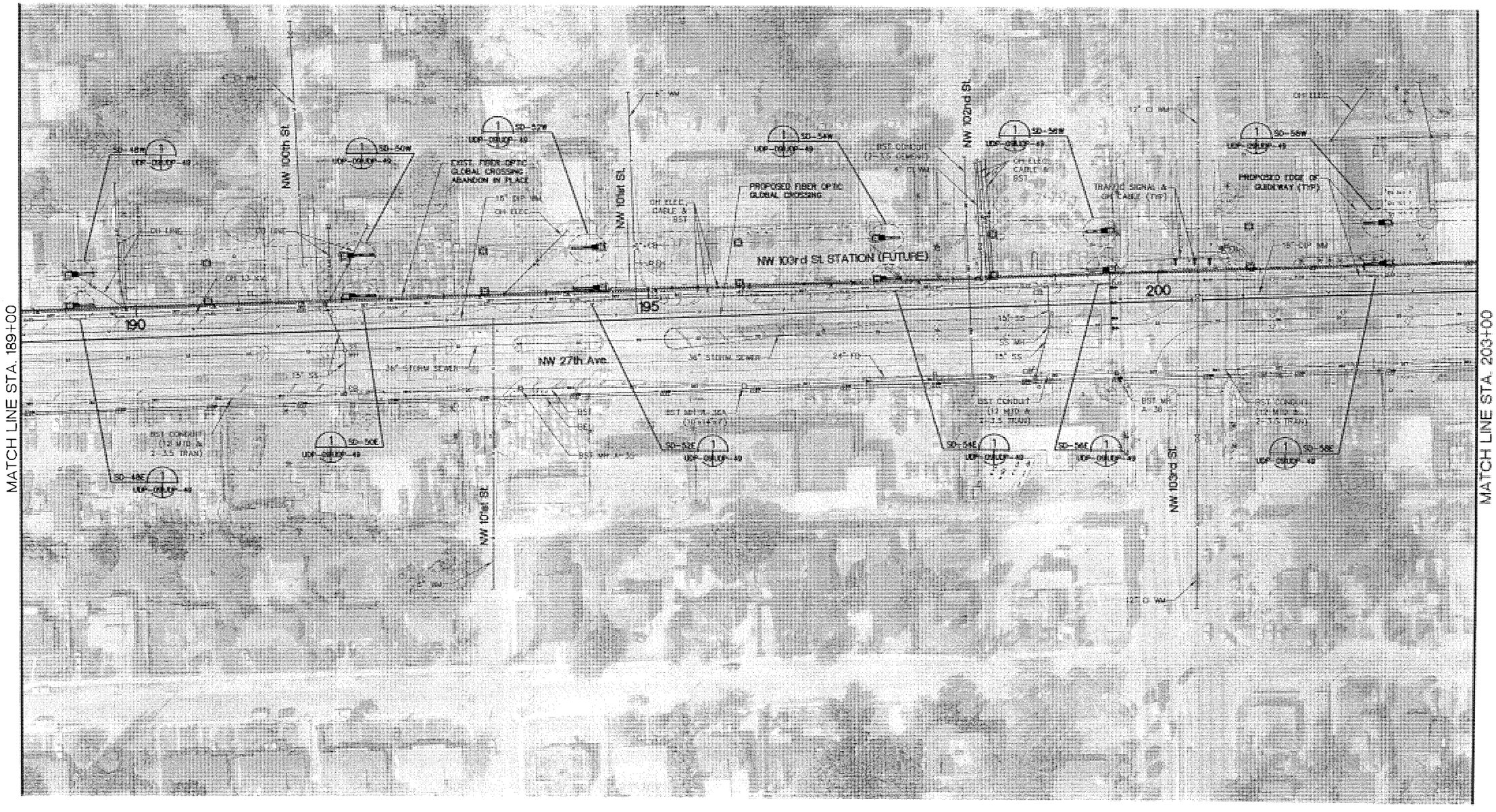

NOTE:
UTILITY LOCATIONS ARE BASED ON PRELIMINARY INFORMATION PROVIDED VIA THIRD PARTIES. LOCATIONS ARE APPROXIMATE AND NOT GUARANTEED.

VARIOUS	05-06					
Designed by	Date					
J.L.A./A.G.	05-06					
Drawn by	Date					
P.G./L.P./S.E.	05-06					
Checked by	Date					
S.E.	05-06	1	5/06	OA	SE	100% SUBMITTAL
Approved by	Date	No.	Date	By / Chk	App.	Revisions

NORTH CORRIDOR METRORAIL EXTENSION - PRELIMINARY ENGINEERING (100%) SUBMITTAL

UTILITY AND DRAINAGE PLANS

MIAMI-DADE COUNTY

MIAMI-DADE TRANSIT

PARSONS
7600 CORPORATE CENTER DRIVE, SUITE 500
MIAMI, FLORIDA 33126
PHONE: (786) 464-1000 FAX: (786) 845-7119
CERTIFICATE OF AUTHORIZATION NO. 1636

Approved | Date

Nova Consulting, Inc.
10486 NW 31st Terrace, Miami, Florida, 33172
Florida Certification No. 7256

Approved | Date

UTILITY RELOCATION AND DRAINAGE PLANS

Scale 1"=100' | Drawing UDP-09 | Sheet 16

NOTE:
UTILITY LOCATIONS ARE BASED ON PRELIMINARY INFORMATION PROVIDED VIA THIRD PARTIES. LOCATIONS ARE APPROXIMATE AND NOT GUARANTEED.

VARIOUS	05-06					
Designed by	Date					
J.L.A./A.G.	05-06					
Drawn by	Date					
P.G./L.P./S.E.	05-06					
Checked by	Date					
S.E.	05-06	1	5/06	OA	SE	100% SUBMITTAL
Approved by	Date	No.	Date	By / Chk	App.	Revisions

NORTH CORRIDOR METRORAIL EXTENSION - PRELIMINARY ENGINEERING (100%) SUBMITTAL

MIAMI-DADE COUNTY

MIAMI-DADE TRANSIT

PARSONS
7600 CORPORATE CENTER DRIVE, SUITE 500
MIAMI, FLORIDA 33126
PHONE: (786) 464-1000 FAX: (786) 845-7119
CERTIFICATE OF AUTHORIZATION NO. 1838

Approved | Date

Nova Consulting, Inc.
10486 NW 31st Terrace, Miami, Florida, 33172
Florida Certification No. 7256

Approved | Date

UTILITY AND DRAINAGE PLANS

UTILITY RELOCATION AND DRAINAGE PLANS

Scale 1"=100' | Drawing UDP-10 | Sheet 167

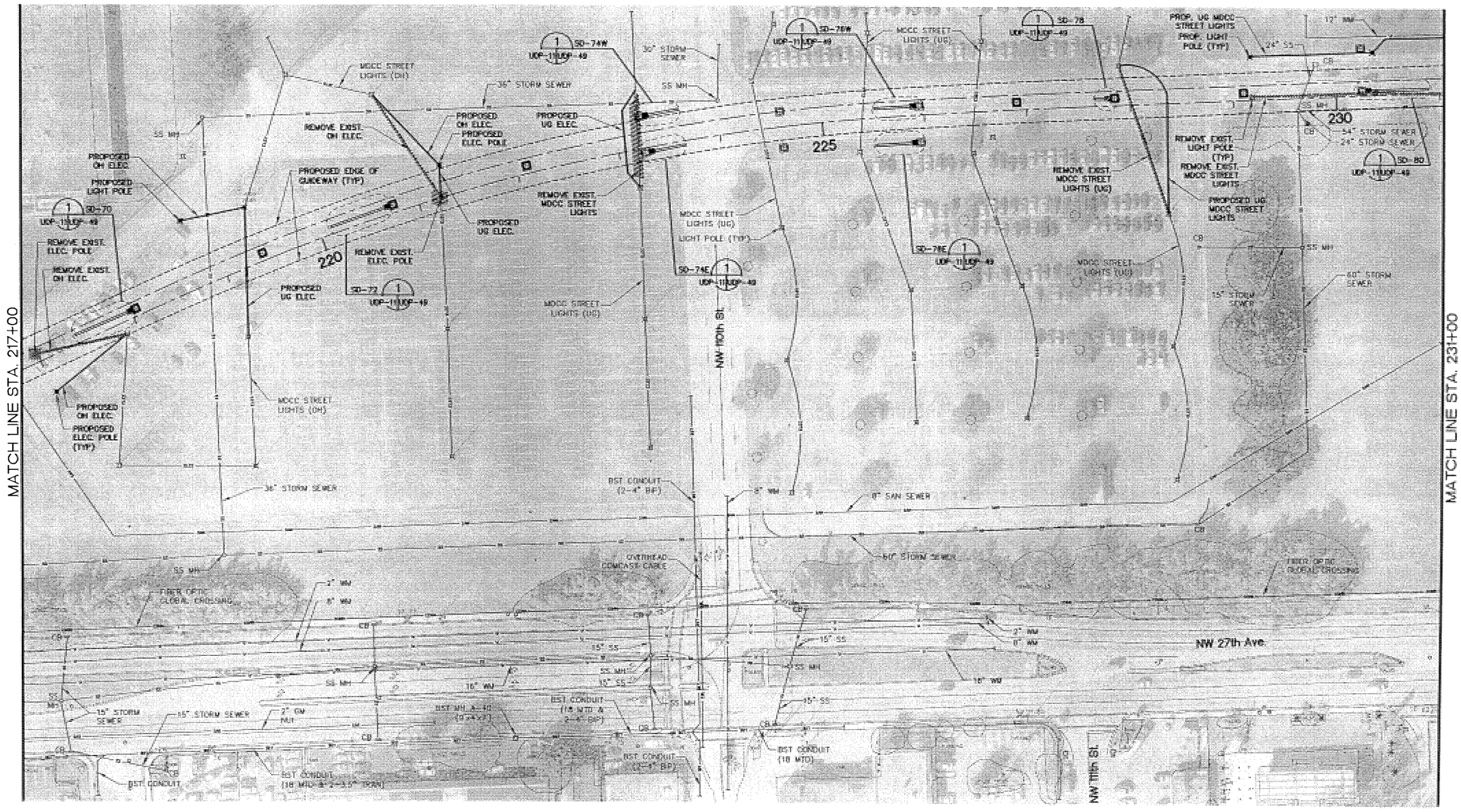

NOTE:
UTILITY LOCATIONS ARE BASED ON PRELIMINARY INFORMATION PROVIDED VIA THIRD PARTIES. LOCATIONS ARE APPROXIMATE AND NOT GUARANTEED.

VARIOUS	05-06					
Designed by	Date					
J.L.A./A.G.	05-06					
Drawn by	Date					
P.G./L.P./S.E.	05-06					
Checked by	Date					
S.E.	05-06	1	5/06	OA	SE	100% SUBMITTAL
Approved by	Date	No.	Date	By / Chk	App.	Revisions

NORTH CORRIDOR METRORAIL EXTENSION - PRELIMINARY ENGINEERING (100%) SUBMITTAL

MIAMI-DADE COUNTY
MIAMI-DADE TRANSIT

PARSONS
7600 CORPORATE CENTER DRIVE, SUITE 500
MIAMI, FLORIDA 33126
PHONE: (786) 464-1000 FAX: (786) 845-7119
CERTIFICATE OF AUTHORIZATION NO. 1838
Approved | Date

Nova Consulting, Inc.
10486 NW 31st Terrace, Miami, Florida, 33172
Florida Certification No. 7256
Approved | Date

UTILITY AND DRAINAGE PLANS

UTILITY RELOCATION AND DRAINAGE PLANS

Scale 1"=100' | Drawing UDP-11 | Sheet 168

N

0 20 100
Feet

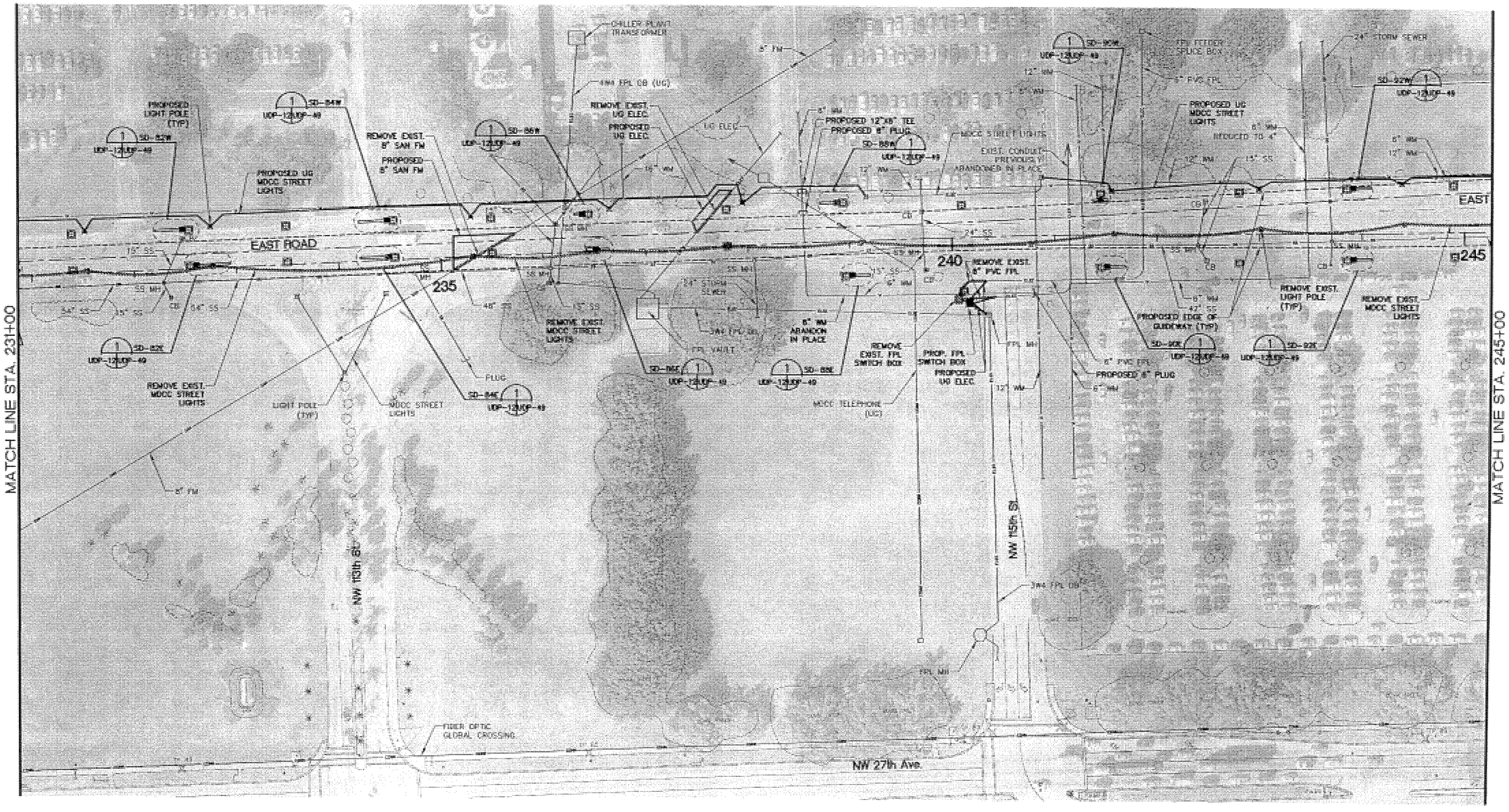

NOTE:
UTILITY LOCATIONS ARE BASED ON PRELIMINARY INFORMATION PROVIDED VIA THIRD PARTIES. LOCATIONS ARE APPROXIMATE AND NOT GUARANTEED.

VARIOUS	05-06					
Designed by	Date					
J.L.A./A.G.	05-06					
Drawn by	Date					
P.G./L.P./S.E.	05-06					
Checked by	Date					
S.E.	05-06	1	5/06	OA	SE	100% SUBMITTAL
Approved by	Date	No.	Date	By / Chk	App.	Revisions

NORTH CORRIDOR METRORAIL EXTENSION - PRELIMINARY ENGINEERING (100%) SUBMITTAL

MIAMI-DADE COUNTY
MIAMI-DADE TRANSIT

PARSONS
7500 CORPORATE CENTER DRIVE, SUITE 500
MIAMI, FLORIDA 33126
PHONE: (786) 464-1000 FAX: (786) 845-7119
CERTIFICATE OF AUTHORIZATION NO. 1838
Approved | Date

Nova Consulting, Inc.
10486 NW 31st Terrace, Miami, Florida, 33172
Florida Certification No. 7256
Approved | Date

UTILITY AND DRAINAGE PLANS

UTILITY RELOCATION AND DRAINAGE PLANS

Scale 1"=100' | Drawing UDP-12 | Sheet 169

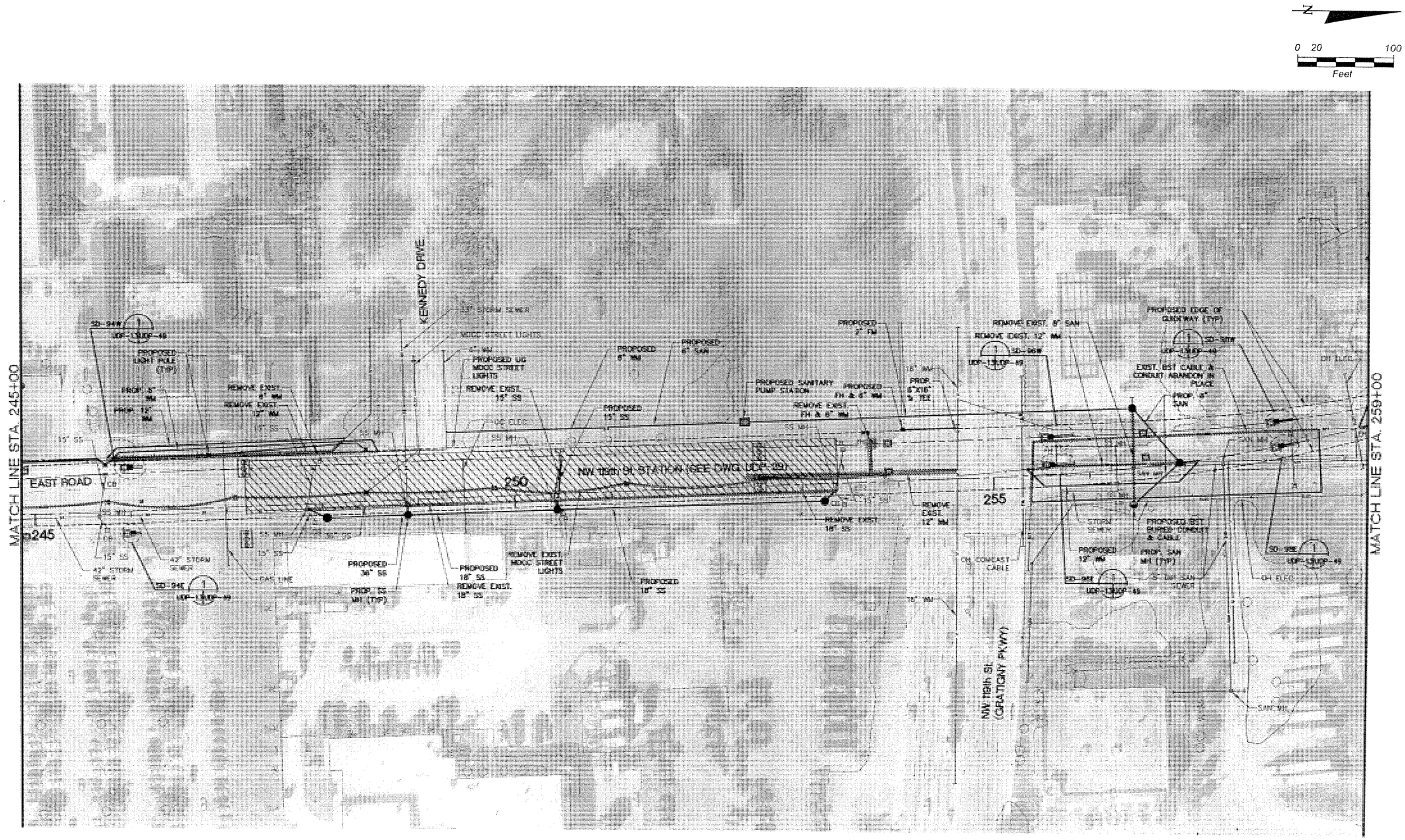

NOTE:
UTILITY LOCATIONS ARE BASED ON PRELIMINARY INFORMATION PROVIDED VIA THIRD PARTIES. LOCATIONS ARE APPROXIMATE AND NOT GUARANTEED.

VARIOUS	05-06					
Designed by	Date					
J.L.A./A.G.	05-06					
Drawn by	Date					
P.G./L.P./S.E.	05-06					
Checked by	Date					
S.E.	05-06	1	5/06	OA	SE	100% SUBMITTAL
Approved by	Date	No.	Date	By / Chk	App.	Revisions

NORTH CORRIDOR METRORAIL EXTENSION - PRELIMINARY ENGINEERING (100%) SUBMITTAL

MIAMI-DADE COUNTY

MIAMI-DADE TRANSIT

PARSONS
7600 CORPORATE CENTER DRIVE, SUITE 500
MIAMI, FLORIDA 33126
PHONE: (786) 464-1000 FAX: (786) 845-7119
CERTIFICATE OF AUTHORIZATION NO. 1838

Approved | Date

Nova Consulting, Inc.
10486 NW 31st Terrace, Miami, Florida, 33172
Florida Certification No. 7256

Approved | Date

UTILITY AND DRAINAGE PLANS

UTILITY RELOCATION AND DRAINAGE PLANS

Scale 1"=100' | Drawing UDP-13 | Sheet 170

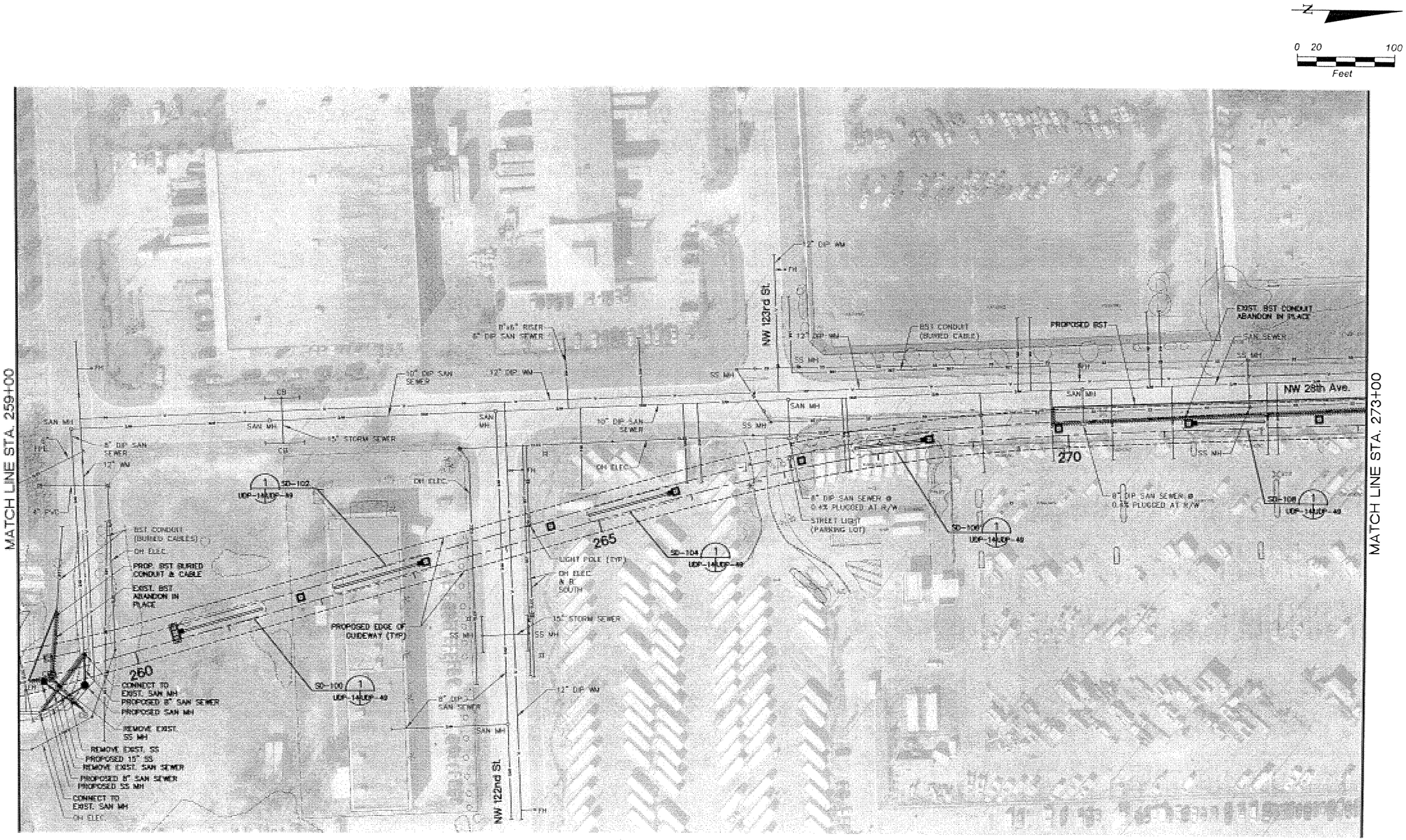

NOTE:
UTILITY LOCATIONS ARE BASED ON PRELIMINARY INFORMATION PROVIDED VIA THIRD PARTIES. LOCATIONS ARE APPROXIMATE AND NOT GUARANTEED.

VARIOUS	05-06					
Designed by	Date					
J.L.A./A.G.	05-06					
Drawn by	Date					
P.G./L.P./S.E.	05-06					
Checked by	Date					
S.E.	05-06	1	5/06	OA	SE	100% SUBMITTAL
Approved by	Date	No.	Date	By / Chk	App.	Revisions

NORTH CORRIDOR METRORAIL EXTENSION - PRELIMINARY ENGINEERING (100%) SUBMITTAL

MIAMI-DADE COUNTY

MIAMI-DADE TRANSIT

PARSONS
7600 CORPORATE CENTER DRIVE, SUITE 500
MIAMI, FLORIDA 33126
PHONE: (786) 464-1000 FAX: (786) 845-7119
CERTIFICATE OF AUTHORIZATION NO. 1838

Approved | Date

Nova Consulting, Inc.
10486 NW 31st Terrace, Miami, Florida, 33172
Florida Certification No. 7256

Approved | Date

UTILITY AND DRAINAGE PLANS

UTILITY RELOCATION AND DRAINAGE PLANS

Scale 1"=100' | Drawing UDP-14 | Sheet 171

N

0 20 100
Feet

MATCH LINE STA. 273+00

MATCH LINE STA. 287+00

NW 125th St.

NW 28th Ave.

8" PVC SAN SEWER

12" DIP NW

SAN SEWER

STORM SEWER

PROPOSED SS

PROPOSED SS MH

SAN MH

12" RW

REMOVE EXIST. WATER LINE

EXIST. BST CONDUIT ABANDON IN PLACE

PROPOSED BST

BST CONDUIT (BURIED CABLE)

OH ELEC

275

280

285

REMOVE EXIST. BST CONDUIT (BURIED CABLE)

STORM SEWER

REMOVE EXIST. STORM SEWER

REMOVE EXIST. SS MH

PROPOSED 12" RW

8" PVC SAN SEWER

PROPOSED EDGE OF GUIDEWAY (TYP)

SD-110

SD-112

SD-114

SD-116

UDP-15/UDP-49

CANAL

OH ELEC & BST

NW 127th St

NOTE:
UTILITY LOCATIONS ARE BASED ON PRELIMINARY INFORMATION PROVIDED VIA THIRD PARTIES. LOCATIONS ARE APPROXIMATE AND NOT GUARANTEED.

VARIOUS	05-06					
Designed by	Date					
J.L.A./A.G.	05-06					
Drawn by	Date					
P.G./L.P./S.E.	05-06					
Checked by	Date					
S.E.	05-06	1	5/06	OA	SE	100% SUBMITTAL
Approved by	Date	No.	Date	By / Chk	App.	Revisions

NORTH CORRIDOR METRORAIL EXTENSION - PRELIMINARY ENGINEERING (100%) SUBMITTAL

UTILITY AND DRAINAGE PLANS

MIAMI-DADE COUNTY

MIAMI-DADE TRANSIT

PARSONS
7500 CORPORATE CENTER DRIVE, SUITE 500
MIAMI, FLORIDA 33126
PHONE: (786) 464-1000 FAX: (786) 845-7119
CERTIFICATE OF AUTHORIZATION NO. 1638

Approved | Date

Nova Consulting, Inc.
10486 NW 31st Terrace, Miami, Florida, 33172
Florida Certification No. 7256

Approved | Date

UTILITY RELOCATION AND DRAINAGE PLANS

Scale 1"=100' | Drawing UDP-15 | Sheet 17

N

0 20 100
Feet

MATCH LINE STA. 287+00

MATCH LINE STA. 301+00

SD-120 1 UDP-16\UDP-49

SD-122 1 UDP-16\UDP-49

SD-124 1 UDP-16\UDP-49

SD-126E 1 UDP-16\UDP-49

SD-126W 1 UDP-16\UDP-49

SD-128 1 UDP-16\UDP-49

SD-130 1 UDP-16\UDP-49

PROPOSED EDGE OF GUIDEWAY (TYP)

280

295

300

NW 27th Ave.

NW 132nd St.

NW 136th St.

PROP. FIBER OPTIC GLOBAL CROSSING

EXIST. FIBER OPTIC GLOBAL CROSSING ABANDON IN PLACE

PROPOSED PULL BOX (TYP)

CONNECT TO EXIST. ELEC. POLE (TYP)

FIBER OPTIC GLOBAL CROSSING

LIGHT POLE

OH ELEC

REMOVE EXIST. OH ELEC

PROP. UG ELEC.

18" STORM SEWER

BST CONDUIT (6-4" PVC)

PROP. SS MH (TYP)

OPA LOCKA 6" CA. WM

CITY OF NORTH MIAMI WATER

REMOVE EXIST. STORM SEWER

ELEC. CABLE & BSOUTH

PROPOSED 18" SS

FIBER OPTIC GLOBAL CROSSING

POLE (TYP)

8" CA. WATER OPA-LOCKA

BST CONDUIT (12 MTD)

BST MH A-SS.5 N (8'x12'x7')

PROPOSED BST CONDUIT & CABLE

REMOVE EXIST BST CONDUIT & CABLE

BST MH A-SS (9'x8'x7')

BST MH A-SS.5 (8'x14'x11.5')

BST CONDUIT (26 MTD)

CITY OF NI MIAMI WATER

CITY OF NI MIAMI WATER

NOTE:
UTILITY LOCATIONS ARE BASED ON PRELIMINARY INFORMATION PROVIDED VIA THIRD PARTIES. LOCATIONS ARE APPROXIMATE AND NOT GUARANTEED.

VARIOUS	05-06					
Designed by	Date					
J.L.A./A.G.	05-06					
Drawn by	Date					
P.G./L.P./S.E.	05-06					
Checked by	Date					
S.E.	05-06	1	5/06	OA	SE	100% SUBMITTAL
Approved by	Date	No.	Date	By / Chk	App.	Revisions

NORTH CORRIDOR METRORAIL EXTENSION - PRELIMINARY ENGINEERING (100%) SUBMITTAL

MIAMI-DADE COUNTY

MIAMI-DADE TRANSIT

PARSONS
7600 CORPORATE CENTER DRIVE, SUITE 500
MIAMI, FLORIDA 33126
PHONE: (786) 464-1000 FAX: (786) 845-7119
CERTIFICATE OF AUTHORIZATION NO. 1838

Approved | Date

Nova Consulting, Inc.
10486 NW 31st Terrace, Miami, Florida, 33172
Florida Certification No. 7256

Approved | Date

UTILITY AND DRAINAGE PLANS

UTILITY RELOCATION AND DRAINAGE PLANS

Scale 1"=100' | Drawing UDP-16 | Sheet 173

N

0 20 100
Feet

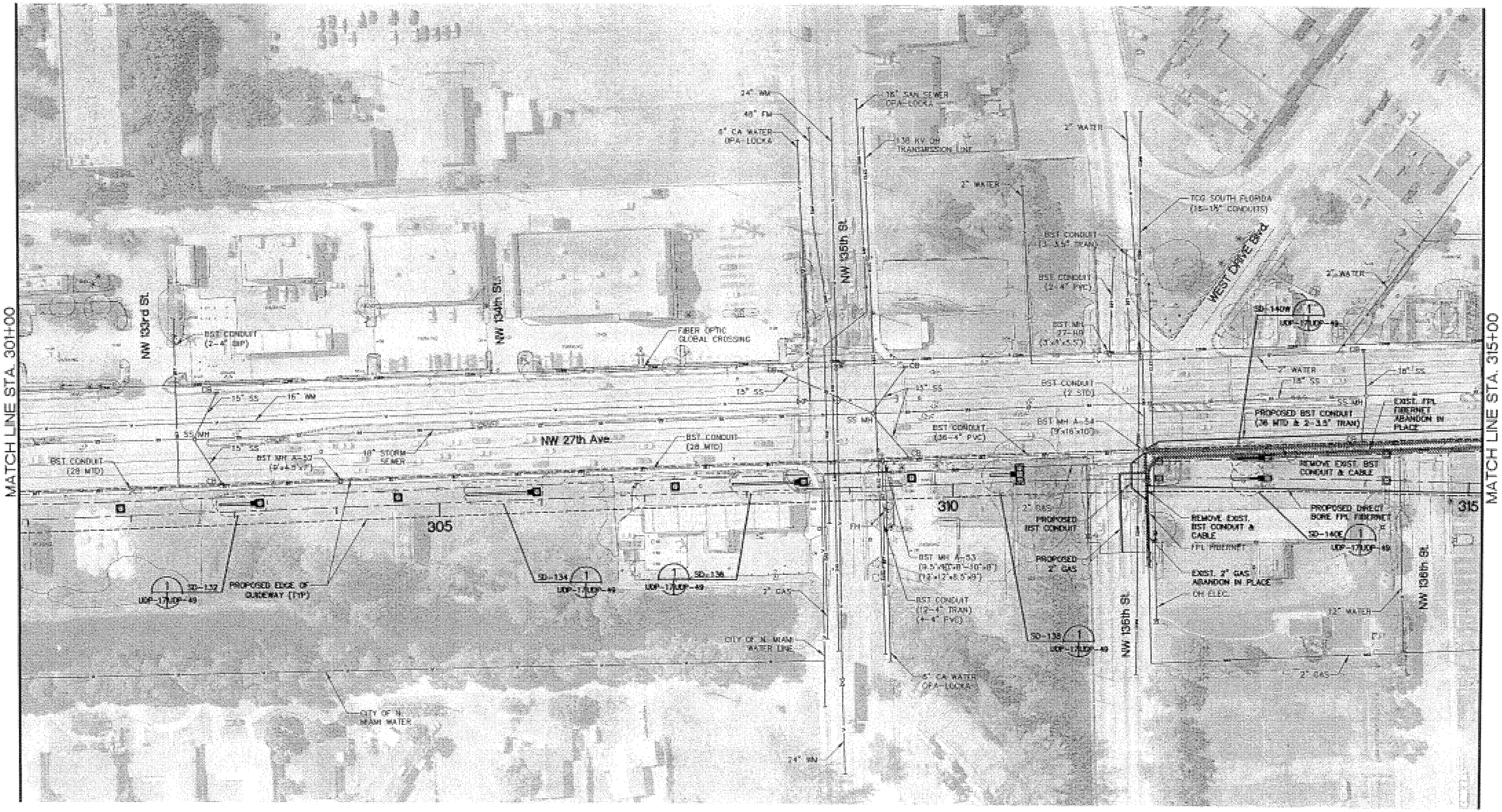

NOTE:
UTILITY LOCATIONS ARE BASED ON PRELIMINARY INFORMATION PROVIDED VIA THIRD PARTIES. LOCATIONS ARE APPROXIMATE AND NOT GUARANTEED.

VARIOUS	05-06					
Designed by	Date					
J.L.A./A.G.	05-06					
Drawn by	Date					
P.G./L.P./S.E.	05-06					
Checked by	Date					
S.E.	05-06	1	5/06	OA	SE	100% SUBMITTAL
Approved by	Date	No.	Date	By / Chk	App.	Revisions

NORTH CORRIDOR METRORAIL EXTENSION - PRELIMINARY ENGINEERING (100%) SUBMITTAL

UTILITY AND DRAINAGE PLANS

MIAMI-DADE COUNTY

MIAMI-DADE TRANSIT

PARSONS
7600 CORPORATE CENTER DRIVE, SUITE 500
MIAMI, FLORIDA 33126
PHONE: (786) 464-1000 FAX: (786) 845-7119
CERTIFICATE OF AUTHORIZATION NO. 1838

Approved | Date

Nova Consulting, Inc.
10486 NW 31st Terrace, Miami, Florida, 33172
Florida Certification No. 7256

Approved | Date

UTILITY RELOCATION AND DRAINAGE PLANS

Scale 1"=100' | Drawing UDP-17 | Sheet 174

N

0 20 100
Feet

MATCH LINE STA. 315+00

MATCH LINE STA. 329+00

NOTE:
UTILITY LOCATIONS ARE BASED ON PRELIMINARY INFORMATION PROVIDED VIA THIRD PARTIES. LOCATIONS ARE APPROXIMATE AND NOT GUARANTEED.

VARIOUS	05-06					
Designed by	Date					
J.L.A./A.G.	05-06					
Drawn by	Date					
P.G./L.P./S.E.	05-06					
Checked by	Date					
S.E.	05-06	1	5/06	OA	SE	100% SUBMITTAL
Approved by	Date	No.	Date	By / Chk	App.	Revisions

NORTH CORRIDOR METRORAIL EXTENSION - PRELIMINARY ENGINEERING (100%) SUBMITTAL

UTILITY AND DRAINAGE PLANS

MIAMI-DADE COUNTY

MIAMI-DADE TRANSIT

PARSONS
7600 CORPORATE CENTER DRIVE, SUITE 500
MIAMI, FLORIDA 33126
PHONE: (786) 464-1000 FAX: (786) 845-7119
CERTIFICATE OF AUTHORIZATION NO. 1838

Approved | Date

Nova Consulting, Inc.
10486 NW 31st Terrace, Miami, Florida, 33172
Florida Certification No. 7256

Approved | Date

UTILITY RELOCATION AND DRAINAGE PLANS

Scale 1"=100' | Drawing UDP-18 | Sheet 175

N

0 20 100
Feet

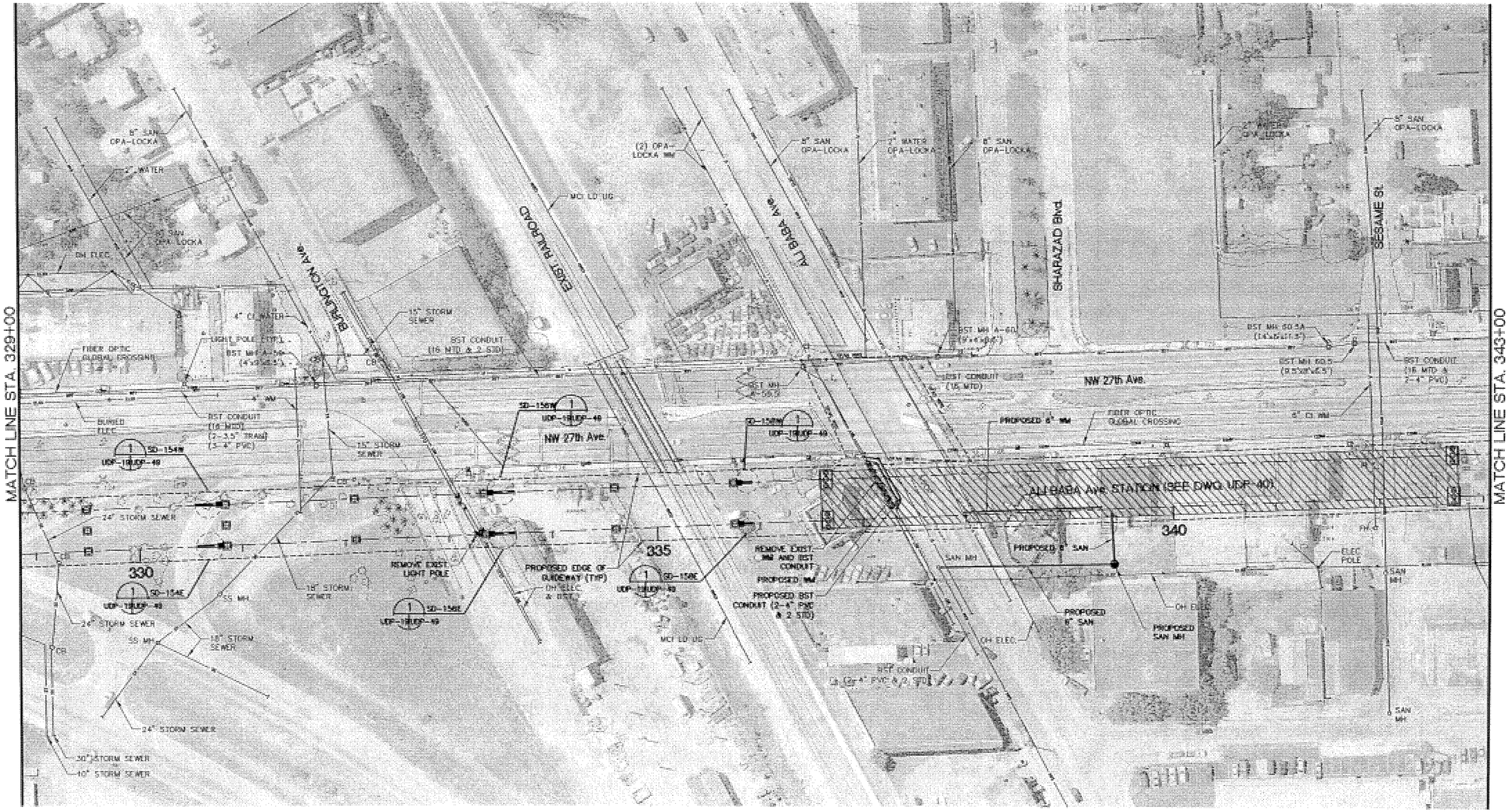

NOTE:
UTILITY LOCATIONS ARE BASED ON PRELIMINARY INFORMATION PROVIDED VIA THIRD PARTIES. LOCATIONS ARE APPROXIMATE AND NOT GUARANTEED.

VARIOUS	05-06					
Designed by	Date					
J.L.A./A.G.	05-06					
Drawn by	Date					
P.G./L.P./S.E.	05-06					
Checked by	Date					
S.E.	05-06	1	5/06	OA	SE	100% SUBMITTAL
Approved by	Date	No.	Date	By / Chk	App.	Revisions

NORTH CORRIDOR METRORAIL EXTENSION - PRELIMINARY ENGINEERING (100%) SUBMITTAL

UTILITY AND DRAINAGE PLANS

MIAMI-DADE COUNTY
MIAMI-DADE TRANSIT

PARSONS
7600 CORPORATE CENTER DRIVE, SUITE 500
MIAMI, FLORIDA 33126
PHONE: (786) 464-1000 FAX: (786) 845-7119
CERTIFICATE OF AUTHORIZATION NO. 1838

Nova Consulting, Inc.
10486 NW 31st Terrace, Miami, Florida, 33172
Florida Certification No. 7256

Approved | Date | Approved | Date

UTILITY RELOCATION AND DRAINAGE PLANS

Scale 1"=100' | Drawing UDP-19 | Sheet 176

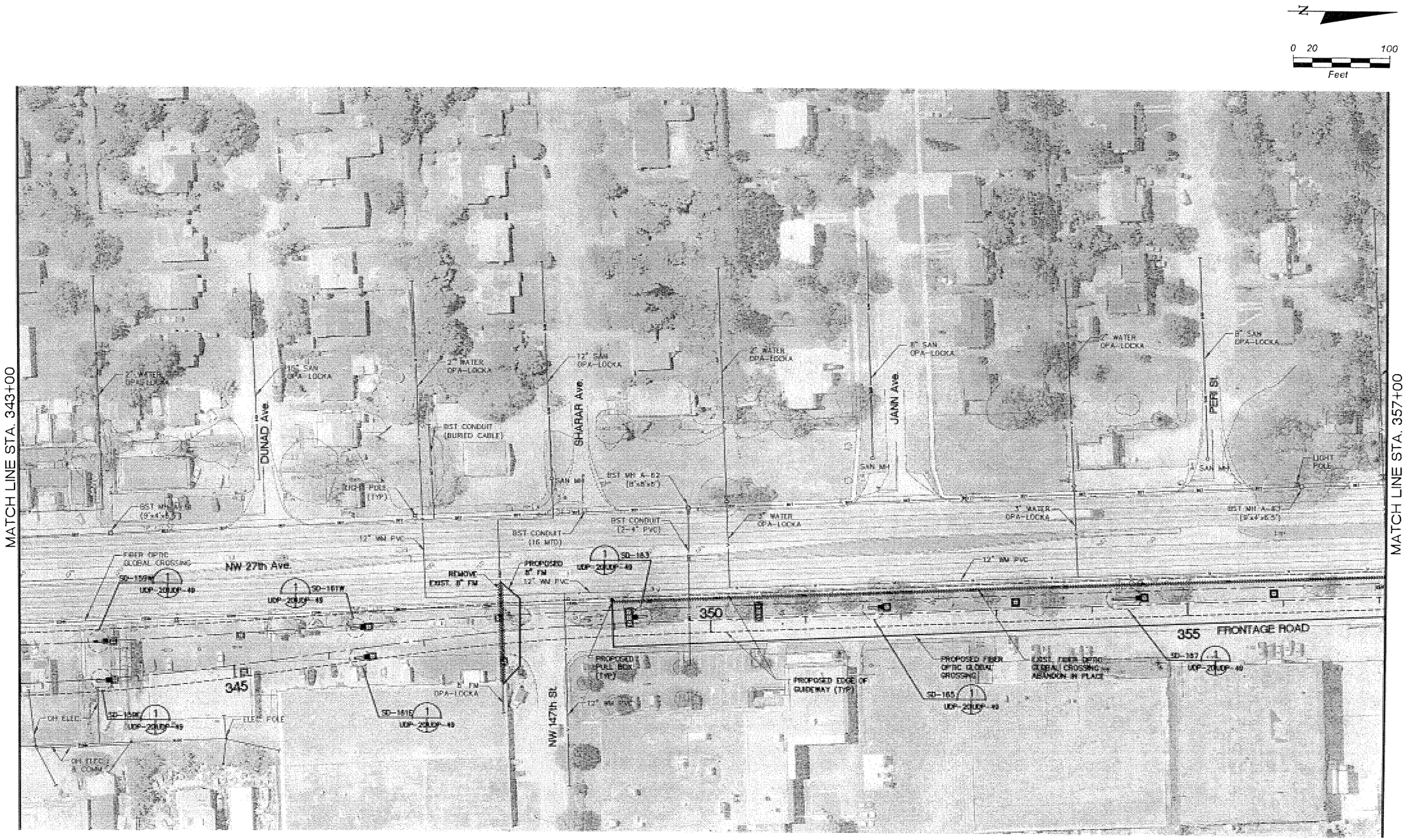

NOTE:
UTILITY LOCATIONS ARE BASED ON PRELIMINARY INFORMATION PROVIDED VIA THIRD PARTIES. LOCATIONS ARE APPROXIMATE AND NOT GUARANTEED.

VARIOUS	05-06					
Designed by	Date					
J.L.A./A.G.	05-06					
Drawn by	Date					
P.G./L.P./S.E.	05-06					
Checked by	Date					
S.E.	05-06	1	5/06	OA	SE	100% SUBMITTAL
Approved by	Date	No.	Date	By / Chk	App.	Revisions

NORTH CORRIDOR METRORAIL EXTENSION - PRELIMINARY ENGINEERING (100%) SUBMITTAL

MIAMI-DADE COUNTY

MIAMI-DADE TRANSIT

PARSONS
7600 CORPORATE CENTER DRIVE, SUITE 500
MIAMI, FLORIDA 33126
PHONE: (786) 464-1000 FAX: (786) 845-7119
CERTIFICATE OF AUTHORIZATION NO. 1838

Approved | Date

Nova Consulting, Inc.
10486 NW 31st Terrace, Miami, Florida, 33172
Florida Certification No. 7256

Approved | Date

UTILITY AND DRAINAGE PLANS

UTILITY RELOCATION AND DRAINAGE PLANS

Scale 1"=100' | Drawing UOP-20 | Sheet 177

N

0 20 100
Feet

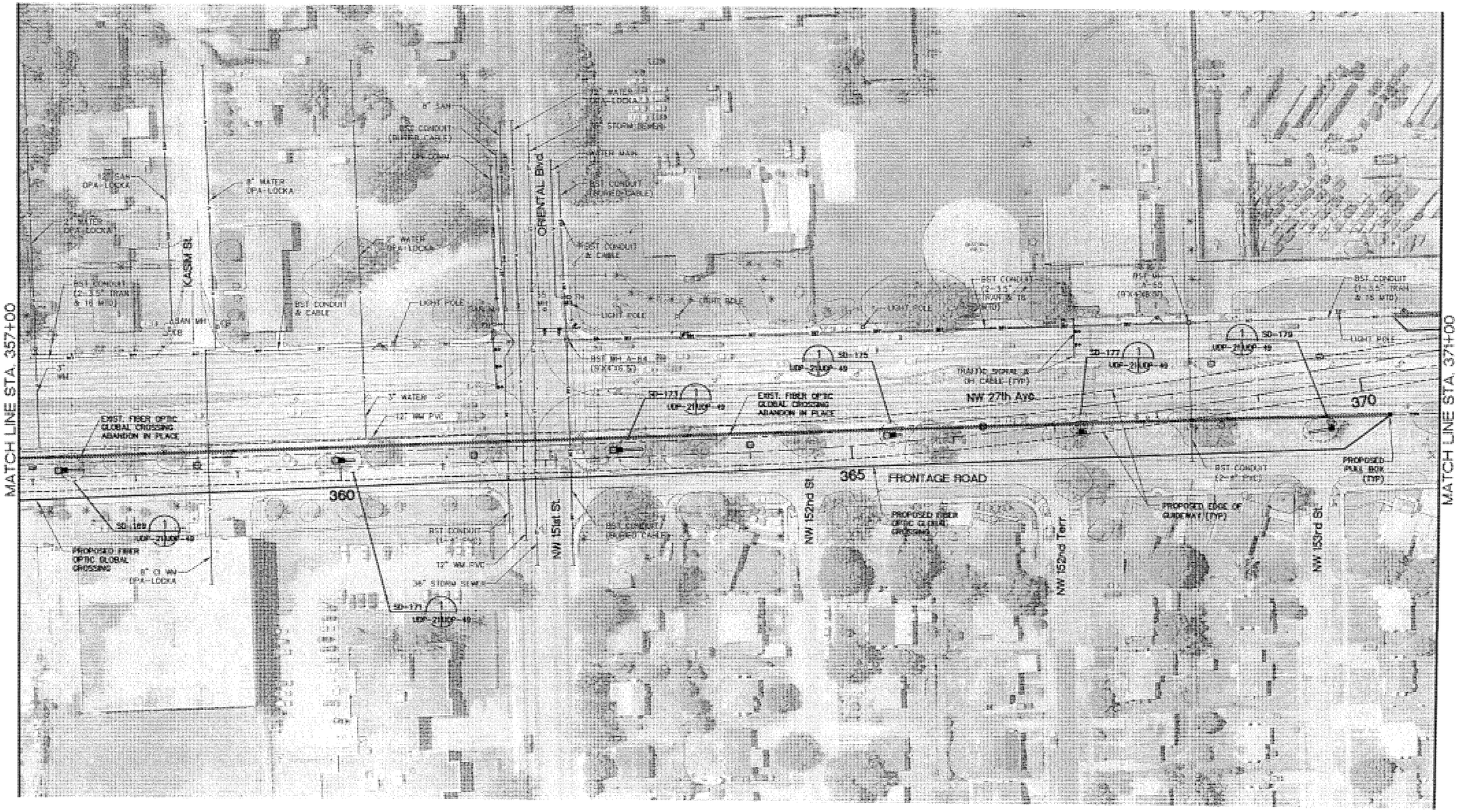

NOTE:
UTILITY LOCATIONS ARE BASED ON PRELIMINARY INFORMATION PROVIDED VIA THIRD PARTIES. LOCATIONS ARE APPROXIMATE AND NOT GUARANTEED.

VARIOUS	05-06					
Designed by	Date					
J.L.A./A.G.	05-06					
Drawn by	Date					
P.G./L.P./S.E.	05-06					
Checked by	Date					
S.E.	05-06	1	5/06	OA	SE	100% SUBMITTAL
Approved by	Date	No.	Date	By / Chk	App.	Revisions

NORTH CORRIDOR METRORAIL EXTENSION - PRELIMINARY ENGINEERING (100%) SUBMITTAL

UTILITY AND DRAINAGE PLANS

MIAMI-DADE COUNTY
MIAMI-DADE TRANSIT

PARSONS
7600 CORPORATE CENTER DRIVE, SUITE 500
MIAMI, FLORIDA 33126
PHONE: (786) 464-1000 FAX: (786) 845-7119
CERTIFICATE OF AUTHORIZATION NO. 1638
Approved | Date

Nova Consulting, Inc.
10486 NW 31st Terrace, Miami, Florida, 33172
Florida Certification No. 7256
Approved | Date

UTILITY RELOCATION AND DRAINAGE PLANS

Scale 1"=100' | Drawing UDP-21 | Sheet 178

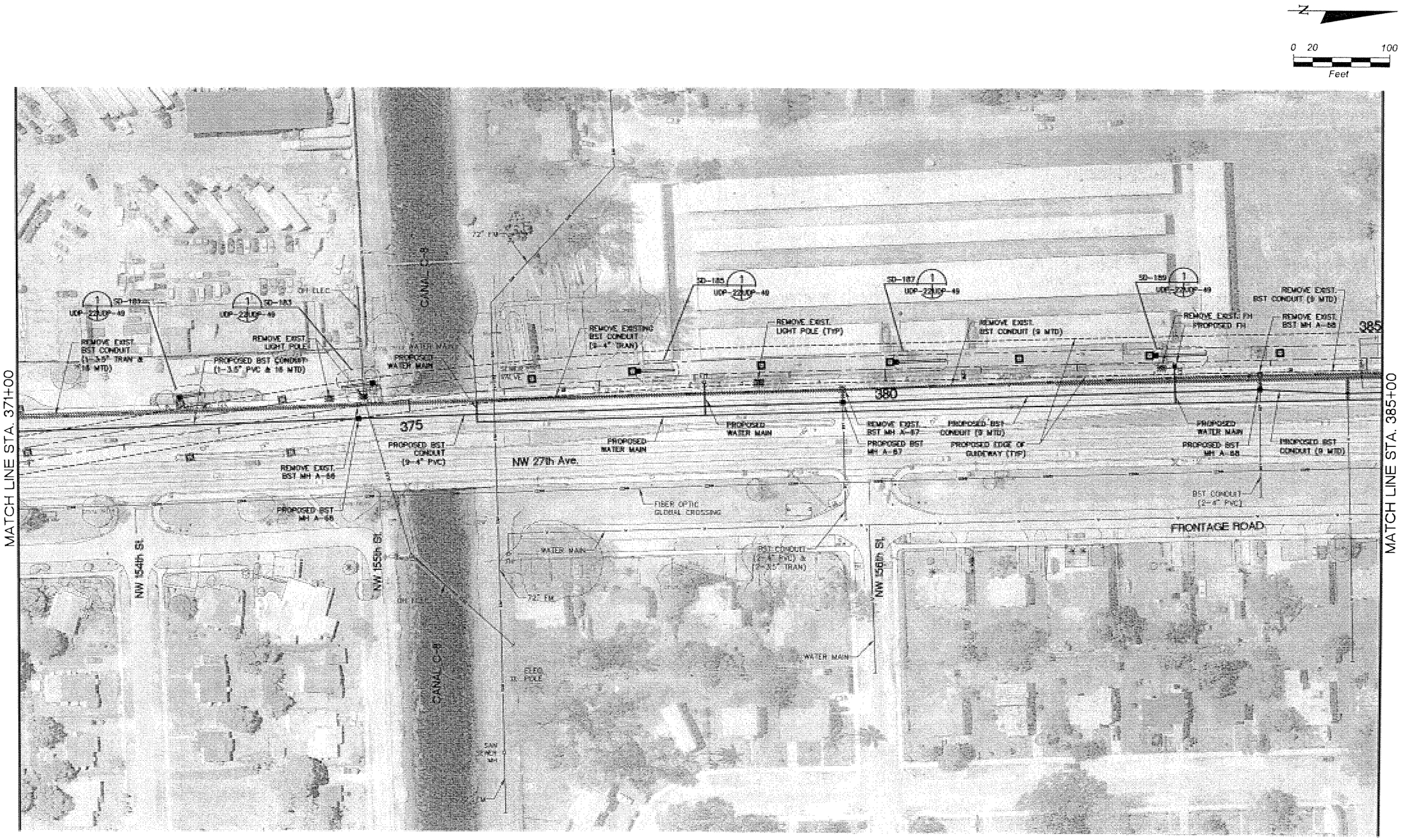

NOTE:
UTILITY LOCATIONS ARE BASED ON PRELIMINARY INFORMATION PROVIDED VIA THIRD PARTIES. LOCATIONS ARE APPROXIMATE AND NOT GUARANTEED.

VARIOUS	05-06					
Designed by	Date					
J.L.A./A.G.	05-06					
Drawn by	Date					
P.G./L.P./S.E.	05-06					
Checked by	Date					
S.E.	05-06	1	5/06	OA	SE	100% SUBMITTAL
Approved by	Date	No.	Date	By/Chk	App.	Revisions

NORTH CORRIDOR METRORAIL EXTENSION - PRELIMINARY ENGINEERING (100%) SUBMITTAL

MIAMI-DADE COUNTY

MIAMI-DADE TRANSIT

PARSONS
7600 CORPORATE CENTER DRIVE, SUITE 500
MIAMI, FLORIDA 33126
PHONE: (786) 464-1000 FAX: (786) 845-7119
CERTIFICATE OF AUTHORIZATION NO. 1838

Approved | Date

Nova Consulting, Inc.
10486 NW 31st Terrace, Miami, Florida, 33172
Florida Certification No. 7256

Approved | Date

UTILITY AND DRAINAGE PLANS

UTILITY RELOCATION AND DRAINAGE PLANS

Scale 1"=100' | Drawing UDP-22 | Sheet 179

N

0 20 100
Feet

MATCH LINE STA. 385+00

MATCH LINE STA. 399+00

385

390

395

NW 152nd St

NW 153rd St STATION (SEE DWG UDP-40)

NW 160th St

NW 27th Ave

FRONTAGE ROAD

BST CONDUIT (BURIED CABLE)

WATER MAIN

REMOVE EXIST. WATER MAIN

REMOVE EXIST. BST MH A-59

REMOVE EXIST. BST CONDUIT (9 MTD)

SD-191 UDP-23/UDP-49

SD-193W UDP-23/UDP-49

PROPOSED GAS

REMOVE EXIST. GAS

3" GAS

PROPOSED BST CONDUIT (9 MTD)

PROPOSED WATER MAIN

REMOVE EXIST. LIGHT POLE

PROPOSED BST MH A-59

SD-195W UDP-23/UDP-49

PROPOSED EDGE OF GUIDEWAY (TYP)

REMOVE EXIST. LIGHT POLE (TYP)

SD-197W UDP-23/UDP-49

TRAFFIC SIGNAL (TYP)

TRAFFIC OH (TYP)

STORM SEWER

REMOVE EXIST. LIGHT POLE

REMOVE EXIST LIGHT POLE

SD-197C UDP-23/UDP-49

EXISTING BST MH A-70 (8'X4'X6') (TO REMAIN)

BST CONDUIT (9 MTD)

PROPOSED 8" SAN

PROPOSED SAN PUMP STATION

N. MIAMI BEACH PUBLIC WORKS WATER

PROPOSED 8" FM

BST CONDUIT (2-4" PVC)

FIBER OPTIC GLOBAL CROSSING

BST CONDUIT (2-4" PVC)

NOTE:
UTILITY LOCATIONS ARE BASED ON PRELIMINARY INFORMATION PROVIDED VIA THIRD PARTIES. LOCATIONS ARE APPROXIMATE AND NOT GUARANTEED.

VARIOUS	05-06					
Designed by	Date					
J.L.A./A.G.	05-06					
Drawn by	Date					
P.G./L.P./S.E.	05-06					
Checked by	Date					
S.E.	05-06	1	5/06	OA	SE	100% SUBMITTAL
Approved by	Date	No.	Date	By / Chk	App.	Revisions

NORTH CORRIDOR METRORAIL EXTENSION - PRELIMINARY ENGINEERING (100%) SUBMITTAL

UTILITY AND DRAINAGE PLANS

MIAMI-DADE COUNTY

MIAMI-DADE TRANSIT

PARSONS
7600 CORPORATE CENTER DRIVE, SUITE 500
MIAMI, FLORIDA 33126
PHONE: (786) 464-1000 FAX: (786) 845-7119
CERTIFICATE OF AUTHORIZATION NO. 1838

Approved | Date

Nova Consulting, Inc.
10486 NW 31st Terrace, Miami, Florida, 33172
Florida Certification No. 7256

Approved | Date

UTILITY RELOCATION AND DRAINAGE PLANS

Scale 1"=100' | Drawing UDP-23 | Sheet 180

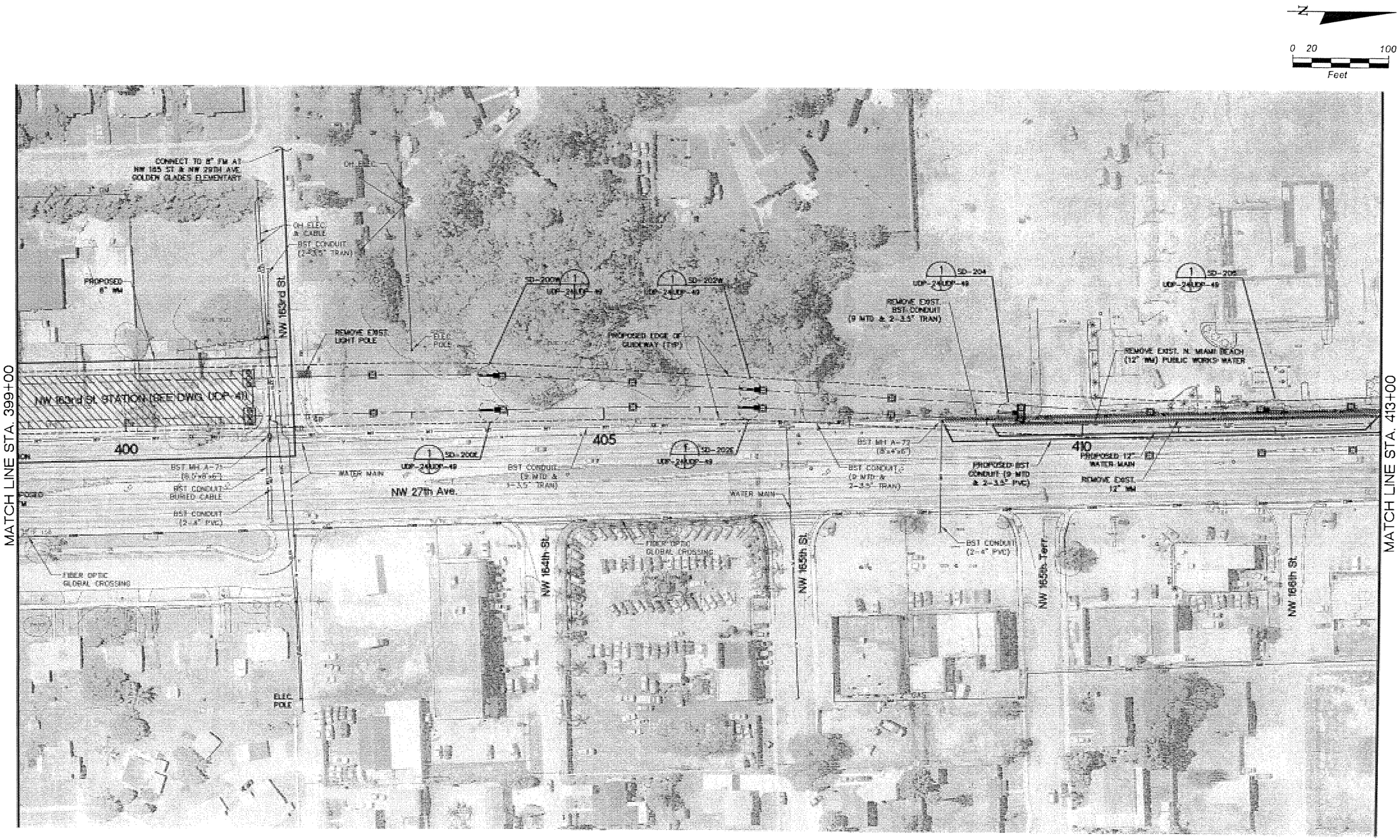

NOTE:
UTILITY LOCATIONS ARE BASED ON PRELIMINARY INFORMATION PROVIDED VIA THIRD PARTIES. LOCATIONS ARE APPROXIMATE AND NOT GUARANTEED.

VARIOUS	05-06					
Designed by	Date					
J.L.A./A.G.	05-06					
Drawn by	Date					
P.G./L.P./S.E.	05-06					
Checked by	Date					
S.E.	05-06	1	5/06	OA	SE	100% SUBMITTAL
Approved by	Date	No.	Date	By / Chk	App.	Revisions

NORTH CORRIDOR METRORAIL EXTENSION - PRELIMINARY ENGINEERING (100%) SUBMITTAL

MIAMI-DADE COUNTY

MIAMI-DADE TRANSIT

PARSONS
7600 CORPORATE CENTER DRIVE, SUITE 500
MIAMI, FLORIDA 33126
PHONE: (786) 464-1000 FAX: (786) 845-7119
CERTIFICATE OF AUTHORIZATION NO. 1838

Approved | Date

Nova Consulting, Inc.
10486 NW 31st Terrace, Miami, Florida, 33172
Florida Certification No. 7256

Approved | Date

UTILITY AND DRAINAGE PLANS

UTILITY RELOCATION AND DRAINAGE PLANS

Scale 1"=100' | Drawing UDP-24 | Sheet 181

N

0 20 100
Feet

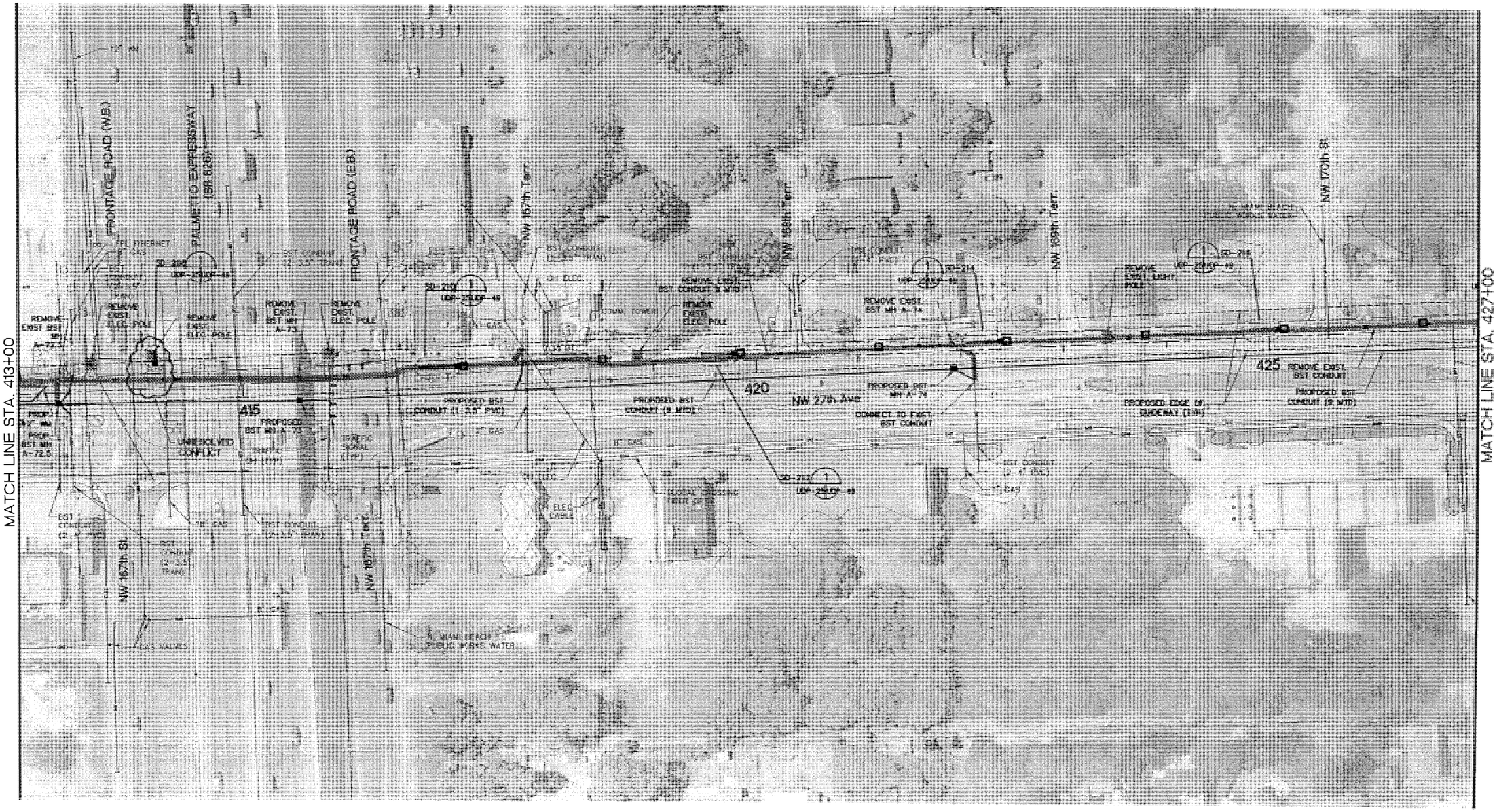

NOTE:
UTILITY LOCATIONS ARE BASED ON PRELIMINARY INFORMATION PROVIDED VIA THIRD PARTIES. LOCATIONS ARE APPROXIMATE AND NOT GUARANTEED.

VARIOUS	05-06					
Designed by	Date					
J.L.A./A.G.	05-06					
Drawn by	Date					
P.G./L.P./S.E.	05-06					
Checked by	Date					
S.E.	05-06	1	5/06	OA	SE	100% SUBMITTAL
Approved by	Date	No.	Date	By / Chk	App.	Revisions

NORTH CORRIDOR METRORAIL EXTENSION - PRELIMINARY ENGINEERING (100%) SUBMITTAL

UTILITY AND DRAINAGE PLANS

MIAMI-DADE COUNTY
MIAMI-DADE TRANSIT

PARSONS
7600 CORPORATE CENTER DRIVE, SUITE 500
MIAMI, FLORIDA 33126
PHONE: (786) 464-1000 FAX: (786) 845-7119
CERTIFICATE OF AUTHORIZATION NO. 1838
Approved | Date

Nova Consulting, Inc.
10486 NW 31st Terrace, Miami, Florida, 33172
Florida Certification No. 7256
Approved | Date

UTILITY RELOCATION AND DRAINAGE PLANS

Scale 1"=100' | Drawing UDP-25 | Sheet 182

N

0 20 100
Feet

MATCH LINE STA. 427+00

MATCH LINE STA. 441+00

NW 17th St.

NW 27th Ave.

NW 173rd Terr.

NW 170th Terr.

430

435

440

BST CONDUIT BURIED CABLE

REMOVE EXIST. BST CONDUIT (9 MTD)

REMOVE EXIST. BST MH A-75

REMOVE EXIST. LIGHT POLE

1 SD-218 UDF-26/UDF-49

1 SD-220 UDF-26/UDF-49

1 SD-222 UDF-26/UDF-49

1 SD-224 UDF-26/UDF-49

1 SD-226 UDF-26/UDF-49

8" SAN SEWER

SAN MH

STM MH

REMOVE EXIST. LIGHT POLE (TYP)

REMOVE EXIST. BST MH A-76A

REMOVE EXIST. BST MH A-76 (8'X8'X8')

PROPOSED BST CONDUIT (9 MTD)

REMOVE EXIST. BST CONDUIT (9 MTD & 1-3.5" IRON)

PROPOSED BST MH A-75

PROPOSED BST CONDUIT (9 MTD)

REMOVE EXIST. BST CONDUIT (9 MTD)

PROPOSED EDGE OF GUIDEWAY (TYP)

PROPOSED CB

PROPOSED 15" SS

PROPOSED BST MH A-76

PROPOSED BST MH A-76A

REMOVE EXIST. 15" SS

PROPOSED BST CONDUIT (9 MTD & 1-3.5" PVC)

PROPOSED TRAFFIC ELEC CABLE SIGNAL

BST CONDUIT (7" PVC)

SIGNAL CROSSING FIBER OPTIC

N. MIAMI BEACH PUBLIC WORKS WATER MAIN

3" GAS

NOTE:
UTILITY LOCATIONS ARE BASED ON PRELIMINARY INFORMATION PROVIDED VIA THIRD PARTIES. LOCATIONS ARE APPROXIMATE AND NOT GUARANTEED.

VARIOUS	05-06					
Designed by	Date					
J.L.A./A.G.	05-06					
Drawn by	Date					
P.G./L.P./S.E.	05-06					
Checked by	Date					
S.E.	05-06					
Approved by	Date	1	5/06	OA	SE	100% SUBMITTAL
		No.	Date	By / Chk	App.	Revisions

NORTH CORRIDOR METRORAIL EXTENSION - PRELIMINARY ENGINEERING (100%) SUBMITTAL

UTILITY AND DRAINAGE PLANS

MIAMI-DADE COUNTY

MIAMI-DADE TRANSIT

PARSONS
7600 CORPORATE CENTER DRIVE, SUITE 500
MIAMI, FLORIDA 33126
PHONE: (786) 464-1000 FAX: (786) 845-7119
CERTIFICATE OF AUTHORIZATION NO. 1838

Approved Date

Nova Consulting, Inc.
10486 NW 31st Terrace, Miami, Florida, 33172
Florida Certification No. 7256

Approved Date

UTILITY RELOCATION AND DRAINAGE PLANS

Scale 1"=100' | Drawing UDP-26 | Sheet 183

N

0 20 100
Feet

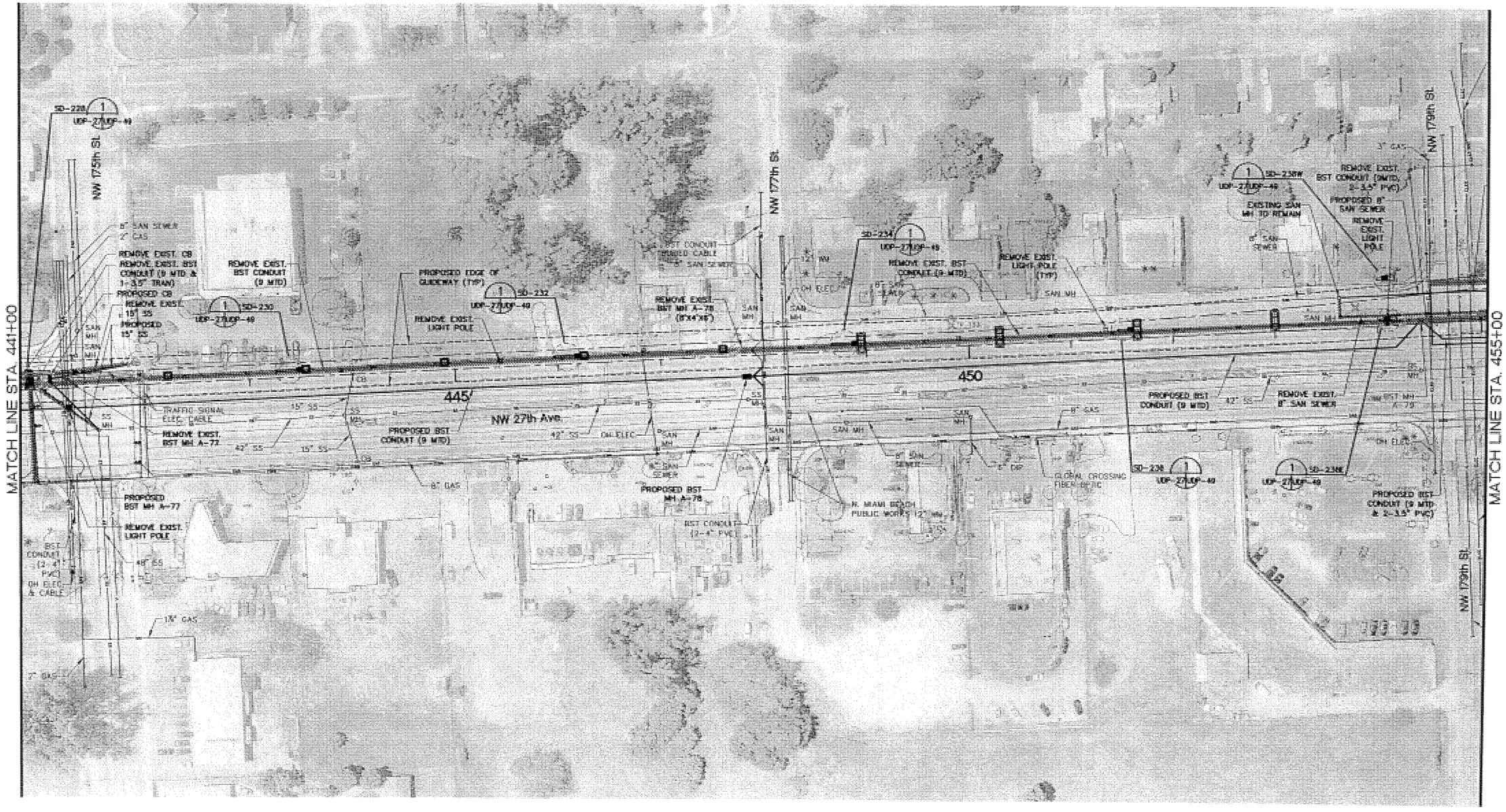

NOTE:
UTILITY LOCATIONS ARE BASED ON PRELIMINARY INFORMATION PROVIDED VIA THIRD PARTIES. LOCATIONS ARE APPROXIMATE AND NOT GUARANTEED.

VARIOUS Designed by	05-06 Date					
J.L.A./A.G. Drawn by	05-06 Date					
P.G./L.P./S.E. Checked by	05-06 Date					
S.E. Approved by	05-06 Date	1 No.	5/06 Date	OA By / Chk	SE App.	100% SUBMITTAL Revisions

NORTH CORRIDOR METRORAIL EXTENSION - PRELIMINARY ENGINEERING (100%) SUBMITTAL

MIAMI-DADE COUNTY
MIAMI-DADE TRANSIT

PARSONS
7600 CORPORATE CENTER DRIVE, SUITE 500
MIAMI, FLORIDA 33126
PHONE: (786) 464-1000 FAX: (786) 845-7119
CERTIFICATE OF AUTHORIZATION NO. 1838
Approved Date

Nova Consulting, Inc.
10486 NW 31st Terrace, Miami, Florida, 33172
Florida Certification No. 7256
Approved Date

UTILITY AND DRAINAGE PLANS

UTILITY RELOCATION AND DRAINAGE PLANS

Scale 1"=100' | Drawing UDP-27 | Sheet 12

N

0 20 100
Feet

MATCH LINE STA. 455+00

MATCH LINE STA. 469+00

NW 183rd St STATION (SEE DWG. UDP-42)

NW 27th Ave.

NW 179th St

MIAMI GARDENS DRIVE

120 KV OH TRANSMISSION LINE

OH ELEC

SD-240W

SD-240E

SD-242W

SD-242E

UDP-28/UDP-49

PROPOSED EDGE OF GUIDEWAY (TYP)

REMOVE EXIST. BST CONDUIT (9 MTD. 2-3.5" TRAN)

PROPOSED 8" SAN SEWER

REMOVE EXIST. 8" GAS

PROP. SAN MH

8" SAN SEWER

PROPOSED SAN PUMP STATION

EXIST. FPL UG ELEC. ABANDON IN PLACE

PROPOSED FPL UG ELEC.

REMOVE EXIST. BST CONDUIT (9 MTD & 2-3.5" TRAN)

PROPOSED 6" SAN

455

460

465

LIGHT POLE

PROP. 3" GAS

15" SS

PROPOSED BST CONDUIT (9 MTD & 2-3.5" PVC)

PROPOSED 2" FM

BST CONDUIT (2-4" PVC)

SS MH

BST MH A-60

N. MIAMI BEACH PUBLIC WORKS WATER

GLOBAL CROSSING FIBER OPTIC

SAN SEWER

8" GAS

OH ELEC & CABLE

4" PVC FPL

FPL POLE

OH ELEC 13KV, CABLE & BST

BST CONDUIT (9 MTD)

REMOVE EXIST. LIGHT POLE

UNRESOLVED CONFLICT

CONTIN. BURIED CABLE

STORM SEWER

8" WM

REMOVE EXIST. LIGHT POLE

TRAFFIC SIGNAL (TYP) REMOVE EXIST. ELEC. POLE W/TRANSF.

REMOVE EXIST. LIGHT POLE

BST MH A-60

N. MIAMI BEACH PUBLIC WORKS WATER

BST CONDUIT (12 MTD & (2-3.5" TRAN)

BST CONDUIT (12-4" PVC)

FPL FIBERNET

12" WM

NOTE:
UTILITY LOCATIONS ARE BASED ON PRELIMINARY INFORMATION PROVIDED VIA THIRD PARTIES. LOCATIONS ARE APPROXIMATE AND NOT GUARANTEED.

VARIOUS	05-06					
Designed by	Date					
J.L.A./A.G.	05-06					
Drawn by	Date					
P.G./L.P./S.E.	05-06					
Checked by	Date					
S.E.	05-06	1	5/06	OA	SE	100% SUBMITTAL
Approved by	Date	No.	Date	By / Chk	App.	Revisions

NORTH CORRIDOR METRORAIL EXTENSION - PRELIMINARY ENGINEERING (100%) SUBMITTAL

MIAMI-DADE COUNTY

MIAMI-DADE TRANSIT

PARSONS
7600 CORPORATE CENTER DRIVE, SUITE 500
MIAMI, FLORIDA 33126
PHONE: (786) 464-1000 FAX: (786) 845-7119
CERTIFICATE OF AUTHORIZATION NO. 1838
Approved Date

Nova Consulting, Inc.
10486 NW 31st Terrace, Miami, Florida, 33172
Florida Certification No. 7256
Approved Date

UTILITY AND DRAINAGE PLANS

UTILITY RELOCATION AND DRAINAGE PLANS

Scale 1"=100' | Drawing UDP-28 | Sheet 185

N

0 20 100
Feet

MATCH LINE STA. 469+00

MATCH LINE STA. 483+00

NOTE:
UTILITY LOCATIONS ARE BASED ON PRELIMINARY INFORMATION PROVIDED VIA THIRD PARTIES. LOCATIONS ARE APPROXIMATE AND NOT GUARANTEED.

VARIOUS	05-06					
Designed by	Date					
J.L.A./A.G.	05-06					
Drawn by	Date					
P.G./L.P./S.E.	05-06					
Checked by	Date					
S.E.	05-06	1	5/06	OA	SE	100% SUBMITTAL
Approved by	Date	No.	Date	by / Chk	App.	Revisions

NORTH CORRIDOR METRORAIL EXTENSION - PRELIMINARY ENGINEERING (100%) SUBMITTAL

MIAMI-DADE COUNTY

MIAMI-DADE TRANSIT

PARSONS
7600 CORPORATE CENTER DRIVE, SUITE 500
MIAMI, FLORIDA 33126
PHONE: (786) 464-1000 FAX: (786) 845-7119
CERTIFICATE OF AUTHORIZATION NO. 1838

Approved | Date

Nova Consulting, Inc.
10486 NW 31st Terrace, Miami, Florida, 33172
Florida Certification No. 7256

Approved | Date

UTILITY AND DRAINAGE PLANS

UTILITY RELOCATION AND DRAINAGE PLANS

Scale 1"=100' | Drawing UDP-29 | Sheet 186

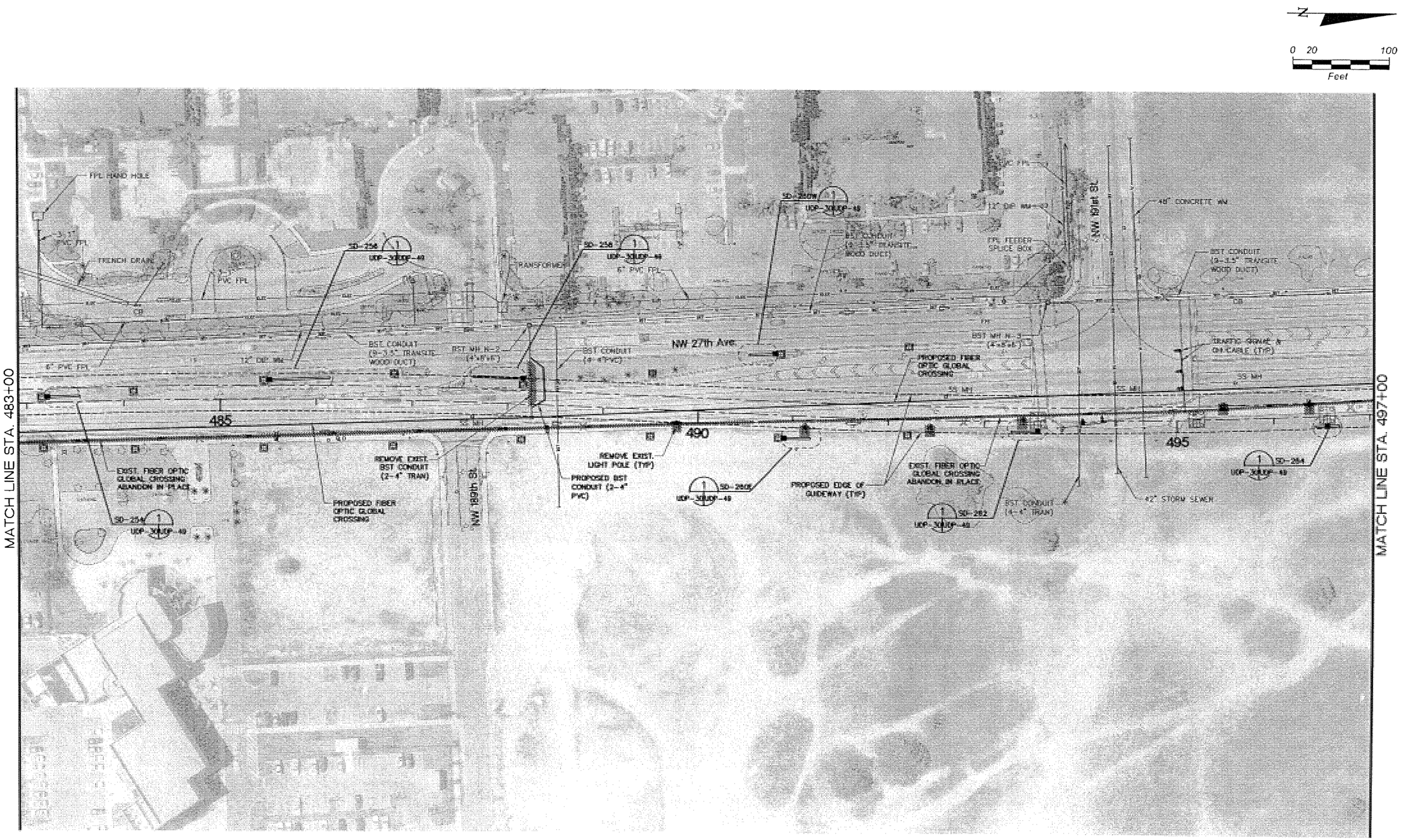

NOTE:
UTILITY LOCATIONS ARE BASED ON PRELIMINARY INFORMATION PROVIDED VIA THIRD PARTIES. LOCATIONS ARE APPROXIMATE AND NOT GUARANTEED.

VARIOUS	05-06					
Designed by	Date					
J.L.A./A.G.	05-06					
Drawn by	Date					
P.G./L.P./S.E.	05-06					
Checked by	Date					
S.E.	05-06	1	5/06	OA	SE	100% SUBMITTAL
Approved by	Date	No.	Date	By / Chk	App.	Revisions

NORTH CORRIDOR METRORAIL EXTENSION - PRELIMINARY ENGINEERING (100%) SUBMITTAL

MIAMI-DADE COUNTY

MIAMI-DADE TRANSIT

PARSONS
7600 CORPORATE CENTER DRIVE, SUITE 500
MIAMI, FLORIDA 33126
PHONE: (786) 464-1000 FAX: (786) 845-7119
CERTIFICATE OF AUTHORIZATION NO. 1838

Approved | Date

Nova Consulting, Inc.
10486 NW 31st Terrace, Miami, Florida, 33172
Florida Certification No. 7256

Approved | Date

UTILITY AND DRAINAGE PLANS

UTILITY RELOCATION AND DRAINAGE PLANS

Scale 1"=100' | Drawing UDP-30 | Sheet 1/27

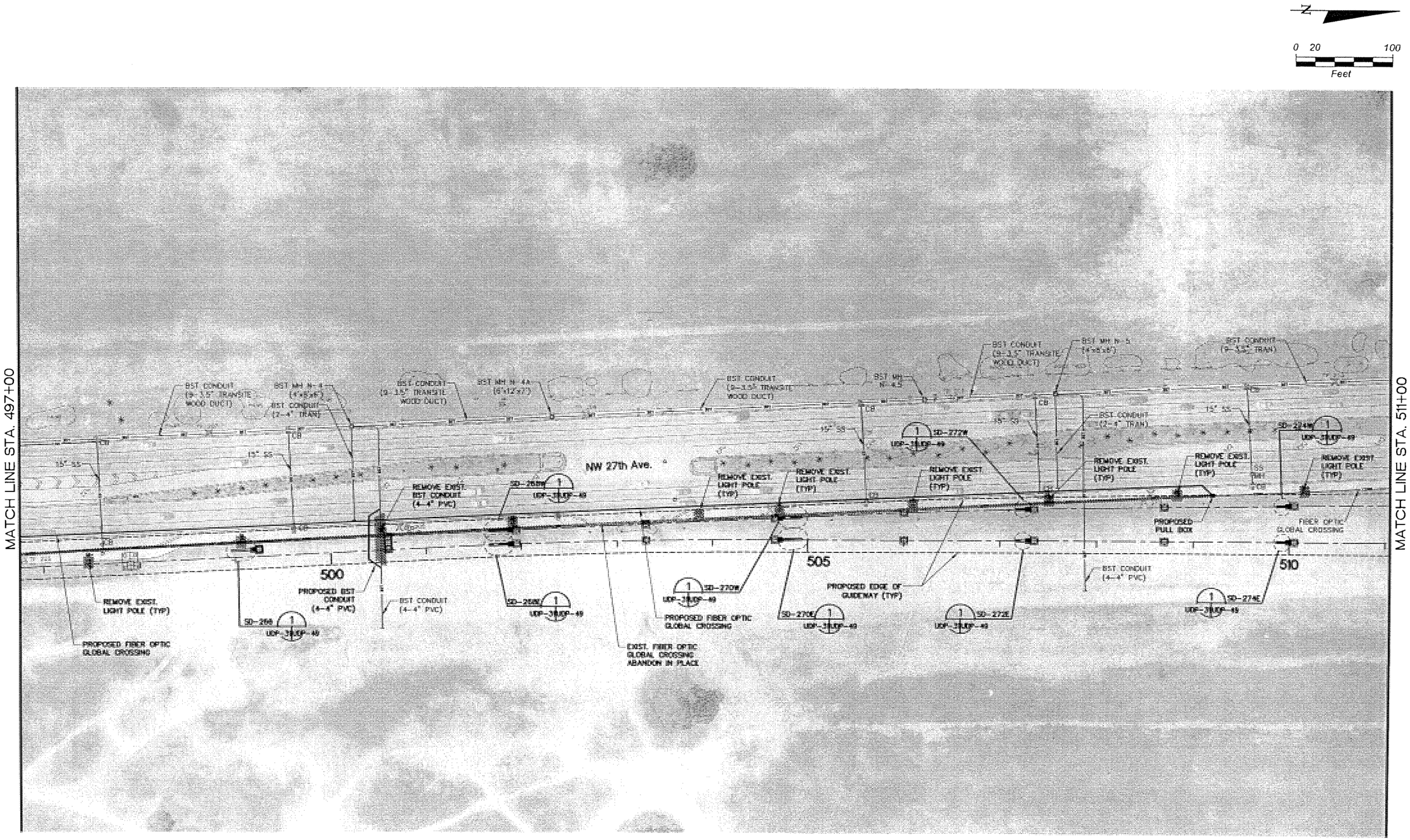

NOTE:
UTILITY LOCATIONS ARE BASED ON PRELIMINARY INFORMATION PROVIDED VIA THIRD PARTIES. LOCATIONS ARE APPROXIMATE AND NOT GUARANTEED.

VARIOUS	05-06					
Designed by	Date					
J.L.A./A.G.	05-06					
Drawn by	Date					
P.G./L.P./S.E.	05-06					
Checked by	Date					
S.E.	05-06	1	5/06	OA	SE	100% SUBMITTAL
Approved by	Date	No.	Date	By / Chk	App.	Revisions

NORTH CORRIDOR METRORAIL EXTENSION - PRELIMINARY ENGINEERING (100%) SUBMITTAL

MIAMI-DADE COUNTY

MIAMI-DADE TRANSIT

PARSONS
7600 CORPORATE CENTER DRIVE, SUITE 500
MIAMI, FLORIDA 33126
PHONE: (786) 464-1000 FAX: (786) 845-7119
CERTIFICATE OF AUTHORIZATION NO. 1838

Approved | Date

Nova Consulting, Inc.
10486 NW 31st Terrace, Miami, Florida, 33172
Florida Certification No. 7256

Approved | Date

UTILITY AND DRAINAGE PLANS

UTILITY RELOCATION AND DRAINAGE PLANS

Scale 1"=100' | Drawing UDP-31 | Sheet 100

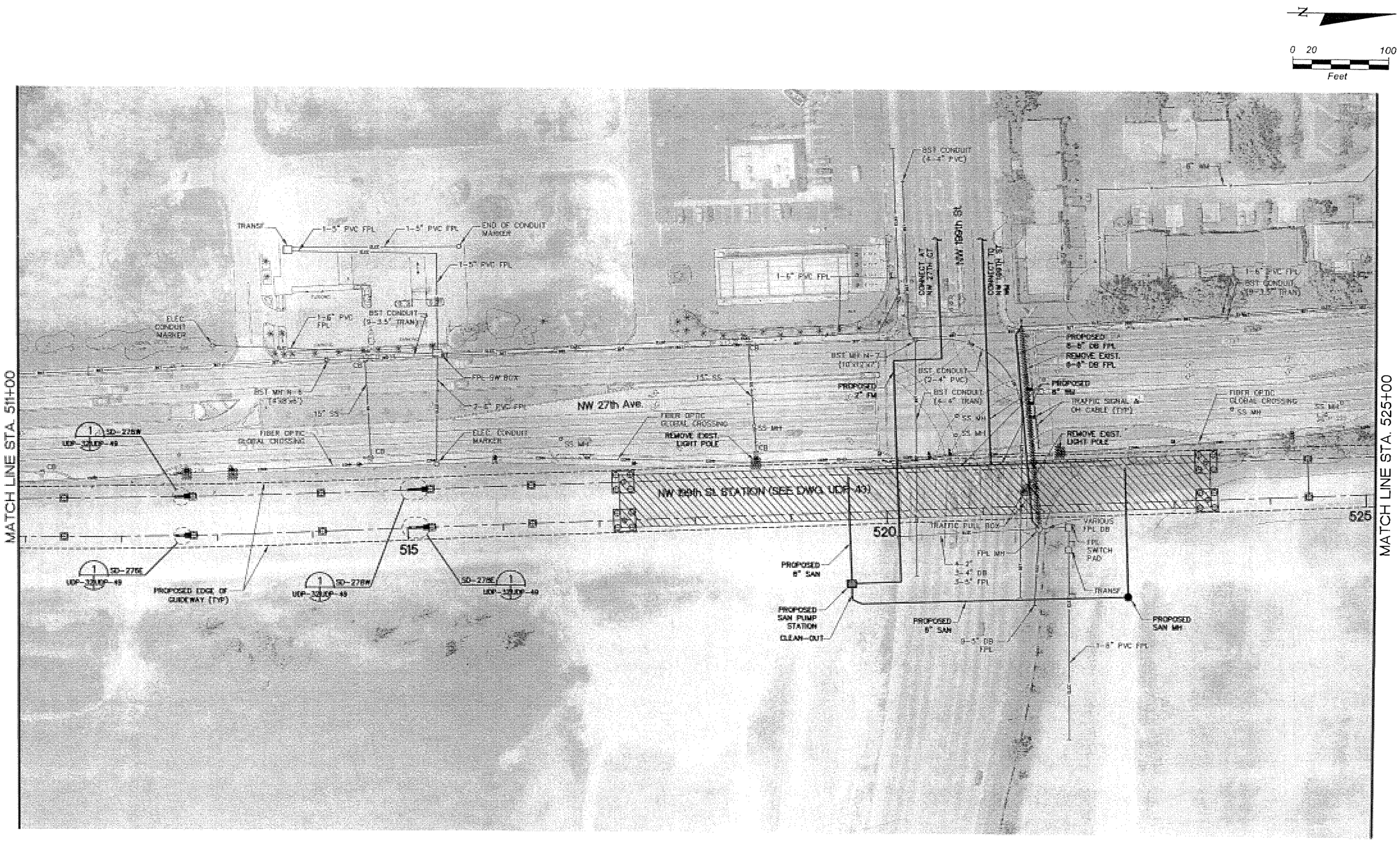

NOTE:
UTILITY LOCATIONS ARE BASED ON PRELIMINARY INFORMATION PROVIDED VIA THIRD PARTIES. LOCATIONS ARE APPROXIMATE AND NOT GUARANTEED.

VARIOUS	05-06					
Designed by	Date					
J.L.A./A.G.	05-06					
Drawn by	Date					
P.G./L.P./S.E.	05-06					
Checked by	Date					
S.E.	05-06	1	5/06	OA	SE	100% SUBMITTAL
Approved by	Date	No.	Date	By / Chk	App.	Revisions

NORTH CORRIDOR METRORAIL EXTENSION - PRELIMINARY ENGINEERING (100%) SUBMITTAL

MIAMI-DADE COUNTY

MIAMI-DADE TRANSIT

PARSONS
7600 CORPORATE CENTER DRIVE, SUITE 500
MIAMI, FLORIDA 33126
PHONE: (786) 464-1000 FAX: (786) 845-7119
CERTIFICATE OF AUTHORIZATION NO. 1838

Approved | Date

Nova Consulting, Inc.
10486 NW 31st Terrace, Miami, Florida, 33172
Florida Certification No. 7256

Approved | Date

UTILITY AND DRAINAGE PLANS

UTILITY RELOCATION AND DRAINAGE PLANS

Scale 1"=100' | Drawing UDP-32 | Sheet 1/20

N

0 20 100
Feet

MATCH LINE STA. 525+00

MATCH LINE STA. 539+00

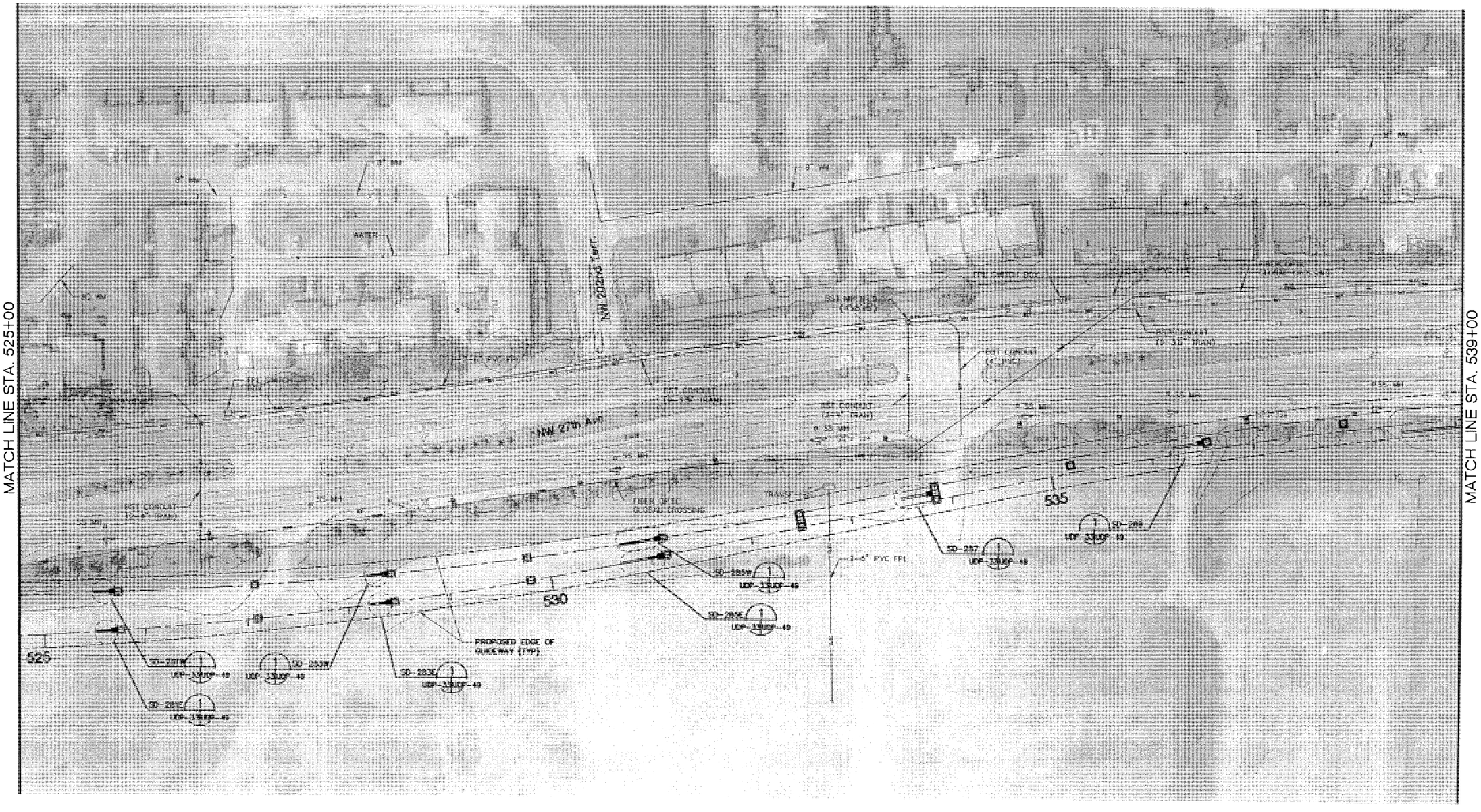

NOTE:
UTILITY LOCATIONS ARE BASED ON PRELIMINARY INFORMATION PROVIDED VIA THIRD PARTIES. LOCATIONS ARE APPROXIMATE AND NOT GUARANTEED.

VARIOUS Designed by	05-06 Date					
J.L.A./A.G. Drawn by	05-06 Date					
P.G./L.P./S.E. Checked by	05-06 Date					
S.E. Approved by	05-06 Date	1 No.	5/06 Date	OA By / Chk	SE App.	100% SUBMITTAL Revisions

NORTH CORRIDOR METRORAIL EXTENSION - PRELIMINARY ENGINEERING (100%) SUBMITTAL

MIAMI-DADE COUNTY

MIAMI-DADE TRANSIT

PARSONS
7600 CORPORATE CENTER DRIVE, SUITE 500
MIAMI, FLORIDA 33126
PHONE: (786) 464-1000 FAX: (786) 845-7119
CERTIFICATE OF AUTHORIZATION NO. 1838

Approved Date

Nova Consulting, Inc.
10486 NW 31st Terrace, Miami, Florida, 33172
Florida Certification No. 7256

Approved Date

UTILITY AND DRAINAGE PLANS

UTILITY RELOCATION AND DRAINAGE PLANS

Scale 1"=100' | Drawing UDP-33 | Sheet 12

N

0 20 100
Feet

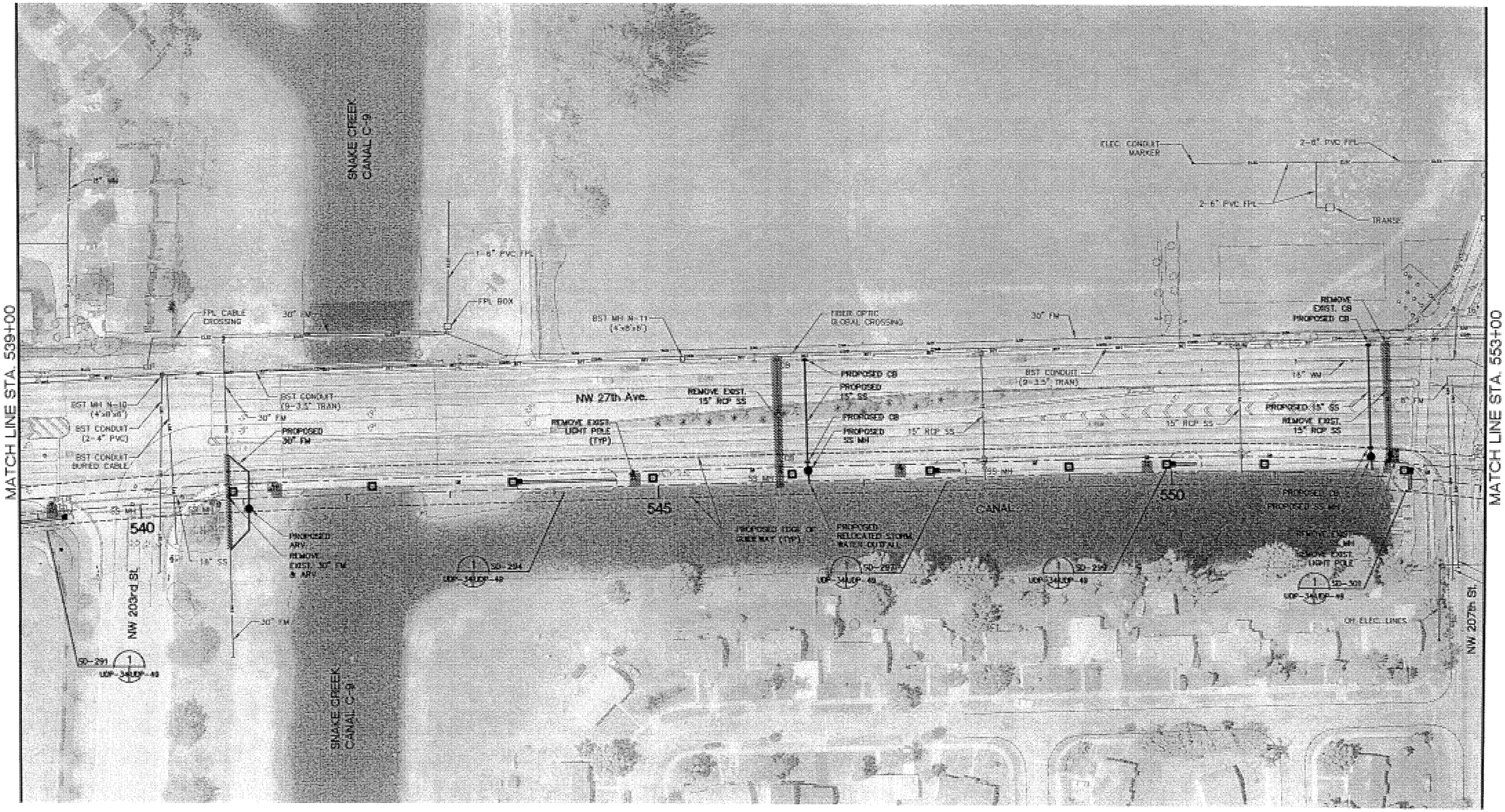

NOTE:
UTILITY LOCATIONS ARE BASED ON PRELIMINARY INFORMATION PROVIDED VIA THIRD PARTIES. LOCATIONS ARE APPROXIMATE AND NOT GUARANTEED.

VARIOUS	05-06					
Designed by	Date					
J.L.A./A.G.	05-06					
Drawn by	Date					
P.G./L.P./S.E.	05-06					
Checked by	Date					
S.E.	05-06	1	5/06	OA	SE	100% SUBMITTAL
Approved by	Date	No.	Date	by Chk	App.	Revisions

NORTH CORRIDOR METRORAIL EXTENSION - PRELIMINARY ENGINEERING (100%) SUBMITTAL

MIAMI-DADE COUNTY
MIAMI-DADE TRANSIT

PARSONS
7500 CORPORATE CENTER DRIVE, SUITE 500
MIAMI, FLORIDA 33126
PHONE: (786) 464-1000 FAX: (786) 845-7119
CERTIFICATE OF AUTHORIZATION NO. 1838
Approved Date

Nova Consulting, Inc.
10486 NW 31st Terrace, Miami, Florida, 33172
Florida Certification No. 7256
Approved Date

UTILITY AND DRAINAGE PLANS

UTILITY RELOCATION AND DRAINAGE PLANS

Scale 1"=100' | Drawing UDP-34 | Sheet C-1

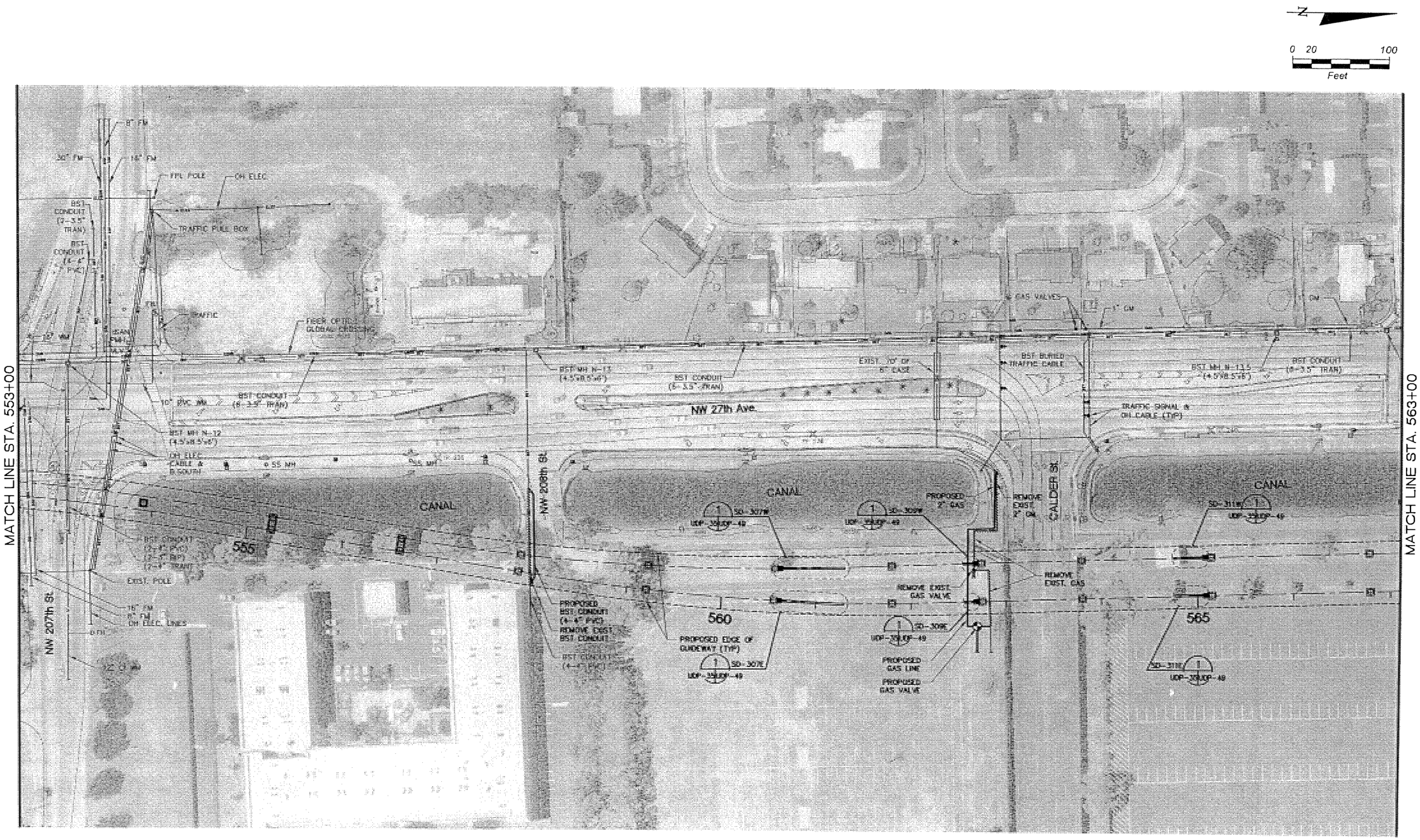

NOTE:
UTILITY LOCATIONS ARE BASED ON PRELIMINARY INFORMATION PROVIDED VIA THIRD PARTIES. LOCATIONS ARE APPROXIMATE AND NOT GUARANTEED.

VARIOUS	05-06					
Designed by	Date					
J.L.A./A.G.	05-06					
Drawn by	Date					
P.G./L.P./S.E.	05-06					
Checked by	Date					
S.E.	05-06	1	5/06	OA	SE	100% SUBMITTAL
Approved by	Date	No.	Date	By / Chk	App.	Revisions

NORTH CORRIDOR METRORAIL EXTENSION - PRELIMINARY ENGINEERING (100%) SUBMITTAL

MIAMI-DADE COUNTY

MIAMI-DADE TRANSIT

PARSONS
7600 CORPORATE CENTER DRIVE, SUITE 500
MIAMI, FLORIDA 33126
PHONE: (786) 464-1000 FAX: (786) 845-7119
CERTIFICATE OF AUTHORIZATION NO. 1838

Approved | Date

Nova Consulting, Inc.
10486 NW 31st Terrace, Miami, Florida, 33172
Florida Certification No. 7256

Approved | Date

UTILITY AND DRAINAGE PLANS

UTILITY RELOCATION AND DRAINAGE PLANS

Scale 1"=100' | Drawing UDP-35 | Sheet 1 of 3

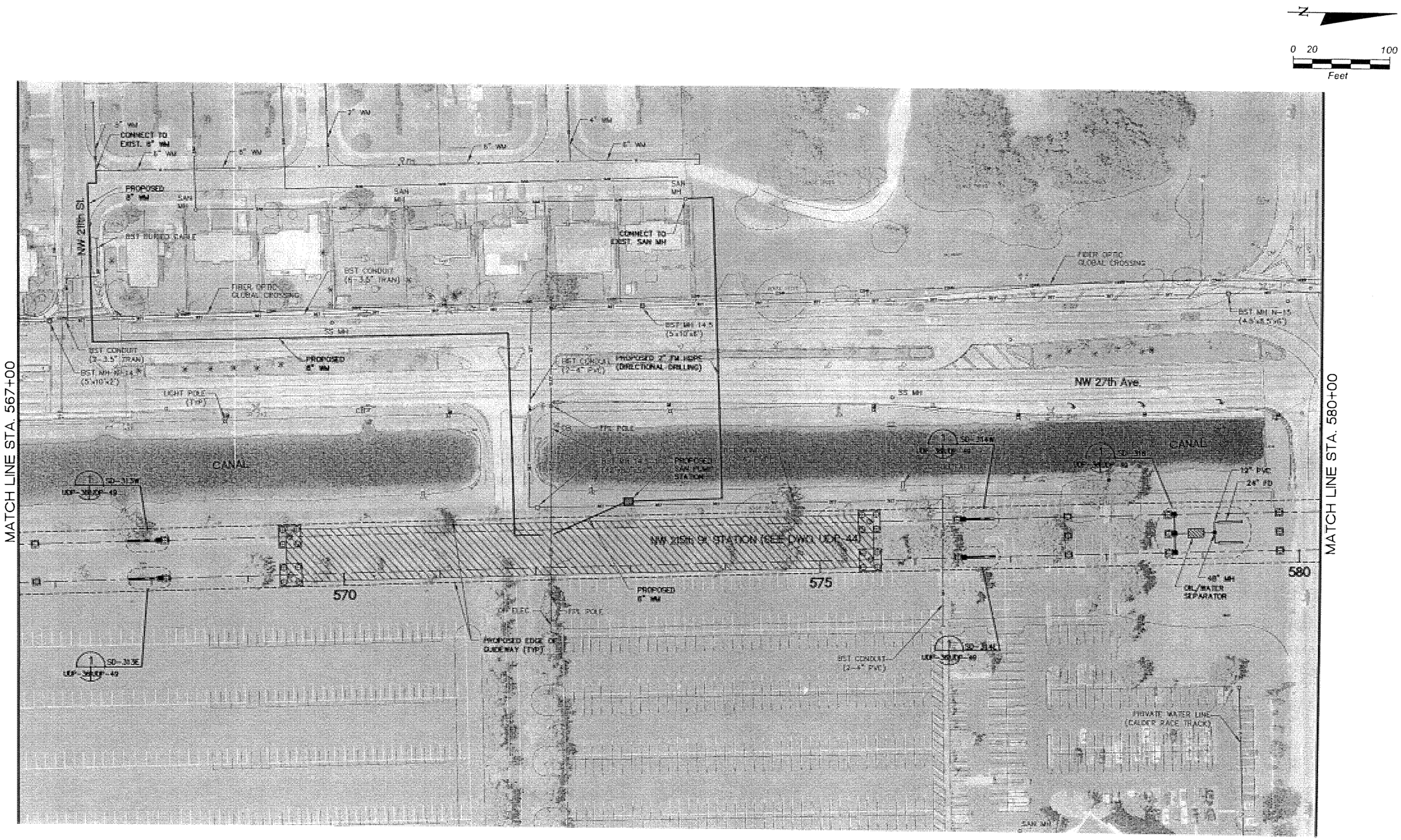

NOTE:
UTILITY LOCATIONS ARE BASED ON PRELIMINARY INFORMATION PROVIDED VIA THIRD PARTIES. LOCATIONS ARE APPROXIMATE AND NOT GUARANTEED.

VARIOUS	05-06					
Designed by	Date					
J.L.A./A.G.	05-06					
Drawn by	Date					
P.G./L.P./S.E.	05-06					
Checked by	Date					
S.E.	05-06	1	5/06	OA	SE	100% SUBMITTAL
Approved by	Date	No.	Date	By / Chk	App.	Revisions

NORTH CORRIDOR METRORAIL EXTENSION - PRELIMINARY ENGINEERING (100%) SUBMITTAL

MIAMI-DADE COUNTY

MIAMI-DADE TRANSIT

PARSONS
7600 CORPORATE CENTER DRIVE, SUITE 500
MIAMI, FLORIDA 33126
PHONE: (786) 464-1000 FAX: (786) 845-7119
CERTIFICATE OF AUTHORIZATION NO. 1838

Approved | Date

Nova Consulting, Inc.
10486 NW 31st Terrace, Miami, Florida, 33172
Florida Certification No. 7256

Approved | Date

UTILITY AND DRAINAGE PLANS

UTILITY RELOCATION AND DRAINAGE PLANS

Scale 1"=100' | Drawing UDP-36 | Sheet

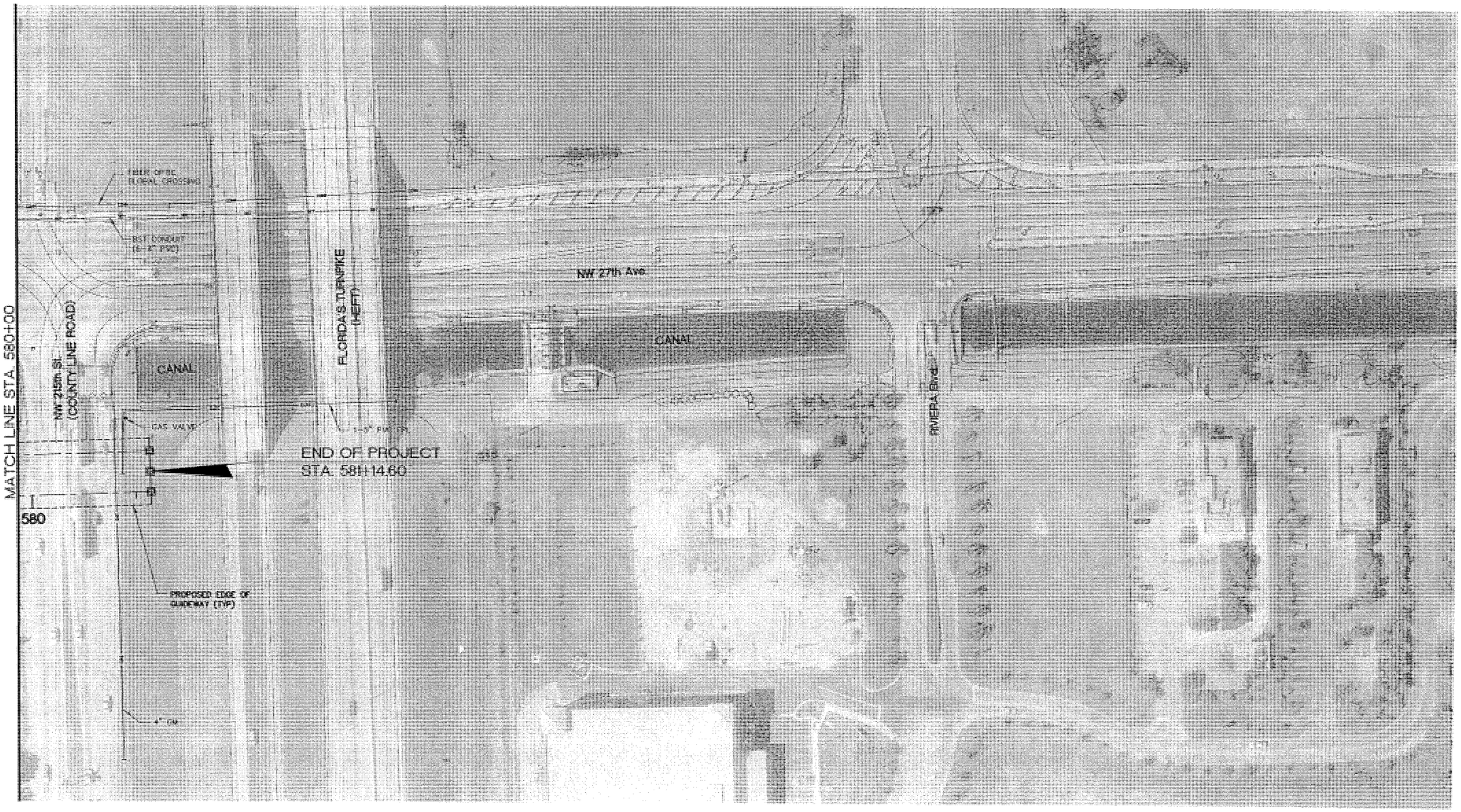

NOTE:
UTILITY LOCATIONS ARE BASED ON PRELIMINARY INFORMATION PROVIDED VIA THIRD PARTIES. LOCATIONS ARE APPROXIMATE AND NOT GUARANTEED.

VARIOUS	05-06					
Designed by	Date					
J.L.A./A.G.	05-06					
Drawn by	Date					
P.G./L.P./S.E.	05-06					
Checked by	Date					
S.E.	05-06	1	5/06	OA	SE	100% SUBMITTAL
Approved by	Date	No.	Date	By / Chk	App.	Revisions

NORTH CORRIDOR METRORAIL EXTENSION - PRELIMINARY ENGINEERING (100%) SUBMITTAL

MIAMI-DADE COUNTY

MIAMI-DADE TRANSIT

PARSONS
7600 CORPORATE CENTER DRIVE, SUITE 500
MIAMI, FLORIDA 33126
PHONE: (786) 464-1000 FAX: (786) 845-7119
CERTIFICATE OF AUTHORIZATION NO. 1838

Nova Consulting, Inc.
10486 NW 31st Terrace, Miami, Florida, 33172
Florida Certification No. 7256

Approved Date

Approved Date

UTILITY AND DRAINAGE PLANS

UTILITY RELOCATION AND DRAINAGE PLANS

Scale 1"=100' Drawing UDR-37 Sheet 1 of 1

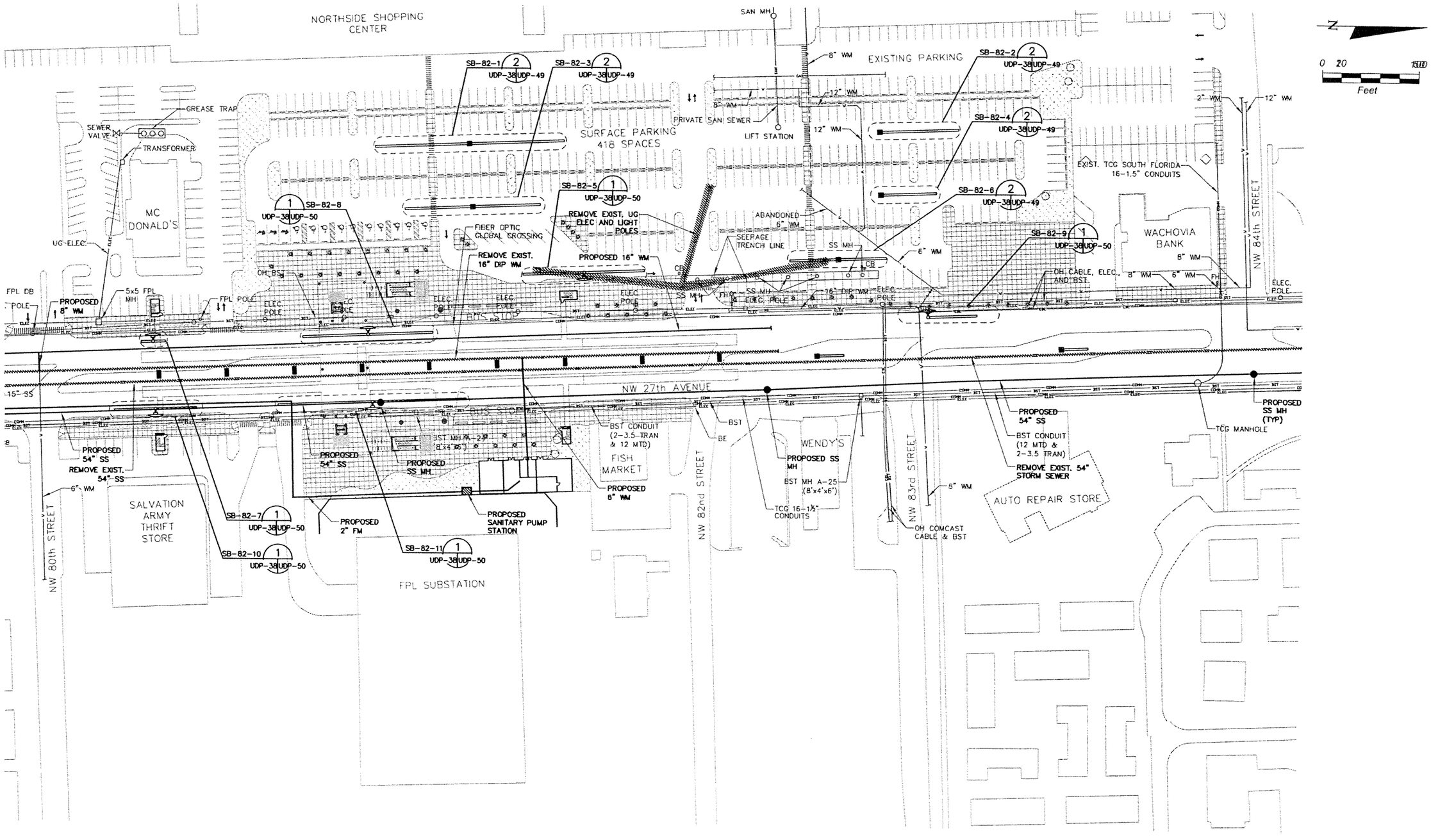

NOTE:
UTILITY LOCATIONS ARE BASED ON PRELIMINARY INFORMATION PROVIDED VIA THIRD PARTIES. LOCATIONS ARE APPROXIMATE AND NOT GUARANTEED.

VARIOUS Designed by	05-06 Date					
J.L.A./A.G. Drawn by	05-06 Date					
P.G./L.P./S.E. Checked by	05-06 Date					
S.E. Approved by	05-06 Date	1 No.	5/06 Date	OA by / Chk	SE App.	100% SUBMITTAL Revisions

NORTH CORRIDOR METRORAIL EXTENSION - PRELIMINARY ENGINEERING (100%) SUBMITTAL

UTILITY AND DRAINAGE PLANS

MIAMI-DADE COUNTY
MIAMI-DADE TRANSIT

PARSONS
7600 CORPORATE CENTER DRIVE, SUITE 500
MIAMI, FLORIDA 33126
PHONE: (786) 464-1000 FAX: (786) 845-7119
CERTIFICATE OF AUTHORIZATION NO. 1838

Approved Date

Nova Consulting, Inc.
10486 NW 31st Terrace, Miami, Florida, 33172
Florida Certification No. 7256

Approved Date

NW 82nd STREET STATION

Scale 1" = 100' Drawing Sheet

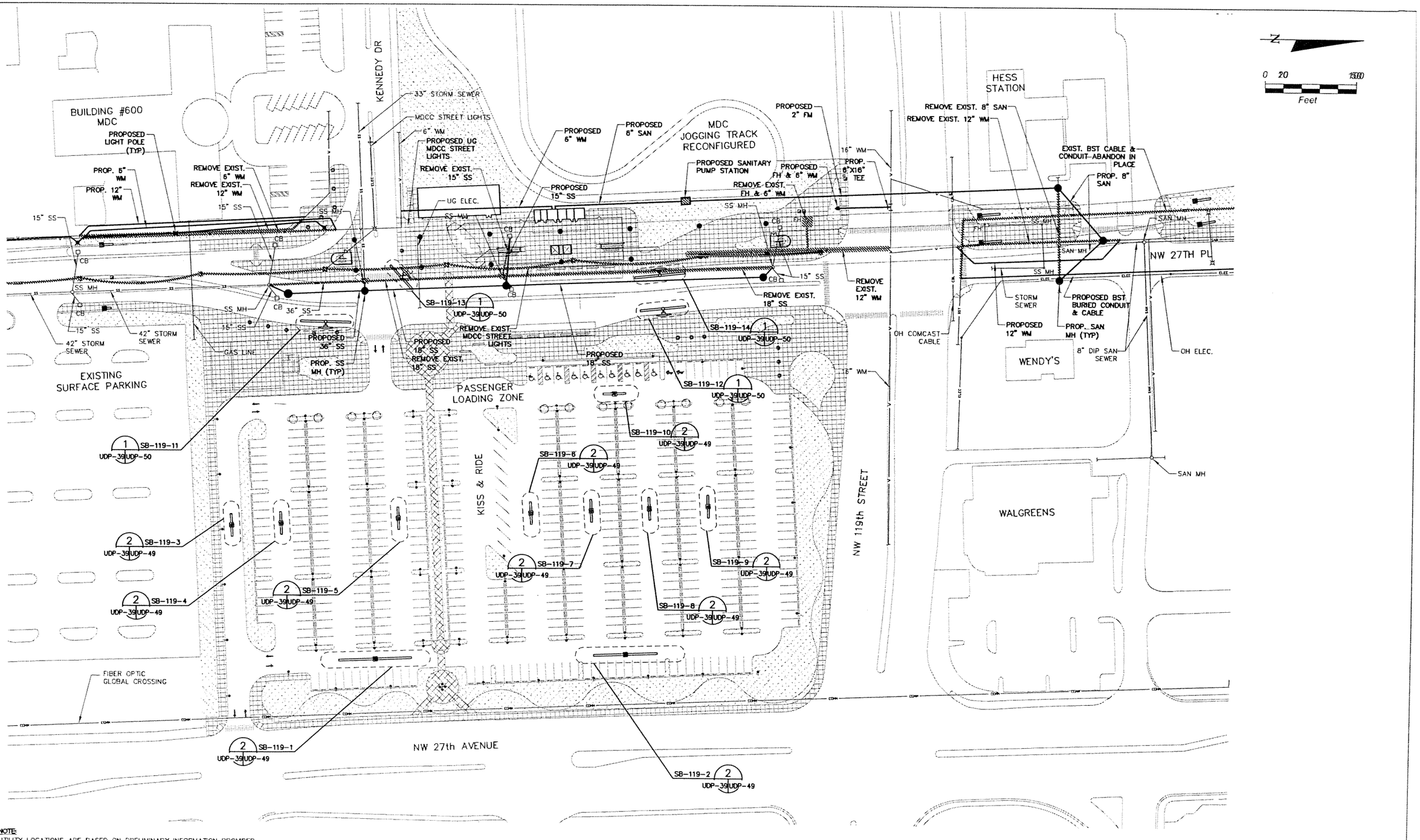

NOTE:
UTILITY LOCATIONS ARE BASED ON PRELIMINARY INFORMATION PROVIDED VIA THIRD PARTIES. LOCATIONS ARE APPROXIMATE AND NOT GUARANTEED.

VARIOUS	05-06					
Designed by	Date					
J.L.A./A.G.	05-06					
Drawn by	Date					
P.G./L.P./S.E.	05-06					
Checked by	Date					
S.E.	05-06	1	5/06	OA	SE	100% SUBMITTAL
Approved by	Date	No.	Date	By / Chk	App.	Revisions

NORTH CORRIDOR METRORAIL EXTENSION - PRELIMINARY ENGINEERING (100%) SUBMITTAL

MIAMI-DADE COUNTY
MIAMI-DADE TRANSIT

PARSONS
7600 CORPORATE CENTER DRIVE, SUITE 500
MIAMI, FLORIDA 33126
PHONE: (786) 464-1000 FAX: (786) 845-7119
CERTIFICATE OF AUTHORIZATION NO. 1838
Approved Date

Nova Consulting, Inc.
10486 NW 31st Terrace, Miami, Florida, 33172
Florida Certification No. 7256
Approved Date

UTILITY AND DRAINAGE PLANS

NW 119th STREET (MDCC) STATION

Scale 1"=100' Drawing UDP-39 Sheet

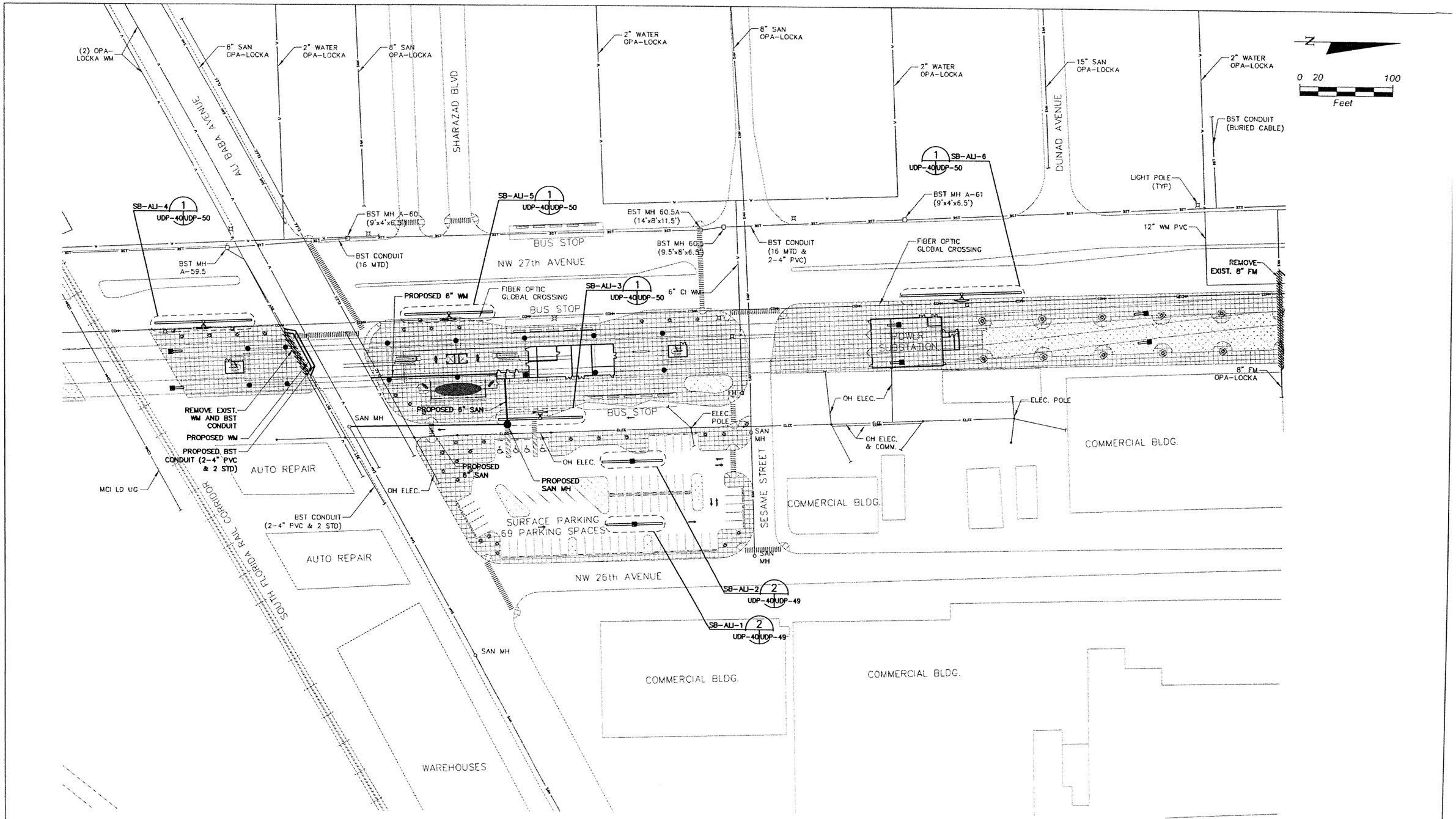

NOTE:
UTILITY LOCATIONS ARE BASED ON PRELIMINARY INFORMATION PROVIDED VIA THIRD PARTIES. LOCATIONS ARE APPROXIMATE AND NOT GUARANTEED.

VARIOUS	05-06					
Designed by	Date					
J.L.A./A.G.	05-06					
Drawn by	Date					
P.G./L.P./S.E.	05-06					
Checked by	Date					
S.E.	05-06	1	5/06	OA	SE	100% SUBMITTAL
Approved by	Date	No.	Date	By / Chk	App.	Revisions

NORTH CORRIDOR METRORAIL EXTENSION - PRELIMINARY ENGINEERING (100%) SUBMITTAL

MIAMI-DADE COUNTY

MIAMI-DADE TRANSIT

PARSONS
7600 CORPORATE CENTER DRIVE, SUITE 500
MIAMI, FLORIDA 33126
PHONE: (786) 464-1000 FAX: (786) 845-7119
CERTIFICATE OF AUTHORIZATION NO. 1838

Approved | Date

Nova Consulting, Inc.
10486 NW 31st Terrace, Miami, Florida, 33172
Florida Certification No. 7256

Approved | Date

UTILITY AND DRAINAGE PLANS

ALI BABA AVENUE STATION

Scale 1"=100' | Drawing | Sheet

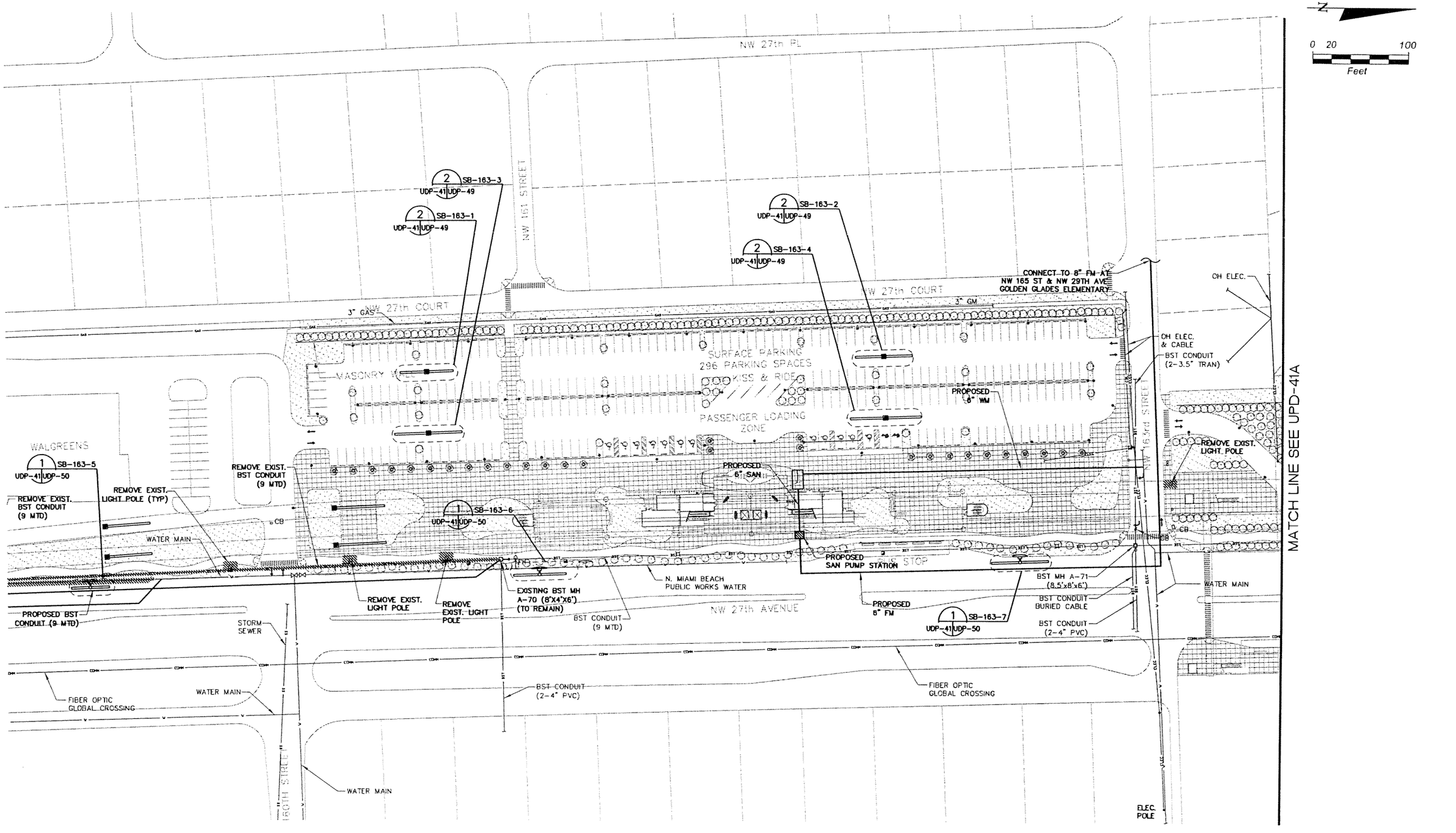

NOTE:
UTILITY LOCATIONS ARE BASED ON PRELIMINARY INFORMATION PROVIDED VIA THIRD PARTIES. LOCATIONS ARE APPROXIMATE AND NOT GUARANTEED.

VARIOUS Designed by	05-06 Date					
J.L.A./A.G. Drawn by	05-06 Date					
P.G./L.P./S.E. Checked by	05-06 Date					
S.E. Approved by	05-06 Date	1 No.	5/06 Date	OA By / Chk	SE App.	100% SUBMITTAL Revisions

NORTH CORRIDOR METRORAIL EXTENSION - PRELIMINARY ENGINEERING (100%) SUBMITTAL

MIAMI-DADE COUNTY
MIAMI-DADE TRANSIT

PARSONS
7600 CORPORATE CENTER DRIVE, SUITE 500
MIAMI, FLORIDA 33126
PHONE: (786) 464-1000 FAX: (786) 845-7119
CERTIFICATE OF AUTHORIZATION NO. 1838
Approved Date

Nova Consulting, Inc.
10486 NW 31st Terrace, Miami, Florida, 33172
Florida Certification No. 7256
Approved Date

UTILITY AND DRAINAGE PLANS

NW 163rd STREET STATION

Scale 1"=100' | Drawing UPD-41 | Sheet 40

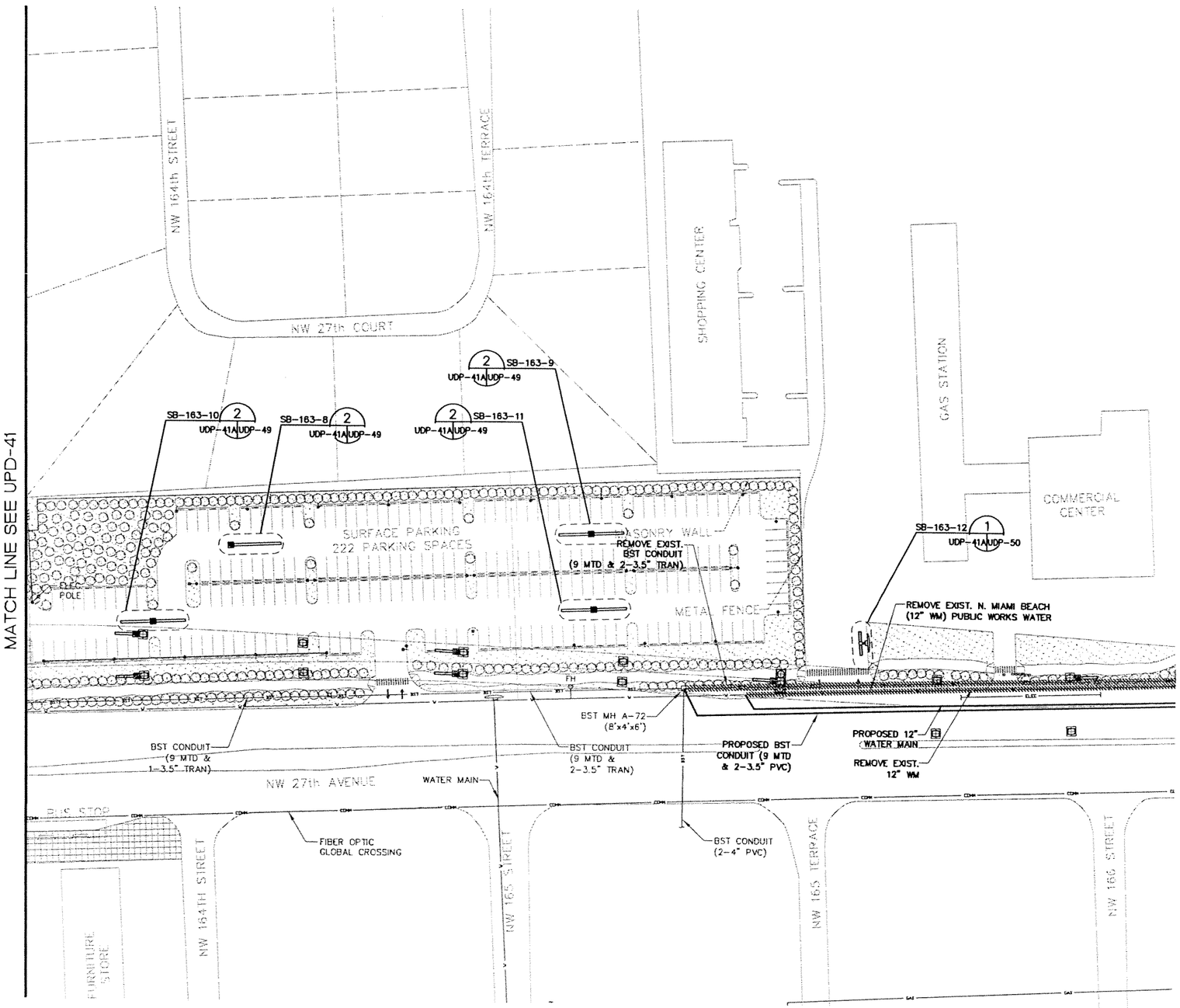

NOTE:
UTILITY LOCATIONS ARE BASED ON PRELIMINARY INFORMATION PROVIDED VIA THIRD PARTIES. LOCATIONS ARE APPROXIMATE AND NOT GUARANTEED.

VARIOUS	05-06					
Designed by	Date					
J.L.A./A.G.	05-06					
Drawn by	Date					
P.G./L.P./S.E.	05-06					
Checked by	Date					
S.E.	05-06	1	5/06	OA	SE	100% SUBMITTAL
Approved by	Date	No.	Date	By / Chk	App.	Revisions

NORTH CORRIDOR METRORAIL EXTENSION - PRELIMINARY ENGINEERING (100%) SUBMITTAL

MIAMI-DADE COUNTY

MIAMI-DADE TRANSIT

PARSONS
7600 CORPORATE CENTER DRIVE, SUITE 500
MIAMI, FLORIDA 33126
PHONE: (786) 464-1000 FAX: (786) 845-7119
CERTIFICATE OF AUTHORIZATION NO. 1638

Approved Date

Nova Consulting, Inc.
10486 NW 31st Terrace, Miami, Florida, 33172
Florida Certification No. 7256

Approved Date

UTILITY AND DRAINAGE PLANS

NW 163rd STREET STATION

Scale 1" = 100' Drawing Sheet

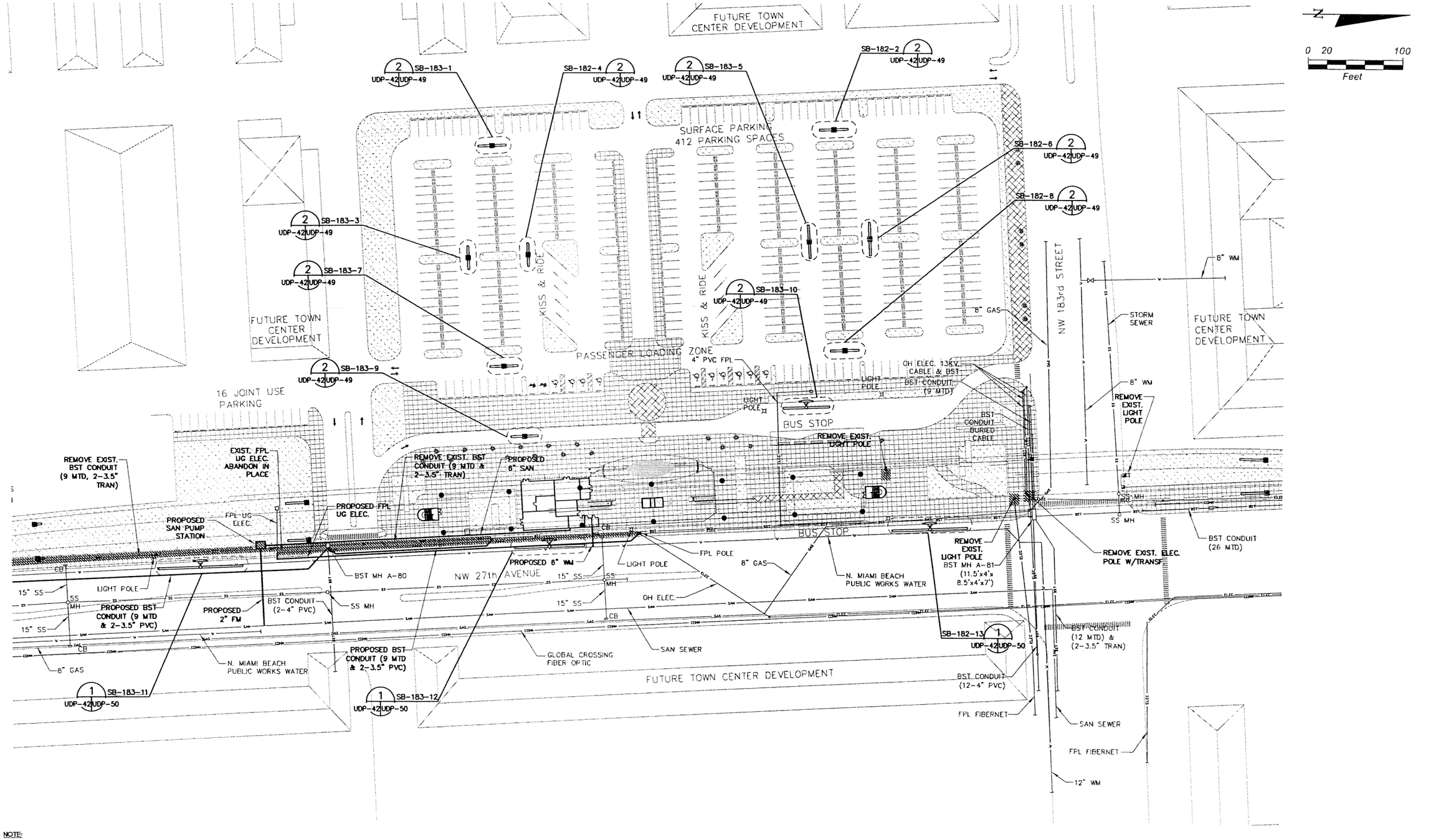

NOTE:
UTILITY LOCATIONS ARE BASED ON PRELIMINARY INFORMATION PROVIDED VIA THIRD PARTIES. LOCATIONS ARE APPROXIMATE AND NOT GUARANTEED.

VARIOUS	05-06					
Designed by	Date					
J.L.A./A.G.	05-06					
Drawn by	Date					
P.G./L.P./S.E.	05-06					
Checked by	Date					
S.E.	05-06	1	5/06	OA	SE	100% SUBMITTAL
Approved by	Date	No.	Date	By / Chk	App.	Revisions

NORTH CORRIDOR METRORAIL EXTENSION - PRELIMINARY ENGINEERING (100%) SUBMITTAL

MIAMI-DADE COUNTY
MIAMI-DADE TRANSIT

PARSONS
7600 CORPORATE CENTER DRIVE, SUITE 500
MIAMI, FLORIDA 33126
PHONE: (786) 464-1000 FAX: (786) 845-7119
CERTIFICATE OF AUTHORIZATION NO. 1838

Approved ____ Date ____

Nova Consulting, Inc.
10486 NW 31st Terrace, Miami, Florida, 33172
Florida Certification No. 7256

Approved ____ Date ____

UTILITY AND DRAINAGE PLANS

NW 183rd STREET STATION

Scale 1"=100' | Drawing UDP-42 | Sheet 42/57

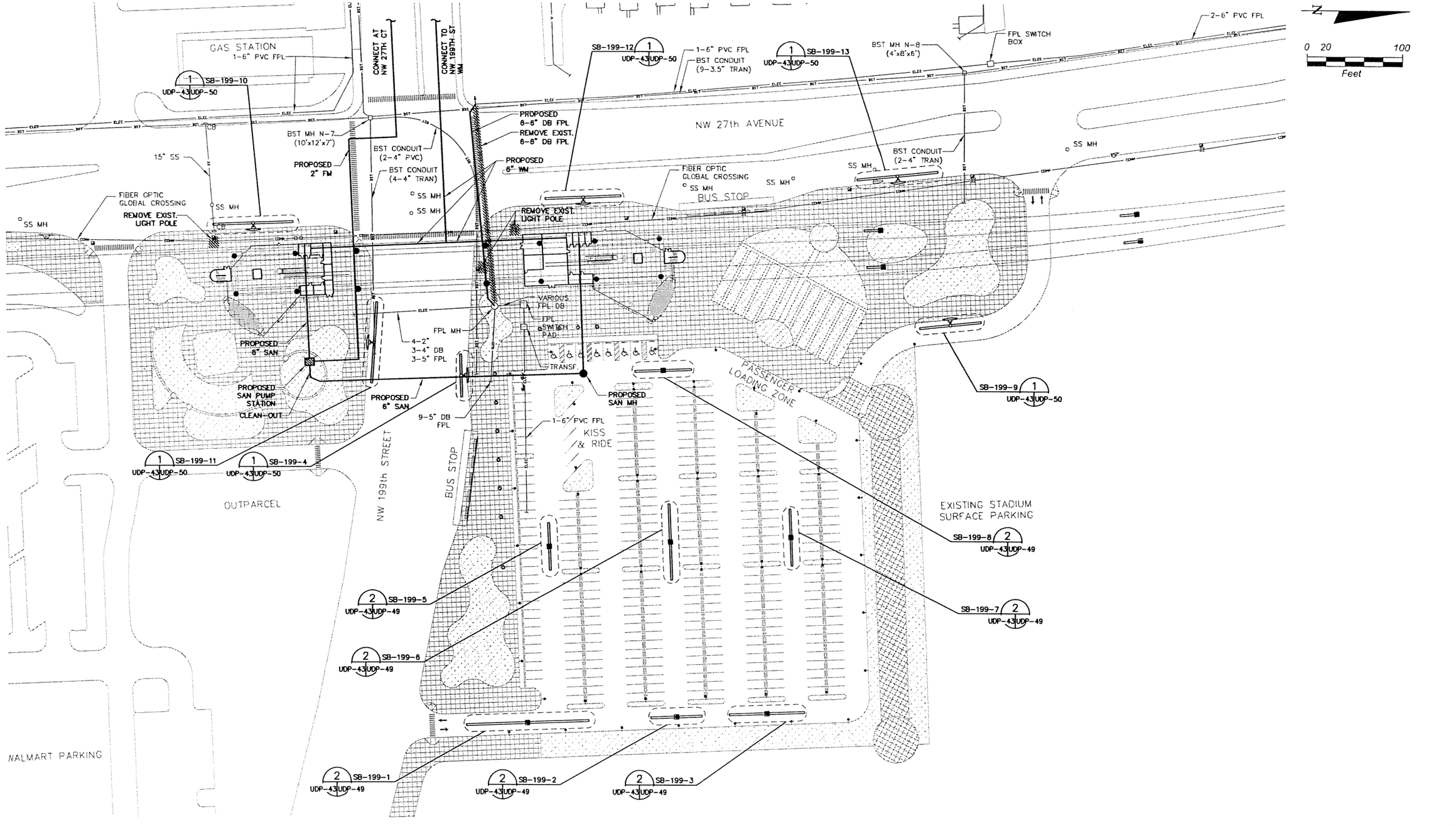

NOTE:
UTILITY LOCATIONS ARE BASED ON PRELIMINARY INFORMATION PROVIDED VIA THIRD PARTIES. LOCATIONS ARE APPROXIMATE AND NOT GUARANTEED.

VARIOUS	05-06					
Designed by	Date					
J.L.A./A.G.	05-06					
Drawn by	Date					
P.G./L.P./S.E.	05-06					
Checked by	Date					
S.E.	05-06	1	5/06	OA	SE	100% SUBMITTAL
Approved by	Date	No.	Date	By / Chk	App.	Revisions

NORTH CORRIDOR METRORAIL EXTENSION - PRELIMINARY ENGINEERING (100%) SUBMITTAL

MIAMI-DADE COUNTY
MIAMI-DADE TRANSIT

PARSONS
7600 CORPORATE CENTER DRIVE, SUITE 500
MIAMI, FLORIDA 33126
PHONE: (786) 464-1000 FAX: (786) 845-7119
CERTIFICATE OF AUTHORIZATION NO. 1838
Approved Date

Nova Consulting, Inc.
10486 NW 31st Terrace, Miami, Florida, 33172
Florida Certification No. 7256
Approved Date

UTILITY AND DRAINAGE PLANS

NW 199th STREET STATION

Scale 1"=100' | Drawing UDP-43 | Sheet 201

MATCH LINE SEE DWG. UDP-45

N

0 20 100

Feet

8" WM
CONNECT TO EXIST. 8" WM
6" WM
6" WM
2" WM
6" WM
4" WM
6" WM
R.F.H.
PROPOSED 8" WM
NW 27th COURT
SAN MH
SAN MH
SAN MH
CONNECT TO EXIST. SAN MH
BST BURIED CABLE
FIBER OPTIC GLOBAL CROSSING
BST CONDUIT (6-3.5" TRAN)
SS MH
BST MH 14.5 (5'x10'x6')
BST CONDUIT (2-3.5" TRAN)
BST MH N-14 (5'x10'x2')
PROPOSED 6" WM
BST CONDUIT (2-4" PVC)
PROPOSED 2" FM HDPE (DIRECTIONAL DRILLING)
LIGHT POLE (TYP)
CB
FPL POLE
OH ELEC.
BST MH 14.5-1 (42"x60"x52")
PROPOSED SAN PUMP STATION
BST CONDUIT (2-4" PVC)
EXISTING CANAL
20" OUTFALL
12" PVC
24" FD
PROPOSED 6" WM
BUS STOP
BUS STOP
PASSENGER LOADING ZONE
BUS STOP
KISS & RIDE
48" MH OIL/WATER SEPARATOR
BST CONDUIT (2-4" PVC)
NW 27th AVENUE
SS MH
FIBER OPTIC GLOBAL CROSSING
FLORIDA'S TURNPIKE EXIT RAMP
BST MH N-15 (4.5'x8.5'x6')
FIBER OPTIC GLOBAL CROSSING
BST CONDUIT (6-4" PVC)
GAS VALVE
NW 215th STREET
4" GM
PRIVATE WATER LINE (CALDER RACE TRACK)
SAN MH
FH
PRIVATE WATER LINE AND FH (CALDER RACE TRACK)

SB-215-1 1 UDP-44/UDP-50
SB-215-2 1 UDP-44/UDP-50
SB-215-3 1 UDP-44/UDP-50
SB-215-4 1 UDP-44/UDP-50
SB-215-5 1 UDP-44/UDP-50
SB-215-6 1 UDP-44/UDP-50
SB-215-7 2 UDP-44/UDP-49
SB-215-8 2 UDP-44/UDP-49
SB-215-9 2 UDP-44/UDP-49
SB-215-10 2 UDP-44/UDP-49

NOTE:
UTILITY LOCATIONS ARE BASED ON PRELIMINARY INFORMATION PROVIDED VIA THIRD PARTIES. LOCATIONS ARE APPROXIMATE AND NOT GUARANTEED.

VARIOUS	05-06					
Designed by	Date					
J.L.A./A.G.	05-06					
Drawn by	Date					
P.G./L.P./S.E.	05-06					
Checked by	Date					
S.E.	05-06					
Approved by	Date	1	5/06	OA	SE	100% SUBMITTAL
		No.	Date	By / Chk	App.	Revisions

NORTH CORRIDOR METRORAIL EXTENSION - PRELIMINARY ENGINEERING (100%) SUBMITTAL

UTILITY AND DRAINAGE PLANS

MIAMI-DADE COUNTY

MIAMI-DADE TRANSIT

PARSONS
7600 CORPORATE CENTER DRIVE, SUITE 500
MIAMI, FLORIDA 33126
PHONE: (786) 464-1000 FAX: (786) 845-7119
CERTIFICATE OF AUTHORIZATION NO. 1838

Approved | Date

Nova Consulting, Inc.
10486 NW 31st Terrace, Miami, Florida, 33172
Florida Certification No. 7256

Approved | Date

NW 215th STREET STATION

Scale 1"=100' | Drawing UDP-44 | Sheet 207

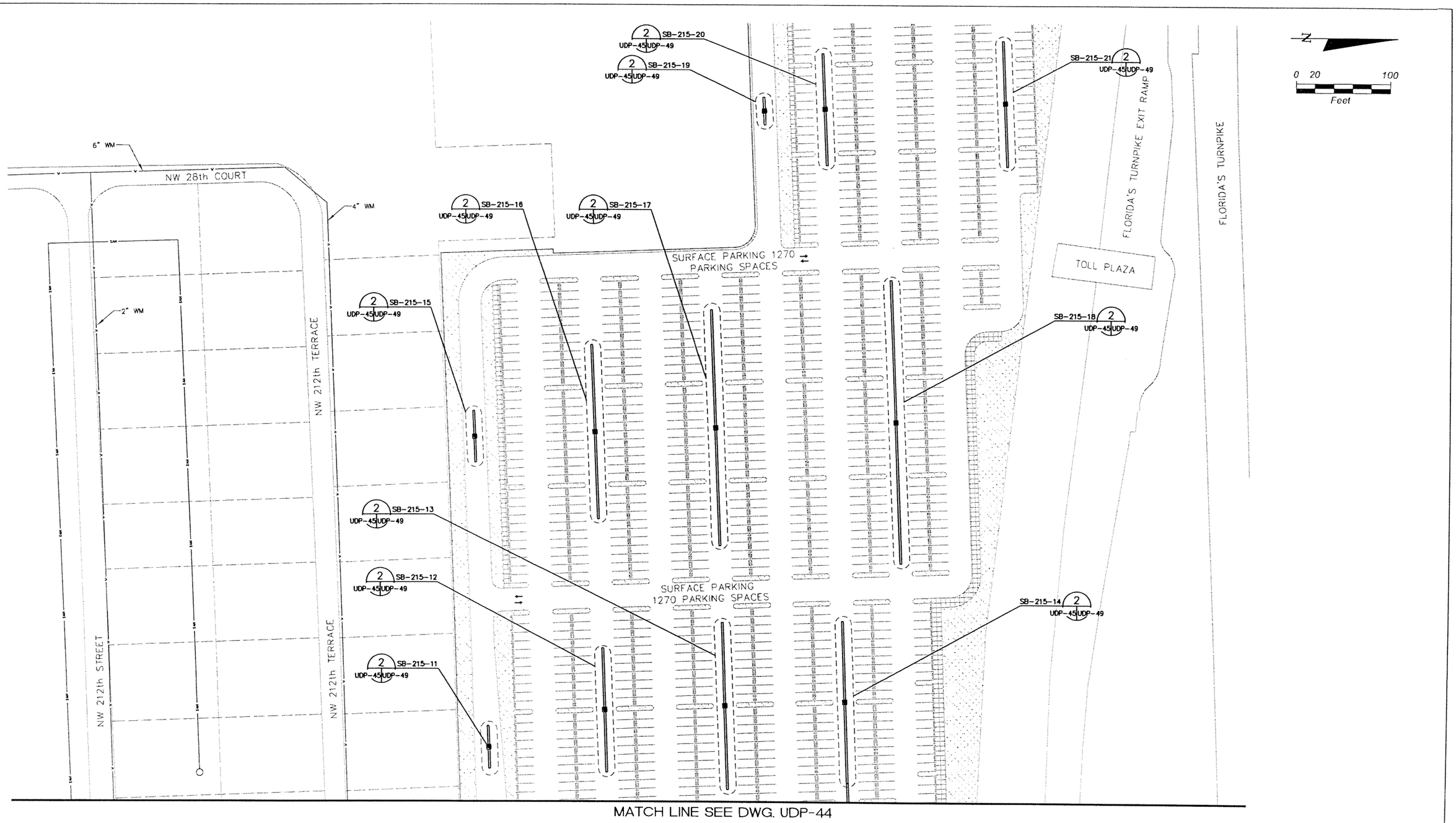

NOTE:
UTILITY LOCATIONS ARE BASED ON PRELIMINARY INFORMATION PROVIDED VIA THIRD PARTIES. LOCATIONS ARE APPROXIMATE AND NOT GUARANTEED.

VARIOUS	05-06					
Designed by	Date					
J.L.A./A.G.	05-06					
Drawn by	Date					
P.G./L.P./S.E.	05-06					
Checked by	Date					
S.E.	05-06	1	5/06	OA	SE	100% SUBMITTAL
Approved by	Date	No.	Date	By / Chk	App.	Revisions

NORTH CORRIDOR METRORAIL EXTENSION - PRELIMINARY ENGINEERING (100%) SUBMITTAL

UTILITY AND DRAINAGE PLANS

MIAMI-DADE COUNTY

MIAMI-DADE TRANSIT

PARSONS
7600 CORPORATE CENTER DRIVE, SUITE 500
MIAMI, FLORIDA 33126
PHONE: (786) 464-1000 FAX: (786) 845-7119
CERTIFICATE OF AUTHORIZATION NO. 1838

Approved | Date

Nova Consulting, Inc.
10486 NW 31st Terrace, Miami, Florida, 33172
Florida Certification No. 7256

Approved | Date

NW 215th STREET STATION

Scale 1"=100' | Drawing UDP-45 | Sheet 2 OF 3

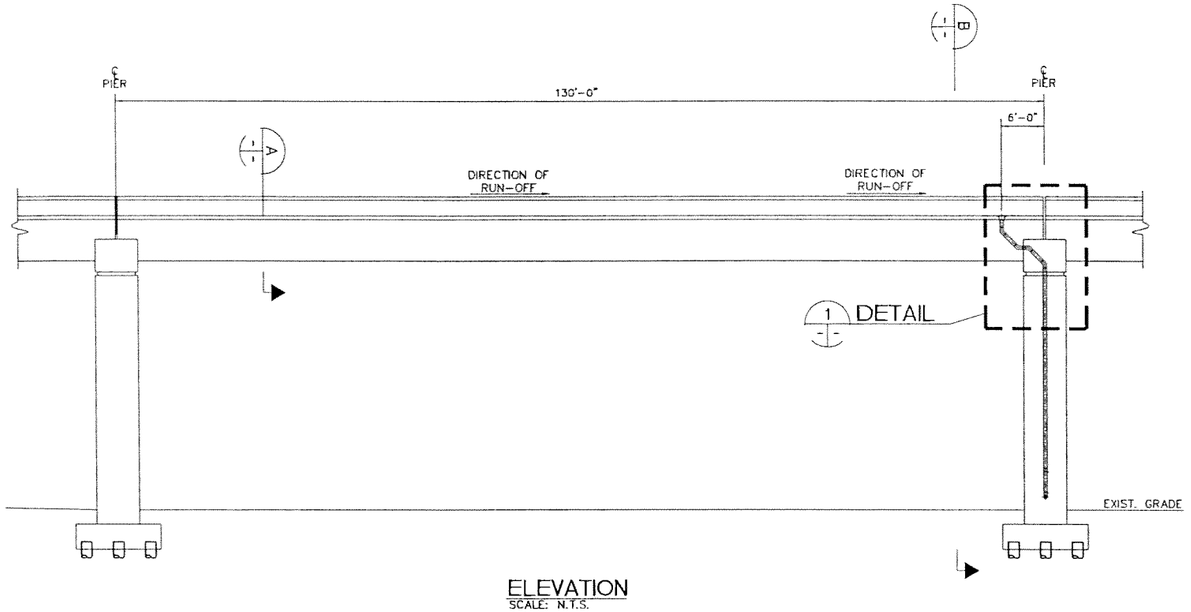

ELEVATION
SCALE: N.T.S.

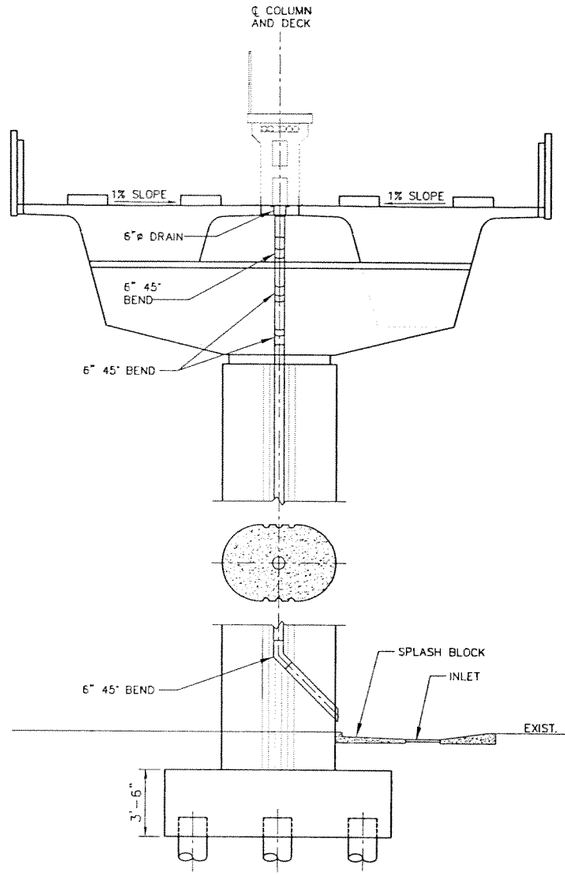

B SECTION
SCALE: N.T.S.

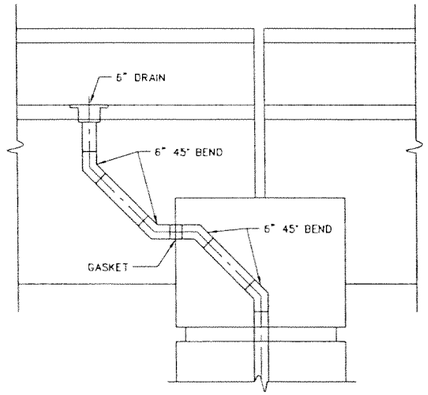

1 DETAIL
SCALE: N.T.S.

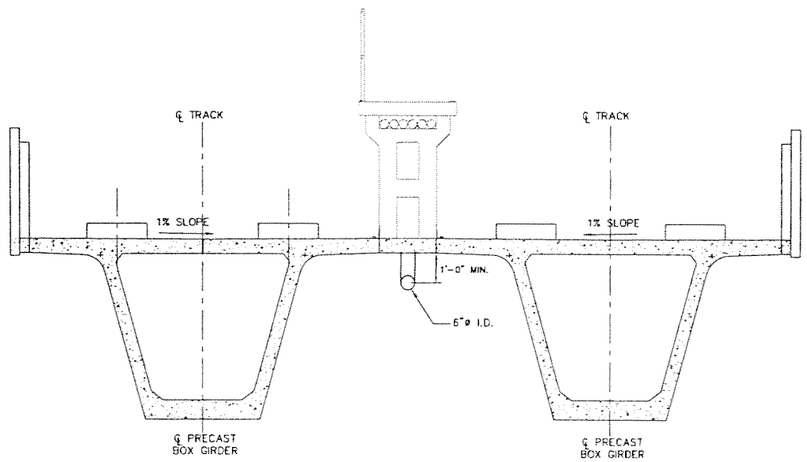

A SECTION
SCALE: N.T.S.

VARIOUS 05-06 Designed by Date					
J.L.A./A.G. 05-06 Drawn by Date					
P.G./L.P./S.E.05-06 Checked by Date					
05-06 05-06 Approved by Date	1	5/06	OA	SE	100% SUBMITTAL
	No.	Date	By / Chk	App.	Revisions

NORTH CORRIDOR METRORAIL EXTENSION - PRELIMINAR ENGINEERING (100%) SUBMITTAL

MIAMI-DADE COUNTY
MIAMI-DADE TRANSIT

PARSONS
7600 CORPORATE CENTER DRIVE, SUITE 500
MIAMI, FLORIDA 33126
PHONE: (786) 464-1000 FAX: (786) 845-7119
CERTIFICATE OF AUTHORIZATION NO. 1836

Approved Date

Nova Consulting, Inc.
10486 NW 31st Terrace, Miami, Florida, 33172
Florida Certification No. 7256

Approved Date

UTILITY AND DRAINAGE PLANS

UTILITY AND DRAINAGE DETAILS

Scale N.T.S. | Drawing UDP-46 | Sheet

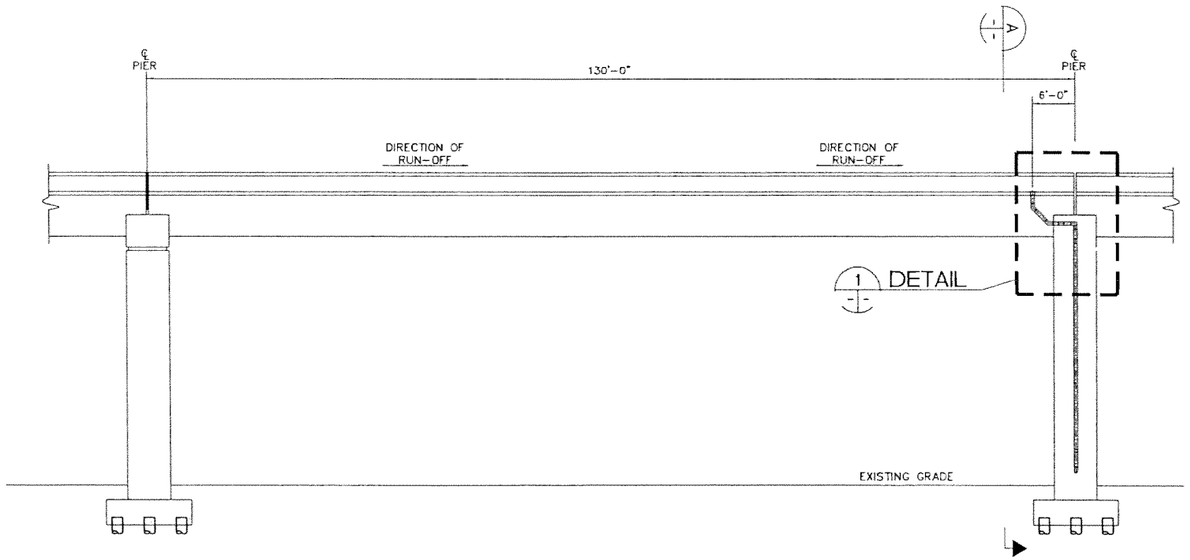

ELEVATION
SCALE: N.T.S.

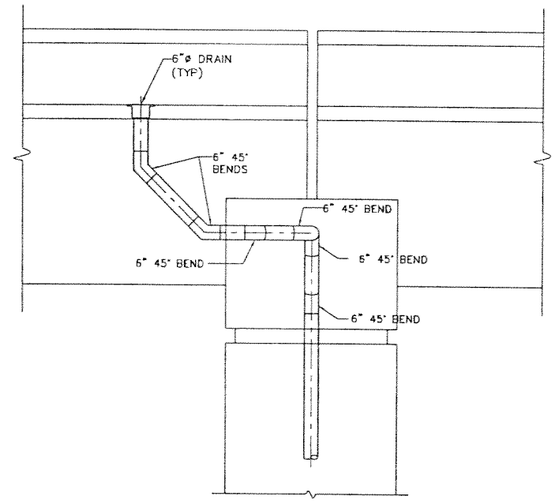

1 DETAIL
SCALE: N.T.S.

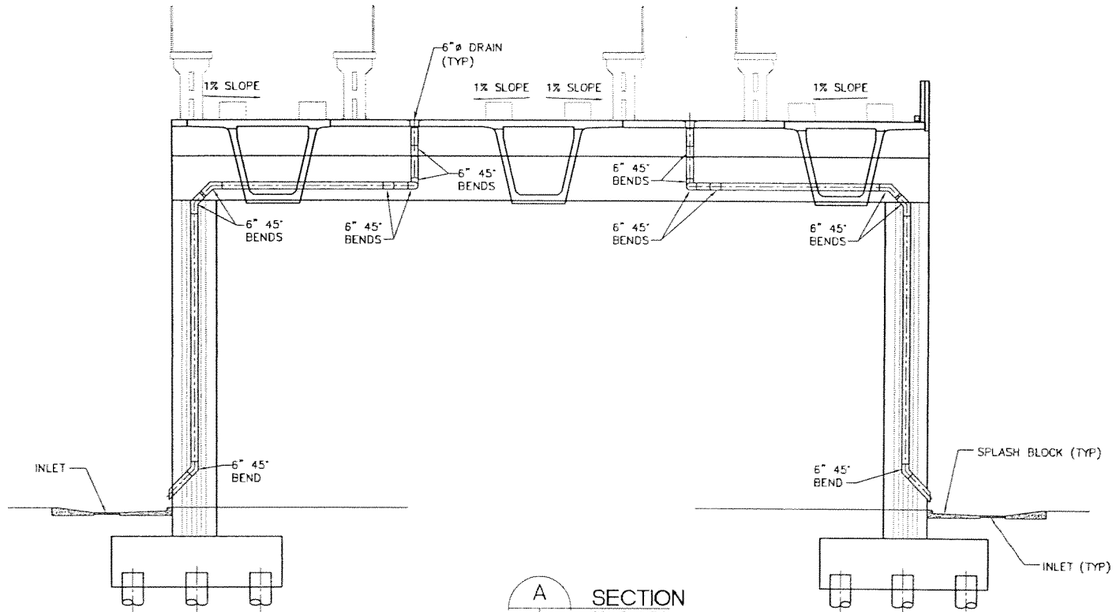

A SECTION
SCALE: N.T.S.

VARIOUS 05-06 Designed by Date						
J.L.A./A.G. 05-06 Drawn by Date						
P.G./L.P. 05-06 Checked by Date						
S.E. 05-06 Approved by Date	1	5/06	OA	SE	100% SUBMITTAL	
	No.	Date	By / Chk	App.	Revisions	

NORTH CORRIDOR METRORAIL EXTENSION - PRELIMINAR ENGINEERING (100%) SUBMITTAL

MIAMI-DADE COUNTY
MIAMI-DADE TRANSIT

PARSONS
7600 CORPORATE CENTER DRIVE, SUITE 500
MIAMI, FLORIDA 33126
PHONE: (786) 464-1000 FAX: (786) 845-7119
CERTIFICATE OF AUTHORIZATION NO. 1838
Approved Date

Nova Consulting, Inc.
10486 NW 31st Terrace, Miami, Florida, 33172
Florida Certification No. 7256
Approved Date

UTILITY AND DRAINAGE PLANS

UTILITY AND DRAINAGE DETAILS

Scale N.T.S. | Drawing UDP-47 | Sheet 205

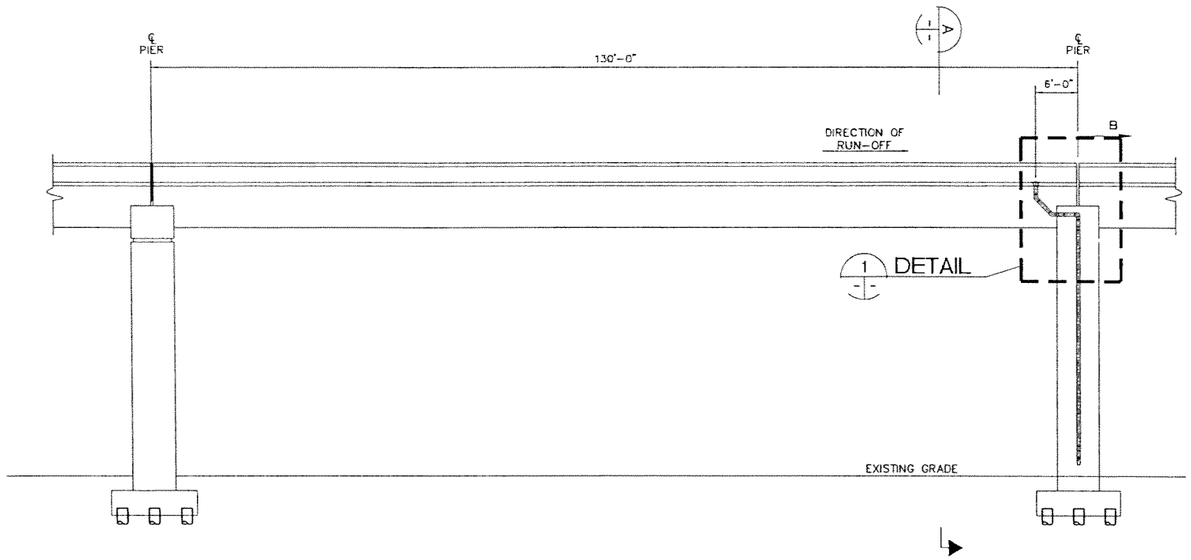

ELEVATION
SCALE: N.T.S.

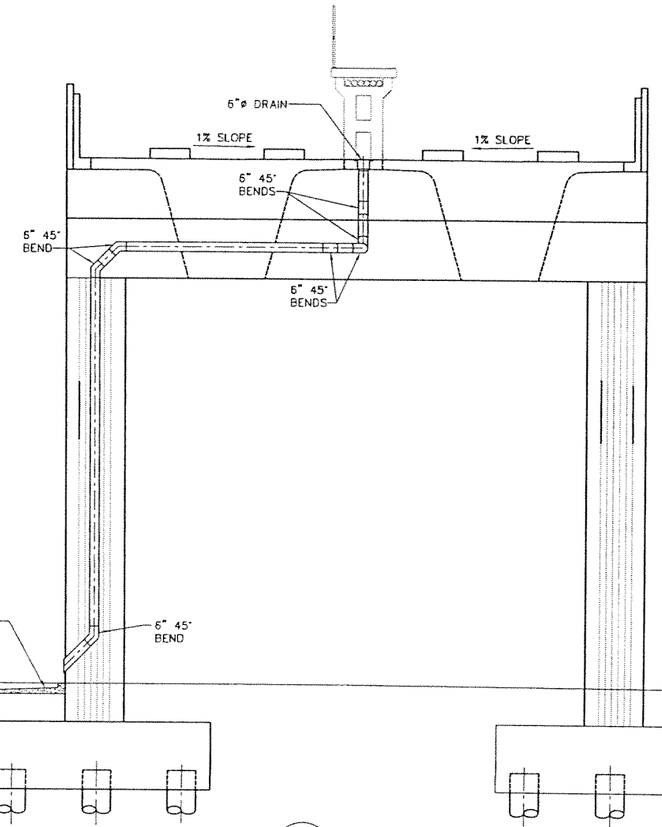

A SECTION
SCALE: N.T.S.

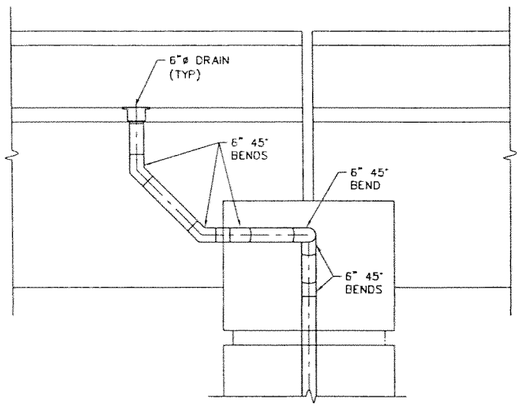

1 DETAIL
SCALE: N.T.S.

VARIOS 05-06 Designed by Date					
J.L.A./A.G. 05-06 Drawn by Date					
P.G./L.P. 05-06 Checked by Date					
S.E. 05-06 Approved by Date	1	5/06	OA	SE	100% SUBMITTAL
	No.	Date	By / Chk	App.	Revisions

NORTH CORRIDOR METRORAIL EXTENSION - PRELIMINAR ENGINEERING (100%) SUBMITTAL

MIAMI-DADE COUNTY
MIAMI-DADE TRANSIT

PARSONS
7600 CORPORATE CENTER DRIVE, SUITE 500
MIAMI, FLORIDA 33126
PHONE: (786) 464-1000 FAX: (786) 845-7119
CERTIFICATE OF AUTHORIZATION NO. 1838

Approved Date

Nova Consulting, Inc.
10486 NW 31st Terrace, Miami, Florida, 33172
Florida Certification No. 7256

Approved Date

UTILITY AND DRAINAGE PLANS

UTILITY AND DRAINAGE DETAILS

Scale N.T.S. | Drawing UDP-4B | Sheet 20

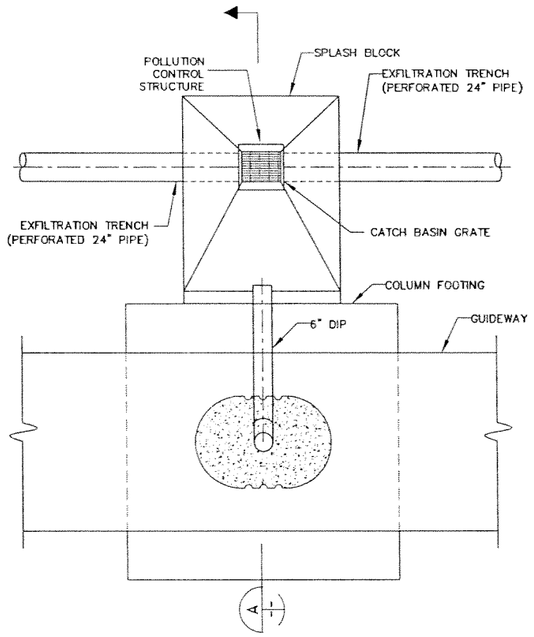

1 PIER CATCH BASIN DETAIL
SCALE: N.T.S.

UDP-01 TO UDP-36 | 49

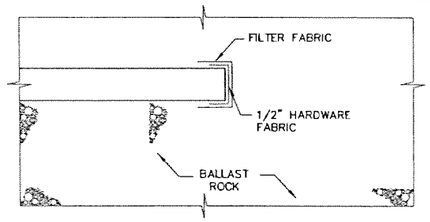

NOTE: SECURE 1/2" HARDWARE FABRIC OVER END OF PIPE USING BANDING AND WRAP END WITH FILTER FABRIC, SECURE USING PLASTIC WIRE TIES.

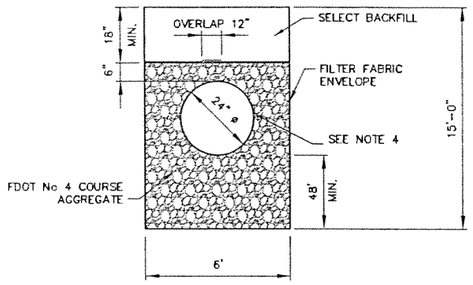

CROSS SECTION

NOTES:

1. PLASTIC FILTER FABRIC (AT EA. SIDE, TOP AND BOTTOM) SHALL BE USED IN ALL AREAS.
2. THE BOTTOM OF THE EXFILTRATION TRENCH SHALL BE AS SHOWN UNLESS FIELD CONDITIONS WARRANT OTHERWISE.
3. AFTER THE BALLAST ROCK HAS BEEN PLACED TO THE PROPER ELEVATION, IT SHALL BE CAREFULLY WASHED DOWN WITH CLEAN WATER IN ORDER TO ALLOW INITIAL SETTLEMENT THAT MAY OCURR. IF SETTLEMENT OCCURS, PLACE ADDITIONAL BALLAST ROCK TO RESTORE THE BALLAST ROCK TO THE PROPER ELEVATION, SO THAT EXFILTRATION TRENCH CAN BE COMPLETED IN ACCORDANCE WITH THE DETAILS.
4. POLLUTION RETARDANT BAFFLES SHALL BE PROVIDED IN EVERY DRAINAGE STRUCTURE WHERE IT IS DIRECTLY CONNECTED TO THE FRENCH DRAIN/EXFILTRATION TRENCH.

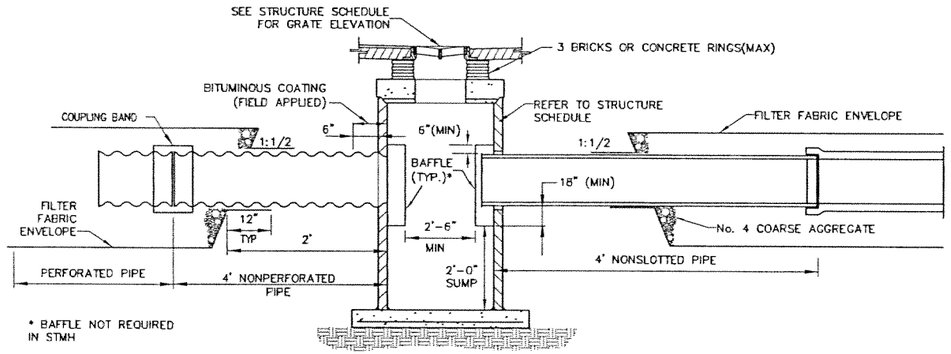

LONGITUDINAL SECTION

2 EXFILTARTION TRENCH SYSTEM
SCALE: N.T.S.

UDP-38 TO UDP-45 | 49

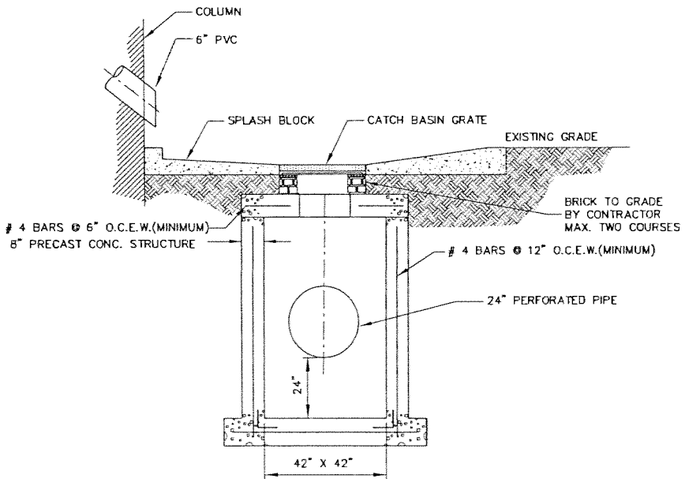

A SECTION
SCALE: N.T.S.

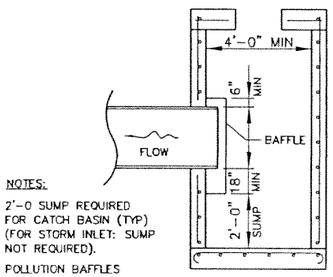

NOTES:

2'-0 SUMP REQUIRED FOR CATCH BASIN (TYP) (FOR STORM INLET: SUMP NOT REQUIRED).

POLLUTION BAFFLES REQUIRED WHERE INDICATED ON PLANS.

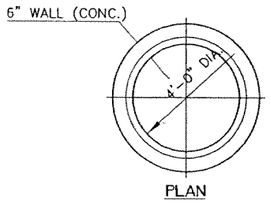

PLAN

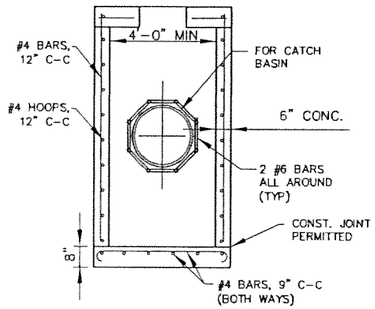

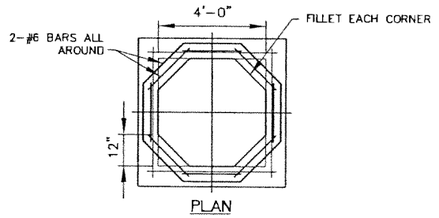

PLAN

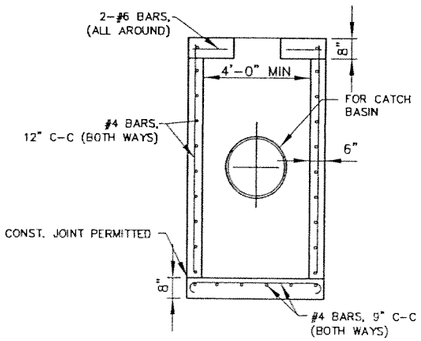

3 CATCH BASIN SLAB REINFORCEMENT PLAN
SCALE N.T.S.

VARIOUS 05-06 Designed by Date					
J.L.A./A.G. 05-06 Drawn by Date					
P.G./L.P. 05-06 Checked by Date					
S.E. 05-06 Approved by Date	1	5/06	OA	SE	100% SUBMITTAL
	No.	Date	By / Chk	App.	Revisions

NORTH CORRIDOR METRORAIL EXTENSION - PRELIMINAR ENGINEERING (100%) SUBMITTAL

MIAMI-DADE COUNTY

MIAMI-DADE TRANSIT

PARSONS
7600 CORPORATE CENTER DRIVE, SUITE 500
MIAMI, FLORIDA 33126
PHONE: (786) 464-1000 FAX: (786) 845-7119
CERTIFICATE OF AUTHORIZATION NO. 1838

Approved | Date

Nova Consulting, Inc.
10486 NW 31st Terrace, Miami, Florida, 33172
Florida Certification No. 7256

Approved | Date

UTILITY AND DRAINAGE PLANS

UTILITY AND DRAINAGE DETAILS

Scale N.T.S. | Drawing UDP-49 | Sheet 207

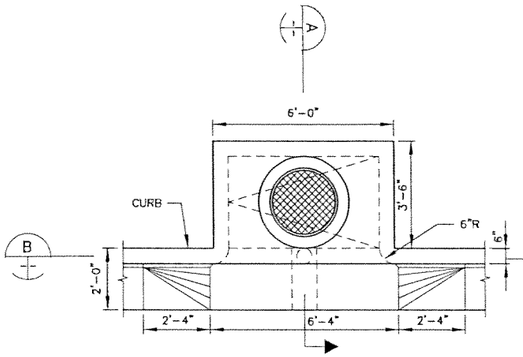

CURB INLET PLAN (2)
SCALE N.T.S.

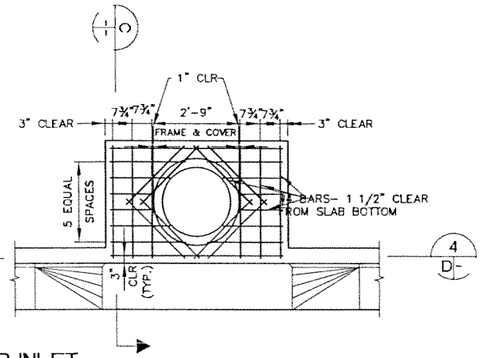

CURB INLET
SLAB REINFORCEMENT PLAN (3)
SCALE N.T.S.

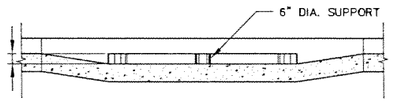

SECTION (B)
SCALE N.T.S.

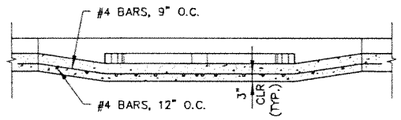

SECTION (D)
SCALE N.T.S.

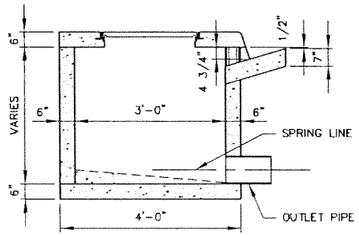

SECTION (A)
SCALE N.T.S.

NOTES:

1. ALIGN TOP SLAB, CURB, AND GUTTER WITH THE ADJACENT SIDEWALK, CURB, AND GUTTER.
2. SLOPE INLET BOTTOM FROM PIPE SPRING LINE TO INVERT – AS SHOWN.
3. OUTLET PIPE MAY BE RELOCATED.

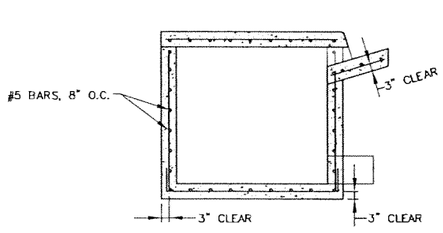

SECTION (C)
SCALE N.T.S.

NOTES:

1. REINFORCING CONTINUOUS AT CORNERS WITH ALL LAPS 1'-3" .

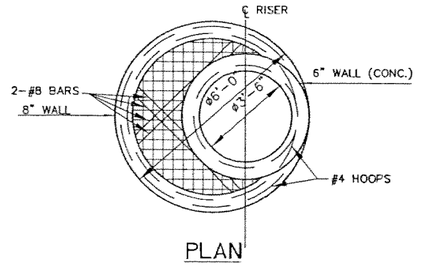

PLAN

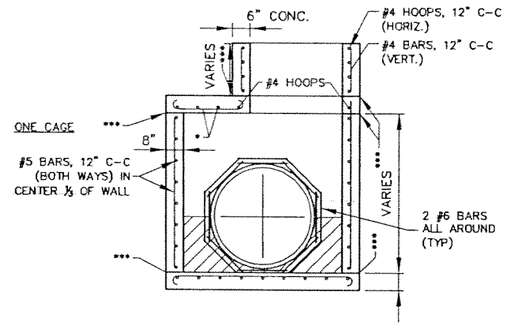

SECTION

ALTERNATE "A"

GENERAL NOTES

1. ALL STRUCTURES SHALL BE CONSTRUCTED OF CONCRETE ONLY. THE CONCRETE MAY BE CAST-IN-PLACE OR PRECAST.
2. WALL REINFORCEMENT AND THICKNESS ARE FOR EITHER CAST-IN-PLACE OR PRECAST CONCRETE EXCEPT THAT FOR PRECAST CIRCULAR UNITS ASTM SPECIFICATION C-76, TABLE III, FOR B WALL REINFORCED CONCRETE PIPE OR PRECAST CIRCULAR UNITS IN ACCORDANCE WITH ASTM SPECIFICATION REINFORCEMENT ARE FOR ALL TYPES OF CONSTRUCTION.
3. PRECAST TOP AND/OR FLOOR SLABS MAY BE OF THE SAME CONCRETE AS SPECIFIED IN ASTM SPECIFICATIONS C-478 FOR PRECAST CIRCULAR UNITS.
4. SMOOTH FLOW CHANNELS COMPOSED OF CONCRETE, OR BRICK AND MORTAR, SHALL BE CONSTRUCTED IN THE BOTTOMS OF ALL STRUCTURES TO A DEPTH EQUAL TO HALF THE DIAMETER OF THE LARGEST PIPE.
5. CORNER FILLETS SHOWN FOR RECTANGULAR STRUCTURES ARE NECESSARY ONLY WHEN STRUCTURES ARE USED IN CONJUNCTION WITH CIRCULAR TOPS.
6. STRUCTURES SHALL BE SECURED TO INLET THROATS, RISERS OR MANHOLE TOPS WITH A MINIMUM OF 6-NO 4 BARS 12" LONG, OR AS SHOWN ON SHEET 2.
7. ANY INLET, MANHOLE OR JUNCTION BOX MAY BE USED IN CONJUNCTION WITH ANY INLET THROAT OR MANHOLE TOP.
8. MORTAR USED TO SEAL THE PIPE IN WALLS OF THE PRECAST UNITS SHALL BE OF SUCH A MIX THAT SHRINKAGE WILL NOT CAUSE LEAKAGE INTO OR OUT OF THE UNITS MAXIMUM OPENING FOR PIPE SHALL BE MAX. REQUIRED O.D. + 6".
9. CONCRETE PROTECTION FOR REINFORCEMENT IN CAST-IN-PLACE OR PRECAST CONCRETE SHALL BE IN ACCORDANCE WITH CHAPTER 7, "BUILDING CODE REQUIREMENTS FOR REINFORCED CONCRETE (ACI 318-71)".

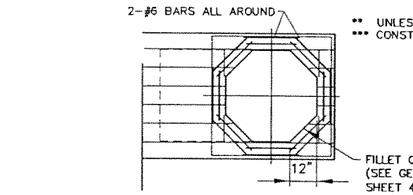

PLAN

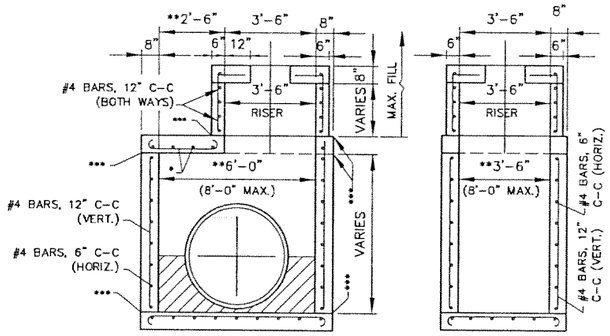

SECTION ELEVATION

ALTERNATE "B" AND "C"

FRAME AND GATE/COVER

CATCH BASIN: US FOUNDRY No. 4700 HINGED FRAME WITH 6223 GRATE, OR APPROVED EQUAL

CATCH BASIN (SWALE) INLET: U.S. FOUNDRY No. 6646 GRATE, OR APPROVED EQUAL

STORM MANHOLE: US FOUNDRY No. 385 TYPE W-HEAVY DUTY OR APPROVED EQUAL

CURB INLET: US FOUNDRY No. 1190 TYPE K-LIGHT DUTY OR APPROVED EQUAL

NOTES:

1. FOR 6' DIA. BOX USE THE SAME SLAB REINFORCING, THICKNESS AND FILL HEIGHT, AS FOR A 6'-0" WIDTH BOX, ALTERNATE "B" AND "C".
2. FOR 7' DIA. BOX USE THE SAME SLAB REINFORCING, THICKNESS AND FILL HEIGHT, AS FOR A 8'-0" WIDTH BOX, ALTERNATE "B" AND "C".

UDP-38 TO UDP-45 | UDP-50 — (1) STORM MANHOLE AND CURB INLET DETAIL
SCALE N.T.S.

VARIOUS 05-06 Designed by Date						
J.L.A./A.G. 05-06 Drawn by Date						
P.G./L.P. 05-06 Checked by Date						
S.E. 05-06 Approved by Date	1	5/06	OA	SE	100% SUBMITTAL	
	No.	Date	By / Chk	App.	Revisions	

NORTH CORRIDOR METRORAIL EXTENSION - PRELIMINAR ENGINEERING (100%) SUBMITTAL

MIAMI-DADE COUNTY — MIAMI-DADE TRANSIT

PARSONS
7600 CORPORATE CENTER DRIVE, SUITE 500
MIAMI, FLORIDA 33126
PHONE: (786) 454-1000 FAX: (786) 845-7119
CERTIFICATE OF AUTHORIZATION NO. 1838
Approved Date

Nova Consulting, Inc.
10486 NW 31st Terrace, Miami, Florida, 33172
Florida Certification No. 7256
Approved Date

UTILITY AND DRAINAGE PLANS

UTILITY AND DRAINAGE DETAILS

Scale N.T.S. | Drawing UDP-50 | Sheet 308

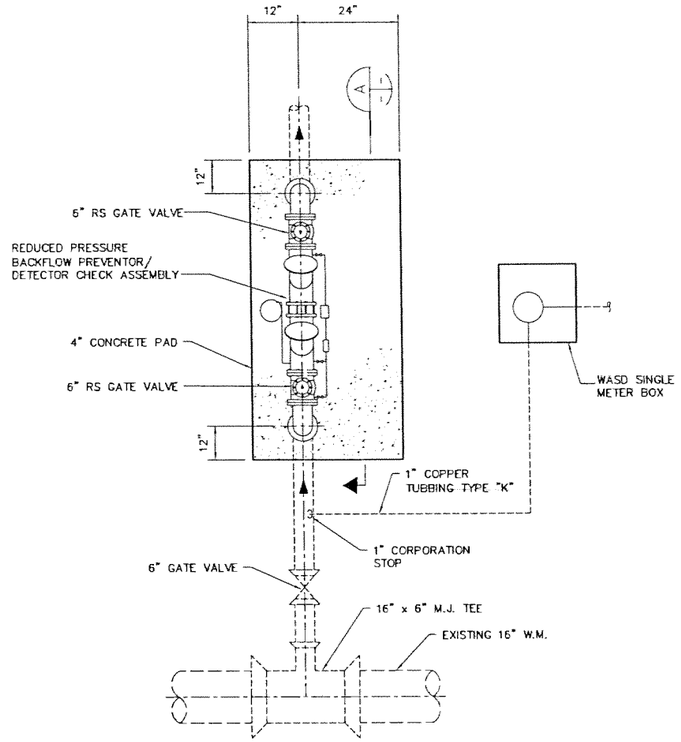

PLAN

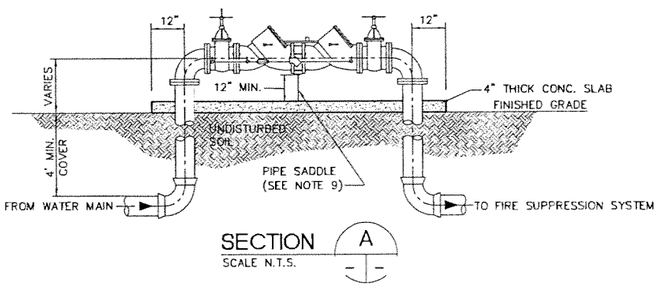

SECTION A

SCALE N.T.S.

REDUCED PRESSURE BACKFLOW PREVENTOR/ DETECTOR CHECK ASSEMBLY 1

SCALE N.T.S.

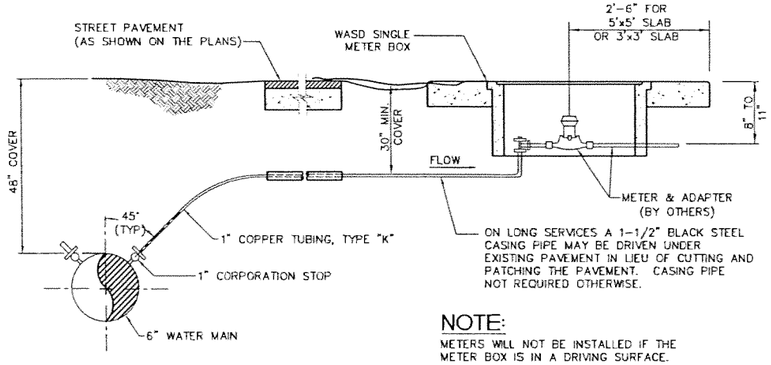

NOTE:

METERS WILL NOT BE INSTALLED IF THE METER BOX IS IN A DRIVING SURFACE.

TYPICAL 1" SERVICE CONNECTION WATER METER DETAIL 2

SCALE N.T.S.

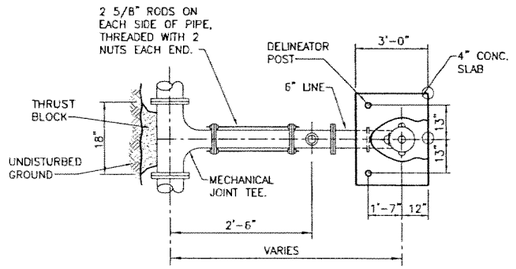

PLAN

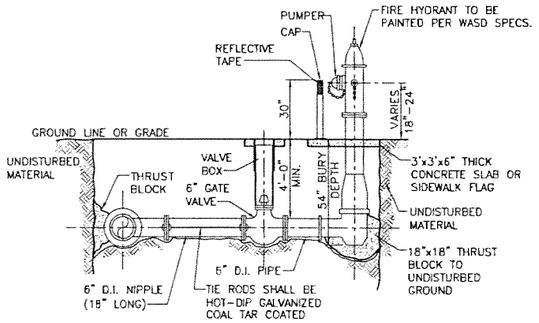

SECTION

TYPICAL FIRE HYDRANT INSTALLATION WITH GUARD POSTS 3

SCALE N.T.S.

FIRE HYDRANT NOTES:

1. DELINEATOR POST SHALL BE YELLOW, 30" HEIGHT, WITH 12-INCH FACTORY APPLIED PRISMATIC SUPER HIGH INTENSITY REFLECTIVE SHEETING AND IMPACT RESISTANT THERMOPLASTIC ALLOY BASE AND LOCKING PINS, SHALL BE FG300, BY DAVIDSON PLASTIC CORP., OR APPROVED EQUAL.
2. IN F.D.O.T. R/W ONLY USE PLASTIC SURFACE MOUNTED DELINEATOR POST INSTALLED WITH EPOXY ADHESIVE.
3. GALVANIZED STEEL GUARD POST SHALL NOT BE ALLOWED IN F.D.O.T. R/W.

BACKFLOW PREVENTOR NOTES:

1. THE ASSEMBLY SHALL BE INSTALLED WITH MINIMUM HORIZONTAL CLEARANCES OF 30 INCHES FREE FROM OBSTRUCTIONS IN ALL DIRECTIONS.
2. GUARD POSTS SHALL BE INSTALLED IF THE ASSEMBLY IS EXPOSED TO POSSIBLE DAMAGE FROM VEHICULAR TRAFFIC AS DETERMINED BY THE WATER AND SEWER DEPARTMENT.
3. THE ASSEMBLY SHALL BE INSTALLED IN AN ACCESSIBLE LOCATION, APPROVED BY THE WATER AND SEWER DEPARTMENT.
4. ALL JOINTS SHALL BE FLANGED OR RESTRAINED.
5. ALL ABOVE GROUND PIPING AND EQUIPMENT SHALL BE FINISHED WITH ENAMEL PAINT (KOP-COAT 0508 LEAD FREE)
6. 15/16" GALVANIZED WELDED LINK CHAIN (SUPPLIED BY THE CONTRACTOR) AND PADLOCK (TO BE PROVIDED BY MDT) CHAIN SHALL BE SECURED WITH PADLOCK (TO BE LOCKED BY MDT) TO BOTH WHEELS ON EITHER SIDE OF THE DOUBLE CHECK DETECTOR ASSEMBLY.
7. FOR RETROFIT PROJECTS, REPLACE THE EXISTING BACKFLOW PREVENTION DEVICE WITH A SPOOL PIECE, AND INSTALL A NEW DOUBLE DETECTOR CHECK VALVE ASSEMBLY.
8. ADJUSTABLE PIPE SADDLE SUPPORT (GRINNEL FIG.264, OR EQUAL SIZED TO FIT CURVATURE OF DOUBLE DETECTOR CHECK VALVE ASSEMBLY, WITH GALVANIZED STEEL PIPE AND FLOOR ATTACH FLOOR FLANGE TO CONCRETE SLAB WITH GALVANIZED EXPANSION BOLTS.
9. ASSEMBLY SHALL BE LOCATED IN A CONTINUOUSLY ACCESSIBLE LOCATION.
10. BACKFLOW PREVENTION ASSEMBLY SHALL BE ON THE APPROVED LIST OF FOUNDATION FOR CROSS-CONNECTION CONTROL.
11. DOUBLE DETECTOR ASSEMBLY SHALL BE FACTORY-ASSEMBLED, INCLUDING BYPASS METER AND VALVES.
12. NO ELECTRICAL EQUIPMENT OR TAMPER SWITCH SHALL BE PLACED ANYWHERE ON ASSEMBLY.
13. REDUCED PRESSURE ASSEMBLY SHALL BE USED FOR HIGH HAZARDOUS i.e. WITHIN 1700 FEET OF BODIES OF WATER.
14. REDUCED PRESSURE ZONE BACKFLOW PREVENTERS SHALL BE AS FOLLOWS:

MANUFACTURER	MODEL	
	3/4" THRU 2"	2-1/2" THRU 10"
WATTS REGULATOR CO.	D09QT OR 909QT	909QSYRW
FEBCO	825 YB	825YD-0SYRW
HERSEY	FRP-11	6CM-0SYRW
AMES	----------	4000-0SYRW
WILKINS	975 XL	975 XL-0SYRW
CONBRACO	40-2D(X)-A2	40-2D(X)-03-0SYRW

VARIOUS 05-06 Designed by Date					
J.L.A./A.G. 05-06 Drawn by Date					
P.G./L.P. 05-06 Checked by Date					
S.E. 05-06 Approved by Date	1	5/06	OA	SE	100% SUBMITTAL
	No.	Date	By / Chk	App.	Revisions

NORTH CORRIDOR METRORAIL EXTENSION - PRELIMINAR ENGINEERING (100%) SUBMITTAL

UTILITY AND DRAINAGE PLANS

MIAMI-DADE COUNTY

MIAMI-DADE TRANSIT

PARSONS
7600 CORPORATE CENTER DRIVE, SUITE 500
MIAMI, FLORIDA 33126
PHONE: (786) 464-1000 FAX: (786) 845-7119
CERTIFICATE OF AUTHORIZATION NO. 1638

Approved Date

Nova Consulting, Inc.
10486 NW 31st Terrace, Miami, Florida, 33172
Florida Certification No. 7256

Approved Date

UTILITY AND DRAINAGE DETAILS

Scale N.T.S. Drawing UPD-51 Sheet 204

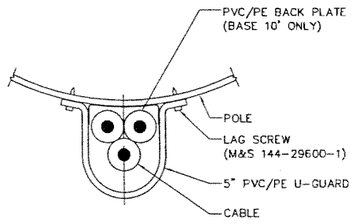

PLAN

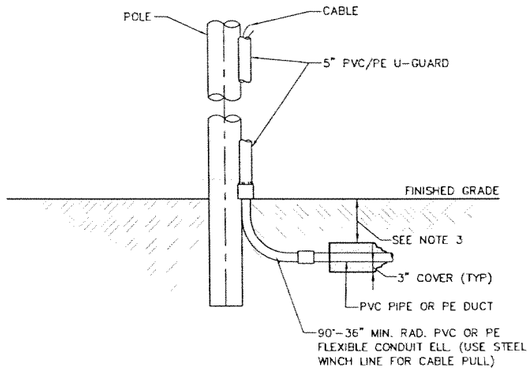

ELEVATION

NOTES:

1. SEE DWG.___ FOR MODUFLEX SUBSTATION RISERS.
2. SEE DWG. ___ FOR SUBSTATION GROUNDING AND BONDING DETAILS.
3. NESC. RULES REQUIRE MIN. 30" DEPTH FOR PRIMARY VOLTAGE CABLES WHERE CONC ENCASED, LESSER DEPTHS ARE PERMITTED.

ELECTRICAL POLE INSTALLATION DETAIL 3

SCALE N.T.S.

VARIOUS 05-06 Designed by Date					
J.L.A./A.G. 05-06 Drawn by Date					
P.G./L.P. 05-06 Checked by Date					
S.E. 05-06 Approved by Date	1	5/06	QA By / Chk	SE App.	100% SUBMITTAL Revisions

NORTH CORRIDOR METRORAIL EXTENSION - PRELIMINAR ENGINEERING (100%) SUBMITTAL

UTILITY AND DRAINAGE PLANS

MIAMI-DADE COUNTY

MIAMI-DADE TRANSIT

PARSONS
7600 CORPORATE CENTER DRIVE, SUITE 500
MIAMI, FLORIDA 33126
PHONE: (786) 464-1000 FAX: (786) 845-7119
CERTIFICATE OF AUTHORIZATION NO. 1836

Nova Consulting, Inc.
10486 NW 31st Terrace, Miami, Florido, 33172
Florida Certification No. 7256

Approved | Date | Approved | Date

ELECTRICAL DETAILS

Scale N.T.S. | Drawing UPD-52 | Sheet 210

DRAINAGE STRUCTURE ID	NEAREST COLUMN No.	STA.	TOTAL LENGTH OF FRENCH DRAIN (LF)
FSD-1	FC-1	451+00	20.0
FSD-3	FC-3	452+60	20.0
FSD-5	FC-5	455+22	20.0
FSD-7	FC-7	457+92	20.0
FSD-9	FC-9	460+62	20.0
FSD-11	FC-11	463+22	20.0
FSD-13	FC-13	97+20	20.0
FSD-15	FC-15	99+90	20.0
FSD-17	FC-17	102+00	20.0
FSD-19	FC-19	104+70	20.0
FSD-21	FC-21	107+40	30.0
FSD-23	FC-23	109+90	30.0
FSD-25W	FC-25	112+44	10.0
FSD-25E	FC-25	112+44	10.0
FSD-27W	FC-27	114+74	15.0
FSD-27E	FC-27	114+74	15.0
FSD-29W	FC-29	117+44	15.0
FSD-29E	FC-29	117+44	15.0
FSD-31	FC-31	120+44	30.0
SD-2	P-2	122+74	70.0
SD-4	P-4	132+64	50.0
SD-6	P-6	134+84	30.0
SD-8	P-8	137+34	40.0
SD-10	P-10	139+74	30.0
SD-12W	P-12	142+14	15.0
SD-12E	P-12	142+14	15.0
SD-14	P-14	144+84	30.0
SD-16	P-16	147+54	20.0
SD-18	P-18	150+24	20.0
SD-20	P-20	152+94	20.0
SD-22	P-22	155+64	10.0
SD-24	P-24	158+34	50.0
SD-26	P-26	161+04	10.0
SD-28	P-28	163+74	10.0
SD-30	P-30	166+44	30.0
SD-32	P-32	169+14	30.0
SD-34	P-34	171+84	30.0
SD-36	P-36	174+24	30.0
SD-38	P-38	176+34	30.0
SD-40	P-40	179+04	30.0
SD-42	P-42	181+74	30.0
SD-44	P-44	184+34	30.0
SD-46W	P-46	186+84	15.0
SD-46E	P-46	186+84	15.0
SD-48W	P-48	189+34	15.0
SD-48E	P-48	189+34	15.0
SD-50W	P-50	192+04	20.0
SD-50E	P-50	192+04	20.0
SD-52W	P-52	194+54	20.0
SD-52E	P-52	194+54	20.0
SD-54W	P-54	197+24	10.0
SD-54E	P-54	197+24	10.0
SD-56W	P-56	199+54	10.0
SD-56E	P-56	199+54	10.0
SD-58W	P-58	202+24	15.0
SD-58E	P-58	202+24	15.0
SD-60W	P-60	204+94	15.0
SD-60E	P-60	204+94	15.0
SD-62W	P-62	207+64	20.0
SD-62E	P-62	207+64	20.0
SD-64W	P-64	210+14	15.0
SD-64E	P-64	210+14	15.0
SD-66W	P-66	212+64	20.0
SD-66E	P-66	212+64	20.0
SD-68	P-68	215+34	50.0
SD-70	P-70	218+04	50.0
SD-72	P-72	220+74	50.0
SD-74W	P-74	223+24	30.0
SD-74E	P-74	223+24	30.0
SD-76W	P-76	225+94	30.0
SD-76E	P-76	225+94	30.0
SD-78	P-78	227+84	10.0
SD-80	P-80	230+24	10.0
SD-82W	P-82	232+54	25.0
SD-82E	P-82	232+54	25.0
SD-84W	P-84	234+54	25.0
SD-84E	P-84	234+54	25.0
SD-86W	P-86	236+44	10.0
SD-86E	P-86	236+44	10.0
SD-88W	P-88	238+94	10.0
SD-88E	P-88	238+94	10.0
SD-90W	P-90	241+44	15.0
SD-90E	P-90	241+44	15.0
SD-92W	P-92	243+84	10.0
SD-92E	P-92	243+84	10.0
SD-94W	P-94	245+94	25.0
SD-94E	P-94	245+94	25.0
SD-96W	P-96	255+50	25.0
SD-96E	P-96	255+50	25.0
SD-98W	P-98	257+94	15.0
SD-98E	P-98	257+94	15.0
SD-100	P-100	260+54	30.0
SD-102	P-102	263+14	90.0
SD-104	P-104	265+84	90.0
SD-106	P-106	268+54	80.0
SD-108	P-108	271+34	80.0
SD-110	P-110	273+94	70.0
SD-112	P-112	276+68	60.0
SD-114	P-114	278+64	30.0
SD-116	P-116	281+54	40.0
SD-118	P-118	284+34	10.0
SD-120	P-120	286+94	10.0
SD-122	P-122	289+68	20.0
SD-124	P-124	292+39	30.0
SD-126W	P-126	295+04	20.0
SD-126E	P-126	295+04	20.0
SD-128	P-128	298+04	40.0
SD-130	P-130	300+64	30.0
SD-132	P-132	303+34	30.0
SD-134	P-134	305+94	60.0
SD-136	P-136	308+74	50.0
SD-138	P-138	310+84	50.0
SD-140W	P-140	313+04	10.0
SD-140E	P-140	313+04	10.0
SD-142W	P-142	315+54	15.0
SD-142E	P-142	315+54	15.0
SD-144W	P-144	318+24	15.0
SD-144E	P-144	318+24	15.0
SD-146W	P-146	320+54	10.0
SD-146E	P-146	320+54	10.0
SD-148W	P-148	322+54	15.0
SD-148E	P-148	322+54	15.0
SD-150W	P-150	325+64	15.0
SD-150W	P-150	325+64	15.0
SD-152W	P-152	328+14	15.0
SD-152E	P-152	328+14	15.0
SD-154W	P-154	330+94	20.0
SD-154E	P-154	330+94	20.0
SD-156W	P-156	333+24	15.0
SD-156E	P-156	333+24	15.0
SD-158W	P-158	335+84	35.0
SD-158E	P-158	335+84	35.0
SD-159W	P-159	343+74	25.0
SD-159E	P-159	343+74	25.0
SD-161W	P-161	346+44	15.0
SD-161E	P-161	346+44	15.0
SD-163	P-163	349+14	20.0
SD-165	P-165	351+84	20.0
SD-167	P-167	354+54	10.0
SD-169	P-169	357+24	20.0
SD-171	P-171	359+94	20.0
SD-173	P-173	362+64	20.0
SD-175	P-175	365+34	20.0
SD-177	P-177	367+24	10.0
SD-179	P-179	369+64	10.0
SD-181	P-181	372+64	10.0
SD-183	P-183	374+64	10.0
SD-185	P-185	377+34	30.0
SD-187	P-187	380+04	30.0
SD-189	P-189	382+74	50.0
SD-191	P-191	385+44	50.0
SD-193W	P-193	387+94	30.0
SD-193E	P-193	387+94	30.0
SD-195W	P-195	390+64	35.0
SD-195E	P-195	390+64	35.0
SD-197W	P-197	393+14	15.0
SD-197E	P-197	393+14	15.0
SD-200W	P-200	403+94	10.0
SD-200E	P-200	403+94	10.0
SD-202W	P-202	406+74	15.0
SD-202E	P-202	406+74	15.0
SD-204	P-204	409+44	30.0
SD-206	P-206	411+84	20.0
SD-208	P-208	414+14	10.0
SD-210	P-210	417+14	30.0
SD-212	P-212	419+84	30.0
SD-214	P-214	422+44	30.0
SD-216	P-216	425+14	30.0
SD-218	P-218	427+84	30.0
SD-220	P-220	430+54	30.0
SD-222	P-222	433+24	40.0
SD-224	P-224	435+64	30.0
SD-226	P-226	438+34	50.0
SD-228	P-228	440+84	50.0
SD-230	P-230	443+54	40.0
SD-232	P-232	446+24	40.0
SD-234	P-234	448+94	20.0
SD-236	P-236	451+64	20.0
SD-238W	P-238	454+14	10.0
SD-238E	P-238	454+14	10.0
SD-240W	P-240	456+84	10.0
SD-240E	P-240	456+84	10.0
SD-242W	P-242	459+54	10.0
SD-242E	P-242	459+54	10.0
SD-244W	P-244	469+94	35.0
SD-244E	P-244	469+94	35.0
SD-246	P-246	472+64	50.0
SD-248	P-248	475+34	50.0
SD-250	P-250	478+04	30.0
SD-252	P-252	480+44	30.0
SD-254	P-254	483+14	30.0
SD-256	P-256	485+44	30.0
SD-258	P-258	488+14	10.0
SD-260W	P-260	490+84	15.0
SD-260E	P-260	490+84	15.0
SD-262	P-262	493+54	20.0
SD-264	P-264	496+54	20.0
SD-266	P-266	499+24	20.0
SD-268W	P-268	501+94	10.0
SD-268E	P-268	501+94	10.0
SD-270W	P-270	504+64	10.0
SD-270E	P-270	504+64	10.0
SD-272W	P-272	507+34	10.0
SD-272E	P-272	507+34	10.0
SD-274W	P-274	510+04	10.0
SD-274E	P-274	510+04	10.0
SD-276W	P-276	512+74	10.0
SD-276E	P-276	512+74	10.0
SD-278W	P-278	515+44	20.0
SD-278E	P-278	515+44	20.0
SD-281W	P-281	525+74	40.0
SD-281E	P-281	525+74	40.0
SD-283W	P-283	528+44	15.0
SD-283E	P-283	528+44	15.0
SD-285W	P-285	531+14	15.0
SD-285E	P-285	531+14	15.0
SD-287	P-287	533+84	70.0
SD-289	P-289	536+54	20.0
SD-291	P-291	539+24	20.0
SD-294	P-294	543+59	40.0
SD-297	P-297	547+64	20.0
SD-299	P-299	549+94	20.0
SD-301	P-301	552+24	20.0
SD-307W	P-307	560+54	65.0
SD-307E	P-307	560+54	65.0
SD-309W	P-309	562+74	10.0
SD-309E	P-309	562+74	10.0
SD-311W	P-311	565+14	10.0
SD-311E	P-311	565+14	10.0
SD-313W	P-313	568+14	60.0
SD-313E	P-313	568+14	60.0
SD-314W	P-314	576+54	60.0
SD-314E	P-314	576+54	60.0
SD-316	P-316	578+64	80.0

J.P.S. 01-06 Designed by Date					
A.G. 01-06 Drawn by Date					
– – Checked by Date					
– – Approved by Date	1	5/06	OA	SE	100% SUBMITTAL
	No.	Date	By / Chk	App.	Revisions

NORTH CORRIDOR METRORAIL EXTENSION - PRELIMINAR ENGINEERING (100%) SUBMITTAL

MIAMI-DADE COUNTY

MIAMI-DADE TRANSIT

PARSONS
7600 CORPORATE CENTER DRIVE, SUITE 500
MIAMI, FLORIDA 33126
PHONE: (786) 464-1000 FAX: (786) 845-7119
CERTIFICATE OF AUTHORIZATION NO. 1838

Approved Date

Nova Consulting, Inc.
10486 NW 31st Terrace, Miami, Florida, 33172
Florida Certification No. 7256

Approved Date

UTILITY AND DRAINAGE PLANS

DRAINAGE STRUCTURE INDEX

Scale – Drawing UDP-53 Sheet 21

A. SPECIFICATIONS

1. GENERAL:
   - A. GOVERNING SPECIFICATIONS: STATE OF FLORIDA DEPARTMENT OF TRANSPORTATION, STANDARD SPECIFICATIONS, (2004 EDITION) AND APPROVED SUPPLEMENTAL SPECIFICATIONS.

2. DESIGN:
   - A. AASHTO/LRFD BRIDGE DESIGN SPECIFICATIONS, 2004, INCLUDING INTERIM SPECIFICATIONS.
   - B. FLORIDA DEPARTMENT OF TRANSPORTATION, "STRUCTURES DESIGN GUIDELINES FOR LRFD" (REVISED EDITION JAN. 1, 2005).
   - C. AMERICAN RAILWAY ENGINEERING AND MAINTENANCE-OF-WAY ASSOCIATION (AREMA), MANUAL FOR RAILWAY ENGINEERING, 2005.
   - D. MDT COMPENDIUM OF DESIGN CRITERIA, VOLUME III, CHAPTER 3 - STRUCTURAL DESIGN CRITERIA FOR AERIAL GUIDEWAY

B. DESIGN LOADINGS

1. DEAD LOADS:
   - A. UNIT WEIGHT OF REINFORCED CONCRETE: 150 Lb/Ft^3
   - B. ACOUSTICAL BARRIER: 500 Lb/Ft

2. LIVE LOADS:
   - A. METORAIL TRANSIT VEHICLE:
     CRUSH LOAD: 110,900 Lb

3. THERMAL FORCES:
   - A. SEASONAL VARIATION
     MEAN TEMPERATURE: 70°F
     THERMAL COEFFICIENT = 6.0 x 10^{-6} PER DEG. F.
     (1) DESIGN OF STRUCTURE
     LRFD 3.12.2 - MODERATE CLIMATE
     (2) SIZING BEARINGS & JOINTS
     TEMPERATURE RISE = 25°F
     TEMPERATURE FALL = 25°F
   - B. DIFFERENTIAL TEMPERATURE
     (1) NON-LINEAR TEMPERATURE GRADIENT
     AS PER AASHTO LRFD SECTION 3.12 ZONE 3.
     (2) NEGATIVE DIFFERENTIAL: MULTIPLY POSITIVE TEMPERATURE VALUE BY - 0.30.

5. CREEP/SHRINKAGE:
   - A. EFFECTS OF CREEP AND SHRINKAGE IN ACCORDANCE WITH CEB-FIP 1990.
   - B. RELATIVE HUMIDITY = 75%.

6. SEISMIC LOADS:
   DESIGN BEARINGS USING UNIFORM LOAD METHOD AS PER AASHTO LRFD 4.7.4.3.1 AND 4.7.4.3.2.

7. ERECTION LOADS:
   AS PER AASHTO LRFD - SECTION 5.14.2.

C. MATERIALS

1. CONCRETE: (28 DAY CYLINDER STRENGTH AS NOTED):
   PROPERTIES ARE BASED ON THE USE OF FLORIDA LIMEROCK AGGREGATE.
   CONCRETE SHALL CONFORM WITH SECTION 346.

LOCATION	CLASS	f'c (Ksi)
PRECAST SUPERSTRUCTURE SEGMENTS	IV	5.5
CIP SUPERSTRUCTURE CLOSURE SEGMENTS	IV	5.5
CIP BARRIERS	IV	5.5
CIP PIERS	IV (MASS)	5.5
CIP FOOTINGS	IV (MASS)	5.5
CIP DRILLED SHAFTS	IV (MASS)	4.0

3. CONCRETE COVERS:
   CONCRETE COVERS SHOWN IN THE PLANS DO NOT INCLUDE REINFORCEMENT PLACEMENT AND FABRICATION TOLERANCES UNLESS SHOWN AS "MINIMUM COVER." SEE FDOT STANDARD SPECIFICATIONS FOR ALLOWABLE TOLERANCES.

	COVER	DESCRIPTION
SUPERSTRUCTURE (PRECAST)	2½ in	TOP RIDING SURFACE
	2 in	INTERNAL AND EXTERNAL SURFACES
SUPERSTRUCTURE (CIP, TYPICAL)	2½ in	TOP RIDING SURFACE
	2 in	INTERNAL AND EXTERNAL SURFACES
SUPERSTRUCTURE (CIP, BARRIER)	2 in	EXTERNAL SURFACES
SUBSTRUCTURE (CIP)	4 in	EXTERNAL SURFACES FORMED
	4 in	EXTERNAL SURFACES CAST AGAINST EARTH OR IN CONTACT WITH WATER
	6 in	DRILLED SHAFTS

4. REINFORCING STEEL:
   ALL REINFORCING STEEL SHALL BE ASTM A615M-96a, GRADE 60.

5. PRESTRESSING STEEL:
   - A. STRAND: ASTM A-416, GRADE 270, LOW RELAXATION.
     PARAMETERS:
     - MODULUS OF ELASTICITY: 28,500 Ksi
     - MAXIMUM JACKING STRESS: 0.8 fpu
     - MAXIMUM ANCHORING STRESS AT END OF SEATING ZONE: 0.74fpu
     - MAXIMUM ANCHORING STRESS AT ANCHOR: 0.7fpu
     - ANCHOR SET: 0.50 in (POST-TENSIONING)
     - FRICTION COEFFICIENT: 0.25 (GALVANIZED STEEL DUCT)
       0.23 (POLYETHYLENE DUCT)
     - WOBBLE COEFFICIENT: 0 (EXTERNAL TENDONS)
       0.0002/ft (INTERNAL TENDONS-GALVANIZED STEEL OR POLYETHYLENE DUCTS)
     - STRAND DIAMETER: 0.6 in (POST-TENSIONING)
   - B. BARS: ASTM A722, GRADE 150
     PARAMETERS:
     - MODULUS OF ELASTICITY: 29,000 Ksi
     - MAXIMUM OF JACKING STRESS: 0.80fpu
     - MAXIMUM ANCHORING STRESS AT ANCHOR: 0.70fpu
     - ANCHOR SET: 0

6. ELASTOMERIC BEARINGS:
   DUROMETER 50, STEEL LAMINATED

D. ALLOWABLE STRESSES/LOADS

1. DESIGN METHOD:
   LOAD RESISTANCE AND FACTOR DESIGN, SATISFYING ALL LIMIT STATES.

2. PRESTRESSED CONCRETE:
   - A. STRESSES AT SERVICE LIMIT STATE AFTER ALL LOSSES HAVE OCCURRED
     1. COMPRESSION = 0.45 f'c
     2. TENSION IN PRECOMPRESSED TENSILE ZONE
        A. LONGITUDINAL = 0 (TYPE A EPOXIED JOINTS)
        B. TRANSVERSE = 0.0948 $\sqrt{f'c}$
     3. PRINCIPAL TENSION = 0.1265 $\sqrt{f'c}$
   - B. CONSTRUCTION STRESSES
     1. COMPRESSION = 0.50 f'c
     2. TENSION STRESSES WILL BE IN ACCORDANCE WITH TABLE 5.14.2.3.3-1 OF THE AASHTO LRFD BRIDGE DESIGN SPECIFICATIONS.
     3. REQUIRED MINIMUM COMPRESSIVE STRESS ON EPOXY JOINTS DURING HARDENING = 0.030 Ksi AND AVERAGE STRESS OF 0.040 Ksi
     4. PRINCIPAL TENSION = 0.1265 $\sqrt{f'c}$

3. SEGMENT CASTING AND ERECTION:
   - A. TYPE A EPOXIED JOINTS BETWEEN PRECAST SEGMENTS.
   - B. MINIMUM CONCRETE STRENGTH PRIOR TO LIFTING SEGMENTS OR LOWERING SUPPORT FORMS: 2.5 Ksi
   - C. MINIMUM CONCRETE STRENGTH PRIOR TO TRANSVERSE POST-TENSIONING: 4.0 Ksi (TENDONS MAY BE STRESSED TO 50% OF FINAL JACK FORCE WHEN MIN. CONCRETE STRENGTH IS 2.5 Ksi)
   - D. MINIMUM CONCRETE STRENGTH PRIOR TO STRESSING LONGITUDINAL POST-TENSIONING: 5.5 Ksi (PRECAST ELEMENTS). 2.5 Ksi CLOSURE JOINTS.

E. FOUNDATIONS

ALL PIERS AND ABUTMENTS SHALL BE SUPPORTED ON DRILLED SHAFTS. SEE FOUNDATION LAYOUT SHEETS FOR ADDITIONAL INFORMATION.

F. BEARING REPLACEMENT

PROVISIONS HAVE BEEN MADE FOR JACKING THE SUPERSTRUCTURE FOR FUTURE REPLACEMENT OF BEARINGS.

GTH Designed by	1-Nov-05 Date					
JLS Drawn by	5-May-06 Date					
JER Checked by	5-May-06 Date					
TWS Approved by	5-May-06 Date	No.	Date	By / Chk	App.	Revisions

NORTH CORRIDOR METRORAIL EXTENSION - PRELIMINARY ENGINEERING (100% SUBMITTAL)

SUBJECT TO CHANGE

MIAMI-DADE COUNTY

MIAMI-DADE TRANSIT

PARSONS
7600 CORPORATE CENTER DRIVE, SUITE 500
MIAMI, FLORIDA 33126
PHONE: (786) 464-1000 FAX: (786) 845-7119
CERTIFICATE OF AUTHORIZATION NO. 1838

Approved | Date | Approved | Date

STRUCTURES - GUIDEWAY (CONCRETE)

GENERAL NOTES

Scale: NTS | Drawing: SGC- 1 | Sheet: 212

5/8/2006 5:24:50 PM g:\646331_north_corridor\cadd\dgn\new alignment\general notes01.dgn

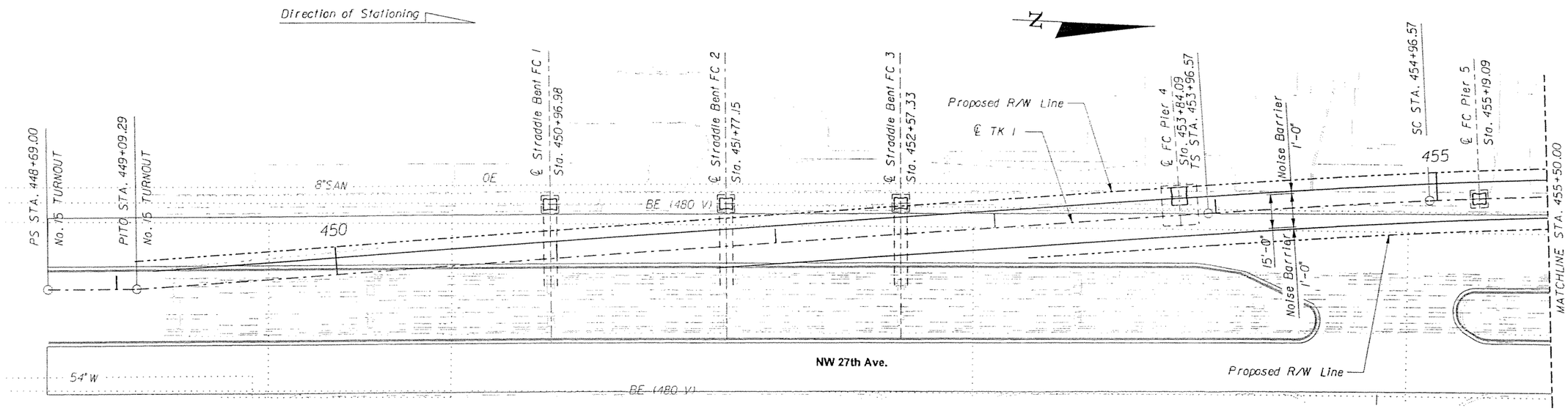

PLAN

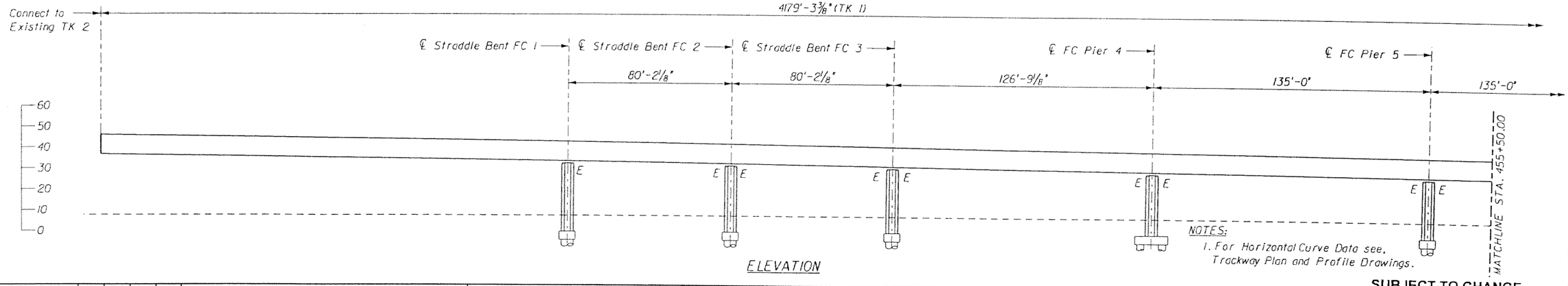

ELEVATION

SUBJECT TO CHANGE

GTH Designed by	1-Nov-05 Date				
KDK Drawn by	5-May-06 Date				
JER Checked by	5-May-06 Date				
TWS Approved by	5-May-06 Date	No.	Date	By / Chk	App.	Revisions

NORTH CORRIDOR METRORAIL EXTENSION - PRELIMINARY ENGINEERING (100% SUBMITTAL)

MIAMI-DADE COUNTY

MIAMI-DADE TRANSIT

PARSONS
7600 CORPORATE CENTER DRIVE, SUITE 500
MIAMI, FLORIDA 33126
PHONE: (786) 464-1000 FAX: (786) 845-7119
CERTIFICATE OF AUTHORIZATION NO. 1838

Approved | Date | Approved | Date

STRUCTURES - GUIDEWAY (CONCRETE)

GENERAL PLAN AND ELEVATION 1

Scale 1"=50' | Drawing SGC- 2 | Sheet 213

5/5/2006 5:29:19 PM g:\646331_north_corridor\cadd\dgn\new alignment\ngpe-01.dgn

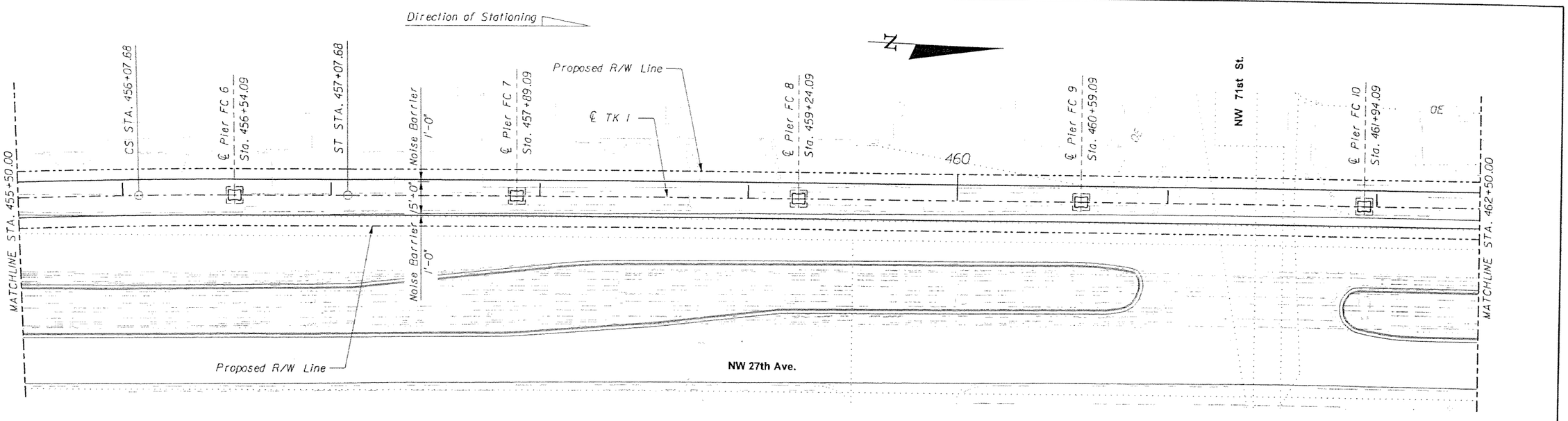

PLAN

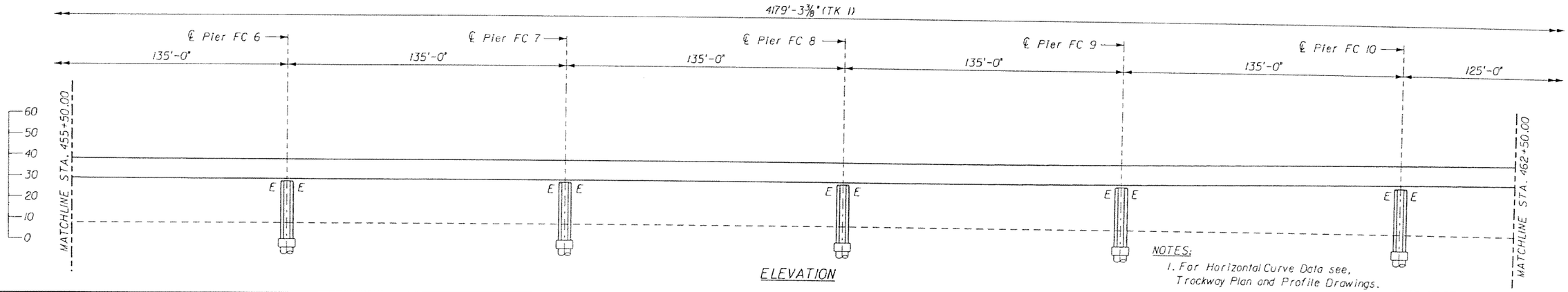

ELEVATION

NOTES:
1. For Horizontal Curve Data see, Trackway Plan and Profile Drawings.

SUBJECT TO CHANGE

GTH Designed by	1-Nov-05 Date				
KDK Drawn by	5-May-06 Date				
JER Checked by	5-May-06 Date				
TWS Approved by	5-May-06 Date	No.	Date	By / Chk	App.	Revisions

NORTH CORRIDOR METRORAIL EXTENSION - PRELIMINARY ENGINEERING (100% SUBMITTAL)

STRUCTURES - GUIDEWAY (CONCRETE)

MIAMI-DADE COUNTY

MIAMI-DADE TRANSIT

PARSONS
7600 CORPORATE CENTER DRIVE, SUITE 500
MIAMI, FLORIDA 33126
PHONE: (786) 464-1000 FAX: (786) 845-7119
CERTIFICATE OF AUTHORIZATION NO. 1838

Approved | Date | Approved | Date

GENERAL PLAN AND ELEVATION 2

Scale 1" = 50' | Drawing SGC- 3 | Sheet 2

5/8/2006 5:29:21 PM g:\646331_north_corridor\cadd\dgn\new alignment\ngpe-02.dgn

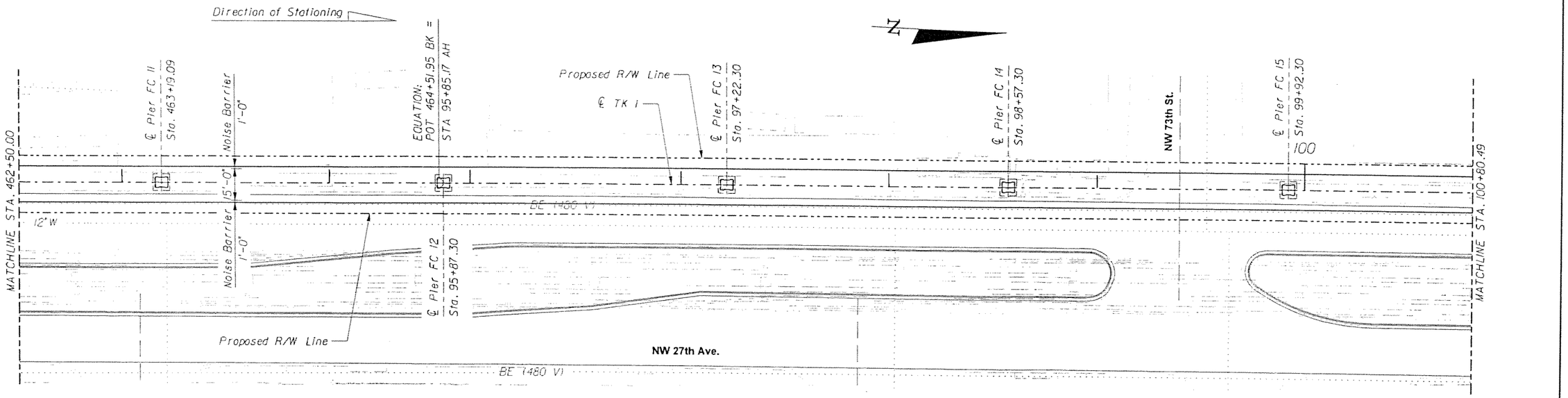

PLAN

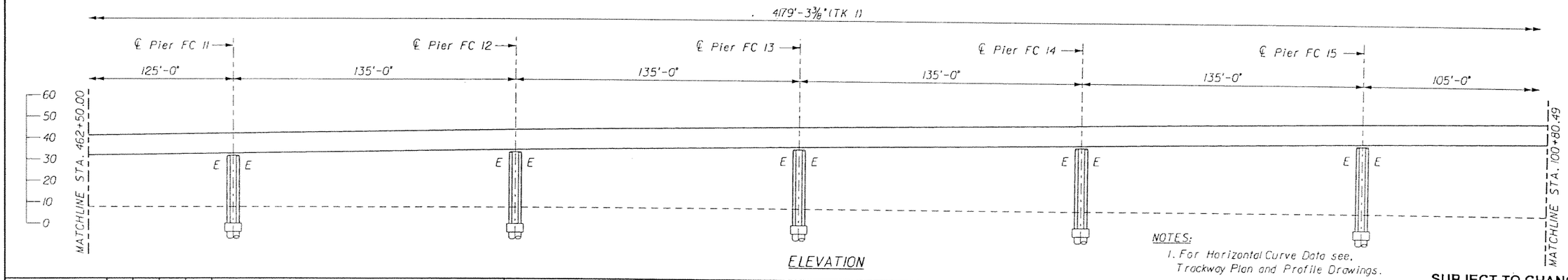

ELEVATION

NOTES:
1. For Horizontal Curve Data see, Trackway Plan and Profile Drawings.

SUBJECT TO CHANGE

GTH Designed by	1-Nov-05 Date				
KDK Drawn by	5-May-06 Date				
JER Checked by	5-May-06 Date				
TWS Approved by	5-May-06 Date	No.	Date	By / Chk	App. Revisions

NORTH CORRIDOR METRORAIL EXTENSION - PRELIMINARY ENGINEERING (100% SUBMITTAL)

STRUCTURES - GUIDEWAY (CONCRETE)

MIAMI-DADE COUNTY

MIAMI-DADE TRANSIT

PARSONS
7600 CORPORATE CENTER DRIVE, SUITE 500
MIAMI, FLORIDA 33126
PHONE: (786) 464-1000 FAX: (786) 845-7119
CERTIFICATE OF AUTHORIZATION NO. 1638

Approved | Date | Approved | Date

GENERAL PLAN AND ELEVATION 3

Scale 1" = 50' | Drawing SGC- 4 | Sheet 215

5/8/2006 5:29:24 PM g:\646331_north_corridor\cadd\dgn\new alignment\fc ape-03.dgn

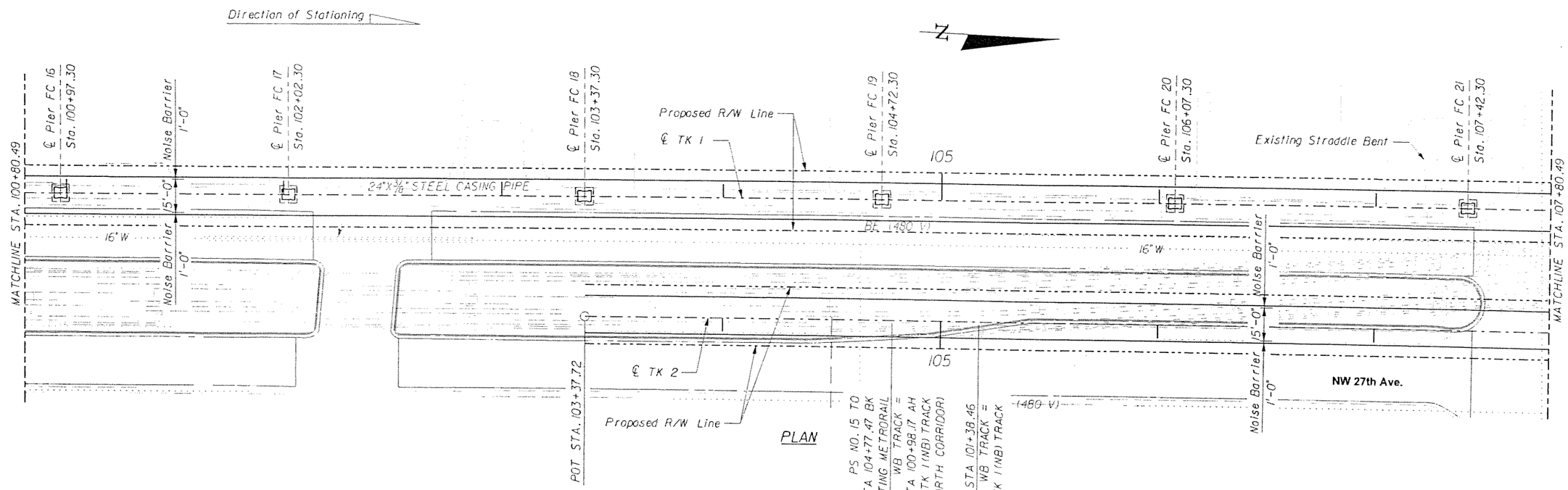

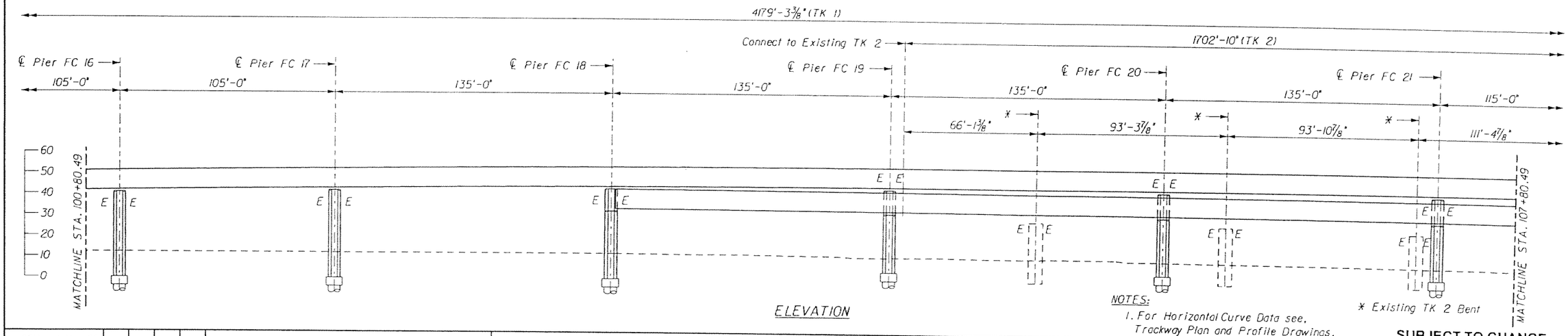

GTH Designed by	1-Nov-05 Date					
KDK Drawn by	5-May-06 Date					
JER Checked by	5-May-06 Date					
TWS Approved by	5-May-06 Date	No.	Date	By / Chk	App.	Revisions

NORTH CORRIDOR METRORAIL EXTENSION - PRELIMINARY ENGINEERING (100% SUBMITTAL)

MIAMI-DADE COUNTY

MIAMI-DADE TRANSIT

PARSONS
7600 CORPORATE CENTER DRIVE, SUITE 500
MIAMI, FLORIDA 33126
PHONE: (786) 464-1000 FAX: (786) 645-7119
CERTIFICATE OF AUTHORIZATION NO. 1838

Approved | Date | Approved | Date

STRUCTURES - GUIDEWAY (CONCRETE)

GENERAL PLAN AND ELEVATION 4

Scale 1"=50' | Drawing SGC- 5 | Sheet 2.16

5/8/2006 5:29:28 PM g:\046331_north_corridor\cadd\dgn\new alignment\c gpe-04.dgn

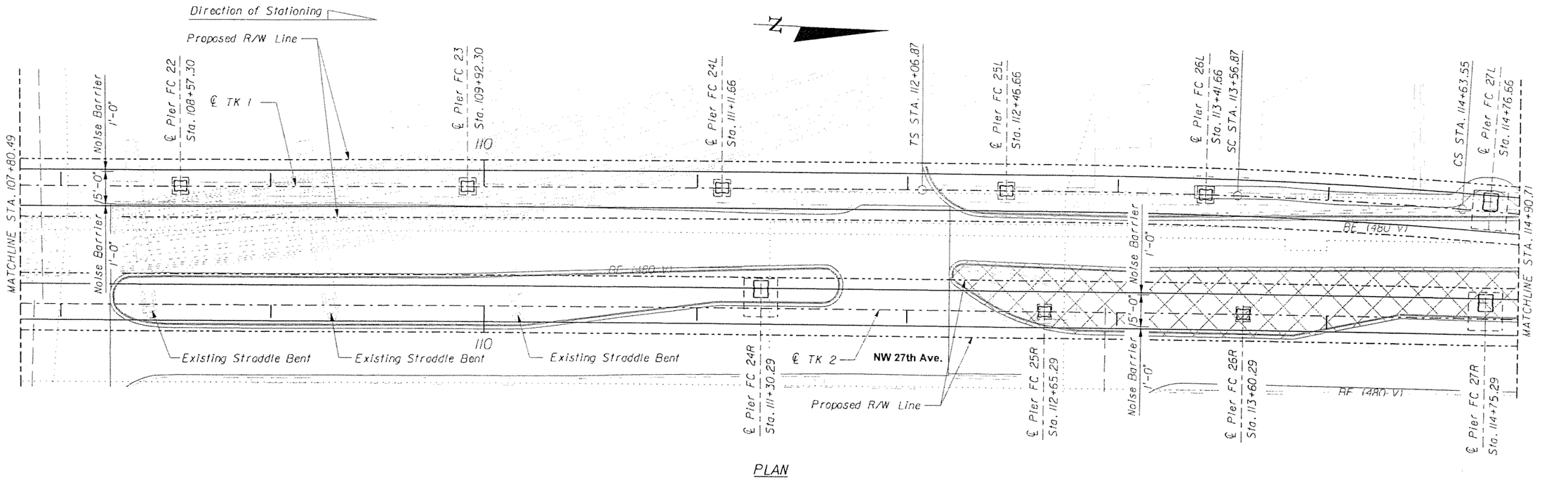

PLAN

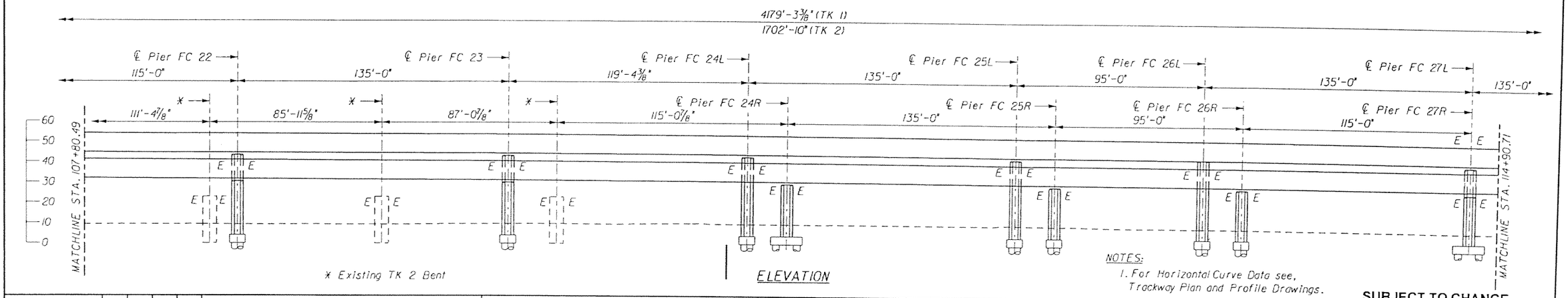

ELEVATION

NOTES:
1. For Horizontal Curve Data see, Trackway Plan and Profile Drawings.

SUBJECT TO CHANGE

GTH Designed by	1-Nov-05 Date				
KDK Drawn by	5-May-06 Date				
JER Checked by	5-May-06 Date				
TWS Approved by	5-May-06 Date	No.	Date	By / Chk	App.	Revisions

NORTH CORRIDOR METRORAIL EXTENSION - PRELIMINARY ENGINEERING (100% SUBMITTAL)

MIAMI-DADE COUNTY

MIAMI-DADE TRANSIT

PARSONS
7600 CORPORATE CENTER DRIVE, SUITE 500
MIAMI, FLORIDA 33126
PHONE: (786) 464-1000 FAX: (786) 845-7119
CERTIFICATE OF AUTHORIZATION NO. 1838

Approved | Date | Approved | Date

STRUCTURES - GUIDEWAY (CONCRETE)

GENERAL PLAN AND ELEVATION 5

Scale 1"=50' | Drawing SGC- 6 | Sheet 217

5/8/2006 5:29:31 PM g:\646331_north_corridor\cadd\dgn\new alignment\tc gpe-05.dgn

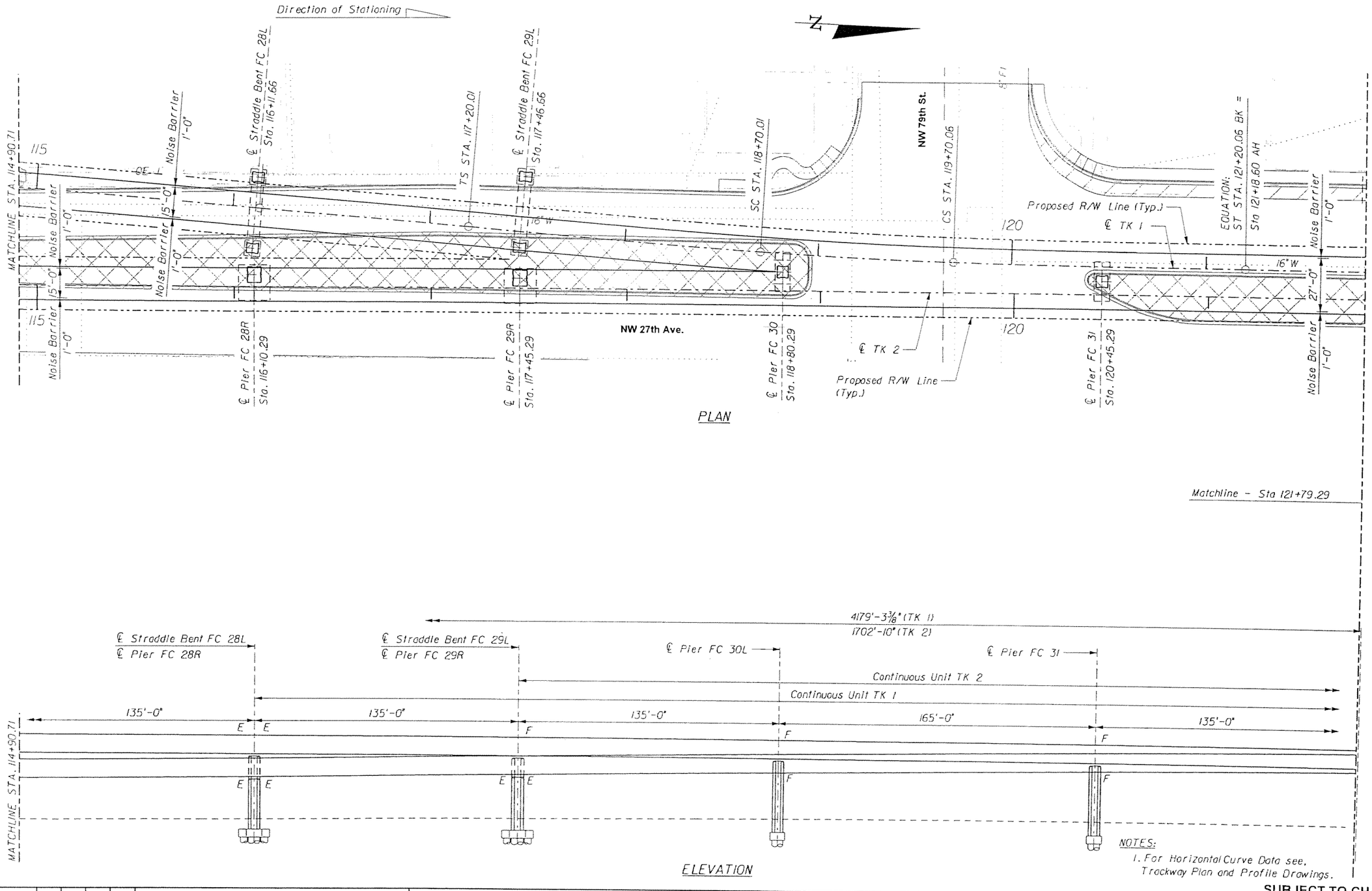

GTH Designed by	1-Nov-05 Date				
KDK Drawn by	5-May-06 Date				
JER Checked by	5-May-06 Date				
TWS Approved by	5-May-06 Date	No.	Date	By / Chk	App.	Revisions

SUBJECT TO CHANGE

NORTH CORRIDOR METRORAIL EXTENSION - PRELIMINARY ENGINEERING (100% SUBMITTAL)

STRUCTURES - GUIDEWAY (CONCRETE)

MIAMI-DADE COUNTY

MIAMI-DADE TRANSIT

PARSONS
7600 CORPORATE CENTER DRIVE, SUITE 500
MIAMI, FLORIDA 33126
PHONE: (786) 464-1000 FAX: (786) 845-7119
CERTIFICATE OF AUTHORIZATION NO. 1838

GENERAL PLAN AND ELEVATION 6

Approved | Date | Approved | Date | Scale 1" = 50' | Drawing SGC- 7 | Sheet 218

5/8/2006 5:29:36 PM g:\646331_north_corridor\cadd\dgn\new alignment\c gpe-06.dgn

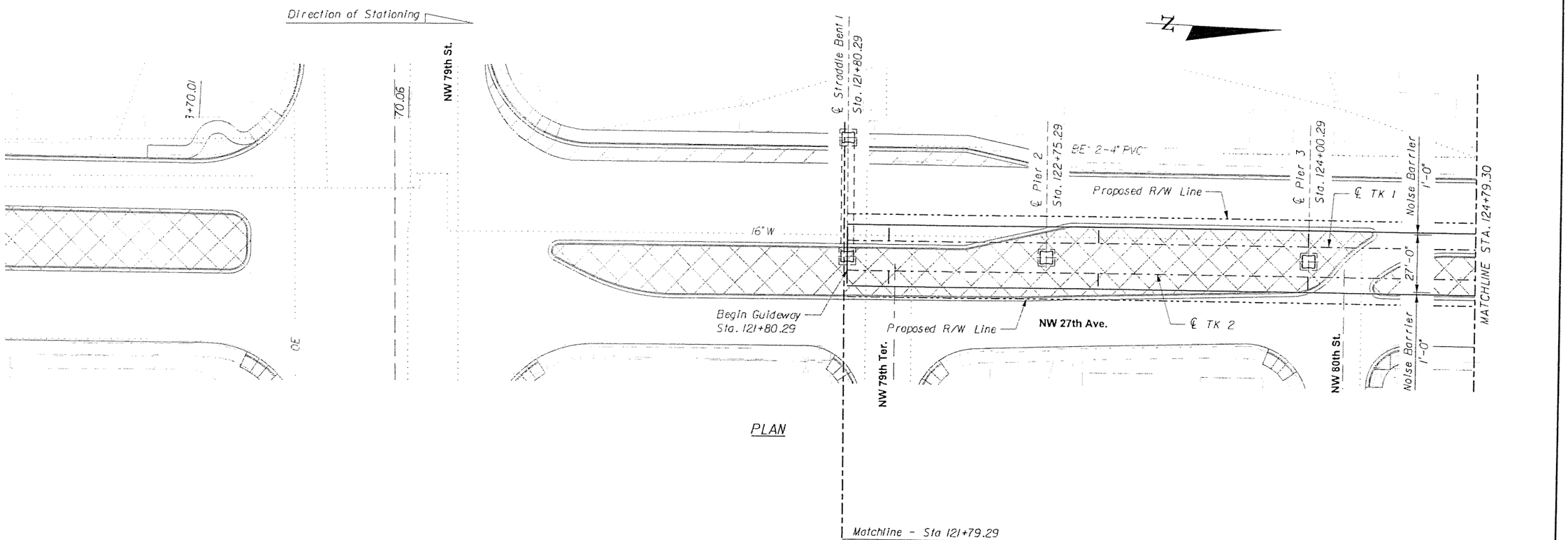

NOTES:
1. For Horizontal Curve Data see, Trackway Plan and Profile Drawings.

SUBJECT TO CHANGE

GTH Designed by	1-Nov-05 Date				
KDK Drawn by	5-May-06 Date				
JER Checked by	5-May-06 Date				
TWS Approved by	5-May-06 Date	No.	Date	By / Chk	App. Revisions

NORTH CORRIDOR METRORAIL EXTENSION - PRELIMINARY ENGINEERING (100% SUBMITTAL)

STRUCTURES - GUIDEWAY (CONCRETE)

MIAMI-DADE COUNTY

MIAMI-DADE TRANSIT

PARSONS
7600 CORPORATE CENTER DRIVE, SUITE 500
MIAMI, FLORIDA 33126
PHONE: (786) 464-1000 FAX: (786) 845-7119
CERTIFICATE OF AUTHORIZATION NO. 1838

GENERAL PLAN AND ELEVATION 7

Approved | Date | Approved | Date

Scale 1" = 50' | Drawing SGC- 8 | Sheet 29

5/8/2006 5:24:58 PM g:\646331_north_corridor\cadd\dgn\new alignment\gpe-01.dgn

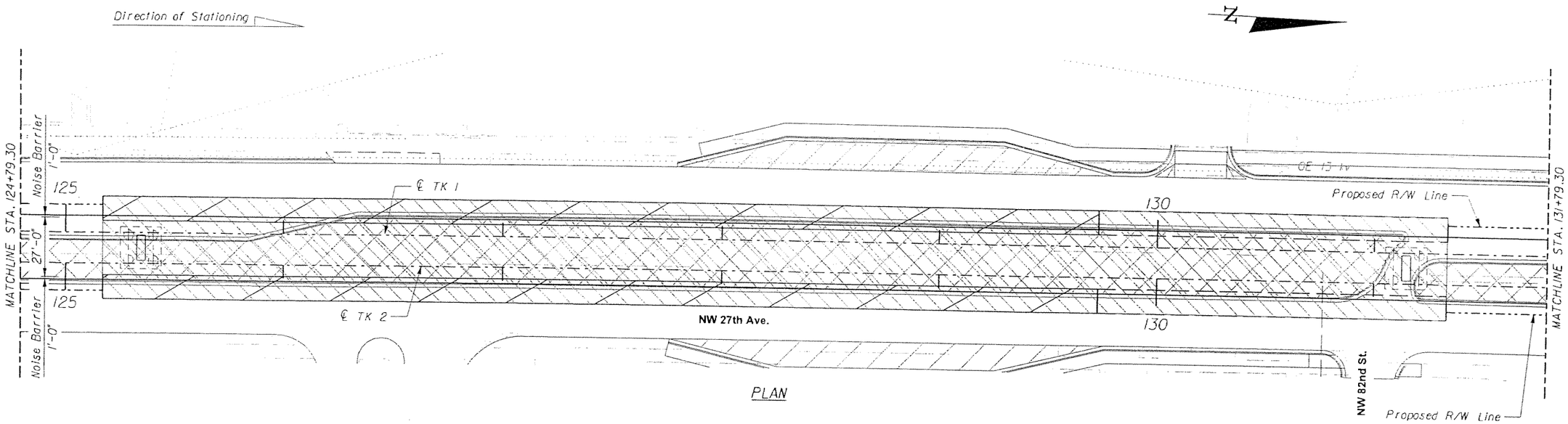

PLAN

45,936'-0 5/8" (Overall Guideway Length)

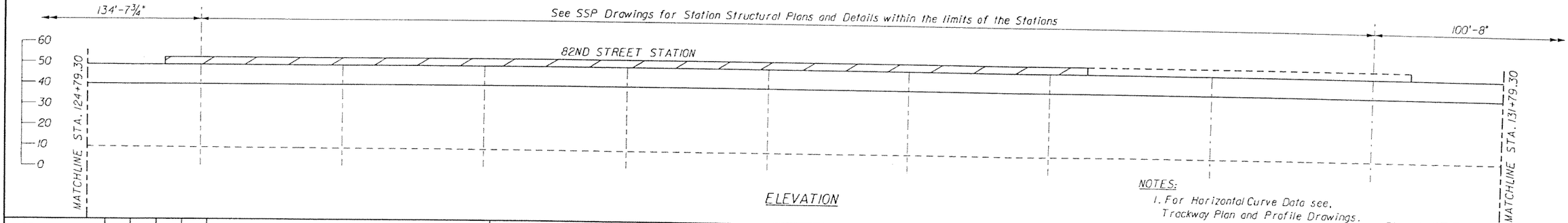

ELEVATION

NOTES:
1. For Horizontal Curve Data see, Trackway Plan and Profile Drawings.

SUBJECT TO CHANGE

GTH Designed by	1-Nov-05 Date					
KDK Drawn by	5-May-06 Date					
JER Checked by	5-May-06 Date					
TWS Approved by	5-May-06 Date	No.	Date	By / Ck.	App.	Revisions

NORTH CORRIDOR METRORAIL EXTENSION - PRELIMINARY ENGINEERING (100% SUBMITTAL)

MIAMI-DADE COUNTY

MIAMI-DADE TRANSIT

PARSONS
7600 CORPORATE CENTER DRIVE, SUITE 500
MIAMI, FLORIDA 33126
PHONE: (786) 464-1000 FAX: (786) 845-7119
CERTIFICATE OF AUTHORIZATION NO. 1838

Approved | Date

Approved | Date

STRUCTURES - GUIDEWAY (CONCRETE)

GENERAL PLAN AND ELEVATION 8

Scale 1" = 50' | Drawing SGC- 9 | Sheet 220

5/8/2006 5:25:00 PM g:\646331_north_corridor\cadd\dgn\new alignment\gpe-02.dgn

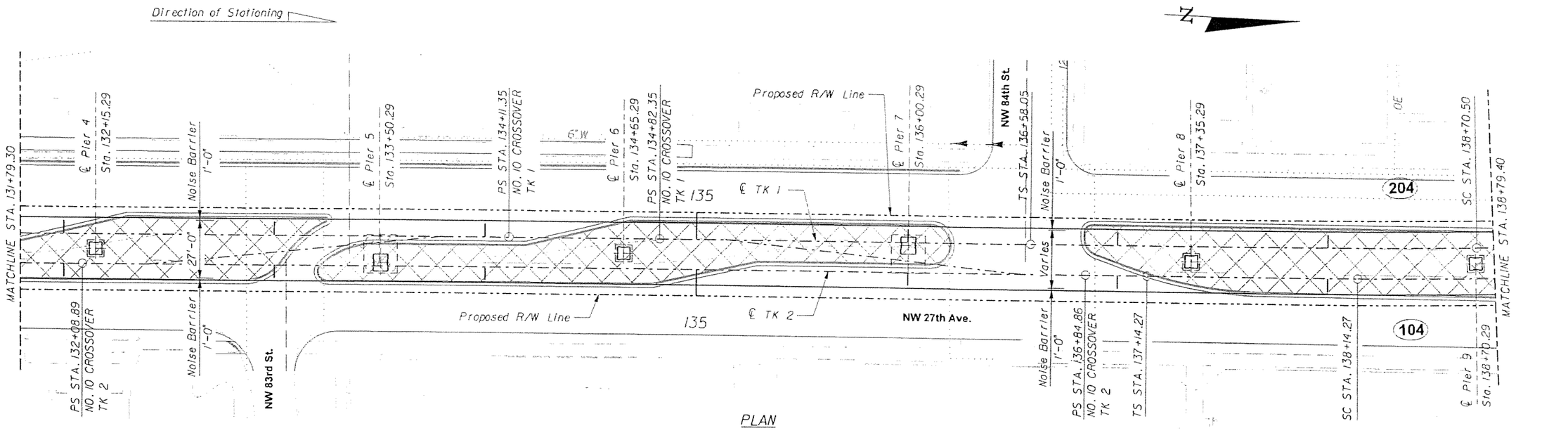

SUBJECT TO CHANGE

GTH Designed by	1-Nov-05 Date					
KDK Drawn by	5-May-06 Date					
JER Checked by	5-May-06 Date					
TWS Approved by	5-May-06 Date	No.	Date	By / Chk	App.	Revisions

NORTH CORRIDOR METRORAIL EXTENSION - PRELIMINARY ENGINEERING (100% SUBMITTAL)

MIAMI-DADE COUNTY

MIAMI-DADE TRANSIT

PARSONS
7600 CORPORATE CENTER DRIVE, SUITE 500
MIAMI, FLORIDA 33126
PHONE: (786) 464-1000 FAX: (786) 645-7119
CERTIFICATE OF AUTHORIZATION NO. 1838

Approved | Date | Approved | Date

STRUCTURES - GUIDEWAY (CONCRETE)

GENERAL PLAN AND ELEVATION 9

Scale 1" = 50' | Drawing SGC- 10 | Sheet 221

5/8/2006 5:25:04 PM g:\646331_north_corridor\cadd\dgn\new alignment\gpe-03.dgn

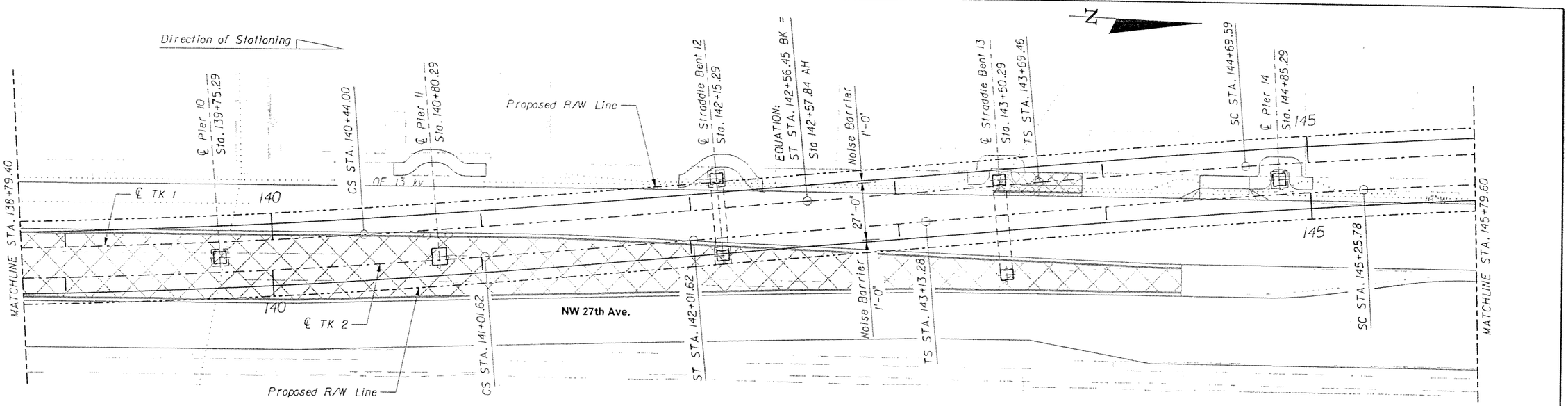

PLAN

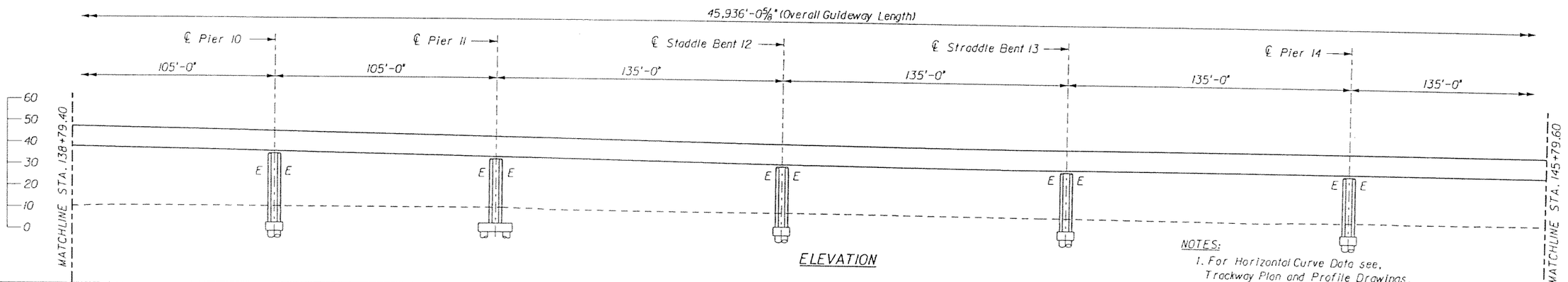

ELEVATION

NOTES:
1. For Horizontal Curve Data see, Trackway Plan and Profile Drawings.

SUBJECT TO CHANGE

GTH	1-Nov-05					
Designed by	Date					
KDK	5-May-06					
Drawn by	Date					
JER	5-May-06					
Checked by	Date					
TWS	5-May-06					
Approved by	Date	No.	Date	By / Chk	App.	Revisions

NORTH CORRIDOR METRORAIL EXTENSION - PRELIMINARY ENGINEERING (100% SUBMITTAL)

MIAMI-DADE COUNTY

MIAMI-DADE TRANSIT

PARSONS
7600 CORPORATE CENTER DRIVE, SUITE 500
MIAMI, FLORIDA 33126
PHONE: (786) 464-1000 FAX: (786) 845-7119
CERTIFICATE OF AUTHORIZATION NO. 1838

Approved | Date

Approved | Date

STRUCTURES - GUIDEWAY (CONCRETE)

GENERAL PLAN AND ELEVATION 10

Scale 1" = 50' | Drawing SGC- 11 | Sheet 222

5/8/2006 5:25:06 PM g:\646331_north_corridor\cadd\dgn\new alignment\gpe-04.dgn

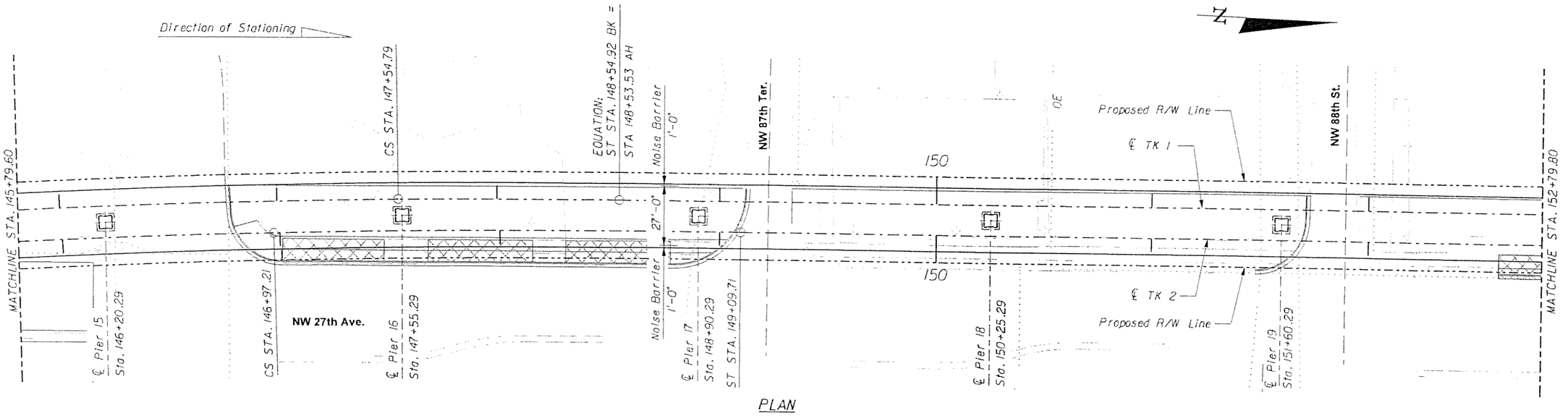

PLAN

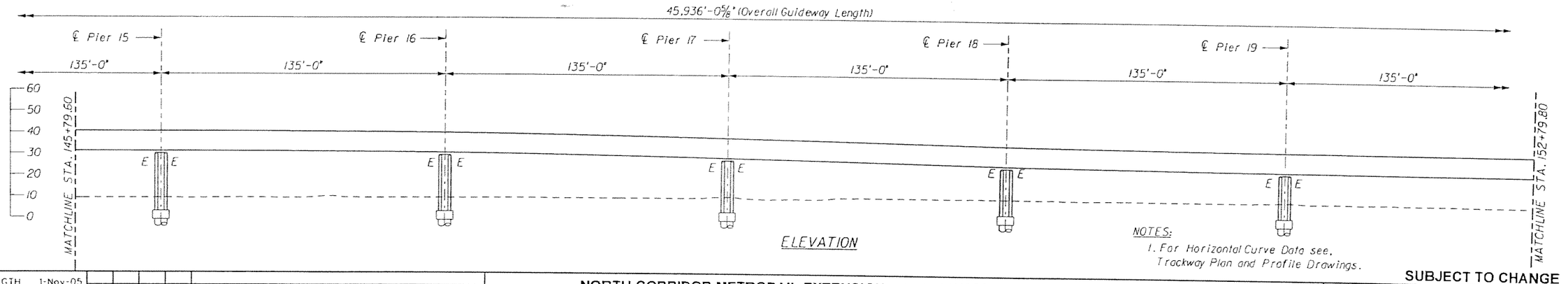

ELEVATION

NOTES:
1. For Horizontal Curve Data see, Trackway Plan and Profile Drawings.

SUBJECT TO CHANGE

GTH Designed by	1-Nov-05 Date				
KDK Drawn by	5-May-06 Date				
JER Checked by	5-May-06 Date				
TWS Approved by	5-May-06 Date	No.	Date	By / Chk	App.	Revisions

NORTH CORRIDOR METRORAIL EXTENSION - PRELIMINARY ENGINEERING (100% SUBMITTAL)

STRUCTURES - GUIDEWAY (CONCRETE)

MIAMI-DADE COUNTY

MIAMI-DADE TRANSIT

PARSONS
7600 CORPORATE CENTER DRIVE, SUITE 500
MIAMI, FLORIDA 33126
PHONE: (786) 464-1000 FAX: (786) 845-7119
CERTIFICATE OF AUTHORIZATION NO. 1836

Approved | Date | Approved | Date

GENERAL PLAN AND ELEVATION 11

Scale 1" = 50' | Drawing SGC- 12 | Sheet 223

5/8/2006 5:25:13 PM g:\646331_north_corridor\cadd\dgn\new alignment\gpe-05.dgn

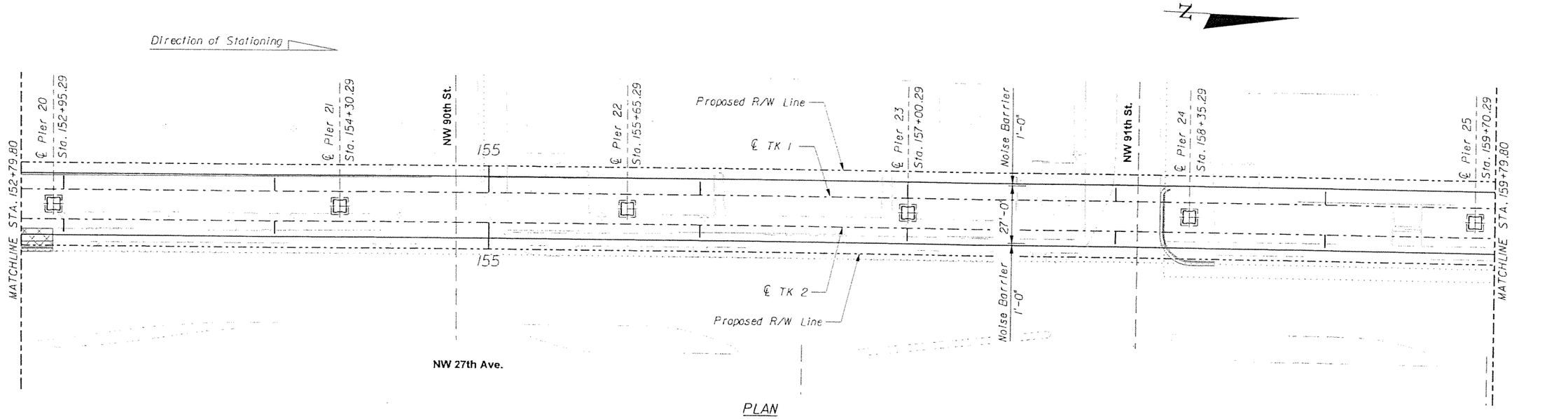

PLAN

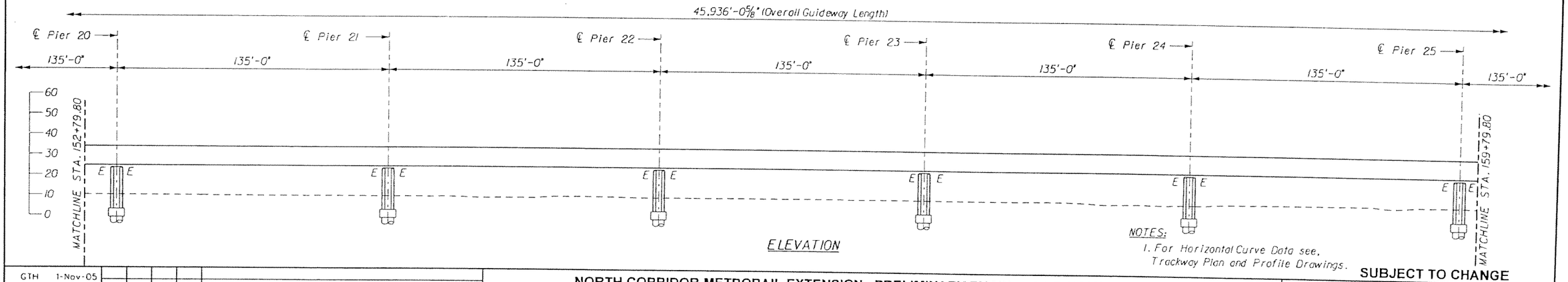

ELEVATION

NOTES:
1. For Horizontal Curve Data see, Trackway Plan and Profile Drawings.

SUBJECT TO CHANGE

GTH Designed by	1-Nov-05 Date					
KDK Drawn by	5-May-06 Date					
JER Checked by	5-May-06 Date					
TWS Approved by	5-May-06 Date	No.	Date	By / Chk	App.	Revisions

NORTH CORRIDOR METRORAIL EXTENSION - PRELIMINARY ENGINEERING (100% SUBMITTAL)

MIAMI-DADE COUNTY

MIAMI-DADE TRANSIT

PARSONS
7600 CORPORATE CENTER DRIVE, SUITE 500
MIAMI, FLORIDA 33126
PHONE: (786) 464-1000 FAX: (786) 845-7119
CERTIFICATE OF AUTHORIZATION NO. 1838

Approved | Date

Approved | Date

STRUCTURES - GUIDEWAY (CONCRETE)

GENERAL PLAN AND ELEVATION 12

Scale 1" = 50' | Drawing SGC- 13 | Sheet 224

5/8/2006 5:25:16 PM g:\646331_north_corridor\cadd\dgn\new alignment\gpe-06.dgn

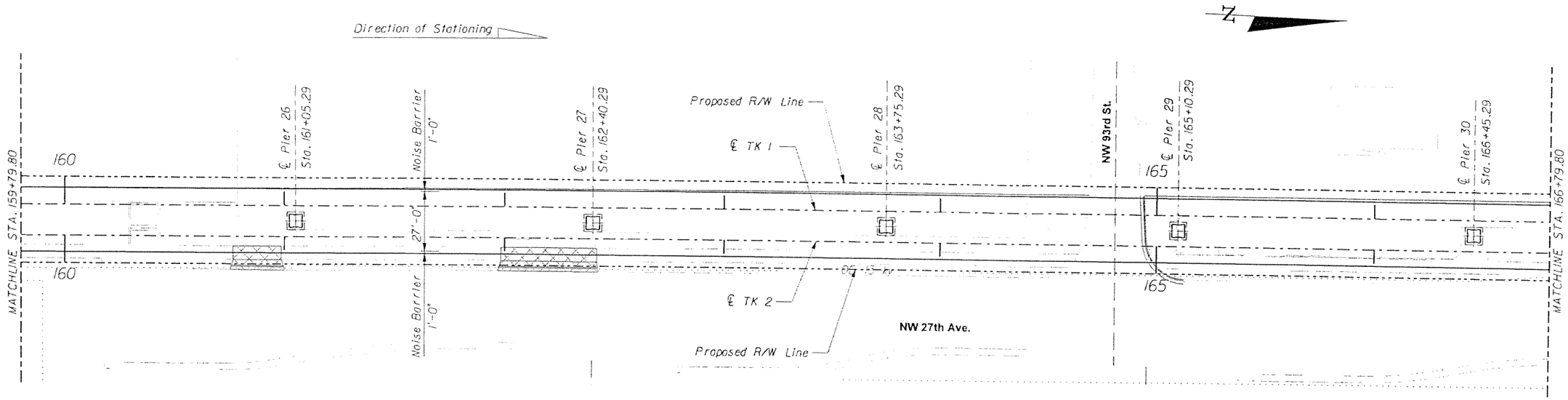

PLAN

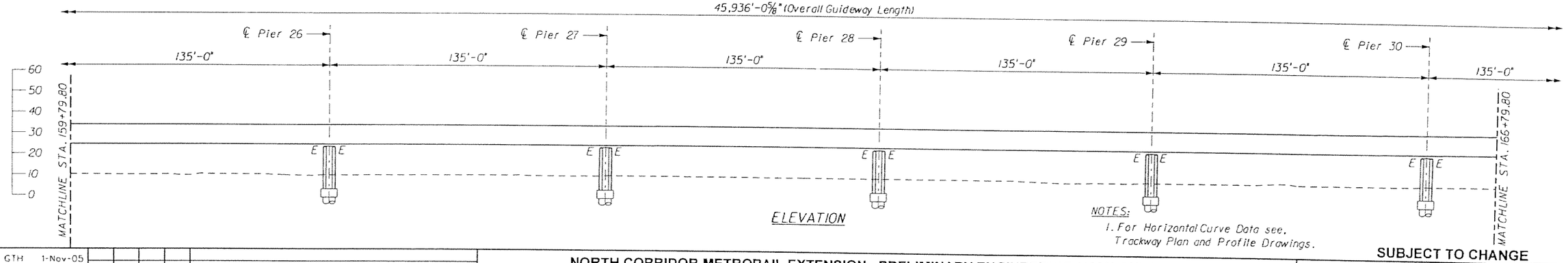

ELEVATION

NOTES:
1. For Horizontal Curve Data see, Trackway Plan and Profile Drawings.

SUBJECT TO CHANGE

GTH Designed by	1-Nov-05 Date				
KOK Drawn by	5-May-06 Date				
JER Checked by	5-May-06 Date				
TWS Approved by	5-May-06 Date	No.	Date	By / Chk	App. Revisions

NORTH CORRIDOR METRORAIL EXTENSION - PRELIMINARY ENGINEERING (100% SUBMITTAL)

MIAMI-DADE COUNTY

MIAMI-DADE TRANSIT

PARSONS
7600 CORPORATE CENTER DRIVE, SUITE 500
MIAMI, FLORIDA 33126
PHONE: (786) 464-1000 FAX: (786) 845-7119
CERTIFICATE OF AUTHORIZATION NO. 1838

Approved | Date | Approved | Date

STRUCTURES - GUIDEWAY (CONCRETE)

GENERAL PLAN AND ELEVATION 13

Scale 1" = 50' | Drawing SGC- 14 | Sheet 225

5/8/2006 5:25:18 PM g:\646331_north_corridor\cadd\dgn\new alignment\gpe-07.dgn

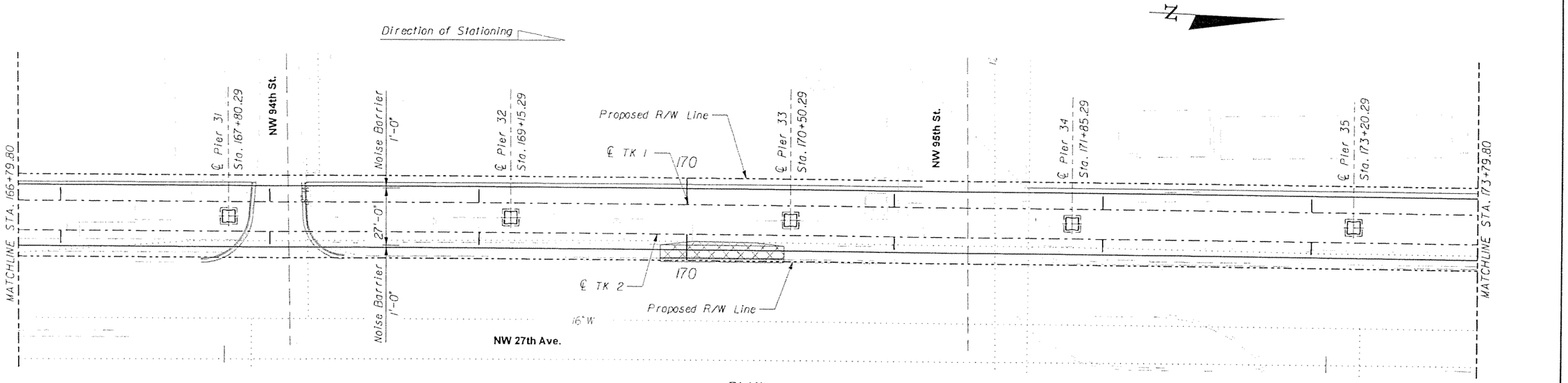

PLAN

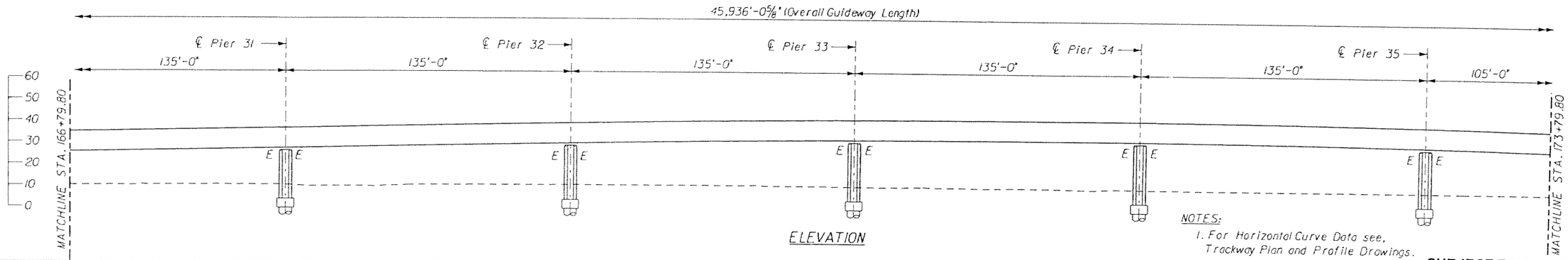

ELEVATION

NOTES:
1. For Horizontal Curve Data see, Trackway Plan and Profile Drawings.

SUBJECT TO CHANGE

GTH Designed by	1-Nov-05 Date					
KDK Drawn by	5-May-06 Date					
JER Checked by	5-May-06 Date					
TWS Approved by	5-May-06 Date	No.	Date	By / Chk	App.	Revisions

NORTH CORRIDOR METRORAIL EXTENSION - PRELIMINARY ENGINEERING (100% SUBMITTAL)

MIAMI-DADE COUNTY

MIAMI-DADE TRANSIT

PARSONS
7600 CORPORATE CENTER DRIVE, SUITE 500
MIAMI, FLORIDA 33126
PHONE: (786) 464-1000 FAX: (786) 845-7119
CERTIFICATE OF AUTHORIZATION NO. 1838

Approved | Date

Approved | Date

STRUCTURES - GUIDEWAY (CONCRETE)

GENERAL PLAN AND ELEVATION 14

Scale 1" = 50' | Drawing SGC- 15 | Sheet 226

5/8/2006 5:25:24 PM g:\646331_north_corridor\caddd\dgn\new alignment\gpe-08.dgn

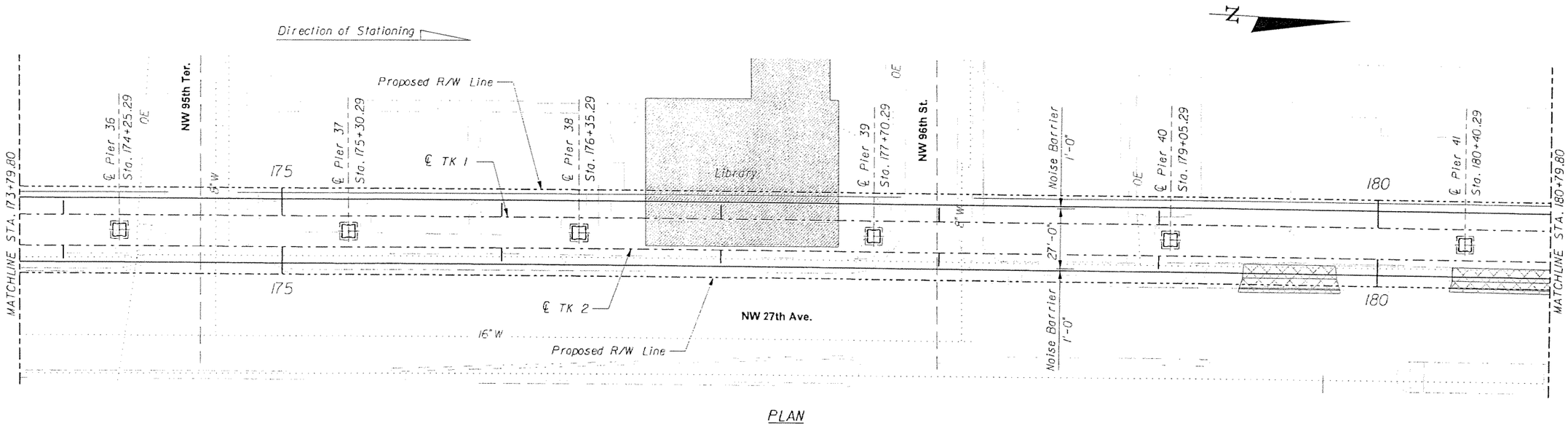

PLAN

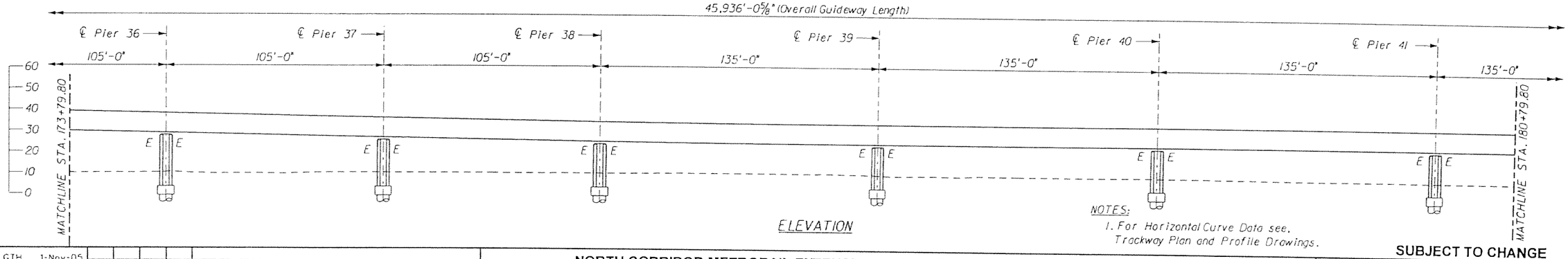

ELEVATION

NOTES:
1. For Horizontal Curve Data see, Trackway Plan and Profile Drawings.

SUBJECT TO CHANGE

GTH Designed by	1-Nov-05 Date					
KDK Drawn by	5-May-06 Date					
JER Checked by	5-May-06 Date					
TWS Approved by	5-May-06 Date	No.	Date	By / Chk	App.	Revisions

NORTH CORRIDOR METRORAIL EXTENSION - PRELIMINARY ENGINEERING (100% SUBMITTAL)

MIAMI-DADE COUNTY

MIAMI-DADE TRANSIT

PARSONS
7600 CORPORATE CENTER DRIVE, SUITE 500
MIAMI, FLORIDA 33126
PHONE: (786) 464-1000 FAX: (786) 845-7119
CERTIFICATE OF AUTHORIZATION NO. 1838

Approved Date

Approved Date

STRUCTURES - GUIDEWAY (CONCRETE)

GENERAL PLAN AND ELEVATION 15

Scale 1"=50' Drawing SGC- 16 Sheet 727

5/8/2006 5:25:27 PM g:\646331_north_corridor\cadd\dgn\new alignment\gpe-09.dgn

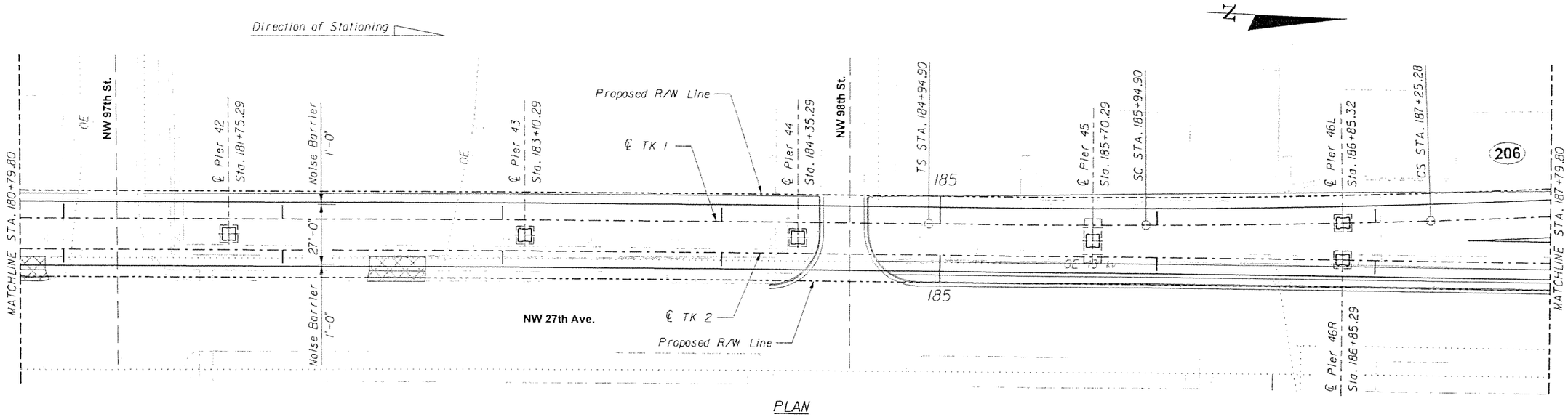

PLAN

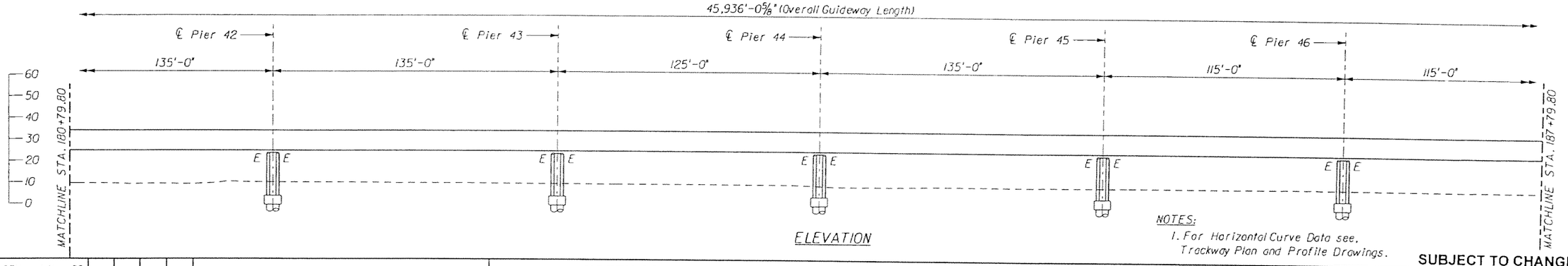

ELEVATION

NOTES:
1. For Horizontal Curve Data see, Trackway Plan and Profile Drawings.

SUBJECT TO CHANGE

GTH Designed by	1-Nov-05 Date					
KDK Drawn by	5-May-06 Date					
JER Checked by	5-May-06 Date					
TWS Approved by	5-May-06 Date	No.	Date	By / Chk	App.	Revisions

NORTH CORRIDOR METRORAIL EXTENSION - PRELIMINARY ENGINEERING (100% SUBMITTAL)

MIAMI-DADE COUNTY

MIAMI-DADE TRANSIT

PARSONS
7600 CORPORATE CENTER DRIVE, SUITE 500
MIAMI, FLORIDA 33126
PHONE: (786) 464-1000 FAX: (786) 845-7119
CERTIFICATE OF AUTHORIZATION NO. 1836

Approved | Date | Approved | Date

STRUCTURES - GUIDEWAY (CONCRETE)

GENERAL PLAN AND ELEVATION 16

Scale 1"=50' | Drawing SGC- 17 | Sheet 228

5/8/2006 5:25:33 PM g:\648331_north_corridor\cad\dgn\new alignment\gpe-10.dgn

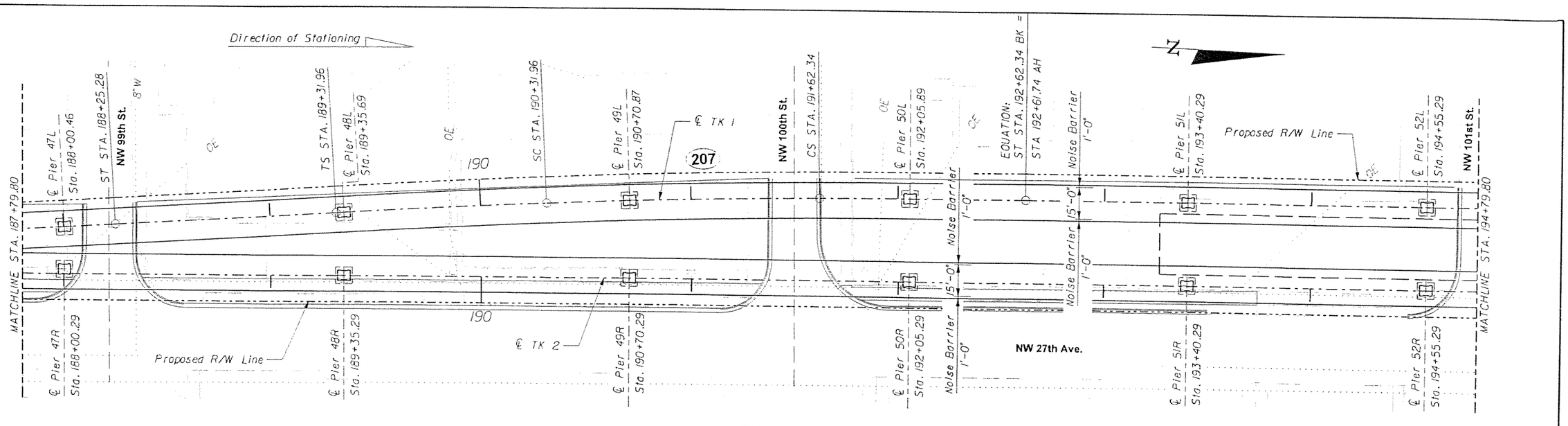

PLAN

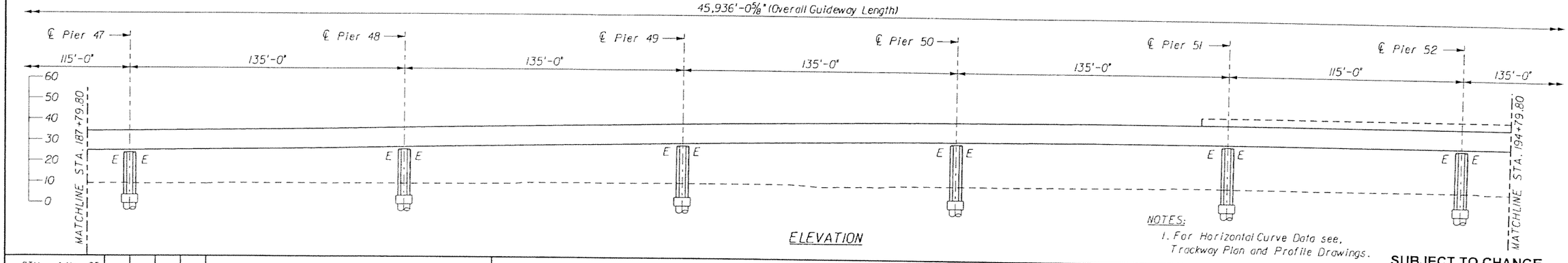

ELEVATION

NOTES:
1. For Horizontal Curve Data see, Trackway Plan and Profile Drawings.

SUBJECT TO CHANGE

GTH Designed by	1-Nov-05 Date				
KDK Drawn by	5-May-06 Date				
JER Checked by	5-May-06 Date				
TWS Approved by	5-May-06 Date	No.	Date	By / Chk	App. Revisions

NORTH CORRIDOR METRORAIL EXTENSION - PRELIMINARY ENGINEERING (100% SUBMITTAL)

MIAMI-DADE COUNTY

MIAMI-DADE TRANSIT

PARSONS
7800 CORPORATE CENTER DRIVE, SUITE 500
MIAMI, FLORIDA 33126
PHONE: (786) 464-1000 FAX: (786) 845-7119
CERTIFICATE OF AUTHORIZATION NO. 1838

Approved Date

Approved Date

STRUCTURES - GUIDEWAY (CONCRETE)

GENERAL PLAN AND ELEVATION 17

Scale 1" = 50' | Drawing SGC- 18 | Sheet 229

5/8/2006 5:25:38 PM g:\646331_north_corridor\cadd\dgn\new alignment\gpe-11.dgn

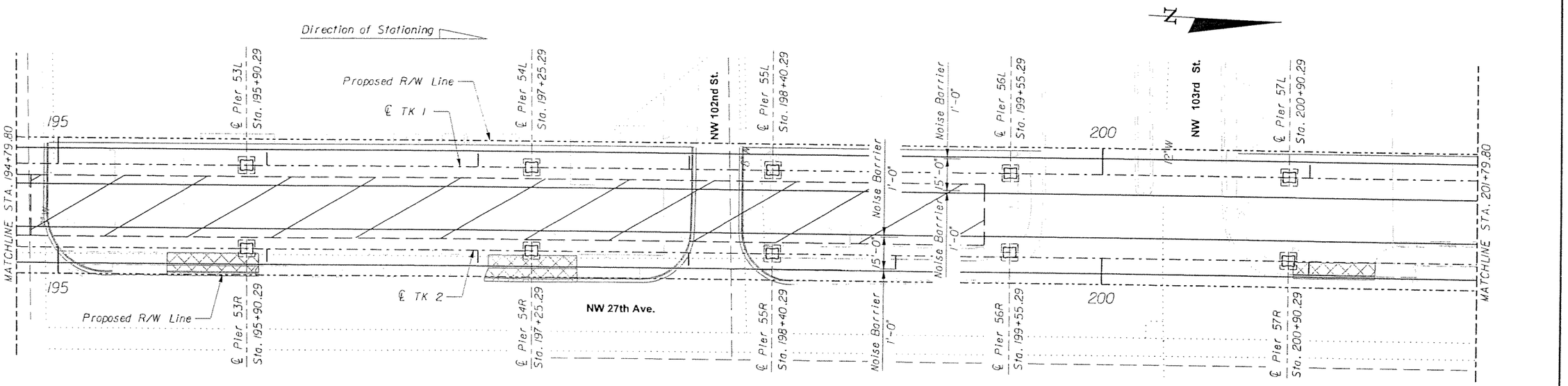

PLAN

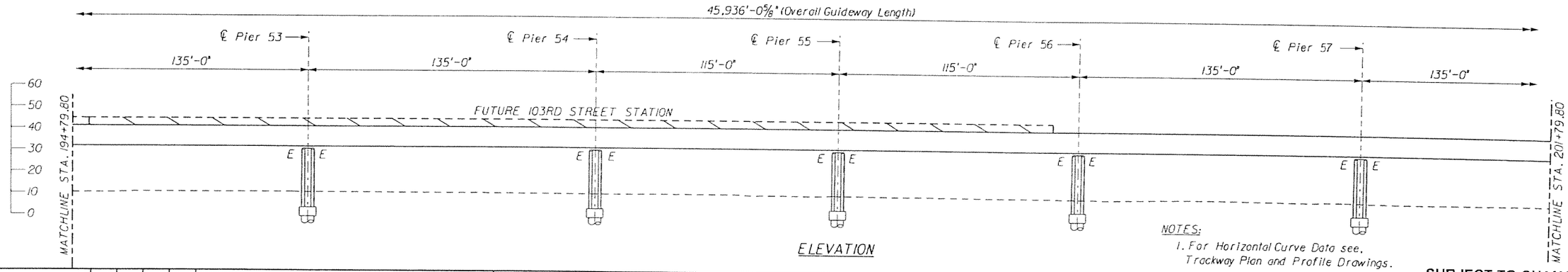

ELEVATION

NOTES:
1. For Horizontal Curve Data see, Trackway Plan and Profile Drawings.

SUBJECT TO CHANGE

GTH	1-Nov-05				
Designed by	Date				
KDK	5-May-06				
Drawn by	Date				
JER	5-May-06				
Checked by	Date				
TWS	5-May-06				
Approved by	Date	No.	Date	By / Chk	App.	Revisions

NORTH CORRIDOR METRORAIL EXTENSION - PRELIMINARY ENGINEERING (100% SUBMITTAL)

MIAMI-DADE COUNTY

MIAMI-DADE TRANSIT

PARSONS
7600 CORPORATE CENTER DRIVE, SUITE 500
MIAMI, FLORIDA 33126
PHONE: (786) 464-1000 FAX: (786) 845-7119
CERTIFICATE OF AUTHORIZATION NO. 1836

Approved | Date

Approved | Date

STRUCTURES - GUIDEWAY (CONCRETE)

GENERAL PLAN AND ELEVATION 18

Scale 1" = 50' | Drawing SGC- 19 | Sheet 230

5/8/2006 5:25:38 PM g:\646331_north_corridor\cadd\dgn\view alignment\gpe-12.dgn

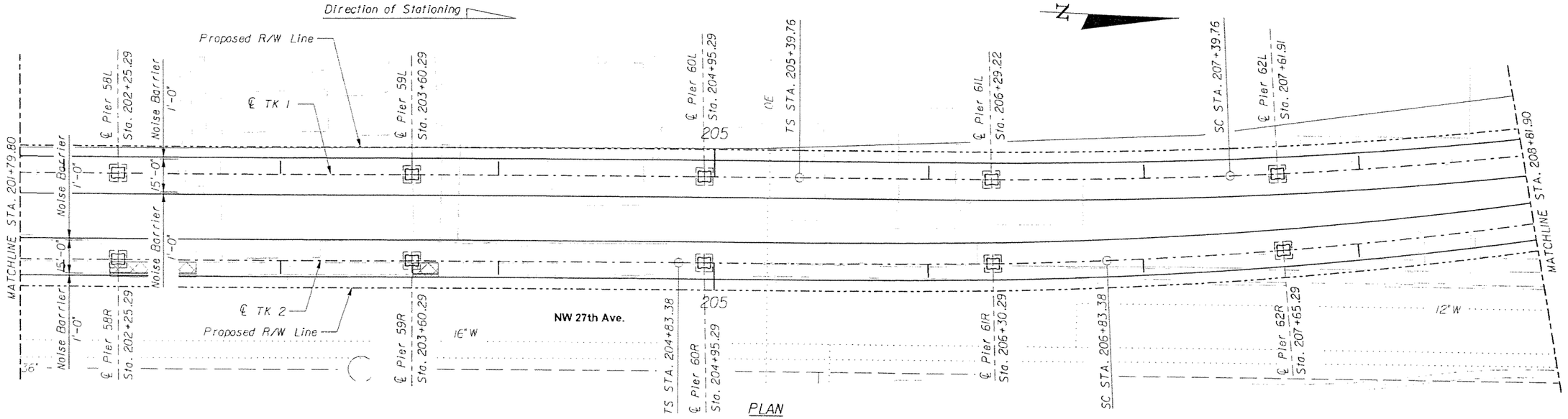

PLAN

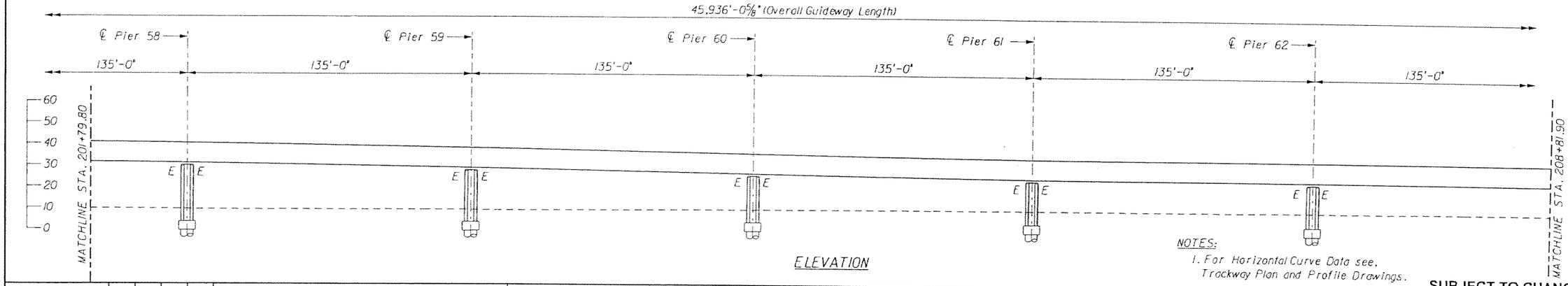

ELEVATION

NOTES:
1. For Horizontal Curve Data see, Trackway Plan and Profile Drawings.

SUBJECT TO CHANGE

GTH Designed by	1-Nov-05 Date				
KDK Drawn by	5-May-06 Date				
JER Checked by	5-May-06 Date				
TWS Approved by	5-May-06 Date	No.	Date	By / Chk	App.	Revisions

NORTH CORRIDOR METRORAIL EXTENSION - PRELIMINARY ENGINEERING (100% SUBMITTAL)

STRUCTURES - GUIDEWAY (CONCRETE)

MIAMI-DADE COUNTY

MIAMI-DADE TRANSIT

PARSONS
7600 CORPORATE CENTER DRIVE, SUITE 500
MIAMI, FLORIDA 33126
PHONE: (786) 464-1000 FAX: (786) 845-7119
CERTIFICATE OF AUTHORIZATION NO. 1838

Approved | Date | Approved | Date

GENERAL PLAN AND ELEVATION 19

Scale 1" = 50' | Drawing SGC- 20 | Sheet 231

5/8/2006 5:25:45 PM g:\646331_north_corridor\cadd\dgn\new alignment\gpe-13.dgn

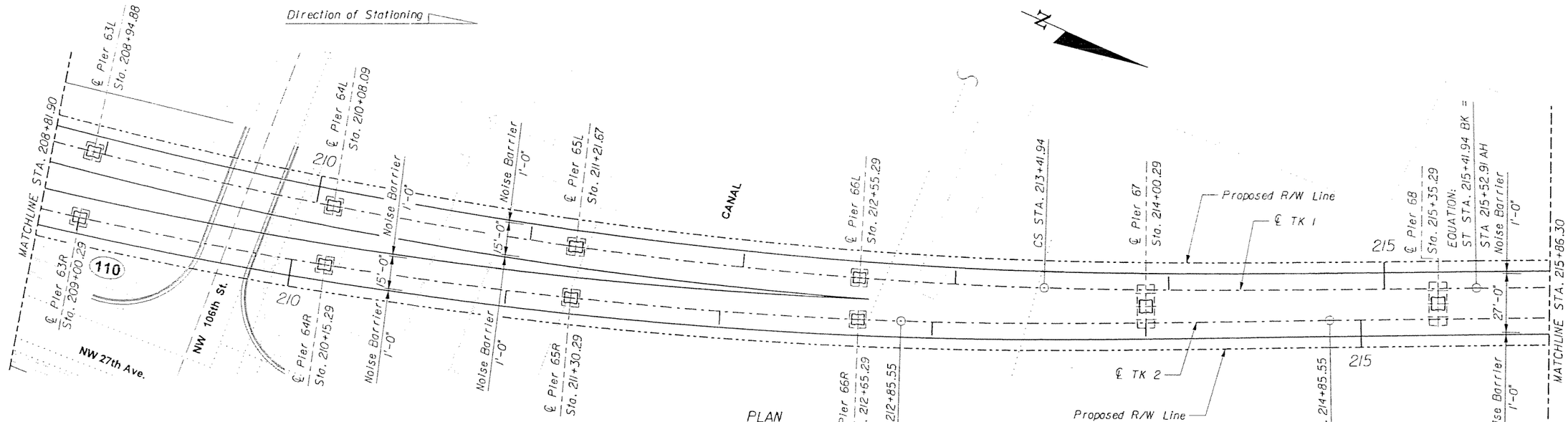

SUBJECT TO CHANGE

GTH Designed by	1-Nov-05 Date					
KDK Drawn by	5-May-06 Date					
JER Checked by	5-May-06 Date					
TWS Approved by	5-May-06 Date	No.	Date	By / Chk	App.	Revisions

NORTH CORRIDOR METRORAIL EXTENSION - PRELIMINARY ENGINEERING (100% SUBMITTAL)

STRUCTURES - GUIDEWAY (CONCRETE)

MIAMI-DADE COUNTY

MIAMI-DADE TRANSIT

PARSONS
7600 CORPORATE CENTER DRIVE, SUITE 500
MIAMI, FLORIDA 33126
PHONE: (786) 464-1000 FAX: (786) 845-7119
CERTIFICATE OF AUTHORIZATION NO. 1838

Approved | Date

Approved | Date

GENERAL PLAN AND ELEVATION 20

Scale 1"=50' | Drawing SGC- 21 | Sheet 232

5/8/2006 5:25:47 PM g:\646331_north_corridor\cadd\dgn\new alignment\gpe-14.dgn

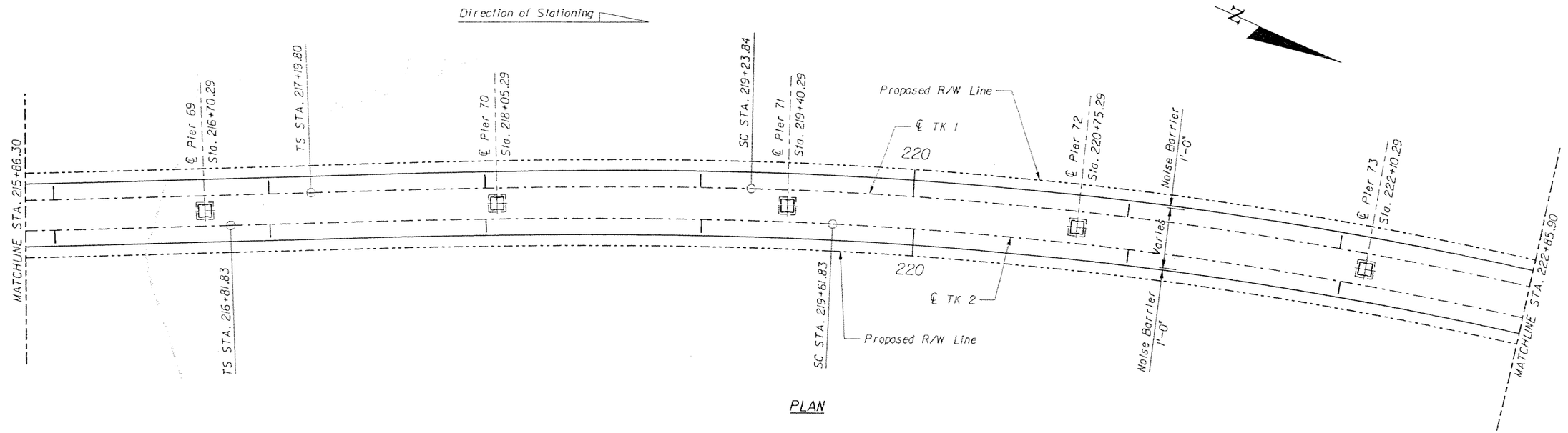

PLAN

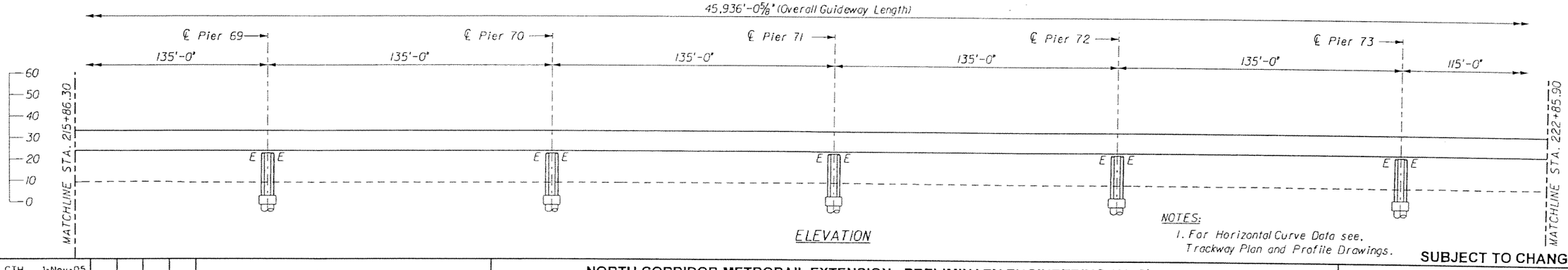

ELEVATION

NOTES:
1. For Horizontal Curve Data see, Trackway Plan and Profile Drawings.

SUBJECT TO CHANGE

GTH Designed by	1-Nov-05 Date					
KDK Drawn by	5-May-06 Date					
JER Checked by	5-May-06 Date					
TWS Approved by	5-May-06 Date	No.	Date	By / Chk	App.	Revisions

NORTH CORRIDOR METRORAIL EXTENSION - PRELIMINARY ENGINEERING (100% SUBMITTAL)

STRUCTURES - GUIDEWAY (CONCRETE)

MIAMI-DADE COUNTY

MIAMI-DADE TRANSIT

PARSONS
7600 CORPORATE CENTER DRIVE, SUITE 500
MIAMI, FLORIDA 33126
PHONE: (786) 464-1000 FAX: (786) 545-7119
CERTIFICATE OF AUTHORIZATION NO. 1838

Approved | Date

Approved | Date

GENERAL PLAN AND ELEVATION 21

Scale 1" = 50' | Drawing SGC- 22 | Sheet 233

5/8/2006 5:25:53 PM g:\646331_north_corridor\cadd\dgn\new alignment\gpe-15.dgn

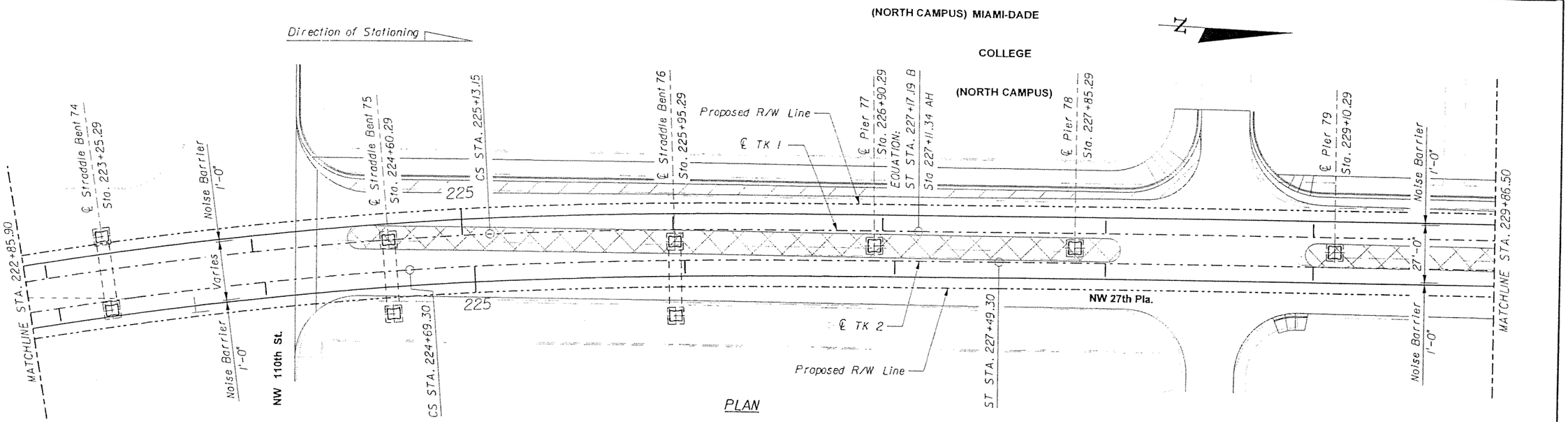

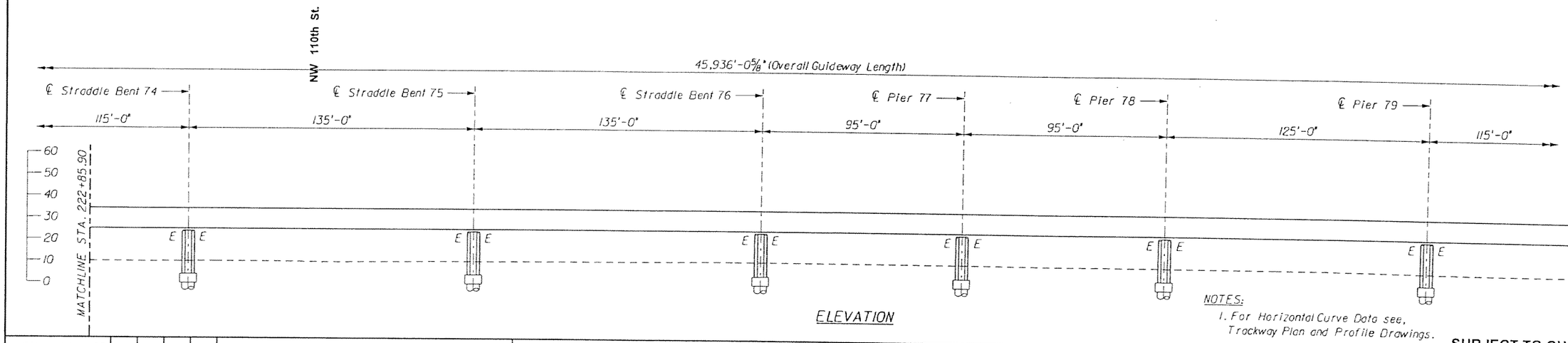

NOTES:
1. For Horizontal Curve Data see, Trackway Plan and Profile Drawings.

SUBJECT TO CHANGE

GTH Designed by	1-Nov-05 Date					
KDK Drawn by	5-May-06 Date					
JER Checked by	5-May-06 Date					
TWS Approved by	5-May-06 Date	No.	Date	By / Chk	App.	Revisions

NORTH CORRIDOR METRORAIL EXTENSION - PRELIMINARY ENGINEERING (100% SUBMITTAL)

MIAMI-DADE COUNTY

MIAMI-DADE TRANSIT

PARSONS
7500 CORPORATE CENTER DRIVE, SUITE 500
MIAMI, FLORIDA 33126
PHONE: (786) 464-1000 FAX: (786) 845-7119
CERTIFICATE OF AUTHORIZATION NO. 1838

Approved | Date | Approved | Date

STRUCTURES - GUIDEWAY (CONCRETE)

GENERAL PLAN AND ELEVATION 22

Scale 1"=50' | Drawing SGC- 23 | Sheet 234

5/8/2006 5:25:56 PM g:\646331_north_corridor\cadd\dgn\view alignment\type-16.dgn

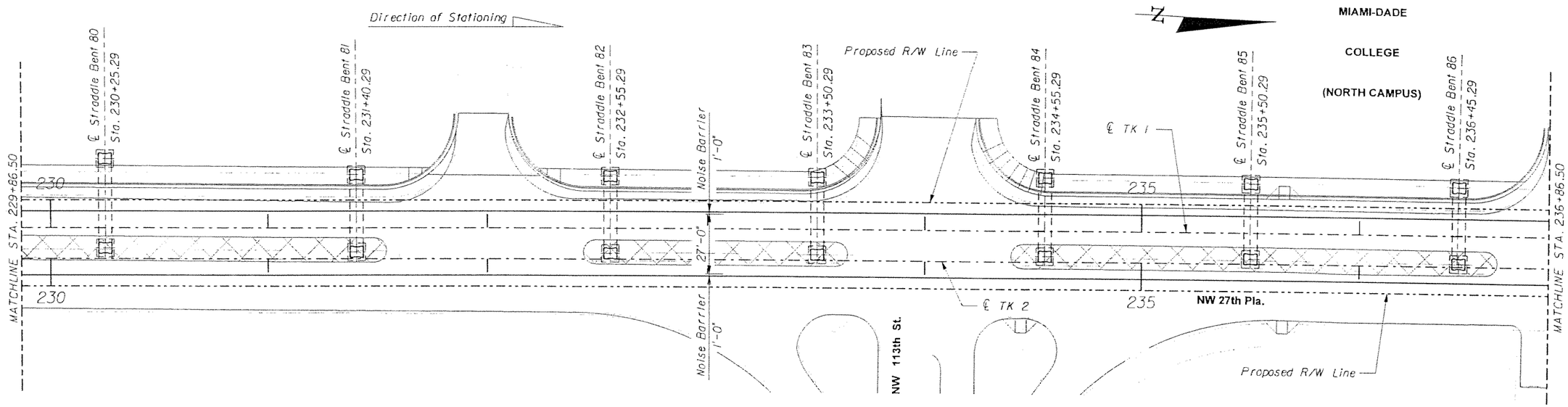

PLAN

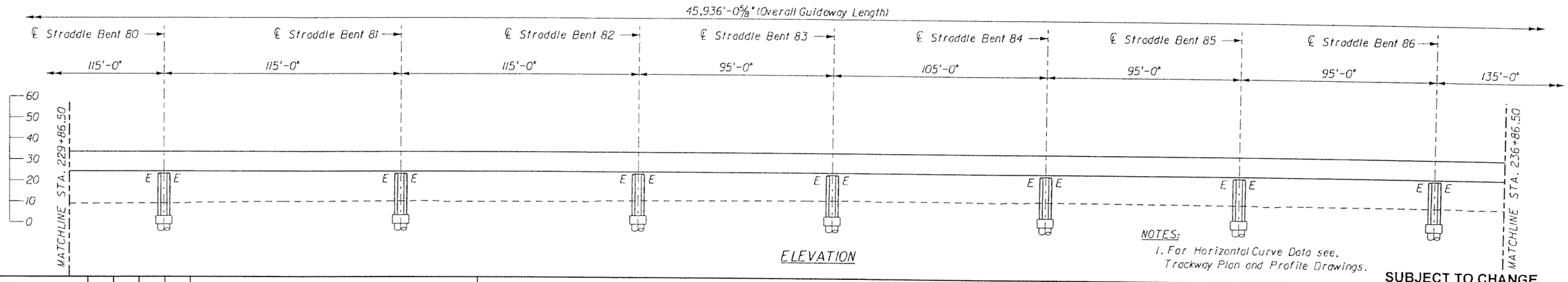

ELEVATION

NOTES:
1. For Horizontal Curve Data see, Trackway Plan and Profile Drawings.

SUBJECT TO CHANGE

GTH Designed by	1-Nov-05 Date					
KDK Drawn by	5-May-06 Date					
JER Checked by	5-May-06 Date					
TWS Approved by	5-May-06 Date	No.	Date	By / Chk	App.	Revisions

NORTH CORRIDOR METRORAIL EXTENSION - PRELIMINARY ENGINEERING (100% SUBMITTAL)

STRUCTURES - GUIDEWAY (CONCRETE)

MIAMI-DADE COUNTY

MIAMI-DADE TRANSIT

PARSONS
7600 CORPORATE CENTER DRIVE, SUITE 500
MIAMI, FLORIDA 33126
PHONE: (786) 454-1000 FAX: (786) 845-7119
CERTIFICATE OF AUTHORIZATION NO. 1838

GENERAL PLAN AND ELEVATION 23

Approved | Date | Approved | Date

Scale 1"=50' | Drawing SGC- 24 | Sheet 235

5/8/2006 5:25:58 PM g:\646331_north_corridor\cadd\dgn\new alignment\gpe-17.dgn

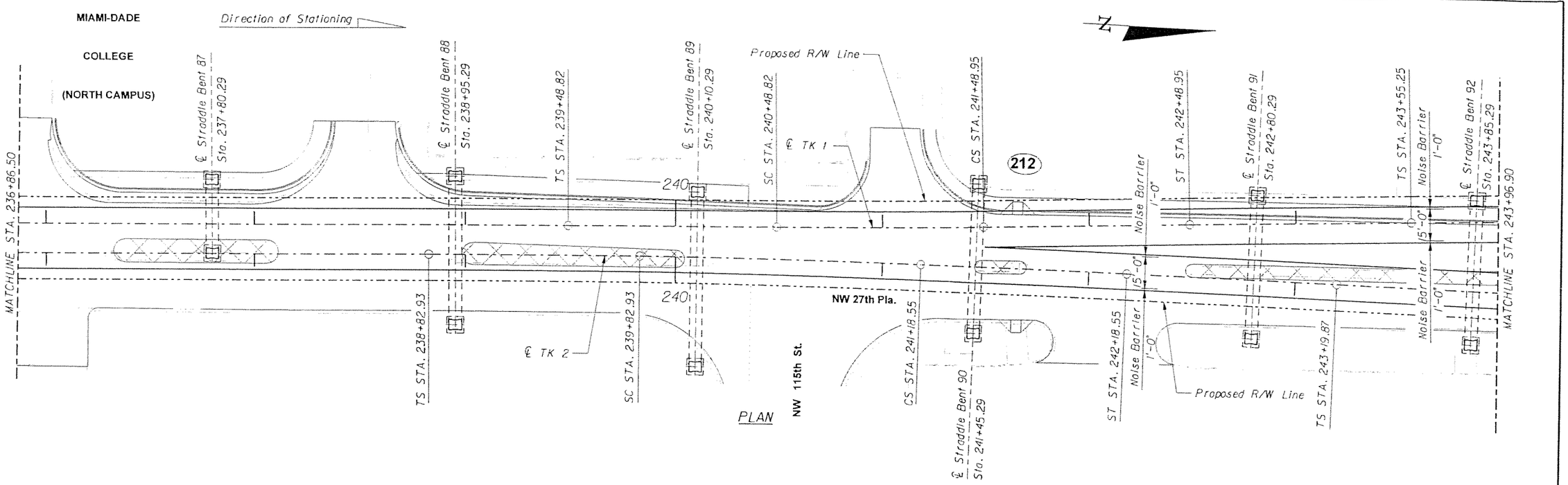

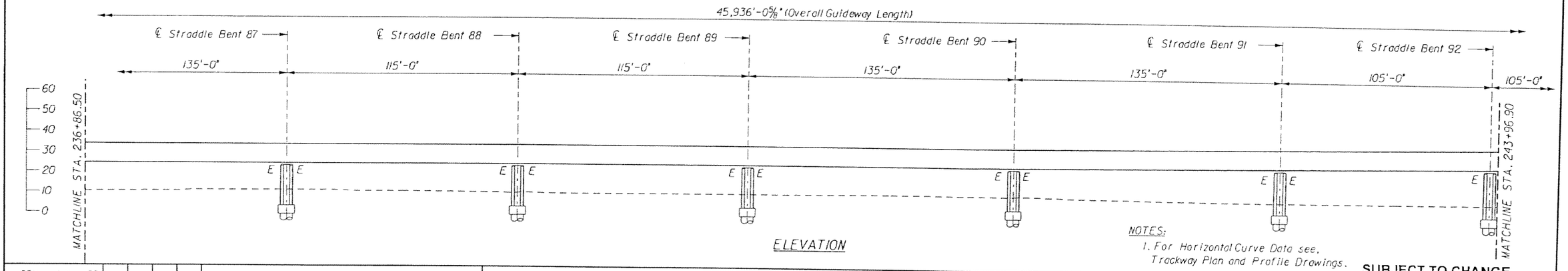

NOTES:
1. For Horizontal Curve Data see, Trackway Plan and Profile Drawings.

SUBJECT TO CHANGE

GTH Designed by	1-Nov-05 Date					
KDK Drawn by	5-May-06 Date					
JER Checked by	5-May-06 Date					
TWS Approved by	5-May-06 Date	No.	Date	By / Chk	App.	Revisions

NORTH CORRIDOR METRORAIL EXTENSION - PRELIMINARY ENGINEERING (100% SUBMITTAL)

STRUCTURES - GUIDEWAY (CONCRETE)

MIAMI-DADE COUNTY

MIAMI-DADE TRANSIT

PARSONS
7500 CORPORATE CENTER DRIVE, SUITE 500
MIAMI, FLORIDA 33126
PHONE: (786) 464-1000 FAX: (786) 845-7119
CERTIFICATE OF AUTHORIZATION NO. 1838

Approved | Date | Approved | Date

GENERAL PLAN AND ELEVATION 24

Scale 1" = 50' | Drawing SGC- 25 | Sheet 236

5/8/2006 5:26:04 PM g:\646331_north_corridor\caddd\gn\new alignment\gpe-18.dgn

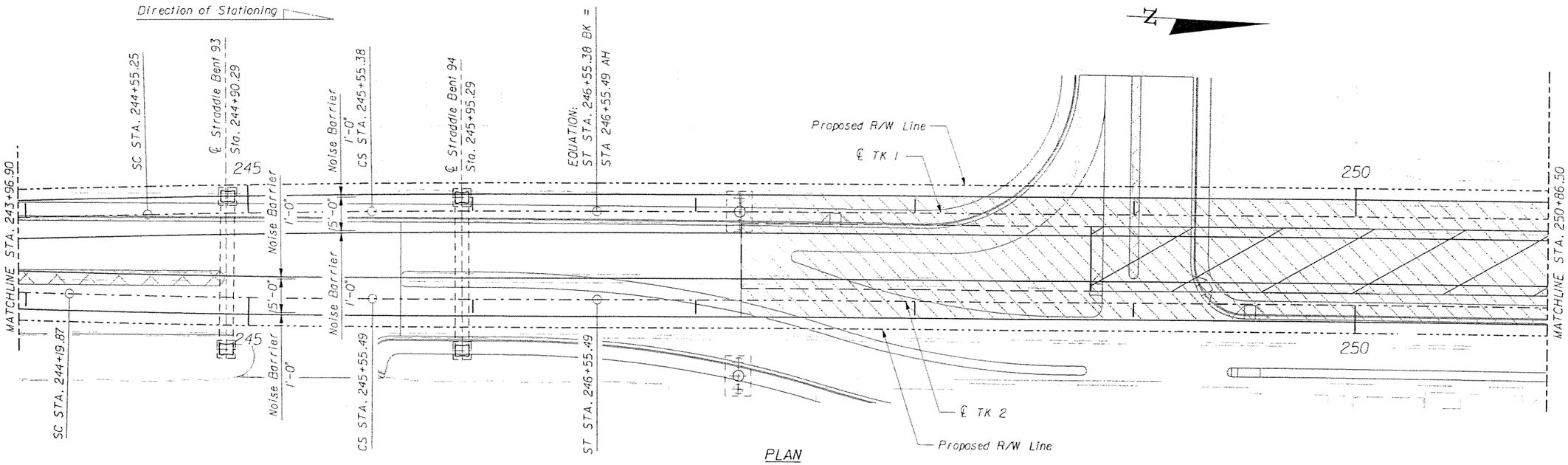

PLAN

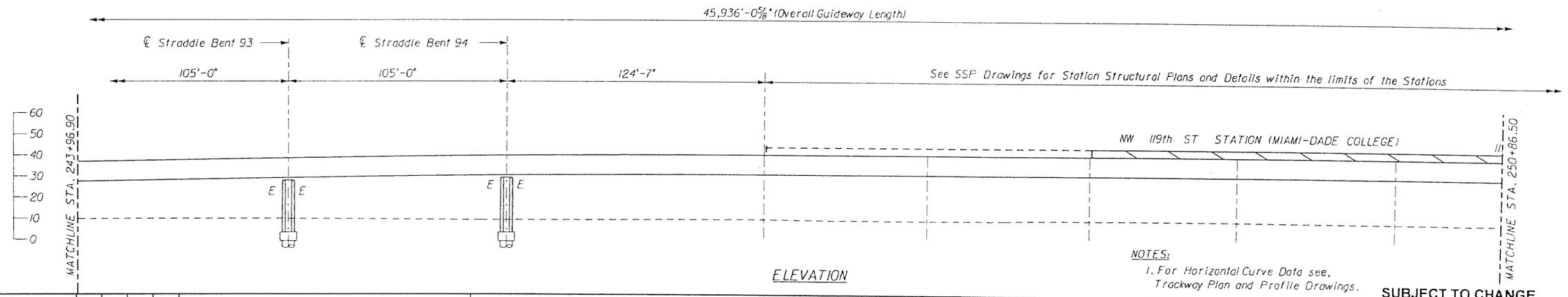

ELEVATION

NOTES:

1. For Horizontal Curve Data see, Trackway Plan and Profile Drawings.

SUBJECT TO CHANGE

GTH Designed by	1-Nov-05 Date				
KDK Drawn by	5-May-06 Date				
JER Checked by	5-May-06 Date				
TWS Approved by	5-May-06 Date	No.	Date	By / Chk	App.	Revisions

NORTH CORRIDOR METRORAIL EXTENSION - PRELIMINARY ENGINEERING (100% SUBMITTAL)

STRUCTURES - GUIDEWAY (CONCRETE)

MIAMI-DADE COUNTY

MIAMI-DADE TRANSIT

PARSONS
7600 CORPORATE CENTER DRIVE, SUITE 500
MIAMI, FLORIDA 33126
PHONE: (786) 464-1000 FAX: (786) 845-7119
CERTIFICATE OF AUTHORIZATION NO. 1838

Approved | Date | Approved | Date

GENERAL PLAN AND ELEVATION 25

Scale 1"=50' | Drawing SGC- 25 | Sheet 237

5/8/2006 5:26:07 PM g:\546331_north_corridor\cadd\dgn\new alignment\gpe-15.dgn

MIAMI-DADE

COLLEGE

(NORTH CAMPUS)

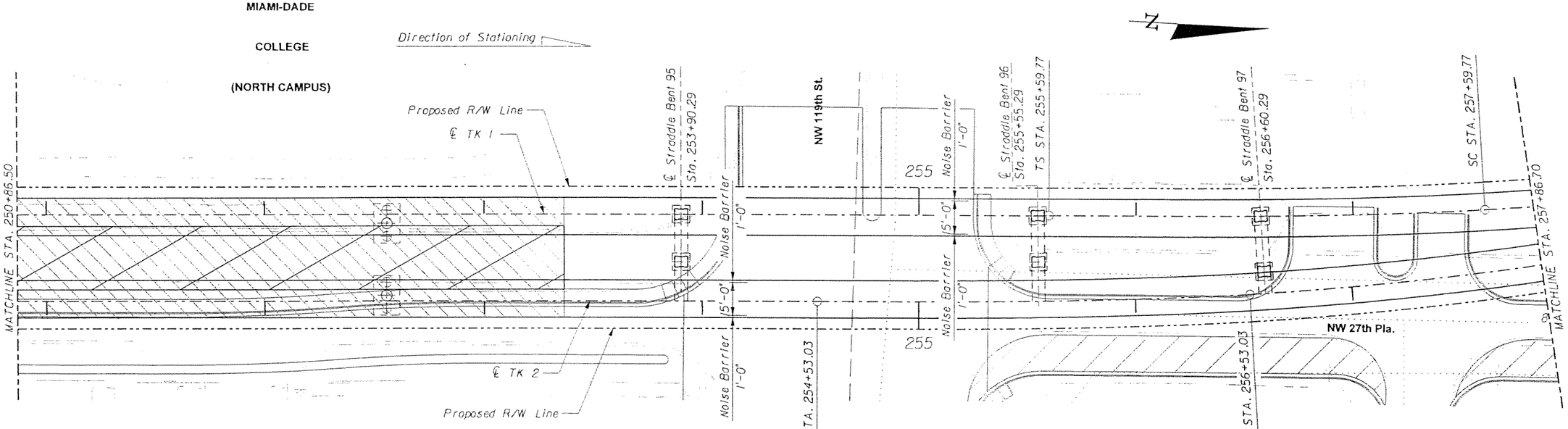

PLAN

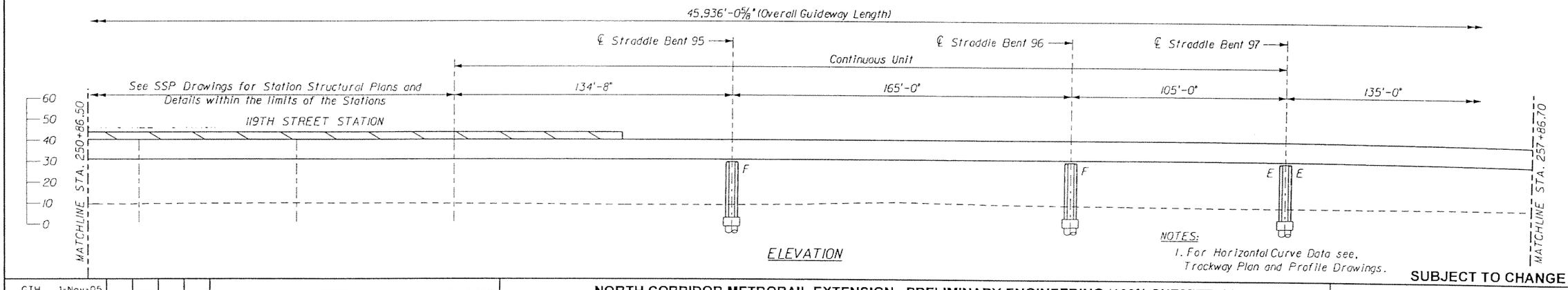

ELEVATION

NOTES:

1. For Horizontal Curve Data see, Trackway Plan and Profile Drawings.

SUBJECT TO CHANGE

GTH	1-Nov-05					
Designed by	Date					
KDK	5-May-06					
Drawn by	Date					
JER	5-May-06					
Checked by	Date					
TWS	5-May-06					
Approved by	Date	No.	Date	By / Chk	App.	Revisions

NORTH CORRIDOR METRORAIL EXTENSION - PRELIMINARY ENGINEERING (100% SUBMITTAL)

STRUCTURES - GUIDEWAY (CONCRETE)

MIAMI-DADE COUNTY

MIAMI-DADE TRANSIT

PARSONS
7600 CORPORATE CENTER DRIVE, SUITE 500
MIAMI, FLORIDA 33126
PHONE: (786) 464-1000 FAX: (786) 845-7119
CERTIFICATE OF AUTHORIZATION NO. 1838

Approved | Date | Approved | Date

GENERAL PLAN AND ELEVATION 26

Scale 1" = 50' | Drawing SGC- 27 | Sheet 238

5/8/2006 5:26:13 PM g:\646331_north_corridor\caddd\dgn\new alignment\gpe-26.dgn

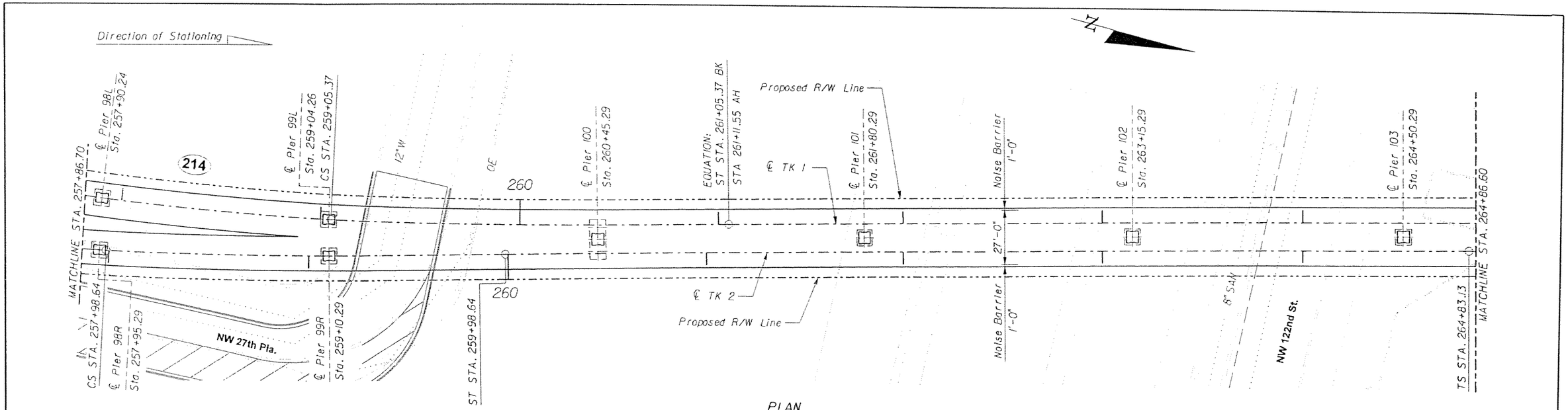

PLAN

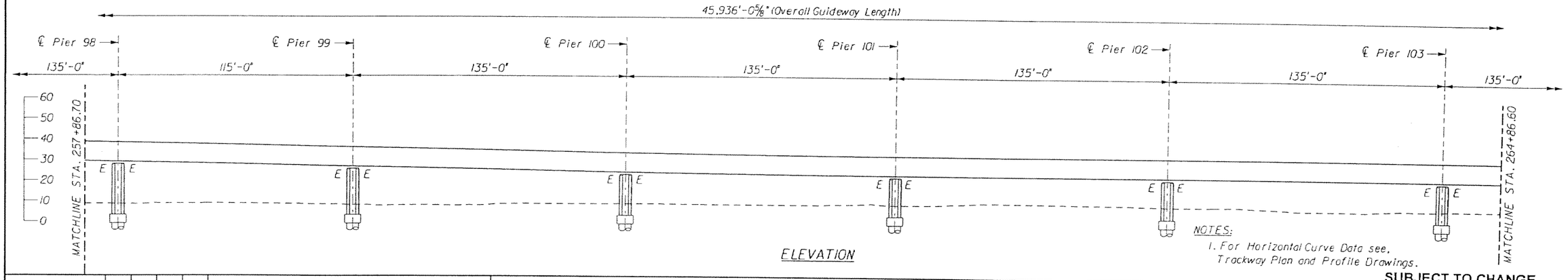

ELEVATION

NOTES:
1. For Horizontal Curve Data see, Trackway Plan and Profile Drawings.

SUBJECT TO CHANGE

GTH	1-Nov-05				
Designed by	Date				
KDK	5-May-06				
Drawn by	Date				
JER	5-May-06				
Checked by	Date				
TWS	5-May-06				
Approved by	Date	No.	Date	By / Chk	App.	Revisions

NORTH CORRIDOR METRORAIL EXTENSION - PRELIMINARY ENGINEERING (100% SUBMITTAL)

MIAMI-DADE COUNTY

MIAMI-DADE TRANSIT

PARSONS
7600 CORPORATE CENTER DRIVE, SUITE 500
MIAMI, FLORIDA 33126
PHONE: (786) 464-1000 FAX: (786) 845-7119
CERTIFICATE OF AUTHORIZATION NO. 1838

Approved | Date

Approved | Date

STRUCTURES - GUIDEWAY (CONCRETE)

GENERAL PLAN AND ELEVATION 27

Scale 1" = 50' | Drawing SGC- 28 | Sheet 239

5/8/2006 5:26:15 PM g:\645331_north_corridor\caddd\dgn\new alignment\gpe-21.dgn

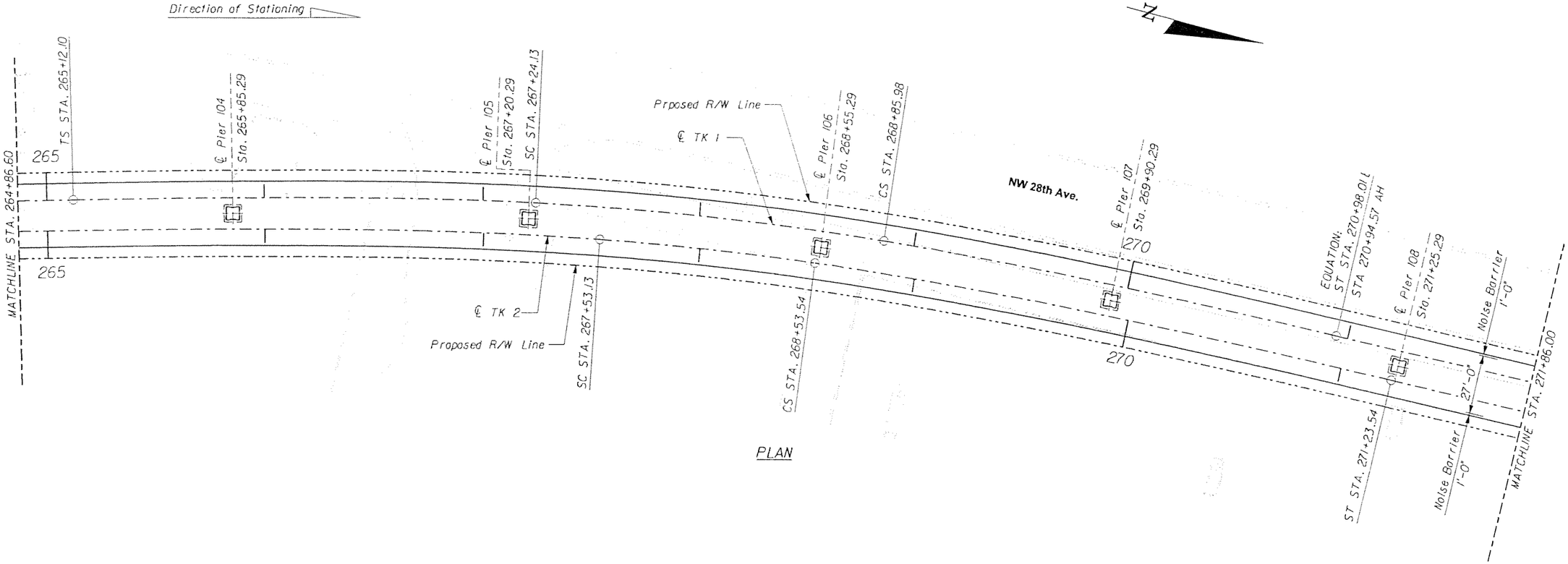

PLAN

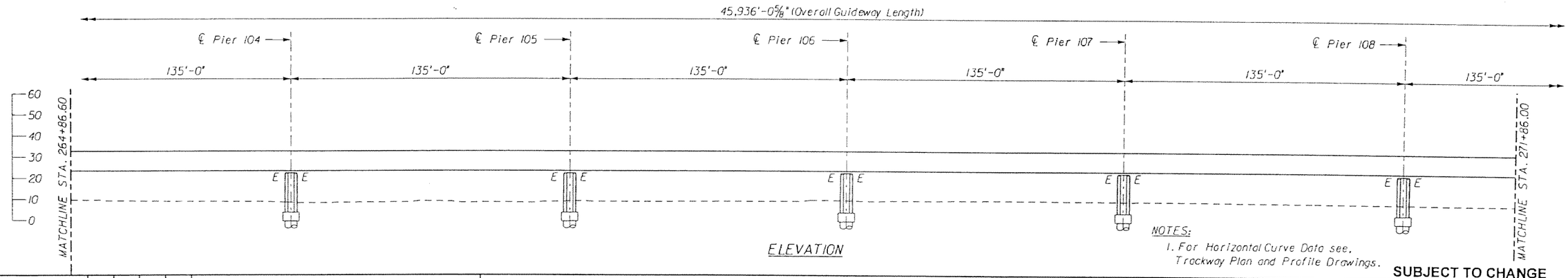

ELEVATION

NOTES:
1. For Horizontal Curve Data see, Trackway Plan and Profile Drawings.

SUBJECT TO CHANGE

GTH Designed by	1-Nov-05 Date					
KDK Drawn by	5-May-06 Date					
JER Checked by	5-May-06 Date					
TWS Approved by	5-May-06 Date	No.	Date	By / Chk	App.	Revisions

NORTH CORRIDOR METRORAIL EXTENSION - PRELIMINARY ENGINEERING (100% SUBMITTAL)

STRUCTURES - GUIDEWAY (CONCRETE)

MIAMI-DADE COUNTY

MIAMI-DADE TRANSIT

PARSONS
7600 CORPORATE CENTER DRIVE, SUITE 500
MIAMI, FLORIDA 33126
PHONE: (786) 464-1000 FAX: (786) 845-7119
CERTIFICATE OF AUTHORIZATION NO. 1838

Approved | Date

Approved | Date

GENERAL PLAN AND ELEVATION 28

Scale 1" = 50' | Drawing SGC- 29 | Sheet 240

5/8/2006 5:26:18 PM g:\646331_north_corridor\cadd\dgn\new alignment\gpe-22.dgn

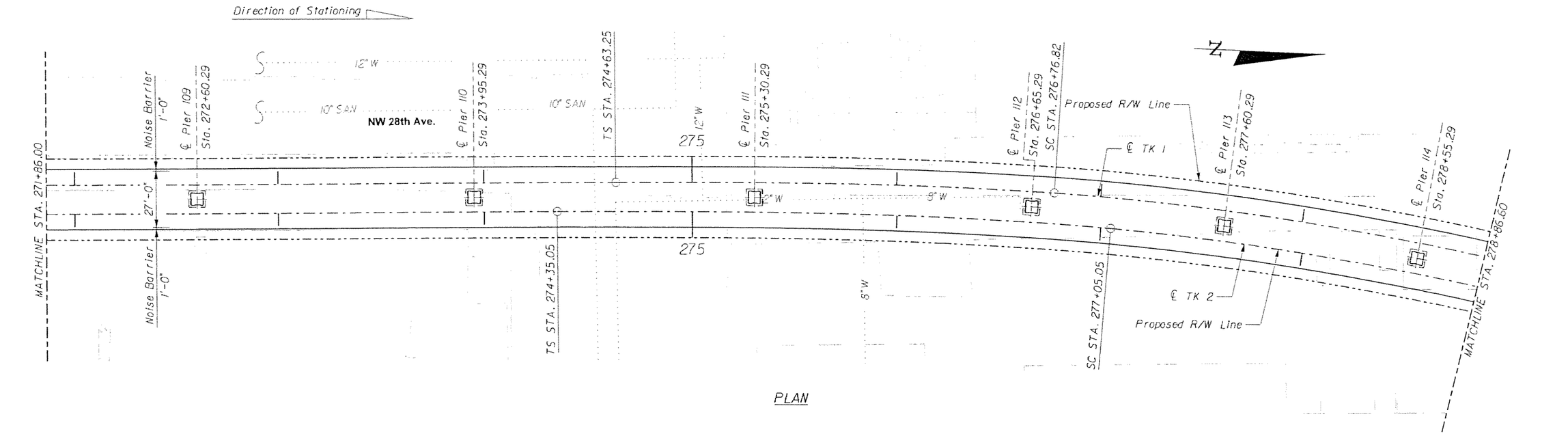

PLAN

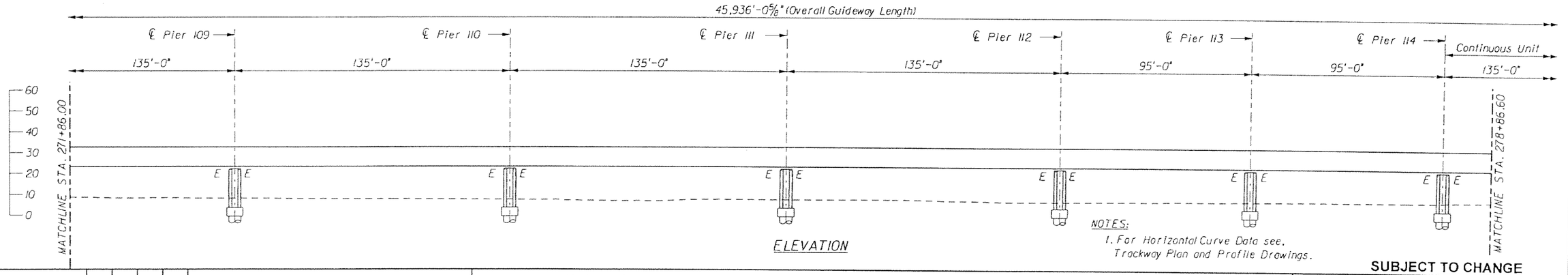

ELEVATION

NOTES:
1. For Horizontal Curve Data see, Trackway Plan and Profile Drawings.

SUBJECT TO CHANGE

GTH Designed by	1-Nov-05 Date					
KDK Drawn by	5-May-06 Date					
JER Checked by	5-May-06 Date					
TWS Approved by	5-May-06 Date	No.	Date	By / Chk	App.	Revisions

NORTH CORRIDOR METRORAIL EXTENSION - PRELIMINARY ENGINEERING (100% SUBMITTAL)

STRUCTURES - GUIDEWAY (CONCRETE)

MIAMI-DADE COUNTY

MIAMI-DADE TRANSIT

PARSONS
7600 CORPORATE CENTER DRIVE, SUITE 500
MIAMI, FLORIDA 33126
PHONE: (786) 464-1000 FAX: (786) 845-7119
CERTIFICATE OF AUTHORIZATION NO. 1838

Approved | Date | Approved | Date

GENERAL PLAN AND ELEVATION 29

Scale 1" = 50' | Drawing SGC- 30 | Sheet 24

5/8/2006 5:26:24 PM g:\646331_north_corridor\cadd\dgn\new alignment\gpe-23.dgn

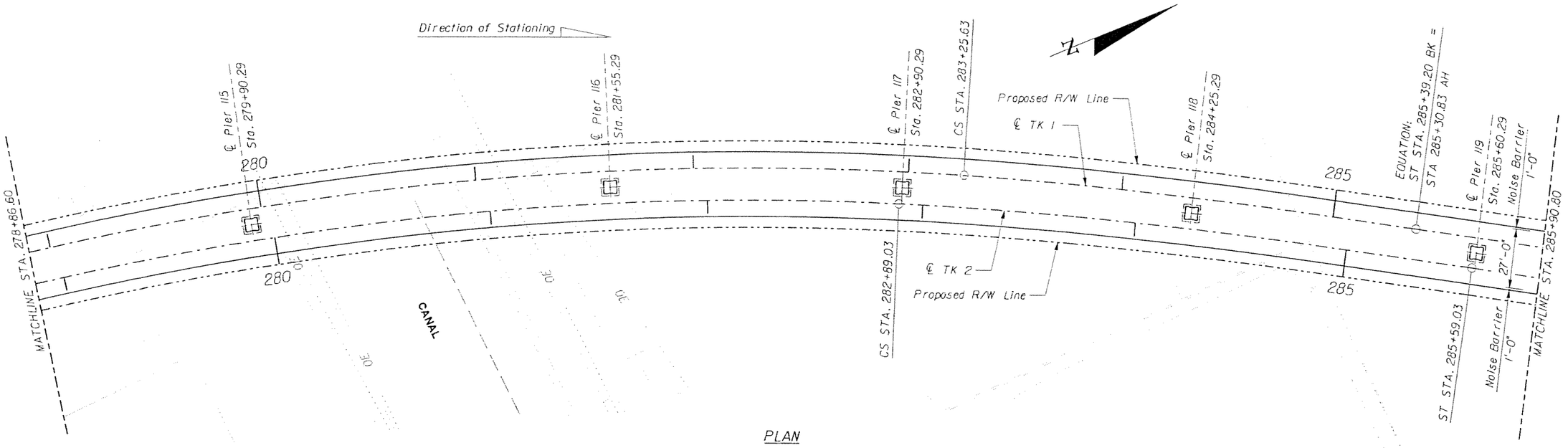

PLAN

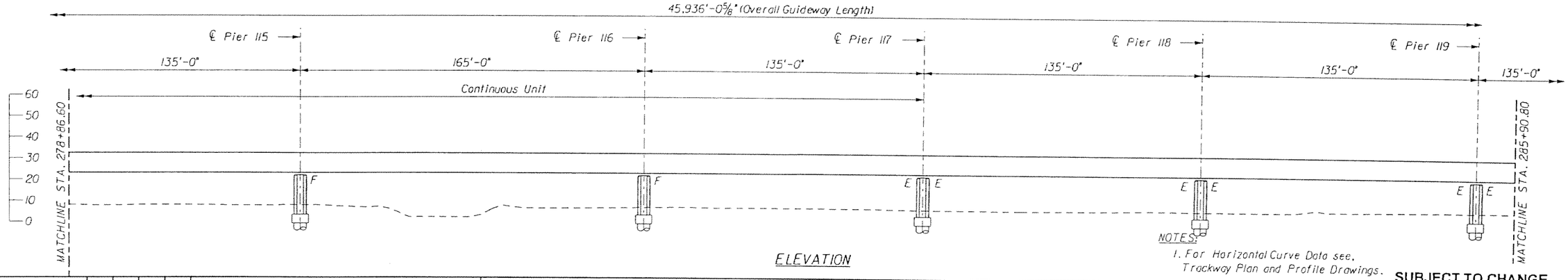

ELEVATION

NOTES:
1. For Horizontal Curve Data see, Trackway Plan and Profile Drawings.

SUBJECT TO CHANGE

GTH Designed by	1-Nov-05 Date					
KDK Drawn by	5-May-06 Date					
JER Checked by	5-May-06 Date					
TWS Approved by	5-May-06 Date	No.	Date	By / Chk	App.	Revisions

NORTH CORRIDOR METRORAIL EXTENSION - PRELIMINARY ENGINEERING (100% SUBMITTAL)

STRUCTURES - GUIDEWAY (CONCRETE)

MIAMI-DADE COUNTY

MIAMI-DADE TRANSIT

PARSONS
7600 CORPORATE CENTER DRIVE, SUITE 500
MIAMI, FLORIDA 33126
PHONE: (786) 464-1000 FAX: (786) 845-7119
CERTIFICATE OF AUTHORIZATION NO. 1638

Approved | Date | Approved | Date

GENERAL PLAN AND ELEVATION 30

Scale 1" = 50' | Drawing SGC- 31 | Sheet 242

5/8/2006 5:26:26 PM g:\646331_north_corridor\cadd\dgn\new alignment\gpe-24.dgn

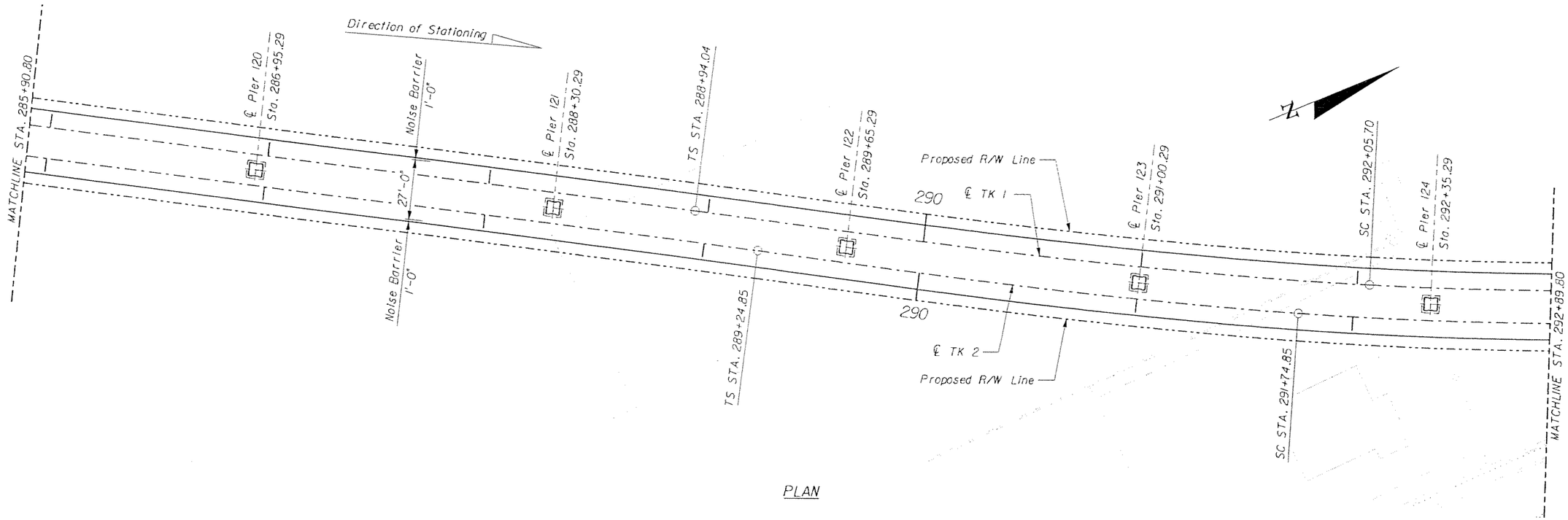

PLAN

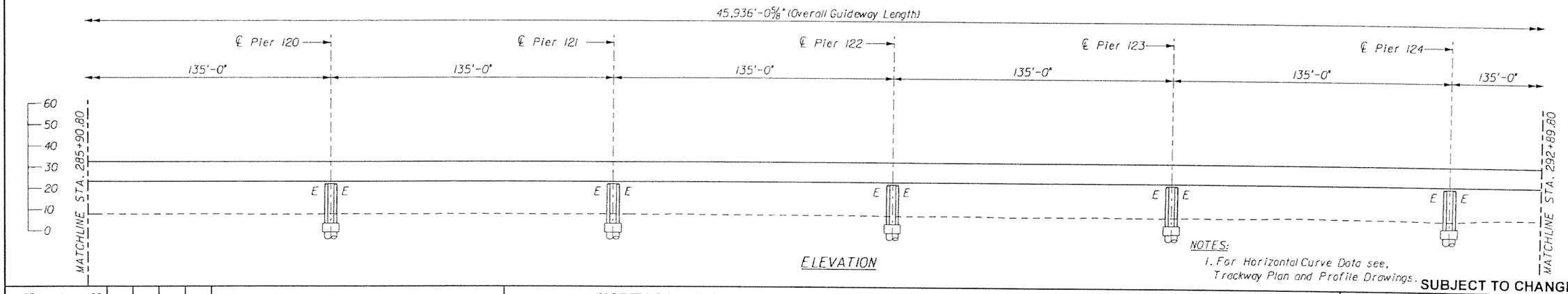

ELEVATION

NOTES:
1. For Horizontal Curve Data see, Trackway Plan and Profile Drawings.

SUBJECT TO CHANGE

GTH Designed by	1-Nov-05 Date					
KDK Drawn by	5-May-06 Date					
JER Checked by	5-May-06 Date					
TWS Approved by	5-May-06 Date	No.	Date	By / Chk	App.	Revisions

NORTH CORRIDOR METRORAIL EXTENSION - PRELIMINARY ENGINEERING (100% SUBMITTAL)

STRUCTURES - GUIDEWAY (CONCRETE)

MIAMI-DADE COUNTY

MIAMI-DADE TRANSIT

PARSONS
7600 CORPORATE CENTER DRIVE, SUITE 500
MIAMI, FLORIDA 33126
PHONE: (786) 464-1000 FAX: (786) 845-7119
CERTIFICATE OF AUTHORIZATION NO. 1838

Approved | Date

Approved | Date

GENERAL PLAN AND ELEVATION 31

Scale 1" = 50' | Drawing SGC- 32 | Sheet 243

5/8/2006 5:26:29 PM g:\648331_north_corridor\cadd\dgn\new alignment\gpe-25.dgn

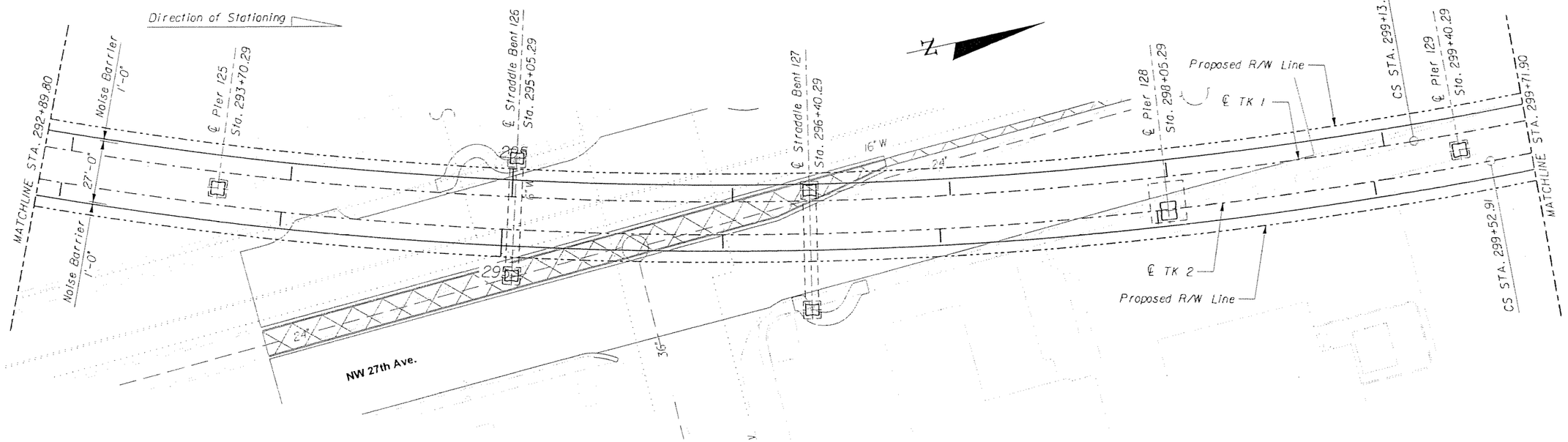

PLAN

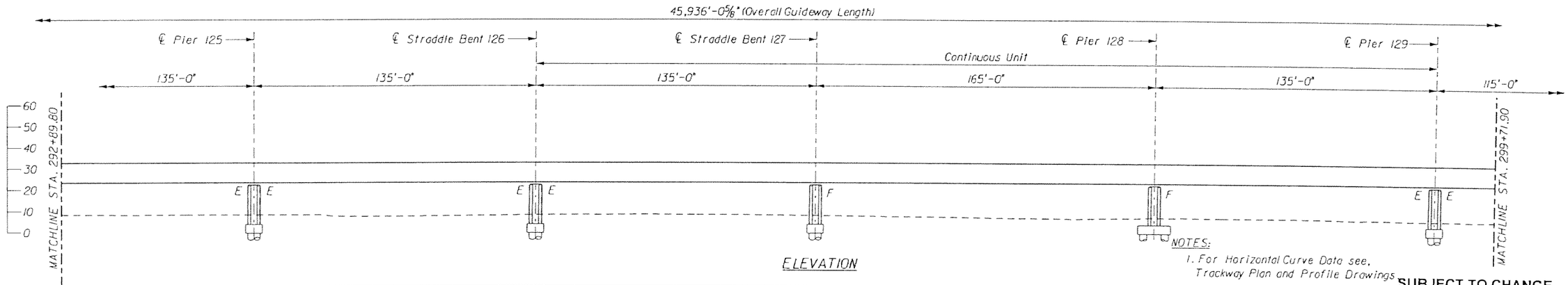

ELEVATION

NOTES:
1. For Horizontal Curve Data see, Trackway Plan and Profile Drawings

SUBJECT TO CHANGE

GTH Designed by	1-Nov-05 Date					
KDK Drawn by	5-May-06 Date					
JER Checked by	5-May-06 Date					
TWS Approved by	5-May-06 Date	No.	Date	By / Chk	App.	Revisions

NORTH CORRIDOR METRORAIL EXTENSION - PRELIMINARY ENGINEERING (100% SUBMITTAL)

MIAMI-DADE COUNTY

MIAMI-DADE TRANSIT

PARSONS
7600 CORPORATE CENTER DRIVE, SUITE 500
MIAMI, FLORIDA 33126
PHONE: (786) 464-1000 FAX: (786) 845-7119
CERTIFICATE OF AUTHORIZATION NO. 1838

Approved | Date

Approved | Date

STRUCTURES - GUIDEWAY (CONCRETE)

GENERAL PLAN AND ELEVATION 32

Scale 1" = 50' | Drawing SGC- 33 | Sheet 244

5/8/2006 5:28:35 PM g:\646331_north_corridor\cadd\dgn\new alignment\gpe-28.dgn

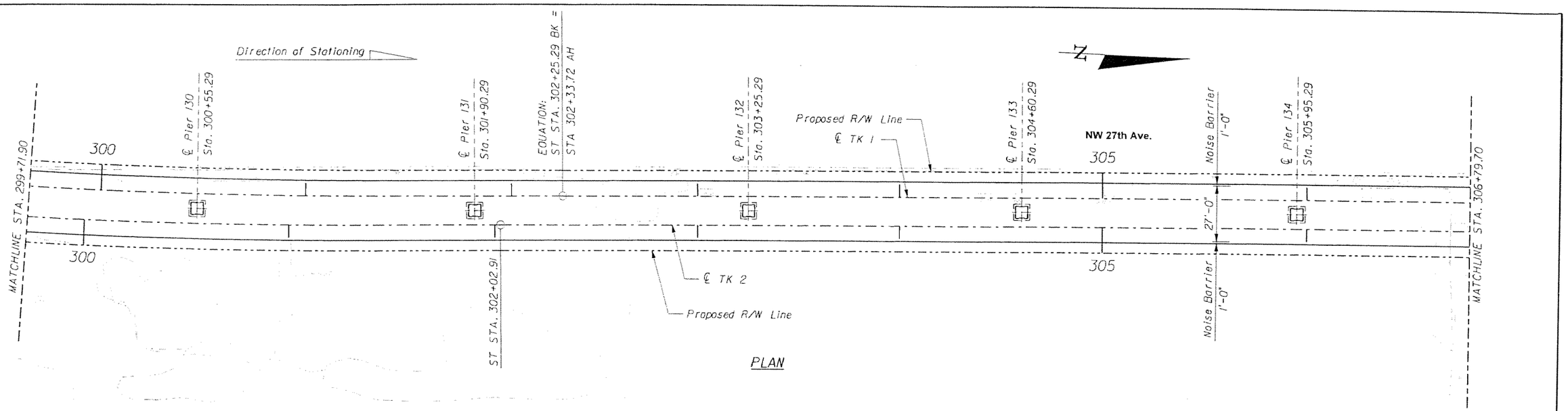

PLAN

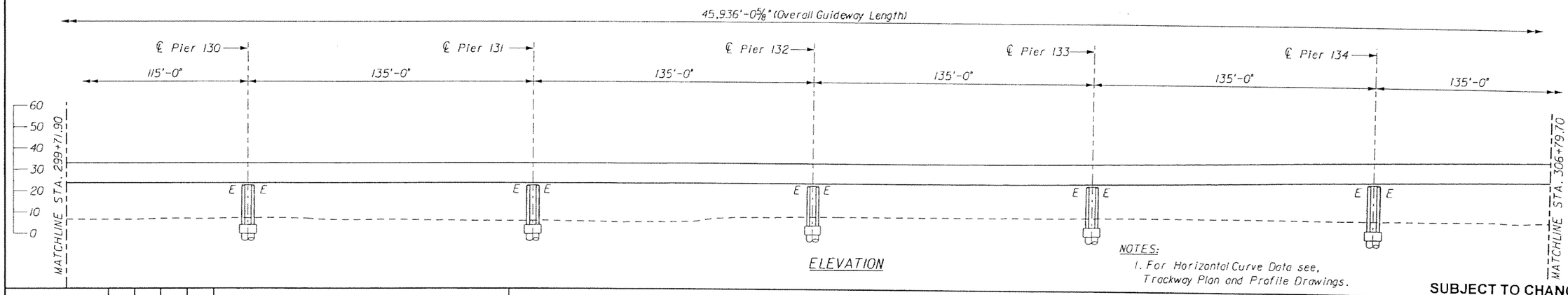

ELEVATION

NOTES:
1. For Horizontal Curve Data see, Trackway Plan and Profile Drawings.

SUBJECT TO CHANGE

GTH Designed by	1-Nov-05 Date					
KDK Drawn by	5-May-06 Date					
JER Checked by	5-May-06 Date					
TWS Approved by	5-May-06 Date	No.	Date	By / Chk	App.	Revisions

NORTH CORRIDOR METRORAIL EXTENSION - PRELIMINARY ENGINEERING (100% SUBMITTAL)

MIAMI-DADE COUNTY

MIAMI-DADE TRANSIT

PARSONS
7600 CORPORATE CENTER DRIVE, SUITE 500
MIAMI, FLORIDA 33126
PHONE: (786) 464-1000 FAX: (786) 845-7119
CERTIFICATE OF AUTHORIZATION NO. 1838

Approved	Date	Approved	Date

STRUCTURES - GUIDEWAY (CONCRETE)

GENERAL PLAN AND ELEVATION 33

Scale 1"=50' | Drawing SGC- 34 | Sheet 245

5/8/2006 5:26:37 PM g:\646331_north_corridor\caddd\dgn\new alignment\gpe-27.dgn

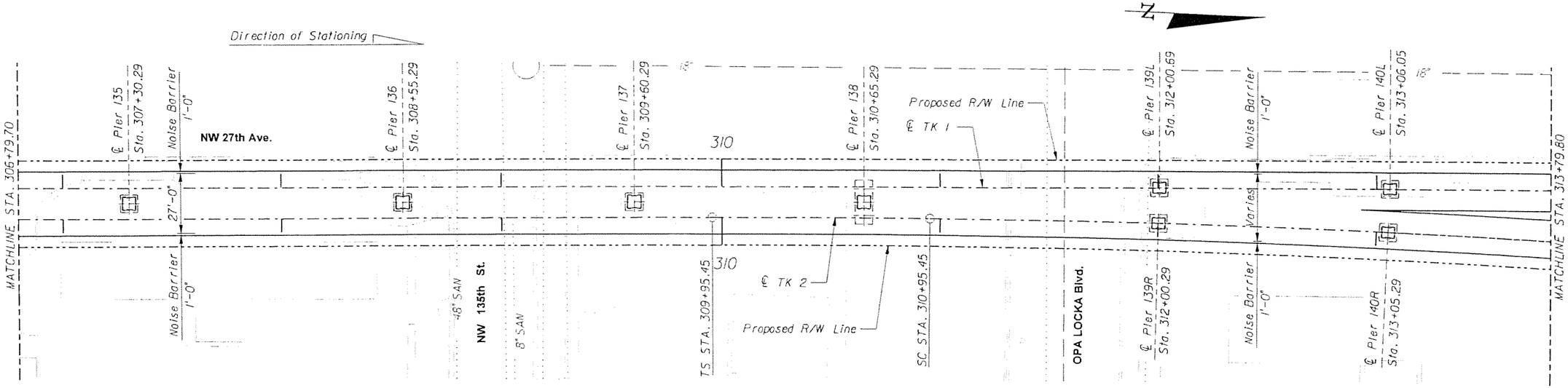

PLAN

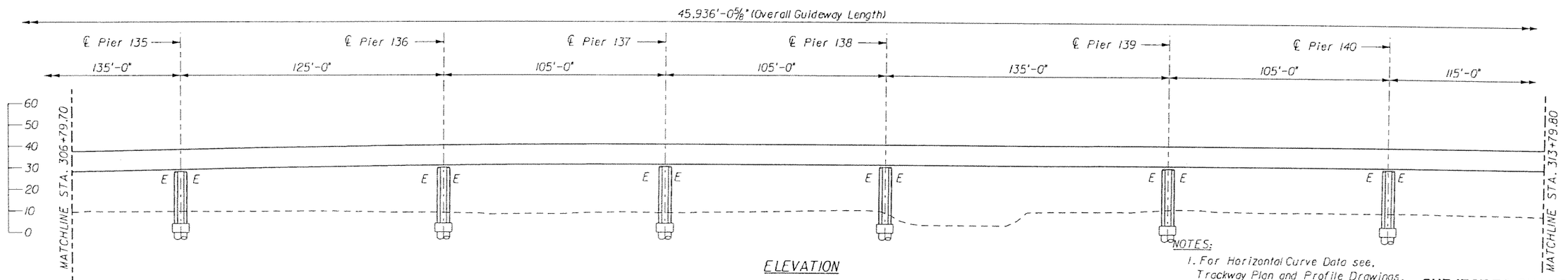

ELEVATION

NOTES:
1. For Horizontal Curve Data see, Trackway Plan and Profile Drawings.

SUBJECT TO CHANGE

GTH Designed by	1-Nov-05 Date					
KDK Drawn by	5-May-06 Date					
JER Checked by	5-May-06 Date					
TWS Approved by	5-May-06 Date	No.	Date	By / Chk	App.	Revisions

NORTH CORRIDOR METRORAIL EXTENSION - PRELIMINARY ENGINEERING (100% SUBMITTAL)

STRUCTURES - GUIDEWAY (CONCRETE)

MIAMI-DADE COUNTY

MIAMI-DADE TRANSIT

PARSONS
7600 CORPORATE CENTER DRIVE, SUITE 500
MIAMI, FLORIDA 33126
PHONE: (786) 464-1000 FAX: (786) 845-7119
CERTIFICATE OF AUTHORIZATION NO. 1838

Approved | Date

Approved | Date

GENERAL PLAN AND ELEVATION 34

Scale 1" = 50' | Drawing SGC- 35 | Sheet 246

5/8/2006 5:26:44 PM g:\546331_north_corridor\cadd\dgn\new alignment\gpe-28.dgn

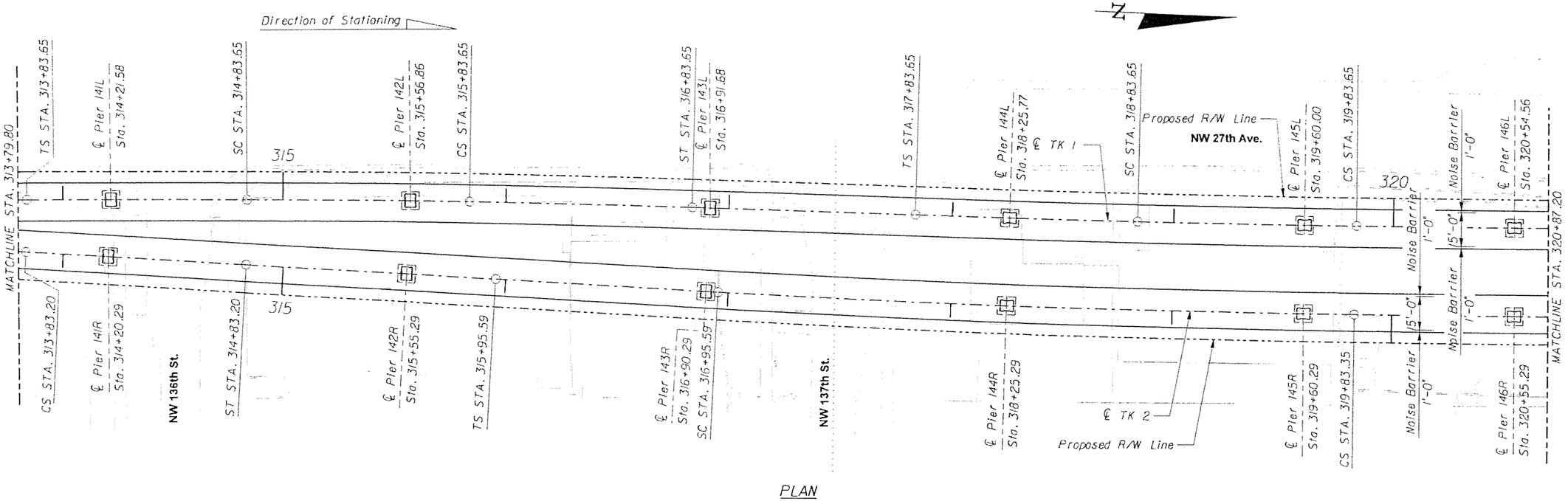

PLAN

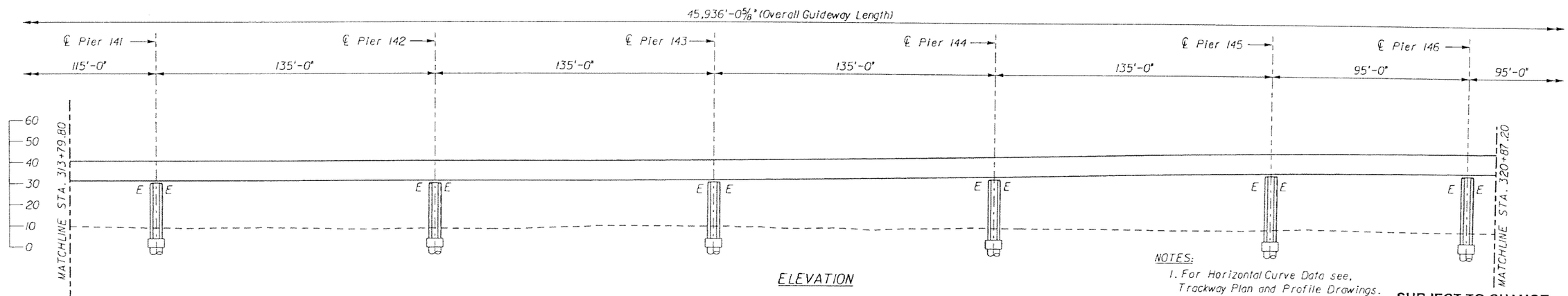

ELEVATION

NOTES:
1. For Horizontal Curve Data see, Trackway Plan and Profile Drawings.

SUBJECT TO CHANGE

GTH Designed by	1-Nov-05 Date					
KDK Drawn by	5-May-06 Date					
JER Checked by	5-May-06 Date					
TWS Approved by	5-May-06 Date	No.	Date	By / Chk	App.	Revisions

NORTH CORRIDOR METRORAIL EXTENSION - PRELIMINARY ENGINEERING (100% SUBMITTAL)

STRUCTURES - GUIDEWAY (CONCRETE)

MIAMI-DADE COUNTY

MIAMI-DADE TRANSIT

PARSONS
7600 CORPORATE CENTER DRIVE, SUITE 500
MIAMI, FLORIDA 33126
PHONE: (786) 464-1000 FAX: (786) 845-7119
CERTIFICATE OF AUTHORIZATION NO. 1838

Approved | Date

Approved | Date

GENERAL PLAN AND ELEVATION 35

Scale 1" = 50' | Drawing SGC- 35 | Sheet 247

5/8/2006 5:28:48 PM g:\646331_north_corridor\cadd\dgn\new alignment\gpe-29.dgn

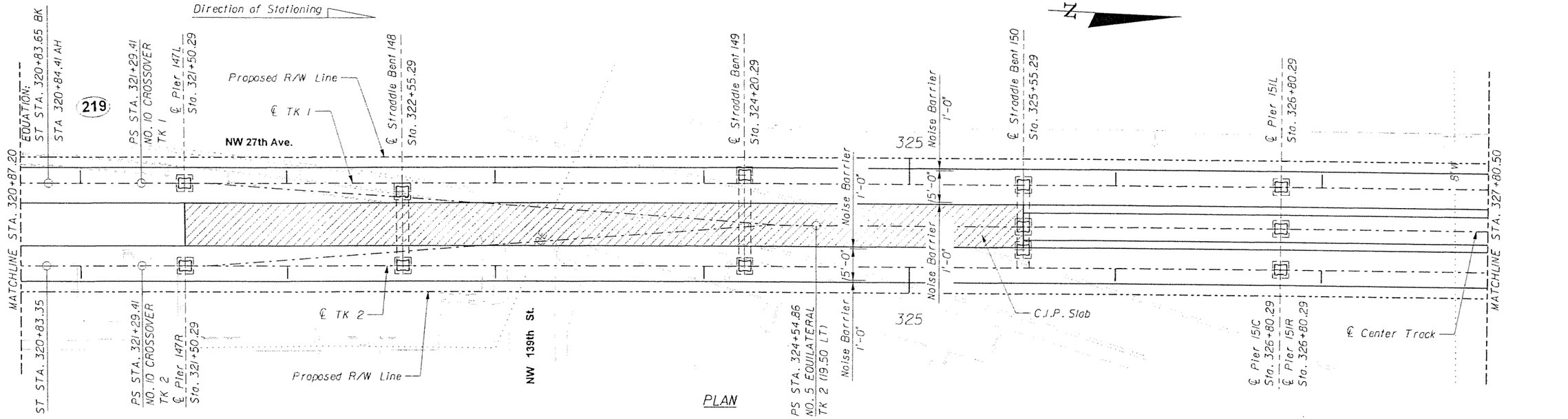

PLAN

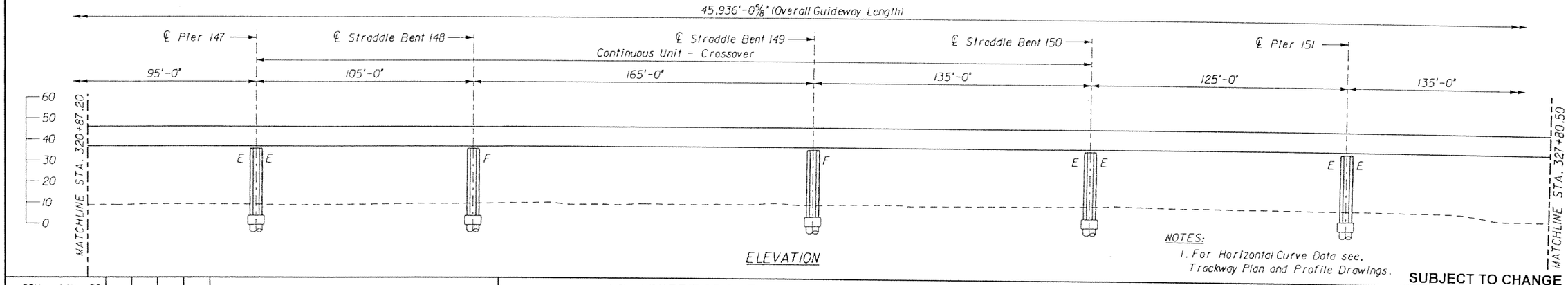

ELEVATION

NOTES:
1. For Horizontal Curve Data see, Trackway Plan and Profile Drawings.

SUBJECT TO CHANGE

GTH Designed by	1-Nov-05 Date					
KDK Drawn by	5-May-06 Date					
JER Checked by	5-May-06 Date					
TWS Approved by	5-May-06 Date	No.	Date	By / Chk	App.	Revisions

NORTH CORRIDOR METRORAIL EXTENSION - PRELIMINARY ENGINEERING (100% SUBMITTAL)

STRUCTURES - GUIDEWAY (CONCRETE)

MIAMI-DADE COUNTY

MIAMI-DADE TRANSIT

PARSONS
7600 CORPORATE CENTER DRIVE, SUITE 500
MIAMI, FLORIDA 33126
PHONE: (786) 464-1000 FAX: (786) 845-7119
CERTIFICATE OF AUTHORIZATION NO. 1838

GENERAL PLAN AND ELEVATION 36

Approved	Date	Approved	Date	Scale	Drawing	Sheet
				1" = 50'	SGC- 37	248

5/8/2006 5:26:54 PM g:\646331_north_corridor\cadd\dgn\new alignment\gpe-30.dgn

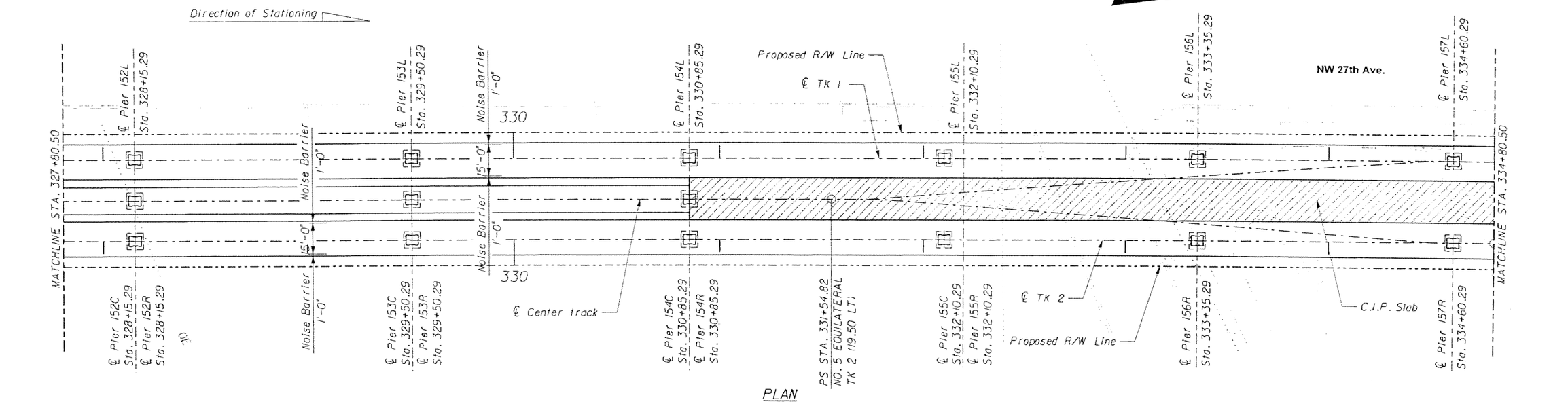

NOTES:
1. For Horizontal Curve Data see, Trackway Plan and Profile Drawings.

SUBJECT TO CHANGE

GTH Designed by	1-Nov-05 Date					
KDK Drawn by	5-May-06 Date					
JER Checked by	5-May-06 Date					
TWS Approved by	5-May-06 Date	No.	Date	By / Chk	App.	Revisions

NORTH CORRIDOR METRORAIL EXTENSION - PRELIMINARY ENGINEERING (100% SUBMITTAL)

MIAMI-DADE COUNTY

MIAMI-DADE TRANSIT

PARSONS
7600 CORPORATE CENTER DRIVE, SUITE 500
MIAMI, FLORIDA 33126
PHONE: (786) 454-1000 FAX: (786) 845-7119
CERTIFICATE OF AUTHORIZATION NO. 1836

Approved | Date | Approved | Date

STRUCTURES - GUIDEWAY (CONCRETE)

GENERAL PLAN AND ELEVATION 37

Scale 1" = 50' | Drawing SGC- 38 | Sheet 249

5/8/2006 5:28:56 PM g:\646331_north_corridor\cadd\dgn\new alignment\gpe-31.dgn

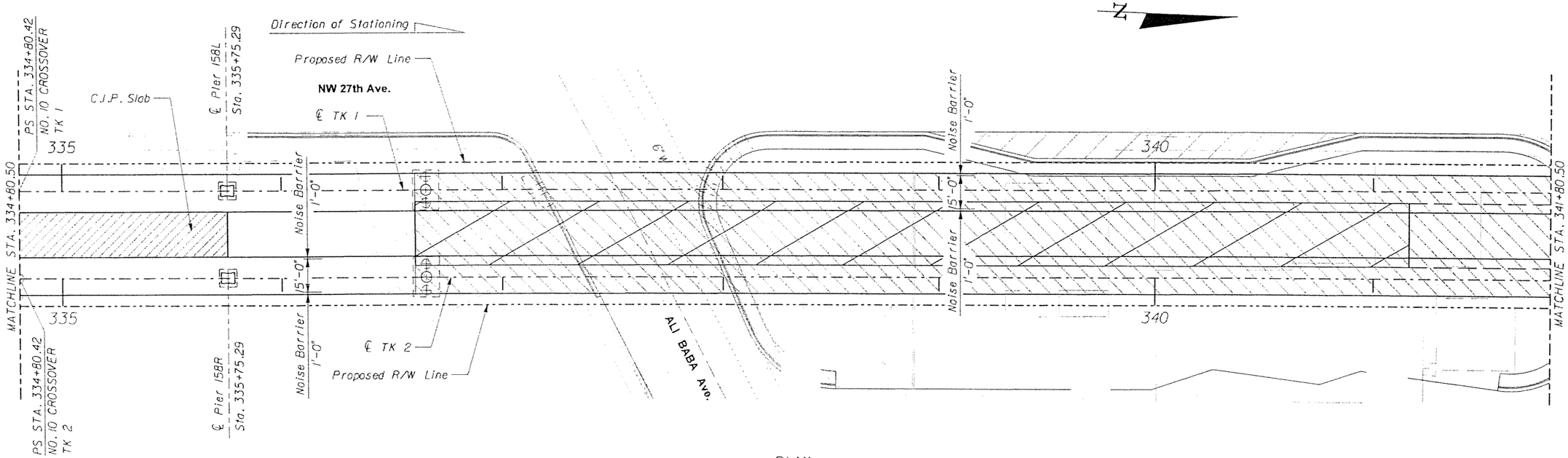

PLAN

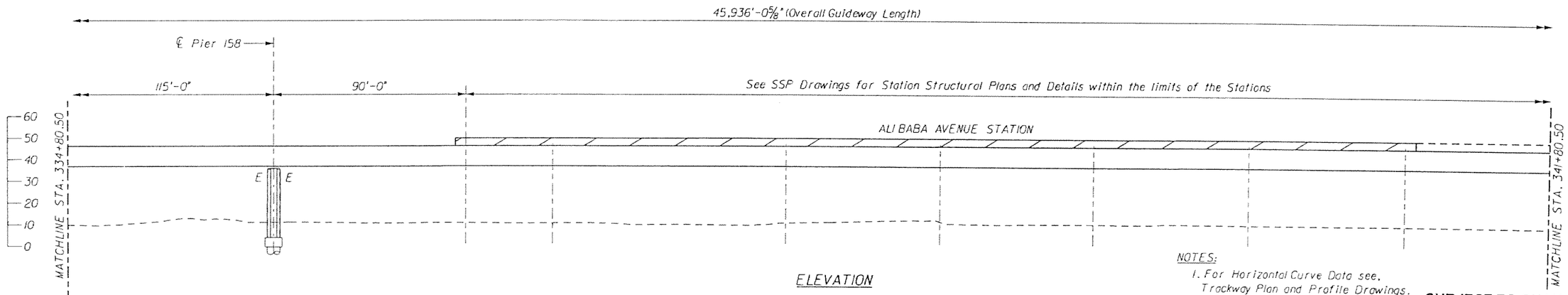

ELEVATION

NOTES:
1. For Horizontal Curve Data see, Trackway Plan and Profile Drawings.

SUBJECT TO CHANGE

GTH Designed by	1-Nov-05 Date					
KDK Drawn by	5-May-06 Date					
JER Checked by	5-May-06 Date					
TWS Approved by	5-May-06 Date	No.	Date	By / Chk	App.	Revisions

NORTH CORRIDOR METRORAIL EXTENSION - PRELIMINARY ENGINEERING (100% SUBMITTAL)

MIAMI-DADE COUNTY

MIAMI-DADE TRANSIT

PARSONS
7600 CORPORATE CENTER DRIVE, SUITE 500
MIAMI, FLORIDA 33126
PHONE: (786) 464-1000 FAX: (786) 845-7119
CERTIFICATE OF AUTHORIZATION NO. 1838

Approved | Date | Approved | Date

STRUCTURES - GUIDEWAY (CONCRETE)

GENERAL PLAN AND ELEVATION 38

Scale 1" = 50' | Drawing SGC- 39 | Sheet 250

5/8/2006 5:26:59 PM g:\646331_north_corridor\cadd\dgn\new alignment\gpe-32.dgn

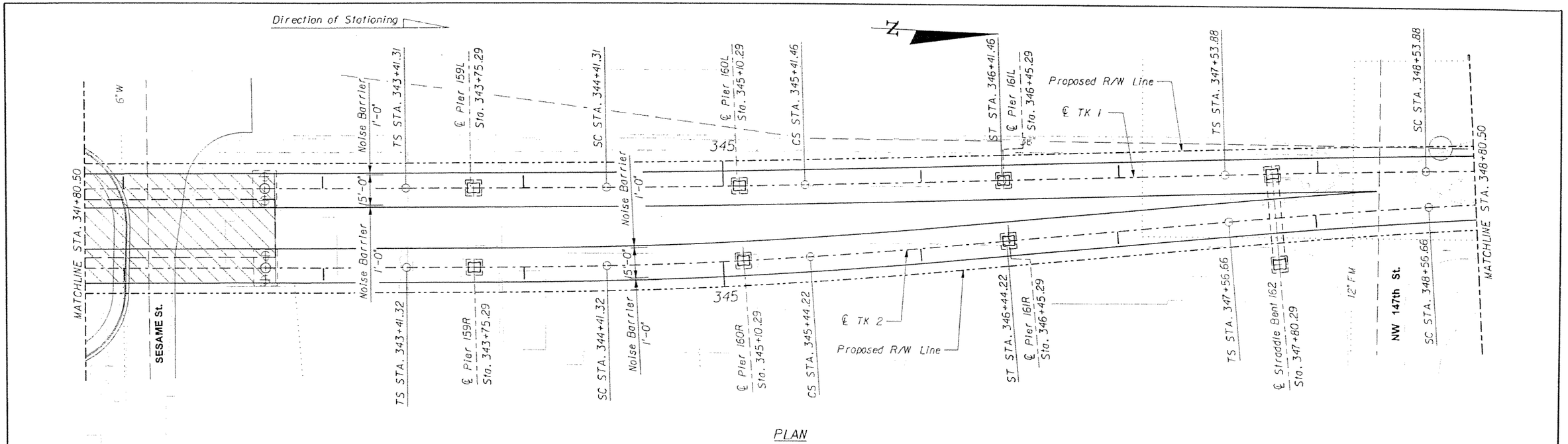

PLAN

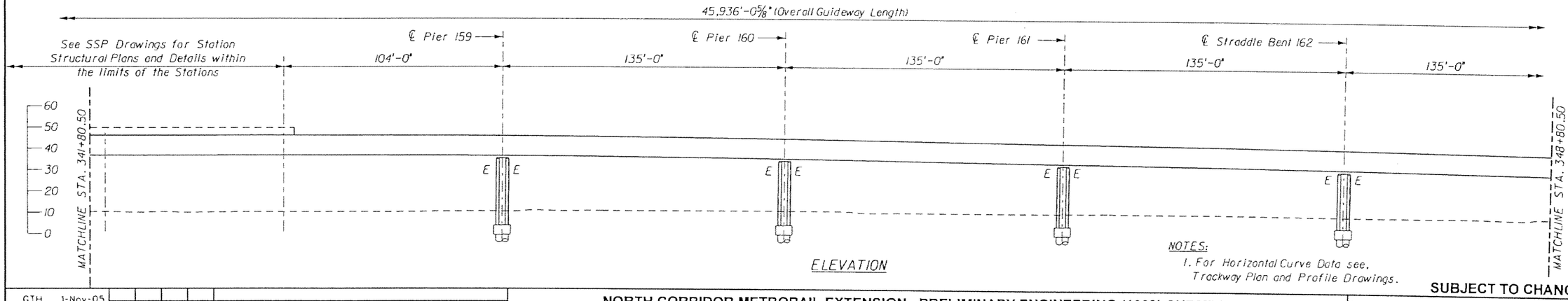

ELEVATION

NOTES:
1. For Horizontal Curve Data see, Trackway Plan and Profile Drawings.

SUBJECT TO CHANGE

GTH Designed by	1-Nov-05 Date					
KDK Drawn by	5-May-06 Date					
JER Checked by	5-May-06 Date					
TWS Approved by	5-May-06 Date	No.	Date	By / Chk	App.	Revisions

NORTH CORRIDOR METRORAIL EXTENSION - PRELIMINARY ENGINEERING (100% SUBMITTAL)

STRUCTURES - GUIDEWAY (CONCRETE)

MIAMI-DADE COUNTY

MIAMI-DADE TRANSIT

PARSONS
7600 CORPORATE CENTER DRIVE, SUITE 500
MIAMI, FLORIDA 33126
PHONE: (786) 464-1000 FAX: (786) 845-7119
CERTIFICATE OF AUTHORIZATION NO. 1638

Approved | Date | Approved | Date

GENERAL PLAN AND ELEVATION 39

Scale 1" = 50' | Drawing SGC- 40 | Sheet 251

5/8/2006 5:27:05 PM g:\646331_north_corridor\cadd\dgn\new alignment\gpe-33.dgn

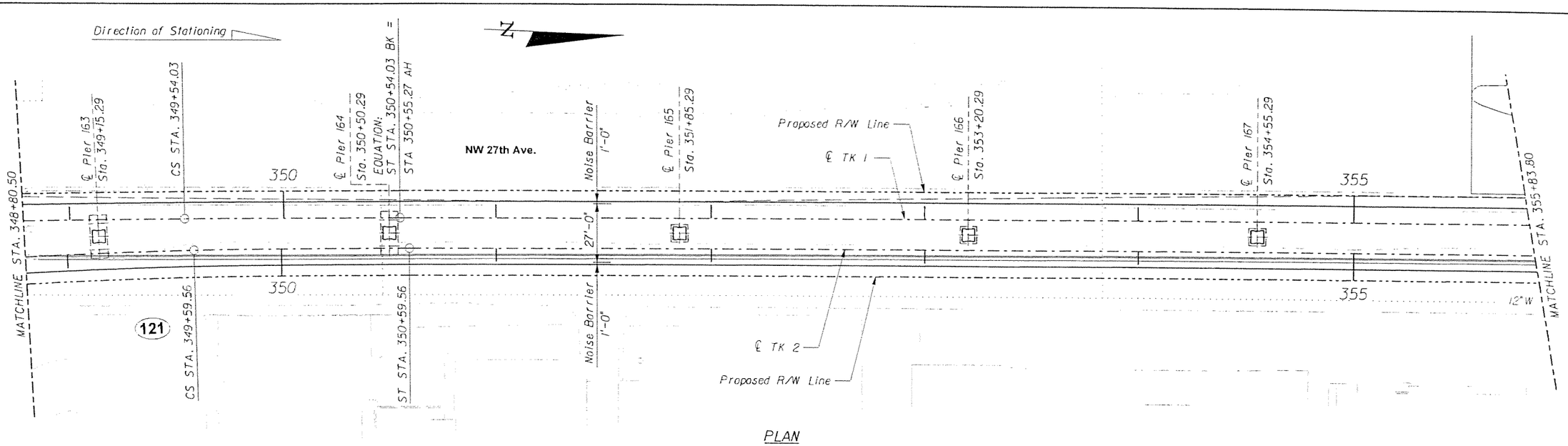

PLAN

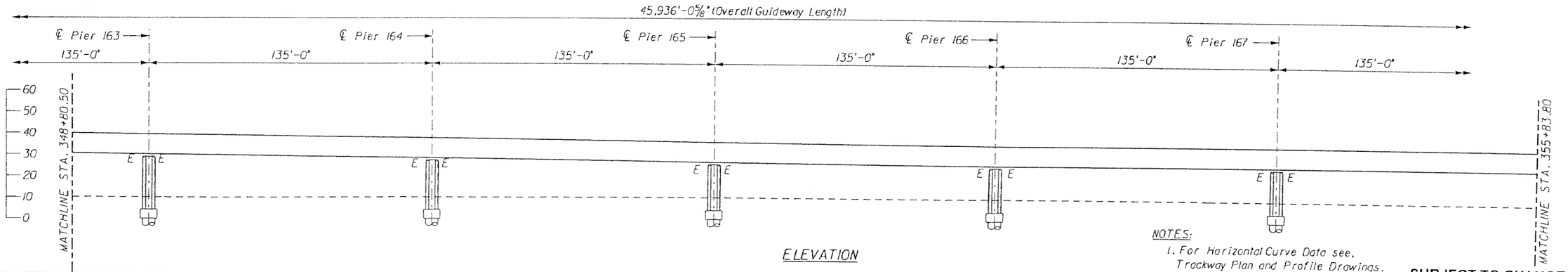

ELEVATION

NOTES:
1. For Horizontal Curve Data see, Trackway Plan and Profile Drawings.

SUBJECT TO CHANGE

GTH Designed by	1-Nov-05 Date					
KDK Drawn by	5-May-06 Date					
JER Checked by	5-May-06 Date					
TWS Approved by	5-May-06 Date	No.	Date	By / Chk	App.	Revisions

NORTH CORRIDOR METRORAIL EXTENSION - PRELIMINARY ENGINEERING (100% SUBMITTAL)

MIAMI-DADE COUNTY

MIAMI-DADE TRANSIT

PARSONS
7600 CORPORATE CENTER DRIVE, SUITE 500
MIAMI, FLORIDA 33126
PHONE: (786) 464-1000 FAX: (786) 845-7119
CERTIFICATE OF AUTHORIZATION NO. 1838

Approved | Date

Approved | Date

STRUCTURES - GUIDEWAY (CONCRETE)

GENERAL PLAN AND ELEVATION 40

Scale 1" = 50' | Drawing SGC- 41 | Sheet 252

5/8/2006 5:27:07 PM g:\646331_north_corridor\cadd\dgn\new alignment\gpe-34.dgn

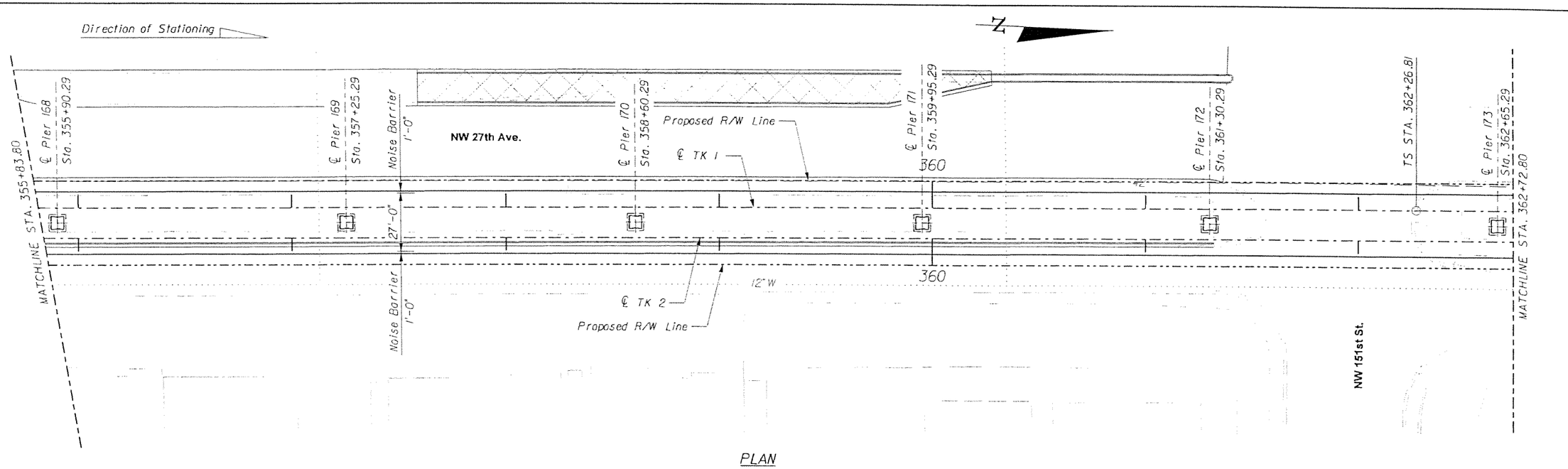

PLAN

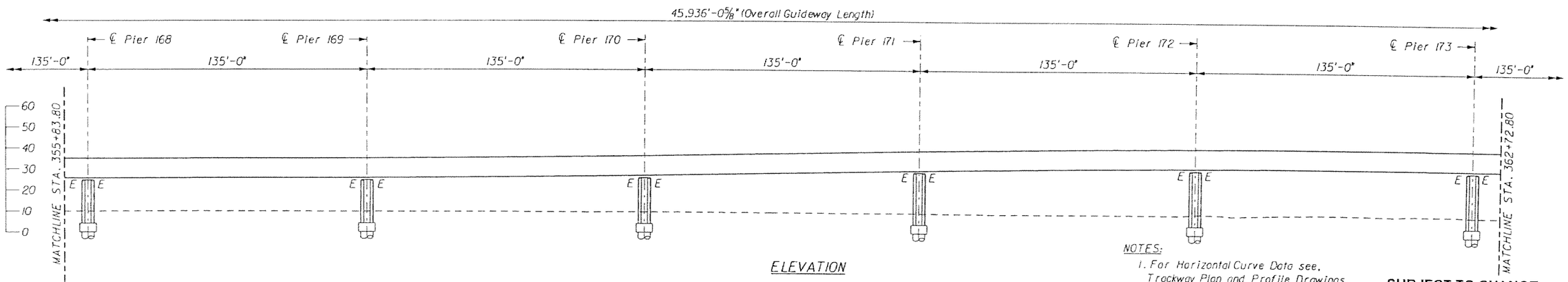

ELEVATION

NOTES:
1. For Horizontal Curve Data see, Trackway Plan and Profile Drawings.

SUBJECT TO CHANGE

GTH Designed by	1-Nov-05 Date					
KDK Drawn by	5-May-06 Date					
JER Checked by	5-May-06 Date					
TWS Approved by	5-May-06 Date	No.	Date	By / Chk.	App.	Revisions

NORTH CORRIDOR METRORAIL EXTENSION - PRELIMINARY ENGINEERING (100% SUBMITTAL)

MIAMI-DADE COUNTY

MIAMI-DADE TRANSIT

PARSONS
7600 CORPORATE CENTER DRIVE, SUITE 500
MIAMI, FLORIDA 33126
PHONE: (786) 464-1000 FAX: (786) 845-7119
CERTIFICATE OF AUTHORIZATION NO. 1838

Approved | Date

Approved | Date

STRUCTURES - GUIDEWAY (CONCRETE)

GENERAL PLAN AND ELEVATION 41

Scale 1" = 50' | Drawing SGC- 42 | Sheet 253

5/8/2006 5:27:13 PM g:\646331_north_corridor\cadd\dgn\new alignment\gpe-35.dgn

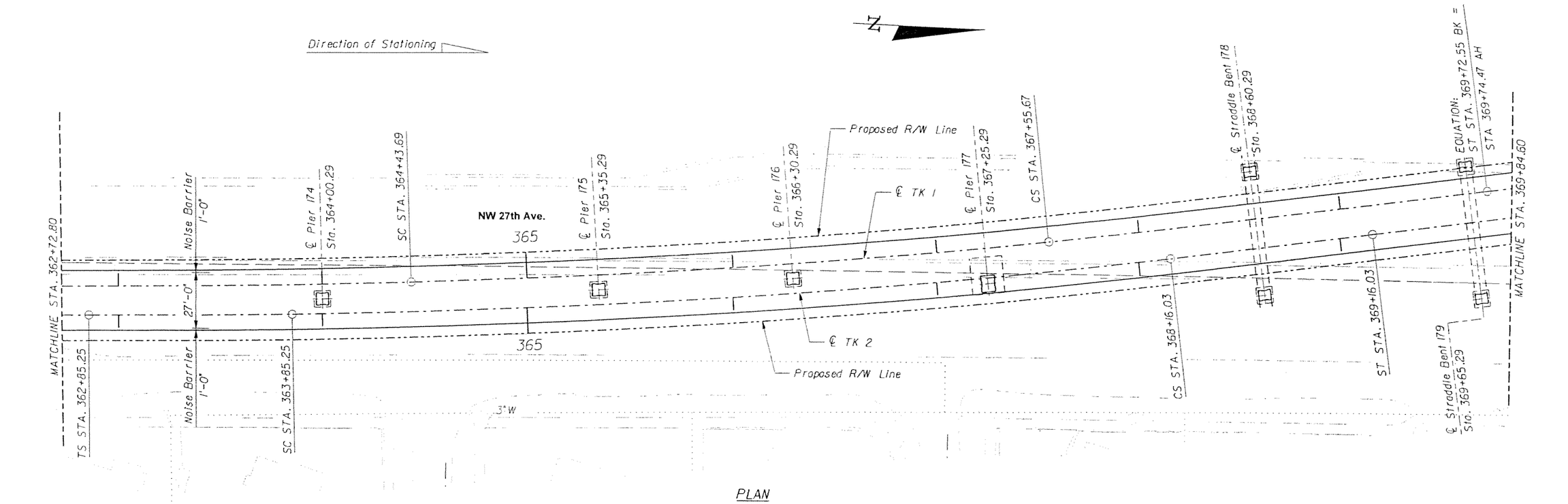

PLAN

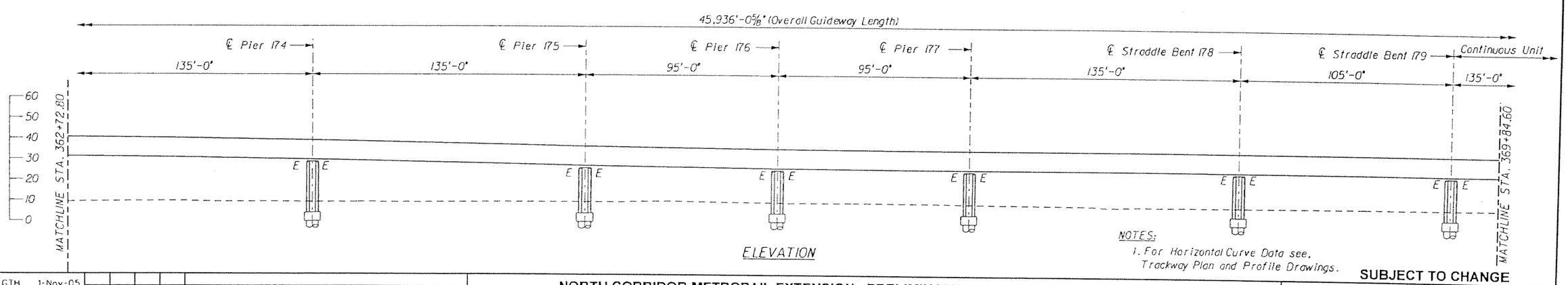

ELEVATION

NOTES:
1. For Horizontal Curve Data see, Trackway Plan and Profile Drawings.

SUBJECT TO CHANGE

GTH	1-Nov-05					
Designed by	Date					
KDK	5-May-06					
Drawn by	Date					
JER	5-May-06					
Checked by	Date					
TWS	5-May-06					
Approved by	Date	No.	Date	By / Chk	App.	Revisions

NORTH CORRIDOR METRORAIL EXTENSION - PRELIMINARY ENGINEERING (100% SUBMITTAL)

MIAMI-DADE COUNTY

MIAMI-DADE TRANSIT

PARSONS
7600 CORPORATE CENTER DRIVE, SUITE 500
MIAMI, FLORIDA 33126
PHONE: (786) 464-1000 FAX: (786) 845-7119
CERTIFICATE OF AUTHORIZATION NO. 1838

Approved | Date

Approved | Date

STRUCTURES - GUIDEWAY (CONCRETE)

GENERAL PLAN AND ELEVATION 42

Scale 1" = 50' | Drawing SGC- 43 | Sheet 254

5/8/2006 5:27:18 PM g:\546331_north_corridor\cadd\dgn\new alignment\gpe-36.dgn

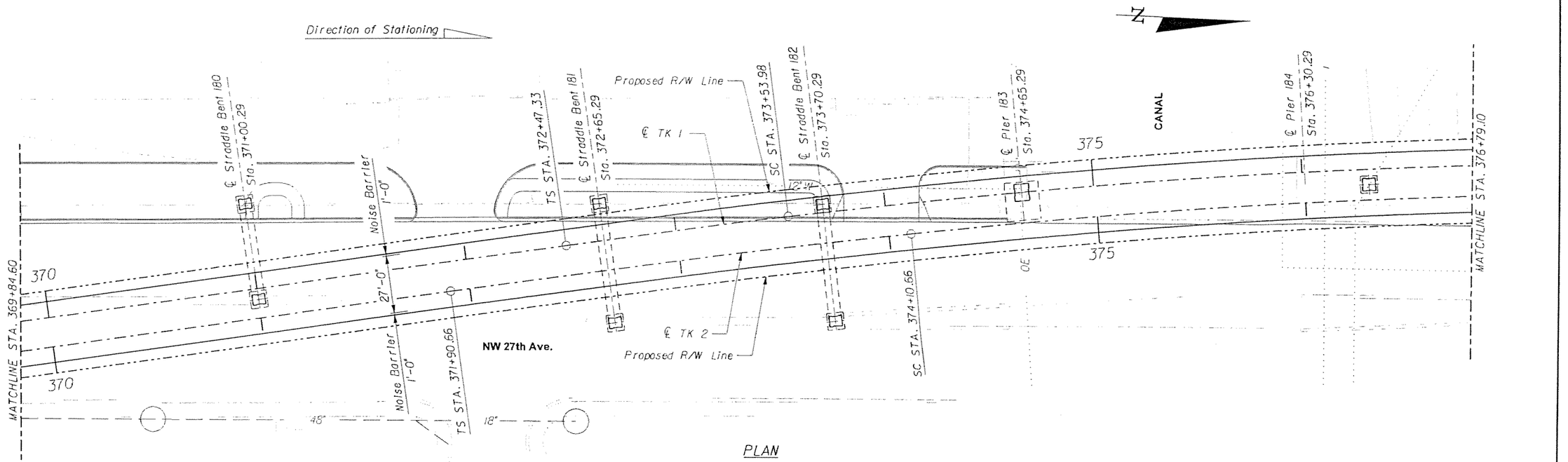

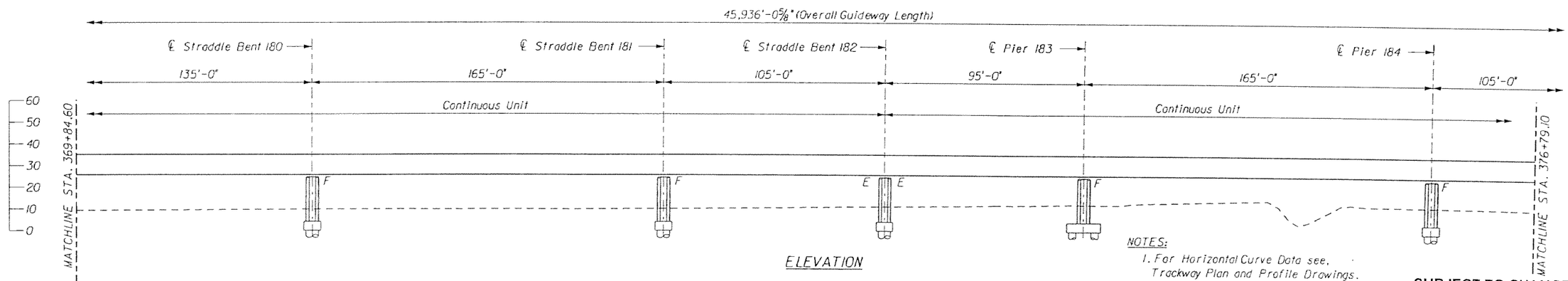

NOTES:
1. For Horizontal Curve Data see, Trackway Plan and Profile Drawings.

SUBJECT TO CHANGE

GTH	1-Nov-05				
Designed by	Date				
KDK	5-May-06				
Drawn by	Date				
JER	5-May-06				
Checked by	Date				
TWS	5-May-06				
Approved by	Date	No.	Date	By / Chk	App.	Revisions

NORTH CORRIDOR METRORAIL EXTENSION - PRELIMINARY ENGINEERING (100% SUBMITTAL)

STRUCTURES - GUIDEWAY (CONCRETE)

MIAMI-DADE COUNTY

MIAMI-DADE TRANSIT

PARSONS
7600 CORPORATE CENTER DRIVE, SUITE 500
MIAMI, FLORIDA 33126
PHONE: (786) 464-1000 FAX: (786) 845-7119
CERTIFICATE OF AUTHORIZATION NO. 1838

Approved | Date

Approved | Date

GENERAL PLAN AND ELEVATION 43

Scale 1"=50' | Drawing SGC- 44 | Sheet 255

5/8/2006 5:27:18 PM g:\646331_north_corridor\cadd\dgn\new alignment\gpe-37.dgn

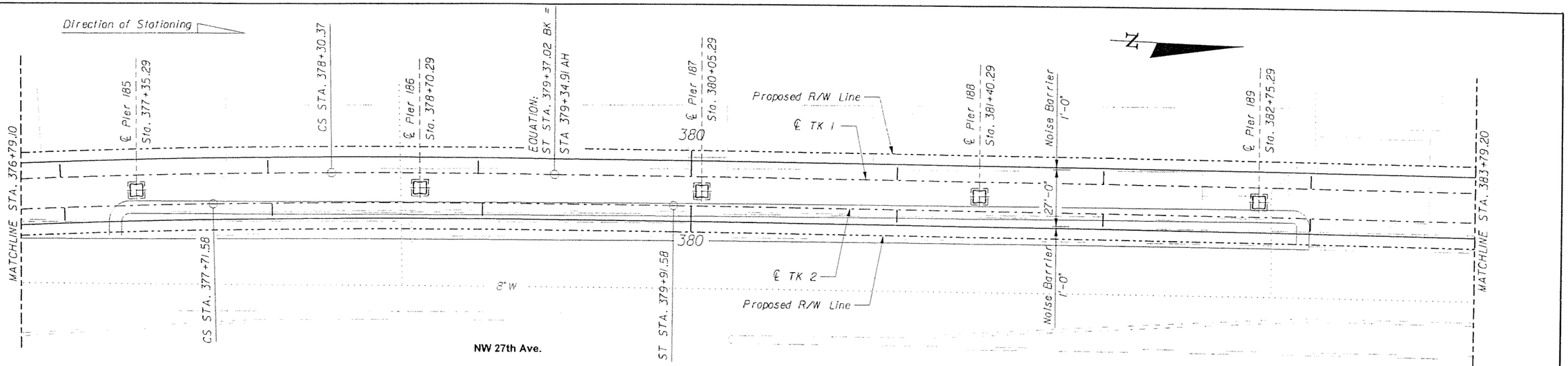

PLAN

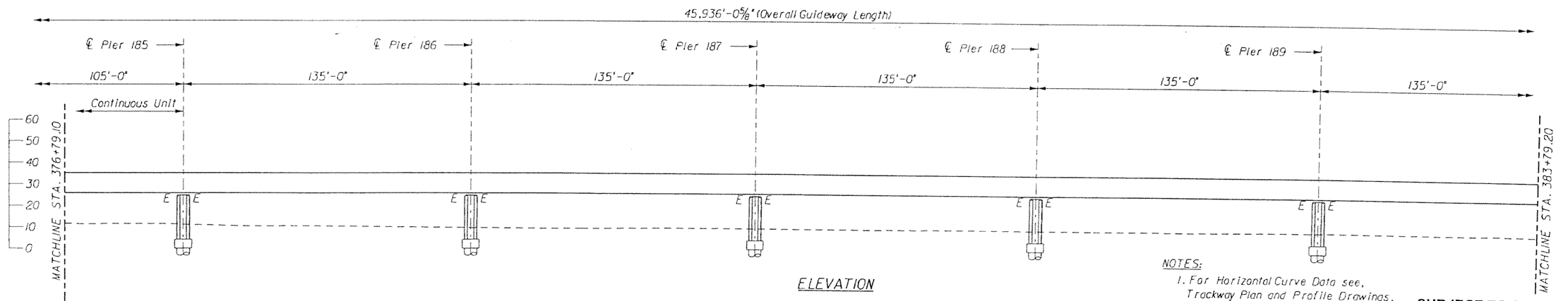

ELEVATION

NOTES:
1. For Horizontal Curve Data see, Trackway Plan and Profile Drawings.

SUBJECT TO CHANGE

GTH Designed by	1-Nov-05 Date				
KDK Drawn by	5-May-06 Date				
JER Checked by	5-May-06 Date				
TWS Approved by	5-May-06 Date	No.	Date	By / Chk	App. Revisions

NORTH CORRIDOR METRORAIL EXTENSION - PRELIMINARY ENGINEERING (100% SUBMITTAL)

MIAMI-DADE COUNTY

MIAMI-DADE TRANSIT

PARSONS
7600 CORPORATE CENTER DRIVE, SUITE 500
MIAMI, FLORIDA 33126
PHONE: (786) 464-1000 FAX: (786) 845-7119
CERTIFICATE OF AUTHORIZATION NO. 1838

Approved | Date | Approved | Date

STRUCTURES - GUIDEWAY (CONCRETE)

GENERAL PLAN AND ELEVATION 44

Scale 1" = 50' | Drawing SGC- 45 | Sheet 256

5/8/2006 5:27:25 PM g:\646331_north_corridor\cadd\dgn\new alignment\gpe-38.dgn

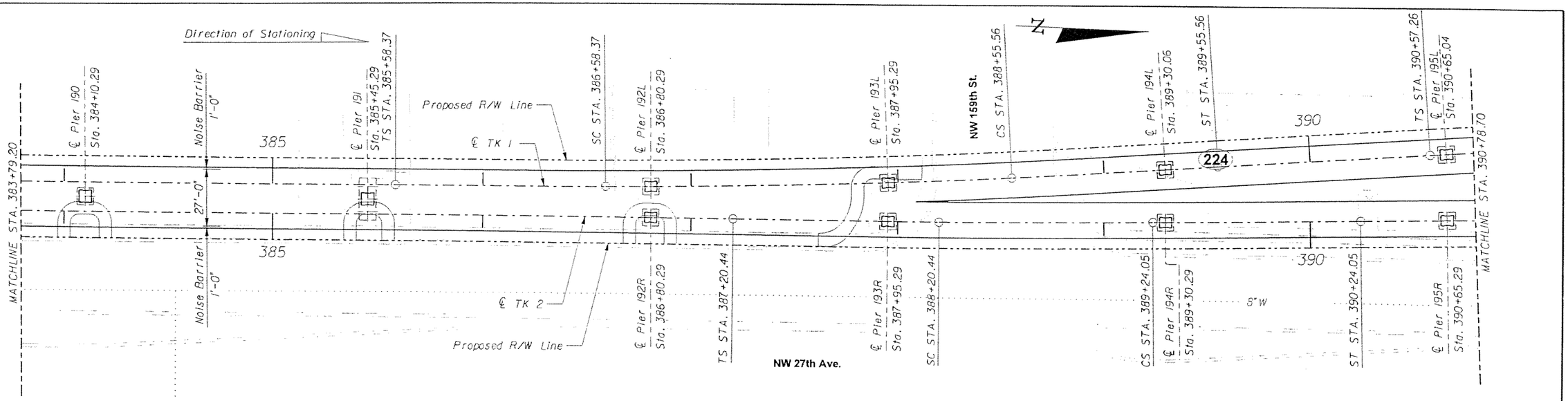

PLAN

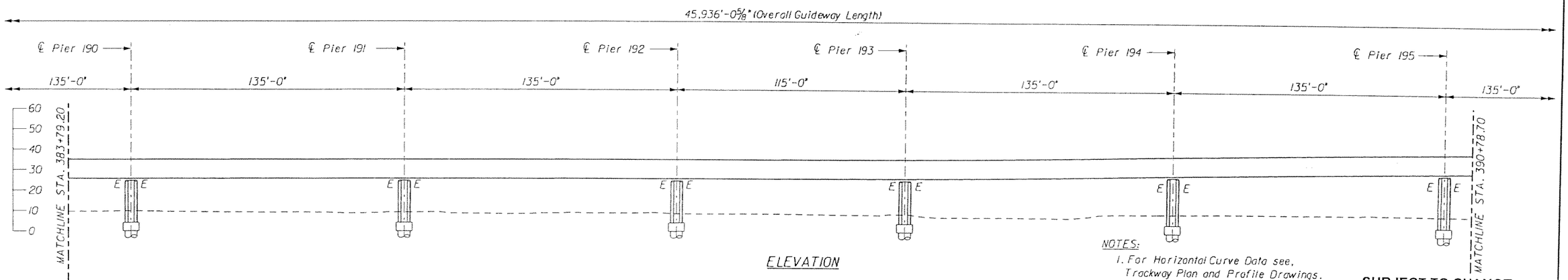

ELEVATION

NOTES:
1. For Horizontal Curve Data see, Trackway Plan and Profile Drawings.

SUBJECT TO CHANGE

GTH Designed by	1-Nov-05 Date				
KDK Drawn by	5-May-06 Date				
JER Checked by	5-May-06 Date				
TWS Approved by	5-May-06 Date	No.	Date	By / Chk	App.	Revisions

NORTH CORRIDOR METRORAIL EXTENSION - PRELIMINARY ENGINEERING (100% SUBMITTAL)

MIAMI-DADE COUNTY

MIAMI-DADE TRANSIT

PARSONS
7600 CORPORATE CENTER DRIVE, SUITE 500
MIAMI, FLORIDA 33126
PHONE: (786) 464-1000 FAX: (786) 845-7119
CERTIFICATE OF AUTHORIZATION NO. 1838

Approved | Date

Approved | Date

STRUCTURES - GUIDEWAY (CONCRETE)

GENERAL PLAN AND ELEVATION 45

Scale 1" = 50' | Drawing SGC- 46 | Sheet 257

5/8/2006 5:27:27 PM g:\648331_north_corridor\cadd\dgn\new alignment\gpe-39.dgn

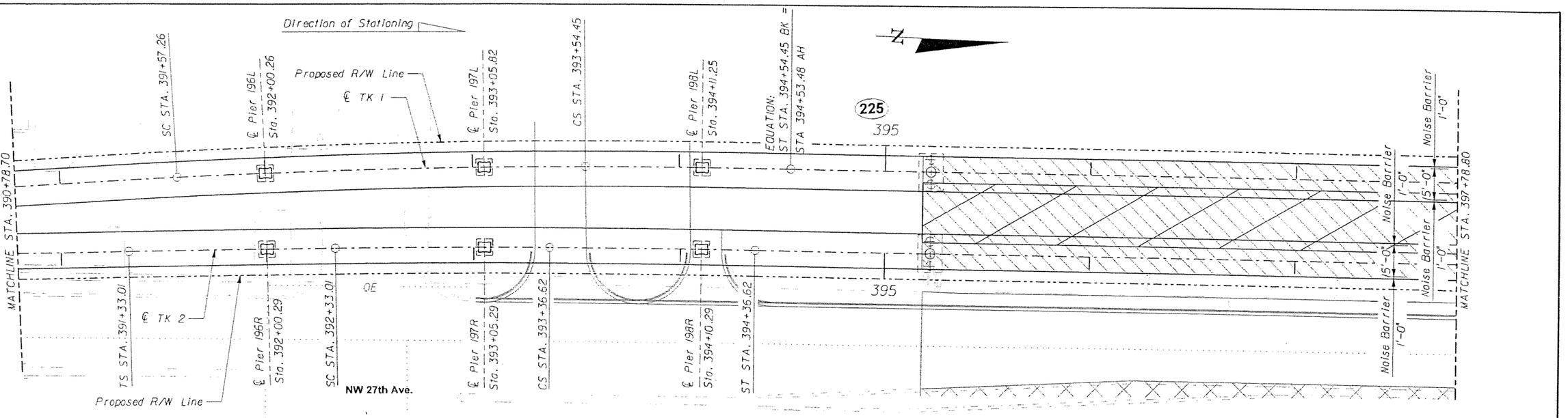

PLAN

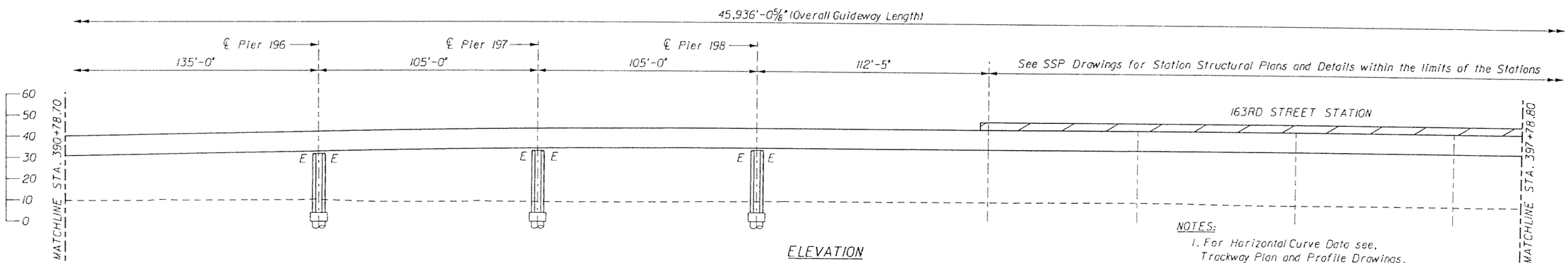

ELEVATION

NOTES:
1. For Horizontal Curve Data see, Trackway Plan and Profile Drawings.

SUBJECT TO CHANGE

GTH Designed by	1-Nov-05 Date					
KDK Drawn by	5-May-06 Date					
JER Checked by	5-May-06 Date					
TWS Approved by	5-May-06 Date	No.	Date	By / Chk	App.	Revisions

NORTH CORRIDOR METRORAIL EXTENSION - PRELIMINARY ENGINEERING (100% SUBMITTAL)

STRUCTURES - GUIDEWAY (CONCRETE)

MIAMI-DADE COUNTY

MIAMI-DADE TRANSIT

PARSONS
7600 CORPORATE CENTER DRIVE, SUITE 500
MIAMI, FLORIDA 33126
PHONE: (786) 464-1000 FAX: (786) 845-7119
CERTIFICATE OF AUTHORIZATION NO. 1838

Approved / Date

Approved / Date

GENERAL PLAN AND ELEVATION 46

Scale 1" = 50' | Drawing SGC- 47 | Sheet 259

5/8/2006 5:27:29 PM g:\646331_north_corridor\cadd\dgn\new alignment\gpe-40.dgn

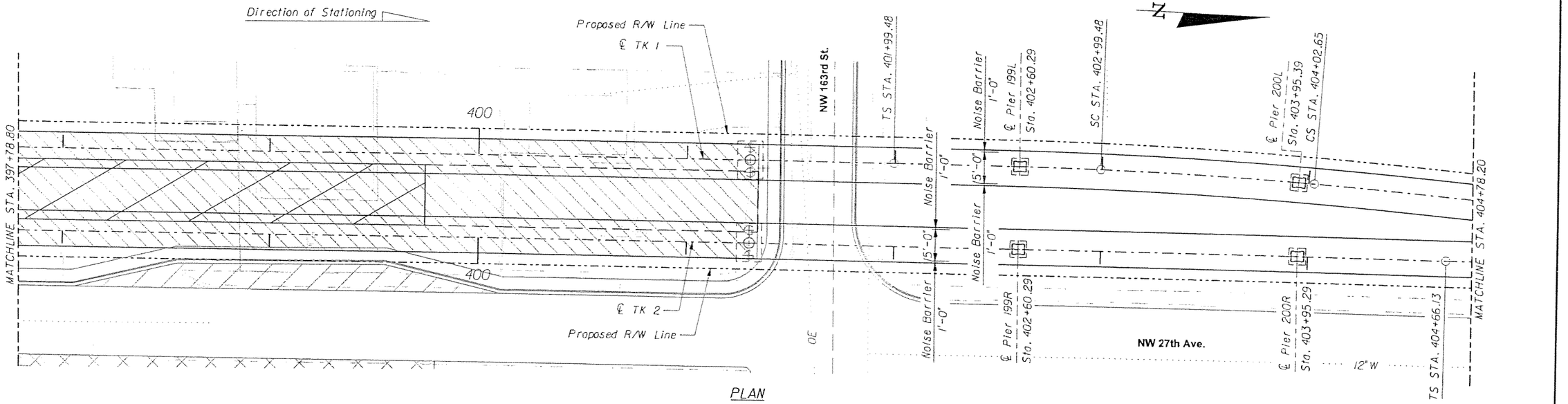

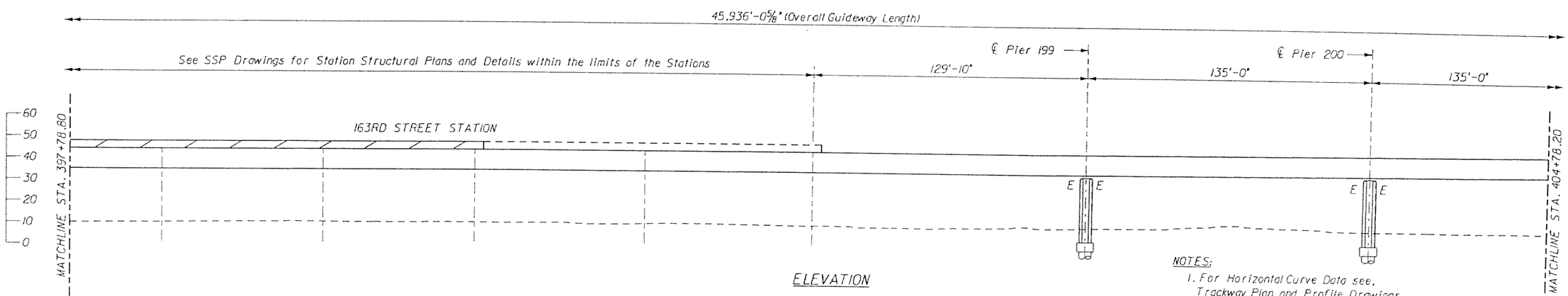

NOTES:
1. For Horizontal Curve Data see, Trackway Plan and Profile Drawings.

SUBJECT TO CHANGE

GTH Designed by	1-Nov-05 Date					
KDK Drawn by	5-May-06 Date					
JER Checked by	5-May-06 Date					
TWS Approved by	5-May-06 Date	No.	Date	By / Chk	App.	Revisions

NORTH CORRIDOR METRORAIL EXTENSION - PRELIMINARY ENGINEERING (100% SUBMITTAL)

MIAMI-DADE COUNTY

MIAMI-DADE TRANSIT

PARSONS
7600 CORPORATE CENTER DRIVE, SUITE 500
MIAMI, FLORIDA 33126
PHONE: (786) 464-1000 FAX: (786) 845-7119
CERTIFICATE OF AUTHORIZATION NO. 1838

Approved | Date | Approved | Date

STRUCTURES - GUIDEWAY (CONCRETE)

GENERAL PLAN AND ELEVATION 47

Scale 1" = 50' | Drawing SGC- 48 | Sheet 259

5/8/2006 5:27:35 PM g:\646331_north_corridor\caddd\gn\new alignment\gpe-41.dgn

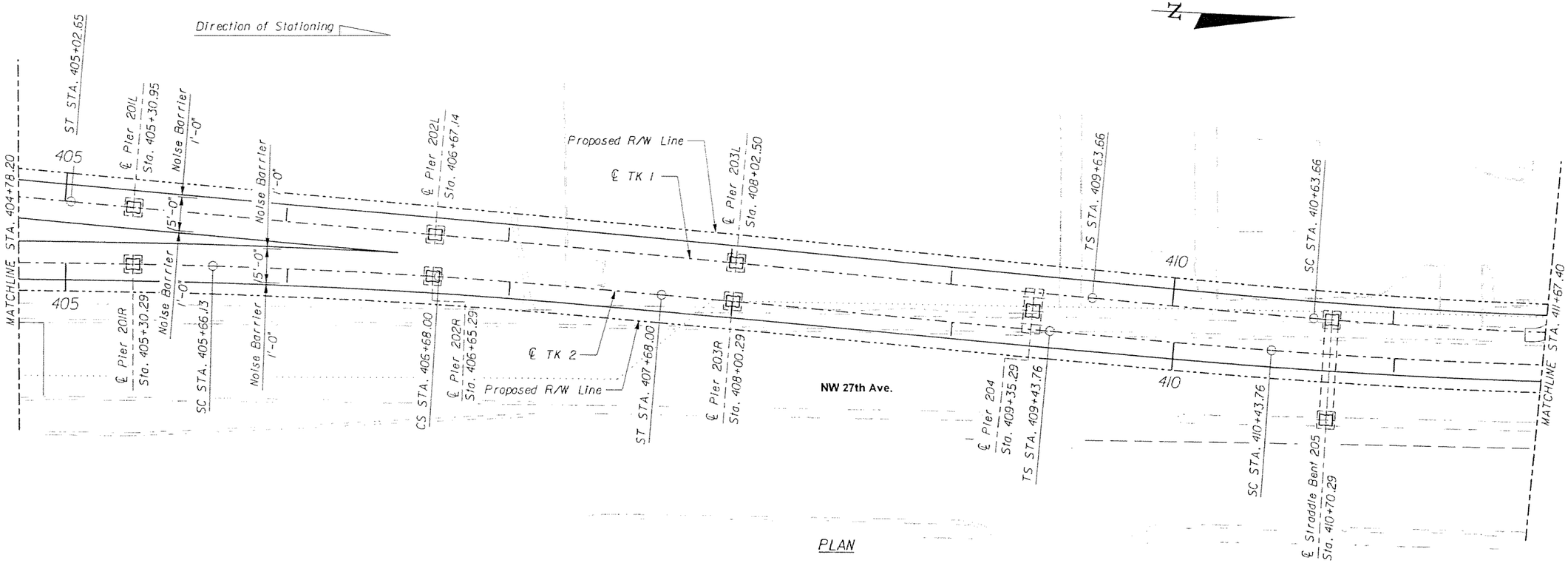

SUBJECT TO CHANGE

GTH Designed by	1-Nov-05 Date					
KDK Drawn by	5-May-06 Date					
JER Checked by	5-May-06 Date					
TWS Approved by	5-May-06 Date	No.	Date	By / Chk	App.	Revisions

NORTH CORRIDOR METRORAIL EXTENSION - PRELIMINARY ENGINEERING (100% SUBMITTAL)

MIAMI-DADE COUNTY

MIAMI-DADE TRANSIT

PARSONS
7600 CORPORATE CENTER DRIVE, SUITE 500
MIAMI, FLORIDA 33126
PHONE: (786) 464-1000 FAX: (786) 845-7119
CERTIFICATE OF AUTHORIZATION NO. 1838

Approved | Date | Approved | Date

5/8/2006 5:27:38 PM g:\646331_north_corridor\caddd\gn\new alignment\gpe-42.dgn

STRUCTURES - GUIDEWAY (CONCRETE)

GENERAL PLAN AND ELEVATION 48

Scale 1" = 50' | Drawing SGC- 49 | Sheet 260

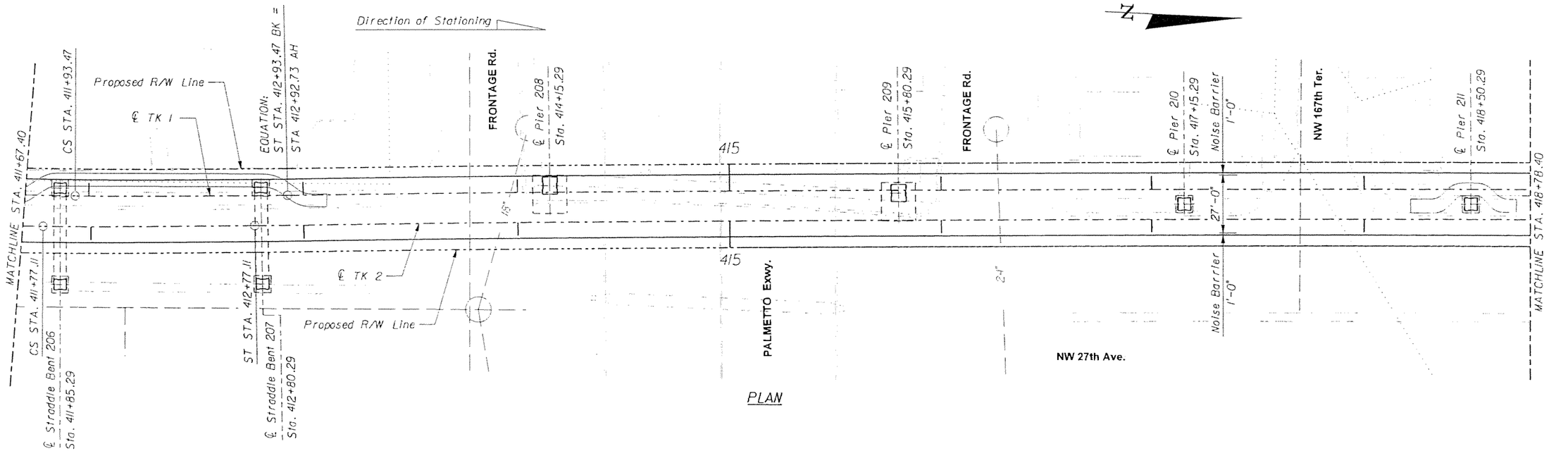

PLAN

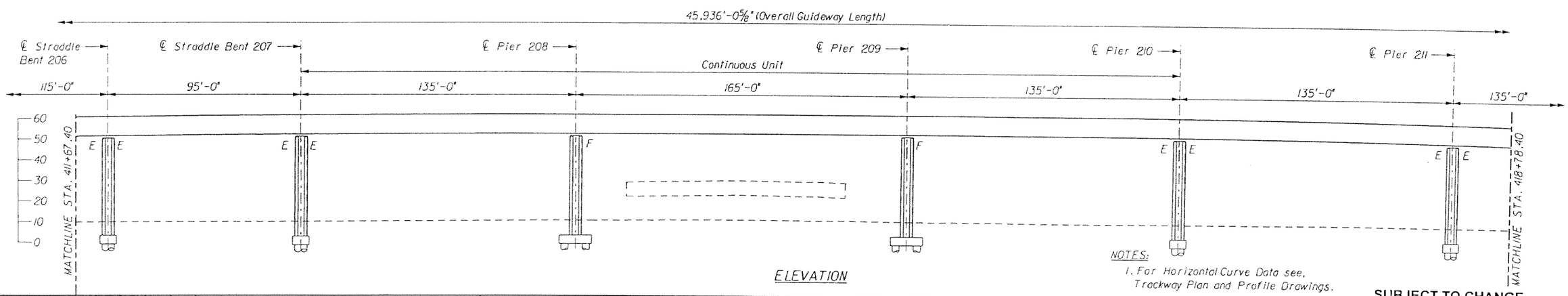

ELEVATION

NOTES:
1. For Horizontal Curve Data see, Trackway Plan and Profile Drawings.

SUBJECT TO CHANGE

GTH Designed by	1-Nov-05 Date				
KDK Drawn by	5-May-06 Date				
JER Checked by	5-May-06 Date				
TWS Approved by	5-May-06 Date	No.	Date	By / Chk	App. Revisions

NORTH CORRIDOR METRORAIL EXTENSION - PRELIMINARY ENGINEERING (100% SUBMITTAL)

MIAMI-DADE COUNTY

MIAMI-DADE TRANSIT

PARSONS
7600 CORPORATE CENTER DRIVE, SUITE 500
MIAMI, FLORIDA 33126
PHONE: (786) 464-1000 FAX: (786) 845-7119
CERTIFICATE OF AUTHORIZATION NO. 1838

Approved | Date | Approved | Date

STRUCTURES - GUIDEWAY (CONCRETE)

GENERAL PLAN AND ELEVATION 49

Scale 1" = 56' | Drawing SGC- 50 | Sheet 261

5/8/2006 5:27:44 PM g:\646331_north_corridor\cadd\dgn\new alignment\gpe-43.dgn

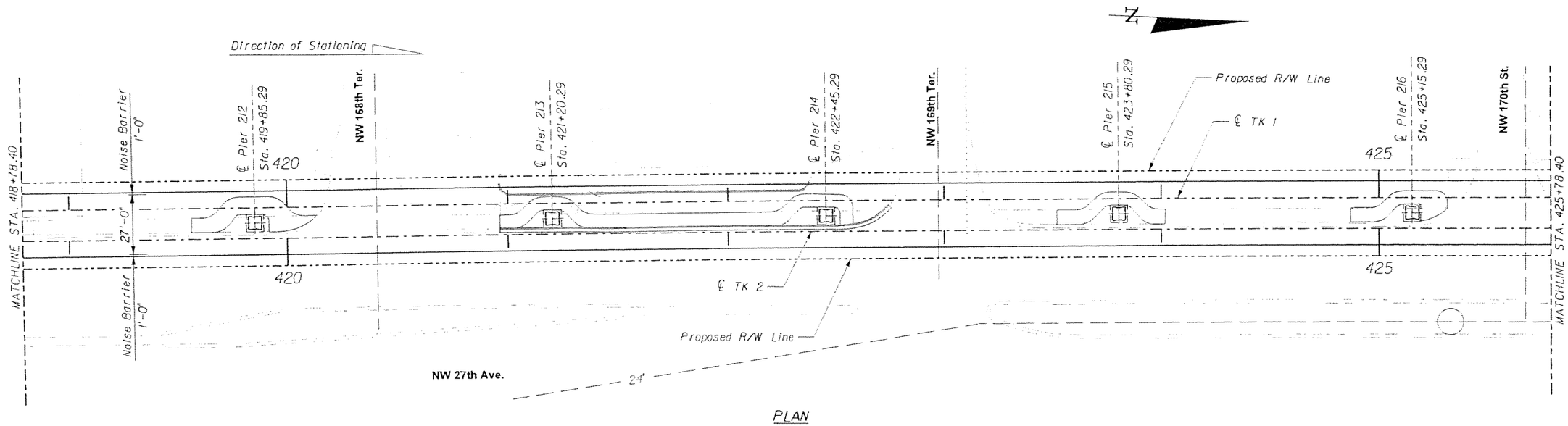

PLAN

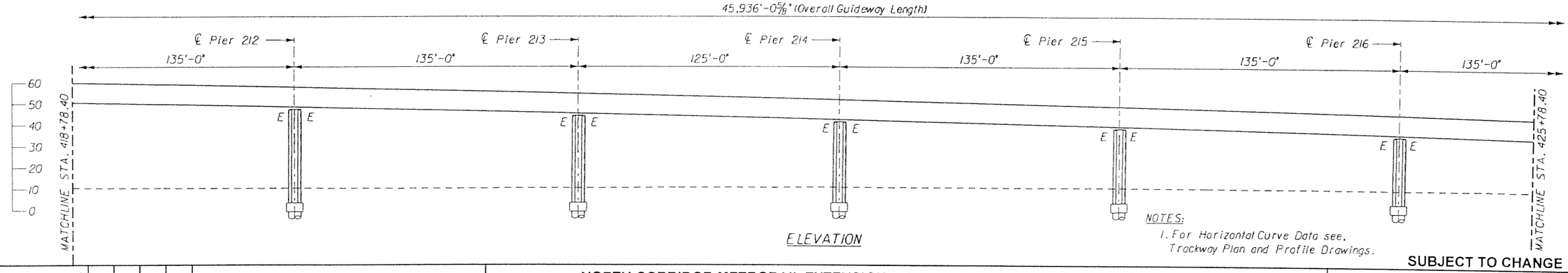

ELEVATION

NOTES:
1. For Horizontal Curve Data see, Trackway Plan and Profile Drawings.

SUBJECT TO CHANGE

GTH	1-Nov-05						
Designed by	Date						
KDK	5-May-06						
Drawn by	Date						
JER	5-May-06						
Checked by	Date						
TWS	5-May-06						
Approved by	Date	No.	Date	By / Chk	App.	Revisions	

NORTH CORRIDOR METRORAIL EXTENSION - PRELIMINARY ENGINEERING (100% SUBMITTAL)

STRUCTURES - GUIDEWAY (CONCRETE)

MIAMI-DADE COUNTY

MIAMI-DADE TRANSIT

PARSONS
7600 CORPORATE CENTER DRIVE, SUITE 500
MIAMI, FLORIDA 33126
PHONE: (786) 464-1000 FAX: (786) 845-7119
CERTIFICATE OF AUTHORIZATION NO. 1838

Approved | Date | Approved | Date

GENERAL PLAN AND ELEVATION 50

Scale 1" = 50' | Drawing SGC- 51 | Sheet 262

5/8/2006 5:27:46 PM g:\646331_north_corridor\cadd\dgn\new alignment\gpe-44.dgn

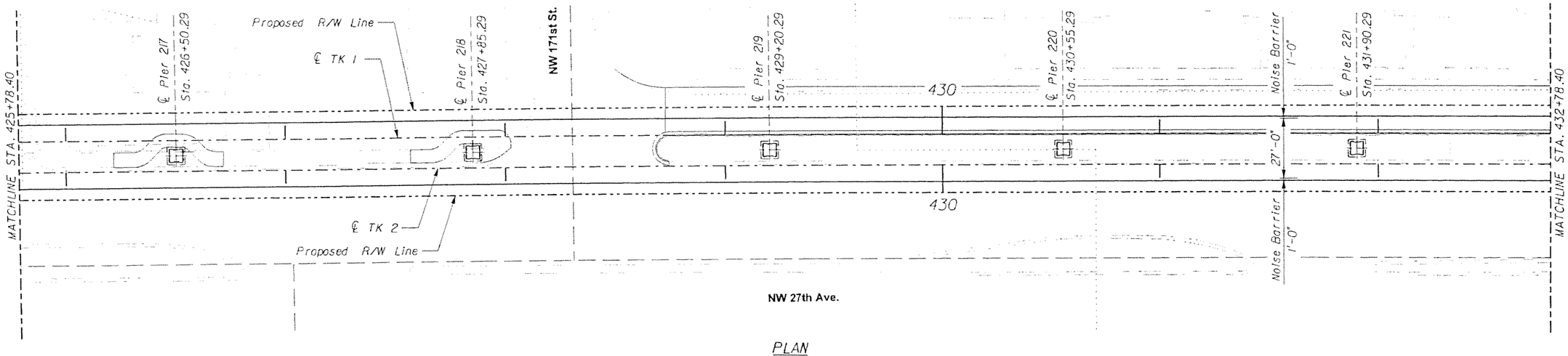

PLAN

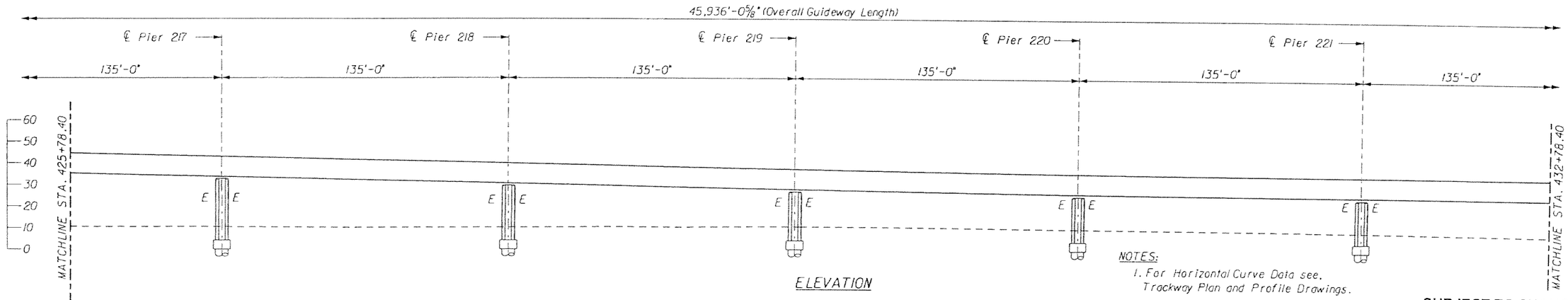

ELEVATION

NOTES:
1. For Horizontal Curve Data see, Trackway Plan and Profile Drawings.

SUBJECT TO CHANGE

GTH Designed by	1-Nov-05 Date					
KDK Drawn by	5-May-06 Date					
JER Checked by	5-May-06 Date					
TWS Approved by	5-May-06 Date	No.	Date	By / Chk	App.	Revisions

NORTH CORRIDOR METRORAIL EXTENSION - PRELIMINARY ENGINEERING (100% SUBMITTAL)

STRUCTURES - GUIDEWAY (CONCRETE)

MIAMI-DADE COUNTY

MIAMI-DADE TRANSIT

PARSONS
7600 CORPORATE CENTER DRIVE, SUITE 500
MIAMI, FLORIDA 33126
PHONE: (786) 464-1000 FAX: (786) 845-7119
CERTIFICATE OF AUTHORIZATION NO. 1838

Approved | Date | Approved | Date

GENERAL PLAN AND ELEVATION 51

Scale 1" = 50' | Drawing SGC- 52 | Sheet 263

5/8/2006 5:27:49 PM g:\840331_north_corridor\cadd\dgn\new alignment\gpe-45.dgn

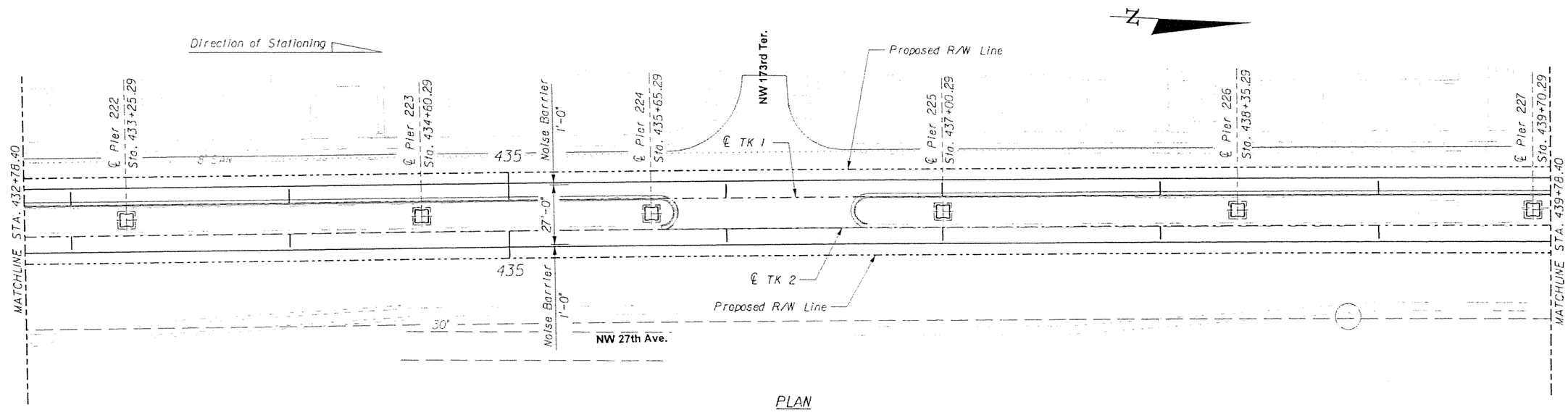

PLAN

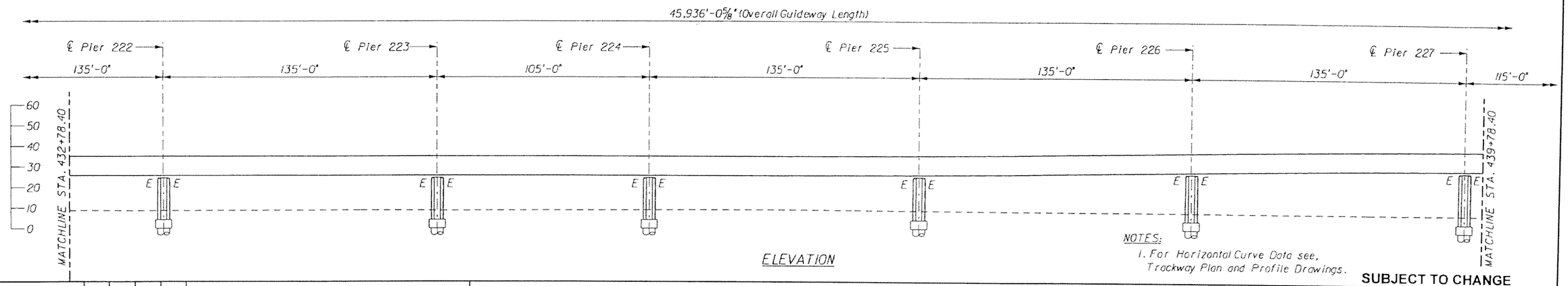

ELEVATION

NOTES:
1. For Horizontal Curve Data see, Trackway Plan and Profile Drawings.

SUBJECT TO CHANGE

GTH Designed by	1-Nov-05 Date				
KDK Drawn by	5-May-06 Date				
JER Checked by	5-May-06 Date				
TWS Approved by	5-May-06 Date	No.	Date	By / Chk	App. Revisions

NORTH CORRIDOR METRORAIL EXTENSION - PRELIMINARY ENGINEERING (100% SUBMITTAL)

STRUCTURES - GUIDEWAY (CONCRETE)

MIAMI-DADE COUNTY

MIAMI-DADE TRANSIT

PARSONS
7600 CORPORATE CENTER DRIVE, SUITE 500
MIAMI, FLORIDA 33126
PHONE: (786) 464-1000 FAX: (786) 845-7119
CERTIFICATE OF AUTHORIZATION NO. 1838

Approved | Date | Approved | Date

GENERAL PLAN AND ELEVATION 52

Scale 1" = 50' | Drawing SGC- 53 | Sheet 264

5/8/2006 5:27:55 PM g:\646331_north_corridor\cadd\dgn\new alignment\gpe-46.dgn

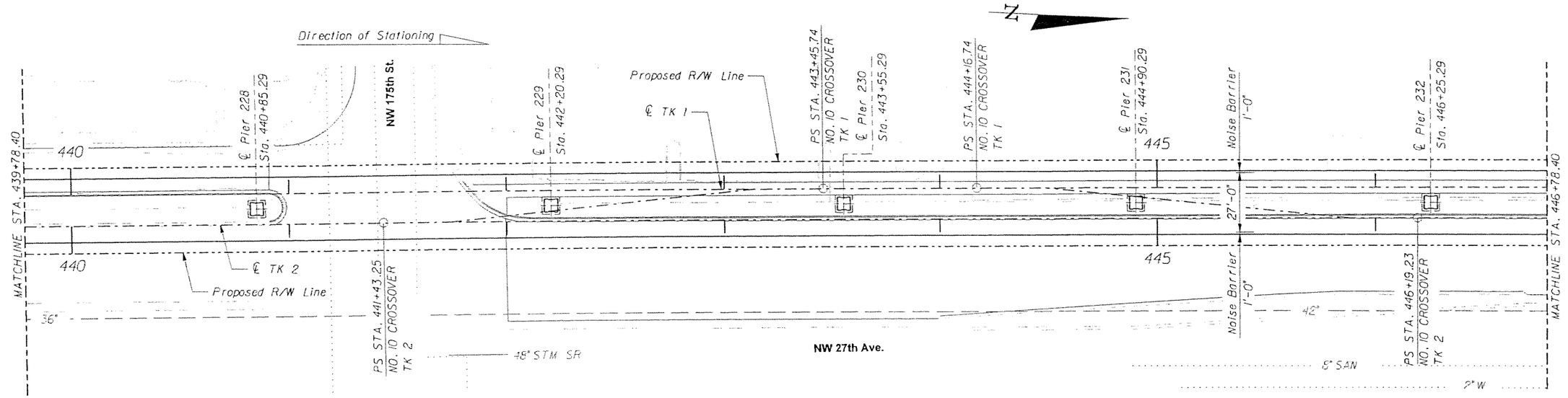

PLAN

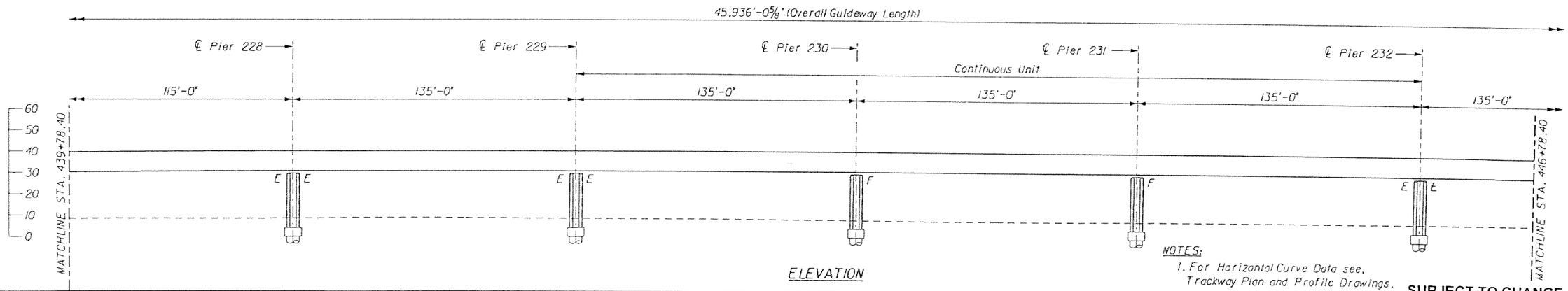

ELEVATION

NOTES:
1. For Horizontal Curve Data see, Trackway Plan and Profile Drawings.

SUBJECT TO CHANGE

GTH Designed by	1-Nov-05 Date					
KDK Drawn by	5-May-06 Date					
JER Checked by	5-May-06 Date					
TWS Approved by	5-May-06 Date	No.	Date	By / Chk	App.	Revisions

NORTH CORRIDOR METRORAIL EXTENSION - PRELIMINARY ENGINEERING (100% SUBMITTAL)

MIAMI-DADE COUNTY

MIAMI-DADE TRANSIT

PARSONS
7800 CORPORATE CENTER DRIVE, SUITE 500
MIAMI, FLORIDA 33126
PHONE: (786) 464-1000 FAX: (785) 845-7119
CERTIFICATE OF AUTHORIZATION NO. 1638

Approved | Date

Approved | Date

STRUCTURES - GUIDEWAY (CONCRETE)

GENERAL PLAN AND ELEVATION 53

Scale 1" = 50' | Drawing SGC- 54 | Sheet 265

5/8/2006 5:27:57 PM g:\846331_north_corridor\cadd\dgn\new alignment\gpe-47.dgn

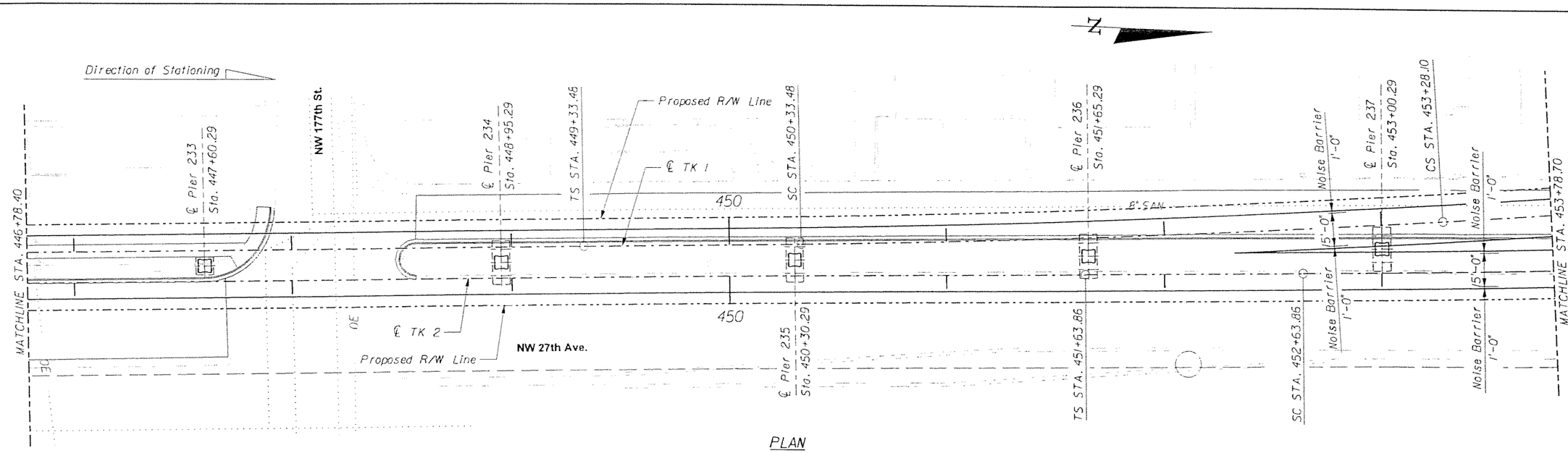

PLAN

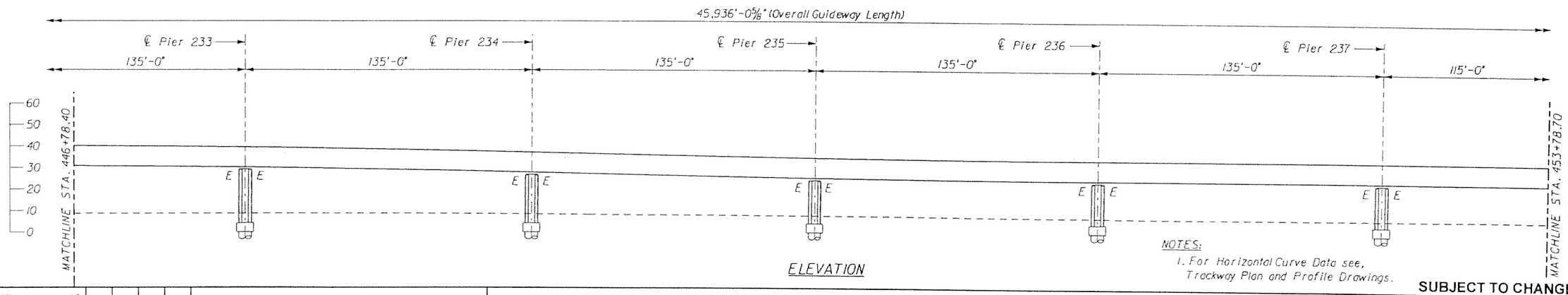

ELEVATION

NOTES:
1. For Horizontal Curve Data see, Trackway Plan and Profile Drawings.

SUBJECT TO CHANGE

GTH Designed by	1-Nov-05 Date					
KDK Drawn by	5-May-06 Date					
JER Checked by	5-May-06 Date					
TWS Approved by	5-May-06 Date	No.	Date	By / Chk	App.	Revisions

NORTH CORRIDOR METRORAIL EXTENSION - PRELIMINARY ENGINEERING (100% SUBMITTAL)

STRUCTURES - GUIDEWAY (CONCRETE)

MIAMI-DADE COUNTY

MIAMI-DADE TRANSIT

PARSONS
7600 CORPORATE CENTER DRIVE, SUITE 500
MIAMI, FLORIDA 33126
PHONE: (786) 464-1000 FAX: (786) 845-7119
CERTIFICATE OF AUTHORIZATION NO. 1838

Approved | Date | Approved | Date

GENERAL PLAN AND ELEVATION 54

Scale 1" = 50' | Drawing SGC- 55 | Sheet 266

5/8/2006 5:28:00 PM g:\646331_north_corridor\cadd\dgn\new alignment\gpe-48.dgn

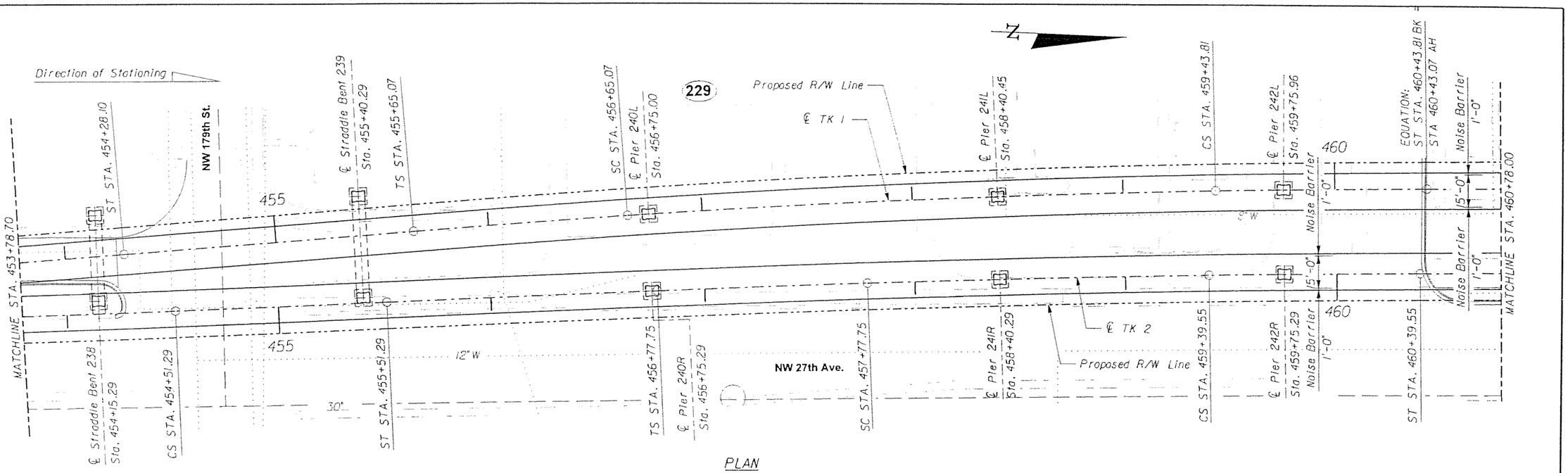

PLAN

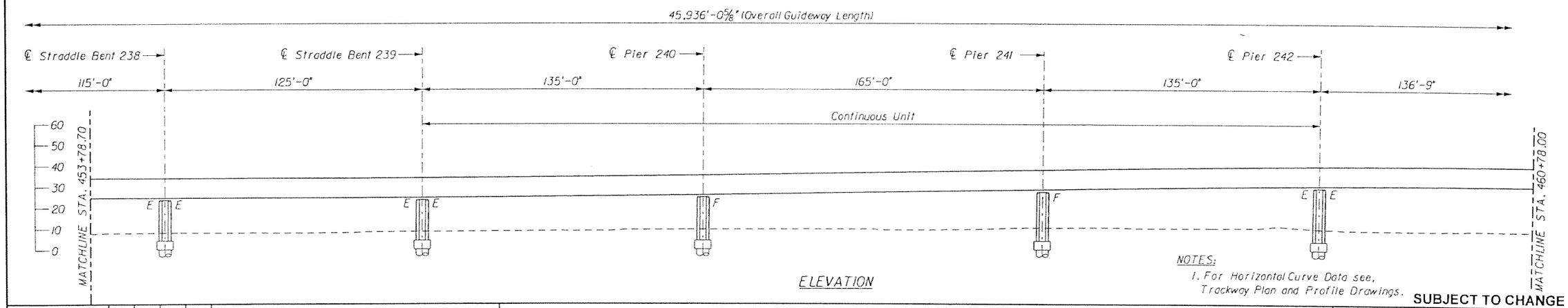

ELEVATION

NOTES:
1. For Horizontal Curve Data see, Trackway Plan and Profile Drawings.

SUBJECT TO CHANGE

GTH	1-Nov-05					
Designed by	Date					
KDK	5-May-06					
Drawn by	Date					
JER	5-May-06					
Checked by	Date					
TWS	5-May-06					
Approved by	Date	No.	Date	By / Chk	App.	Revisions

NORTH CORRIDOR METRORAIL EXTENSION - PRELIMINARY ENGINEERING (100% SUBMITTAL)

STRUCTURES - GUIDEWAY (CONCRETE)

MIAMI-DADE COUNTY

MIAMI-DADE TRANSIT

PARSONS
7600 CORPORATE CENTER DRIVE, SUITE 500
MIAMI, FLORIDA 33126
PHONE: (786) 464-1000 FAX: (786) 845-7119
CERTIFICATE OF AUTHORIZATION NO. 1838

GENERAL PLAN AND ELEVATION 55

Approved	Date	Approved	Date	Scale	Drawing	Sheet
				1" = 50'	SGC- 56	267

5/8/2006 5:28:06 PM g:\646331_north_corridor\cadd\dgn\new alignment\gpe-48.dgn

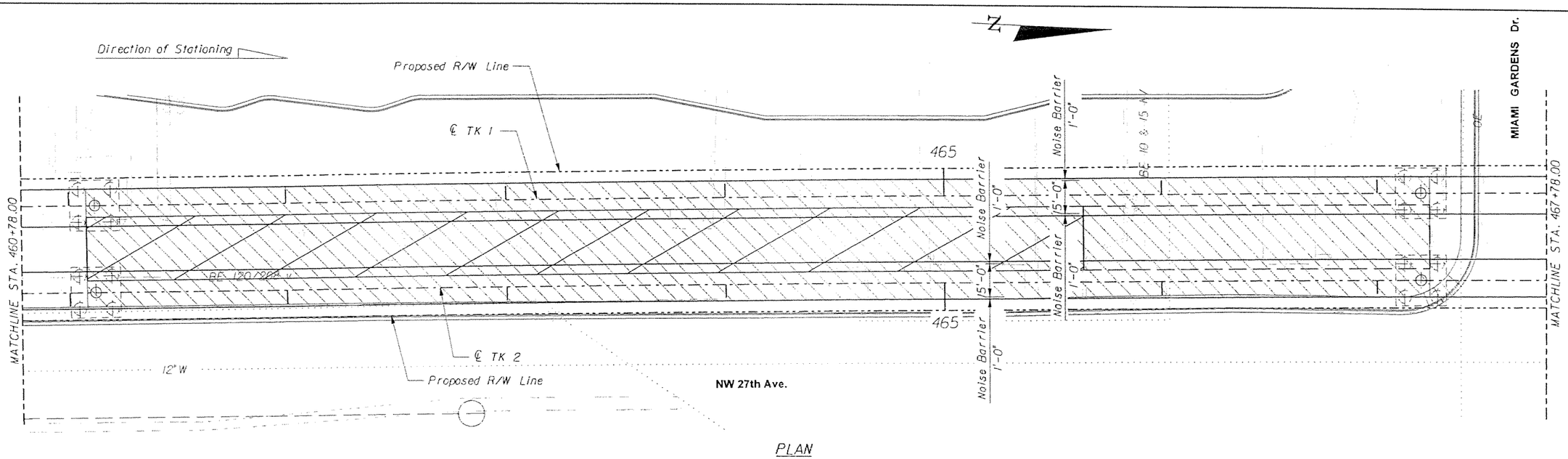

PLAN

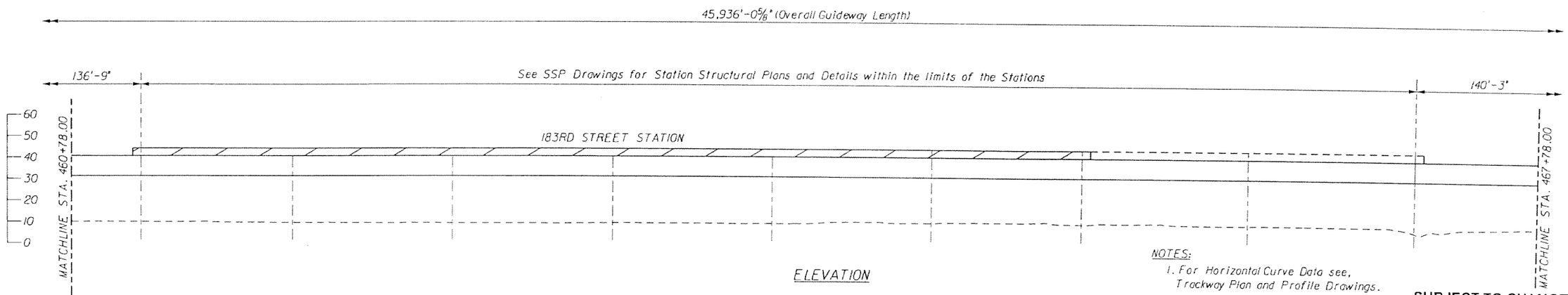

ELEVATION

NOTES:
1. For Horizontal Curve Data see, Trackway Plan and Profile Drawings.

SUBJECT TO CHANGE

GTH Designed by	1-Nov-05 Date					
KDK Drawn by	5-May-06 Date					
JER Checked by	5-May-06 Date					
TWS Approved by	5-May-06 Date	No.	Date	By / Chk	App.	Revisions

NORTH CORRIDOR METRORAIL EXTENSION - PRELIMINARY ENGINEERING (100% SUBMITTAL)

MIAMI-DADE COUNTY

MIAMI-DADE TRANSIT

PARSONS
7600 CORPORATE CENTER DRIVE, SUITE 500
MIAMI, FLORIDA 33126
PHONE: (786) 464-1000 FAX: (786) 845-7119
CERTIFICATE OF AUTHORIZATION NO. 1838

Approved | Date

Approved | Date

STRUCTURES - GUIDEWAY (CONCRETE)

GENERAL PLAN AND ELEVATION 56

Scale 1" = 50' | Drawing SGC- 57 | Sheet 268

5/8/2006 5:28:08 PM g:\646331_north_corridor\cadd\dgn\new alignment\gpe-50.dgn

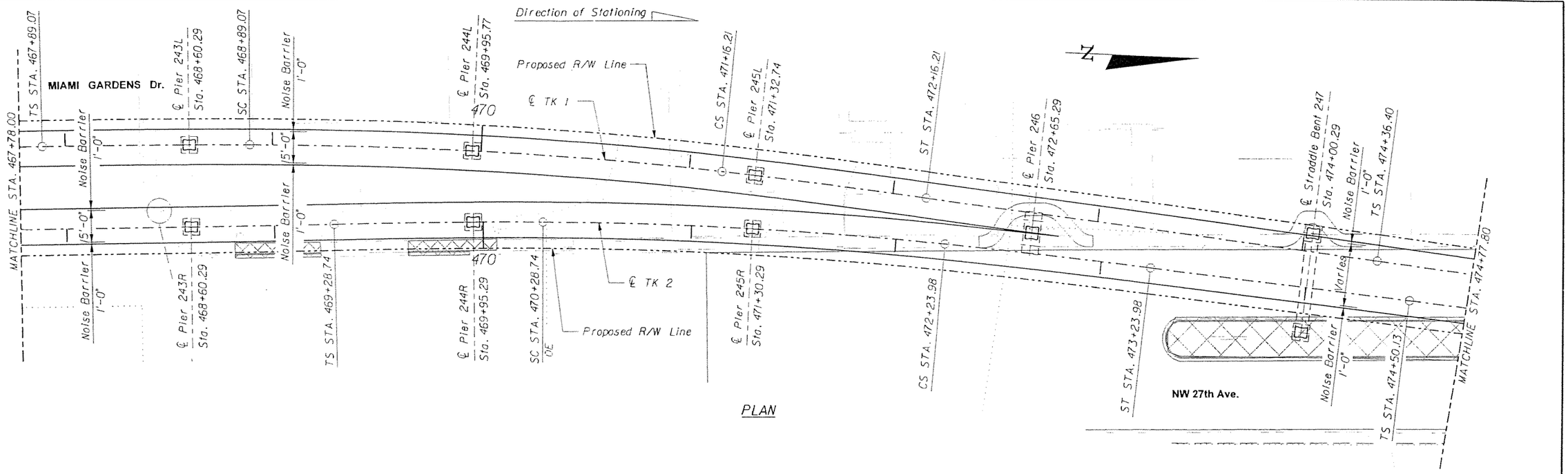

PLAN

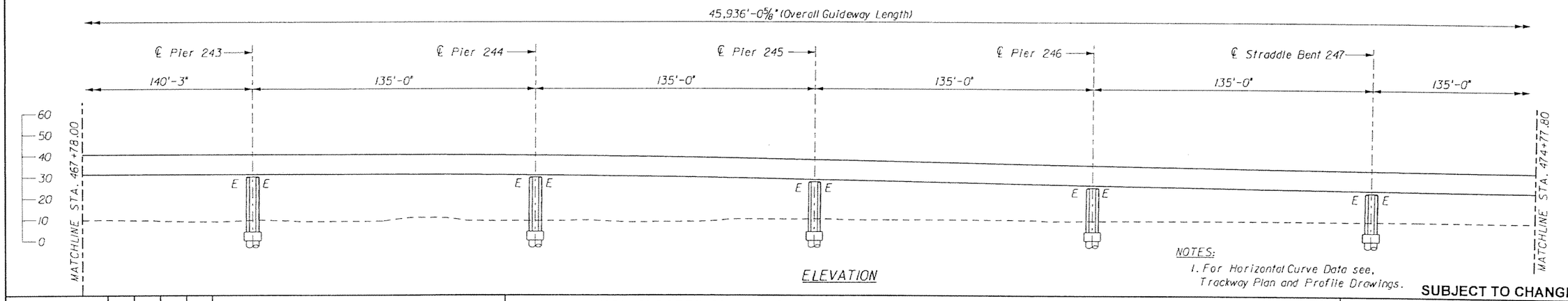

ELEVATION

NOTES:
1. For Horizontal Curve Data see, Trackway Plan and Profile Drawings.

SUBJECT TO CHANGE

GTH Designed by	1-Nov-05 Date					
KDK Drawn by	5-May-06 Date					
JER Checked by	5-May-06 Date					
TWS Approved by	5-May-06 Date	No.	Date	By / Chk	App.	Revisions

NORTH CORRIDOR METRORAIL EXTENSION - PRELIMINARY ENGINEERING (100% SUBMITTAL)

STRUCTURES - GUIDEWAY (CONCRETE)

MIAMI-DADE COUNTY

MIAMI-DADE TRANSIT

PARSONS
7600 CORPORATE CENTER DRIVE, SUITE 500
MIAMI, FLORIDA 33126
PHONE: (786) 464-1000 FAX: (786) 845-7119
CERTIFICATE OF AUTHORIZATION NO. 1838

Approved | Date | Approved | Date

GENERAL PLAN AND ELEVATION 57

Scale 1" = 50' | Drawing SGC- 58 | Sheet 269

5/8/2006 5:28:14 PM g:\646331_north_corridor\cadd\dgn\new alignment\gpe-51.dgn

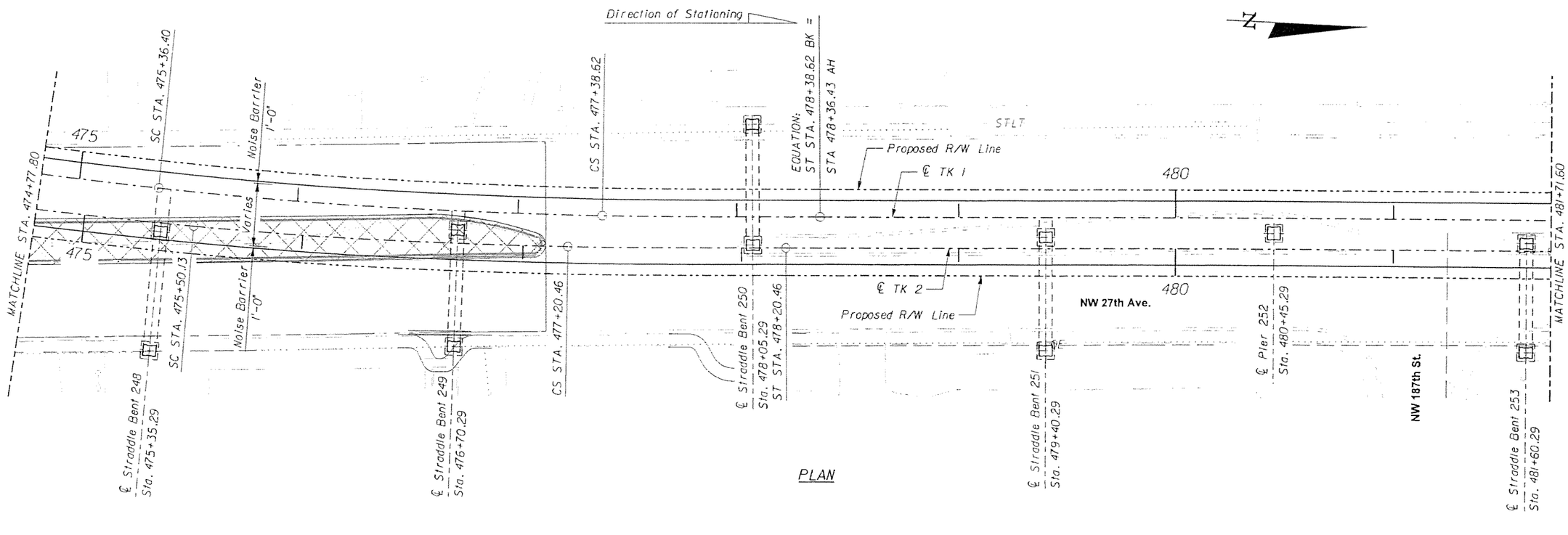

NOTES:

1. For Horizontal Curve Data see, Trackway Plan and Profile Drawings.

SUBJECT TO CHANGE

GTH Designed by	1-Nov-05 Date					
KDK Drawn by	5-May-06 Date					
JER Checked by	5-May-06 Date					
TWS Approved by	5-May-06 Date	No.	Date	By / Chk	App.	Revisions

NORTH CORRIDOR METRORAIL EXTENSION - PRELIMINARY ENGINEERING (100% SUBMITTAL)

STRUCTURES - GUIDEWAY (CONCRETE)

MIAMI-DADE COUNTY

MIAMI-DADE TRANSIT

PARSONS
7600 CORPORATE CENTER DRIVE, SUITE 500
MIAMI, FLORIDA 33126
PHONE: (786) 464-1000 FAX: (786) 845-7119
CERTIFICATE OF AUTHORIZATION NO. 1838

Approved | Date | Approved | Date

GENERAL PLAN AND ELEVATION 58

Scale 1" = 50' | Drawing SGC- 59 | Sheet 270

5/8/2006 5:28:17 PM g:\645331_north_corridor\cadd\dgn\new alignment\gpe-52.dgn

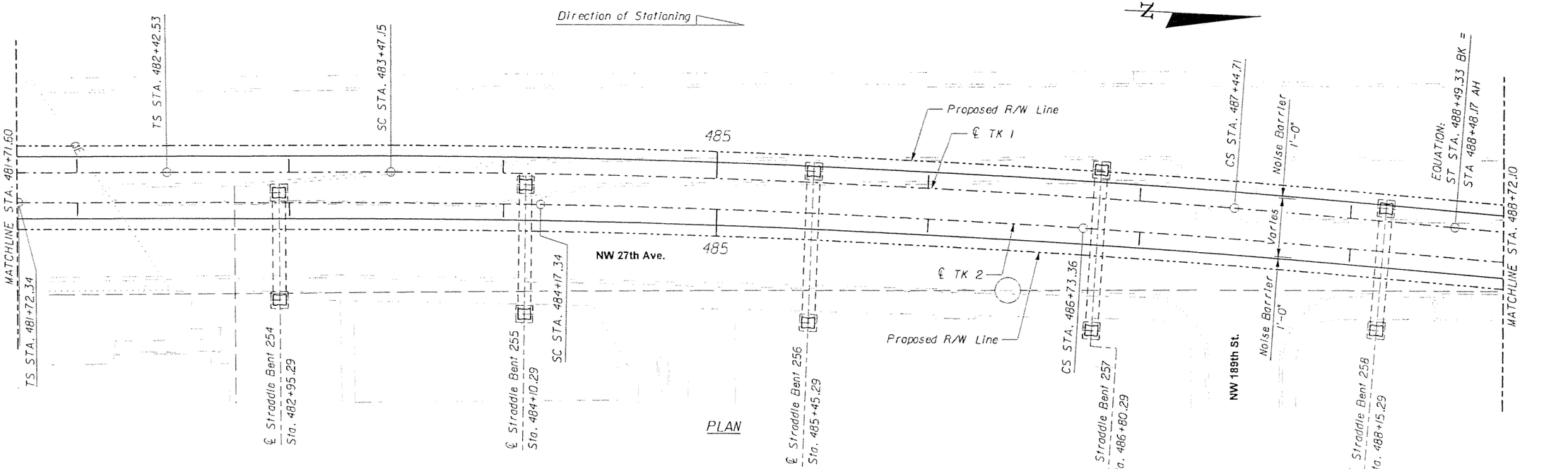

PLAN

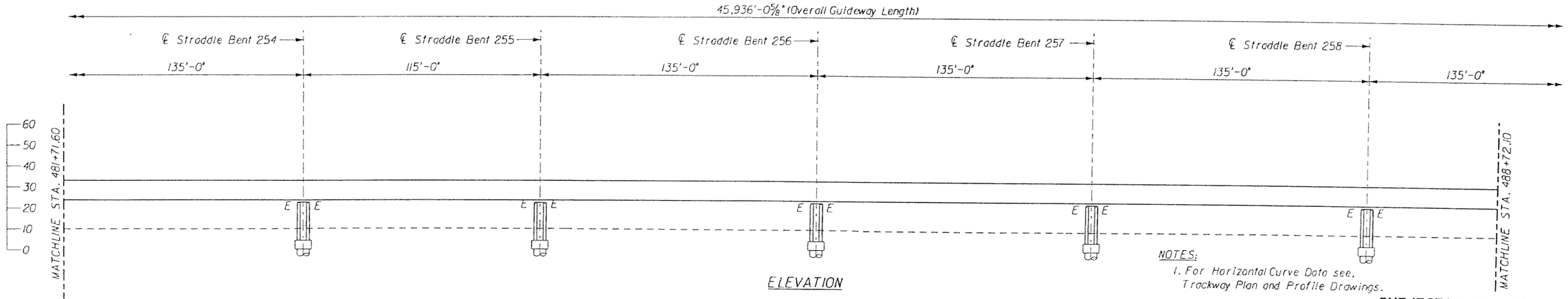

ELEVATION

NOTES:
1. For Horizontal Curve Data see, Trackway Plan and Profile Drawings.

SUBJECT TO CHANGE

GTH Designed by	1-Nov-05 Date				
KDK Drawn by	5-May-06 Date				
JER Checked by	5-May-06 Date				
TWS Approved by	5-May-06 Date	No.	Date	By / Chk.	App.	Revisions

NORTH CORRIDOR METRORAIL EXTENSION - PRELIMINARY ENGINEERING (100% SUBMITTAL)

STRUCTURES - GUIDEWAY (CONCRETE)

MIAMI-DADE COUNTY

MIAMI-DADE TRANSIT

PARSONS
7600 CORPORATE CENTER DRIVE, SUITE 500
MIAMI, FLORIDA 33126
PHONE: (786) 464-1000 FAX: (786) 845-7119
CERTIFICATE OF AUTHORIZATION NO. 1838

GENERAL PLAN AND ELEVATION 59

Approved | Date | Approved | Date

Scale 1" = 50' | Drawing SGC- 60 | Sheet 271

5/8/2006 5:28:20 PM g:\646331_north_corridor\cadd\dgn\new alignmentfgpe-53.dgn

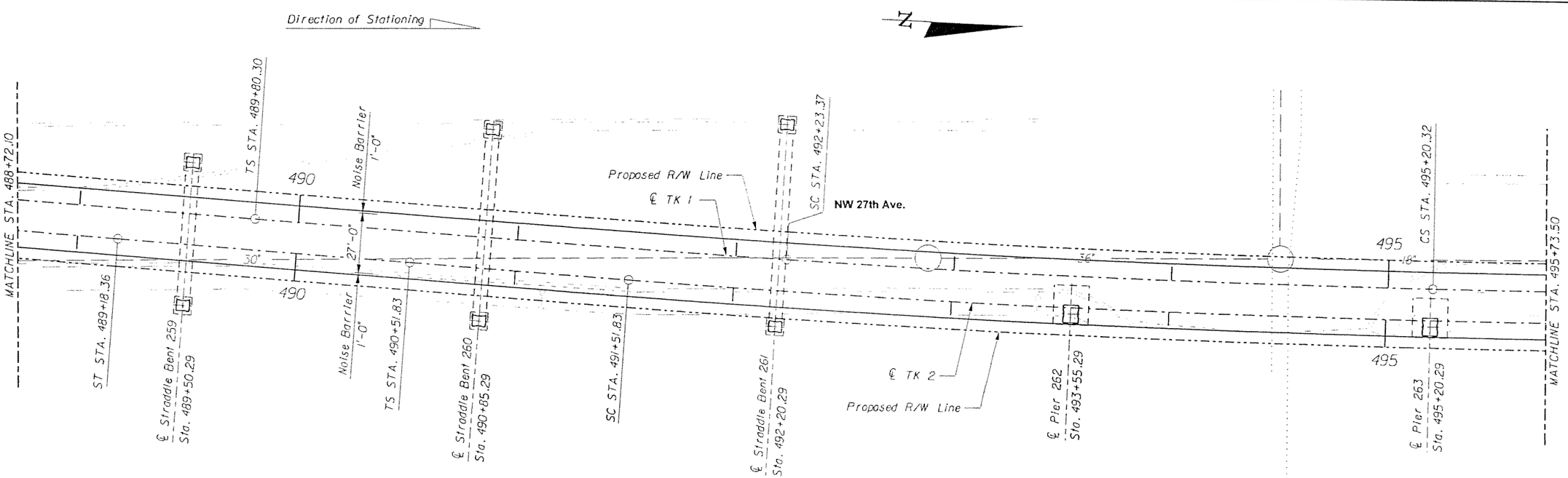

PLAN

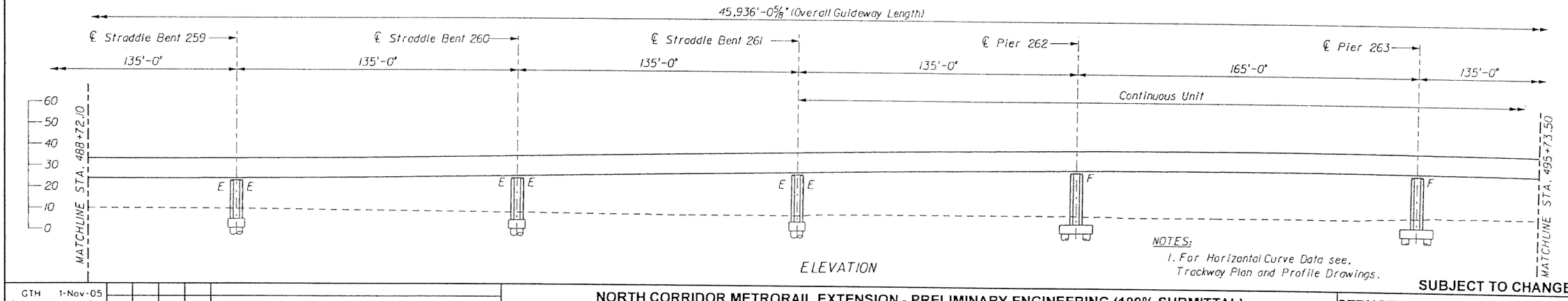

ELEVATION

NOTES:
1. For Horizontal Curve Data see, Trackway Plan and Profile Drawings.

SUBJECT TO CHANGE

GTH Designed by	1-Nov-05 Date					
KDK Drawn by	5-May-06 Date					
JER Checked by	5-May-06 Date					
TWS Approved by	5-May-06 Date	No.	Date	By / Chk	App.	Revisions

NORTH CORRIDOR METRORAIL EXTENSION - PRELIMINARY ENGINEERING (100% SUBMITTAL)

MIAMI-DADE COUNTY

MIAMI-DADE TRANSIT

PARSONS
7600 CORPORATE CENTER DRIVE, SUITE 500
MIAMI, FLORIDA 33126
PHONE: (786) 464-1000 FAX: (786) 845-7119
CERTIFICATE OF AUTHORIZATION NO. 1838

Approved | Date

Approved | Date

STRUCTURES - GUIDEWAY (CONCRETE)

GENERAL PLAN AND ELEVATION 60

Scale 1" = 50' | Drawing SGC- 61 | Sheet 272

5/8/2006 5:28:26 PM g:\646331_north_corridor\cadd\dgn\new alignment\gpe-54.dgn

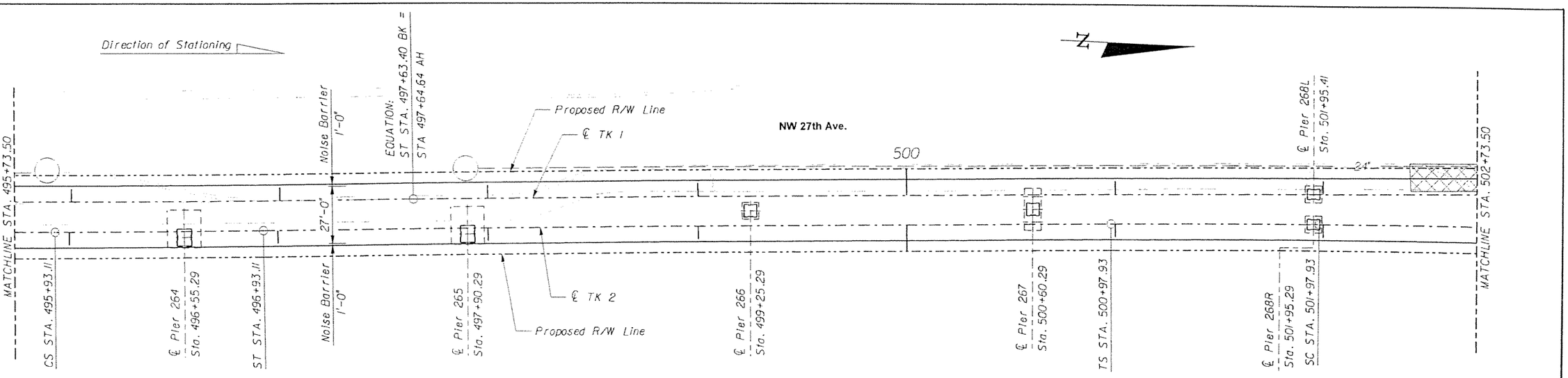

PLAN

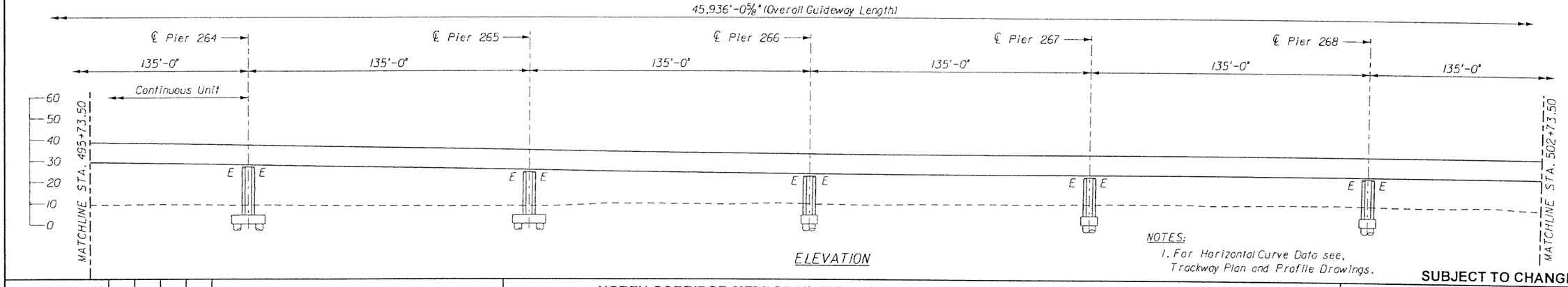

ELEVATION

NOTES:
1. For Horizontal Curve Data see, Trackway Plan and Profile Drawings.

SUBJECT TO CHANGE

GTH Designed by	1-Nov-05 Date					
KDK Drawn by	5-May-06 Date					
JER Checked by	5-May-06 Date					
TWS Approved by	5-May-06 Date	No.	Date	By / Chk	App.	Revisions

NORTH CORRIDOR METRORAIL EXTENSION - PRELIMINARY ENGINEERING (100% SUBMITTAL)

STRUCTURES - GUIDEWAY (CONCRETE)

MIAMI-DADE COUNTY

MIAMI-DADE TRANSIT

PARSONS
7600 CORPORATE CENTER DRIVE, SUITE 500
MIAMI, FLORIDA 33126
PHONE: (786) 464-1000 FAX: (786) 845-7119
CERTIFICATE OF AUTHORIZATION NO. 1838

Approved | Date

Approved | Date

GENERAL PLAN AND ELEVATION 61

Scale 1"=50' | Drawing SGC- 62 | Sheet 273

5/8/2006 5:28:29 PM g:\546331_north_corridor\cadd\dgn\new alignment\gpe-55.dgn

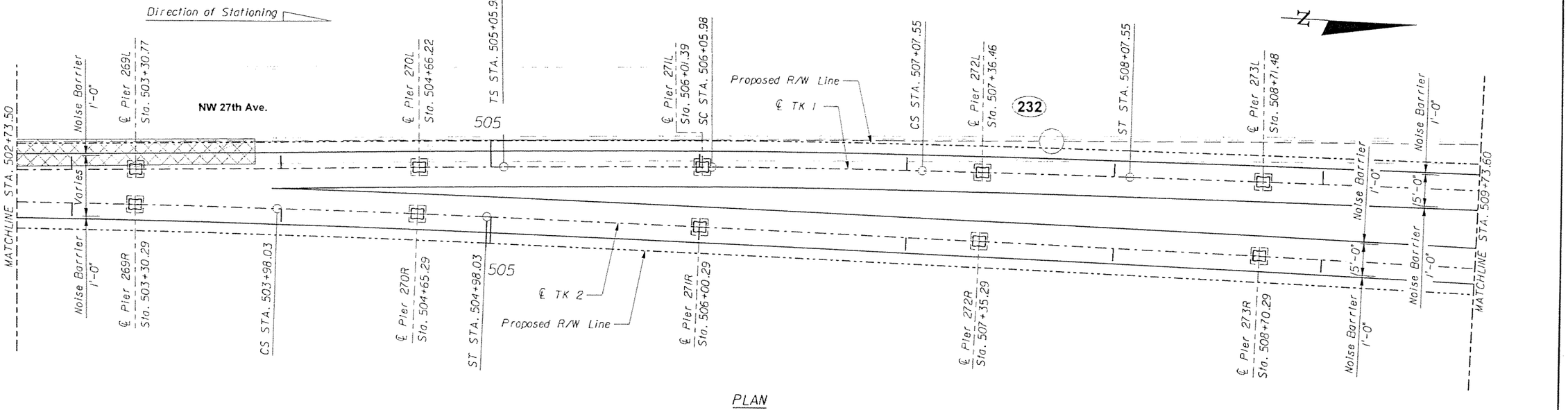

PLAN

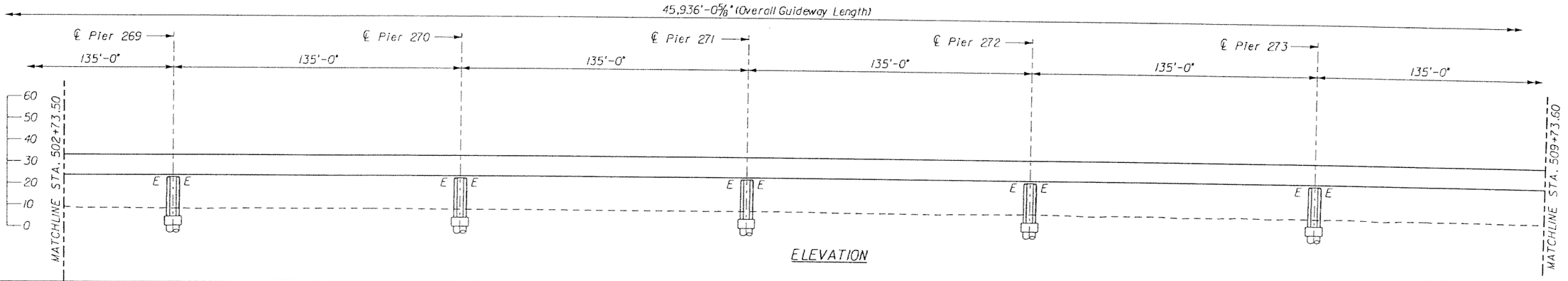

ELEVATION

SUBJECT TO CHANGE

GTH Designed by	1-Nov-05 Date				
KDK Drawn by	5-May-06 Date				
JER Checked by	5-May-06 Date				
TWS Approved by	5-May-06 Date	No.	Date	By / Chk	App. Revisions

NORTH CORRIDOR METRORAIL EXTENSION - PRELIMINARY ENGINEERING (100% SUBMITTAL)

MIAMI-DADE COUNTY

MIAMI-DADE TRANSIT

PARSONS
7600 CORPORATE CENTER DRIVE, SUITE 500
MIAMI, FLORIDA 33126
PHONE: (786) 454-1000 FAX: (786) 845-7119
CERTIFICATE OF AUTHORIZATION NO. 1838

Approved Date

Approved Date

STRUCTURES - GUIDEWAY (CONCRETE)

GENERAL PLAN AND ELEVATION 62

Scale 1" = 50' Drawing SGC- 63 Sheet 274

5/5/2006 5:28:35 PM g:\646331_north_corridor\cadd\dgn\new alignment\gpe-56.dgn

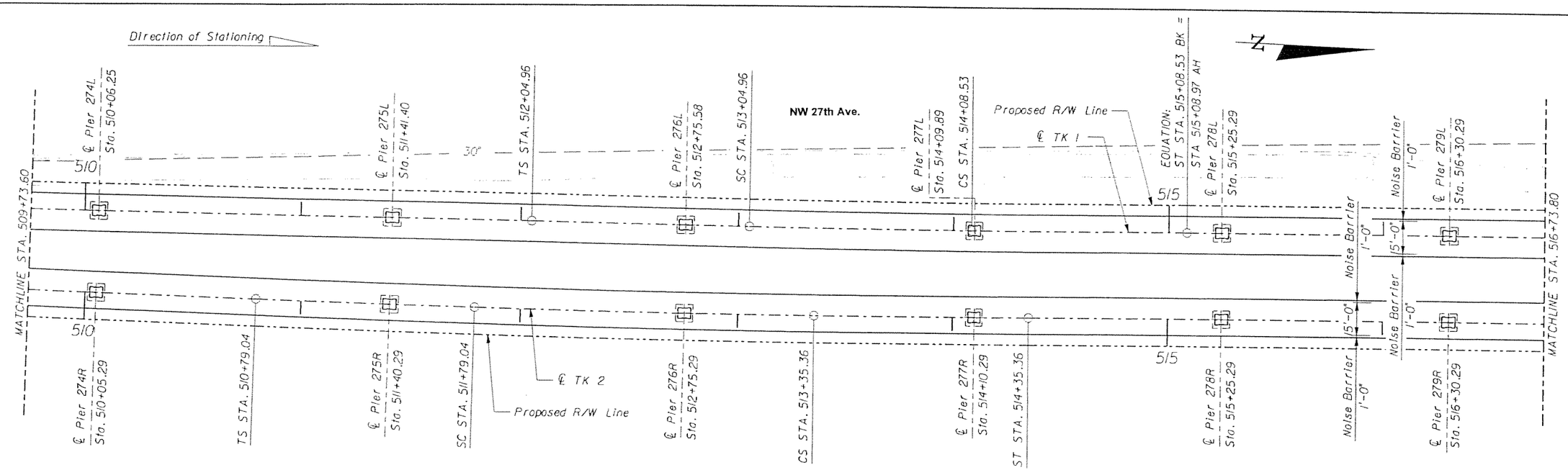

PLAN

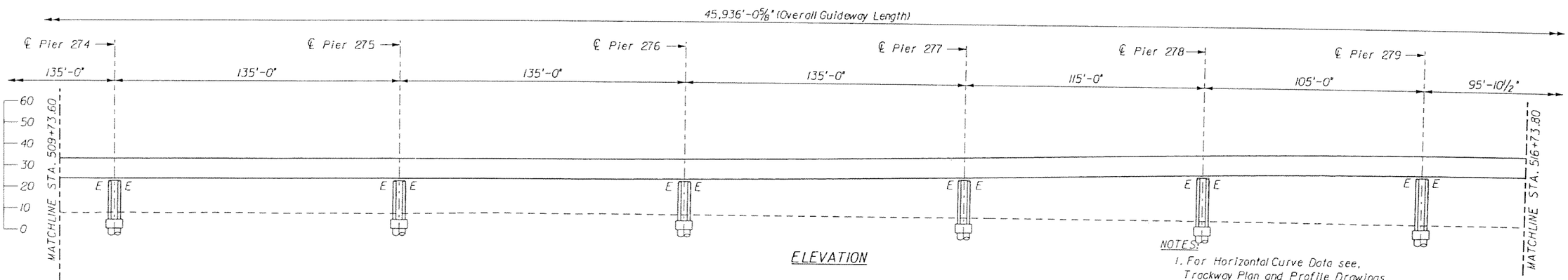

ELEVATION

NOTES:
1. For Horizontal Curve Data see, Trackway Plan and Profile Drawings.

SUBJECT TO CHANGE

GTH Designed by	1-Nov-05 Date					
KDK Drawn by	5-May-06 Date					
JER Checked by	5-May-06 Date					
TWS Approved by	5-May-06 Date	No.	Date	By / Chk	App.	Revisions

NORTH CORRIDOR METRORAIL EXTENSION - PRELIMINARY ENGINEERING (100% SUBMITTAL)

MIAMI-DADE COUNTY

MIAMI-DADE TRANSIT

PARSONS
7500 CORPORATE CENTER DRIVE, SUITE 500
MIAMI, FLORIDA 33126
PHONE: (786) 464-1000 FAX: (786) 845-7119
CERTIFICATE OF AUTHORIZATION NO. 1538

Approved | Date | Approved | Date

STRUCTURES - GUIDEWAY (CONCRETE)

GENERAL PLAN AND ELEVATION 63

Scale 1" = 50' | Drawing SGC- 64 | Sheet 275

5/8/2006 5:28:37 PM g:\646331_north_corridor\cadd\dgn\new alignment\gpe-57.dgn

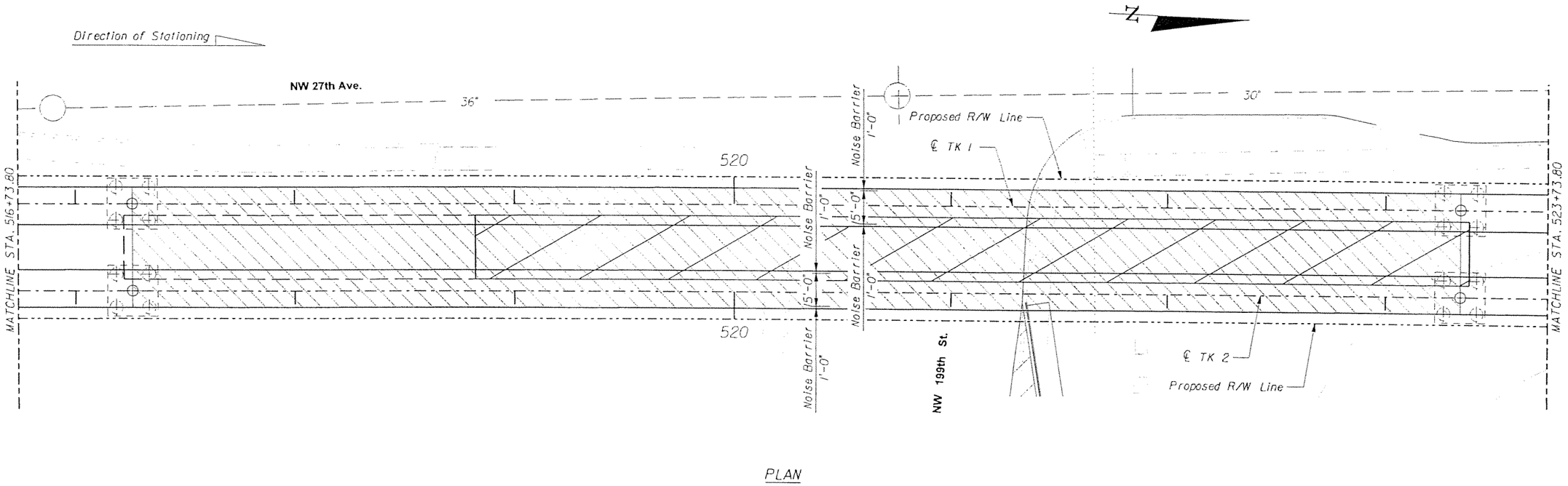

PLAN

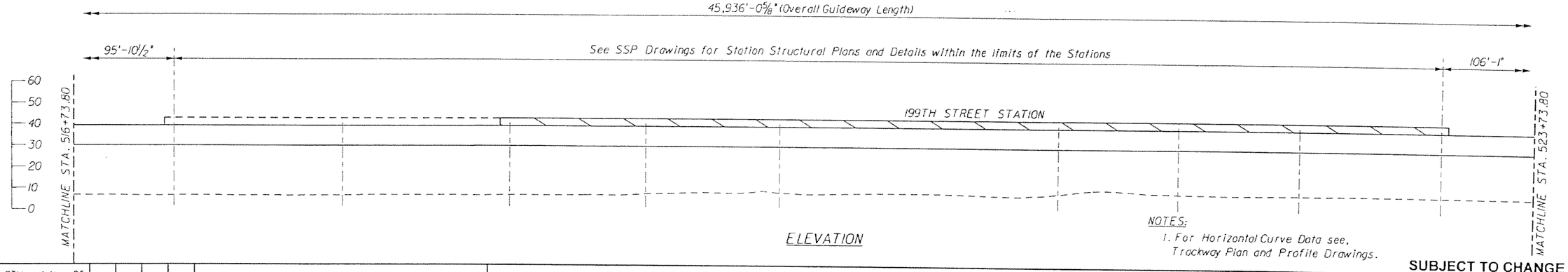

ELEVATION

NOTES:

1. For Horizontal Curve Data see, Trackway Plan and Profile Drawings.

SUBJECT TO CHANGE

GTH	1-Nov-05					
Designed by	Date					
KDK	5-May-06					
Drawn by	Date					
JER	5-May-06					
Checked by	Date					
TWS	5-May-06					
Approved by	Date	No.	Date	By / Chk	App.	Revisions

NORTH CORRIDOR METRORAIL EXTENSION - PRELIMINARY ENGINEERING (100% SUBMITTAL)

STRUCTURES - GUIDEWAY (CONCRETE)

MIAMI-DADE COUNTY

MIAMI-DADE TRANSIT

PARSONS
7600 CORPORATE CENTER DRIVE, SUITE 500
MIAMI, FLORIDA 33126
PHONE: (786) 464-1000 FAX: (786) 845-7119
CERTIFICATE OF AUTHORIZATION NO. 1838

Approved | Date | Approved | Date

GENERAL PLAN AND ELEVATION 64

Scale 1" = 50' | Drawing SGC- 65 | Sheet 276

5/8/2006 5:28:39 PM g:\646331_north_corridor\caddd\dgn\new alignment\gpe-58.dgn

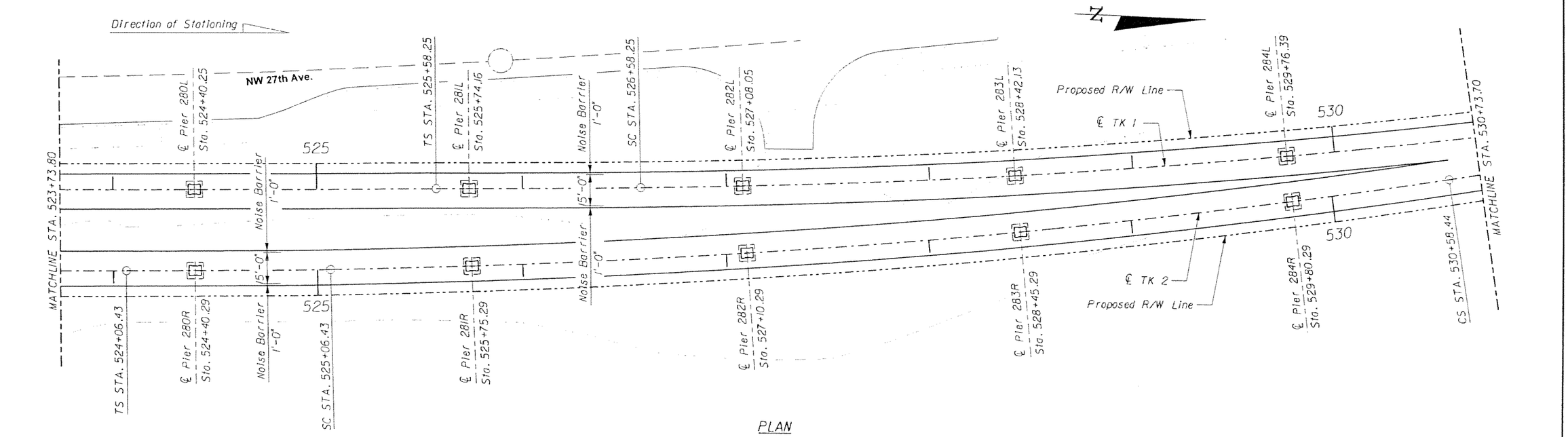

PLAN

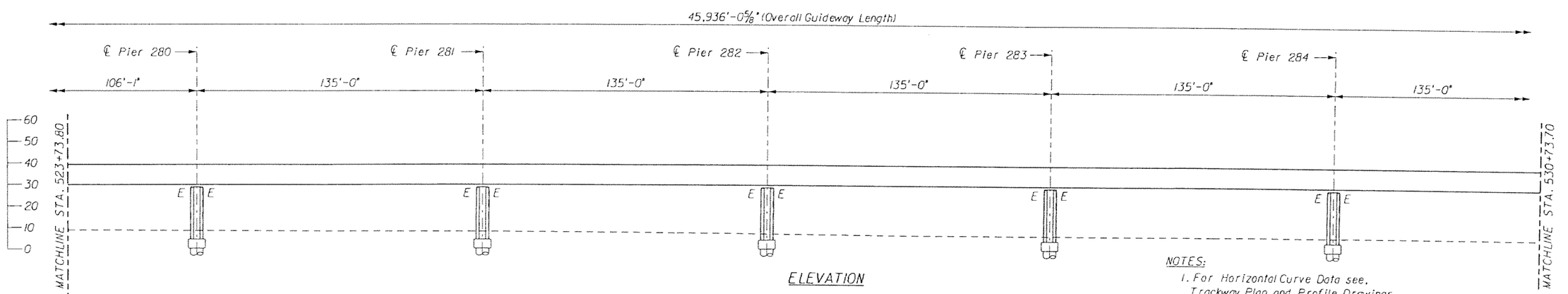

ELEVATION

NOTES:
1. For Horizontal Curve Data see, Trackway Plan and Profile Drawings.

SUBJECT TO CHANGE

GTH Designed by	1-Nov-05 Date						
KDK Drawn by	5-May-06 Date						
JER Checked by	5-May-06 Date						
TWS Approved by	5-May-06 Date	No.	Date	By / Chk	App.	Revisions	

NORTH CORRIDOR METRORAIL EXTENSION - PRELIMINARY ENGINEERING (100% SUBMITTAL)

MIAMI-DADE COUNTY

MIAMI-DADE TRANSIT

PARSONS
7600 CORPORATE CENTER DRIVE, SUITE 500
MIAMI, FLORIDA 33126
PHONE: (786) 464-1000 FAX: (786) 845-7119
CERTIFICATE OF AUTHORIZATION NO. 1838

Approved | Date

Approved | Date

STRUCTURES - GUIDEWAY (CONCRETE)

GENERAL PLAN AND ELEVATION 65

Scale 1" = 50' | Drawing SGC- 66 | Sheet 277

5/8/2006 5:28:46 PM g:\646331_north_corridor\cadd\dgn\new alignment\gpe-59.dgn

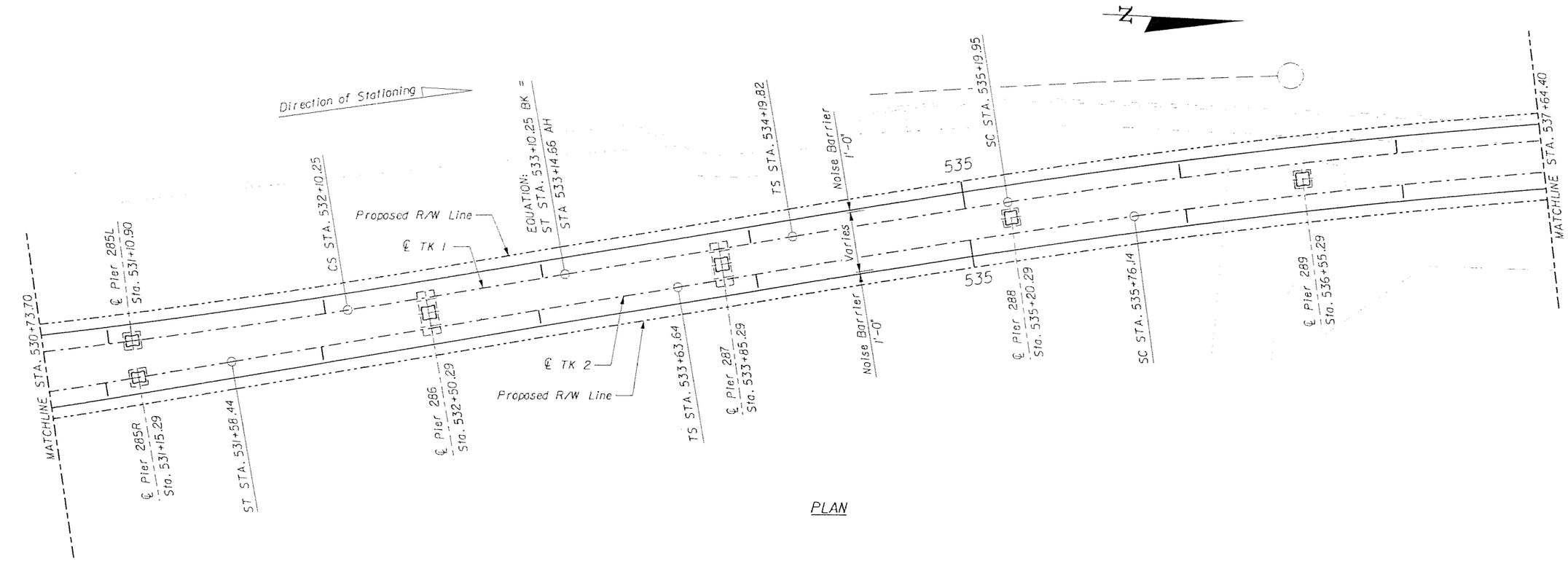

PLAN

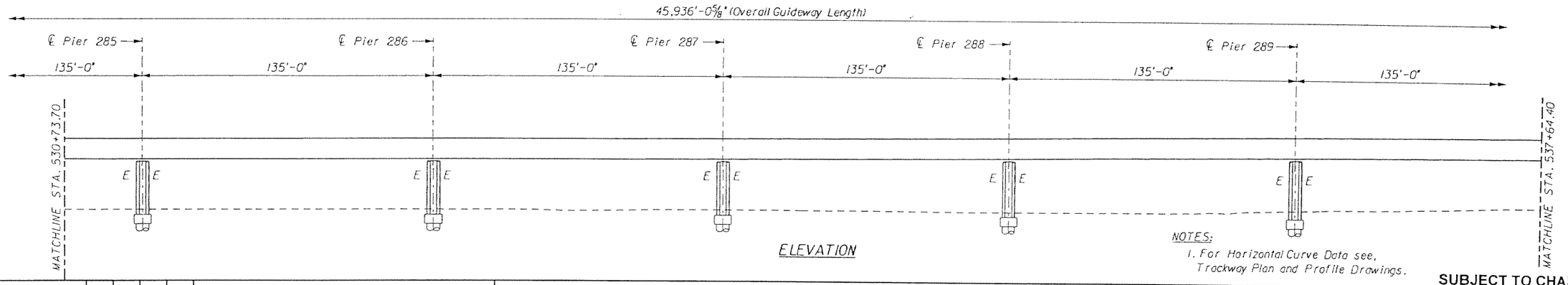

ELEVATION

NOTES:
1. For Horizontal Curve Data see, Trackway Plan and Profile Drawings.

SUBJECT TO CHANGE

GTH Designed by	1-Nov-05 Date					
KDK Drawn by	5-May-06 Date					
JER Checked by	5-May-06 Date					
TWS Approved by	5-May-06 Date	No.	Date	By / Chk	App.	Revisions

NORTH CORRIDOR METRORAIL EXTENSION - PRELIMINARY ENGINEERING (100% SUBMITTAL)

STRUCTURES - GUIDEWAY (CONCRETE)

MIAMI-DADE COUNTY

MIAMI-DADE TRANSIT

PARSONS
7600 CORPORATE CENTER DRIVE, SUITE 500
MIAMI, FLORIDA 33126
PHONE: (786) 464-1000 FAX: (786) 845-7119
CERTIFICATE OF AUTHORIZATION NO. 1838

Approved | Date

Approved | Date

GENERAL PLAN AND ELEVATION 66

Scale 1" = 50' | Drawing SGC- 67 | Sheet 278

5/5/2006 5:28:48 PM g:\646331_north_corridor\cadd\dgn\new alignment\gpe-60.dgn

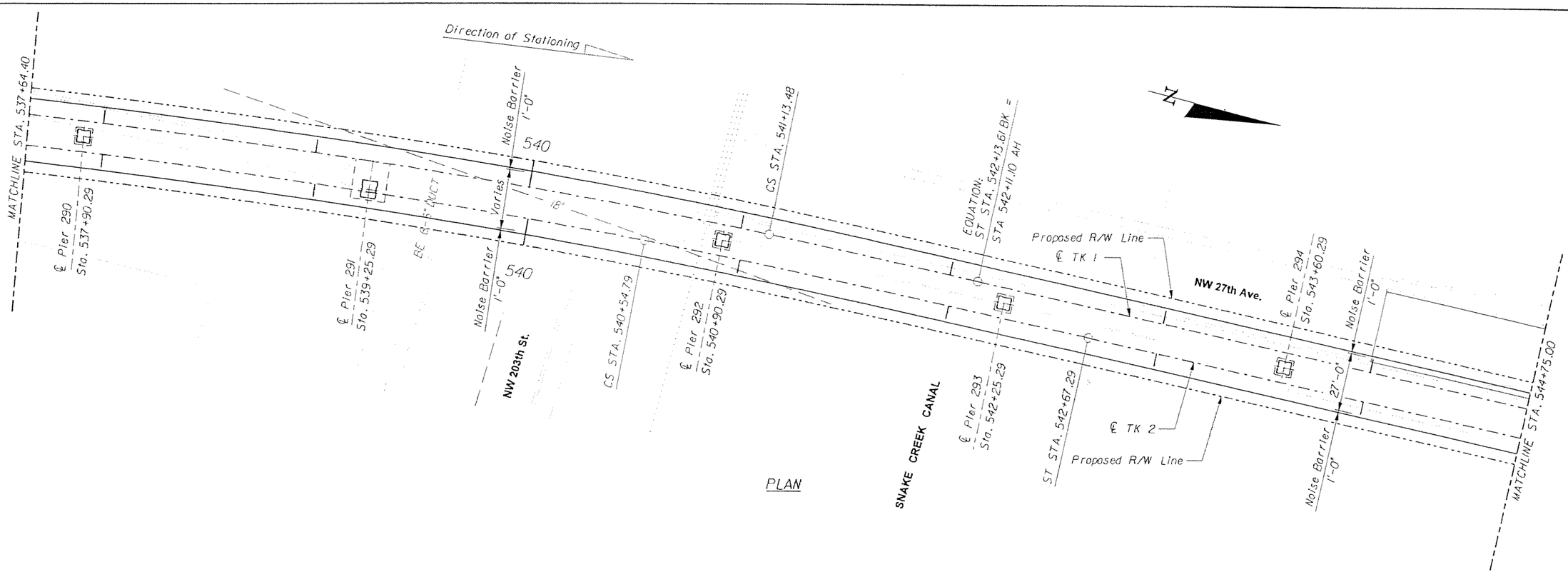

PLAN

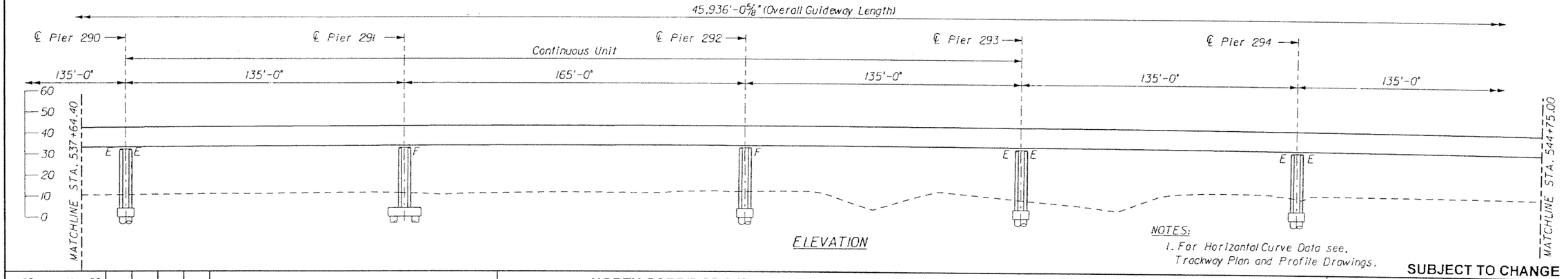

ELEVATION

NOTES:
1. For Horizontal Curve Data see, Trackway Plan and Profile Drawings.

SUBJECT TO CHANGE

GTH Designed by	1-Nov-05 Date					
KDK Drawn by	5-May-06 Date					
JER Checked by	5-May-06 Date					
TWS Approved by	5-May-06 Date	No.	Date	By / Chk	App.	Revisions

NORTH CORRIDOR METRORAIL EXTENSION - PRELIMINARY ENGINEERING (100% SUBMITTAL)

STRUCTURES - GUIDEWAY (CONCRETE)

MIAMI-DADE COUNTY

MIAMI-DADE TRANSIT

PARSONS
7600 CORPORATE CENTER DRIVE, SUITE 500
MIAMI, FLORIDA 33126
PHONE: (786) 464-1000 FAX: (786) 845-7119
CERTIFICATE OF AUTHORIZATION NO. 1838

Approved | Date

Approved | Date

GENERAL PLAN AND ELEVATION 67

Scale 1" = 50' | Drawing SGC- 68 | Sheet 279

5/8/2006 5:28:50 PM g:\646331_north_corridor\cadd\dgn\new alignment\gpe-61.dgn

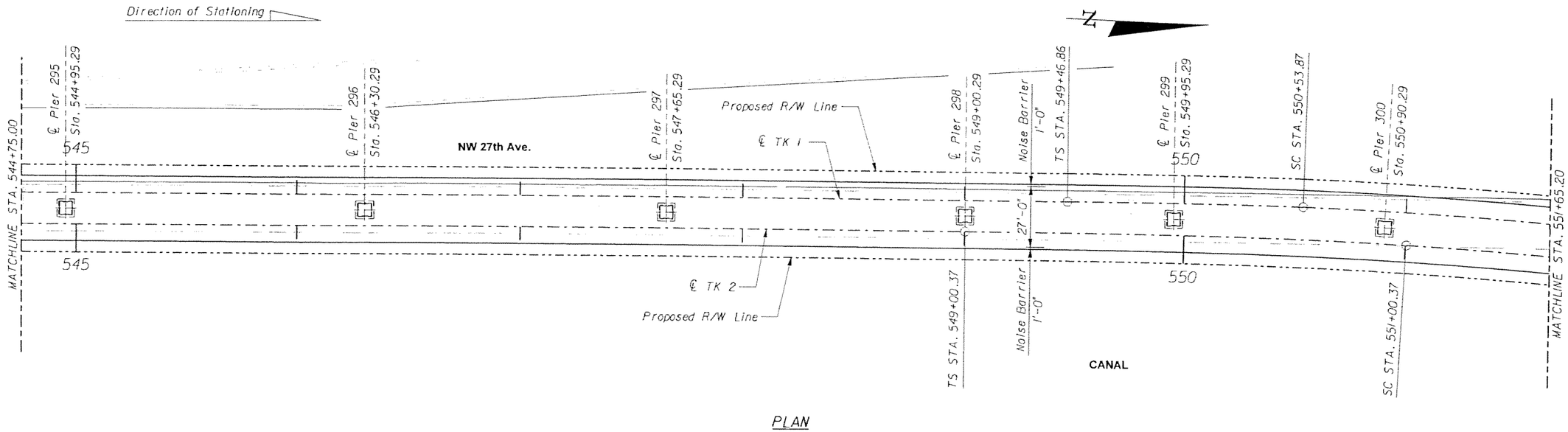

PLAN

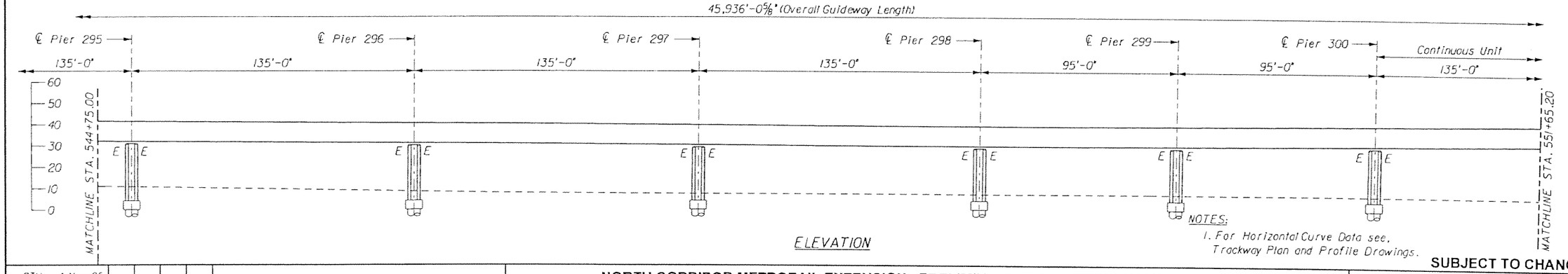

ELEVATION

NOTES:
1. For Horizontal Curve Data see, Trackway Plan and Profile Drawings.

SUBJECT TO CHANGE

GTH Designed by	1-Nov-05 Date					
KDK Drawn by	5-May-06 Date					
JER Checked by	5-May-06 Date					
TWS Approved by	5-May-06 Date	No.	Date	By / Chk	App.	Revisions

NORTH CORRIDOR METRORAIL EXTENSION - PRELIMINARY ENGINEERING (100% SUBMITTAL)

MIAMI-DADE COUNTY

MIAMI-DADE TRANSIT

PARSONS
7500 CORPORATE CENTER DRIVE, SUITE 500
MIAMI, FLORIDA 33126
PHONE: (786) 464-1000 FAX: (786) 845-7119
CERTIFICATE OF AUTHORIZATION NO. 1838

Approved | Date

Approved | Date

STRUCTURES - GUIDEWAY (CONCRETE)

GENERAL PLAN AND ELEVATION 68

Scale 1" = 50' | Drawing SGC- 69 | Sheet 280

5/8/2006 5:28:56 PM g:\646331_north_corridor\caddd\gn\new alignment\gpe-62.dgn

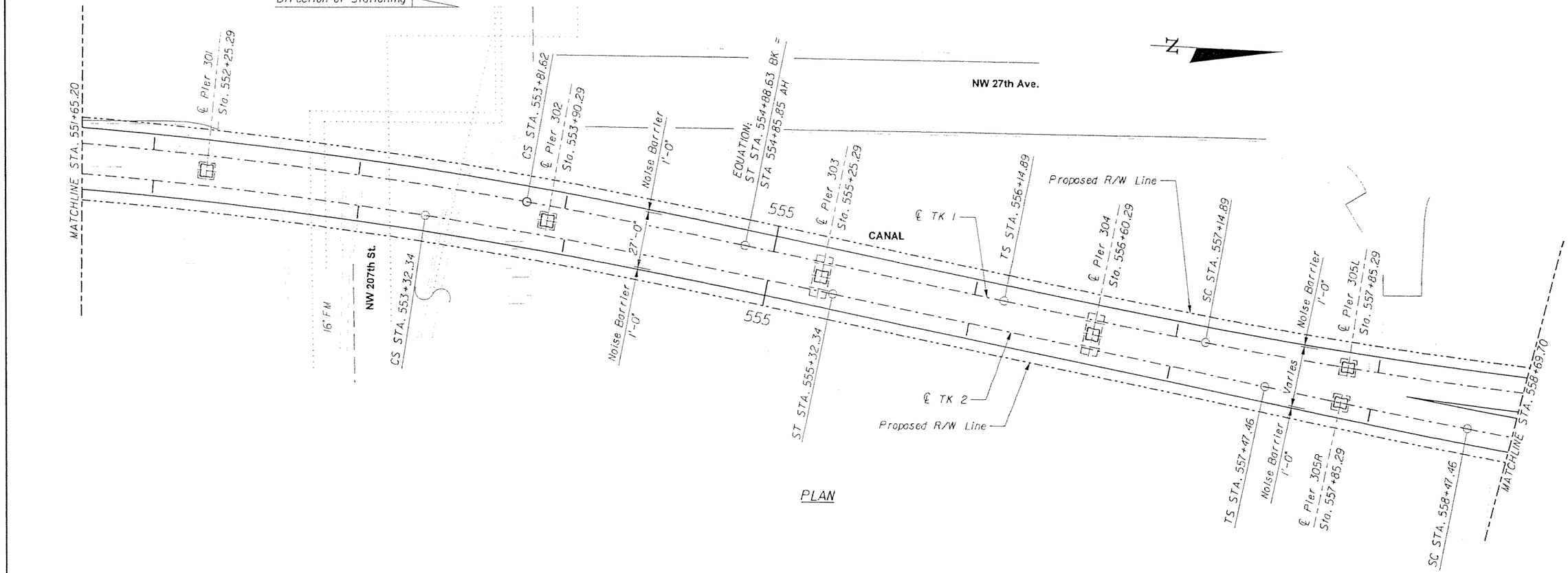

PLAN

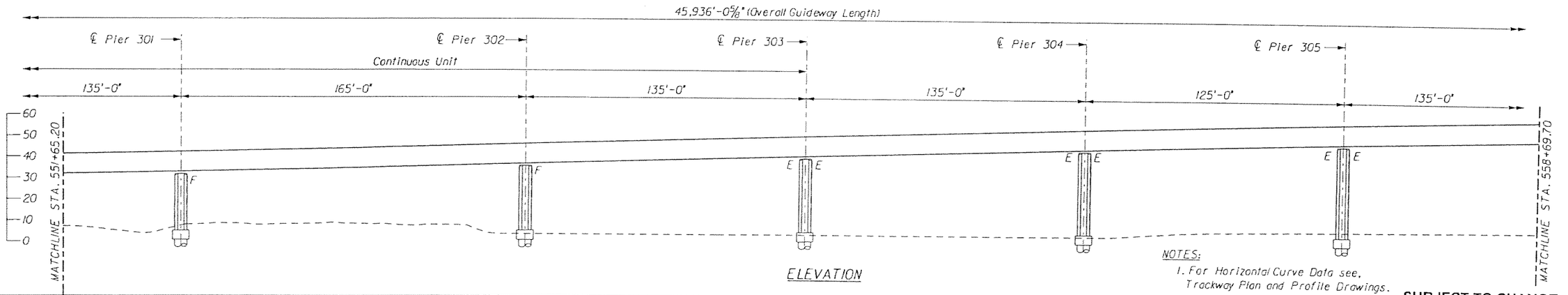

ELEVATION

NOTES:
1. For Horizontal Curve Data see, Trackway Plan and Profile Drawings.

SUBJECT TO CHANGE

GTH Designed by	1-Nov-05 Date					
KDK Drawn by	5-May-06 Date					
JER Checked by	5-May-06 Date					
TWS Approved by	5-May-06 Date	No.	Date	By / Chk	App.	Revisions

NORTH CORRIDOR METRORAIL EXTENSION - PRELIMINARY ENGINEERING (100% SUBMITTAL)

STRUCTURES - GUIDEWAY (CONCRETE)

MIAMI-DADE COUNTY

MIAMI-DADE TRANSIT

PARSONS
7600 CORPORATE CENTER DRIVE, SUITE 500
MIAMI, FLORIDA 33126
PHONE: (786) 464-1000 FAX: (786) 845-7119
CERTIFICATE OF AUTHORIZATION NO. 1838

GENERAL PLAN AND ELEVATION 69

Approved	Date	Approved	Date	Scale	Drawing	Sheet
				1" = 50'	SGC- 70	291

5/8/2006 5:28:59 PM g:\646331_north_corridor\cadd\dgn\new alignment\gpe-63.dgn

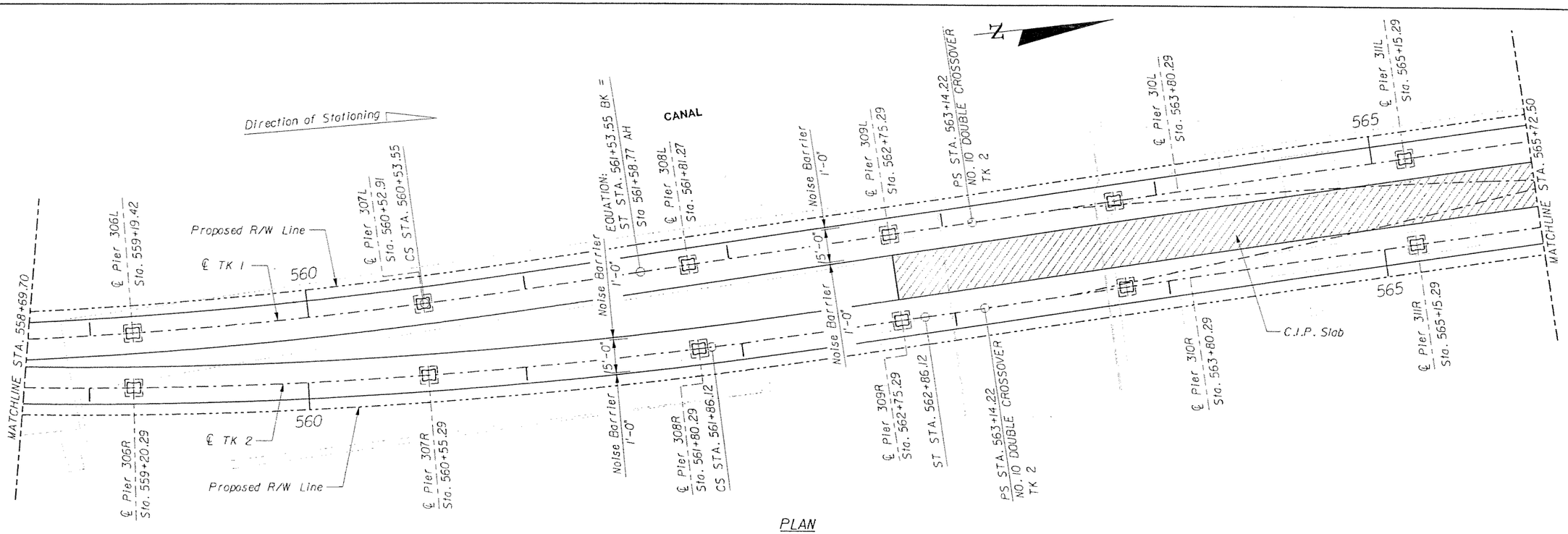

PLAN

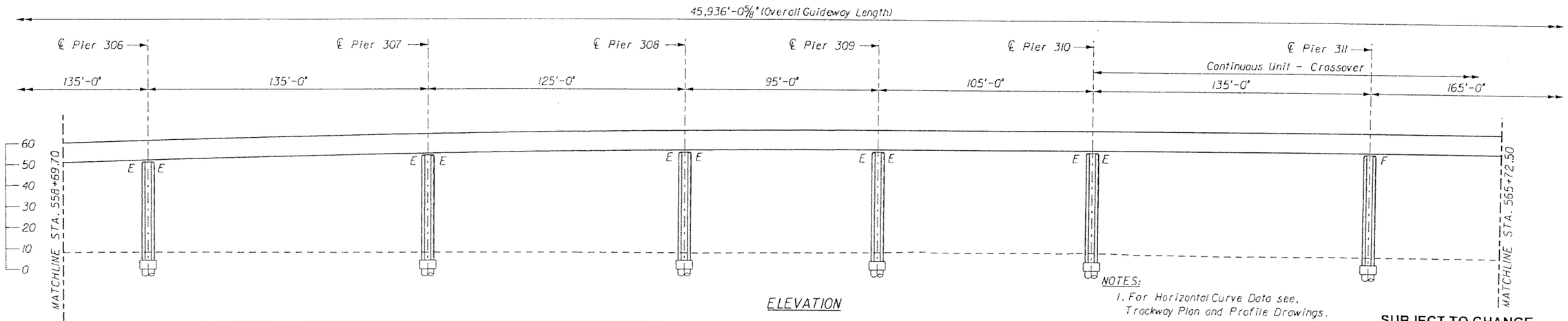

ELEVATION

NOTES:
1. For Horizontal Curve Data see, Trackway Plan and Profile Drawings.

SUBJECT TO CHANGE

GTH Designed by	1-Nov-05 Date					
KDK Drawn by	5-May-06 Date					
JER Checked by	5-May-06 Date					
TWS Approved by	5-May-06 Date	No.	Date	By / Chk	App.	Revisions

NORTH CORRIDOR METRORAIL EXTENSION - PRELIMINARY ENGINEERING (100% SUBMITTAL)

MIAMI-DADE COUNTY

MIAMI-DADE TRANSIT

PARSONS
7600 CORPORATE CENTER DRIVE, SUITE 500
MIAMI, FLORIDA 33126
PHONE: (786) 464-1000 FAX: (786) 845-7119
CERTIFICATE OF AUTHORIZATION NO. 1838

Approved | Date

Approved | Date

STRUCTURES - GUIDEWAY (CONCRETE)

GENERAL PLAN AND ELEVATION 70

Scale 1" = 50' | Drawing SGC- 71 | Sheet 282

5/8/2006 5:29:05 PM g:\648331_north_corridor\caddd\dgn\new alignment\gpe-64.dgn

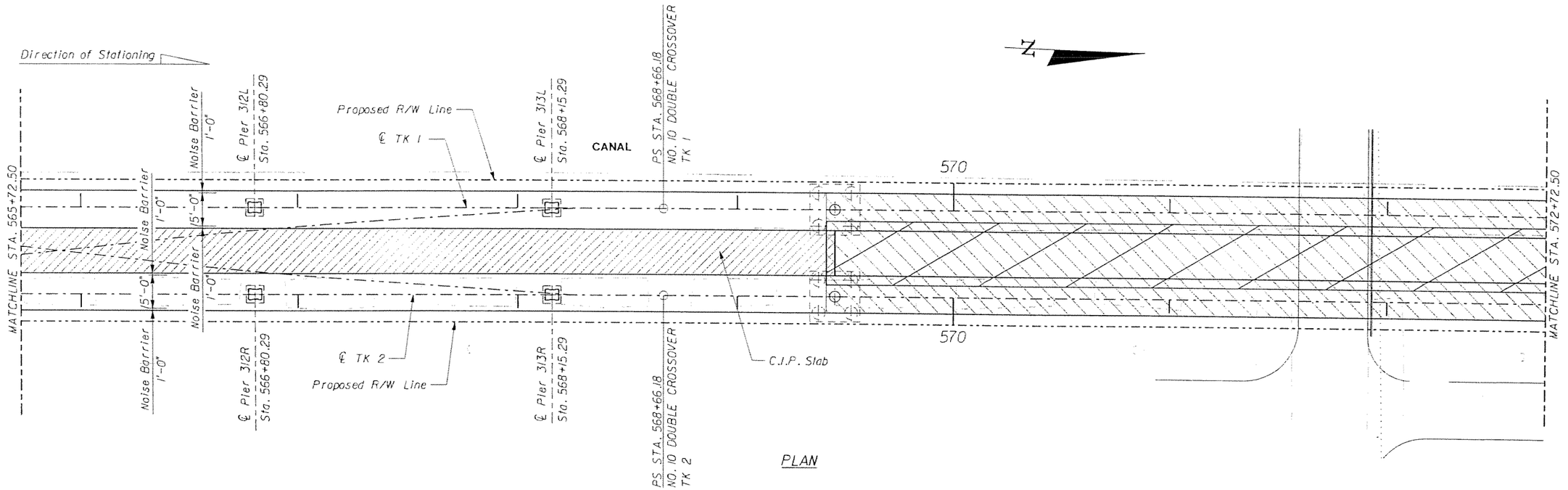

NOTES:
1. For Horizontal Curve Data see, Trackway Plan and Profile Drawings.

SUBJECT TO CHANGE

GTH Designed by	1-Nov-05 Date					
KDK Drawn by	5-May-06 Date					
JER Checked by	5-May-06 Date					
TWS Approved by	5-May-06 Date	No.	Date	By / Chk	App.	Revisions

NORTH CORRIDOR METRORAIL EXTENSION - PRELIMINARY ENGINEERING (100% SUBMITTAL)

MIAMI-DADE COUNTY

MIAMI-DADE TRANSIT

PARSONS
7600 CORPORATE CENTER DRIVE, SUITE 500
MIAMI, FLORIDA 33126
PHONE: (786) 464-1000 FAX: (786) 845-7119
CERTIFICATE OF AUTHORIZATION NO. 1838

Approved / Date

Approved / Date

STRUCTURES - GUIDEWAY (CONCRETE)

GENERAL PLAN AND ELEVATION 71

Scale 1" = 50' | Drawing SGC- 72 | Sheet 283

5/8/2006 5:29:07 PM g:\646331_north_corridor\cadd\dgn\new alignment\gpe-65.dgn

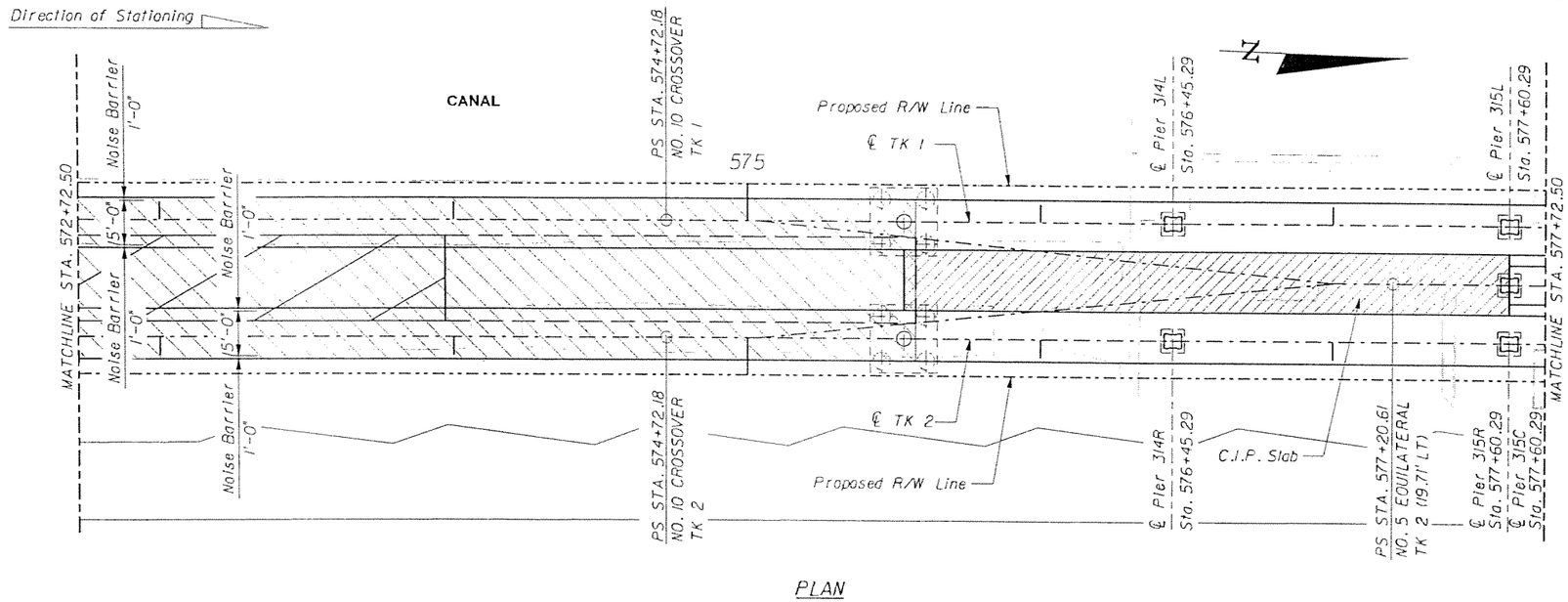

PLAN

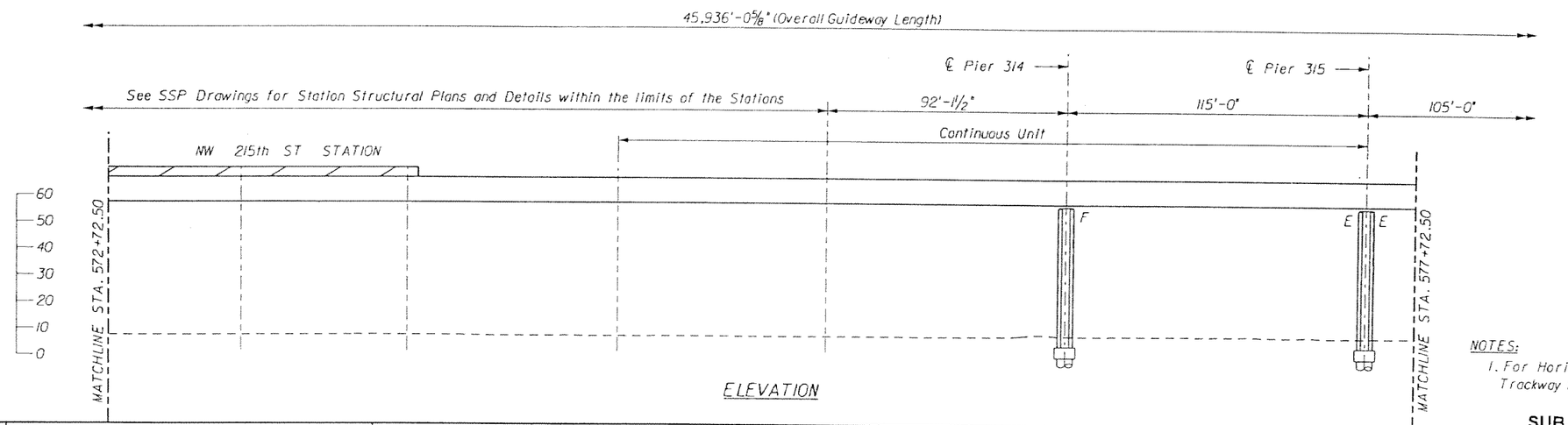

ELEVATION

NOTES:
1. For Horizontal Curve Data see, Trackway Plan and Profile Drawings.

SUBJECT TO CHANGE

GTH Designed by	1-Nov-05 Date				
KDK Drawn by	5-May-06 Date				
JER Checked by	5-May-06 Date				
TWS Approved by	5-May-06 Date	No.	Date	By / Chk	App.	Revisions

NORTH CORRIDOR METRORAIL EXTENSION - PRELIMINARY ENGINEERING (100% SUBMITTAL)

STRUCTURES - GUIDEWAY (CONCRETE)

MIAMI-DADE COUNTY

MIAMI-DADE TRANSIT

PARSONS
7600 CORPORATE CENTER DRIVE, SUITE 500
MIAMI, FLORIDA 33126
PHONE: (786) 464-1000 FAX: (786) 845-7119
CERTIFICATE OF AUTHORIZATION NO. 1836

Approved | Date

Approved | Date

GENERAL PLAN AND ELEVATION 72

Scale 1" = 50' | Drawing SGC- 73 | Sheet 284

5/8/2006 5:29:10 PM g:\646331_north_corridor\cadd\dgn\new alignment\gpe-66.dgn

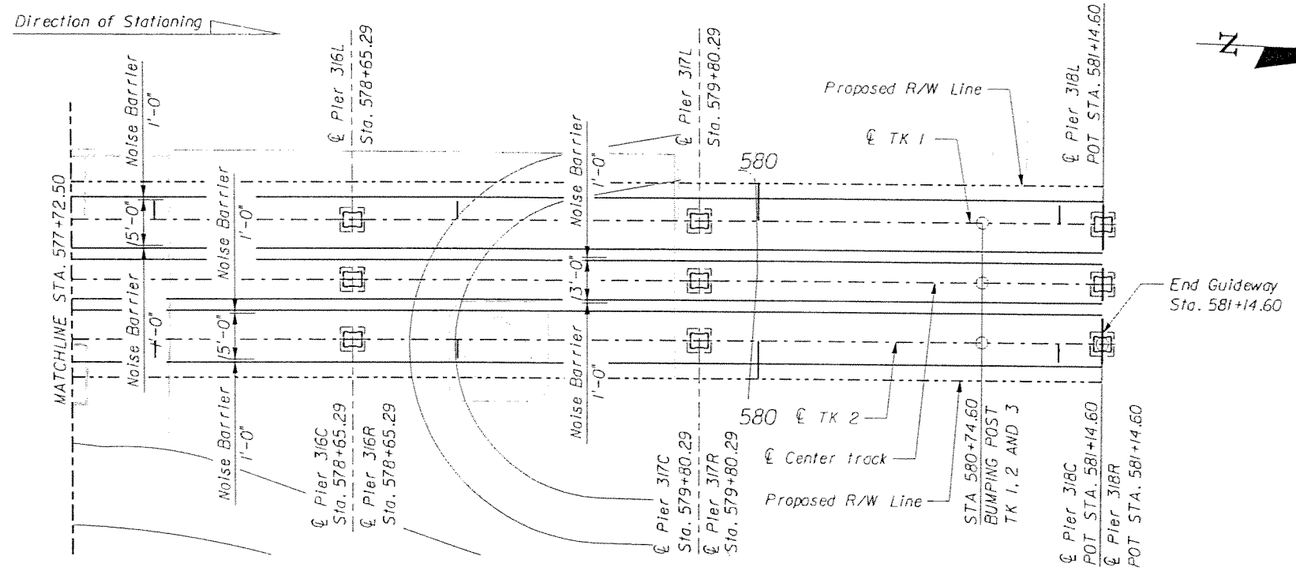

PLAN

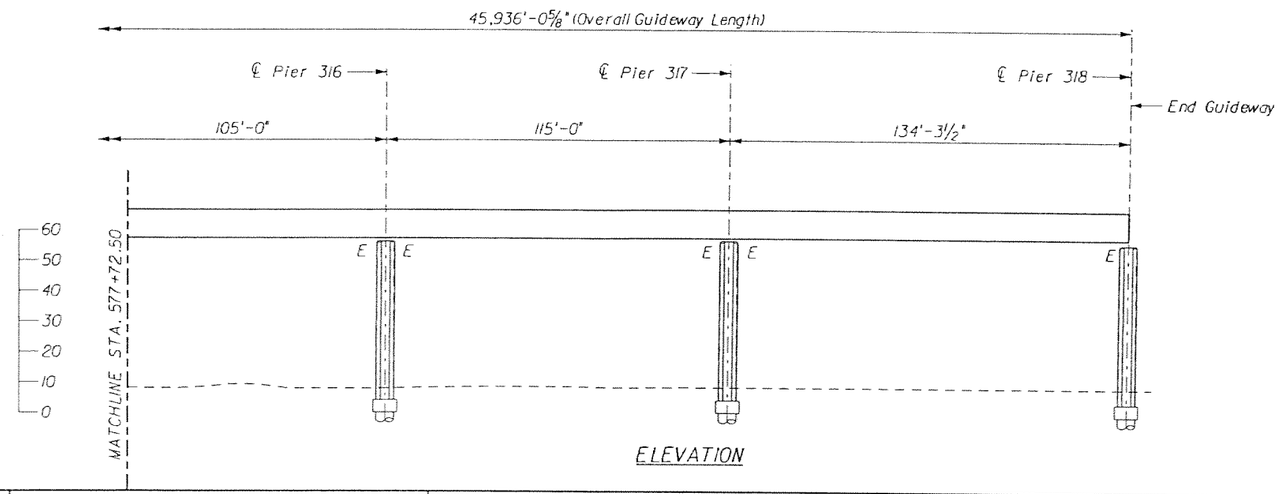

ELEVATION

NOTES:
1. For Horizontal Curve Data see, Trackway Plan and Profile Drawings.

SUBJECT TO CHANGE

GTH Designed by	1-Nov-05 Date					
KDK Drawn by	5-May-06 Date					
JER Checked by	5-May-06 Date					
TWS Approved by	5-May-06 Date	No.	Date	By / Chk	App.	Revisions

NORTH CORRIDOR METRORAIL EXTENSION - PRELIMINARY ENGINEERING (100% SUBMITTAL)

MIAMI-DADE COUNTY — MIAMI-DADE TRANSIT

PARSONS
7600 CORPORATE CENTER DRIVE, SUITE 500
MIAMI, FLORIDA 33126
PHONE: (786) 464-1000 FAX: (786) 845-7119
CERTIFICATE OF AUTHORIZATION NO. 1838

Approved | Date | Approved | Date

STRUCTURES - GUIDEWAY (CONCRETE)

GENERAL PLAN AND ELEVATION 73

Scale 1" = 50' | Drawing SGC- 74 | Sheet 285

5/8/2006 5:29:16 PM g:\646331_north_corridor\cadd\dgn\new alignment\gpe-67.dgn

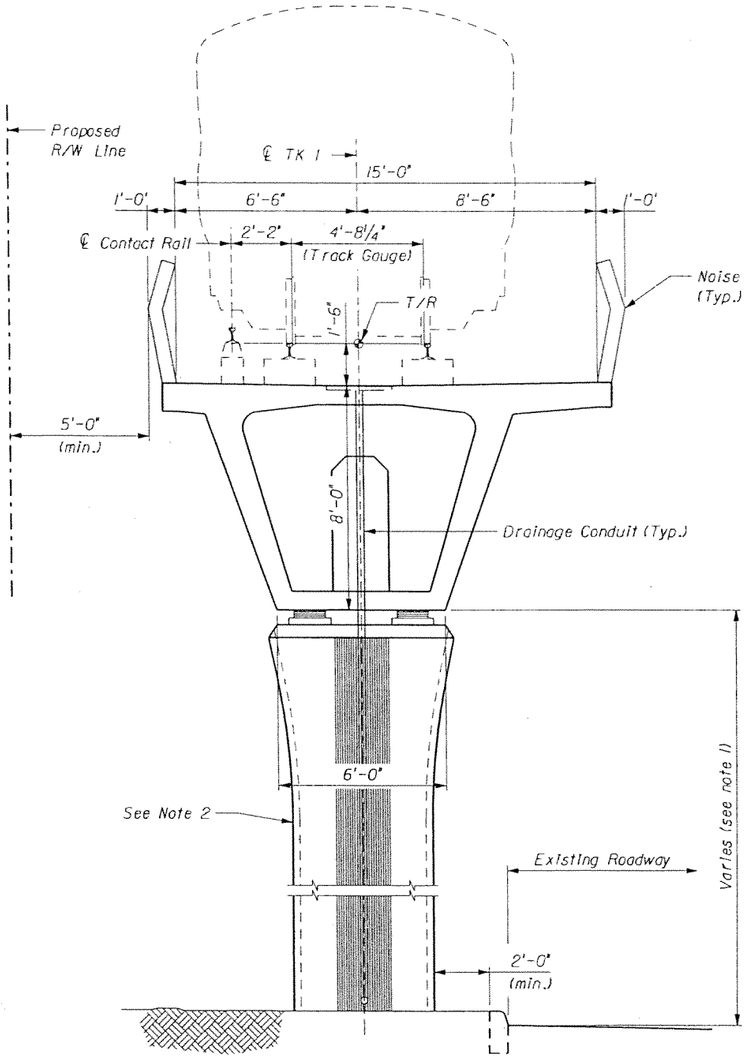

CROSS-SECTION

(TK 1 Sta. 455+19.09 to 121+80.29)

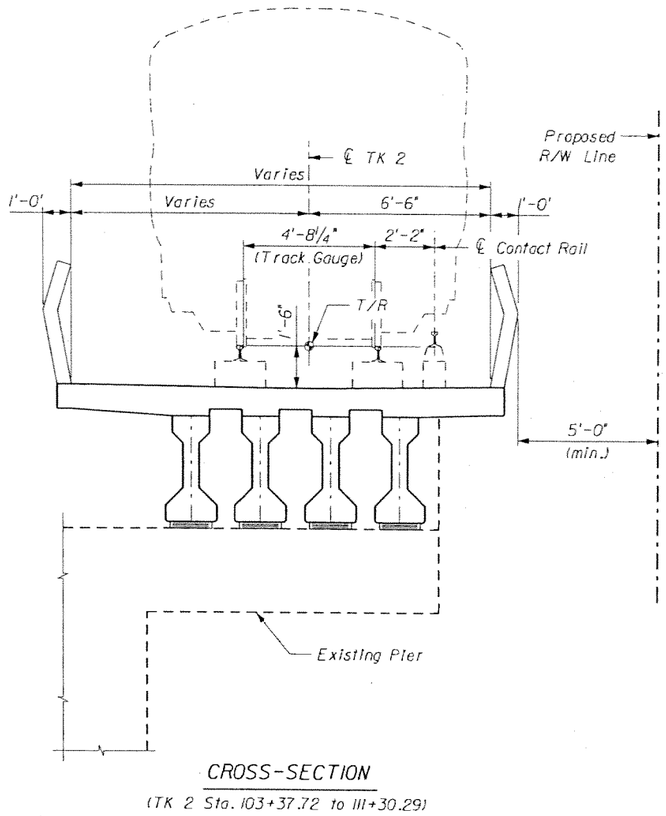

CROSS-SECTION

(TK 2 Sta. 103+37.72 to 111+30.29)

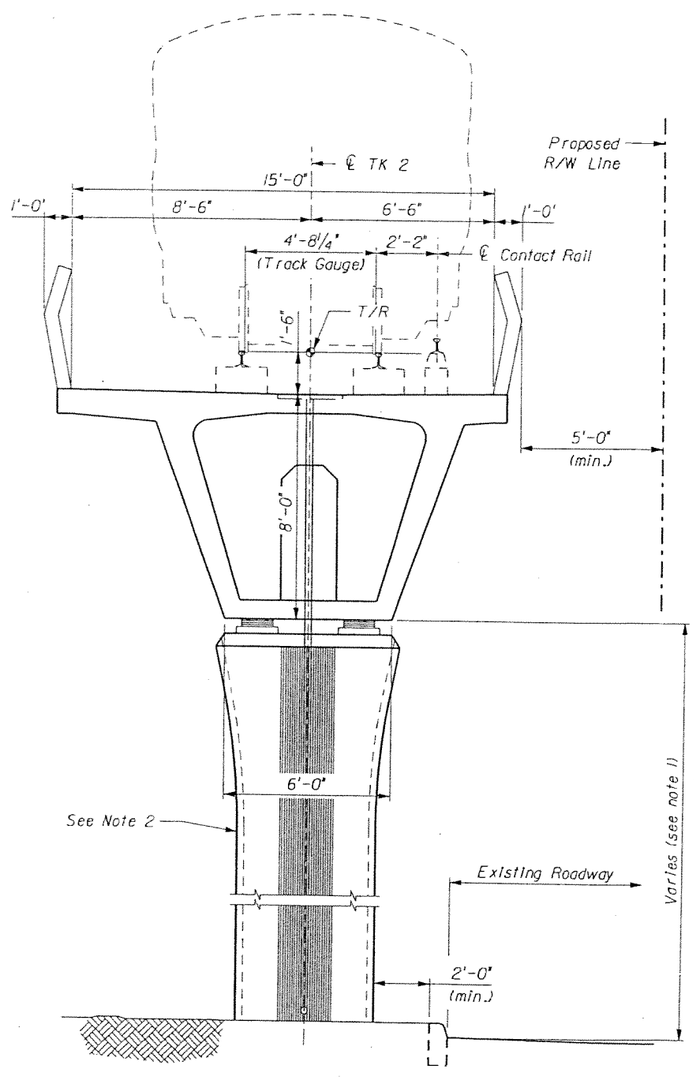

CROSS-SECTION

(TK 2 Sta. 111+30.29 to 121+80.29)

NOTES:

1. Column height varies. Minimum vertical clearance over roadways and shoulders is 16'-6". Minimum vertical clearance over South Florida Rail Corridor owned railroad crossings is 24'-3" and at all other railroad crossings is 23'-6".
2. Substructure type varies. Type 2 pier shown. Refer to sheet titles for various substructure types.

SUBJECT TO CHANGE

GTH	1-Nov-05					
Designed by	Date					
CWN	5-May-06					
Drawn by	Date					
JER	5-May-06					
Checked by	Date					
TWS	5-May-06					
Approved by	Date	No.	Date	By / Chk.	App.	Revisions

NORTH CORRIDOR METRORAIL EXTENSION - PRELIMINARY ENGINEERING (100% SUBMITTAL)

MIAMI-DADE COUNTY

MIAMI-DADE TRANSIT

PARSONS
7600 CORPORATE CENTER DRIVE, SUITE 500
MIAMI, FLORIDA 33126
PHONE: (786) 464-1000 FAX: (786) 845-7119
CERTIFICATE OF AUTHORIZATION NO. 1838

Approved | Date

Approved | Date

STRUCTURES - GUIDEWAY (CONCRETE)

TYPICAL CROSS-SECTIONS
FLYOVER CROSSING

Scale NTS | Drawing SGC- 75 | Sheet 296

5/9/2006 10:34:42 AM g:\646331_north_corridor\cadd\dgn\new alignment\tc cross-section.dgn

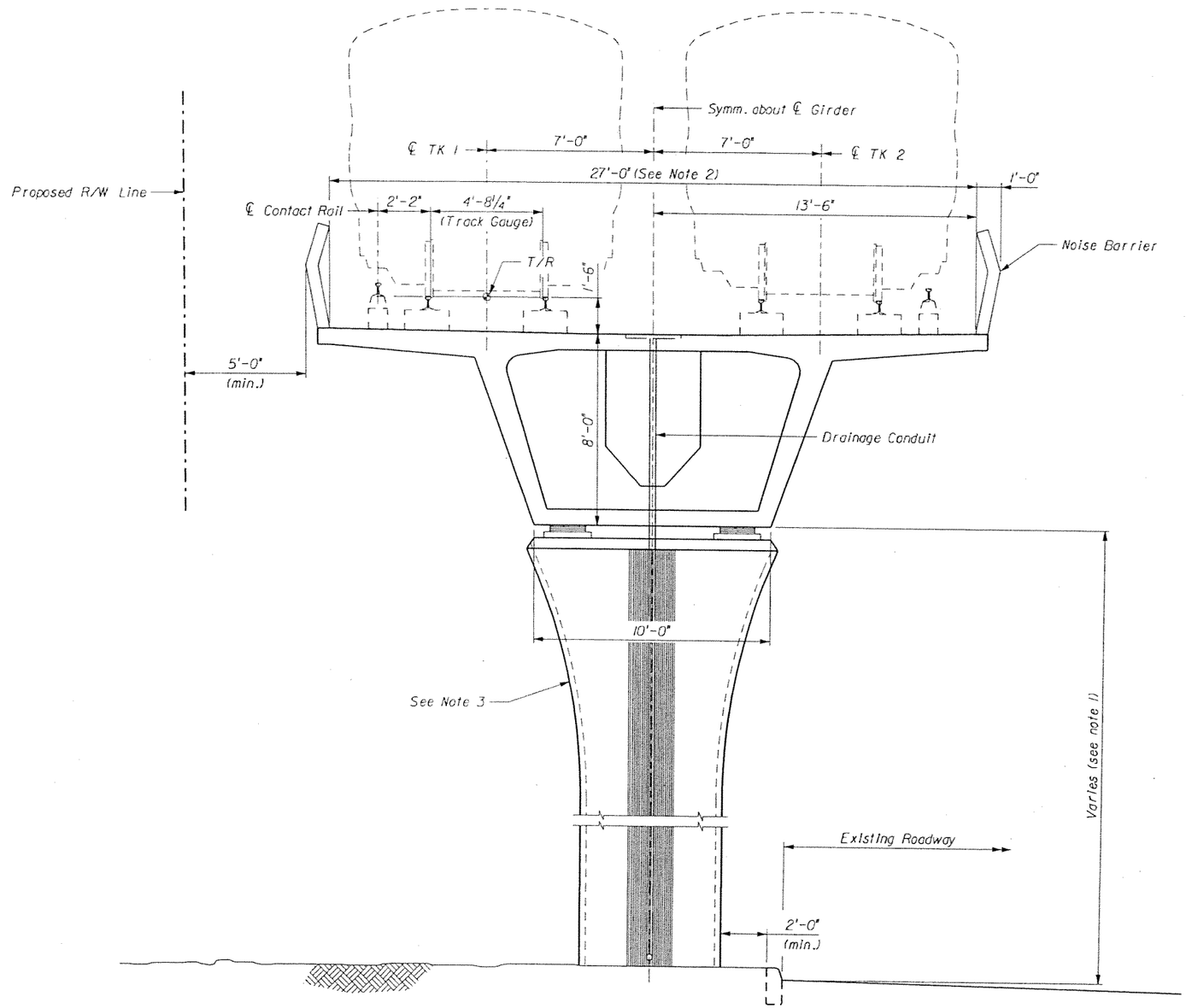

CROSS-SECTION

(Sta. 121+80 to 185+70, Sta. 215+35 to 238+95, Sta. 260+45 to 310+65, Sta. 350+50 to 385+45, Sta. 412+80 to 448+95, Sta. 478+05 to 500+60, and Sta. 533+85 to 555+25)

NOTES:

1. Column height varies. Minimum vertical clearance over roadways and shoulders is 16'-6". Minimum vertical clearance over South Florida Rail Corridor owned railroad crossings is 24'-3" and at all other railroad crossings is 23'-6".
2. Width of box section as shown is based upon distance between centerline of tracks (14'-0") in tangent sections. This width is subject to increase based upon the maximum distance between centerline of tracks in curved sections.
3. Substructure type varies. Type I pier shown. Refer to sheet titles for various substructure types.

GTH	1-Nov-05					
Designed by	Date					
CWN	5-May-06					
Drawn by	Date					
JER	5-May-06					
Checked by	Date					
TWS	5-May-06					
Approved by	Date	No.	Date	By / Chk.	App.	Revisions

NORTH CORRIDOR METRORAIL EXTENSION - PRELIMINARY ENGINEERING (100% SUBMITTAL)

SUBJECT TO CHANGE

STRUCTURES - GUIDEWAY (CONCRETE)

MIAMI-DADE COUNTY

MIAMI-DADE TRANSIT

PARSONS
7600 CORPORATE CENTER DRIVE, SUITE 500
MIAMI, FLORIDA 33126
PHONE: (786) 464-1000 FAX: (786) 845-7119
CERTIFICATE OF AUTHORIZATION NO. 1838

TYPICAL CROSS-SECTION DUAL TRACK GUIDEWAY

Approved	Date	Approved	Date	Scale	Drawing	Sheet
				NTS	SGC- 76	287

5/9/2006 10:34:43 AM g:\646331_north_corridor\cadd\dgn\new alignment\cross-section 1.dgn

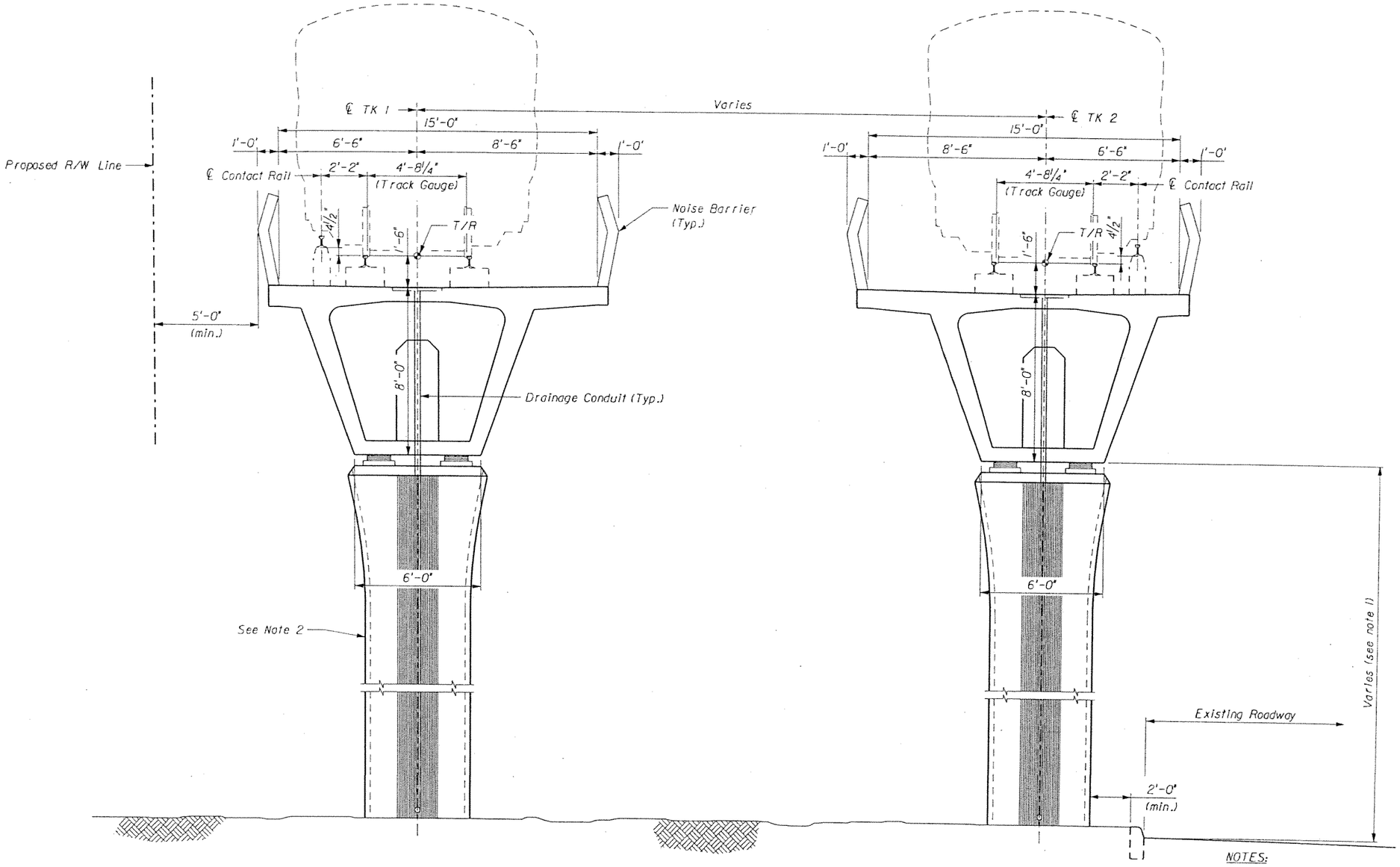

CROSS-SECTION

(Sta. 185+70 to 215+35, Sta. 238+95 to 260+45, Sta. 310+65 to 320+55, Sta. 335+75 to 350+50, Sta. 385+45 to 412+80, Sta. 448+95 to 478+05, Sta. 500+60 to 533+85, Sta. 555+25 to 562+75 and Sta. 569+45 to 575+53)

NOTES:

1. Column height varies. Minimum vertical clearance over roadways and shoulders is 16'-6". Minimum vertical clearance over South Florida Rail Corridor owned railroad crossings is 24'-3" and at all other railroad crossings is 23'-6".
2. Substructure type varies. Type 2 pier shown. Refer to sheet titles for various substructure types.

GTH 1-Nov-05 Designed by Date						
CWN 5-May-06 Drawn by Date						
JER 5-May-06 Checked by Date						
TWS 5-May-06 Approved by Date	No.	Date	By / Chk.	App.	Revisions	

NORTH CORRIDOR METRORAIL EXTENSION - PRELIMINARY ENGINEERING (100% SUBMITTAL)

SUBJECT TO CHANGE

STRUCTURES - GUIDEWAY (CONCRETE)

MIAMI-DADE COUNTY

MIAMI-DADE TRANSIT

PARSONS
7500 CORPORATE CENTER DRIVE, SUITE 500
MIAMI, FLORIDA 33126
PHONE: (786) 464-1000 FAX: (786) 845-7119
CERTIFICATE OF AUTHORIZATION NO. 1838

Approved Date

Approved Date

TYPICAL CROSS-SECTION
SINGLE TRACK GUIDEWAY

Scale NTS Drawing SGC- 77 Sheet 288

5/9/2006 10:34:44 AM g:\646331_north_corridor\cadd\dgn\new alignment\cross-section_2.dgn

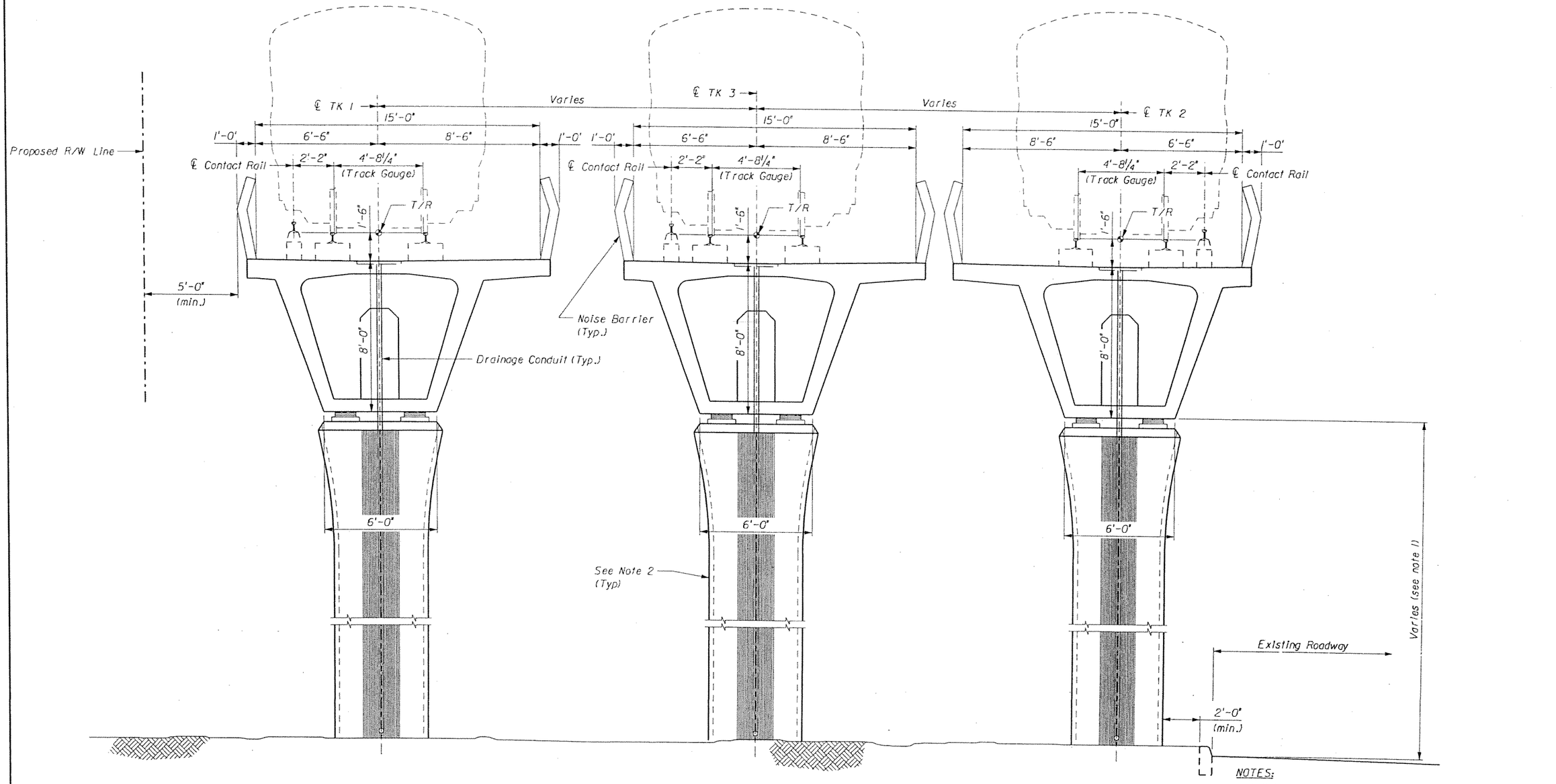

CROSS-SECTION

(Sta. 325+55 to 330+85)

NOTES:

1. Column height varies. Minimum vertical clearance over roadways and shoulders is 16'-6". Minimum vertical clearance over South Florida Rail Corridor owned railroad crossings is 24'-3" and at all other railroad crossings is 23'-6".
2. Substructure type varies. Type 2 pier shown. Refer to sheet titles for various substructure types.

SUBJECT TO CHANGE

GTH	1-Nov-05					
Designed by	Date					
DEP	5-May-06					
Drawn by	Date					
JER	5-May-06					
Checked by	Date					
TWS	5-May-06					
Approved by	Date	No.	Date	By / Chk	App.	Revisions

NORTH CORRIDOR METRORAIL EXTENSION - PRELIMINARY ENGINEERING (100% SUBMITTAL)

STRUCTURES - GUIDEWAY (CONCRETE)

MIAMI-DADE COUNTY

MIAMI-DADE TRANSIT

PARSONS
7600 CORPORATE CENTER DRIVE, SUITE 500
MIAMI, FLORIDA 33126
PHONE: (786) 464-1000 FAX: (786) 845-7119
CERTIFICATE OF AUTHORIZATION NO. 1836

TYPICAL CROSS-SECTION
POCKET TRACK GUIDEWAY

Approved	Date	Approved	Date	Scale	Drawing	Sheet
				NTS	SGC- 78	289

5/9/2006 10:34:44 AM p:\646331_north_corridor\caddd\dgn\new alignment\cross-section_5.dgn

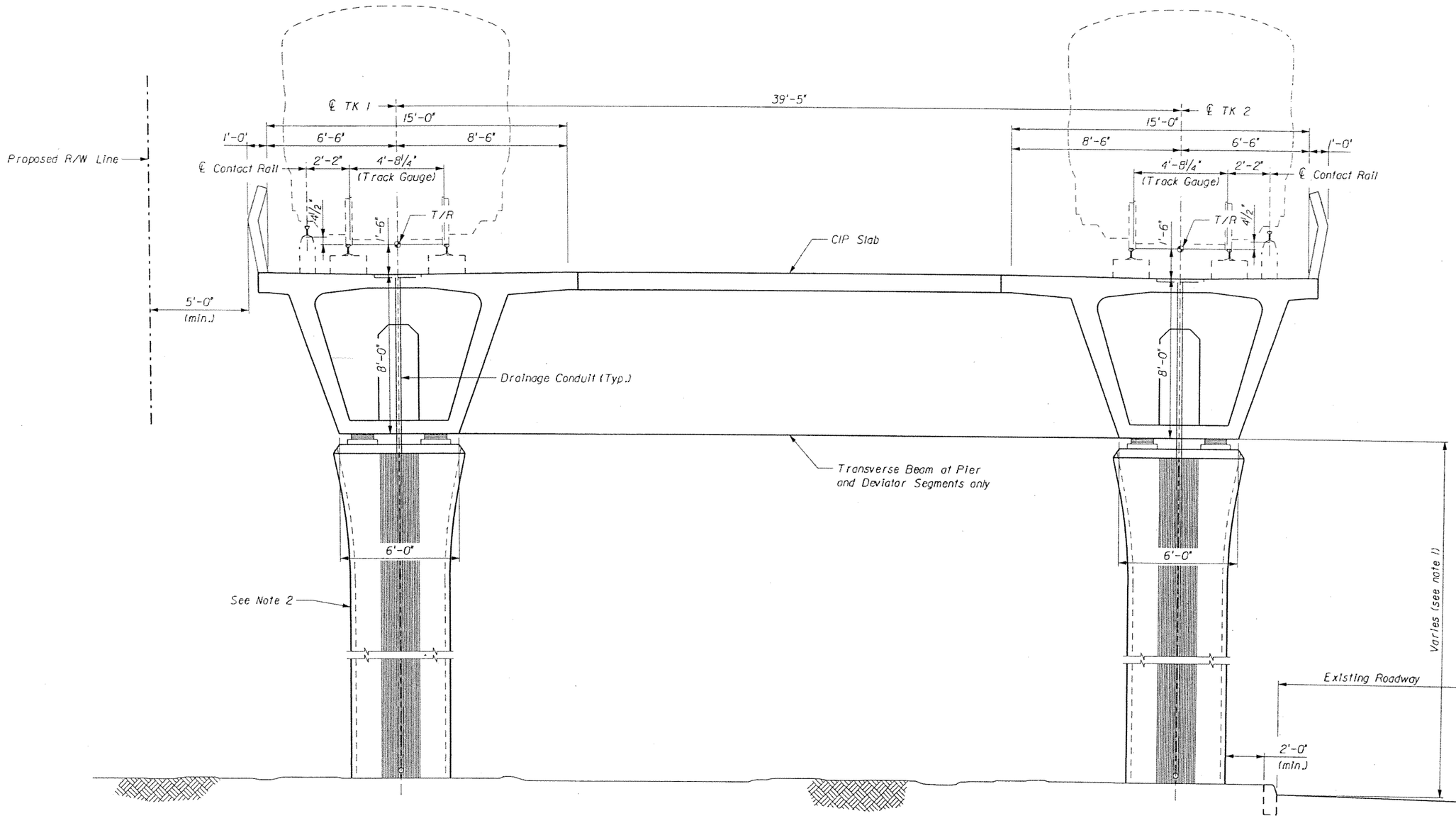

CROSS-SECTION

(Sta. 320+55 to 325+55, Sta. 330+85 to 335+75,
Sta. 562+75 to 569+45, and Sta. 575+53 to 577+60)

NOTES:

1. Column height varies. Minimum vertical clearance over roadways and shoulders is 16'-6". Minimum vertical clearance over South Florida Rail Corridor owned railroad crossings is 24'-3" and at all other railroad crossings is 23'-6".
2. Substructure type varies. Type 2 pier shown. Refer to sheet titles for various substructure types.

SUBJECT TO CHANGE

GTH	1-Nov-05					
Designed by	Date					
DEP	5-May-06					
Drawn by	Date					
JER	5-May-06					
Checked by	Date					
TWS	5-May-06					
Approved by	Date	No.	Date	By / Chk.	App.	Revisions

NORTH CORRIDOR METRORAIL EXTENSION - PRELIMINARY ENGINEERING (100% SUBMITTAL)

STRUCTURES - GUIDEWAY (CONCRETE)

MIAMI-DADE COUNTY

MIAMI-DADE TRANSIT

PARSONS
7600 CORPORATE CENTER DRIVE, SUITE 500
MIAMI, FLORIDA 33126
PHONE: (786) 464-1000 FAX: (786) 845-7119
CERTIFICATE OF AUTHORIZATION NO. 1838

Approved | Date

Approved | Date

TYPICAL CROSS-SECTION
CROSSOVER TRACK GUIDEWAY

Scale NTS | Drawing SGC- 79 | Sheet 290

5/9/2006 10:34:45 AM g:\640331_north_corridor\cadd\dgn\new alignment\cross-section_4.dgn

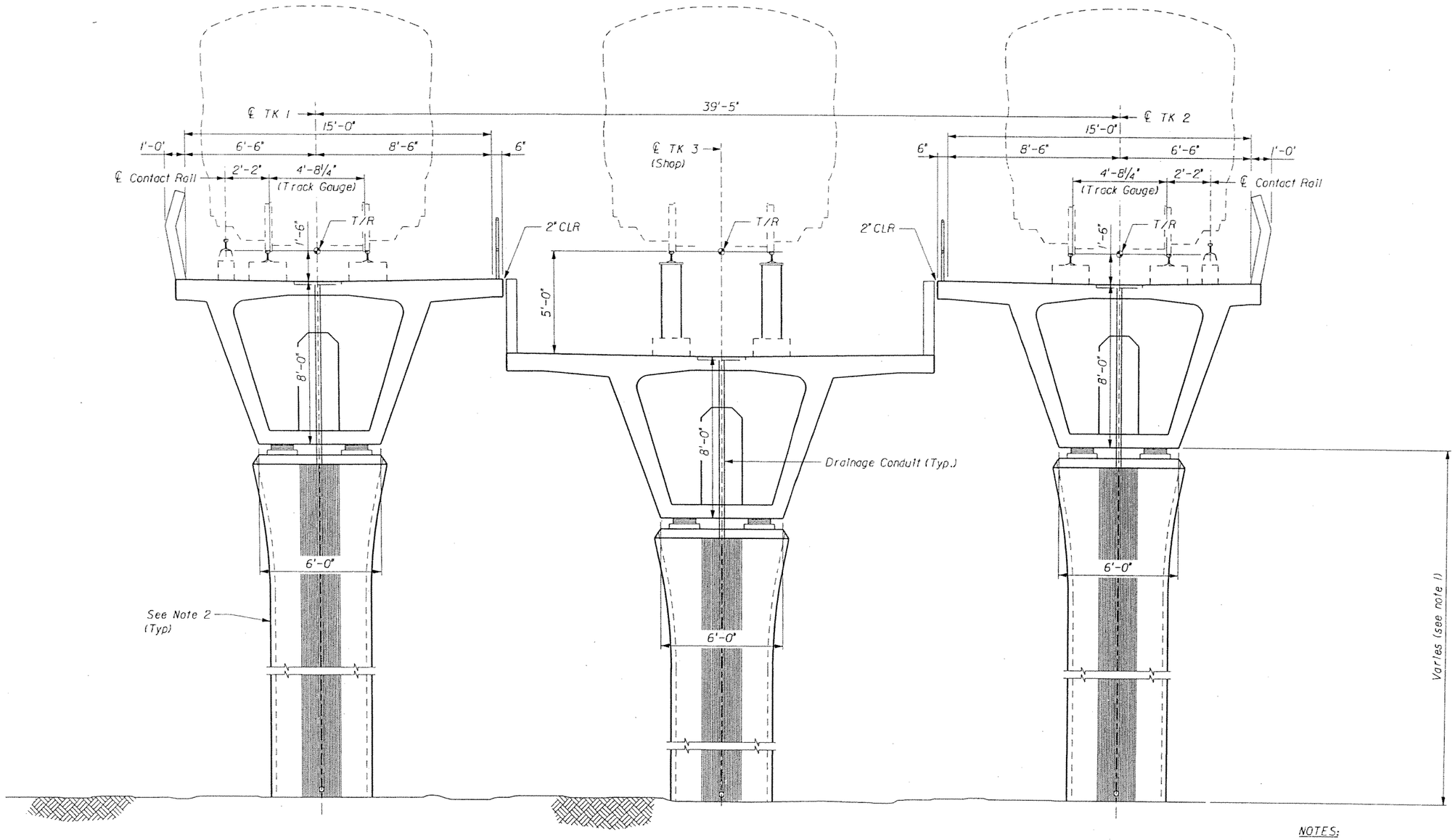

CROSS-SECTION

(Sta. 577+60 to 581+14)

NOTES:

1. Column height varies. Minimum vertical clearance over roadways and shoulders is 16'-6". Minimum vertical clearance over South Florida Rail Corridor owned railroad crossings is 24'-3" and at all other railroad crossings is 23'-6".
2. Substructure type varies. Type 2 pier shown. Refer to sheet titles for various substructure types.

SUBJECT TO CHANGE

GTH	1-Nov-05					
Designed by	Date					
DEP	5-May-06					
Drawn by	Date					
JER	5-May-06					
Checked by	Date					
TWS	5-May-06					
Approved by	Date	No.	Date	By / Chk	App.	Revisions

NORTH CORRIDOR METRORAIL EXTENSION - PRELIMINARY ENGINEERING (100% SUBMITTAL)

STRUCTURES - GUIDEWAY (CONCRETE)

MIAMI-DADE COUNTY

MIAMI-DADE TRANSIT

PARSONS
7600 CORPORATE CENTER DRIVE, SUITE 500
MIAMI, FLORIDA 33126
PHONE: (786) 454-1000 FAX: (786) 845-7119
CERTIFICATE OF AUTHORIZATION NO. 1838

Approved | Date

Approved | Date

TYPICAL CROSS-SECTION
SHOP TRACK GUIDEWAY

Scale NTS | Drawing SGC- 80 | Sheet 291

5/9/2006 10:34:46 AM g:\648331_north_corridor\cadd\dgn\new alignment\cross-section_3.dgn

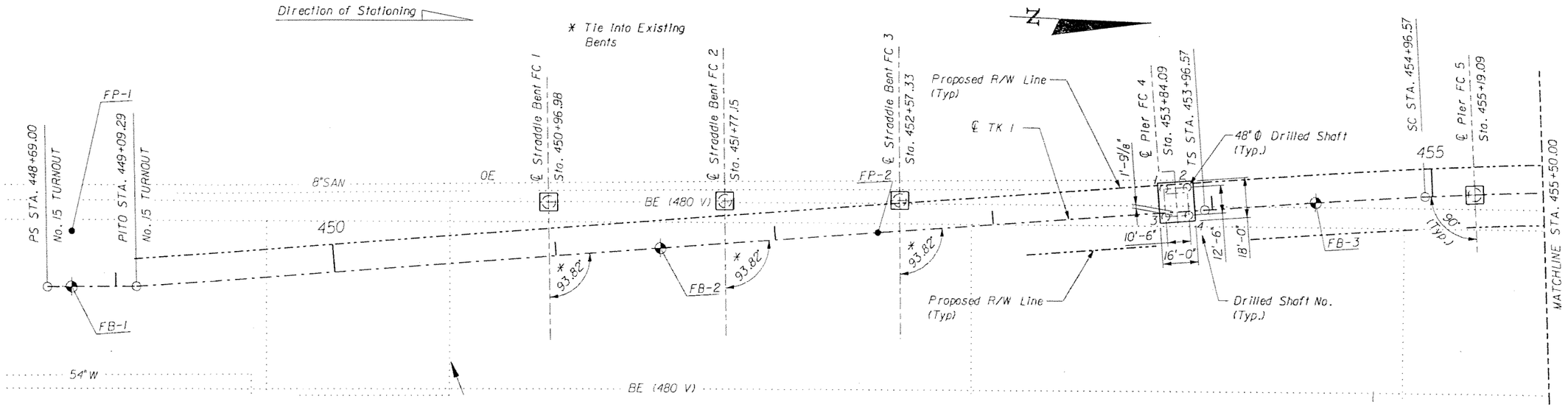

PLAN

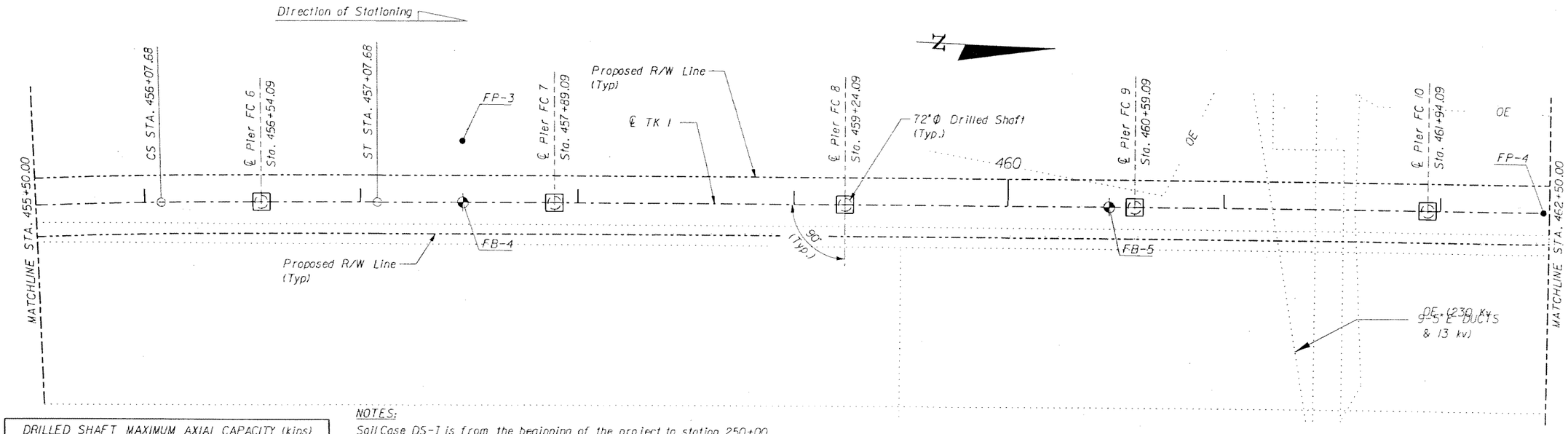

PLAN

DRILLED SHAFT MAXIMUM AXIAL CAPACITY (kips)			
Size	DS-I	DS-II	DS-III
48"Φ	1200	1250	1060
72"Φ	1800	1870	1590

NOTES:

Soil Case DS-I is from the beginning of the project to station 250+00 & station 420+00 to 475+00.

Soil Case DS-II is from station 250+00 to 420+00.

Soil Case DS-III is from station 475+00 to the end of the project.

NOTES:

1. For Horizontal Curve Data see, Trackway Plan and Profile Drawings.

SUBJECT TO CHANGE

GTH Designed by	1-Nov-05 Date					
DEP Drawn by	5-May-06 Date					
JER Checked by	5-May-06 Date					
TWS Approved by	5-May-06 Date	No.	Date	By / Chk.	App.	Revisions

NORTH CORRIDOR METRORAIL EXTENSION - PRELIMINARY ENGINEERING (100% SUBMITTAL)

STRUCTURES - GUIDEWAY (CONCRETE

MIAMI-DADE COUNTY

MIAMI-DADE TRANSIT

PARSONS
7600 CORPORATE CENTER DRIVE, SUITE 500
MIAMI, FLORIDA 33126
PHONE: (786) 464-1000 FAX: (786) 845-7119
CERTIFICATE OF AUTHORIZATION NO. 1838

FOUNDATION LAYOUT 1

Approved	Date	Approved	Date	Scale	Drawing	Sheet
				1"=50'	SGC- 81	292

5/9/2006 4:28:08 PM g:\646331_north_corridor\caddd\gn\new alignment\foundation-01.dgn

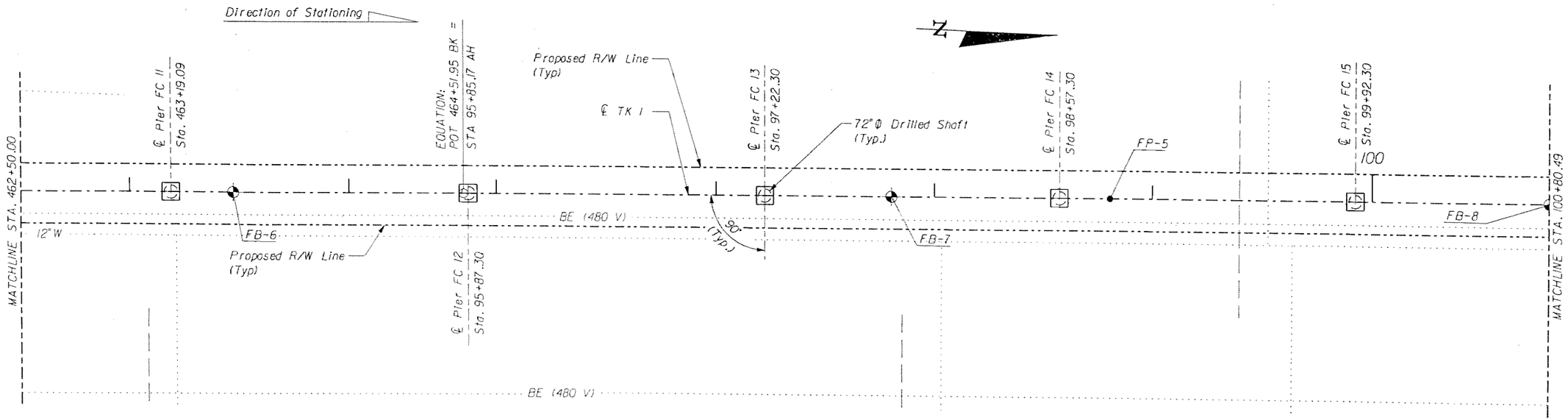

PLAN

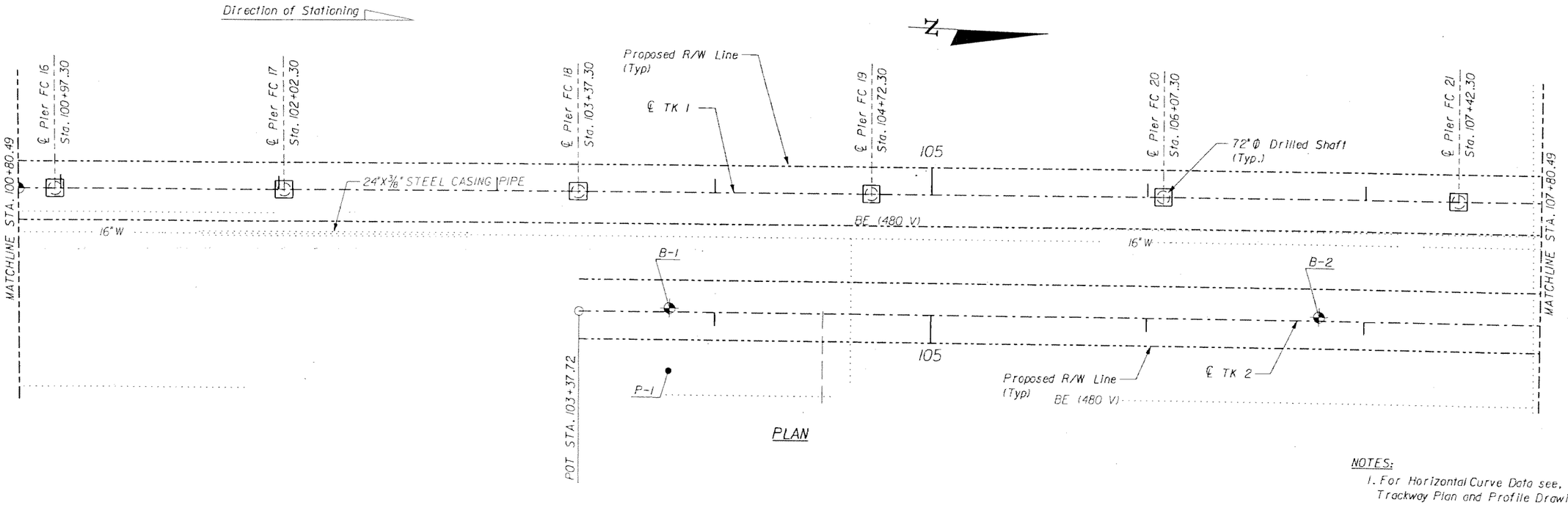

PLAN

NOTES:

1. For Horizontal Curve Data see, Trackway Plan and Profile Drawings.

GTH Designed by	1-Nov-05 Date					
DEP Drawn by	5-May-06 Date					
JER Checked by	5-May-06 Date					
TWS Approved by	5-May-06 Date	No.	Date	By / Chk	App.	Revisions

NORTH CORRIDOR METRORAIL EXTENSION - PRELIMINARY ENGINEERING (100% SUBMITTAL)

SUBJECT TO CHANGE

STRUCTURES - GUIDEWAY (CONCRETE)

MIAMI-DADE COUNTY

MIAMI-DADE TRANSIT

PARSONS
7600 CORPORATE CENTER DRIVE, SUITE 500
MIAMI, FLORIDA 33126
PHONE: (786) 464-1000 FAX: (786) 845-7119
CERTIFICATE OF AUTHORIZATION NO. 1838

FOUNDATION LAYOUT 2

Approved / Date

Approved / Date

Scale 1" = 50'

Drawing SGC- 82

Sheet 293

5/9/2006 4:28:10 PM p:\648331_north_corridor\cadd\dgn\new alignment\foundation-02.dgn

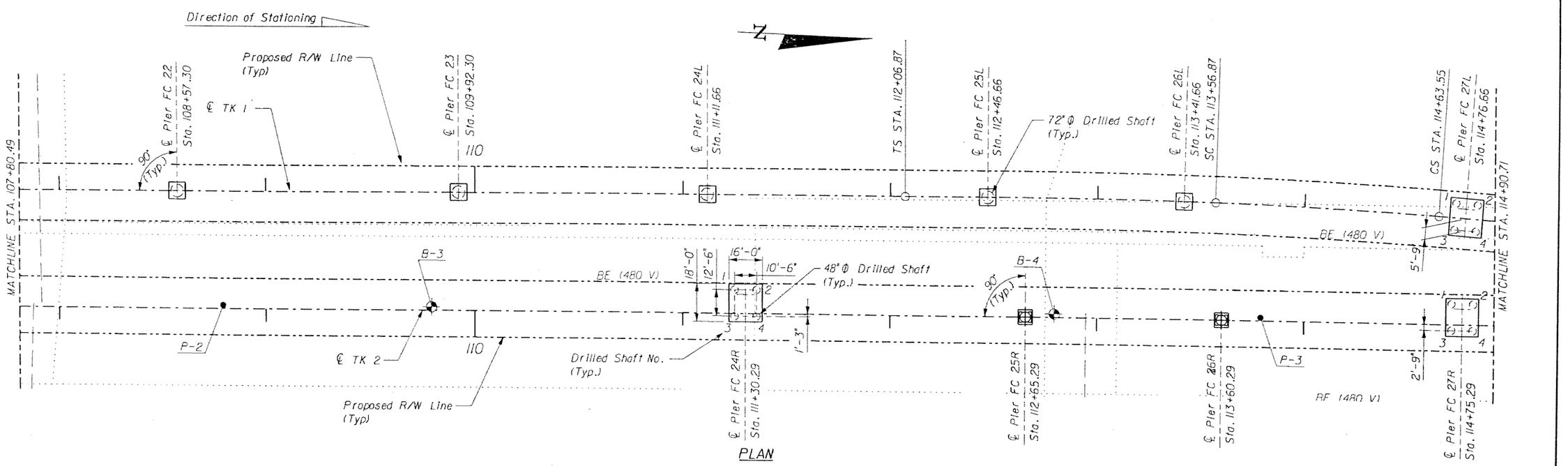

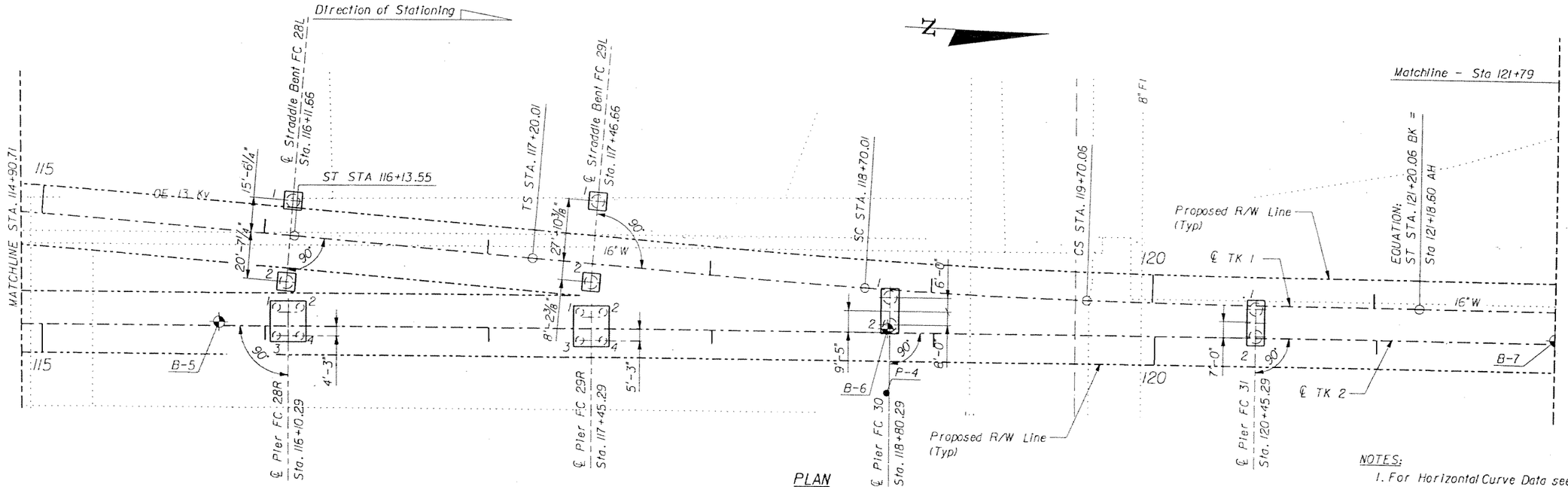

NOTES:
1. For Horizontal Curve Data see, Trackway Plan and Profile Drawings.

SUBJECT TO CHANGE

GTH Designed by	1-Nov-05 Date					
DEP Drawn by	5-May-06 Date					
JER Checked by	5-May-06 Date					
TWS Approved by	5-May-06 Date	No.	Date	By Chk.	App.	Revisions

NORTH CORRIDOR METRORAIL EXTENSION - PRELIMINARY ENGINEERING (100% SUBMITTAL)

STRUCTURES - GUIDEWAY (CONCRETE)

MIAMI-DADE COUNTY

MIAMI-DADE TRANSIT

PARSONS
7600 CORPORATE CENTER DRIVE, SUITE 500
MIAMI, FLORIDA 33126
PHONE: (786) 464-1000 FAX: (786) 845-7119
CERTIFICATE OF AUTHORIZATION NO. 1838

Approved | Date | Approved | Date

FOUNDATION LAYOUT 3

Scale 1" = 50' | Drawing SGC- 83 | Sheet 294

5/9/2006 4:28:12 PM g:\646331_north_corridor\cadd\dgn\new alignment\foundation-03.dgn

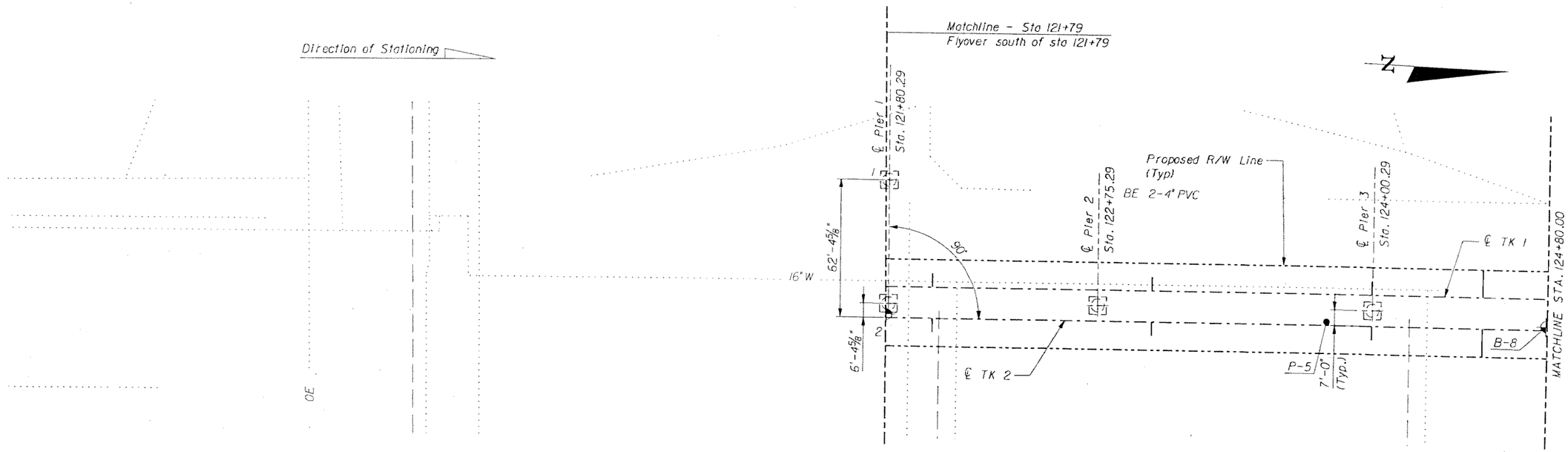

PLAN

NOTES:

1. For Horizontal Curve Data see, Trackway Plan and Profile Drawings.

GTH	1-Nov-05					
Designed by	Date					
JPH	5-May-06					
Drawn by	Date					
JER	5-May-06					
Checked by	Date					
TWS	5-May-06					
Approved by	Date	No.	Date	By / Chk.	App.	Revisions

NORTH CORRIDOR METRORAIL EXTENSION - PRELIMINARY ENGINEERING (100% SUBMITTAL)

SUBJECT TO CHANGE

STRUCTURES - GUIDEWAY (CONCRETE)

MIAMI-DADE COUNTY

MIAMI-DADE TRANSIT

PARSONS
7600 CORPORATE CENTER DRIVE, SUITE 500
MIAMI, FLORIDA 33126
PHONE: (786) 464-1000 FAX: (786) 845-7119
CERTIFICATE OF AUTHORIZATION NO. 1838

FOUNDATION LAYOUT 4

Approved	Date	Approved	Date	Scale	Drawing	Sheet
				1" = 50'	SGC- 84	295

5/9/2006 4:28:17 PM g:\646331_north_corridor\cadd\dgn\new alignment\foundation-04.dgn

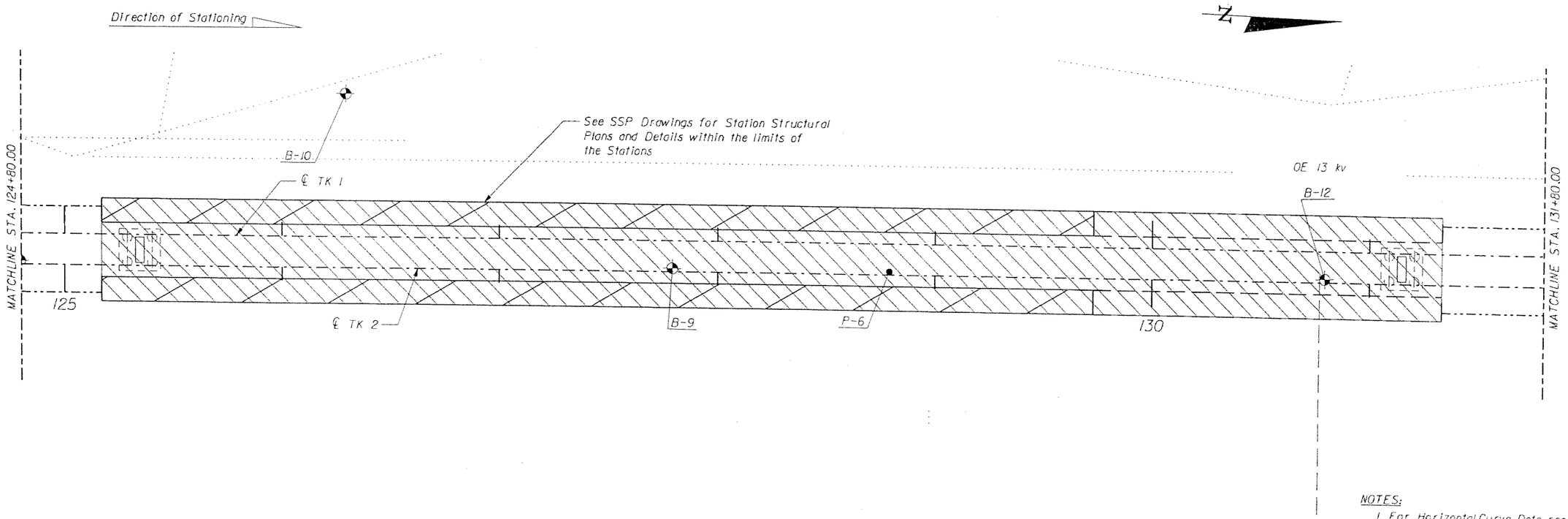

PLAN

NOTES:

1. For Horizontal Curve Data see, Trackway Plan and Profile Drawings.

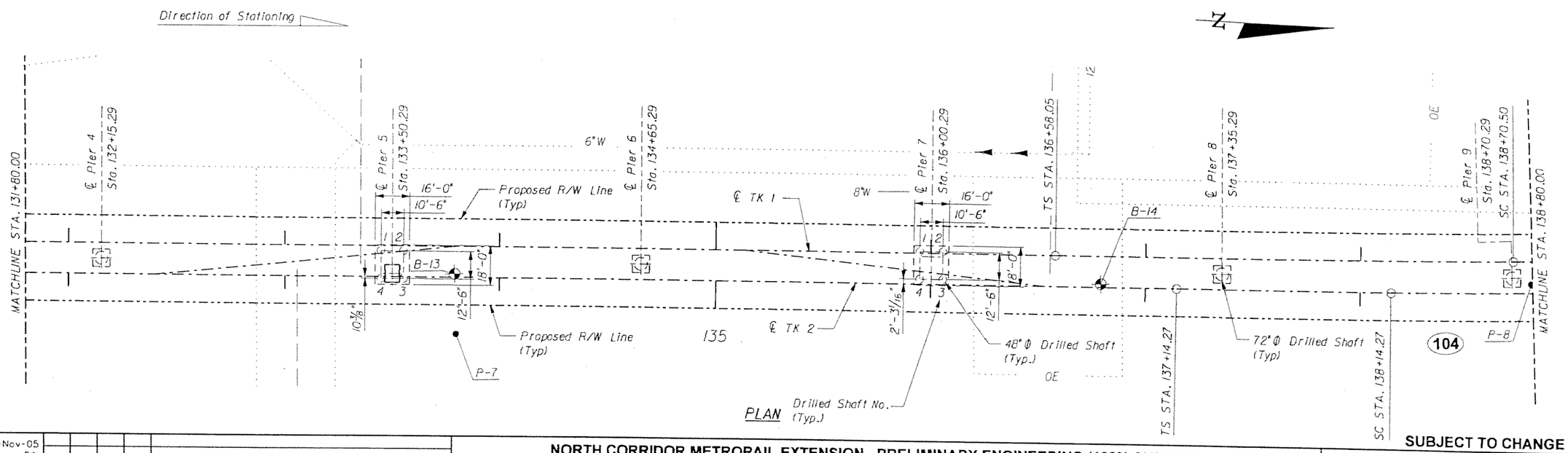

PLAN Drilled Shaft No. (Typ.)

SUBJECT TO CHANGE

GTH Designed by	1-Nov-05 Date					
JPH Drawn by	5-May-06 Date					
JER Checked by	5-May-06 Date					
TWS Approved by	5-May-06 Date	No.	Date	By / Chk	App.	Revisions

NORTH CORRIDOR METRORAIL EXTENSION - PRELIMINARY ENGINEERING (100% SUBMITTAL)

STRUCTURES - GUIDEWAY (CONCRETE)

MIAMI-DADE COUNTY — MIAMI-DADE TRANSIT

PARSONS
7600 CORPORATE CENTER DRIVE, SUITE 500
MIAMI, FLORIDA 33126
PHONE: (786) 464-1000 FAX: (786) 845-7119
CERTIFICATE OF AUTHORIZATION NO. 1838

Approved | Date | Approved | Date

FOUNDATION LAYOUT 5

Scale 1" = 50' | Drawing SGC- 85 | Sheet 296

5/9/2006 4:28:19 PM g:\646331_north_corridor\caddd\gn\new alignment\foundation-05.dgn

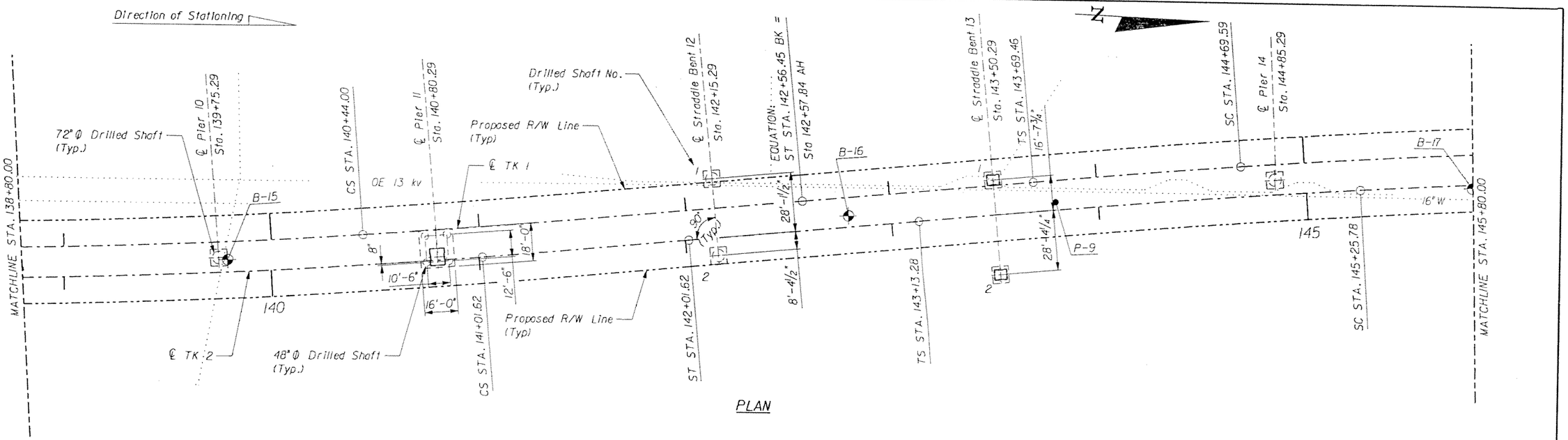

PLAN

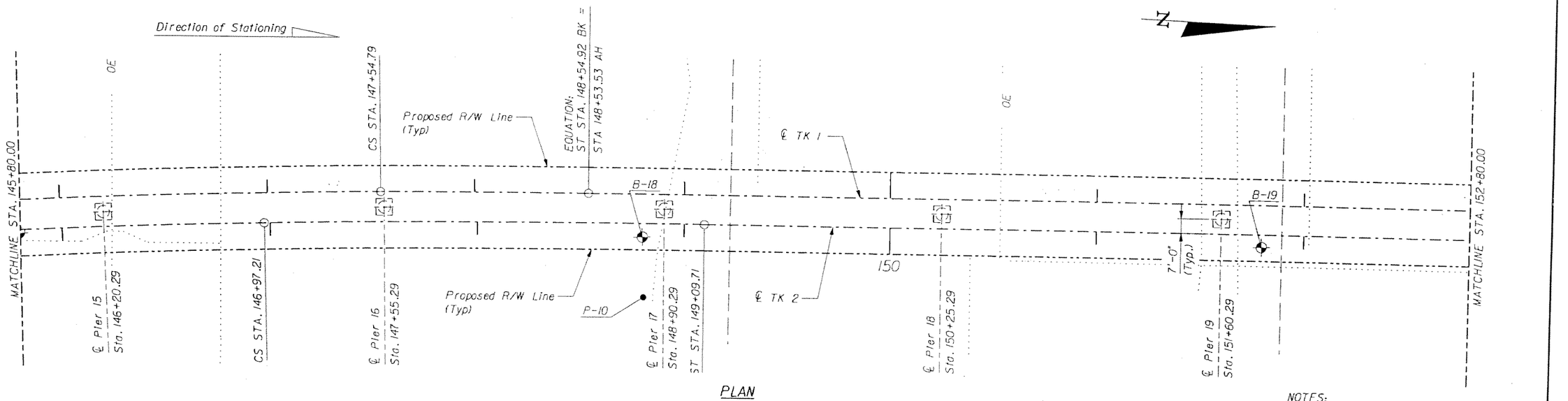

PLAN

NOTES:
1. For Horizontal Curve Data see, Trackway Plan and Profile Drawings.

GTH Designed by	1-Nov-05 Date					
JPH Drawn by	5-May-06 Date					
JER Checked by	5-May-06 Date					
TWS Approved by	5-May-06 Date	No.	Date	By / Chk	App.	Revisions

SUBJECT TO CHANGE

NORTH CORRIDOR METRORAIL EXTENSION - PRELIMINARY ENGINEERING (100% SUBMITTAL)

STRUCTURES - GUIDEWAY (CONCRETE)

MIAMI-DADE COUNTY — MIAMI-DADE TRANSIT

PARSONS
7600 CORPORATE CENTER DRIVE, SUITE 500
MIAMI, FLORIDA 33126
PHONE: (786) 464-1000 FAX: (786) 845-7119
CERTIFICATE OF AUTHORIZATION NO. 1838

FOUNDATION LAYOUT 6

Approved / Date

Approved / Date

Scale 1" = 50' | Drawing SGC- 86 | Sheet 297

5/9/2006 4:28:21 PM g:\846331_north_corridor\caddd\gn\new alignment\foundation-06.dgn

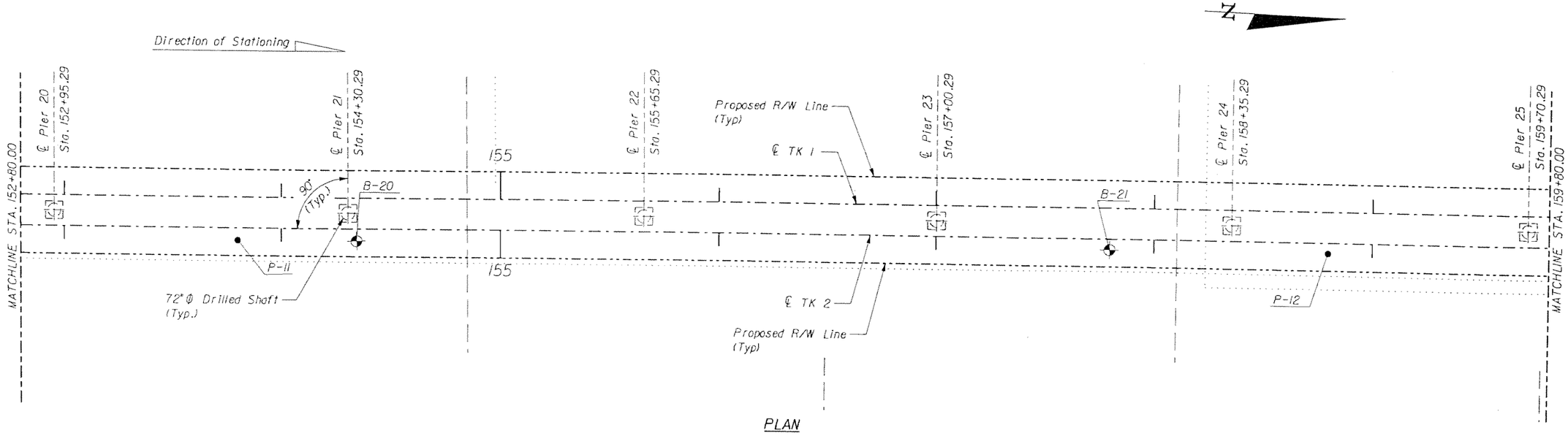

PLAN

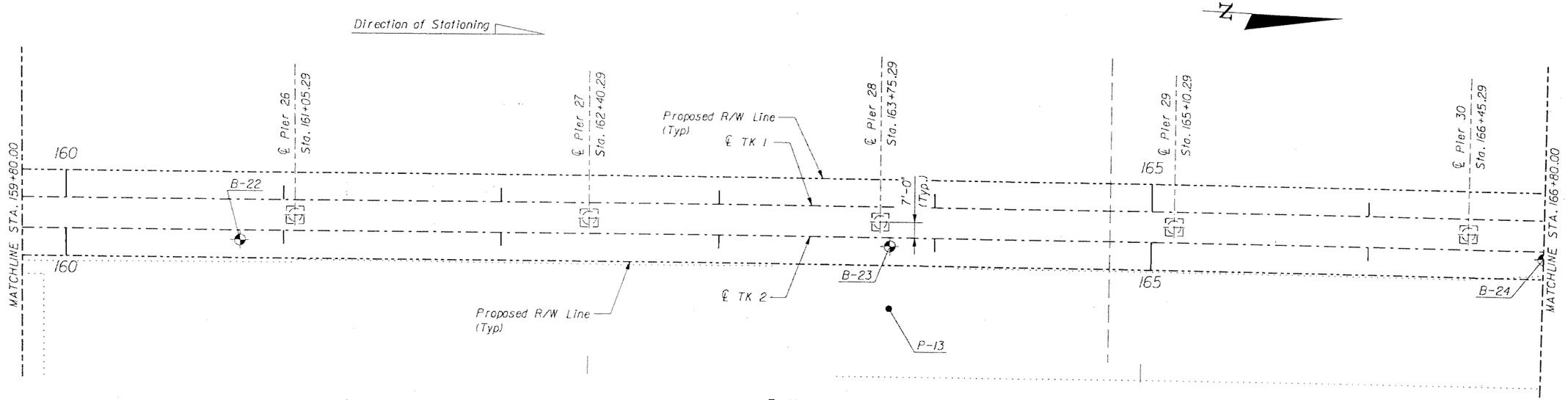

PLAN

NOTES:
1. For Horizontal Curve Data see, Trackway Plan and Profile Drawings.

GTH Designed by	1-Nov-05 Date					
JPH Drawn by	5-May-06 Date					
JER Checked by	5-May-06 Date					
TWS Approved by	5-May-06 Date	No.	Date	By / Chk.	App.	Revisions

NORTH CORRIDOR METRORAIL EXTENSION - PRELIMINARY ENGINEERING (100% SUBMITTAL)

SUBJECT TO CHANGE

STRUCTURES - GUIDEWAY (CONCRETE)

MIAMI-DADE COUNTY

MIAMI-DADE TRANSIT

PARSONS
7600 CORPORATE CENTER DRIVE, SUITE 500
MIAMI, FLORIDA 33126
PHONE: (786) 464-1000 FAX: (786) 845-7119
CERTIFICATE OF AUTHORIZATION NO. 1838

Approved | Date | Approved | Date

FOUNDATION LAYOUT 7

Scale 1" = 50' | Drawing SGC- 87 | Sheet 298

5/9/2006 4:28:28 PM p:\646331_north_corridor\cadd\dgn\new alignment\foundation-07.dgn

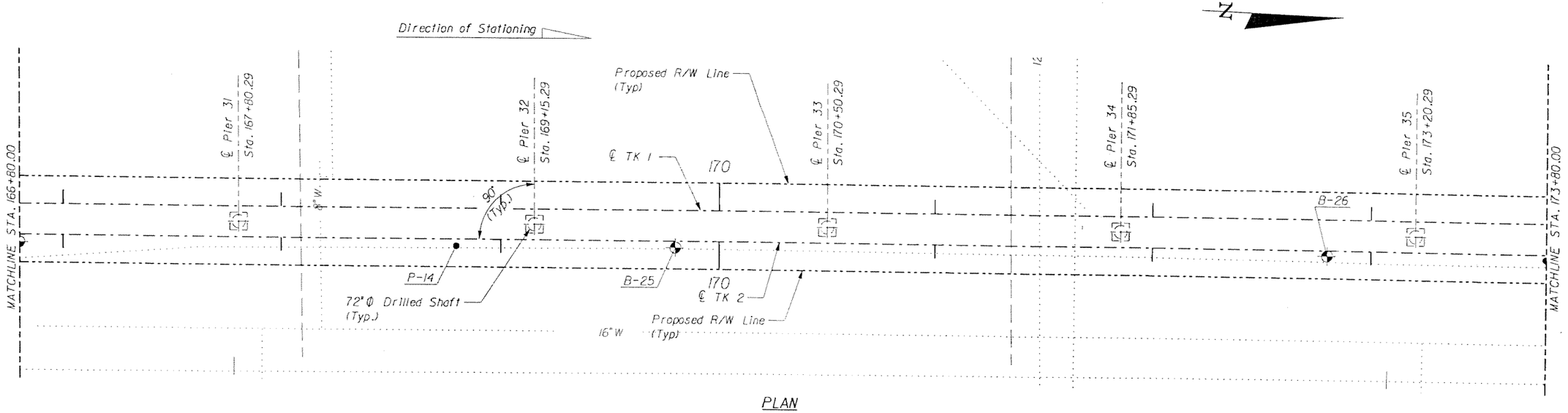

PLAN

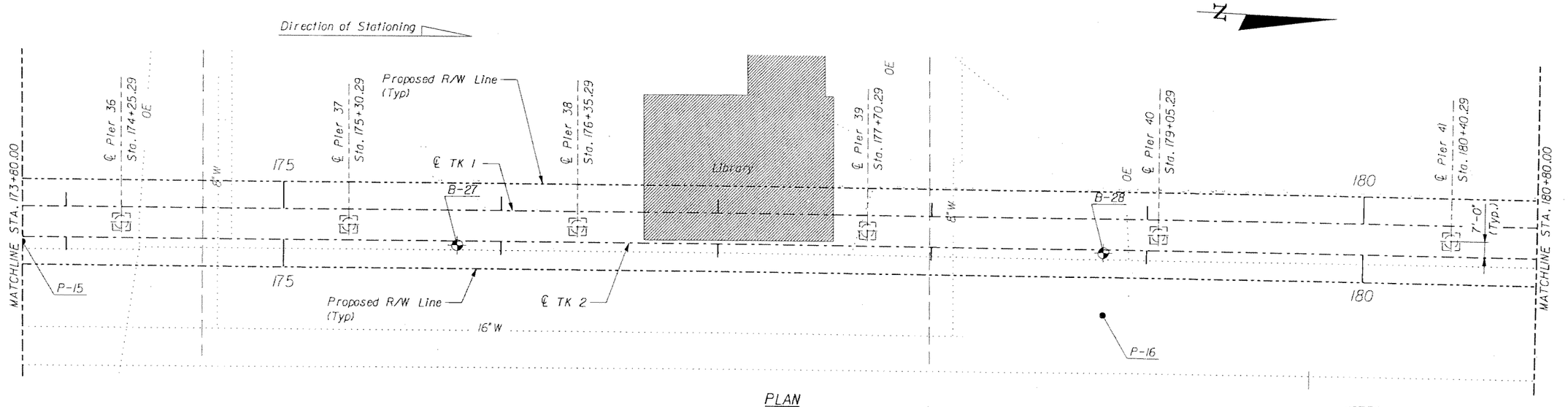

PLAN

NOTES:
1. For Horizontal Curve Data see, Trackway Plan and Profile Drawings.

SUBJECT TO CHANGE

GTH Designed by	1-Nov-05 Date					
JPH Drawn by	5-May-06 Date					
JER Checked by	5-May-06 Date					
TWS Approved by	5-May-06 Date	No.	Date	By / Chk	App.	Revisions

NORTH CORRIDOR METRORAIL EXTENSION - PRELIMINARY ENGINEERING (100% SUBMITTAL)

MIAMI-DADE COUNTY — MIAMI-DADE TRANSIT

PARSONS
7600 CORPORATE CENTER DRIVE, SUITE 500
MIAMI, FLORIDA 33126
PHONE: (786) 464-1000 FAX: (786) 845-7119
CERTIFICATE OF AUTHORIZATION NO. 1636

Approved / Date

Approved / Date

STRUCTURES - GUIDEWAY (CONCRETE)

FOUNDATION LAYOUT 8

Scale 1" = 50' | Drawing SGC- 88 | Sheet 299

5/9/2006 4:28:28 PM g:\646331_north_corridor\cadd\dgn\new alignment\foundation-08.dgn

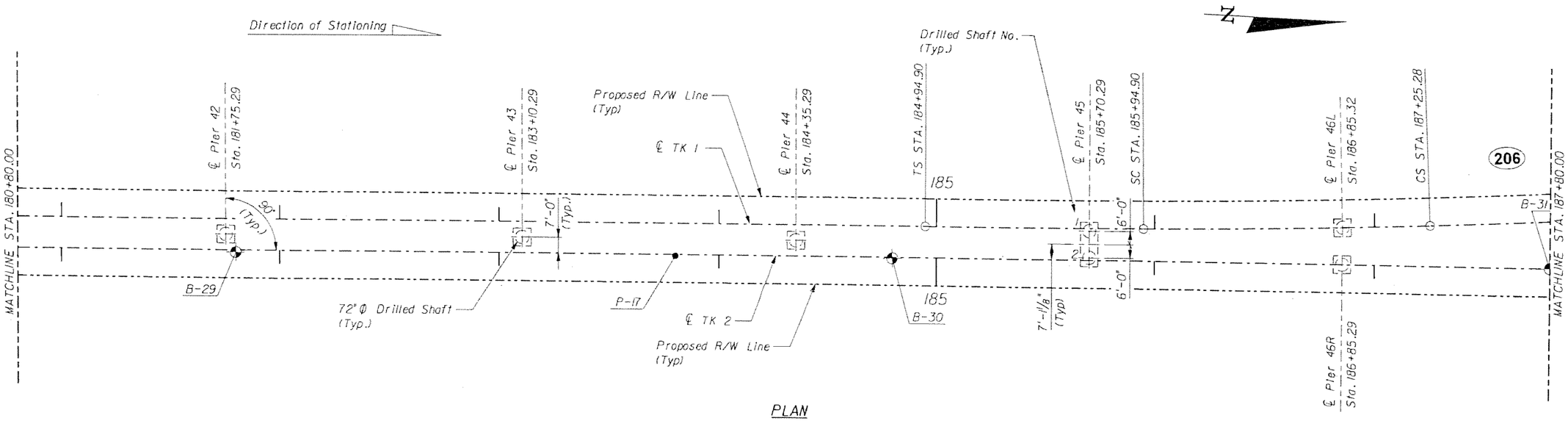

PLAN

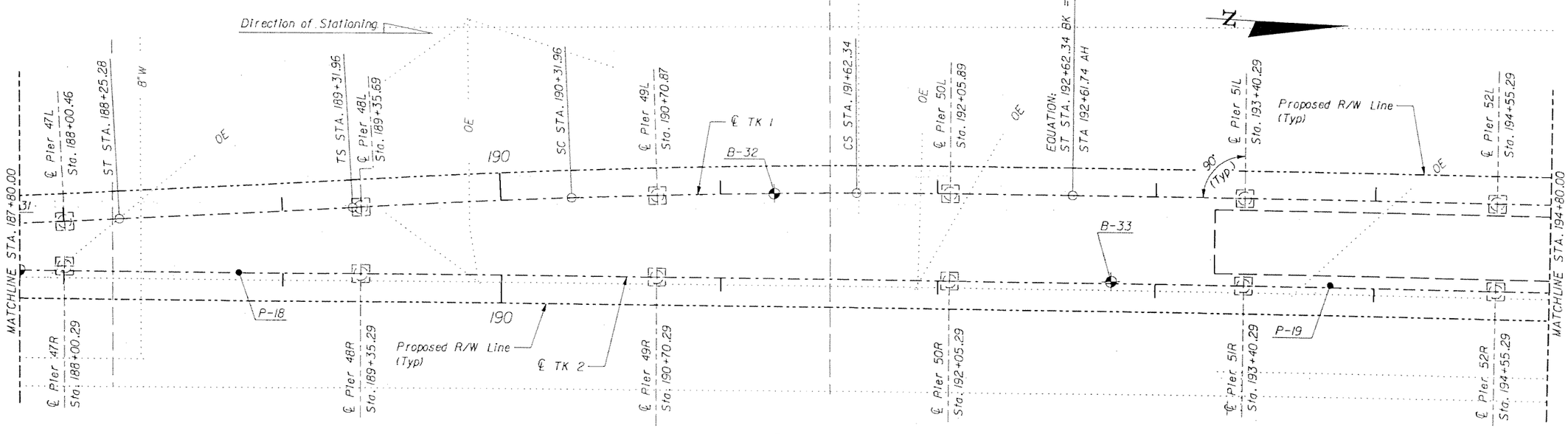

PLAN

NOTES:
1. For Horizontal Curve Data see, Trackway Plan and Profile Drawings.

SUBJECT TO CHANGE

GTH Designed by	1-Nov-05 Date					
JPH Drawn by	5-May-06 Date					
JER Checked by	5-May-06 Date					
TWS Approved by	5-May-06 Date	No.	Date	By / Chkd	App.	Revisions

NORTH CORRIDOR METRORAIL EXTENSION - PRELIMINARY ENGINEERING (100% SUBMITTAL)

MIAMI-DADE COUNTY — MIAMI-DADE TRANSIT

PARSONS
7600 CORPORATE CENTER DRIVE, SUITE 500
MIAMI, FLORIDA 33126
PHONE: (786) 464-1000 FAX: (786) 845-7119
CERTIFICATE OF AUTHORIZATION NO. 1838

Approved | Date | Approved | Date

STRUCTURES - GUIDEWAY (CONCRETE)

FOUNDATION LAYOUT 9

Scale 1" = 50' | Drawing SGC- 89 | Sheet 300

05/09/2006 05:55:28 PM g:\646331_north_corridor\cadd\dgn\new alignment\foundation-09.dgn

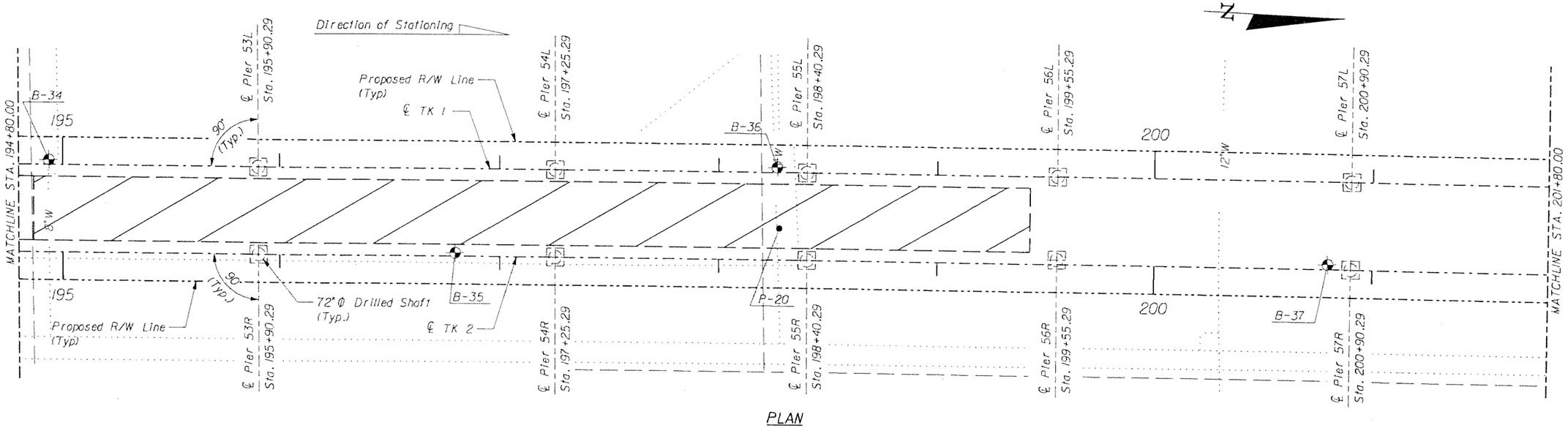

PLAN

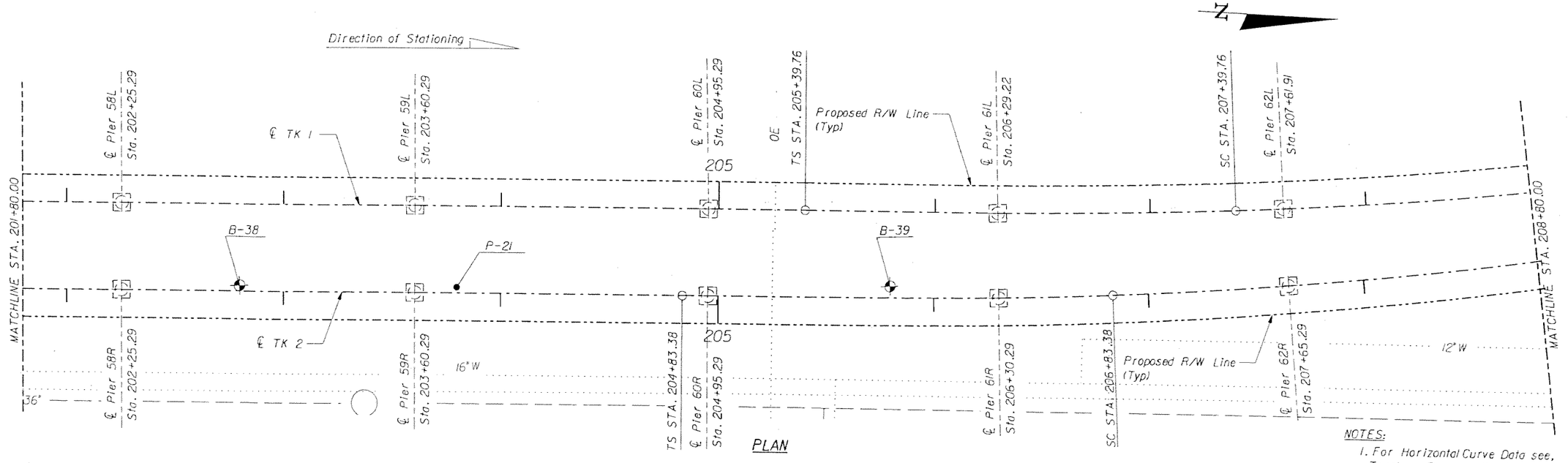

PLAN

NOTES:
1. For Horizontal Curve Data see, Trackway Plan and Profile Drawings.

SUBJECT TO CHANGE

GTH	1-Nov-05				
Designed by	Date				
JPH	5-May-06				
Drawn by	Date				
JER	5-May-06				
Checked by	Date				
TWS	5-May-06				
Approved by	Date	No.	Date	By / Chk.	App.	Revisions

NORTH CORRIDOR METRORAIL EXTENSION - PRELIMINARY ENGINEERING (100% SUBMITTAL)

STRUCTURES - GUIDEWAY (CONCRETE)

MIAMI-DADE COUNTY

MIAMI-DADE TRANSIT

PARSONS
7600 CORPORATE CENTER DRIVE, SUITE 500
MIAMI, FLORIDA 33126
PHONE: (786) 464-1000 FAX: (786) 845-7119
CERTIFICATE OF AUTHORIZATION NO. 1838

FOUNDATION LAYOUT 10

Approved	Date	Approved	Date	Scale	Drawing	Sheet
				1" = 50'	SGC- 90	301

5/9/2006 4:28:41 PM p:\646331_north_corridor\cadd\dgn\new alignment\foundation-10.dgn

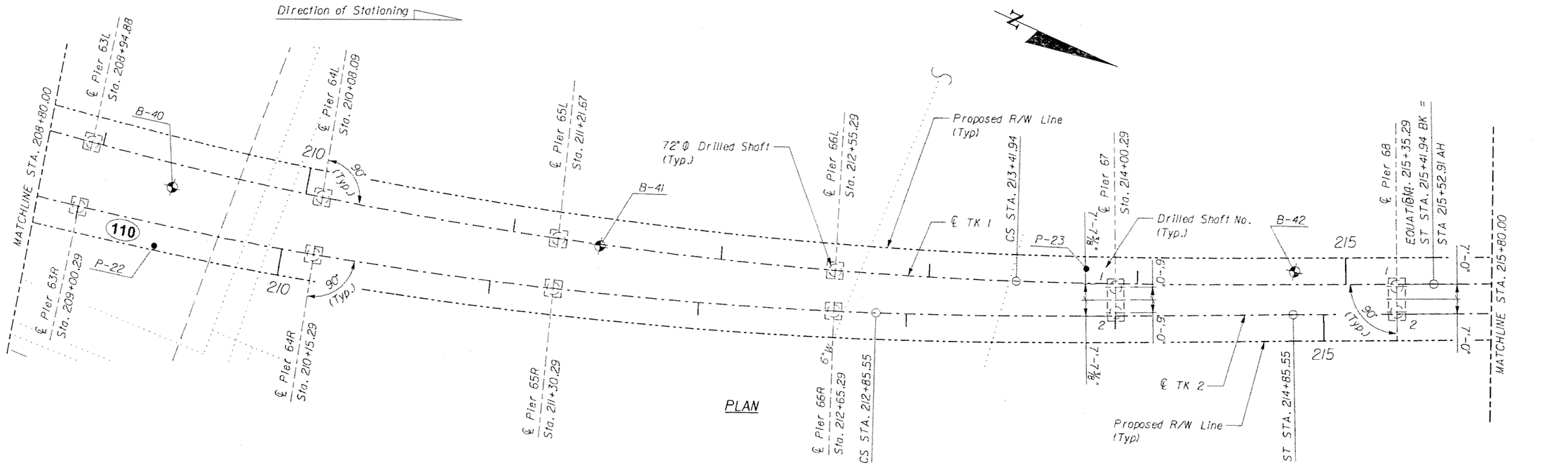

NOTES:

1. For Horizontal Curve Data see, Trackway Plan and Profile Drawings.

SUBJECT TO CHANGE

GTH	1-Nov-05					
Designed by	Date					
JPH	5-May-06					
Drawn by	Date					
JER	5-May-06					
Checked by	Date					
TWS	5-May-06					
Approved by	Date	No.	Date	By / Chk	App.	Revisions

NORTH CORRIDOR METRORAIL EXTENSION - PRELIMINARY ENGINEERING (100% SUBMITTAL)

STRUCTURES - GUIDEWAY (CONCRETE)

MIAMI-DADE COUNTY

MIAMI-DADE TRANSIT

PARSONS
7600 CORPORATE CENTER DRIVE, SUITE 500
MIAMI, FLORIDA 33126
PHONE: (786) 464-1000 FAX: (786) 845-7119
CERTIFICATE OF AUTHORIZATION NO. 1838

Approved | Date

Approved | Date

FOUNDATION LAYOUT 11

Scale 1" = 50' | Drawing SGC- 91 | Sheet 302

05/09/2006 05:53:40 PM G:\646331_North_Corridor\CADD\Dgn\New Alignment\FOUNDATION-11.dgn

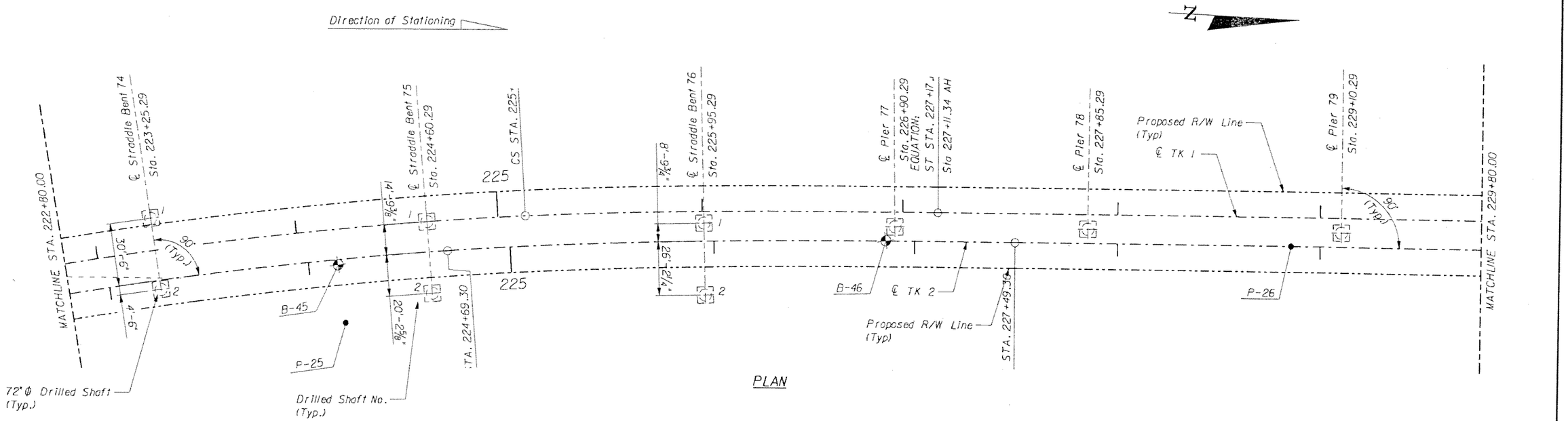

PLAN

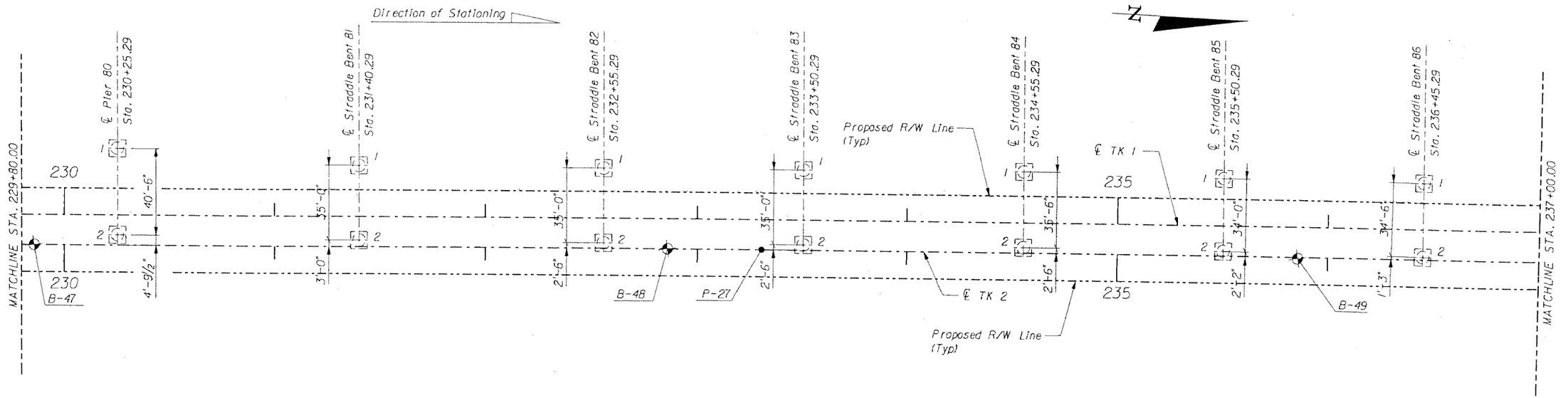

PLAN

NOTES:
1. For Horizontal Curve Data see, Trackway Plan and Profile Drawings.

SUBJECT TO CHANGE

GTH Designed by	1-Nov-05 Date				
JPH Drawn by	5-May-06 Date				
JER Checked by	5-May-06 Date				
TWS Approved by	5-May-06 Date	No.	Date	By / Chk	App.	Revisions

NORTH CORRIDOR METRORAIL EXTENSION - PRELIMINARY ENGINEERING (100% SUBMITTAL)

MIAMI-DADE COUNTY

MIAMI-DADE TRANSIT

PARSONS
7600 CORPORATE CENTER DRIVE, SUITE 500
MIAMI, FLORIDA 33126
PHONE: (786) 464-1000 FAX: (786) 845-7119
CERTIFICATE OF AUTHORIZATION NO. 1838

Approved | Date

Approved | Date

STRUCTURES - GUIDEWAY (CONCRETE)

FOUNDATION LAYOUT 12

Scale 1" = 50' | Drawing SGC- 92 | Sheet 303

05/09/2006 05:53:42 PM g:\648331_north_corridor\caddd\gn\view alignment\foundation-12.dgn

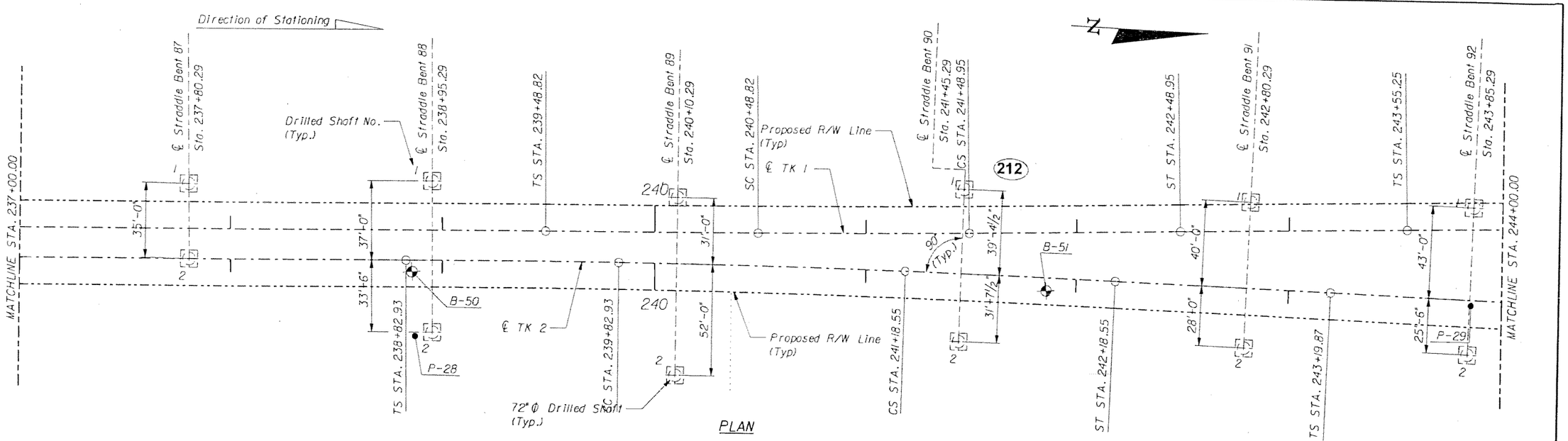

NOTES:

1. For Horizontal Curve Data see, Trackway Plan and Profile Drawings.

SUBJECT TO CHANGE

GTH	1-Nov-05					
Designed by	Date					
JPH	5-May-06					
Drawn by	Date					
JER	5-May-06					
Checked by	Date					
TWS	5-May-06					
Approved by	Date	No.	Date	By / Chk	App.	Revisions

NORTH CORRIDOR METRORAIL EXTENSION - PRELIMINARY ENGINEERING (100% SUBMITTAL)

STRUCTURES - GUIDEWAY (CONCRETE)

MIAMI-DADE COUNTY

MIAMI-DADE TRANSIT

PARSONS
7600 CORPORATE CENTER DRIVE, SUITE 500
MIAMI, FLORIDA 33126
PHONE: (786) 464-1000 FAX: (786) 845-7119
CERTIFICATE OF AUTHORIZATION NO. 1838

FOUNDATION LAYOUT 13

Approved	Date	Approved	Date	Scale	Drawing	Sheet
				1" = 50'	SGC- 93	30 of

05/09/2006 05:53:48 PM g:\646331_north_corridor\cadd\dgn\new alignment\foundation-13.dgn

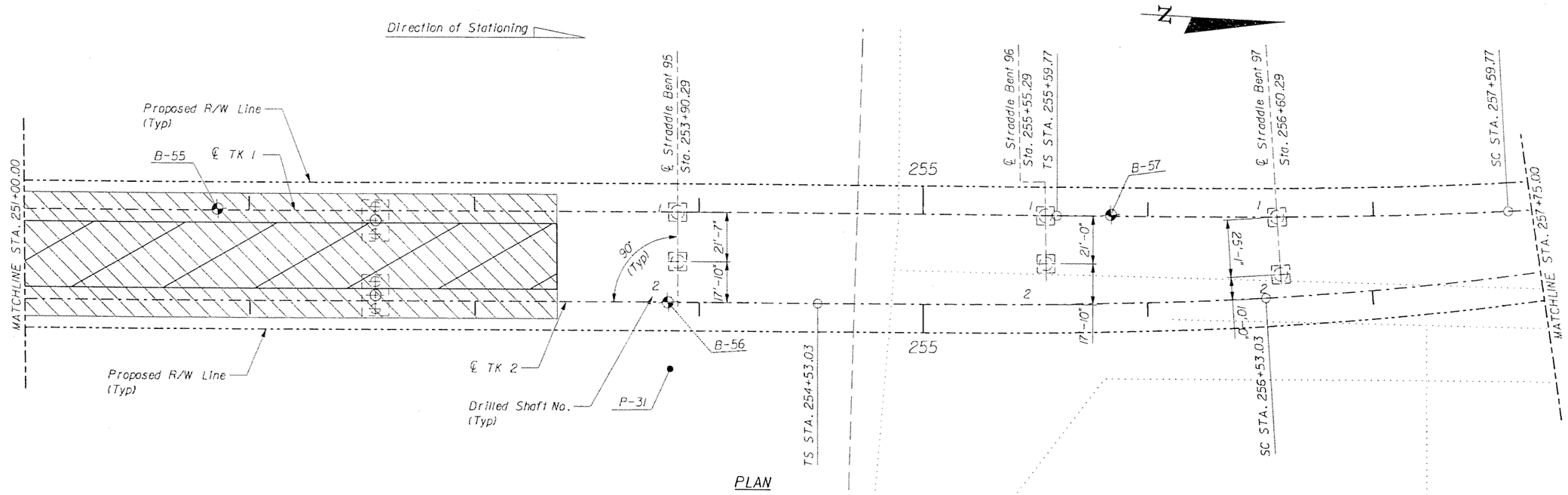

NOTES:
1. For Horizontal Curve Data see, Trackway Plan and Profile Drawings.

SUBJECT TO CHANGE

GTH	1-Nov-05					
Designed by	Date					
JPH	5-May-06					
Drawn by	Date					
JER	5-May-06					
Checked by	Date					
TWS	5-May-06					
Approved by	Date	No.	Date	By / Chk	App.	Revisions

NORTH CORRIDOR METRORAIL EXTENSION - PRELIMINARY ENGINEERING (100% SUBMITTAL)

MIAMI-DADE COUNTY

MIAMI-DADE TRANSIT

PARSONS
7600 CORPORATE CENTER DRIVE, SUITE 500
MIAMI, FLORIDA 33126
PHONE: (786) 464-1000 FAX: (786) 845-7119
CERTIFICATE OF AUTHORIZATION NO. 1836

Approved | Date | Approved | Date

STRUCTURES - GUIDEWAY (CONCRETE)

FOUNDATION LAYOUT 14

Scale 1" = 50' | Drawing SGC- 94 | Sheet 305

05/09/2006 05:53:50 PM g:\646331_north_corridor\cadd\dgn\new alignment\foundation-14.dgn

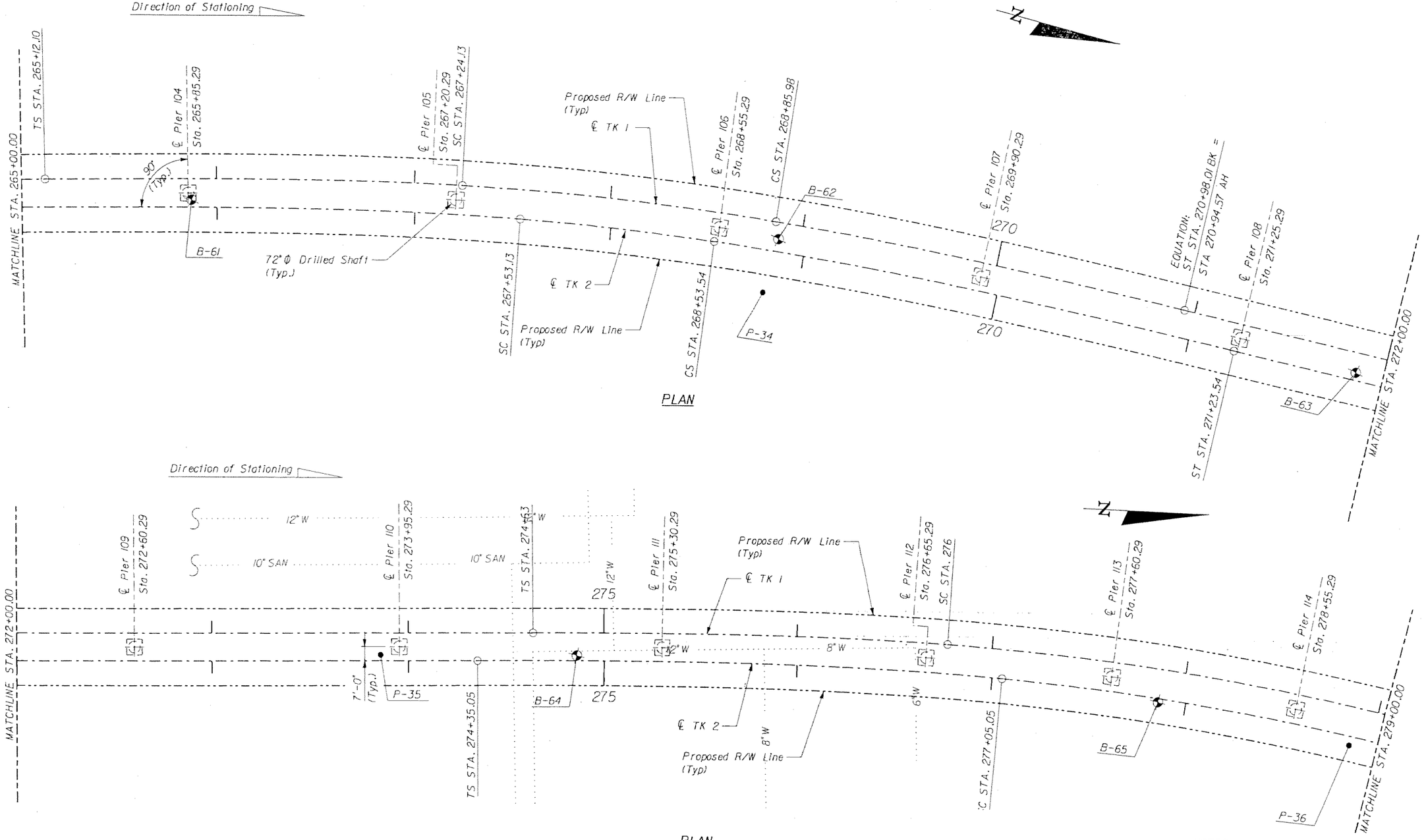

NOTES:

1. For Horizontal Curve Data see, Trackway Plan and Profile Drawings.

SUBJECT TO CHANGE

GTH Designed by	1-Nov-05 Date					
JPH Drawn by	5-May-06 Date					
JER Checked by	5-May-06 Date					
TWS Approved by	5-May-06 Date	No.	Date	By / Chk	App.	Revisions

NORTH CORRIDOR METRORAIL EXTENSION - PRELIMINARY ENGINEERING (100% SUBMITTAL)

STRUCTURES - GUIDEWAY (CONCRETE)

MIAMI-DADE COUNTY

MIAMI-DADE TRANSIT

PARSONS
7600 CORPORATE CENTER DRIVE, SUITE 500
MIAMI, FLORIDA 33126
PHONE: (786) 464-1000 FAX: (786) 845-7119
CERTIFICATE OF AUTHORIZATION NO. 1838

Approved | Date | Approved | Date

FOUNDATION LAYOUT 15

Scale 1" = 50' | Drawing SGC- 95 | Sheet 306

05/09/2006 05:53:52 PM g:\046331_north_corridor\cadd\dgn\new alignment\foundation-15.dgn

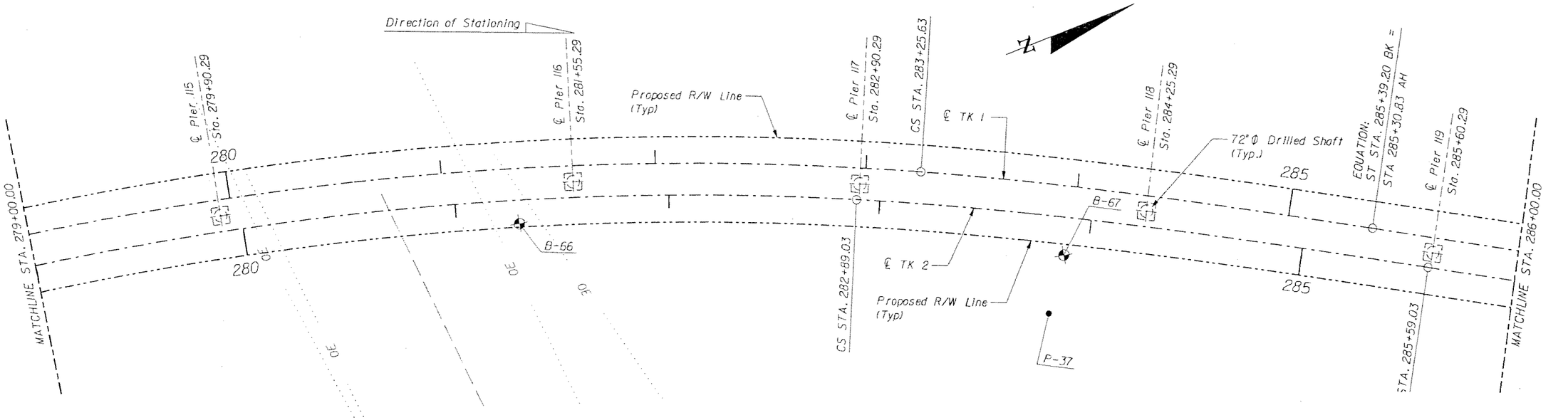

PLAN

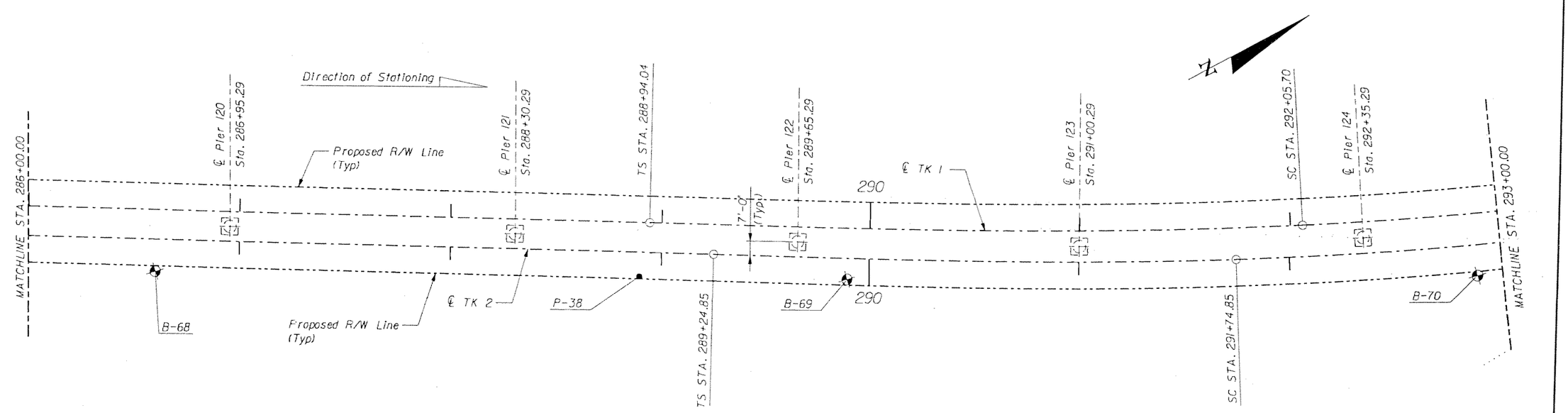

PLAN

NOTES:
1. For Horizontal Curve Data see, Trackway Plan and Profile Drawings.

GTH Designed by	1-Nov-05 Date					
JPH Drawn by	5-May-06 Date					
JER Checked by	5-May-06 Date					
TWS Approved by	5-May-06 Date	No.	Date	By / Chk.	App.	Revisions

NORTH CORRIDOR METRORAIL EXTENSION - PRELIMINARY ENGINEERING (100% SUBMITTAL)

SUBJECT TO CHANGE

STRUCTURES - GUIDEWAY (CONCRETE)

MIAMI-DADE COUNTY

MIAMI-DADE TRANSIT

PARSONS
7600 CORPORATE CENTER DRIVE, SUITE 500
MIAMI, FLORIDA 33126
PHONE: (786) 464-1000 FAX: (786) 845-7119
CERTIFICATE OF AUTHORIZATION NO. 1838

FOUNDATION LAYOUT 16

Approved | Date | Approved | Date | Scale 1" = 50' | Drawing SGC- 96 | Sheet 307

05/09/2006 05:53:54 PM g:\646331_north_corridor\cadd\dgn\new alignment\foundation-16.dgn

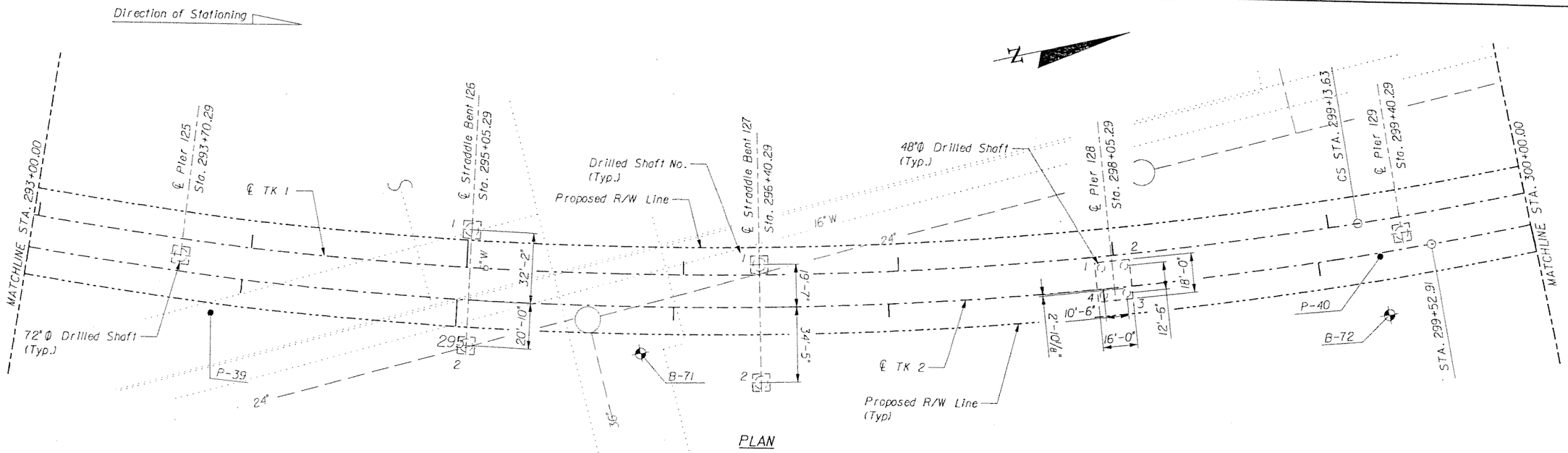

PLAN

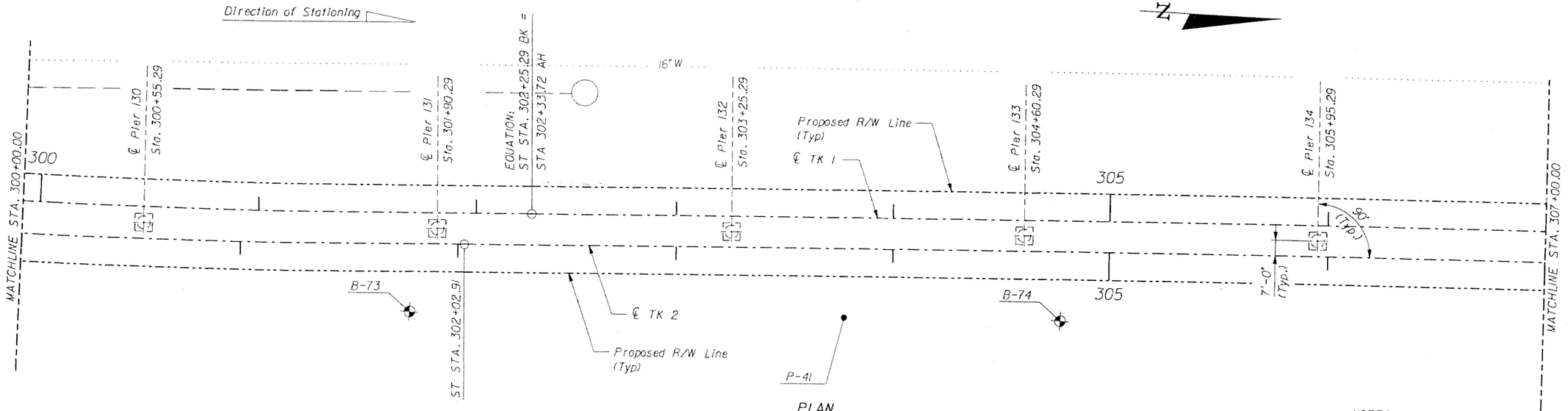

PLAN

NOTES:
1. For Horizontal Curve Data see, Trackway Plan and Profile Drawings.

SUBJECT TO CHANGE

GTH Designed by	1-Nov-05 Date					
JPH Drawn by	5-May-06 Date					
JER Checked by	5-May-06 Date					
TWS Approved by	5-May-06 Date	No.	Date	By / Chk	App.	Revisions

NORTH CORRIDOR METRORAIL EXTENSION - PRELIMINARY ENGINEERING (100% SUBMITTAL)

MIAMI-DADE COUNTY — MIAMI-DADE TRANSIT

PARSONS
7600 CORPORATE CENTER DRIVE, SUITE 500
MIAMI, FLORIDA 33126
PHONE: (786) 464-1000 FAX: (786) 845-7119
CERTIFICATE OF AUTHORIZATION NO. 1838

Approved / Date

Approved / Date

STRUCTURES - GUIDEWAY (CONCRETE)

FOUNDATION LAYOUT 17

Scale 1" = 50' | Drawing SGC- 97 | Sheet 308

5/9/2006 6:05:50 PM g:\646331_North_Corridor\CADD\Dgn\New Alignment\FOUNDATION-17.dgn

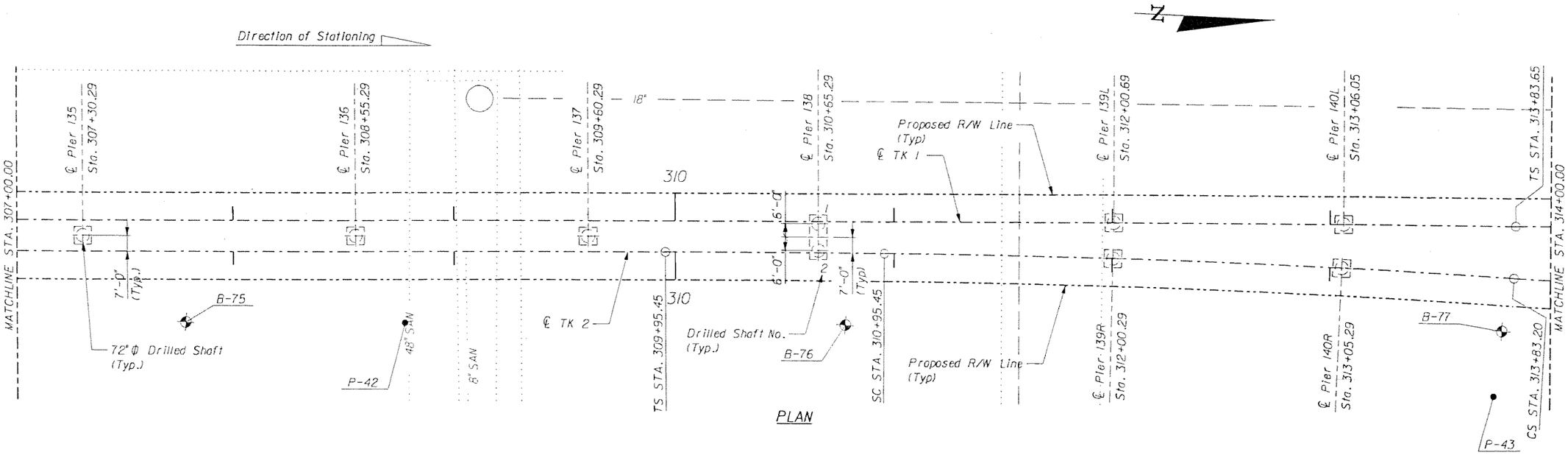

NOTES:

1. For Horizontal Curve Data see, Trackway Plan and Profile Drawings.

SUBJECT TO CHANGE

GTH	1-Nov-05				
Designed by	Date				
JPH	5-May-06				
Drawn by	Date				
JER	5-May-06				
Checked by	Date				
TWS	5-May-06				
Approved by	Date	No.	Date	By / Chk	App.	Revisions

NORTH CORRIDOR METRORAIL EXTENSION - PRELIMINARY ENGINEERING (100% SUBMITTAL)

MIAMI-DADE COUNTY

MIAMI-DADE TRANSIT

PARSONS
7600 CORPORATE CENTER DRIVE, SUITE 500
MIAMI, FLORIDA 33126
PHONE: (786) 464-1000 FAX: (786) 845-7119
CERTIFICATE OF AUTHORIZATION NO. 1838

Approved / Date

Approved / Date

STRUCTURES - GUIDEWAY (CONCRETE)

FOUNDATION LAYOUT 18

Scale 1" = 50' | Drawing SGC- 98 | Sheet 309

05/09/2006 05:54:01 PM g:\646331_north_corridor\cadd\dgn\new alignment\foundation-18.dgn

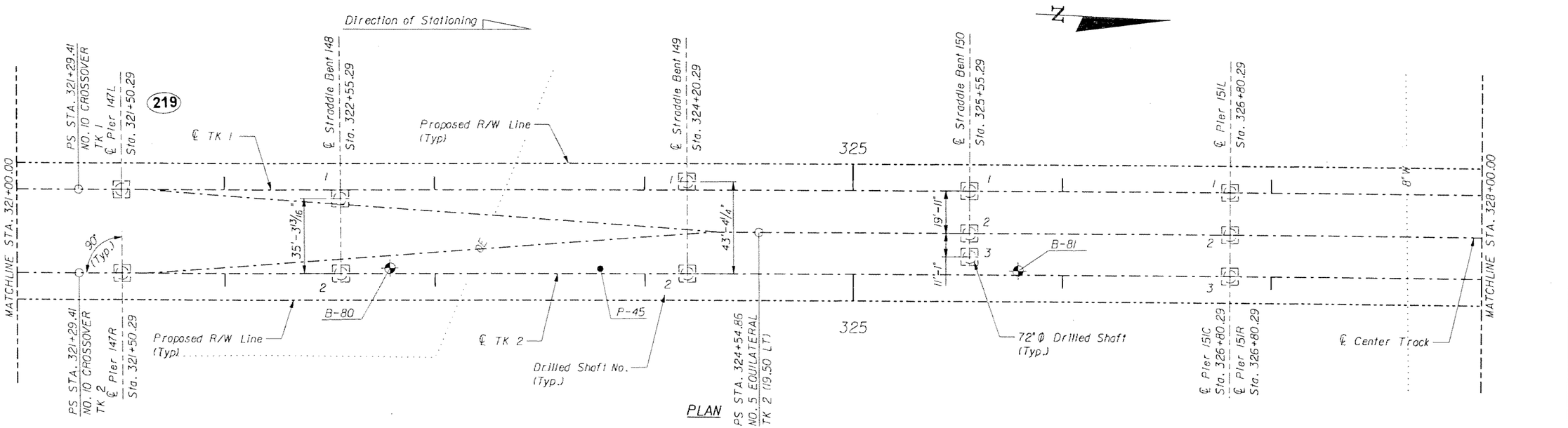

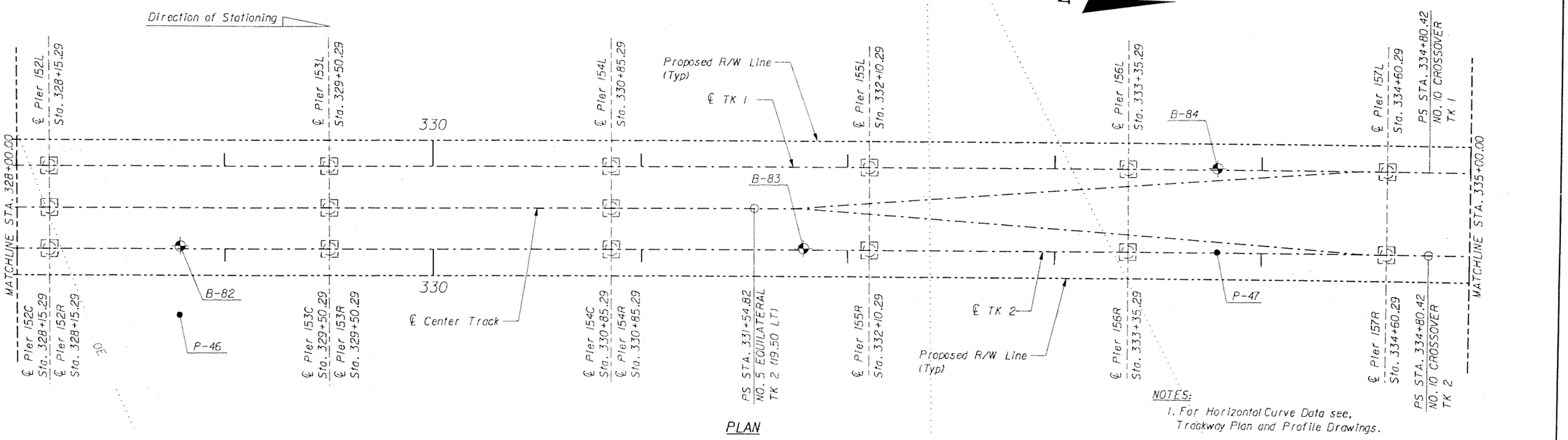

NOTES:
1. For Horizontal Curve Data see, Trackway Plan and Profile Drawings.

SUBJECT TO CHANGE

GTH	1-Nov-05					
Designed by	Date					
JPH	5-May-06					
Drawn by	Date					
JER	5-May-06					
Checked by	Date					
TWS	5-May-06					
Approved by	Date	No.	Date	By / Chk	App.	Revisions

NORTH CORRIDOR METRORAIL EXTENSION - PRELIMINARY ENGINEERING (100% SUBMITTAL)

STRUCTURES - GUIDEWAY (CONCRETE)

MIAMI-DADE COUNTY

MIAMI-DADE TRANSIT

PARSONS
7600 CORPORATE CENTER DRIVE, SUITE 500
MIAMI, FLORIDA 33126
PHONE: (786) 464-1000 FAX: (786) 845-7119
CERTIFICATE OF AUTHORIZATION NO. 1638

Approved | Date

Approved | Date

FOUNDATION LAYOUT 19

Scale 1" = 50' | Drawing SGC- 99 | Sheet 31D

05/09/2006 06:04:48 PM G:\646331_North_Corridor\CADD\Dgn\New Alignment\FOUNDATION-19.dgn

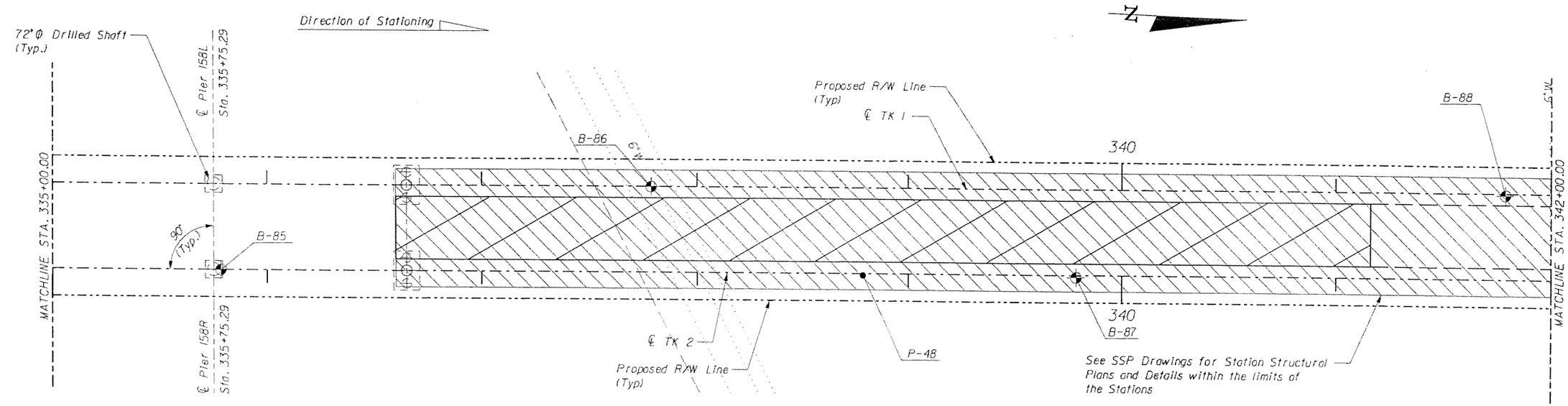

PLAN

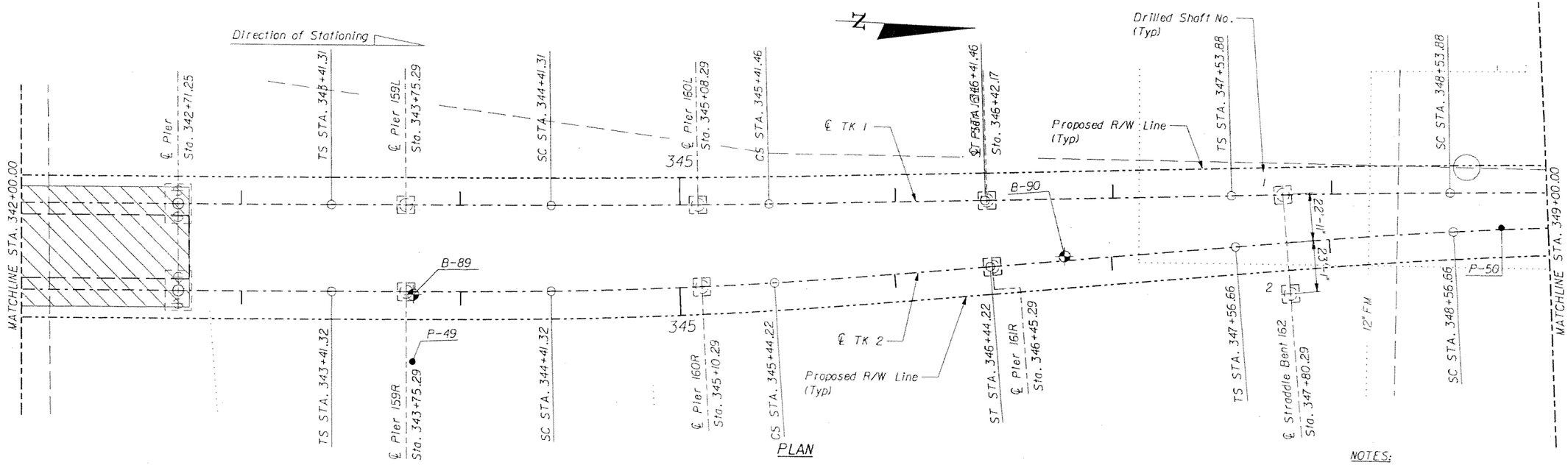

PLAN

NOTES:

1. For Horizontal Curve Data see, Trackway Plan and Profile Drawings.

GTH Designed by	1-Nov-05 Date					
JPH Drawn by	5-May-06 Date					
JER Checked by	5-May-06 Date					
TWS Approved by	5-May-06 Date	No.	Date	By / Chk.	App.	Revisions

SUBJECT TO CHANGE

NORTH CORRIDOR METRORAIL EXTENSION - PRELIMINARY ENGINEERING (100% SUBMITTAL)

STRUCTURES - GUIDEWAY (CONCRETE)

MIAMI-DADE COUNTY

MIAMI-DADE TRANSIT

PARSONS
7600 CORPORATE CENTER DRIVE, SUITE 500
MIAMI, FLORIDA 33126
PHONE: (786) 464-1000 FAX: (786) 845-7119
CERTIFICATE OF AUTHORIZATION NO. 1838

FOUNDATION LAYOUT 20

Approved / Date

Approved / Date

Scale 1" = 50' | Drawing SGC- 100 | Sheet 311

05/09/2006 05:54:05 PM g:\646331_north_corridor\cadd\dgn\new alignment\foundation-20.dgn

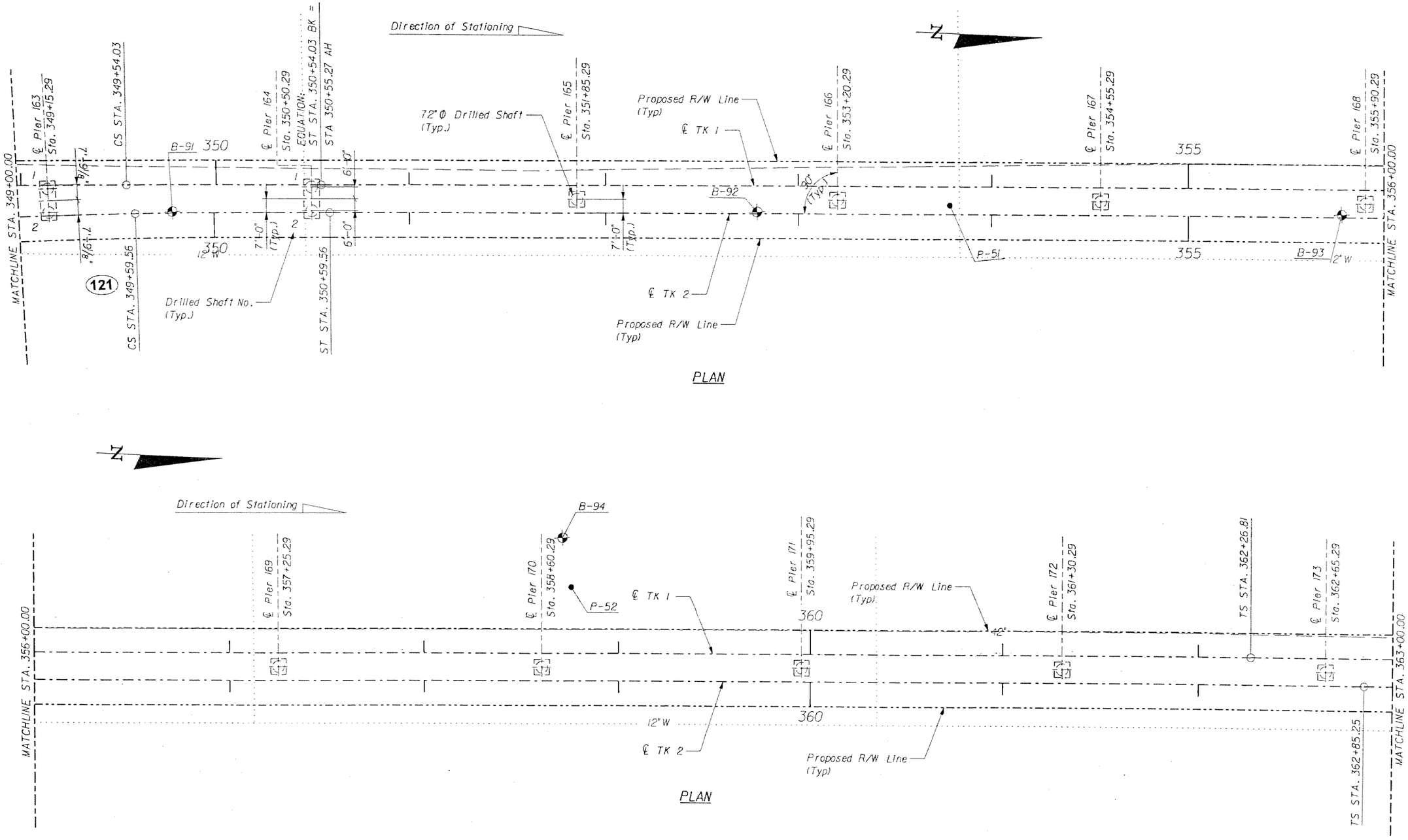

PLAN

PLAN

NOTES:

1. For Horizontal Curve Data see, Trackway Plan and Profile Drawings.

SUBJECT TO CHANGE

GTH 1-Nov-05 Designed by Date						
JPH 5-May-06 Drawn by Date						
JER 5-May-06 Checked by Date						
TWS 5-May-06 Approved by Date	No.	Date	By / Chk	App.	Revisions	

NORTH CORRIDOR METRORAIL EXTENSION - PRELIMINARY ENGINEERING (100% SUBMITTAL)

STRUCTURES - GUIDEWAY (CONCRETE)

MIAMI-DADE COUNTY

MIAMI-DADE TRANSIT

PARSONS
7600 CORPORATE CENTER DRIVE, SUITE 500
MIAMI, FLORIDA 33126
PHONE: (786) 464-1000 FAX: (786) 845-7119
CERTIFICATE OF AUTHORIZATION NO. 1838

Approved | Date | Approved | Date

FOUNDATION LAYOUT 21

Scale 1" = 50' | Drawing SGC- 101 | Sheet 312

05/09/2006 05:54:10 PM g:\646331_north_corridor\cadd\dgn\new alignment\foundation-21.dgn

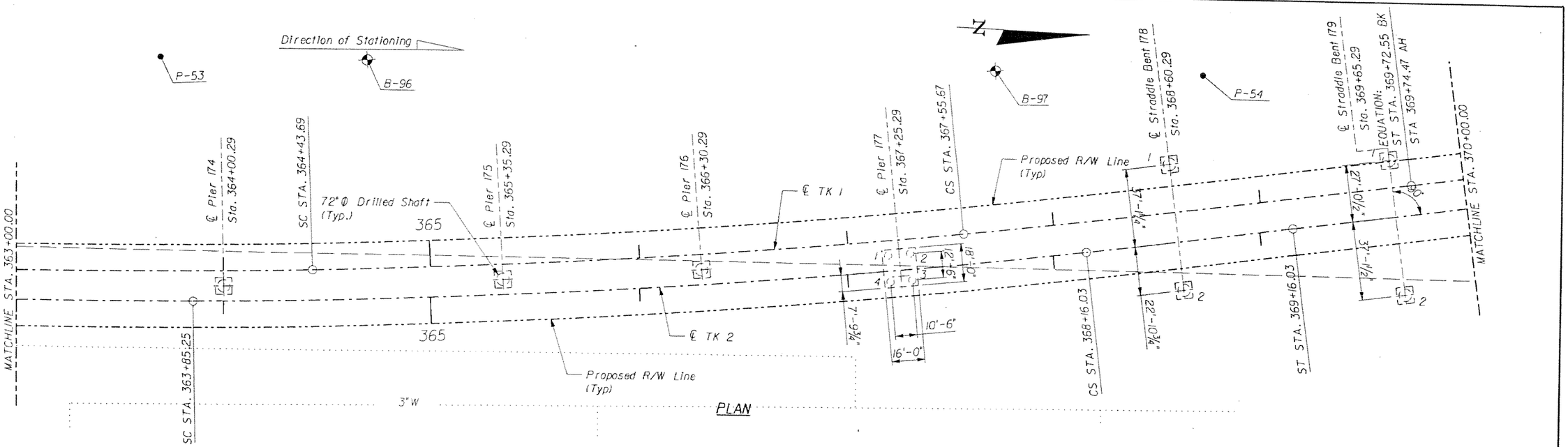

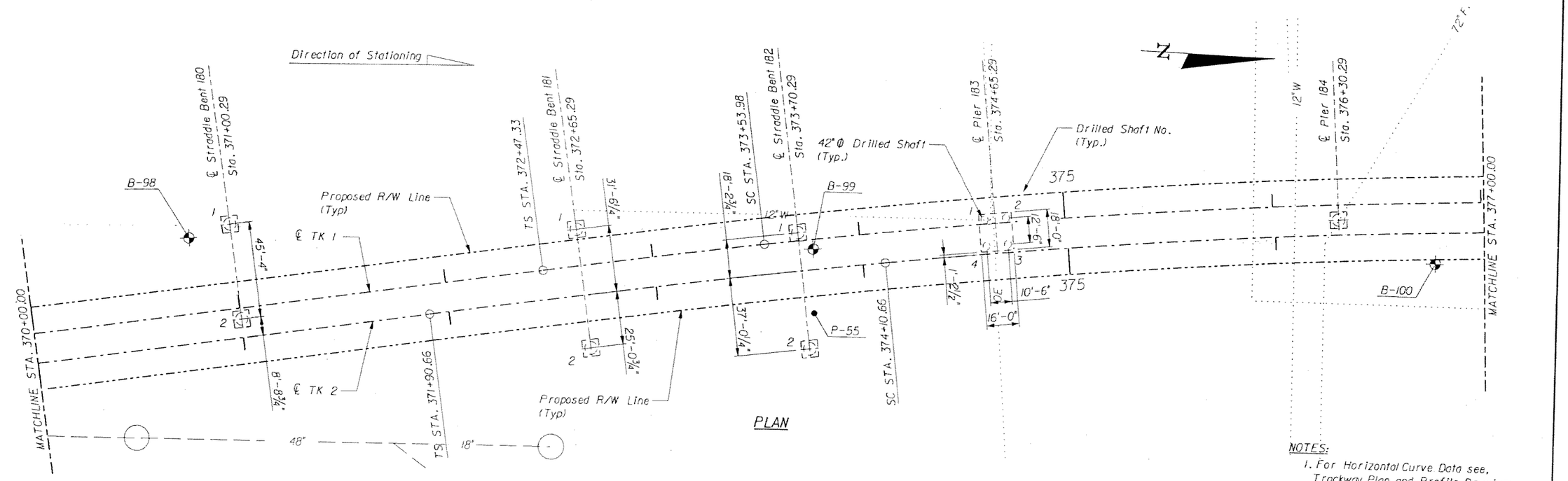

NOTES:
1. For Horizontal Curve Data see, Trackway Plan and Profile Drawings.

GTH	1-Nov-05					
Designed by	Date					
jph	5-May-06					
Drawn by	Date					
JER	5-May-06					
Checked by	Date					
TWS	5-May-06					
Approved by	Date	No.	Date	By / Chk	App.	Revisions

NORTH CORRIDOR METRORAIL EXTENSION - PRELIMINARY ENGINEERING (100% SUBMITTAL)

SUBJECT TO CHANGE

MIAMI-DADE COUNTY

MIAMI-DADE TRANSIT

PARSONS
7600 CORPORATE CENTER DRIVE, SUITE 500
MIAMI, FLORIDA 33126
PHONE: (786) 464-1000 FAX: (786) 845-7119
CERTIFICATE OF AUTHORIZATION NO. 1838

Approved	Date	Approved	Date

STRUCTURES - GUIDEWAY (CONCRETE)

FOUNDATION LAYOUT 22

Scale	Drawing	Sheet
1" = 50'	SGC- 102	313

05/09/2006 05:54:13 PM g:\646331_north_corridor\cadd\dgn\new alignment\foundation-22.dgn

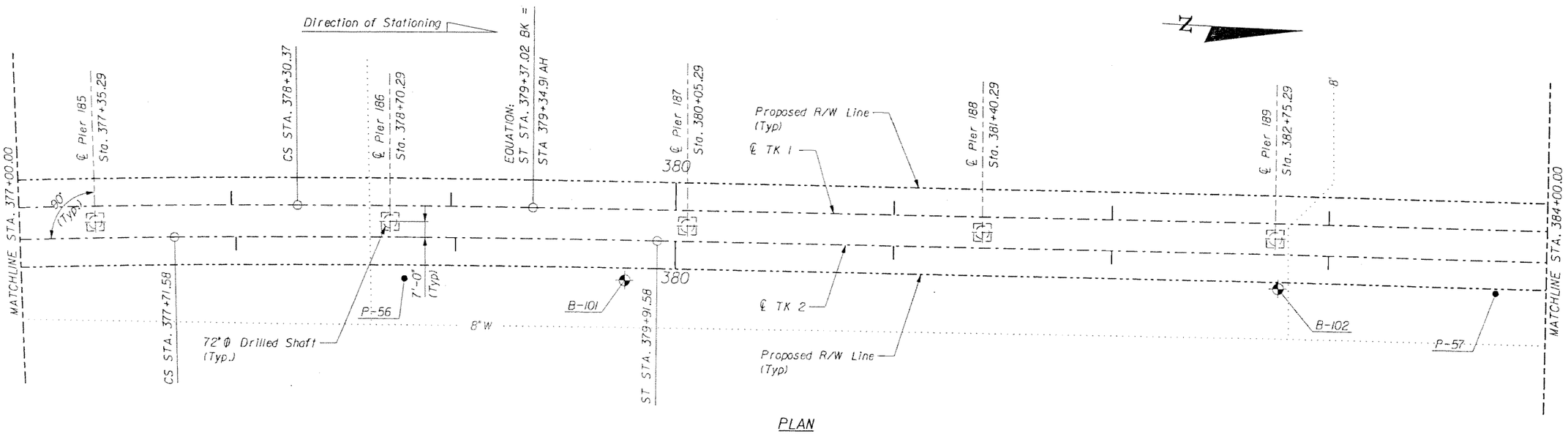

NOTES:

1. For Horizontal Curve Data see, Trackway Plan and Profile Drawings.

SUBJECT TO CHANGE

GTH	1-Nov-05					
Designed by	Date					
JPH	5-May-06					
Drawn by	Date					
JER	5-May-06					
Checked by	Date					
TWS	5-May-06					
Approved by	Date	No.	Date	By / Chk	App.	Revisions

NORTH CORRIDOR METRORAIL EXTENSION - PRELIMINARY ENGINEERING (100% SUBMITTAL)

MIAMI-DADE COUNTY

MIAMI-DADE TRANSIT

PARSONS
7600 CORPORATE CENTER DRIVE, SUITE 500
MIAMI, FLORIDA 33126
PHONE: (786) 464-1000 FAX: (786) 845-7119
CERTIFICATE OF AUTHORIZATION NO. 1836

Approved ____ Date ____

Approved ____ Date ____

STRUCTURES - GUIDEWAY (CONCRETE)

FOUNDATION LAYOUT 23

Scale 1" = 50' | Drawing SGC- 103 | Sheet 314

05/09/2006 05:54:15 PM g:\648331_north_corridor\cadd\dgn\new alignment\foundation-23.dgn

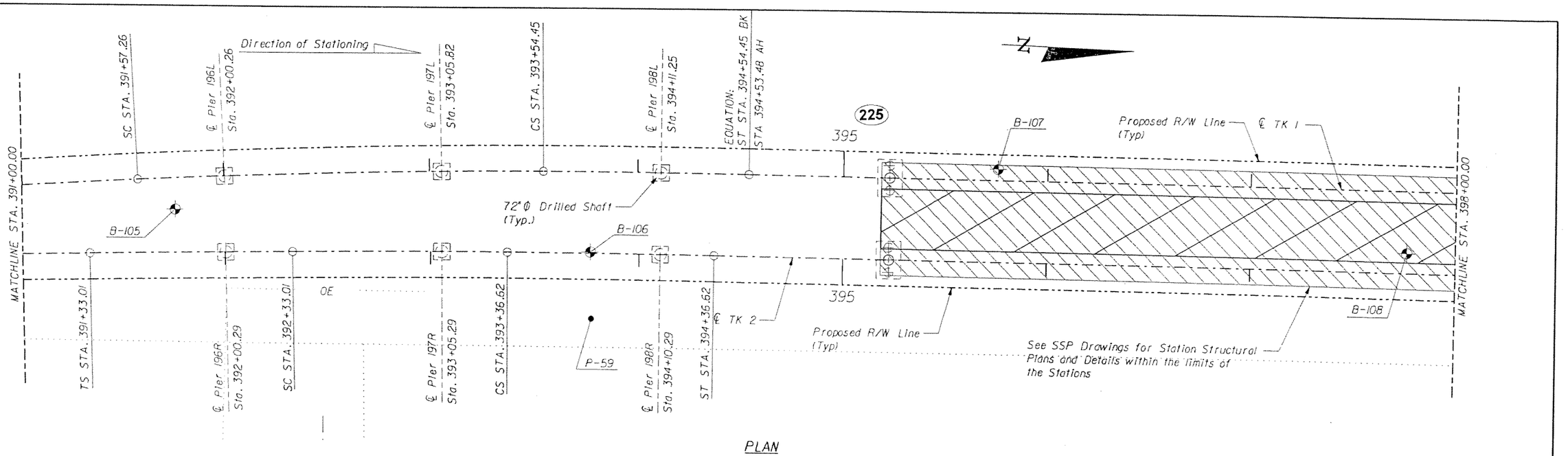

NOTES:
1. For Horizontal Curve Data see, Trackway Plan and Profile Drawings.

GTH Designed by	1-Nov-05 Date				
JPH Drawn by	5-May-06 Date				
JER Checked by	5-May-06 Date				
TWS Approved by	5-May-06 Date	No.	Date	By / Chk	App. Revisions

NORTH CORRIDOR METRORAIL EXTENSION - PRELIMINARY ENGINEERING (100% SUBMITTAL)

SUBJECT TO CHANGE

STRUCTURES - GUIDEWAY (CONCRETE)

MIAMI-DADE COUNTY

MIAMI-DADE TRANSIT

PARSONS
7600 CORPORATE CENTER DRIVE, SUITE 500
MIAMI, FLORIDA 33126
PHONE: (786) 464-1000 FAX: (786) 845-7119
CERTIFICATE OF AUTHORIZATION NO. 1838

Approved | Date

Approved | Date

FOUNDATION LAYOUT 24

Scale 1" = 50' | Drawing SGC- 104 | Sheet 315

05/09/2006 06:07:32 PM G:\646331_North_Corridor\CADD\Dgn\New Alignment\FOUNDATION-24.dgn

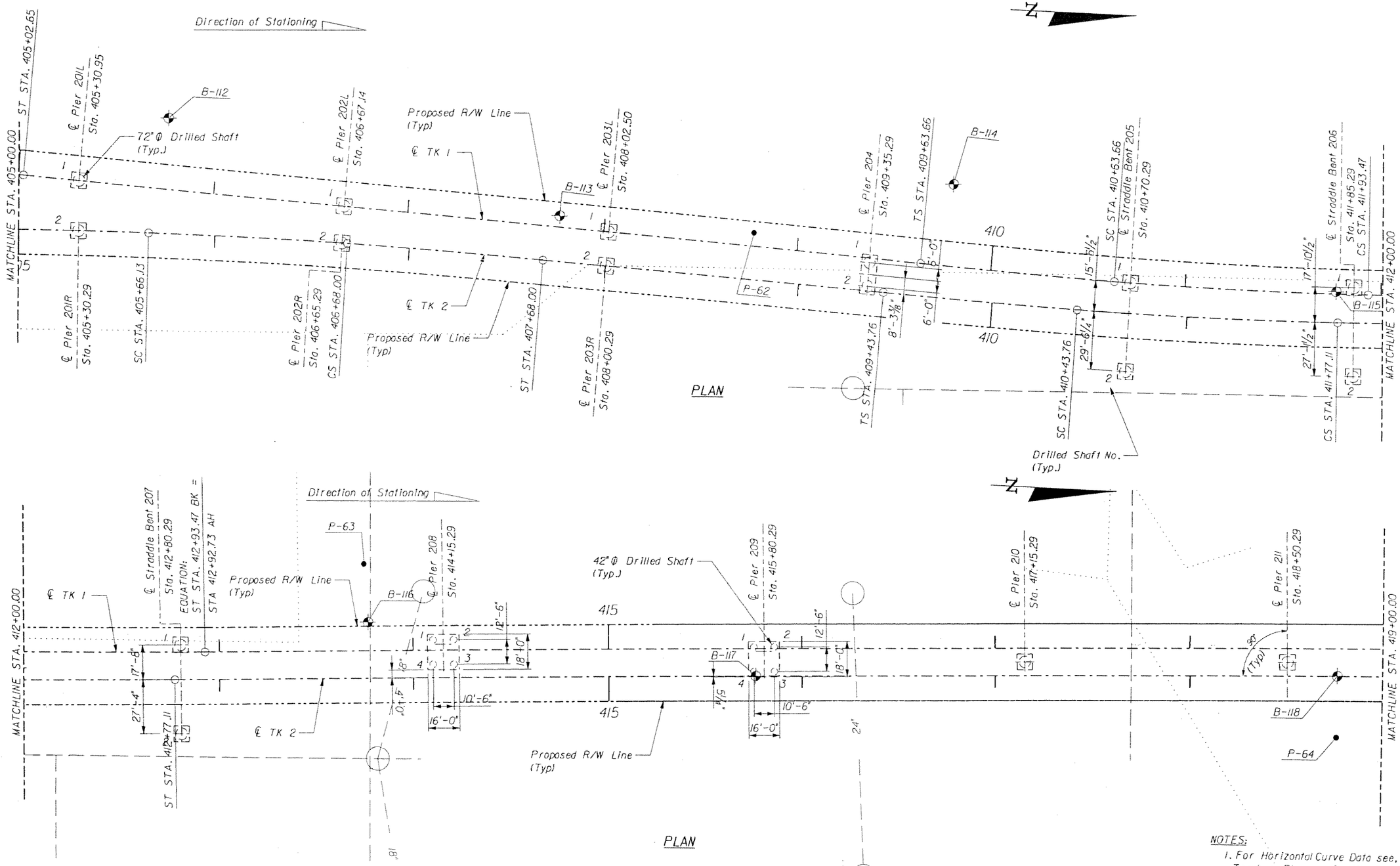

NOTES:
1. For Horizontal Curve Data see, Trackway Plan and Profile Drawings.

SUBJECT TO CHANGE

GTH	1-Nov-05					
Designed by	Date					
jph	5-May-06					
Drawn by	Date					
JER	5-May-06					
Checked by	Date					
TWS	5-May-06					
Approved by	Date	No.	Date	By / Chk	App.	Revisions

NORTH CORRIDOR METRORAIL EXTENSION - PRELIMINARY ENGINEERING (100% SUBMITTAL)

MIAMI-DADE COUNTY

MIAMI-DADE TRANSIT

PARSONS
7600 CORPORATE CENTER DRIVE, SUITE 500
MIAMI, FLORIDA 33126
PHONE: (786) 464-1000 FAX: (786) 845-7119
CERTIFICATE OF AUTHORIZATION NO. 1838

Approved | Date | Approved | Date

STRUCTURES - GUIDEWAY (CONCRETE)

FOUNDATION LAYOUT 25

Scale 1" = 50' | Drawing SGC- 105 | Sheet 316

5/9/2006 6:07:32 PM g:\846331_north_corridor\cadd\dgn\view alignment\foundation-25.dgn

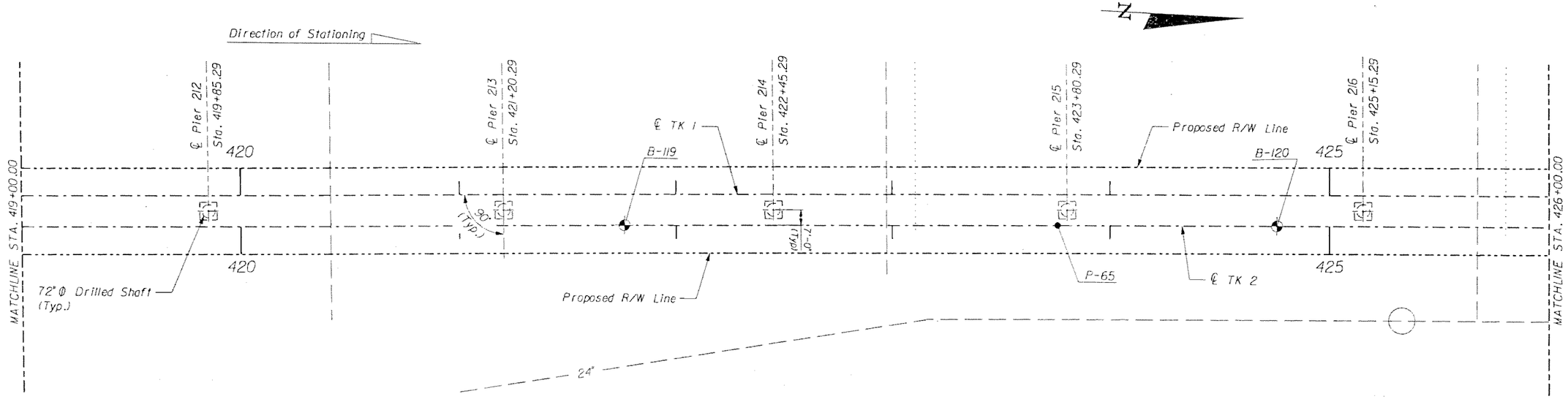

PLAN

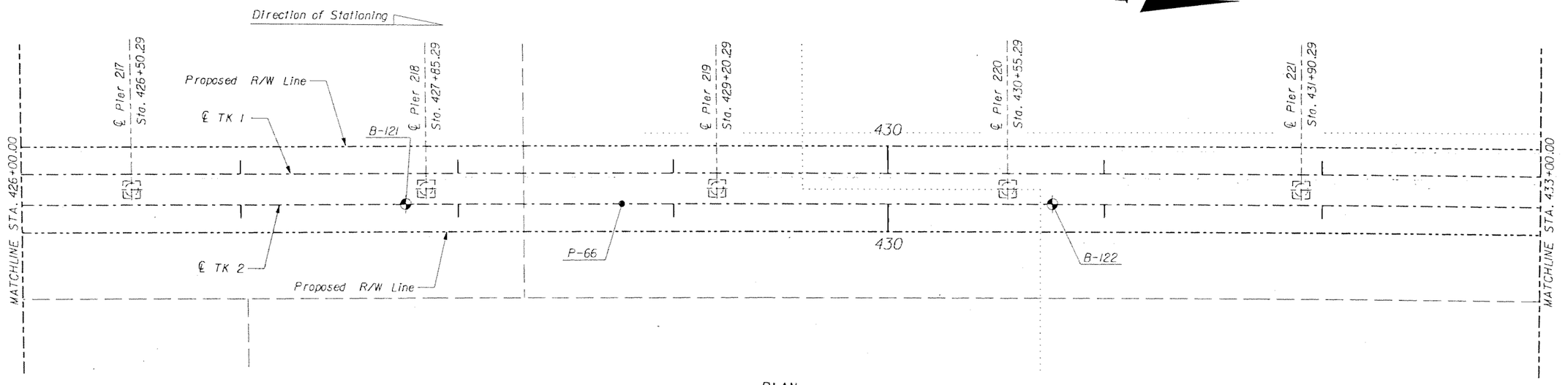

PLAN

NOTES:
1. For Horizontal Curve Data see, Trackway Plan and Profile Drawings.

SUBJECT TO CHANGE

GTH Designed by	1-Nov-05 Date					
jph Drawn by	5-May-06 Date					
JER Checked by	5-May-06 Date					
TWS Approved by	5-May-06 Date	No.	Date	By / Chk	App.	Revisions

NORTH CORRIDOR METRORAIL EXTENSION - PRELIMINARY ENGINEERING (100% SUBMITTAL)

MIAMI-DADE COUNTY — MIAMI-DADE TRANSIT

PARSONS
7600 CORPORATE CENTER DRIVE, SUITE 500
MIAMI, FLORIDA 33125
PHONE: (786) 464-1000 FAX: (786) 845-7119
CERTIFICATE OF AUTHORIZATION NO. 1838

Approved | Date | Approved | Date

STRUCTURES - GUIDEWAY (CONCRETE)

FOUNDATION LAYOUT 26

Scale 1" = 50' | Drawing SGC- 106 | Sheet 317

05/09/2006 05:54:25 PM g:\646331_north_corridor\cadd\dgn\new alignment\foundation-26.dgn

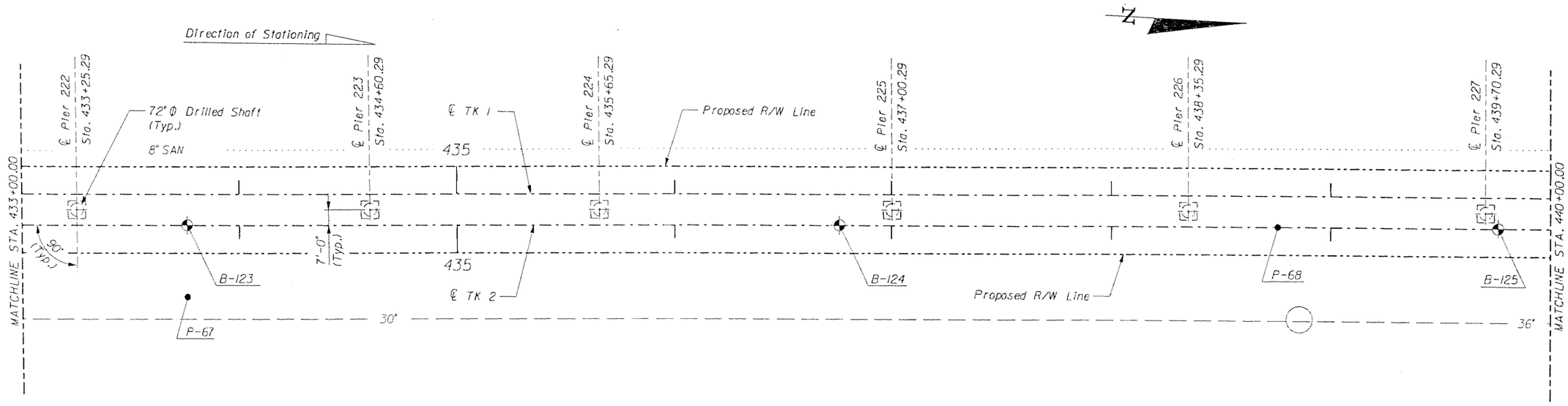

PLAN

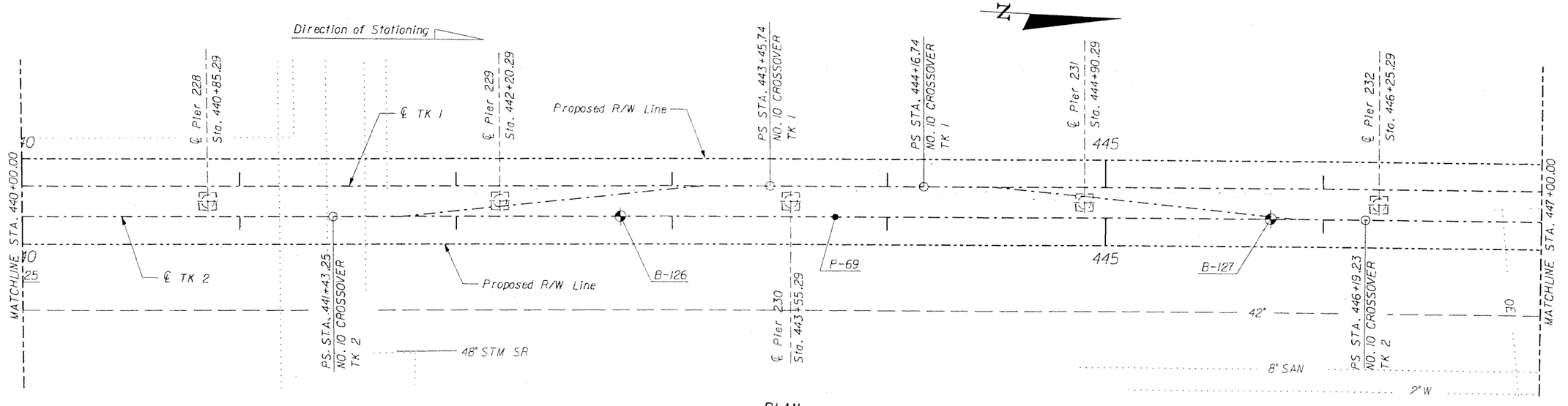

PLAN

NOTES:

1. For Horizontal Curve Data see, Trackway Plan and Profile Drawings.

GTH Designed by	1-Nov-05 Date				
jph Drawn by	5-May-06 Date				
JER Checked by	5-May-06 Date				
TWS Approved by	5-May-06 Date	No.	Date	By / Chk	App.	Revisions

NORTH CORRIDOR METRORAIL EXTENSION - PRELIMINARY ENGINEERING (100% SUBMITTAL)

SUBJECT TO CHANGE

STRUCTURES - GUIDEWAY (CONCRETE)

MIAMI-DADE COUNTY

MIAMI-DADE TRANSIT

PARSONS
7600 CORPORATE CENTER DRIVE, SUITE 500
MIAMI, FLORIDA 33126
PHONE: (786) 464-1000 FAX: (786) 845-7119
CERTIFICATE OF AUTHORIZATION NO. 1838

FOUNDATION LAYOUT 27

Approved / Date

Approved / Date

Scale 1" = 50' | Drawing SGC- 107 | Sheet 318

05/09/2006 05:54:27 PM g:\646331_north_corridor\cadd\dgn\new alignment\foundation-27.dgn

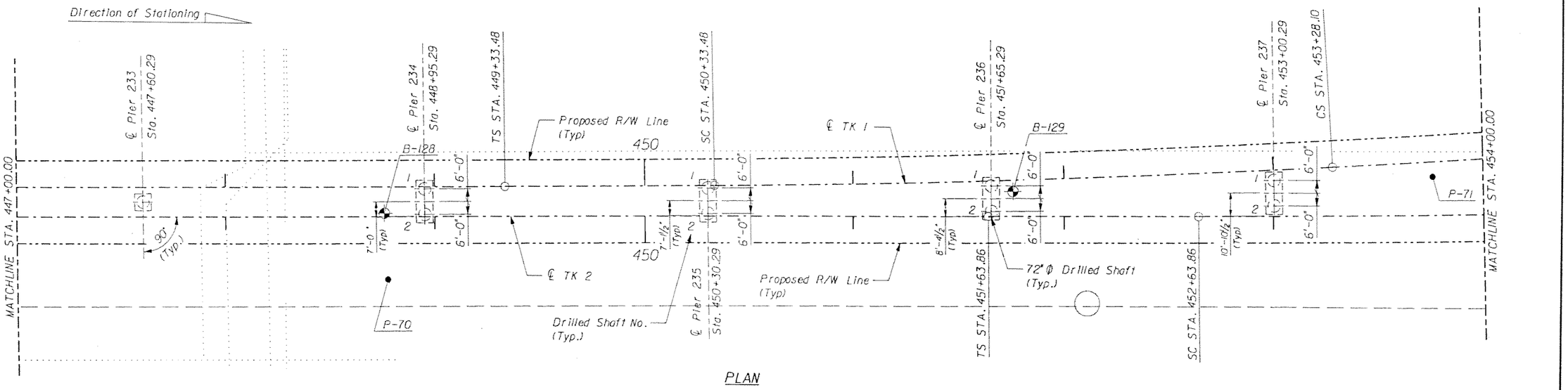

PLAN

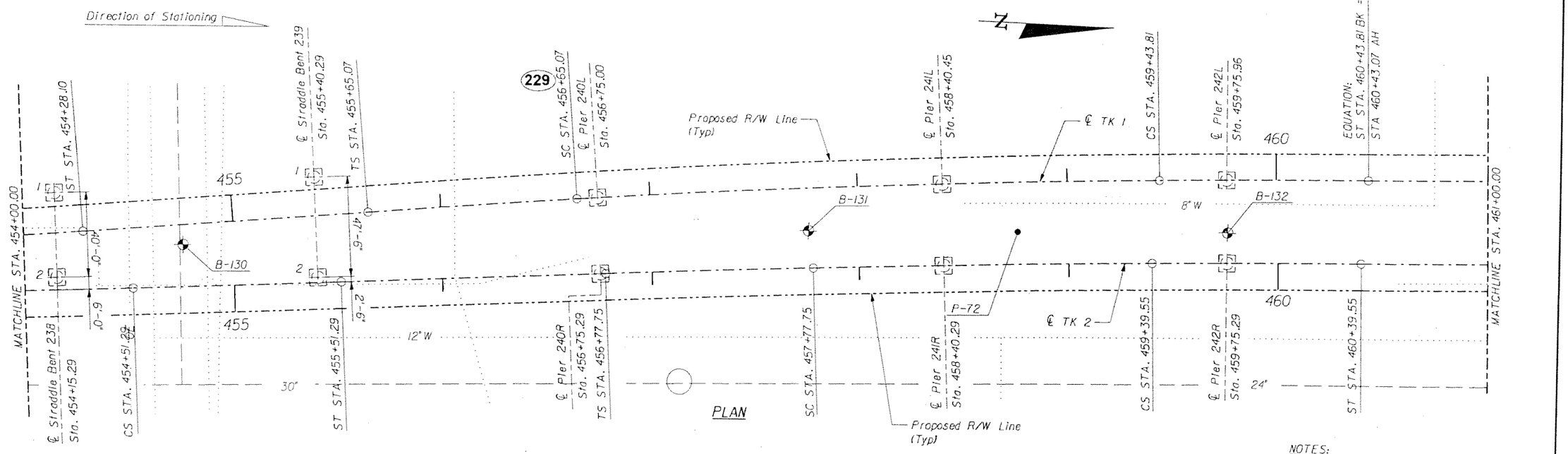

PLAN

NOTES:
1. For Horizontal Curve Data see, Trackway Plan and Profile Drawings.

SUBJECT TO CHANGE

GTH	1-Nov-05					
Designed by	Date					
jph	5-May-06					
Drawn by	Date					
JER	5-May-06					
Checked by	Date					
TWS	5-May-06					
Approved by	Date	No.	Date	By / Chk	App.	Revisions

NORTH CORRIDOR METRORAIL EXTENSION - PRELIMINARY ENGINEERING (100% SUBMITTAL)

STRUCTURES - GUIDEWAY (CONCRETE)

MIAMI-DADE COUNTY

MIAMI-DADE TRANSIT

PARSONS
7600 CORPORATE CENTER DRIVE, SUITE 500
MIAMI, FLORIDA 33126
PHONE: (786) 464-1000 FAX: (786) 845-7119
CERTIFICATE OF AUTHORIZATION NO. 1838

FOUNDATION LAYOUT 28

Approved / Date

Approved / Date

Scale 1" = 50' | Drawing SGC- 108 | Sheet 319

05/09/2006 05:54:29 PM g:\646331_north_corridor\cadd\dgn\new alignment\foundation-28.dgn

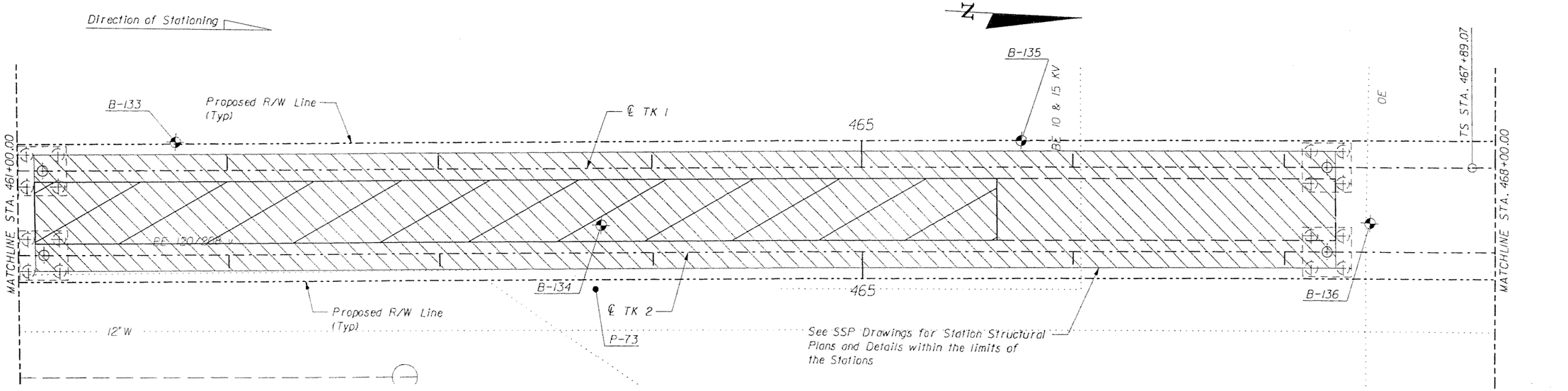

PLAN

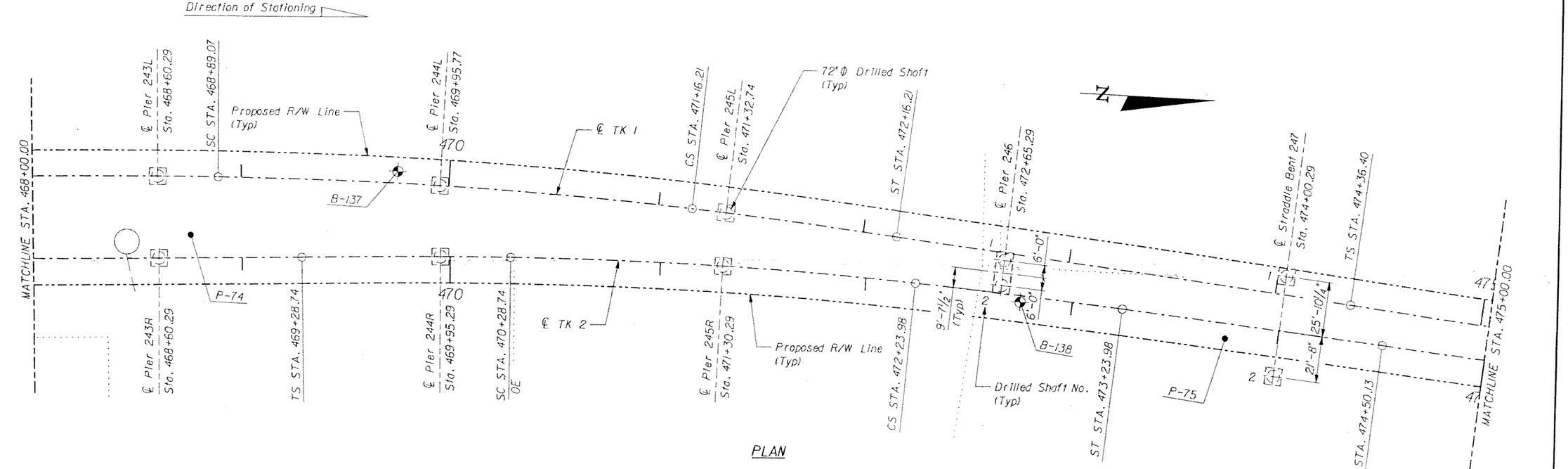

PLAN

NOTES:

1. For Horizontal Curve Data see, Trackway Plan and Profile Drawings.

GTH Designed by	1-Nov-05 Date					
jph Drawn by	5-May-06 Date					
JER Checked by	5-May-06 Date					
TWS Approved by	5-May-06 Date	No.	Date	By / Chk	App.	Revisions

SUBJECT TO CHANGE

NORTH CORRIDOR METRORAIL EXTENSION - PRELIMINARY ENGINEERING (100% SUBMITTAL)

STRUCTURES - GUIDEWAY (CONCRETE)

MIAMI-DADE COUNTY

MIAMI-DADE TRANSIT

PARSONS
7600 CORPORATE CENTER DRIVE, SUITE 500
MIAMI, FLORIDA 33126
PHONE: (786) 464-1000 FAX: (786) 845-7119
CERTIFICATE OF AUTHORIZATION NO. 1838

Approved | Date | Approved | Date

FOUNDATION LAYOUT 29

Scale 1" = 50' | Drawing SGC- 109 | Sheet 320

05/09/2006 05:54:34 PM g:\646331_north_corridor\cadd\dgn\new alignment\foundation-29.dgn

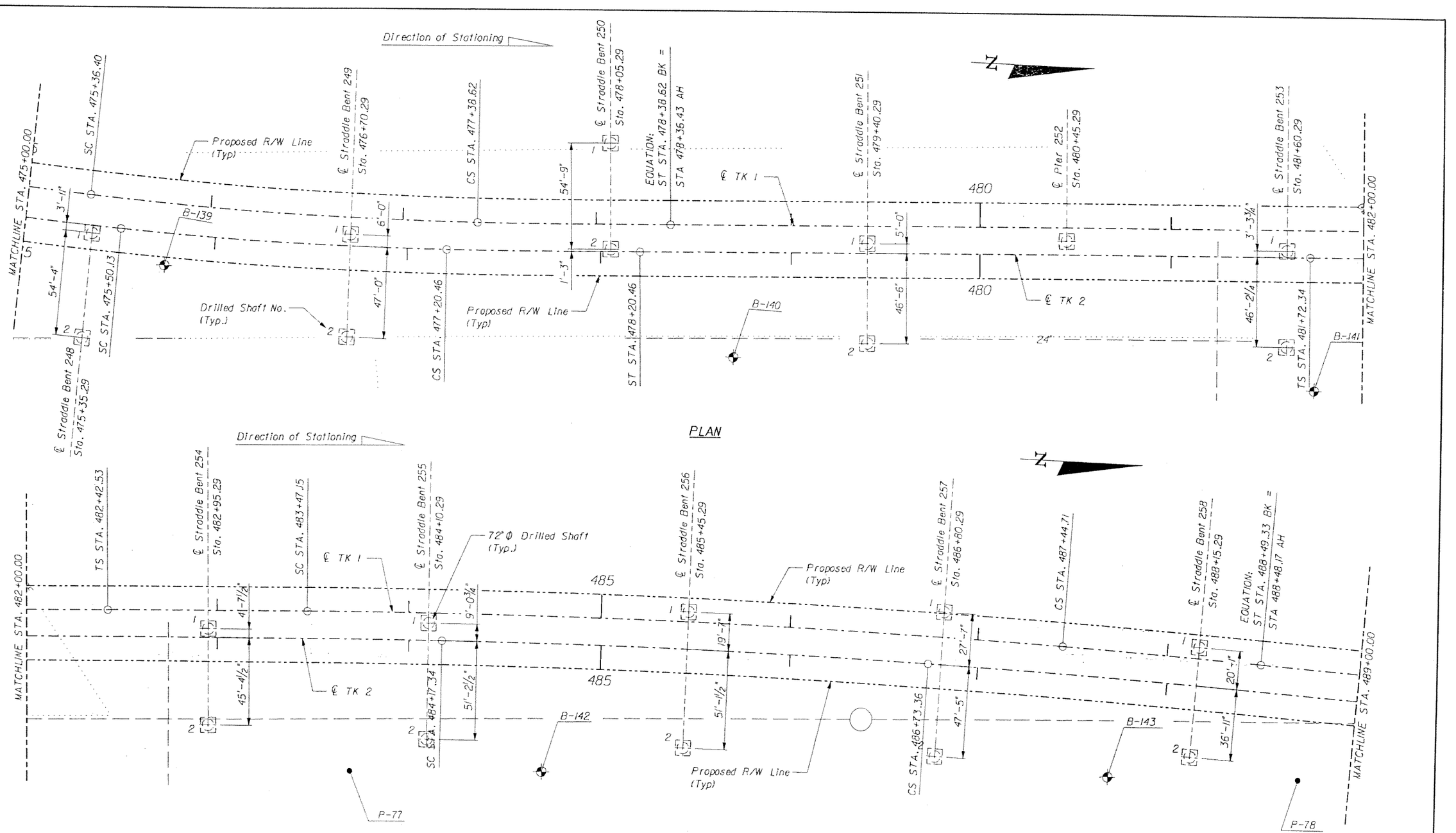

NOTES:

1. For Horizontal Curve Data see, Trackway Plan and Profile Drawings.

SUBJECT TO CHANGE

GTH	1-Nov-05					
jph	5-May-06					
JER	5-May-06					
TWS	5-May-06					
Approved by	Date	No.	Date	By / Chk	App.	Revisions

NORTH CORRIDOR METRORAIL EXTENSION - PRELIMINARY ENGINEERING (100% SUBMITTAL)

MIAMI-DADE COUNTY — MIAMI-DADE TRANSIT

PARSONS
7600 CORPORATE CENTER DRIVE, SUITE 500
MIAMI, FLORIDA 33126
PHONE: (786) 464-1000 FAX: (786) 845-7119
CERTIFICATE OF AUTHORIZATION NO. 1838

Approved | Date

Approved | Date

STRUCTURES - GUIDEWAY (CONCRETE)

FOUNDATION LAYOUT 30

Scale 1" = 50' | Drawing SGC- 110 | Sheet 321

05/09/2006 05:54:36 PM g:\646331_north_corridor\cadd\dgn\new alignment\foundation-30.dgn

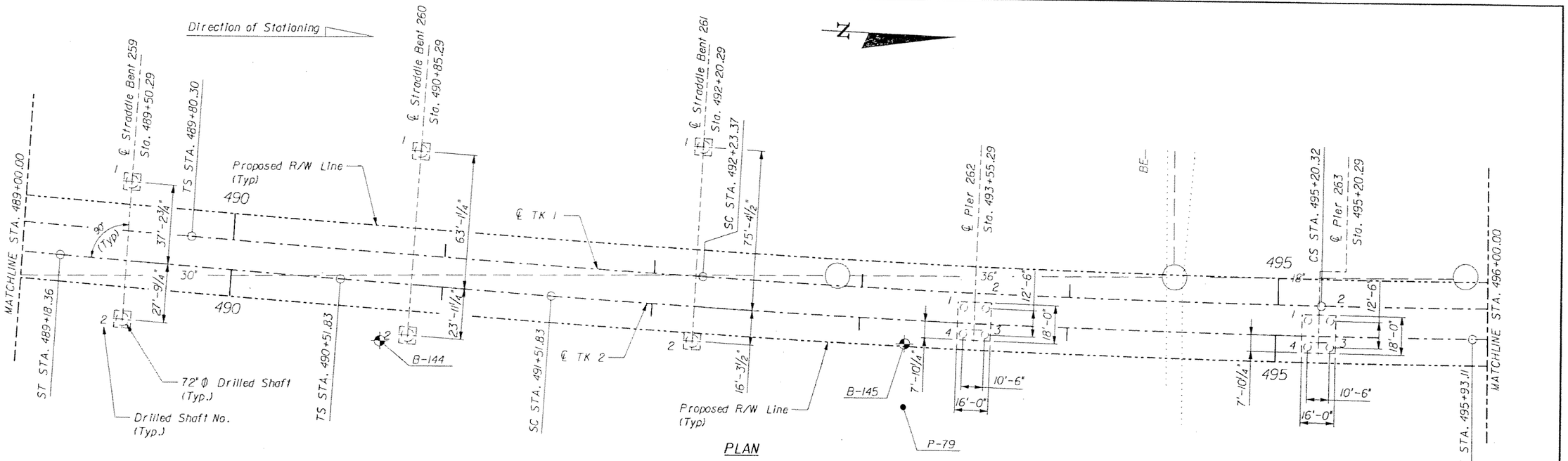

PLAN

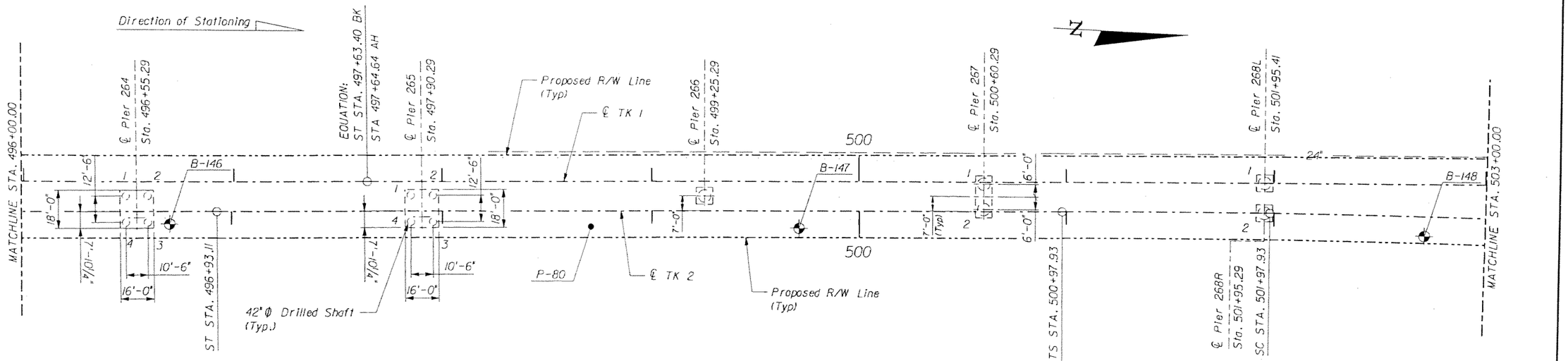

PLAN

NOTES:

1. For Horizontal Curve Data see, Trackway Plan and Profile Drawings.

SUBJECT TO CHANGE

GTH	1-Nov-05				
Designed by	Date				
jph	5-May-06				
Drawn by	Date				
JER	5-May-06				
Checked by	Date				
TWS	5-May-06				
Approved by	Date	No.	Date	By / Chk	App.	Revisions

NORTH CORRIDOR METRORAIL EXTENSION - PRELIMINARY ENGINEERING (100% SUBMITTAL)

STRUCTURES - GUIDEWAY (CONCRETE)

MIAMI-DADE COUNTY

MIAMI-DADE TRANSIT

PARSONS
7600 CORPORATE CENTER DRIVE, SUITE 500
MIAMI, FLORIDA 33126
PHONE: (786) 464-1000 FAX: (786) 845-7119
CERTIFICATE OF AUTHORIZATION NO. 1838

Approved | Date

Approved | Date

FOUNDATION LAYOUT 31

Scale 1" = 50' | Drawing SGC- 111 | Sheet 322

05/09/2006 05:54:39 PM g:\646331_north_corridor\cadd\dgn\new alignment\foundation-31.dgn

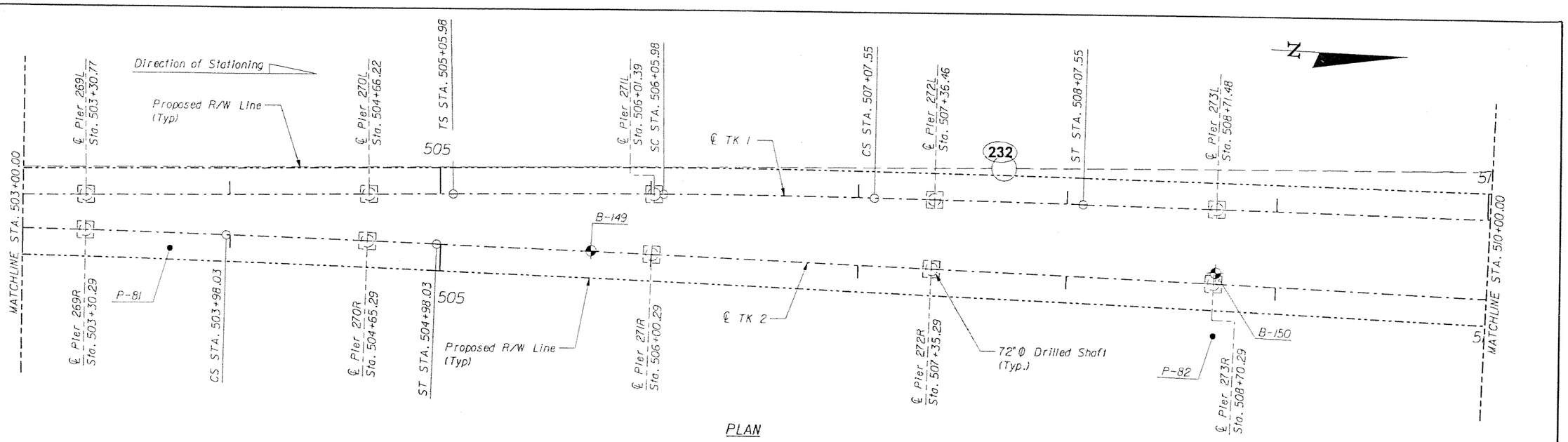

NOTES:
1. For Horizontal Curve Data see, Trackway Plan and Profile Drawings.

GTH	1-Nov-05					
Designed by	Date					
jph	5-May-06					
Drawn by	Date					
JER	5-May-06					
Checked by	Date					
TWS	5-May-06					
Approved by	Date	No.	Date	By / Chk	App.	Revisions

SUBJECT TO CHANGE

NORTH CORRIDOR METRORAIL EXTENSION - PRELIMINARY ENGINEERING (100% SUBMITTAL)

STRUCTURES - GUIDEWAY (CONCRETE)

MIAMI-DADE COUNTY

MIAMI-DADE TRANSIT

PARSONS
7600 CORPORATE CENTER DRIVE, SUITE 500
MIAMI, FLORIDA 33126
PHONE: (786) 464-1000 FAX: (786) 845-7119
CERTIFICATE OF AUTHORIZATION NO. 1838

FOUNDATION LAYOUT 32

Approved	Date	Approved	Date	Scale	Drawing	Sheet
				1" = 50'	SGC- 112	323

05/09/2006 06:16:18 PM G:\546331_North_Corridor\CADD\Dgn\New Alignment\FOUNDATION-32.dgn

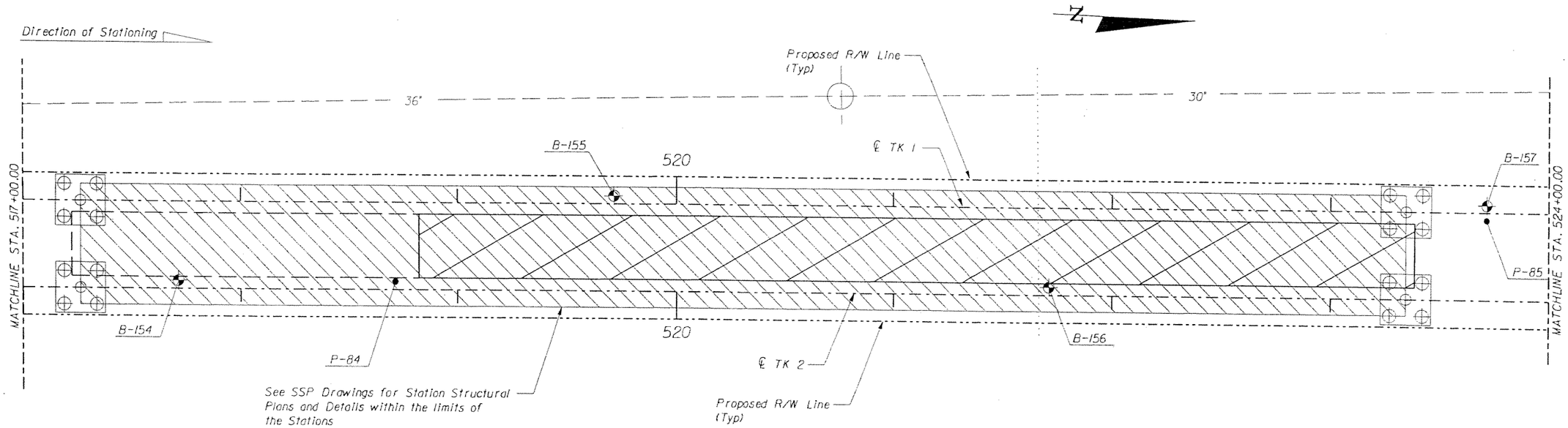

PLAN

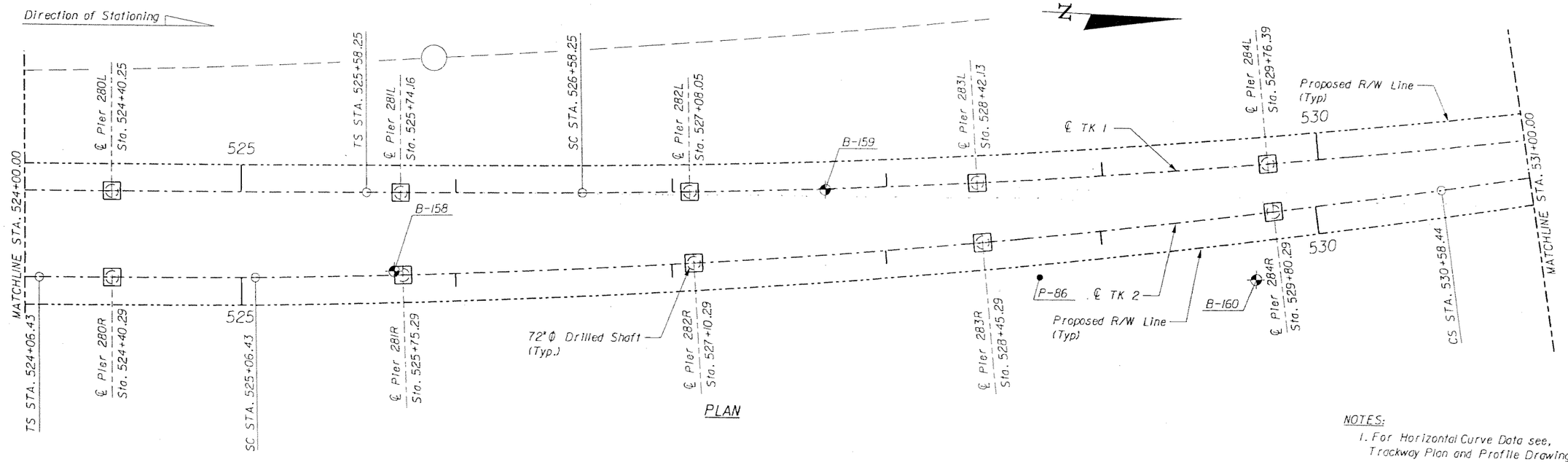

PLAN

NOTES:

1. For Horizontal Curve Data see, Trackway Plan and Profile Drawings.

SUBJECT TO CHANGE

GTH	1-Nov-05					
Designed by	Date					
DEP	5-May-06					
Drawn by	Date					
JER	5-May-06					
Checked by	Date					
TWS	5-May-06					
Approved by	Date	No.	Date	By / Chk	App.	Revisions

NORTH CORRIDOR METRORAIL EXTENSION - PRELIMINARY ENGINEERING (100% SUBMITTAL)

STRUCTURES - GUIDEWAY (CONCRETE)

MIAMI-DADE COUNTY

MIAMI-DADE TRANSIT

PARSONS
7600 CORPORATE CENTER DRIVE, SUITE 500
MIAMI, FLORIDA 33126
PHONE: (786) 464-1000 FAX: (786) 845-7119
CERTIFICATE OF AUTHORIZATION NO. 1838

FOUNDATION LAYOUT 33

Approved	Date	Approved	Date	Scale	Drawing	Sheet
				1" = 50'	SGC- 113	324

5/9/2006 4:52:47 PM g:\646331_north_corridor\cadd\dgn\new alignment\foundation-33.dgn

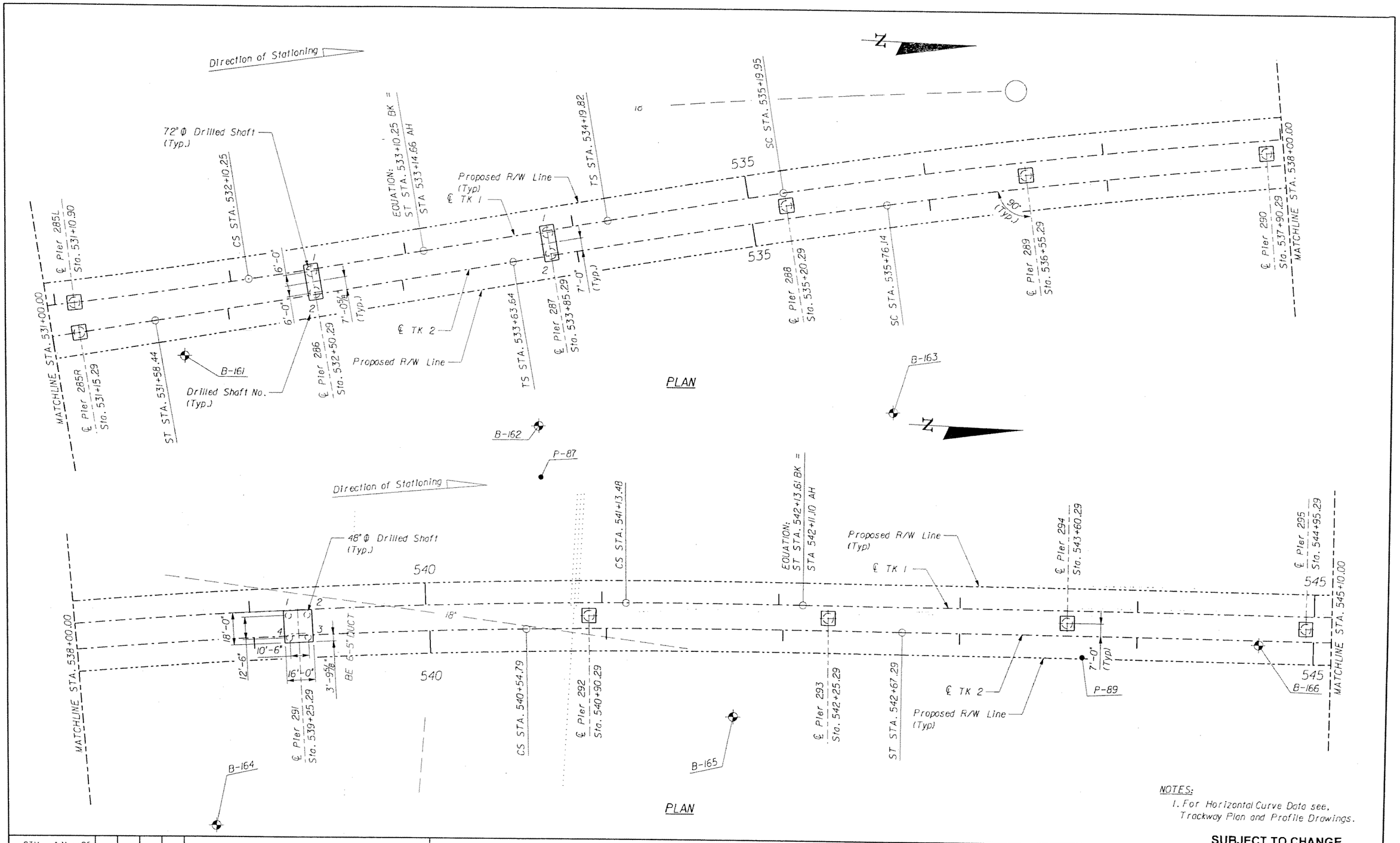

NOTES:
1. For Horizontal Curve Data see, Trackway Plan and Profile Drawings.

SUBJECT TO CHANGE

GTH Designed by	1-Nov-05 Date					
DEP Drawn by	5-May-06 Date					
JER Checked by	5-May-06 Date					
TWS Approved by	5-May-06 Date	No.	Date	By / Chk	App.	Revisions

NORTH CORRIDOR METRORAIL EXTENSION - PRELIMINARY ENGINEERING (100% SUBMITTAL)

STRUCTURES - GUIDEWAY (CONCRETE)

MIAMI-DADE COUNTY — MIAMI-DADE TRANSIT

PARSONS
7600 CORPORATE CENTER DRIVE, SUITE 500
MIAMI, FLORIDA 33126
PHONE: (786) 464-1000 FAX: (786) 845-7119
CERTIFICATE OF AUTHORIZATION NO. 1638

FOUNDATION LAYOUT 34

Approved / Date — Approved / Date

Scale 1"=50' | Drawing SGC- 114 | Sheet 325

05/09/2006 05:54:45 PM g:\646331_north_corridor\cadd\dgn\new alignment\foundation-34.dgn

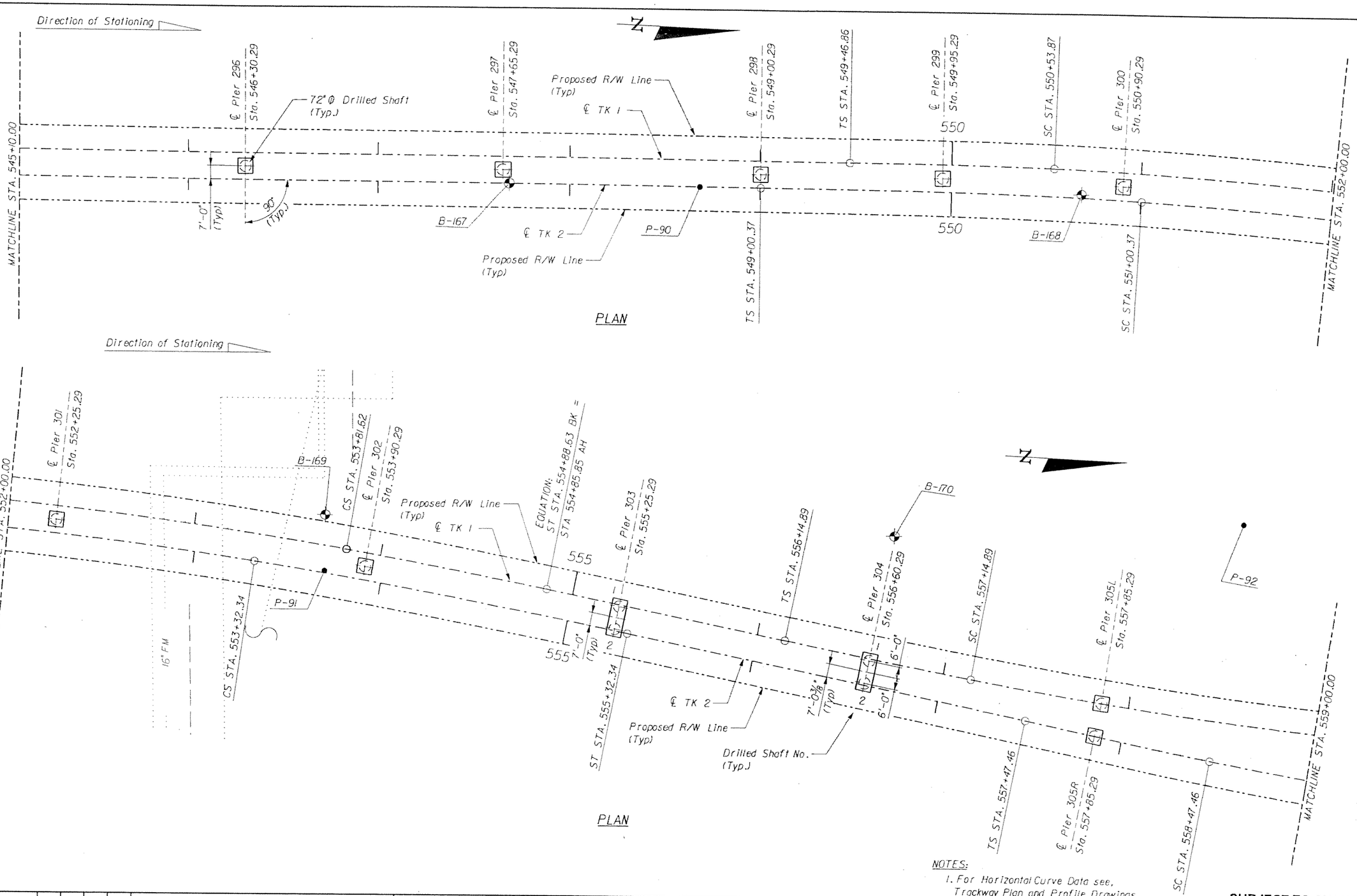

GTH Designed by	1-Nov-05 Date					
DEP Drawn by	5-May-06 Date					
JER Checked by	5-May-06 Date					
TWS Approved by	5-May-06 Date	No.	Date	By / Chk	App.	Revisions

NORTH CORRIDOR METRORAIL EXTENSION - PRELIMINARY ENGINEERING (100% SUBMITTAL)

SUBJECT TO CHANGE

MIAMI-DADE COUNTY

MIAMI-DADE TRANSIT

PARSONS
7600 CORPORATE CENTER DRIVE, SUITE 500
MIAMI, FLORIDA 33126
PHONE: (786) 464-1000 FAX: (786) 845-7119
CERTIFICATE OF AUTHORIZATION NO. 1838

Approved | Date

Approved | Date

STRUCTURES - GUIDEWAY (CONCRETE)

FOUNDATION LAYOUT 35

Scale 1" = 50' | Drawing SGC- 115 | Sheet 326

5/9/2006 4:52:54 PM g:\646331_north_corridor\cadd\dgn\new alignment\foundation-35.dgn

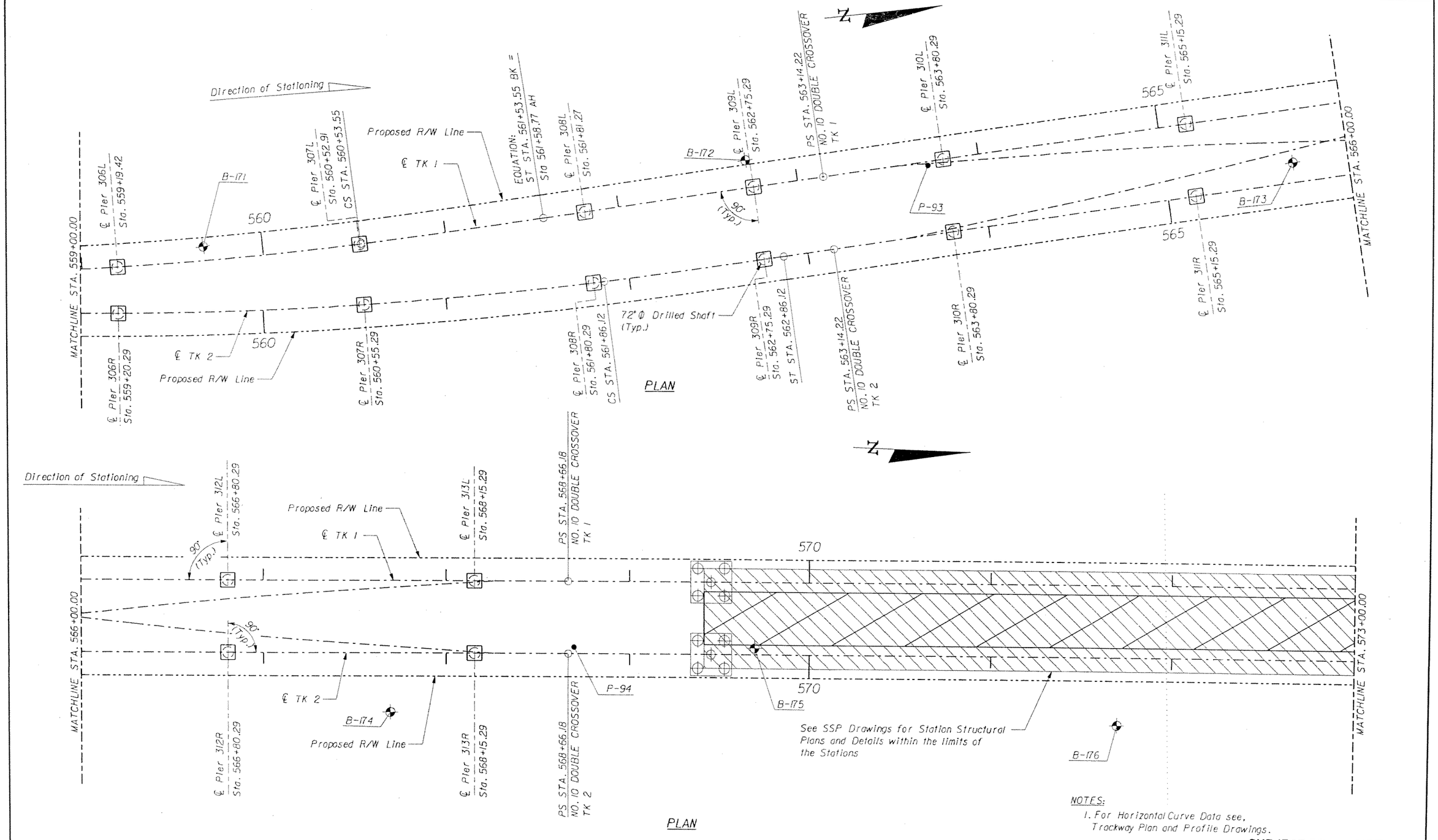

NOTES:

1. For Horizontal Curve Data see, Trackway Plan and Profile Drawings.

SUBJECT TO CHANGE

GTH Designed by	1-Nov-05 Date					
DEP Drawn by	5-May-06 Date					
JER Checked by	5-May-06 Date					
TWS Approved by	5-May-06 Date	No.	Date	By / Chk	App.	Revisions

NORTH CORRIDOR METRORAIL EXTENSION - PRELIMINARY ENGINEERING (100% SUBMITTAL)

STRUCTURES - GUIDEWAY (CONCRETE)

MIAMI-DADE COUNTY

MIAMI-DADE TRANSIT

PARSONS
7600 CORPORATE CENTER DRIVE, SUITE 500
MIAMI, FLORIDA 33126
PHONE: (786) 464-1000 FAX: (786) 845-7119
CERTIFICATE OF AUTHORIZATION NO. 1836

FOUNDATION LAYOUT 36

Approved | Date | Approved | Date

Scale 1" = 50' | Drawing SGC- 116 | Sheet 327

5/9/2006 4:52:58 PM p:\646331_north_corridor\caddd\dgn\new alignment\foundation-36.dgn

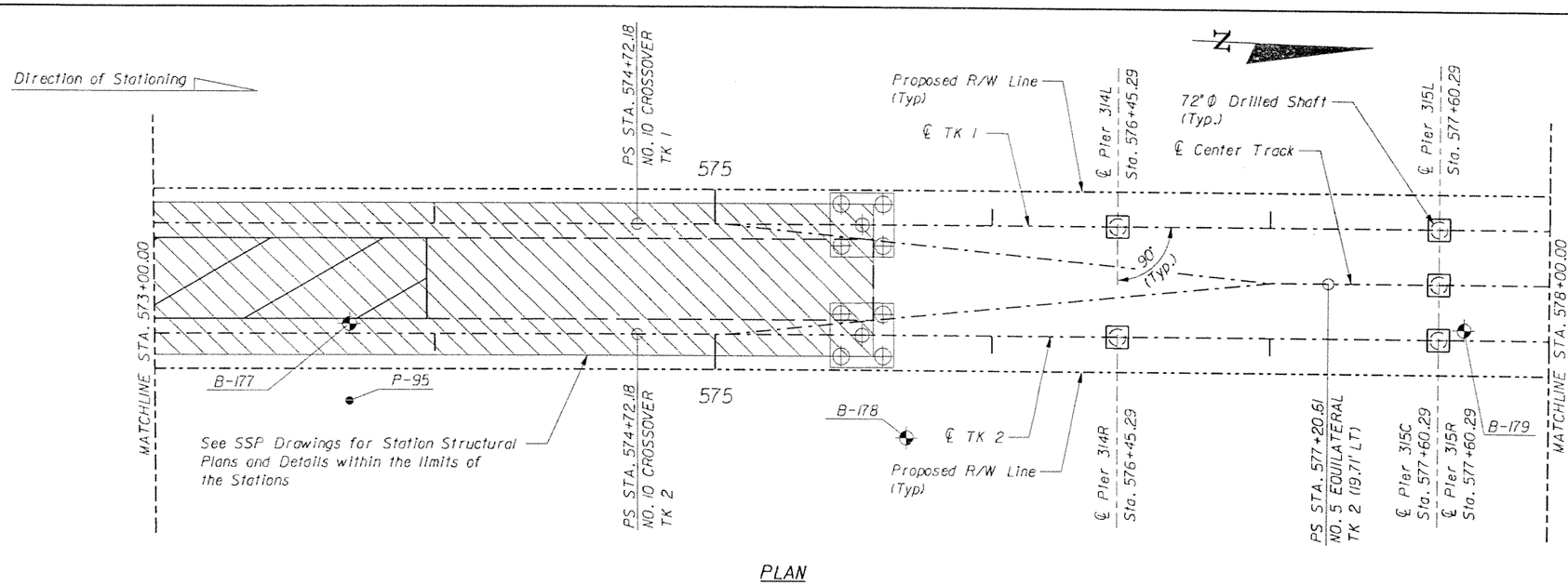

PLAN

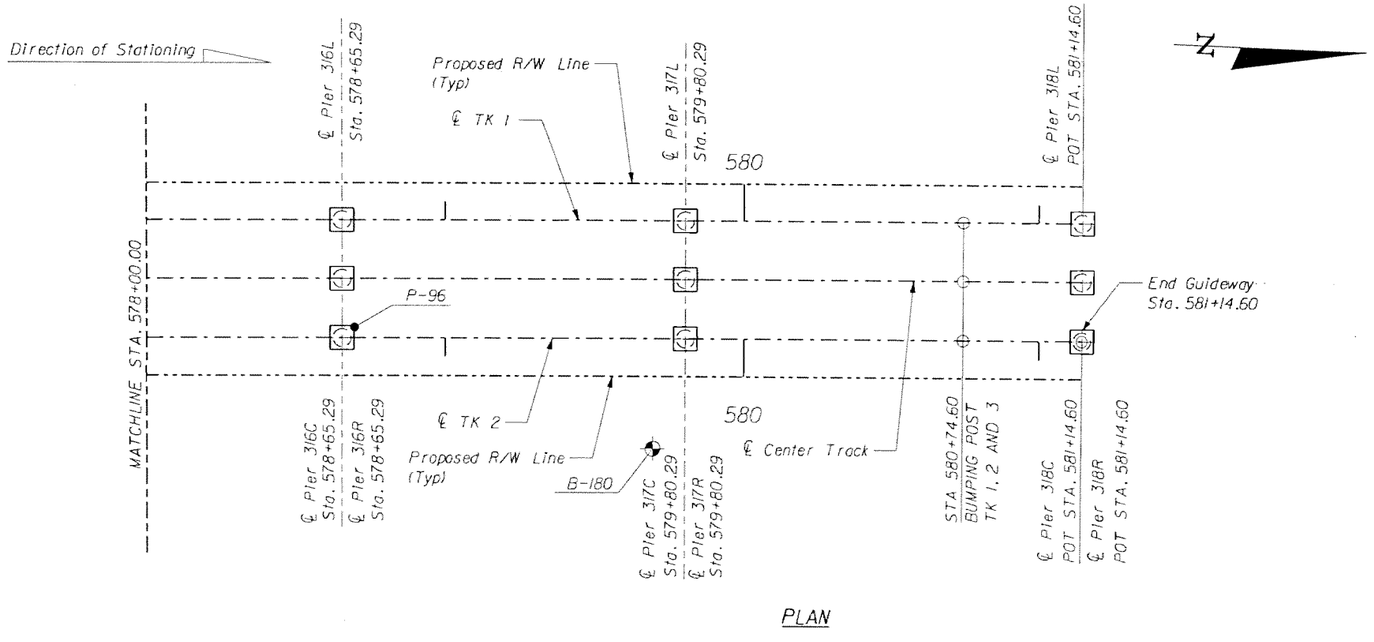

PLAN

NOTES:

1. For Horizontal Curve Data see, Trackway Plan and Profile Drawings.

GTH Designed by	1-Nov-05 Date				
DEP Drawn by	5-May-06 Date				
JER Checked by	5-May-06 Date				
TWS Approved by	5-May-06 Date	No.	Date	By / Chk.	App.	Revisions

NORTH CORRIDOR METRORAIL EXTENSION - PRELIMINARY ENGINEERING (100% SUBMITTAL)

SUBJECT TO CHANGE

STRUCTURES - GUIDEWAY (CONCRETE)

MIAMI-DADE COUNTY

MIAMI-DADE TRANSIT

PARSONS
7600 CORPORATE CENTER DRIVE, SUITE 500
MIAMI, FLORIDA 33126
PHONE: (786) 454-1000 FAX: (786) 845-7119
CERTIFICATE OF AUTHORIZATION NO. 1838

Approved / Date

Approved / Date

FOUNDATION LAYOUT 37

Scale 1"=50' | Drawing SGC- 117 | Sheet 328

5/9/2006 4:52:58 PM g:\846331_north_corridor\cadd\dgn\new alignment\foundation-37.dgn

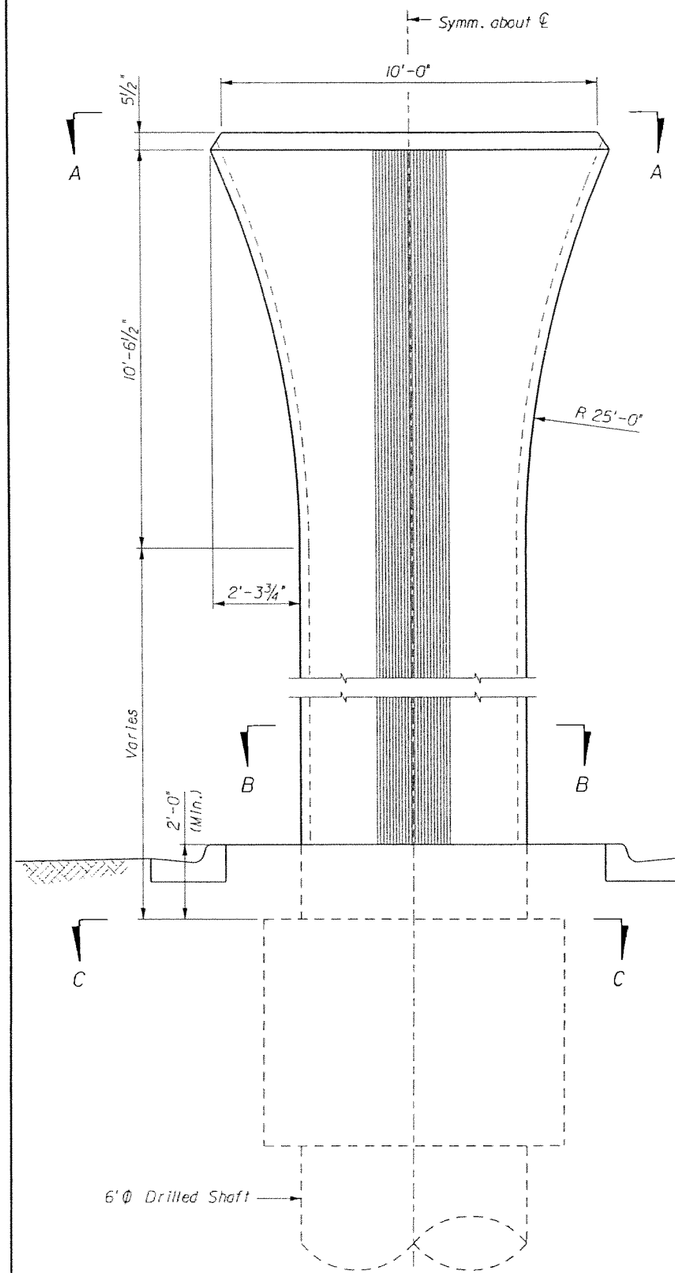

CROSS-SECTION

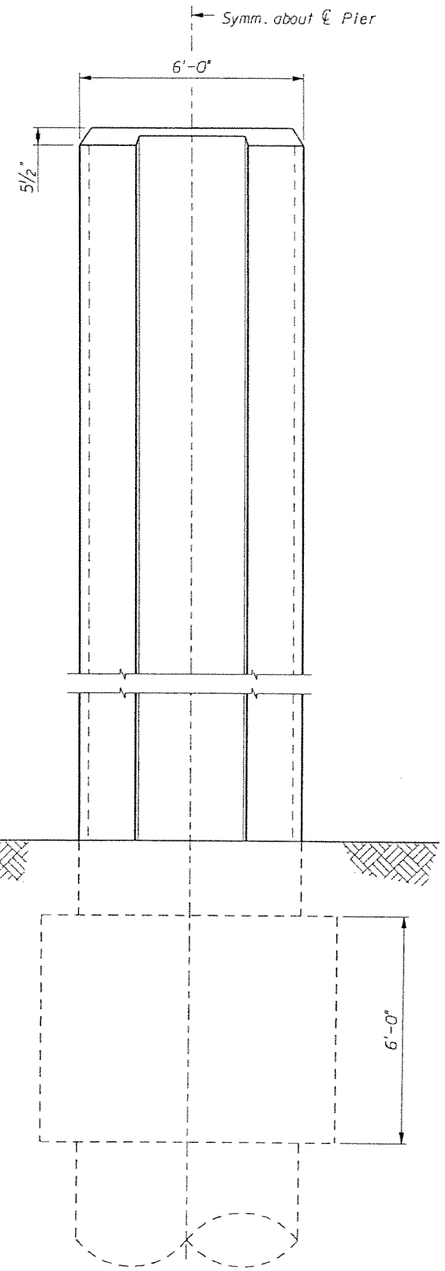

SIDE VIEW

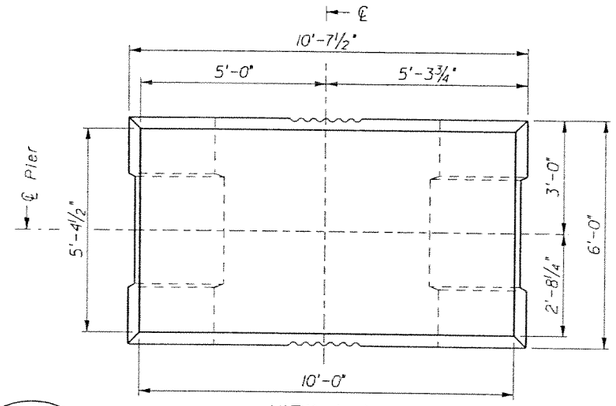

VIEW A-A

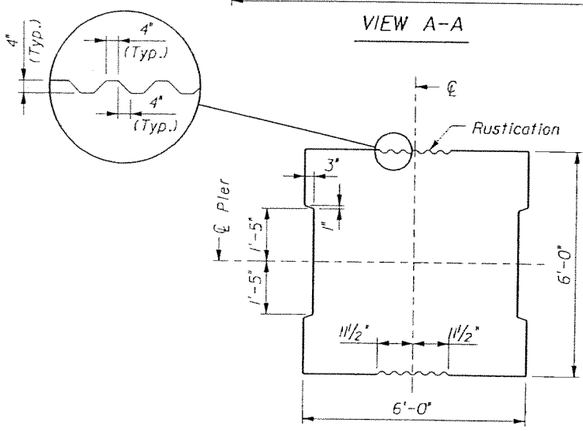

SECTION B-B

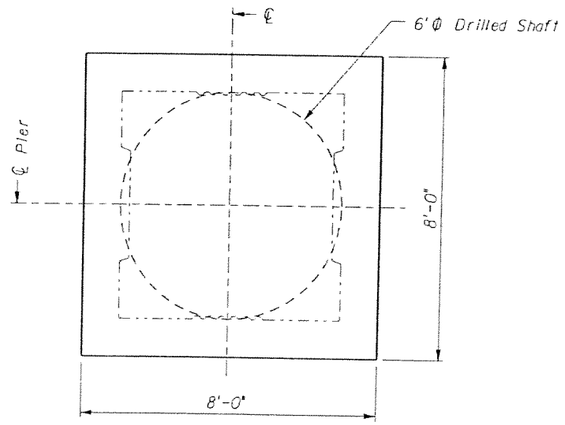

SECTION C-C

GTH	1-Nov-05					
Designed by	Date					
JLS	5-May-06					
Drawn by	Date					
JER	5-May-06					
Checked by	Date					
TWS	5-May-06					
Approved by	Date	No.	Date	By / Chk	App.	Revisions

NORTH CORRIDOR METRORAIL EXTENSION - PRELIMINARY ENGINEERING (100% SUBMITTAL)

SUBJECT TO CHANGE

STRUCTURES - GUIDEWAY (CONCRETE)

MIAMI-DADE COUNTY

MIAMI-DADE TRANSIT

PARSONS
7600 CORPORATE CENTER DRIVE, SUITE 500
MIAMI, FLORIDA 33126
PHONE: (786) 464-1000 FAX: (786) 845-7119
CERTIFICATE OF AUTHORIZATION NO. 1838

Approved | Date

Approved | Date

TYPE 1 PIER DIMENSIONS

Scale NTS | Drawing SGC- 118 | Sheet 329

5/8/2006 5:11:38 PM g:\646331_north_corridor\cadd\substpierdims_1.dgn

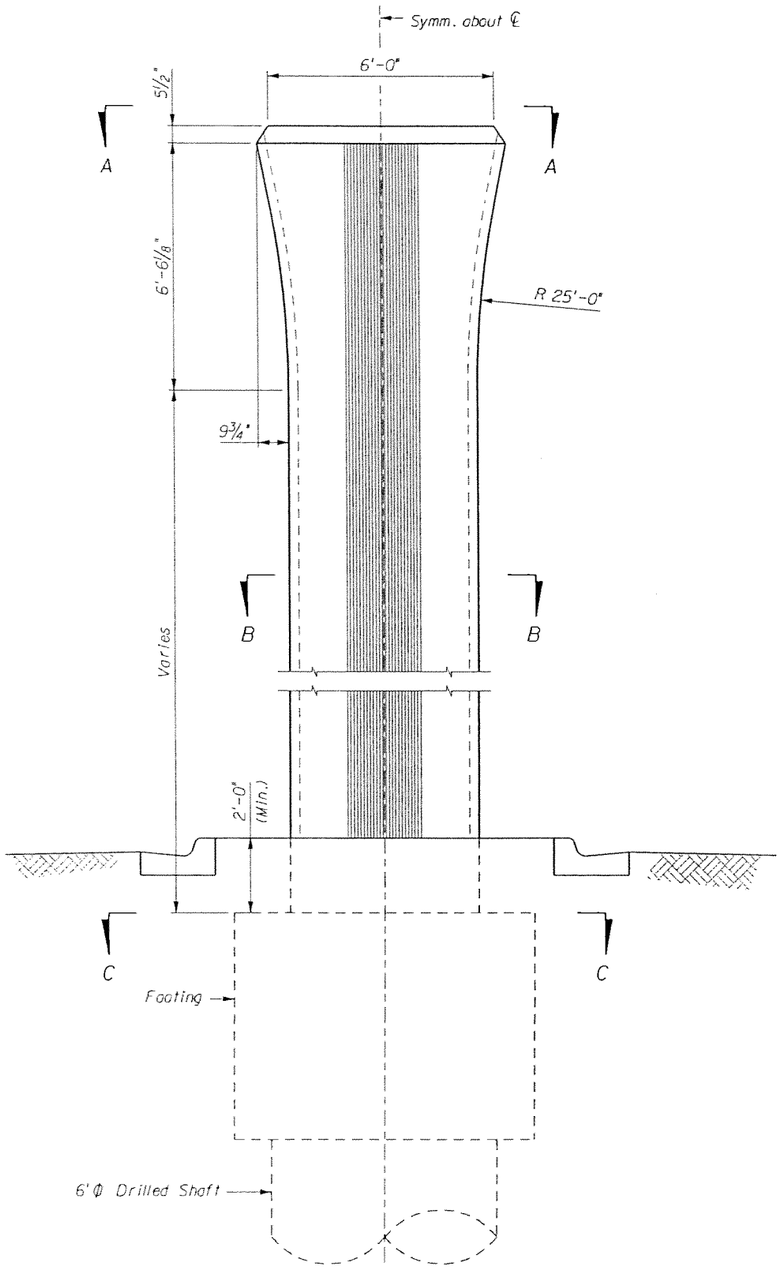

CROSS-SECTION

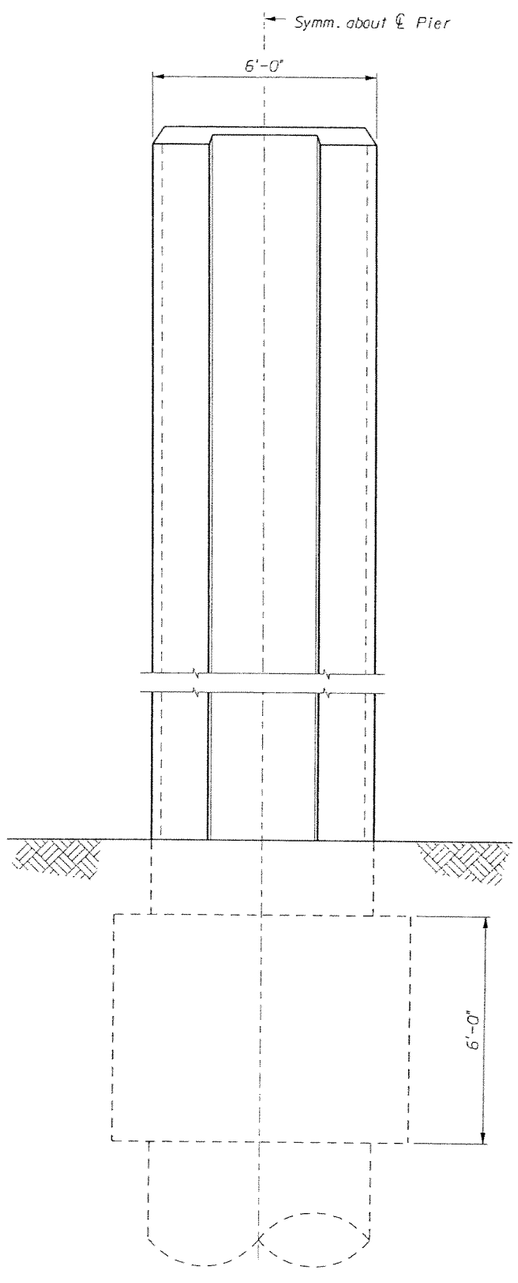

SIDE VIEW

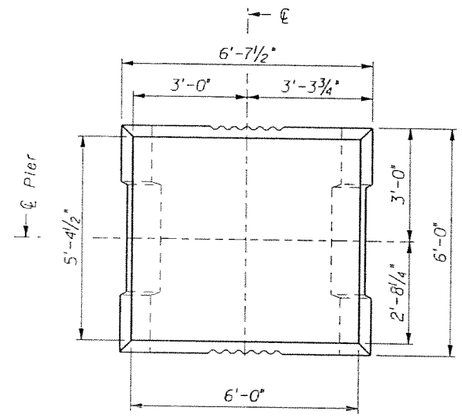

VIEW A-A

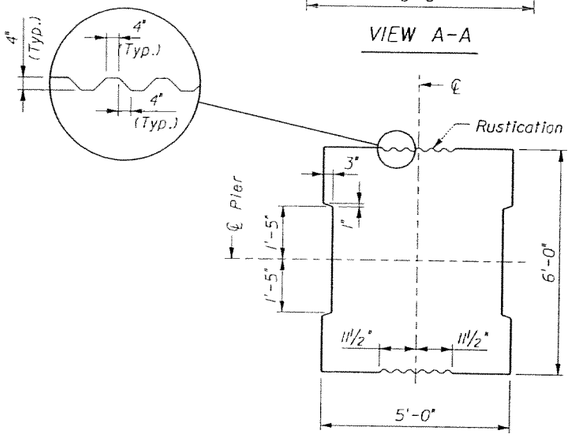

SECTION B-B

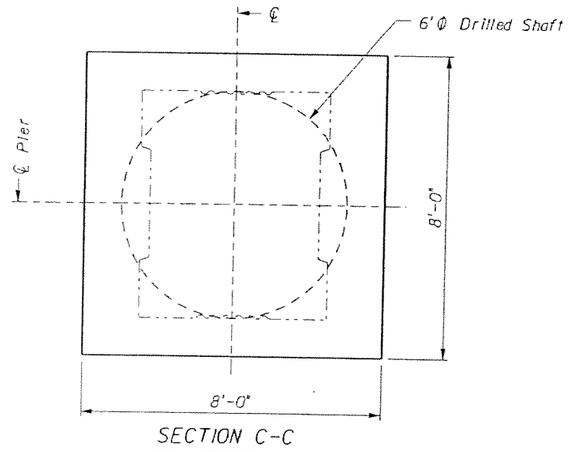

SECTION C-C

SUBJECT TO CHANGE

GTH Designed by	1-Nov-05 Date					
JLS Drawn by	5-May-06 Date					
JER Checked by	5-May-06 Date					
TWS Approved by	5-May-06 Date	No.	Date	By / Chk	App.	Revisions

NORTH CORRIDOR METRORAIL EXTENSION - PRELIMINARY ENGINEERING (100% SUBMITTAL)

STRUCTURES - GUIDEWAY (CONCRETE)

MIAMI-DADE COUNTY

MIAMI-DADE TRANSIT

PARSONS
7600 CORPORATE CENTER DRIVE, SUITE 500
MIAMI, FLORIDA 33126
PHONE: (786) 464-1000 FAX: (786) 845-7119
CERTIFICATE OF AUTHORIZATION NO. 1838

TYPE 2 PIER DIMENSIONS

Approved	Date	Approved	Date	Scale	Drawing	Sheet
				NTS	SGC- 119	330

5/8/2006 6:11:39 PM g:\046331_north_corridor\cadd\subst\pierdims_2.dgn

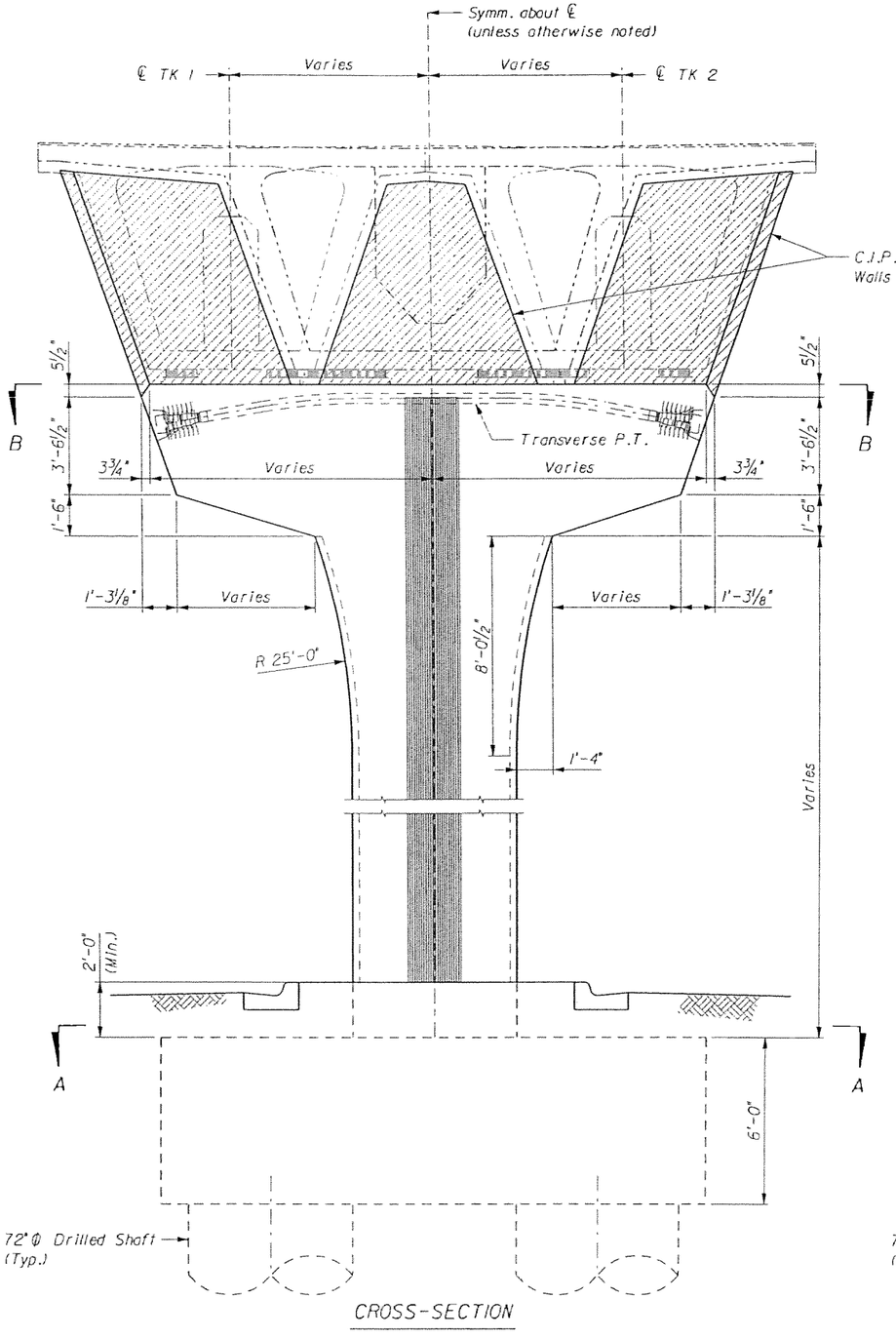

CROSS-SECTION

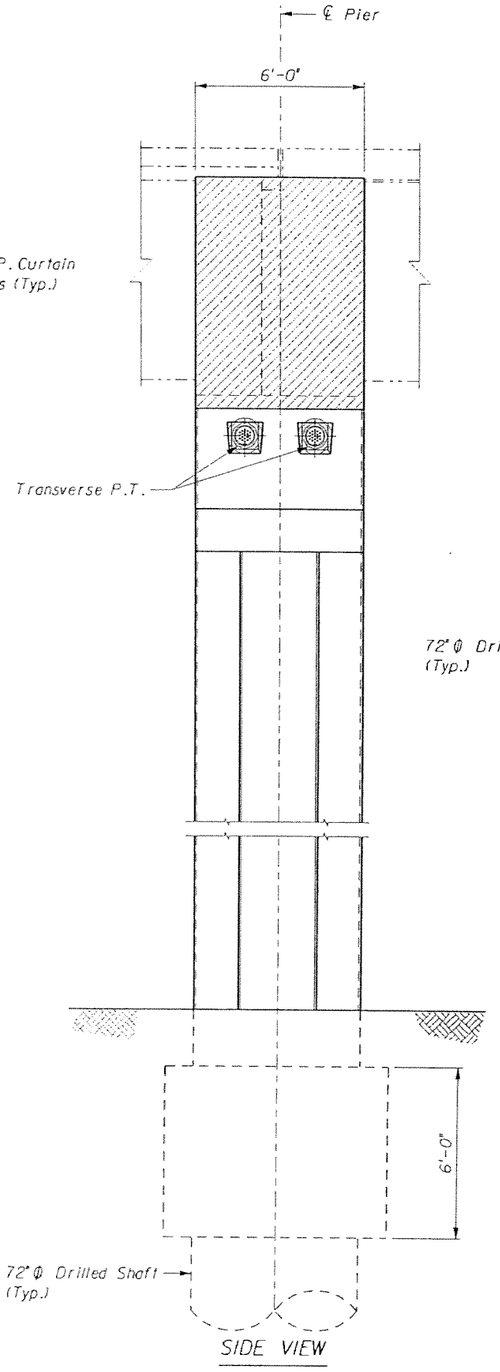

SIDE VIEW

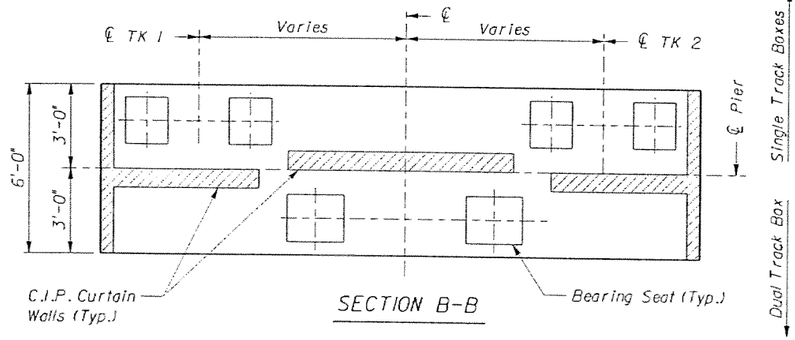

SECTION B-B

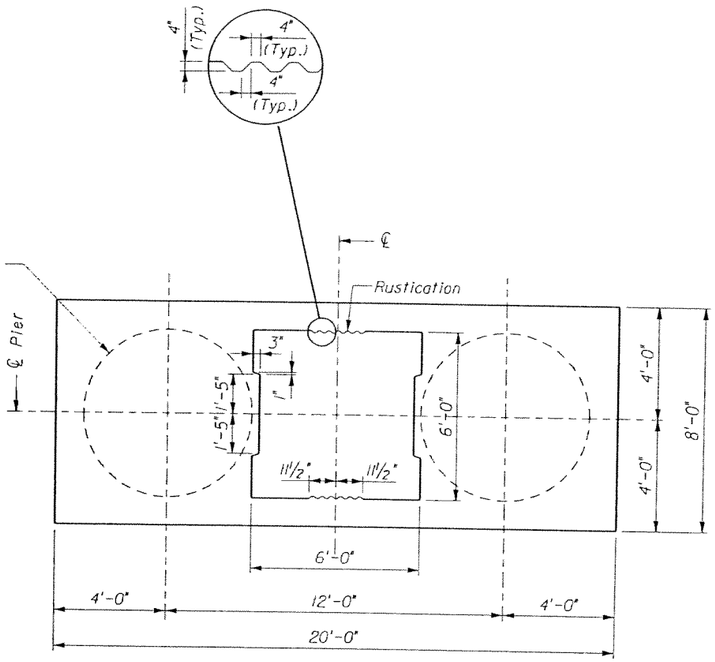

SECTION A-A

THIS DRAWING APPLIES TO:

Pier No.		
45	164	287
68	191	303
100	234	
138	267	

SUBJECT TO CHANGE

GTH	1-Nov-05						
Designed by	Date						
JLS	5-May-06						
Drawn by	Date						
JER	5-May-06						
Checked by	Date						
TWS	5-May-06						
Approved by	Date	No.	Date	By / Chk	App.	Revisions	

NORTH CORRIDOR METRORAIL EXTENSION - PRELIMINARY ENGINEERING (100% SUBMITTAL)

MIAMI-DADE COUNTY

MIAMI-DADE TRANSIT

PARSONS
7600 CORPORATE CENTER DRIVE, SUITE 500
MIAMI, FLORIDA 33126
PHONE: (786) 464-1000 FAX: (786) 845-7119
CERTIFICATE OF AUTHORIZATION NO. 1838

Approved	Date	Approved	Date

STRUCTURES - GUIDEWAY (CONCRETE)

TRANSITION PIER DIMENSIONS

Scale	Drawing	Sheet
NTS	SGC-120	331

5/8/2006 8:11:40 PM g:\648331_north_corridor\cadd\subst\trans pier type 1.dgn

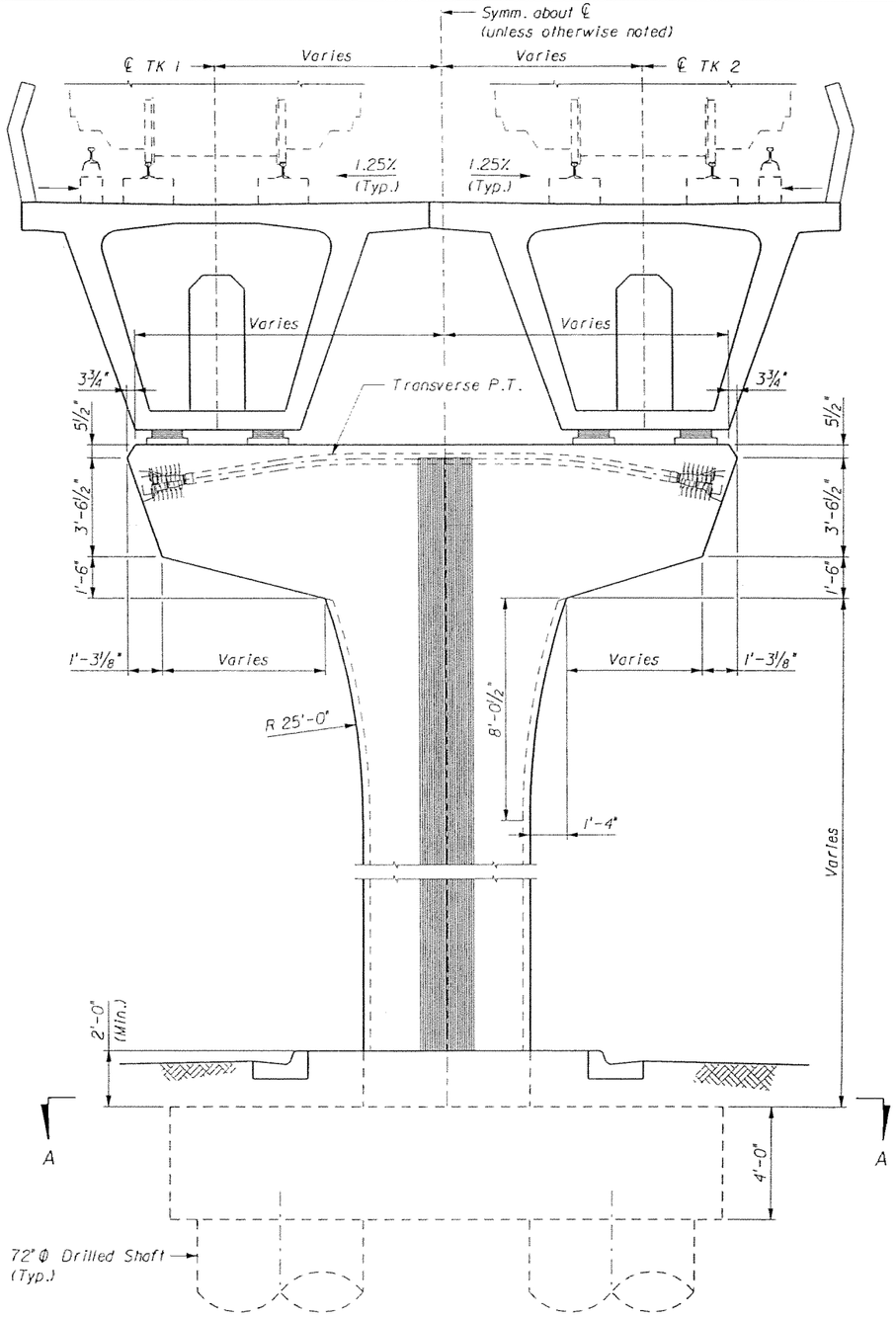

CROSS-SECTION

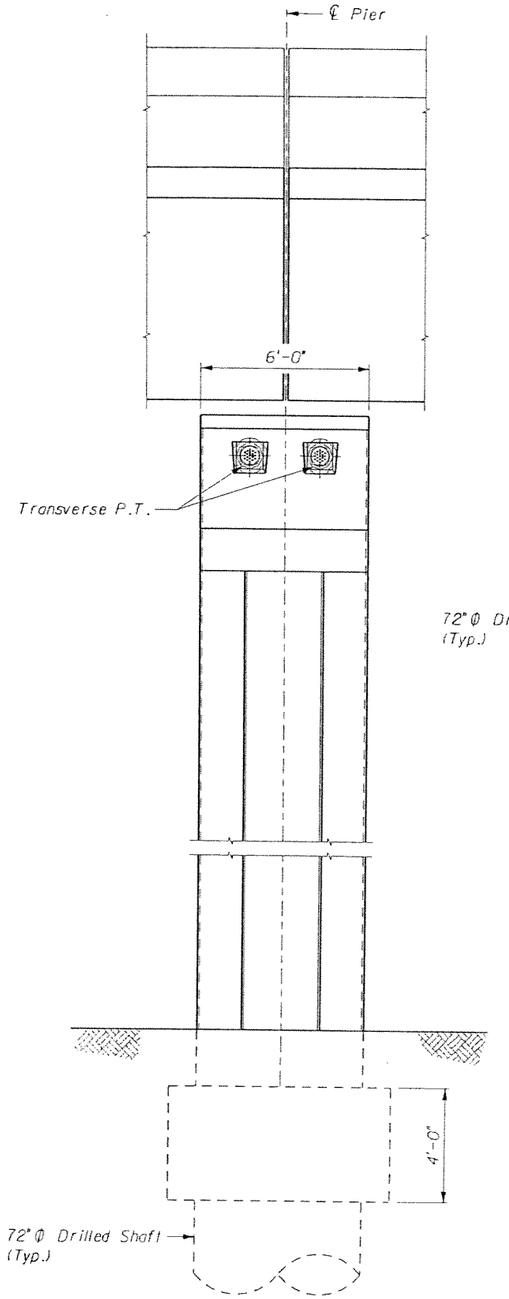

SIDE VIEW

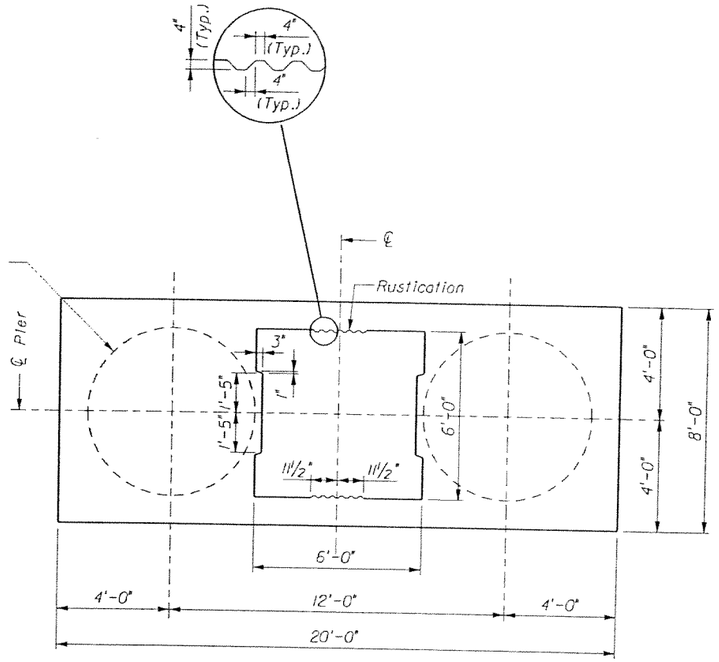

SECTION A-A

THIS DRAWING APPLIES TO:

Pier No.		
67	236	304
163	237	
204	246	
235	286	

SUBJECT TO CHANGE

GTH	1-Nov-05						
Designed by	Date						
JLS	5-May-06						
Drawn by	Date						
JER	5-May-06						
Checked by	Date						
TWS	5-May-06						
Approved by	Date	No.	Date	By / Chk	App.	Revisions	

NORTH CORRIDOR METRORAIL EXTENSION - PRELIMINARY ENGINEERING (100% SUBMITTAL)

MIAMI-DADE COUNTY

MIAMI-DADE TRANSIT

PARSONS
7600 CORPORATE CENTER DRIVE, SUITE 500
MIAMI, FLORIDA 33126
PHONE: (786) 464-1000 FAX: (786) 845-7119
CERTIFICATE OF AUTHORIZATION NO. 1838

Approved | Date | Approved | Date

STRUCTURES - GUIDEWAY (CONCRETE)

T - PIER DIMENSIONS

Scale NTS | Drawing SGC- 121 | Sheet 332

5/8/2006 6:11:42 PM g:\646331_north_corridor\caddfaubsN\ pier type 1.dgn

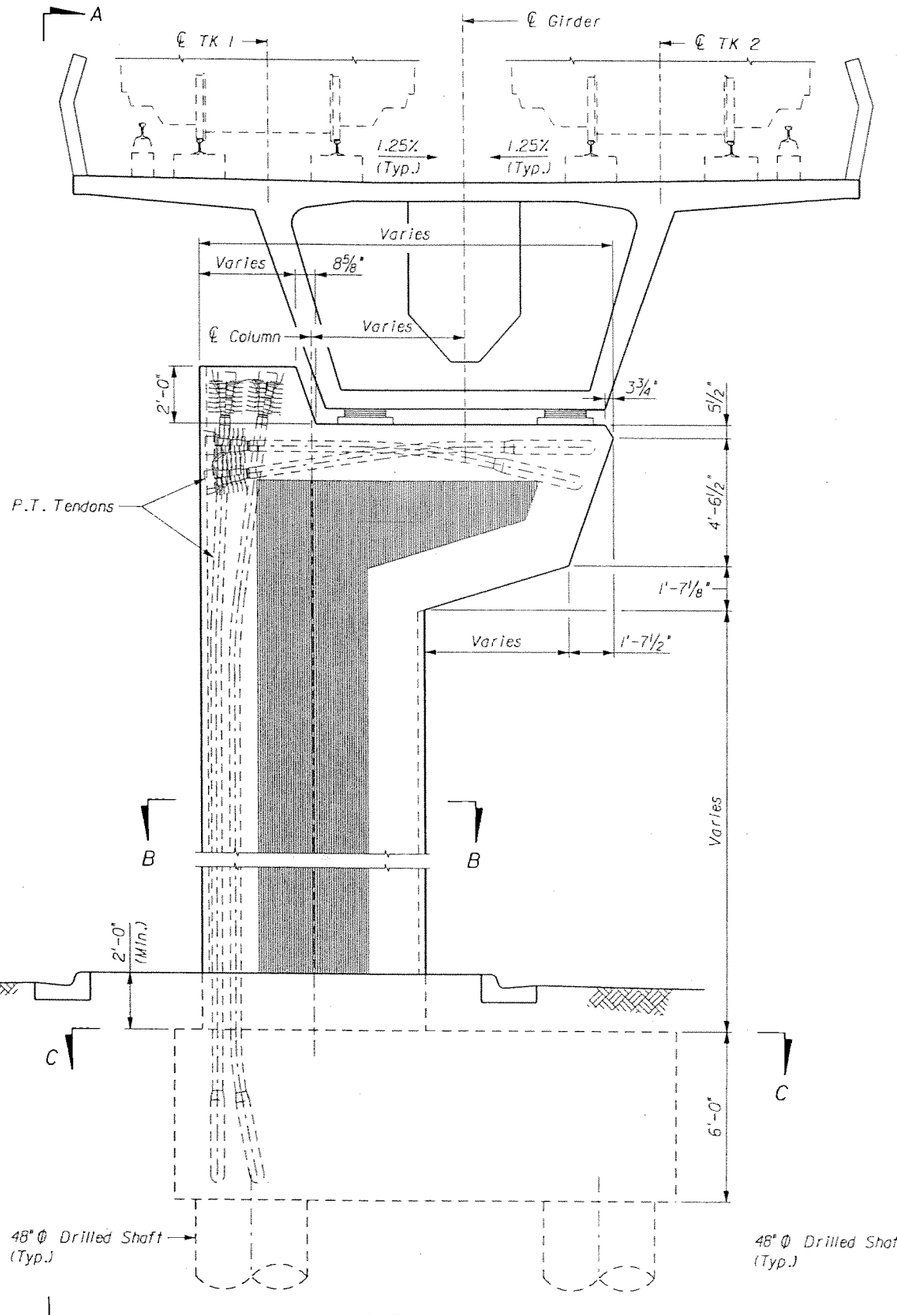

CROSS-SECTION

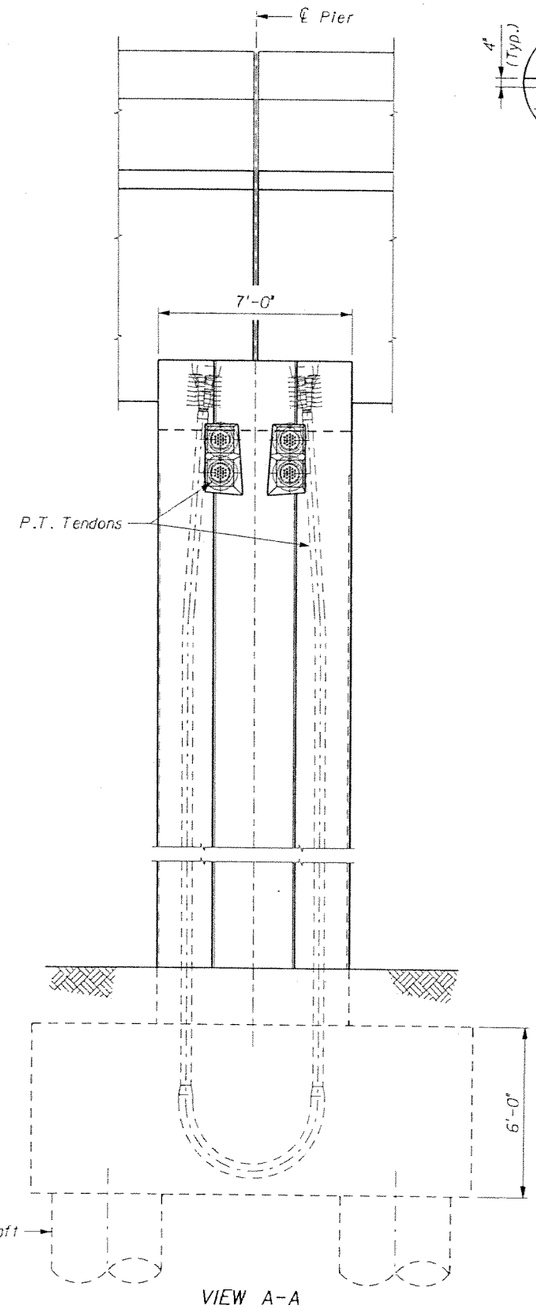

VIEW A-A

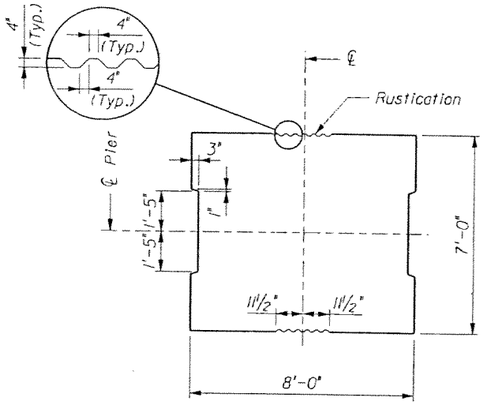

SECTION B-B

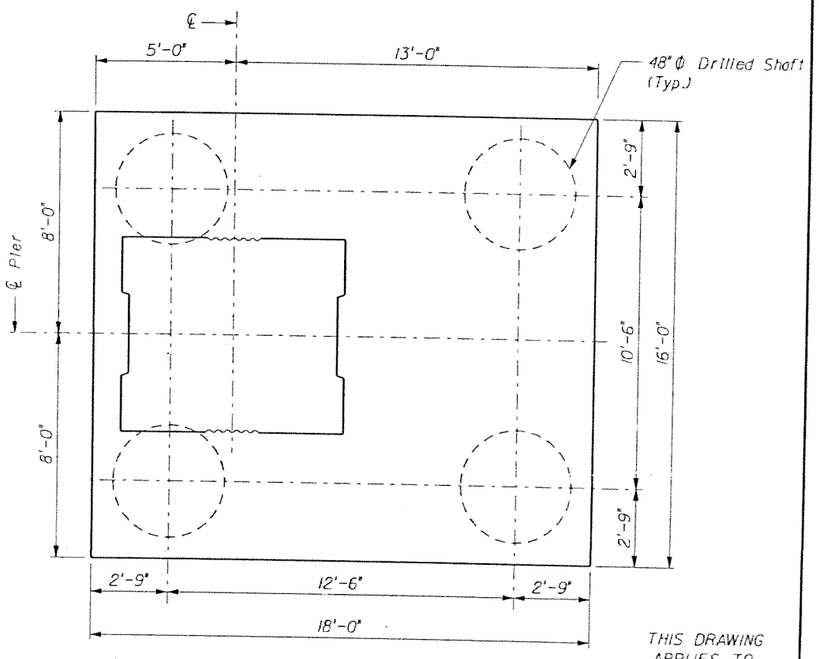

SECTION C-C

THIS DRAWING APPLIES TO:

Pier No.		
5	177	262
7	183	263
11	208	264
128	209	265

GTH	1-Nov-05					
Designed by	Date					
JLS	5-May-06					
Drawn by	Date					
JER	5-May-06					
Checked by	Date					
TWS	5-May-06					
Approved by	Date	No.	Date	By / Chk	App.	Revisions

NORTH CORRIDOR METRORAIL EXTENSION - PRELIMINARY ENGINEERING (100% SUBMITTAL)

SUBJECT TO CHANGE

MIAMI-DADE COUNTY

MIAMI-DADE TRANSIT

PARSONS
7600 CORPORATE CENTER DRIVE, SUITE 500
MIAMI, FLORIDA 33126
PHONE: (786) 464-1000 FAX: (786) 845-7119
CERTIFICATE OF AUTHORIZATION NO. 1638

Approved | Date

Approved | Date

STRUCTURES - GUIDEWAY (CONCRETE)

CANTILEVER PIER DIMENSIONS

Scale NTS | Drawing SGC- 122 | Sheet 333

5/9/2006 2:42:06 PM g:\646331_North_Corridor\CADD\Subst\Cantilever Pier Type 1.dgn

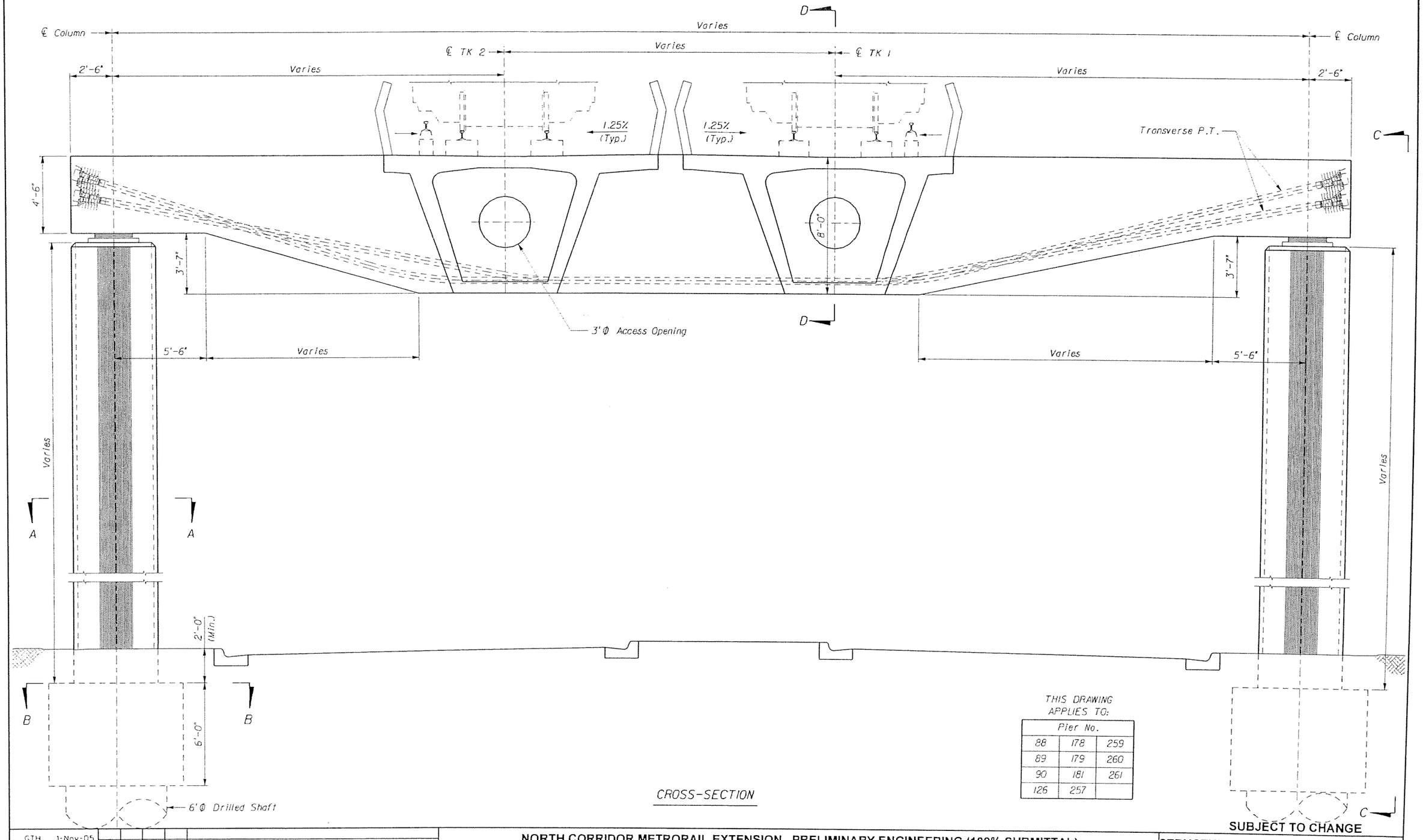

CROSS-SECTION

THIS DRAWING APPLIES TO:

Pier No.		
88	178	259
89	179	260
90	181	261
126	257	

SUBJECT TO CHANGE

GTH Designed by	1-Nov-05 Date					
JLS Drawn by	5-May-06 Date					
JER Checked by	5-May-06 Date					
TWS Approved by	5-May-06 Date	No.	Date	By / Chk	App.	Revisions

NORTH CORRIDOR METRORAIL EXTENSION - PRELIMINARY ENGINEERING (100% SUBMITTAL)

MIAMI-DADE COUNTY

MIAMI-DADE TRANSIT

PARSONS
7600 CORPORATE CENTER DRIVE, SUITE 500
MIAMI, FLORIDA 33126
PHONE: (786) 464-1000 FAX: (786) 845-7119
CERTIFICATE OF AUTHORIZATION NO. 1836

Approved | Date

Approved | Date

STRUCTURES - GUIDEWAY (CONCRETE)

TYPE 1 STRADDLE BENT DIMENSIONS AND P.T. 1

Scale NTS | Drawing SGC- 123 | Sheet 334

5/5/2006 6:11:46 PM g:\646331_north_corridor\cadd\subs\straddle bent type 1.dgn

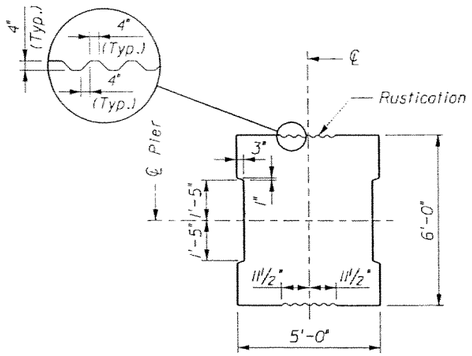

SECTION A-A

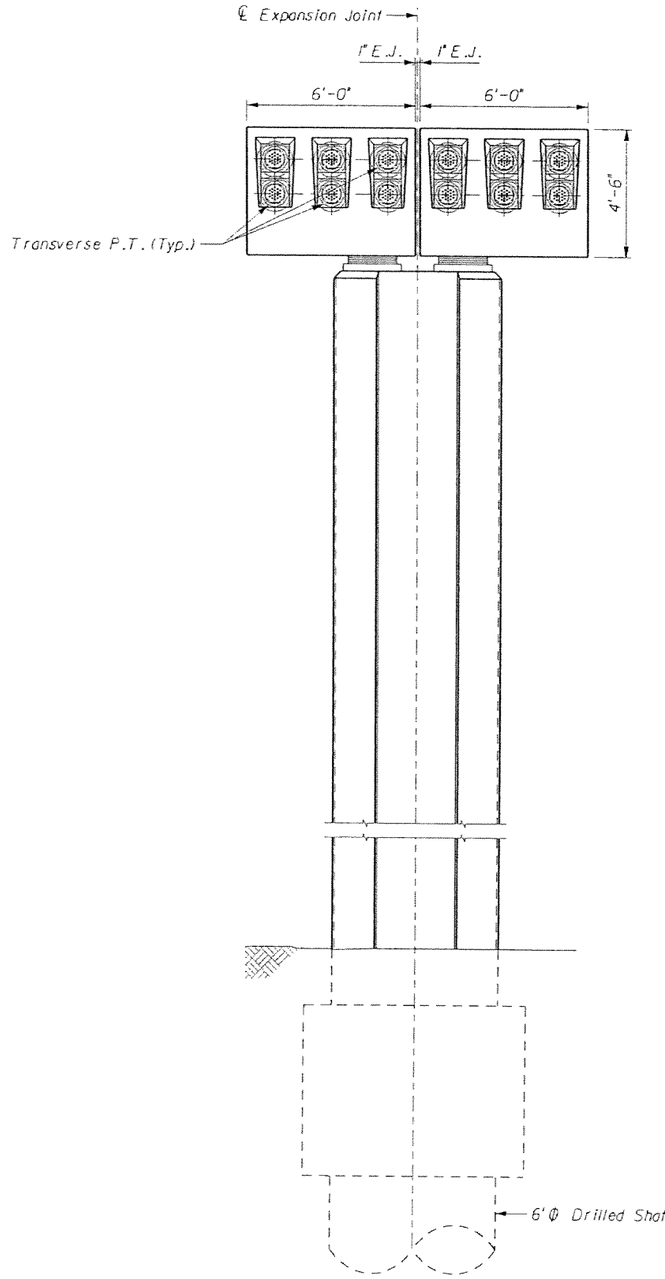

VIEW C-C

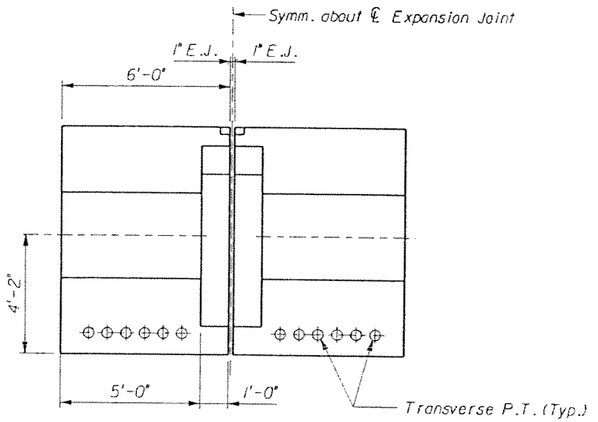

SECTION D-D

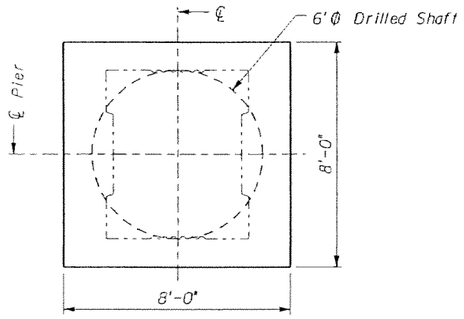

SECTION B-B

THIS DRAWING APPLIES TO:

Pier No.		
88	178	259
89	179	260
90	181	261
126	257	

SUBJECT TO CHANGE

GTH	1-Nov-05						
Designed by	Date						
JLS	5-May-06						
Drawn by	Date						
JER	5-May-06						
Checked by	Date						
TWS	5-May-06						
Approved by	Date	No.	Date	By / Chk	App.	Revisions	

NORTH CORRIDOR METRORAIL EXTENSION - PRELIMINARY ENGINEERING (100% SUBMITTAL)

STRUCTURES - GUIDEWAY (CONCRETE)

MIAMI-DADE COUNTY

MIAMI-DADE TRANSIT

PARSONS
7600 CORPORATE CENTER DRIVE, SUITE 500
MIAMI, FLORIDA 33126
PHONE: (786) 464-1000 FAX: (786) 845-7119
CERTIFICATE OF AUTHORIZATION NO. 1838

Approved | Date | Approved | Date

TYPE 1 STRADDLE BENT DIMENSIONS AND P.T. 2

Scale NTS | Drawing SGC- 124 | Sheet 335

5/8/2006 8:11:47 PM g:\646331_north_corridor\cadd\substs\straddle bent type 1.dgn

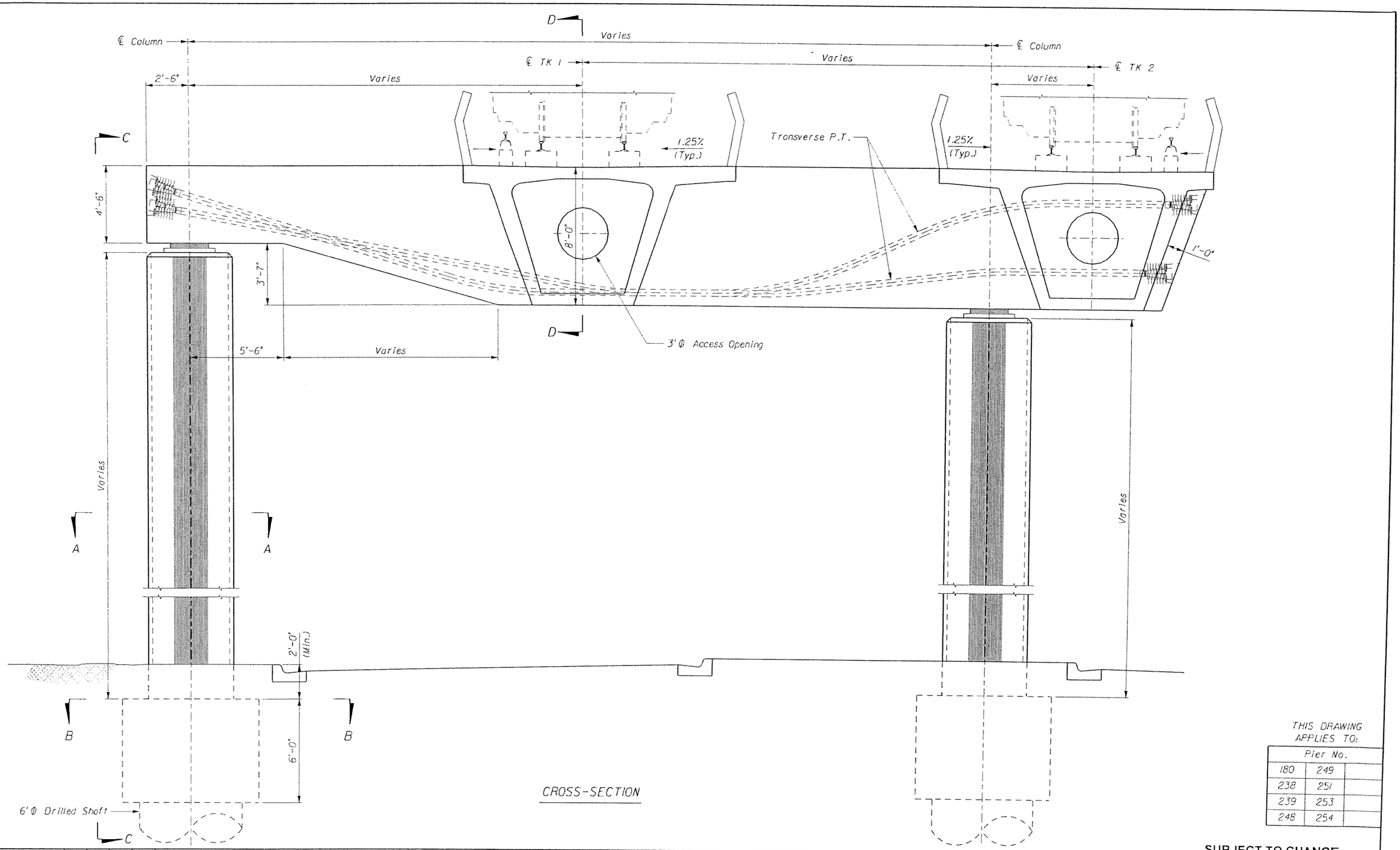

CROSS-SECTION

THIS DRAWING APPLIES TO:

Pier No.		
180	249	
238	251	
239	253	
248	254	

SUBJECT TO CHANGE

GTH Designed by	1-Nov-05 Date						
JLS Drawn by	5-May-06 Date						
JER Checked by	5-May-05 Date						
TWS Approved by	5-May-06 Date	No.	Date	By / Chk	App.	Revisions	

NORTH CORRIDOR METRORAIL EXTENSION - PRELIMINARY ENGINEERING (100% SUBMITTAL)

STRUCTURES - GUIDEWAY (CONCRETE)

MIAMI-DADE COUNTY

MIAMI-DADE TRANSIT

PARSONS
7600 CORPORATE CENTER DRIVE, SUITE 500
MIAMI, FLORIDA 33126
PHONE: (786) 464-1000 FAX: (786) 845-7119
CERTIFICATE OF AUTHORIZATION NO. 1638

Approved | Date | Approved | Date

TYPE 2 STRADDLE BENT DIMENSIONS AND P.T. 1

Scale NTS | Drawing SGC- 125 | Sheet 336

5/8/2006 8:11:49 PM g:\646331_north_corridor\cadd\subs\straddle bent type 2.dgn

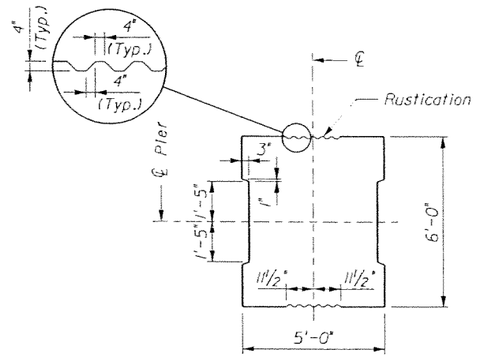

SECTION A-A

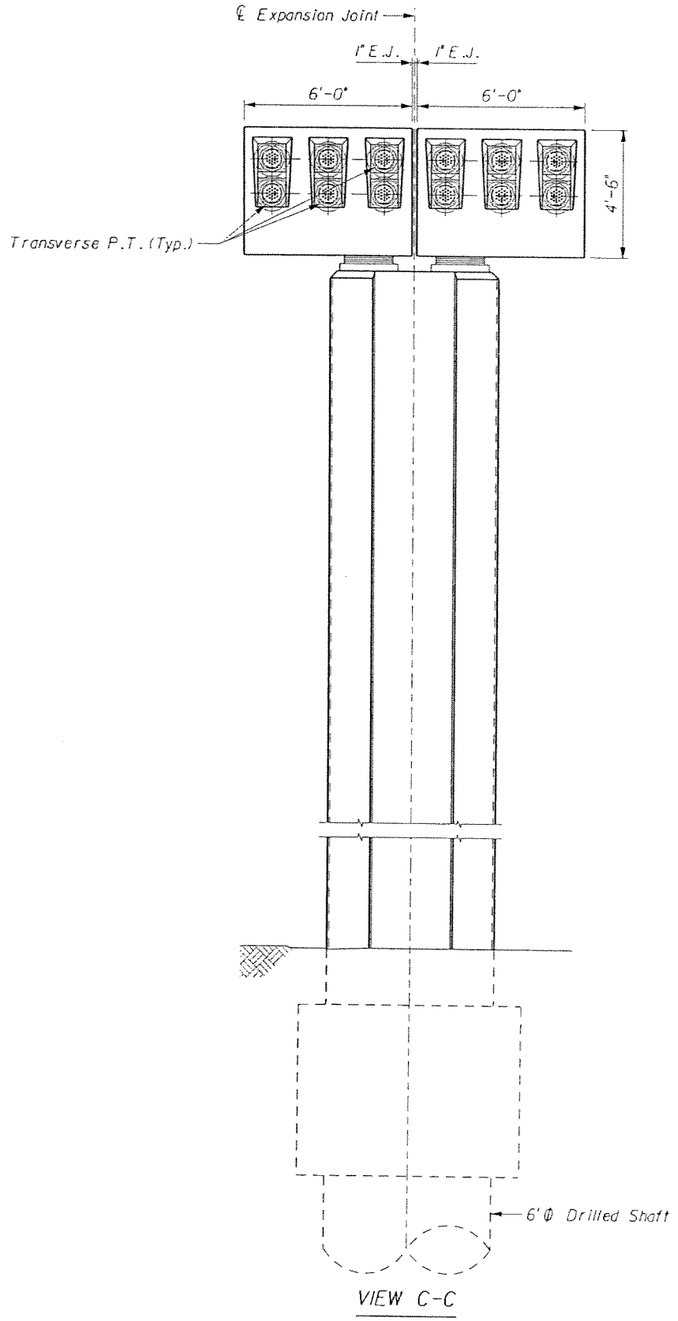

VIEW C-C

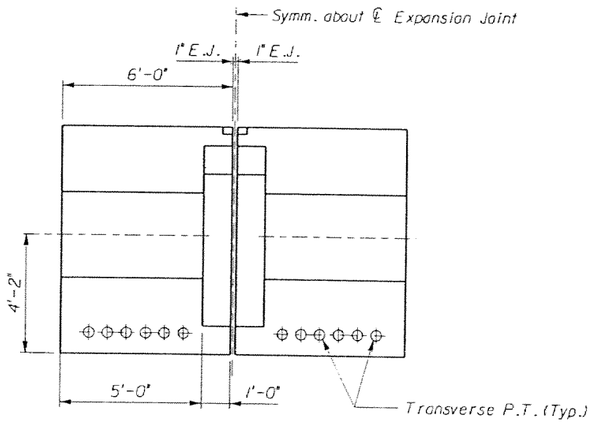

SECTION D-D

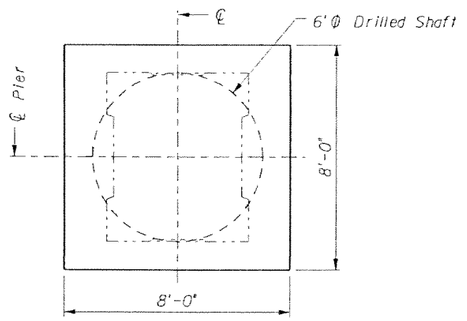

SECTION B-B

THIS DRAWING APPLIES TO:

Pier No.		
180	249	
238	251	
239	253	
248	254	

GTH 1-Nov-05 Designed by Date					
JLS 5-May-06 Drawn by Date					
JER 5-May-06 Checked by Date					
TWS 5-May-06 Approved by Date	No.	Date	By / Chk	App.	Revisions

NORTH CORRIDOR METRORAIL EXTENSION - PRELIMINARY ENGINEERING (100% SUBMITTAL)

SUBJECT TO CHANGE

STRUCTURES - GUIDEWAY (CONCRETE)

MIAMI-DADE COUNTY

MIAMI-DADE TRANSIT

PARSONS
7600 CORPORATE CENTER DRIVE, SUITE 500
MIAMI, FLORIDA 33126
PHONE: (786) 464-1000 FAX: (786) 645-7119
CERTIFICATE OF AUTHORIZATION NO. 1638

Approved | Date | Approved | Date

TYPE 2 STRADDLE BENT DIMENSIONS AND P.T. 2

Scale NTS | Drawing SGC- 126 | Sheet 337

5/8/2006 8:11:50 PM g:\646331_north_corridor\cadd\substr\straddle bent type 2.dgn

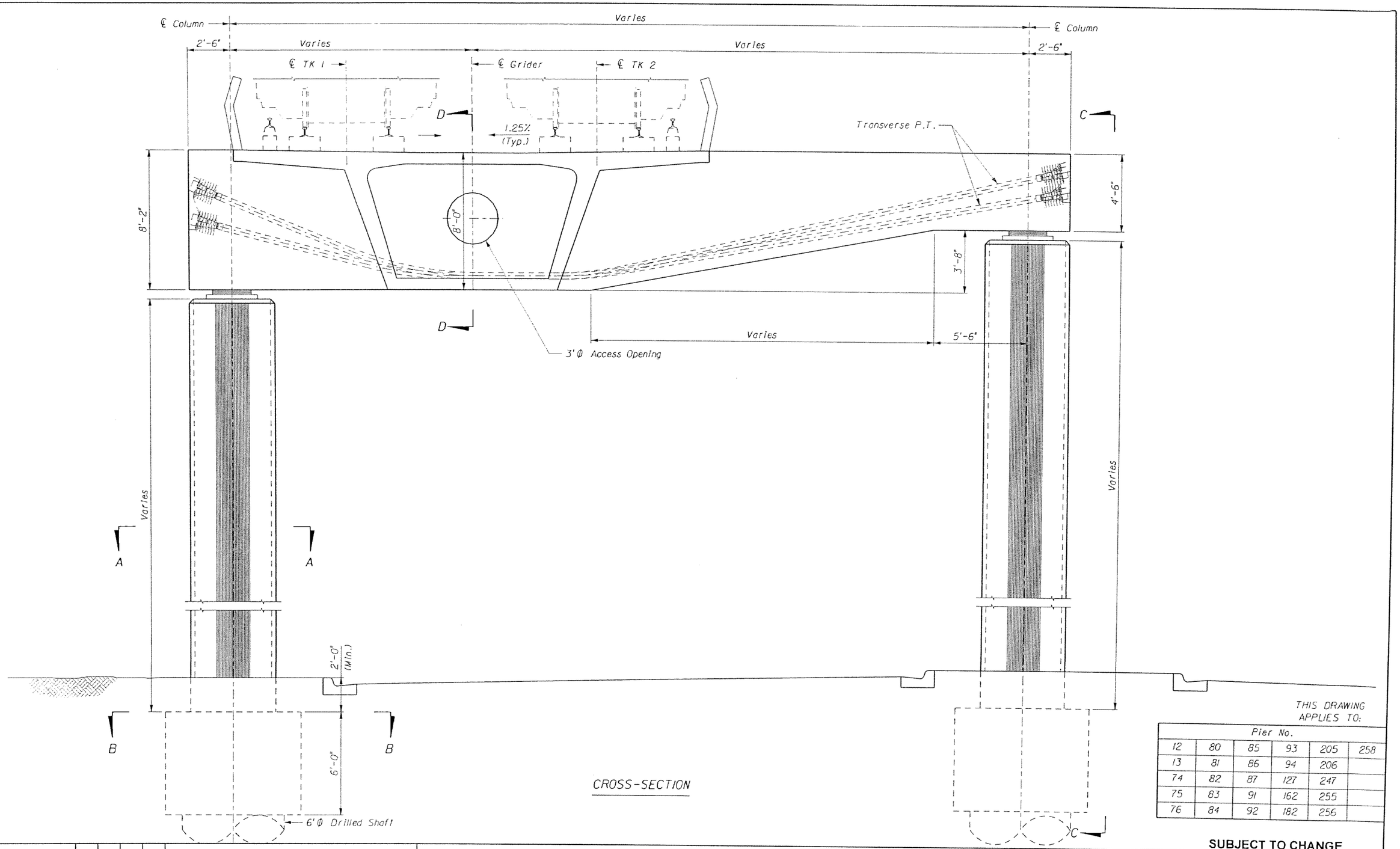

CROSS-SECTION

THIS DRAWING APPLIES TO:

Pier No.					
12	80	85	93	205	258
13	81	86	94	206	
74	82	87	127	247	
75	83	91	162	255	
76	84	92	182	256	

SUBJECT TO CHANGE

GTH	1-Nov-05				
Designed by	Date				
JLS	5-May-06				
Drawn by	Date				
JER	5-May-06				
Checked by	Date				
TWS	5-May-06				
Approved by	Date	No.	Date	By / Chk	App. Revisions

NORTH CORRIDOR METRORAIL EXTENSION - PRELIMINARY ENGINEERING (100% SUBMITTAL)

STRUCTURES - GUIDEWAY (CONCRETE)

MIAMI-DADE COUNTY

MIAMI-DADE TRANSIT

PARSONS
7600 CORPORATE CENTER DRIVE, SUITE 500
MIAMI, FLORIDA 33126
PHONE: (786) 464-1000 FAX: (786) 845-7119
CERTIFICATE OF AUTHORIZATION NO. 1836

Approved | Date | Approved | Date

TYPE 3 STRADDLE BENT DIMENSIONS AND P.T. 1

Scale NTS | Drawing SGC- 127 | Sheet 338

5/8/2006 6:11:51 PM g:\646331_north_corridor\cadd\subs\straddle bent type 3.dgn

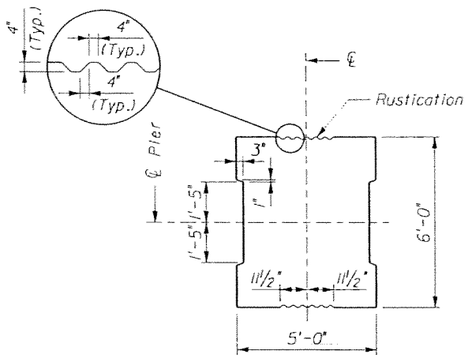

SECTION A-A

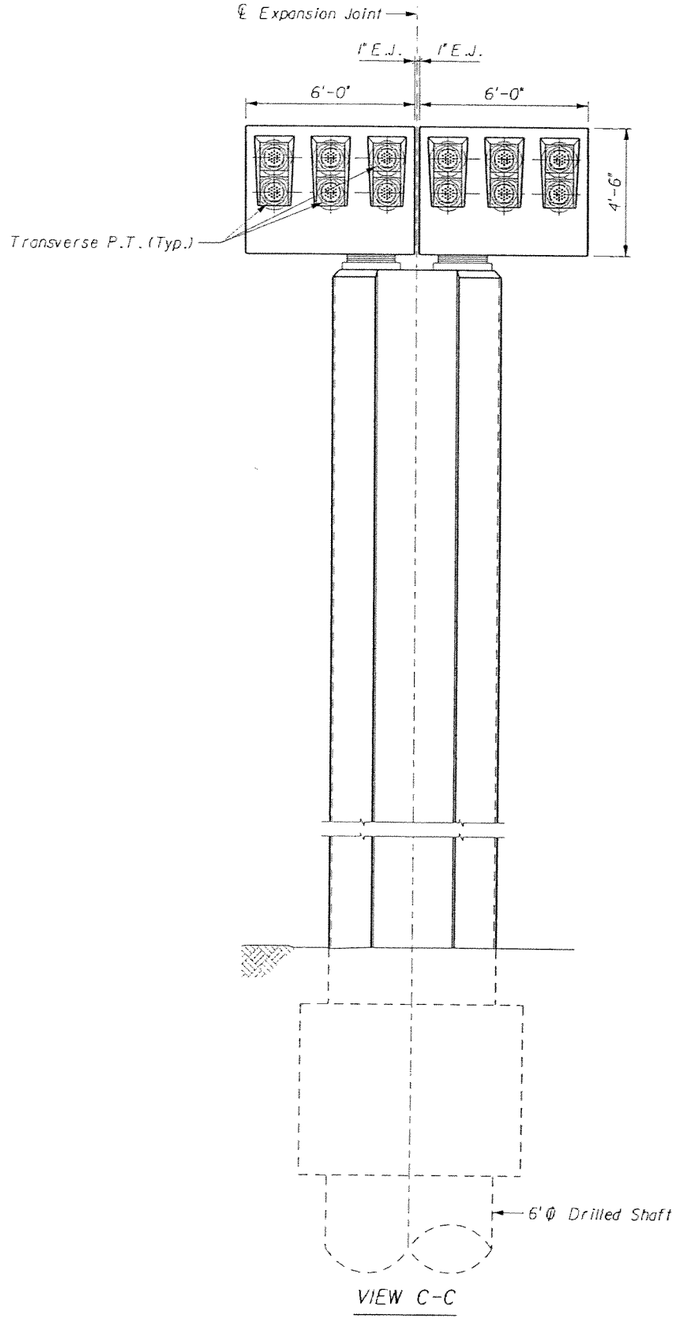

VIEW C-C

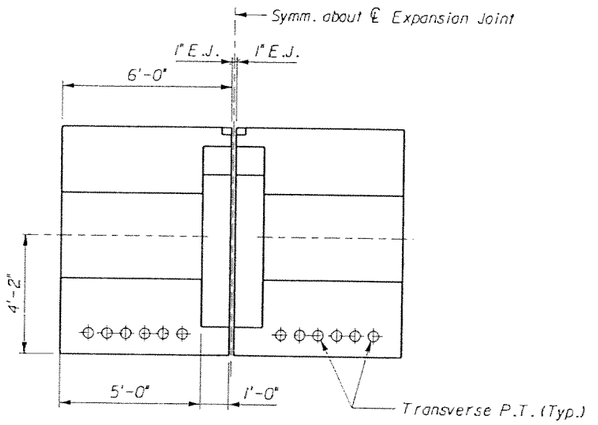

SECTION D-D

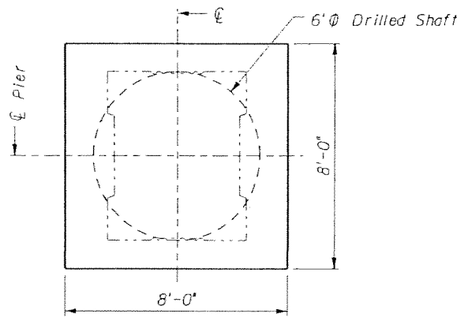

SECTION B-B

THIS DRAWING APPLIES TO:

Pier No.					
12	80	85	93	205	258
13	81	86	94	206	
74	82	87	127	247	
75	83	91	162	255	
76	84	92	182	256	

SUBJECT TO CHANGE

GTH 1-Nov-05 Designed by Date						NORTH CORRIDOR METRORAIL EXTENSION - PRELIMINARY ENGINEERING (100% SUBMITTAL)	STRUCTURES - GUIDEWAY (CONCRETE)
JLS 5-May-06 Drawn by Date						MIAMI-DADE COUNTY MIAMI-DADE TRANSIT	TYPE 3 STRADDLE BENT DIMENSIONS AND P.T. 2
JER 5-May-06 Checked by Date						PARSONS 7800 CORPORATE CENTER DRIVE, SUITE 500 MIAMI, FLORIDA 33126 PHONE: (786) 464-1000 FAX: (786) 845-7119 CERTIFICATE OF AUTHORIZATION NO. 1838	
TWS 5-May-06 Approved by Date	No.	Date	By / Chk	App.	Revisions	Approved / Date	Approved / Date

Scale NTS | Drawing SGC- 128 | Sheet 339

5/8/2006 6:11:52 PM g:\646331_north_corridor\cad\feasbst\straddle bent type 3.dgn

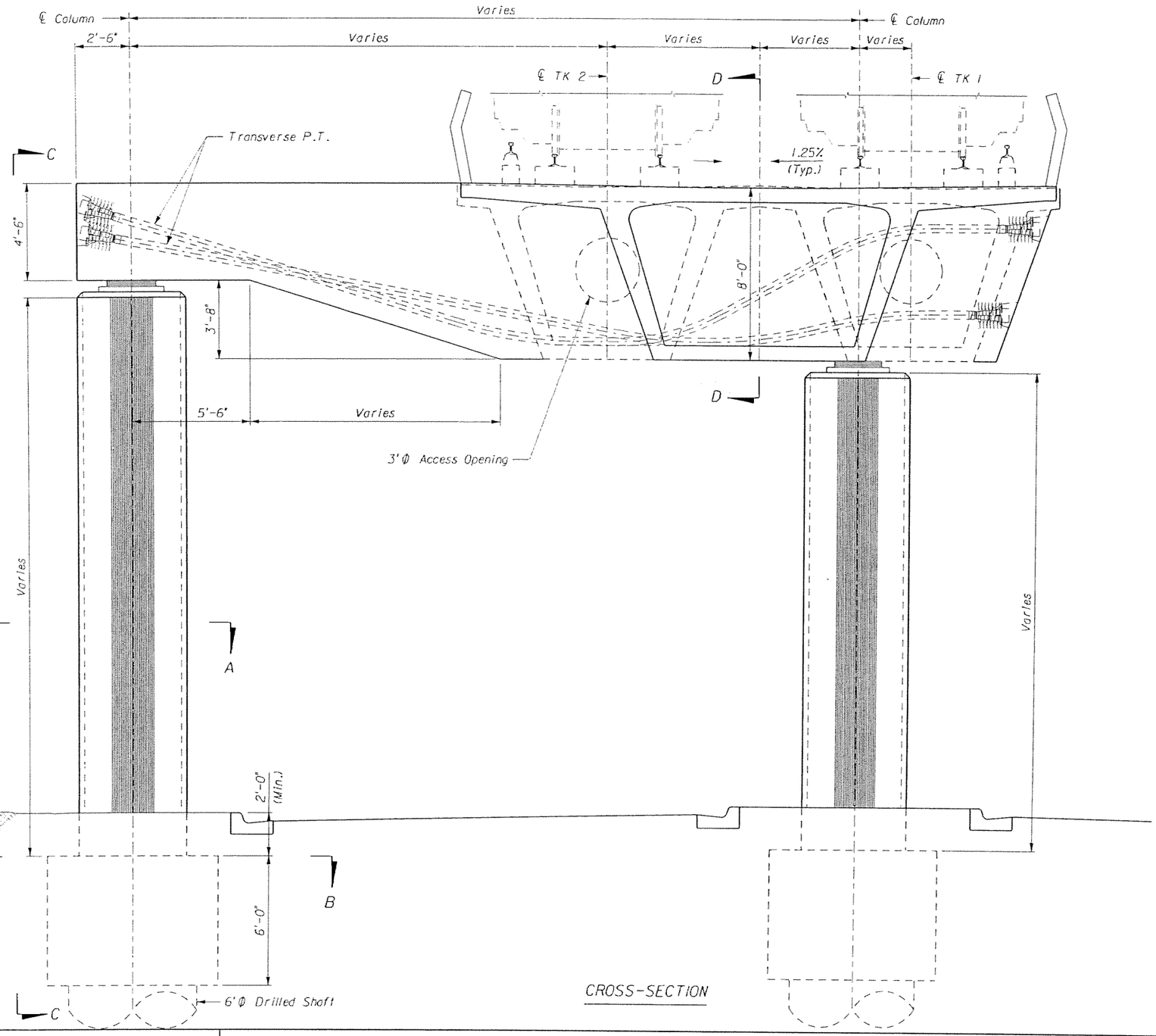

THIS DRAWING APPLIES TO:

Pier No.			
1			
207			
250			

SUBJECT TO CHANGE

GTH	1-Nov-05					
Designed by	Date					
JLS	5-May-06					
Drawn by	Date					
JER	5-May-06					
Checked by	Date					
TWS	5-May-06					
Approved by	Date	No.	Date	By / Chk	App.	Revisions

NORTH CORRIDOR METRORAIL EXTENSION - PRELIMINARY ENGINEERING (100% SUBMITTAL)

STRUCTURES - GUIDEWAY (CONCRETE)

MIAMI-DADE COUNTY

MIAMI-DADE TRANSIT

PARSONS
7600 CORPORATE CENTER DRIVE, SUITE 500
MIAMI, FLORIDA 33126
PHONE: (786) 464-1000 FAX: (786) 845-7119
CERTIFICATE OF AUTHORIZATION NO. 1838

Approved | Date

Approved | Date

TYPE 4 STRADDLE BENT DIMENSIONS AND P.T. 1

Scale: NTS | Drawing: SGC- 129 | Sheet: 340

5/8/2006 6:11:54 PM g:\V465331_north_corridor\cadd\subs\straddle bent type 4.dgn

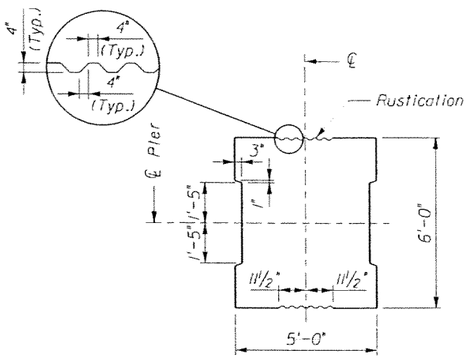

SECTION A-A

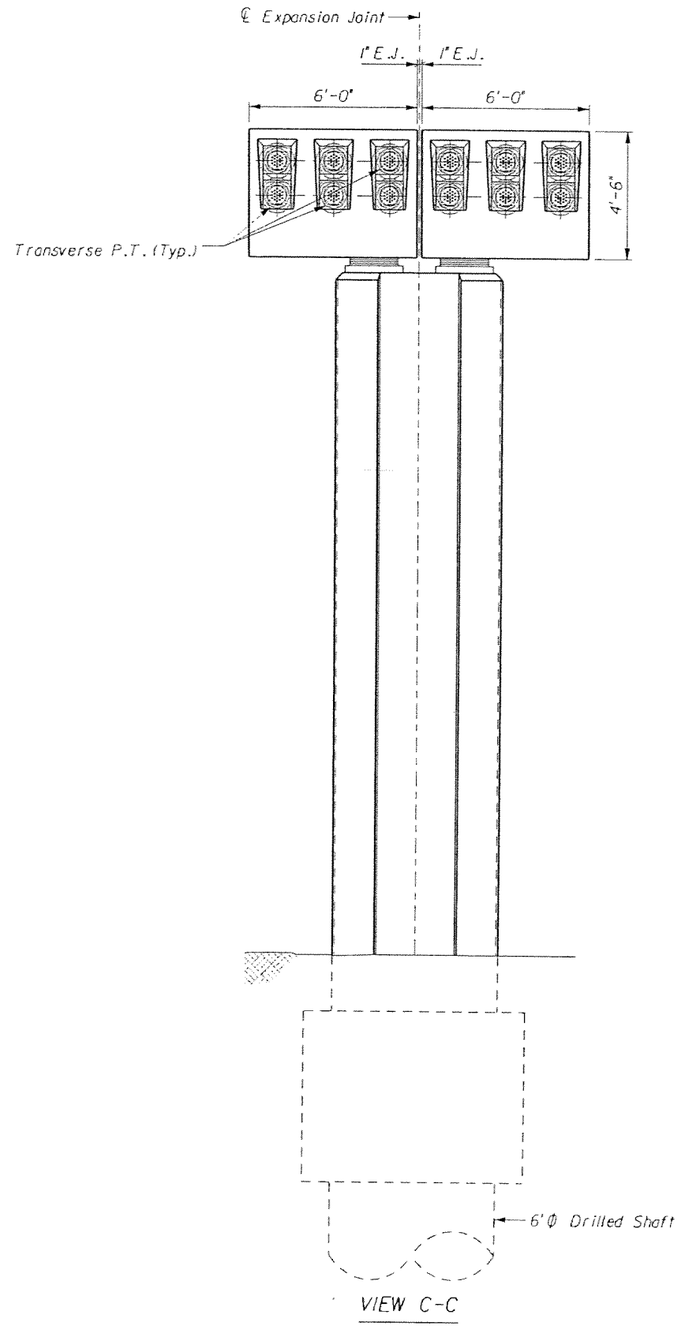

VIEW C-C

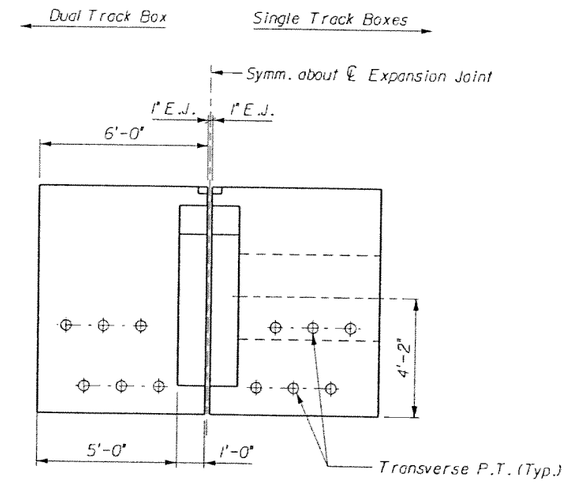

SECTION D-D

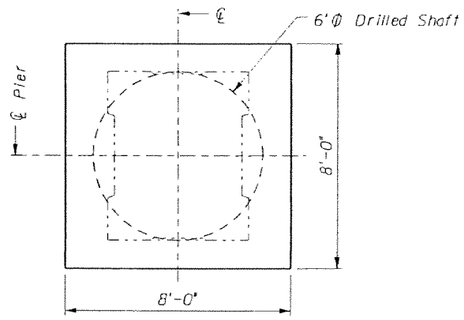

SECTION B-B

THIS DRAWING APPLIES TO:

Pier No.			
1			
207			
250			

SUBJECT TO CHANGE

GTH	1-Nov-05					
Designed by	Date					
JLS	5-May-06					
Drawn by	Date					
JER	5-May-06					
Checked by	Date					
TWS	5-May-06					
Approved by	Date	No.	Date	By / Chk	App.	Revisions

NORTH CORRIDOR METRORAIL EXTENSION - PRELIMINARY ENGINEERING (100% SUBMITTAL)

STRUCTURES - GUIDEWAY (CONCRETE)

MIAMI-DADE COUNTY

MIAMI-DADE TRANSIT

PARSONS
7600 CORPORATE CENTER DRIVE, SUITE 500
MIAMI, FLORIDA 33126
PHONE: (786) 464-1000 FAX: (786) 845-7119
CERTIFICATE OF AUTHORIZATION NO. 1638

TYPE 4 STRADDLE BENT DIMENSIONS AND P.T. 2

Approved	Date	Approved	Date	Scale	Drawing	Sheet
				NTS	SGC- 130	341

5/8/2006 8:11:55 PM g:\646331_north_corridor\cadd\substs\straddle bent type 4.dgn

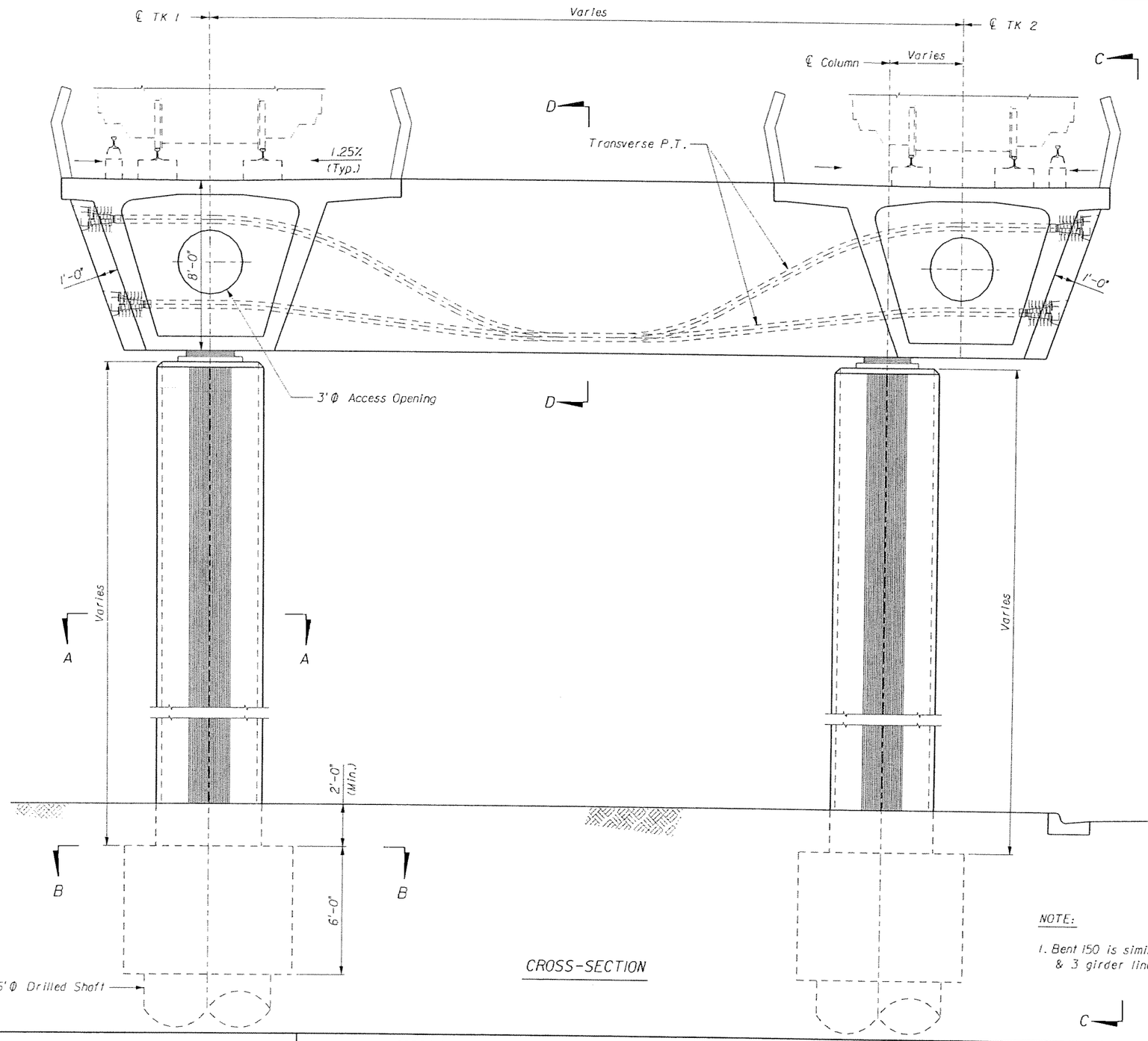

CROSS-SECTION

NOTE:

1. Bent 150 is similar but has 3 columns/caissons & 3 girder lines.

C

THIS DRAWING APPLIES TO:

Pier No.		
47	97	
56	148	
95	149	
96	150	

SUBJECT TO CHANGE

GTH	1-Nov-05						
Designed by	Date						
JLS	5-May-06						
Drawn by	Date						
JER	5-May-06						
Checked by	Date						
TWS	5-May-06						
Approved by	Date	No.	Date	By / Chk	App.	Revisions	

NORTH CORRIDOR METRORAIL EXTENSION - PRELIMINARY ENGINEERING (100% SUBMITTAL)

MIAMI-DADE COUNTY

MIAMI-DADE TRANSIT

PARSONS
7600 CORPORATE CENTER DRIVE, SUITE 500
MIAMI, FLORIDA 33126
PHONE: (786) 464-1000 FAX: (786) 845-7119
CERTIFICATE OF AUTHORIZATION NO. 1838

Approved | Date | Approved | Date

STRUCTURES - GUIDEWAY (CONCRETE)

TYPE 5 STRADDLE BENT DIMENSIONS AND P.T. 1

Scale NTS | Drawing SGC- 131 | Sheet 34 of 72

5/8/2006 6:11:56 PM g:\046331_north_corridor\cadd\substs\straddle bent type 5.dgn

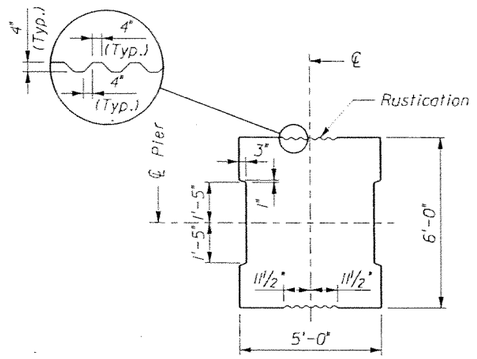

SECTION A-A

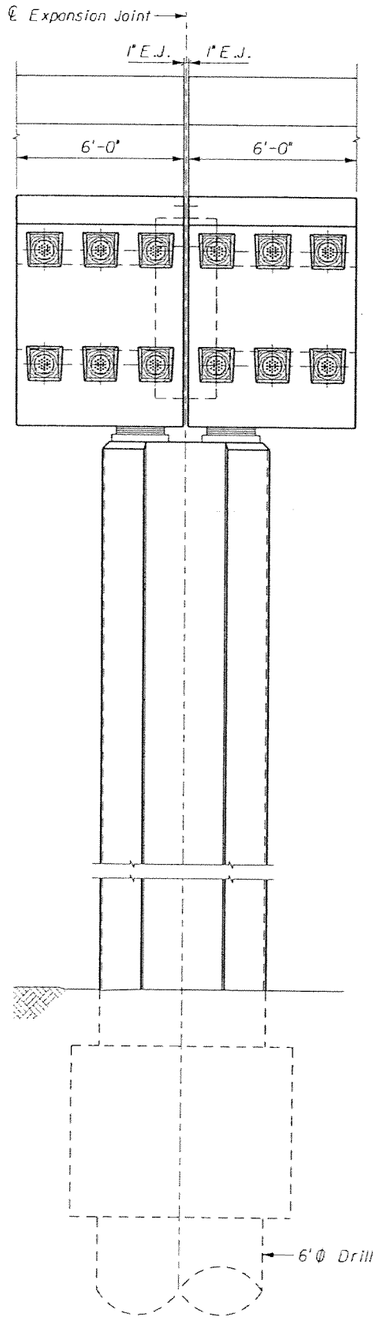

VIEW C-C

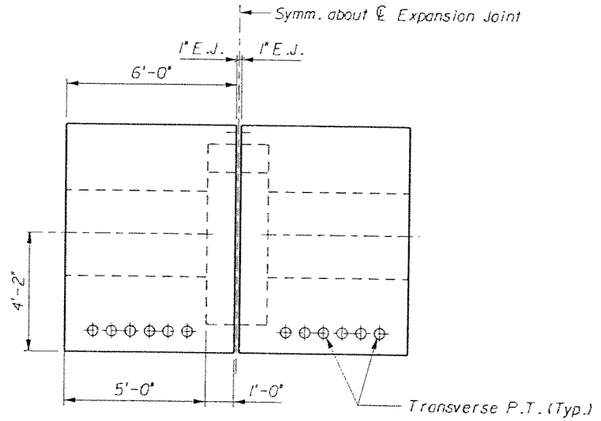

SECTION D-D

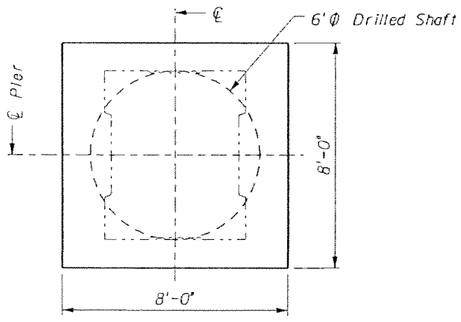

SECTION B-B

THIS DRAWING APPLIES TO:

Pier No.		
47	97	
56	148	
95	149	
96	150	

SUBJECT TO CHANGE

GTH Designed by	1-Nov-05 Date					
JLS Drawn by	5-May-06 Date					
JER Checked by	5-May-06 Date					
TWS Approved by	5-May-06 Date	No.	Date	By / Chk	App.	Revisions

NORTH CORRIDOR METRORAIL EXTENSION - PRELIMINARY ENGINEERING (100% SUBMITTAL)

STRUCTURES - GUIDEWAY (CONCRETE)

MIAMI-DADE COUNTY

MIAMI-DADE TRANSIT

PARSONS
7600 CORPORATE CENTER DRIVE, SUITE 500
MIAMI, FLORIDA 33126
PHONE: (786) 464-1000 FAX: (786) 845-7119
CERTIFICATE OF AUTHORIZATION NO. 1838

Approved | Date | Approved | Date

TYPE 5 STRADDLE BENT DIMENSIONS AND P.T. 2

Scale NTS | Drawing SGC- 132 | Sheet 342

5/8/2006 8:11:57 PM g:\646331_north_corridor\cadd\substs\straddle bent type 5.dgn

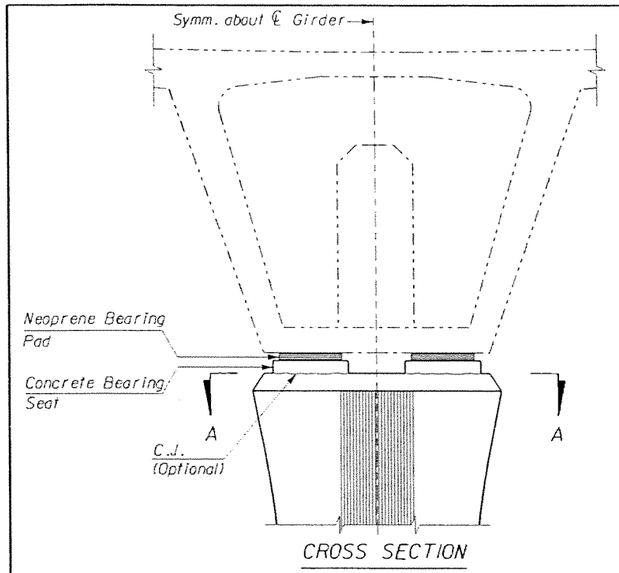

CROSS SECTION

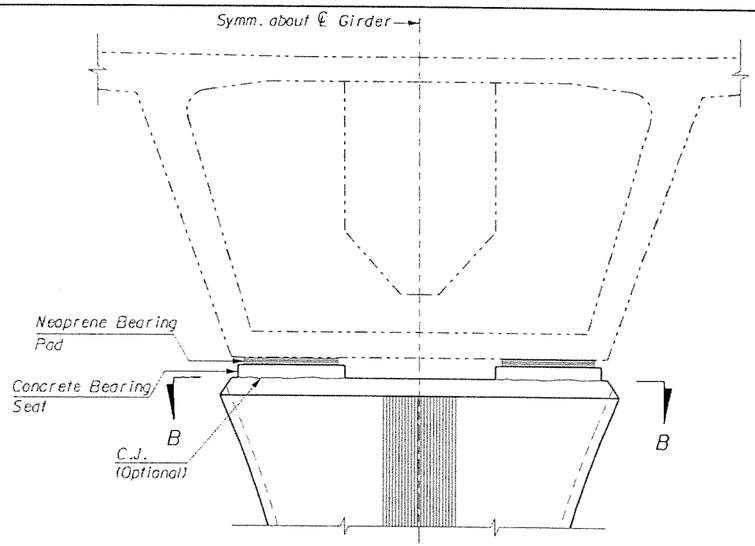

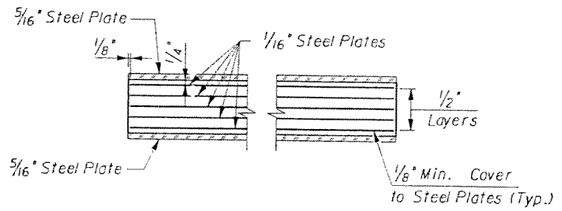

BEARING CROSS-SECTION

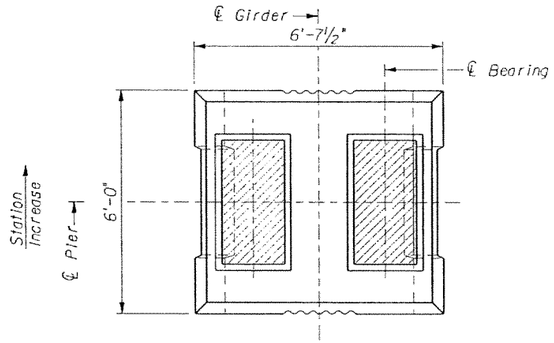

SECTION A-A
(Pier Segment)

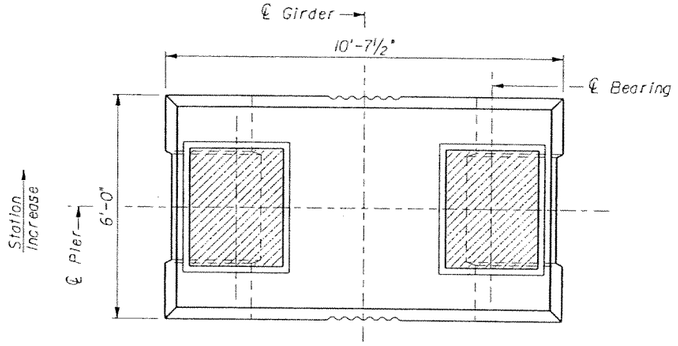

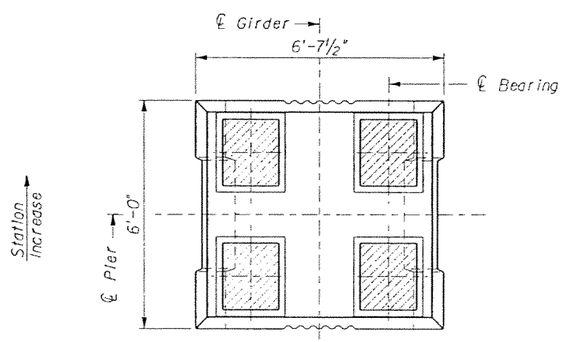

SECTION A-A
(Expansion joint Segment)

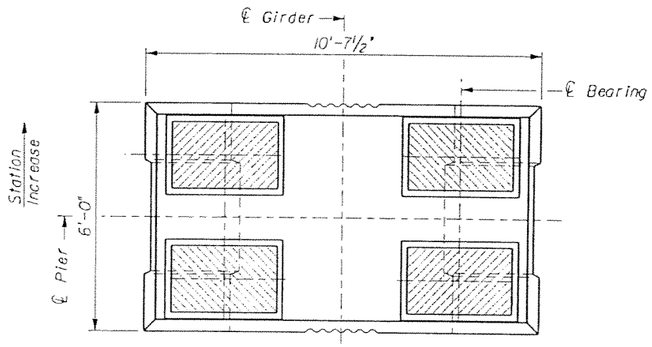

SECTION B-B
(Expansion joint Segment)

NOTES:

1. Steel plates (5/16" thick) shall be hot bonded to the neoprene at top and bottom by bearing pad manufacturer. All exposed surfaces of steel plates shall be protected from corrosion within 7 days after the pad fabrication is completed and prior to shipping to the job site.
2. Top of concrete pedestal must be smooth and level. The maximum difference in elevation at any points within the bearing surface shall not be greater than 1/32". Grind the concrete surface, if required, to achieve the specified surface level.
3. Remove the corrosion protection from the steel plates and clean the top and bottom surfaces with heavy duty power equipment just prior to the pad installation.
4. Bond the bearing pad to the concrete bearing seat with epoxy adhesive. Coat all exposed side edges of steel plates with epoxy coating.

GTH	1-Nov-05				
Designed by	Date				
JLS	5-May-06				
Drawn by	Date				
JER	5-May-06				
Checked by	Date				
TWS	5-May-06				
Approved by	Date	No.	Date	By / Chk	App.	Revisions

NORTH CORRIDOR METRORAIL EXTENSION - PRELIMINARY ENGINEERING (100% SUBMITTAL)

SUBJECT TO CHANGE

STRUCTURES - GUIDEWAY (CONCRETE)

MIAMI-DADE COUNTY

MIAMI-DADE TRANSIT

PARSONS
7600 CORPORATE CENTER DRIVE, SUITE 500
MIAMI, FLORIDA 33126
PHONE: (786) 464-1000 FAX: (786) 845-7119
CERTIFICATE OF AUTHORIZATION NO. 1838

Approved | Date

Approved | Date

BEARING DETAILS

Scale: NTS | Drawing: SGC- 133 | Sheet: 344

5/8/2006 6:11:59 PM g:\646331_north_corridor\cadd\subs\bearings.dgn

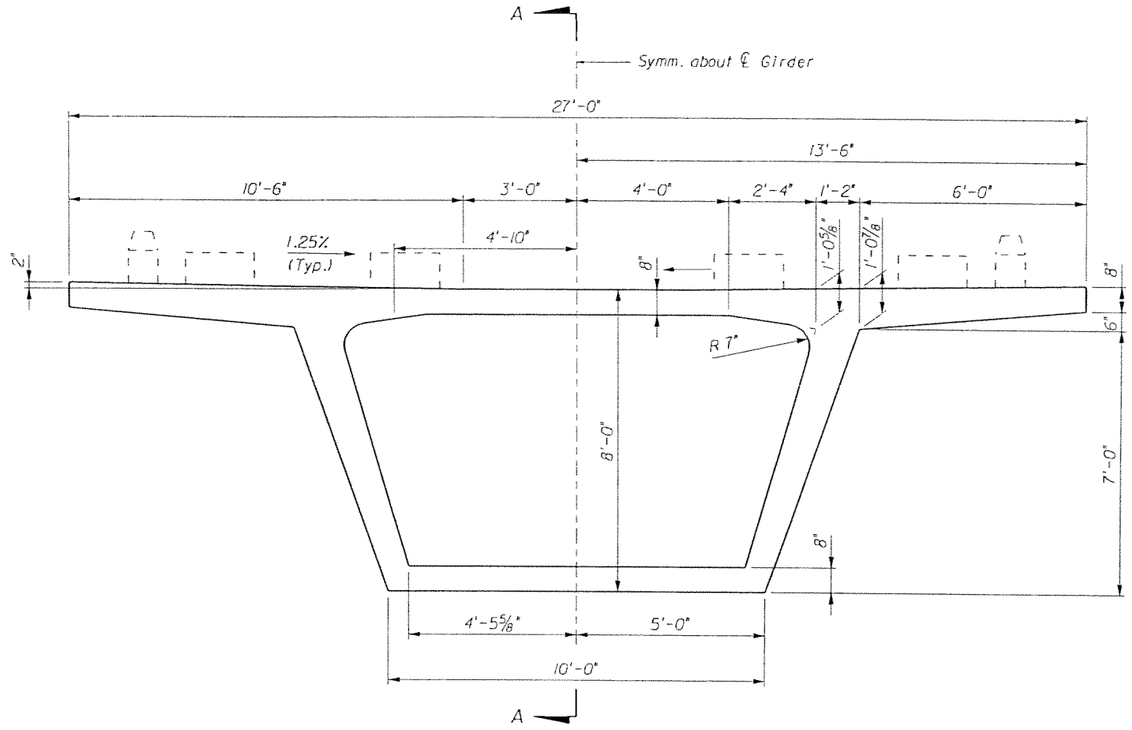

CROSS-SECTION

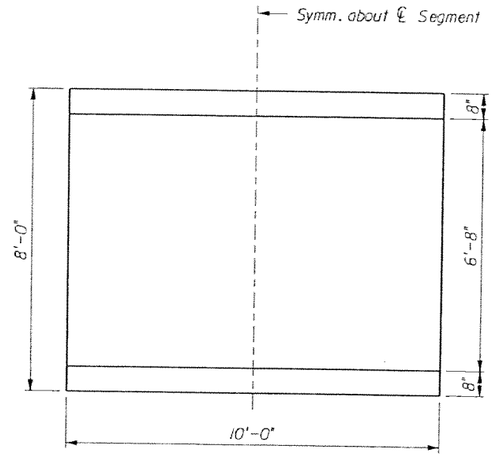

SECTION A-A

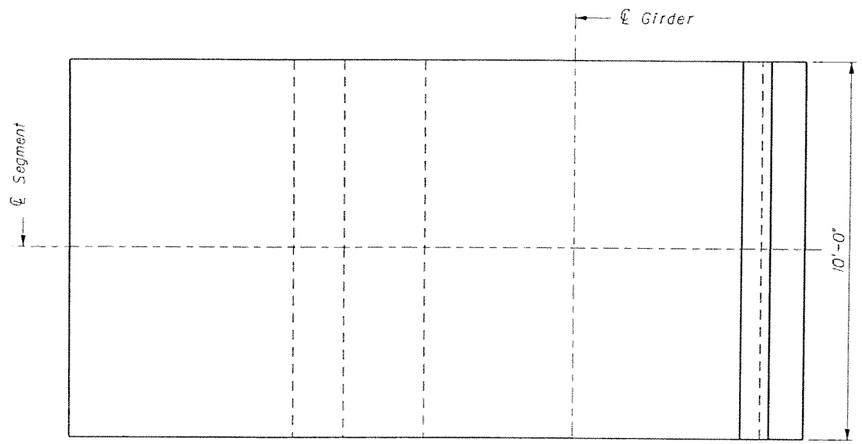

HALF PLAN TOP

HALF PLAN BOTTOM

GTH Designed by	1-Nov-05 Date				
JLS Drawn by	5-May-06 Date				
JER Checked by	5-May-06 Date				
TWS Approved by	5-May-06 Date	No.	Date	By / Chk	App.	Revisions

NORTH CORRIDOR METRORAIL EXTENSION - PRELIMINARY ENGINEERING (100% SUBMITTAL)

SUBJECT TO CHANGE

STRUCTURES - GUIDEWAY (CONCRETE)

MIAMI-DADE COUNTY

MIAMI-DADE TRANSIT

PARSONS
7600 CORPORATE CENTER DRIVE, SUITE 500
MIAMI, FLORIDA 33126
PHONE: (786) 464-1000 FAX: (786) 845-7119
CERTIFICATE OF AUTHORIZATION NO. 1838

Approved | Date | Approved | Date

TYPICAL SEGMENT DIMENSIONS
DUAL TRACK GUIDEWAY

Scale NTS | Drawing SGC- 134 | Sheet 345

5/8/2006 5:47:40 PM g:\648331_north_corridor\cadd\superst\typseg_1.dgn

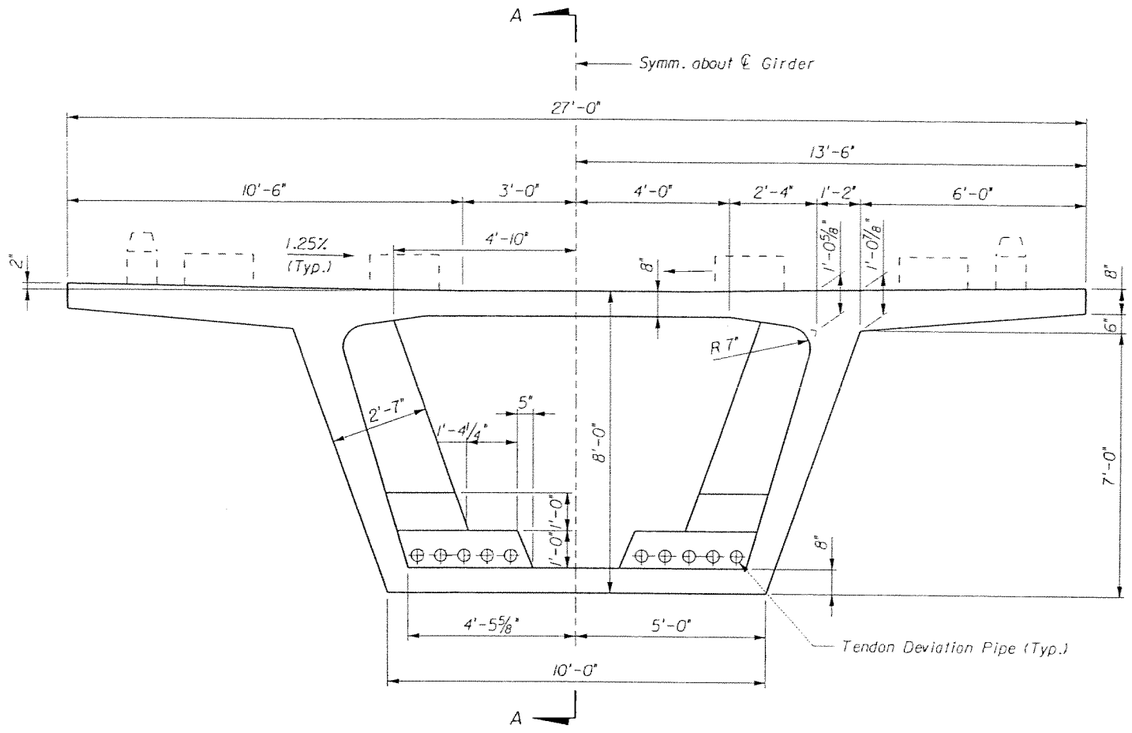

CROSS-SECTION

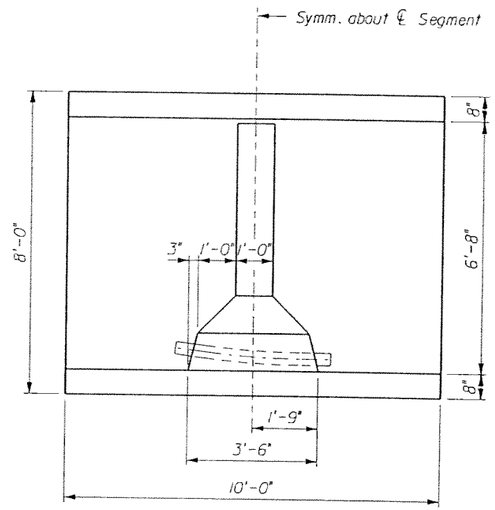

SECTION A-A

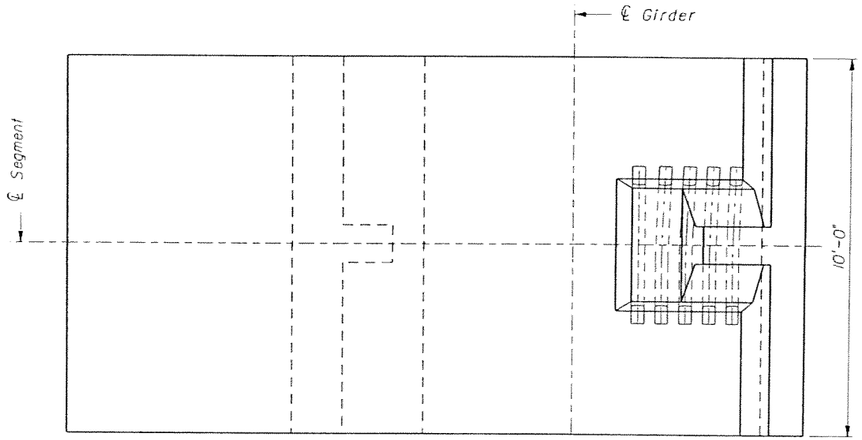

HALF PLAN TOP

HALF PLAN BOTTOM

GTH Designed by	1-Nov-05 Date				
JLS Drawn by	5-May-06 Date				
JER Checked by	5-May-06 Date				
TWS Approved by	5-May-06 Date	No.	Date	By / Chk	App.	Revisions

NORTH CORRIDOR METRORAIL EXTENSION - PRELIMINARY ENGINEERING (100% SUBMITTAL)

SUBJECT TO CHANGE

MIAMI-DADE COUNTY

MIAMI-DADE TRANSIT

PARSONS
7600 CORPORATE CENTER DRIVE, SUITE 500
MIAMI, FLORIDA 33126
PHONE: (786) 464-1000 FAX: (786) 845-7119
CERTIFICATE OF AUTHORIZATION NO. 1838

Approved | Date | Approved | Date

STRUCTURES - GUIDEWAY (CONCRETE)

DEVIATION SEGMENT DIMENSIONS
DUAL TRACK GUIDEWAY

Scale NTS | Drawing SGC- 135 | Sheet 346

5/8/2006 5:47:41 PM g:\646331_north_corridor\cadd\superst\deviationseg_1.dgn

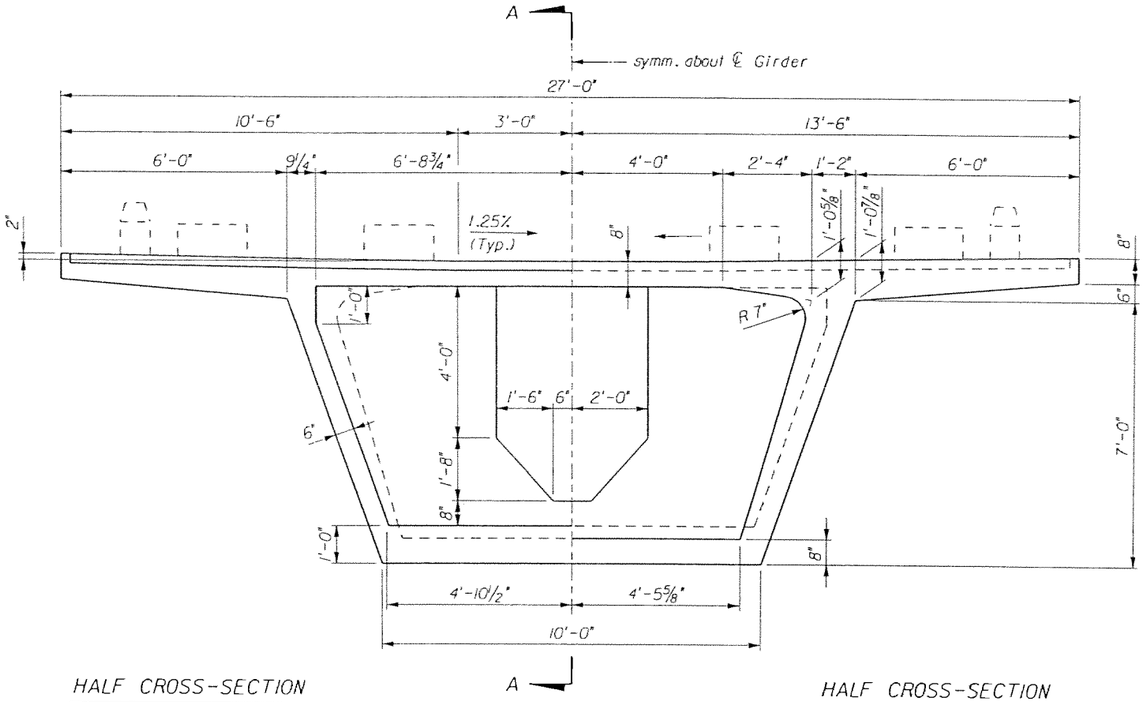

HALF CROSS-SECTION
EXPANSION JOINT FACE

HALF CROSS-SECTION
TYPICAL FACE

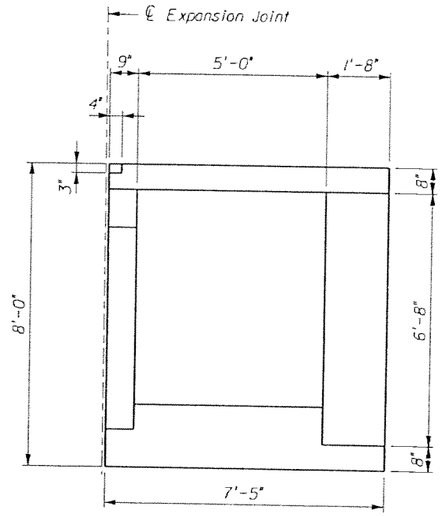

Expansion Joint Face

Typical Face

SECTION A-A

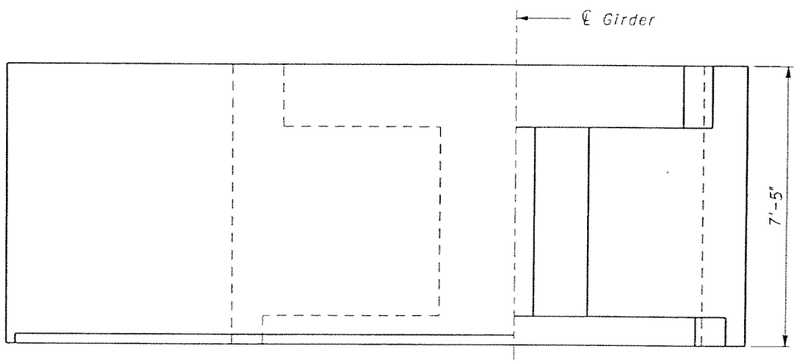

HALF PLAN TOP

HALF PLAN BOTTOM

GTH Designed by	1-Nov-05 Date					
JLS Drawn by	5-May-06 Date					
JER Checked by	5-May-06 Date					
TWS Approved by	5-May-06 Date	No.	Date	By / Chk.	App.	Revisions

NORTH CORRIDOR METRORAIL EXTENSION - PRELIMINARY ENGINEERING (100% SUBMITTAL)

SUBJECT TO CHANGE

STRUCTURES - GUIDEWAY (CONCRETE)

MIAMI-DADE COUNTY

MIAMI-DADE TRANSIT

PARSONS
7600 CORPORATE CENTER DRIVE, SUITE 500
MIAMI, FLORIDA 33126
PHONE: (786) 464-1000 FAX: (786) 845-7119
CERTIFICATE OF AUTHORIZATION NO. 1838

Approved | Date | Approved | Date

EXPANSION JOINT SEGMENT
DIMENSIONS
DUAL TRACK GUIDEWAY

Scale: NTS | Drawing: SGC- 136 | Sheet: 347

5/8/2006 5:47:42 PM g:\646331_north_corridor\cadd\superst\expansionseg_1.dgn

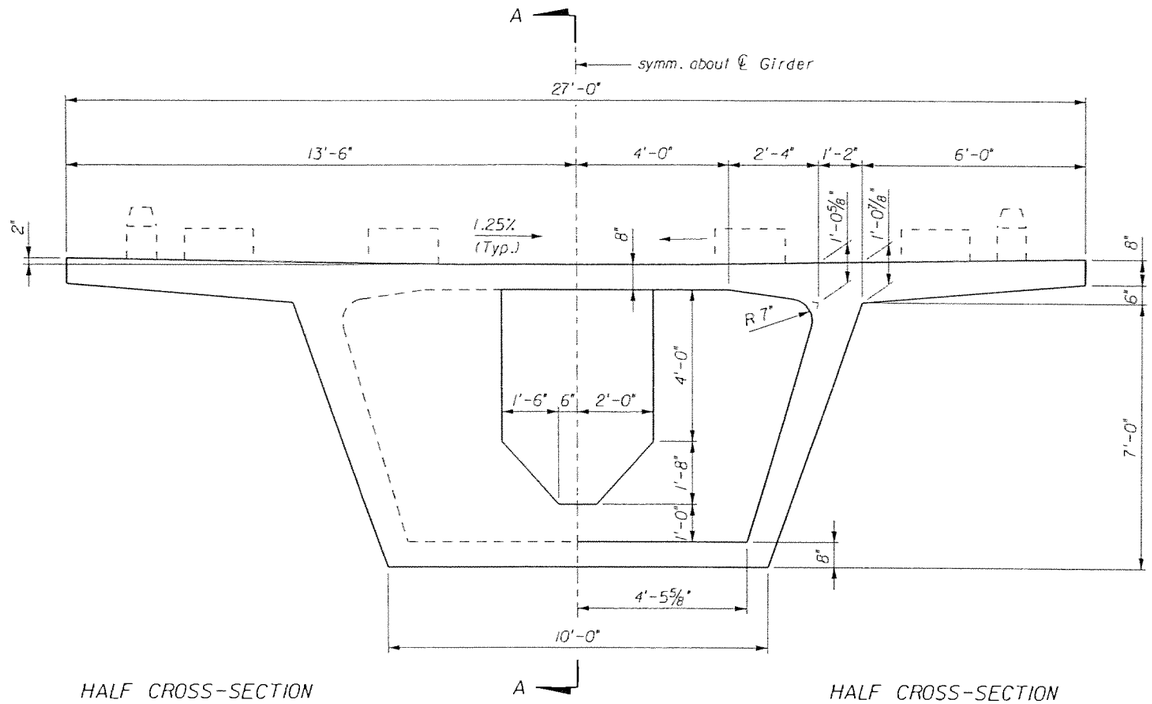

HALF CROSS-SECTION
MATCHCAST FACE

HALF CROSS-SECTION
TYPICAL FACE

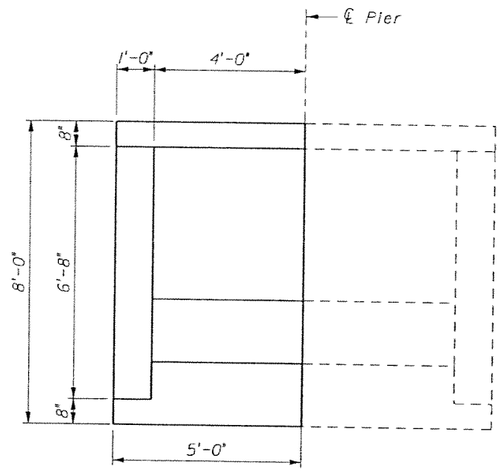

Typical Face

Matchcast Face

SECTION A-A

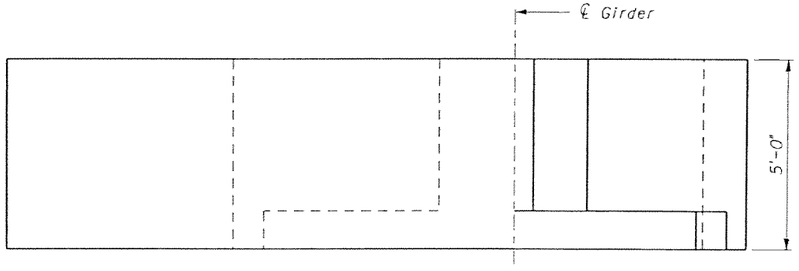

HALF PLAN TOP

HALF PLAN BOTTOM

GTH Designed by	1-Nov-05 Date					
JLS Drawn by	5-May-06 Date					
JER Checked by	5-May-06 Date					
TWS Approved by	5-May-06 Date	No.	Date	By / Chk	App.	Revisions

NORTH CORRIDOR METRORAIL EXTENSION - PRELIMINARY ENGINEERING (100% SUBMITTAL)

SUBJECT TO CHANGE

STRUCTURES - GUIDEWAY (CONCRETE)

MIAMI-DADE COUNTY

MIAMI-DADE TRANSIT

PARSONS
7600 CORPORATE CENTER DRIVE, SUITE 500
MIAMI, FLORIDA 33126
PHONE: (786) 464-1000 FAX: (786) 845-7119
CERTIFICATE OF AUTHORIZATION NO. 1838

PIER SEGMENT DIMENSIONS DUAL TRACK GUIDEWAY

Approved	Date	Approved	Date	Scale	Drawing	Sheet
				NTS	SGC- 137	348

5/5/2006 5:47:44 PM g:\648331_north_corridor\cadd\superst\pierseg_1.dgn

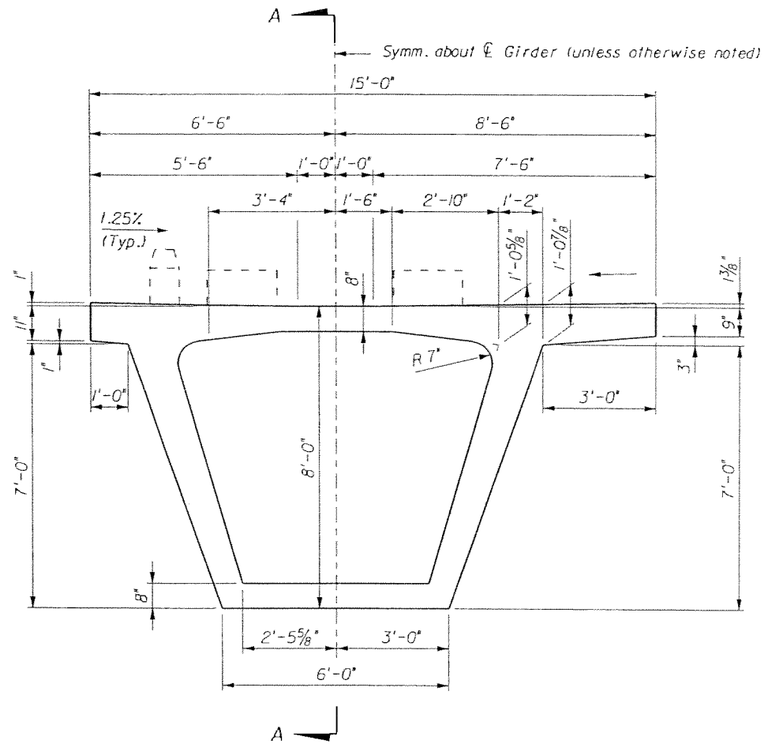

CROSS-SECTION

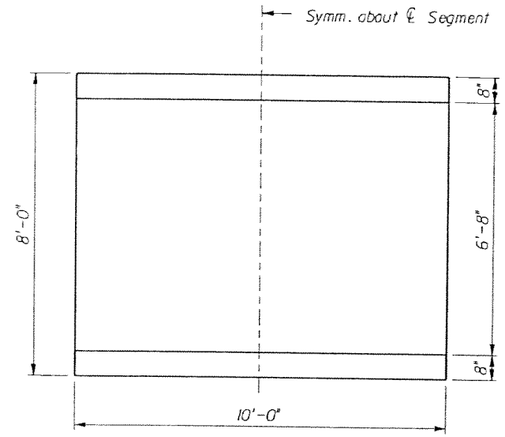

SECTION A-A

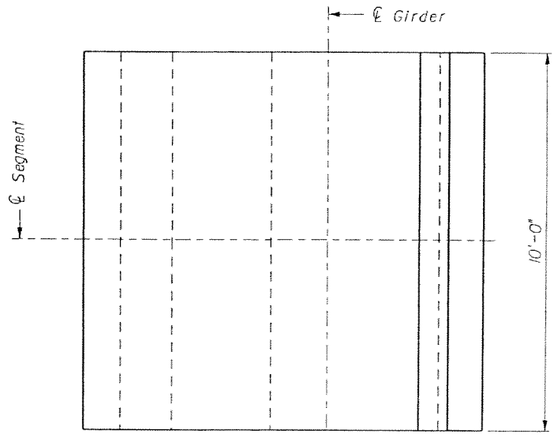

HALF PLAN TOP

HALF PLAN BOTTOM

GTH 1-Nov-05 Designed by Date						
JLS 5-May-06 Drawn by Date						
JER 5-May-06 Checked by Date						
TWS 5-May-06 Approved by Date	No.	Date	By / Chk	App.	Revisions	

NORTH CORRIDOR METRORAIL EXTENSION - PRELIMINARY ENGINEERING (100% SUBMITTAL)

SUBJECT TO CHANGE

STRUCTURES - GUIDEWAY (CONCRETE)

MIAMI-DADE COUNTY

MIAMI-DADE TRANSIT

PARSONS
7600 CORPORATE CENTER DRIVE, SUITE 500
MIAMI, FLORIDA 33126
PHONE: (786) 464-1000 FAX: (786) 845-7119
CERTIFICATE OF AUTHORIZATION NO. 1838

Approved | Date | Approved | Date

TYPICAL SEGMENT DIMENSIONS
SINGLE TRACK GUIDEWAY

Scale NTS | Drawing SGC- 138 | Sheet 349

5/8/2006 5:47:45 PM g:\648331_north_corridor\cadd\superstr\typseg_2.dgn

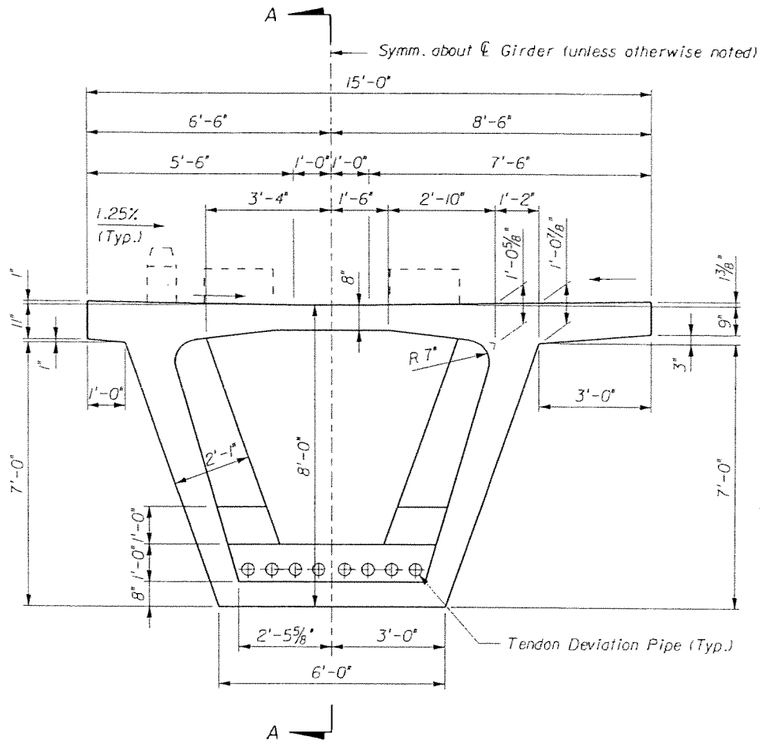

CROSS-SECTION

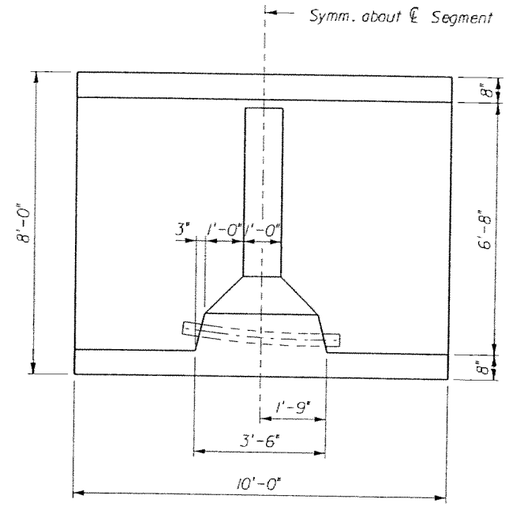

SECTION A-A

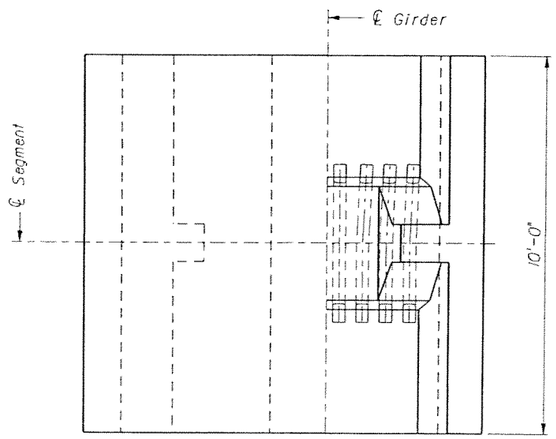

HALF PLAN TOP

HALF PLAN BOTTOM

GTH Designed by	1-Nov-05 Date					
JLS Drawn by	5-May-06 Date					
JER Checked by	5-May-06 Date					
TWS Approved by	5-May-06 Date	No.	Date	By / Chk	App.	Revisions

NORTH CORRIDOR METRORAIL EXTENSION - PRELIMINARY ENGINEERING (100% SUBMITTAL)

SUBJECT TO CHANGE

STRUCTURES - GUIDEWAY (CONCRETE)

MIAMI-DADE COUNTY

MIAMI-DADE TRANSIT

PARSONS
7600 CORPORATE CENTER DRIVE, SUITE 500
MIAMI, FLORIDA 33126
PHONE: (786) 464-1000 FAX: (786) 845-7119
CERTIFICATE OF AUTHORIZATION NO. 1838

DEVIATION SEGMENT DIMENSIONS
SINGLE TRACK GUIDEWAY

Approved	Date	Approved	Date	Scale	Drawing	Sheet
				NTS	SGC- 139	350

5/5/2006 5:47:48 PM g:\645331_north_corridor\cadd\superstr\deviationseg_2.dgn

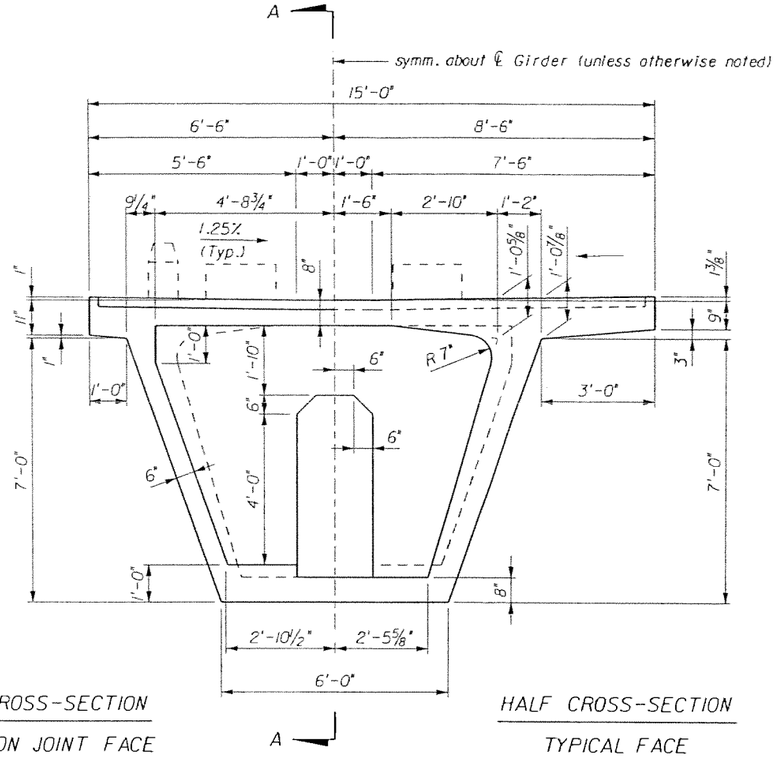

HALF CROSS-SECTION
EXPANSION JOINT FACE

HALF CROSS-SECTION
TYPICAL FACE

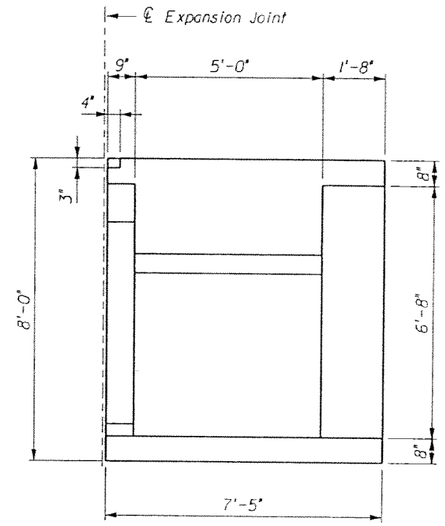

Expansion Joint Face

Typical Face

SECTION A-A

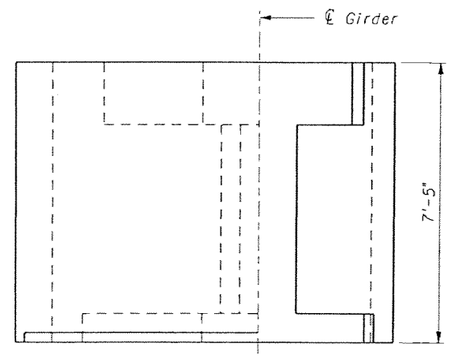

HALF PLAN TOP

HALF PLAN BOTTOM

GTH	1-Nov-05						
Designed by	Date						
JLS	5-May-06						
Drawn by	Date						
JER	5-May-06						
Checked by	Date						
TWS	5-May-06						
Approved by	Date	No.	Date	By / Chk	App.	Revisions	

NORTH CORRIDOR METRORAIL EXTENSION - PRELIMINARY ENGINEERING (100% SUBMITTAL)

SUBJECT TO CHANGE

STRUCTURES - GUIDEWAY (CONCRETE)

MIAMI-DADE COUNTY

MIAMI-DADE TRANSIT

PARSONS
7600 CORPORATE CENTER DRIVE, SUITE 500
MIAMI, FLORIDA 33126
PHONE: (786) 464-1000 FAX: (786) 845-7119
CERTIFICATE OF AUTHORIZATION NO. 1638

Approved | Date

Approved | Date

EXPANSION JOINT SEGMENT DIMENSIONS
SINGLE TRACK GUIDEWAY

Scale: NTS | Drawing: SGC- 140 | Sheet: 351

5/8/2006 5:47:47 PM g:\646331_north_corridor\cadd\superstr\expansionseg_2.dgn

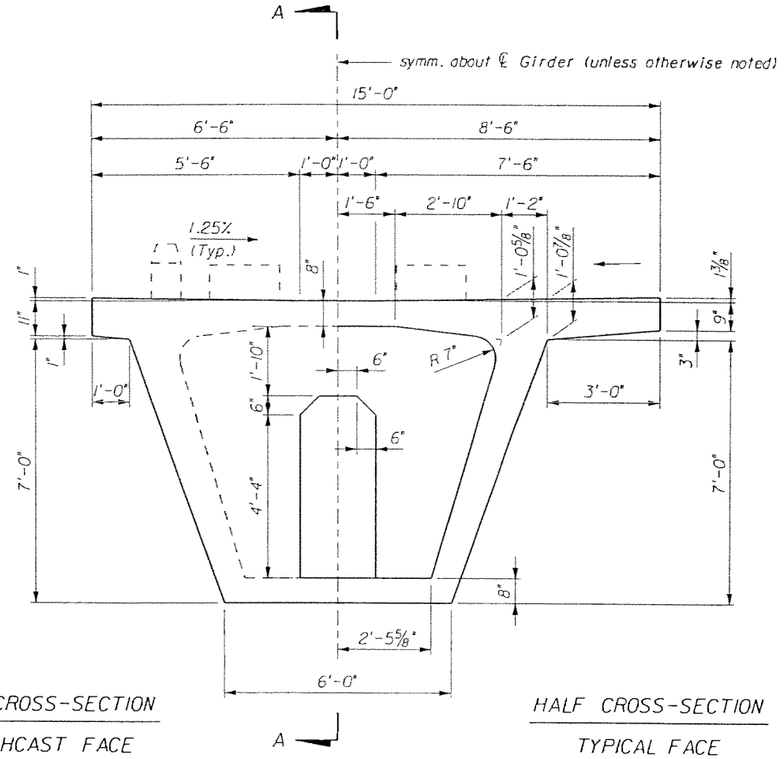

HALF CROSS-SECTION
MATCHCAST FACE

HALF CROSS-SECTION
TYPICAL FACE

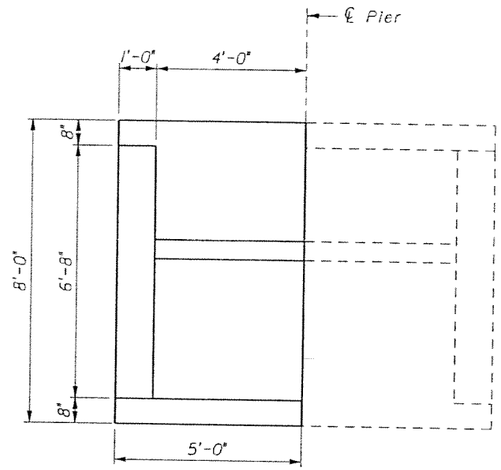

Typical Face

Matchcast Face

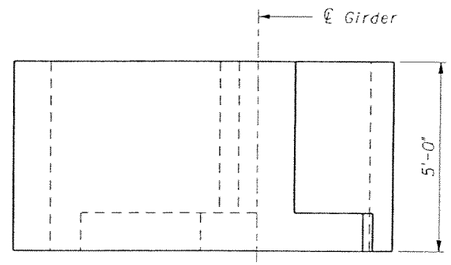

HALF PLAN TOP

HALF PLAN BOTTOM

GTH	1-Nov-05						
Designed by	Date						
JLS	5-May-06						
Drawn by	Date						
JER	5-May-06						
Checked by	Date						
TWS	5-May-06						
Approved by	Date	No.	Date	By / Chk	App.	Revisions	

NORTH CORRIDOR METRORAIL EXTENSION - PRELIMINARY ENGINEERING (100% SUBMITTAL)

SUBJECT TO CHANGE

STRUCTURES - GUIDEWAY (CONCRETE)

MIAMI-DADE COUNTY

MIAMI-DADE TRANSIT

PARSONS
7600 CORPORATE CENTER DRIVE, SUITE 500
MIAMI, FLORIDA 33126
PHONE: (786) 464-1000 FAX: (786) 845-7119
CERTIFICATE OF AUTHORIZATION NO. 1838

PIER SEGMENT
DIMENSIONS
SINGLE TRACK GUIDEWAY

Approved	Date	Approved	Date	Scale	Drawing	Sheet
				NTS	SGC- 141	352

5/8/2006 5:47:48 PM g:\646331_north_corridor\kcadd\superstr\pierseg_2.dgn

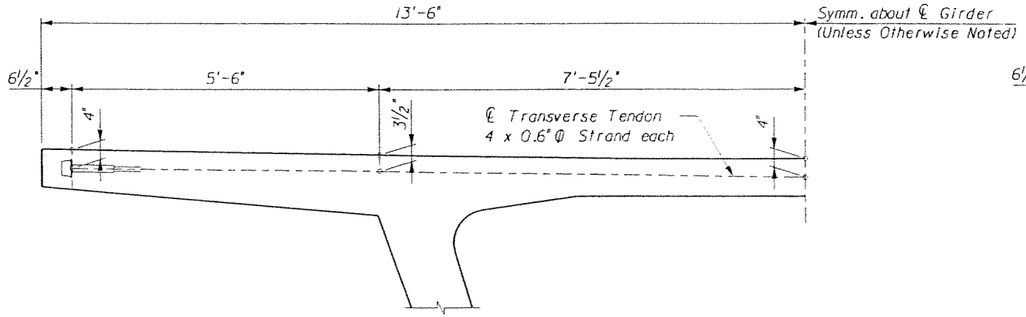

HALF CROSS-SECTION

(Dual Track Typical Segments)

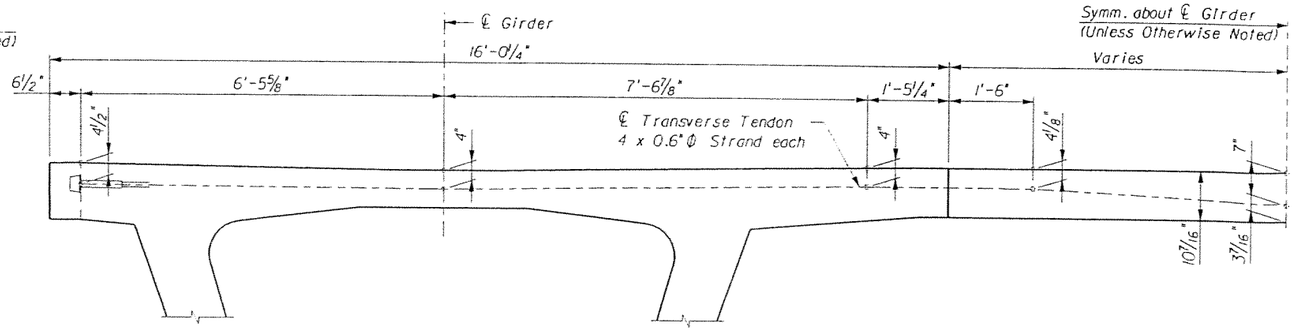

HALF CROSS-SECTION

(Single Track Crossover Segments)

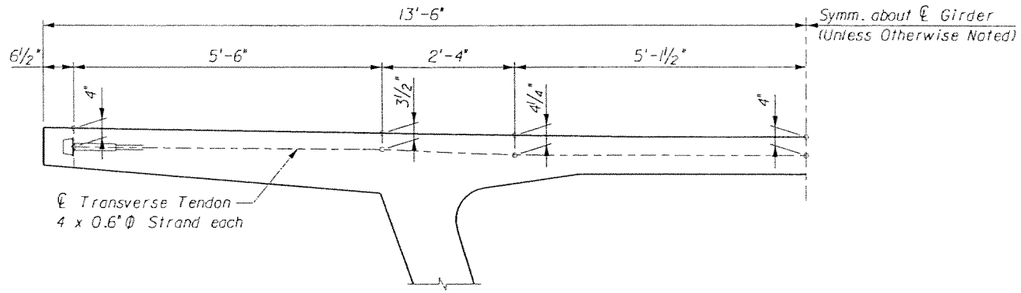

HALF CROSS-SECTION

(Dual Track Pier Segments)

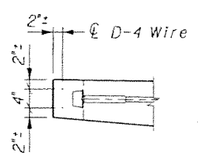

PARTIAL ELEVATION

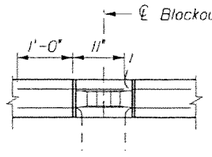

END VIEW

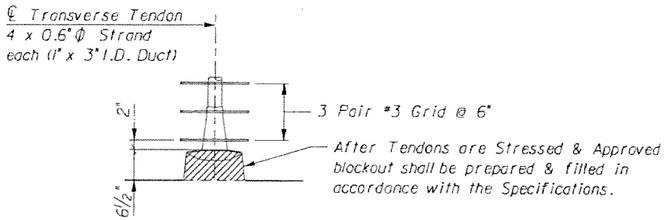

PLAN

D-4 WIRE DETAIL

NOTES:

1. All Tendons shall be single end stressed.
2. Dimensions given in cross sections are to transverse tendons P.I. points.
3. Minimum bending radius for all tendons, shall be 20'-0"

GTH Designed by 1-Nov-05 Date						
JLS Drawn by 5-May-06 Date						
JER Checked by 5-May-06 Date						
TWS Approved by 5-May-06 Date	No.	Date	By / Chk	App.	Revisions	

NORTH CORRIDOR METRORAIL EXTENSION - PRELIMINARY ENGINEERING (100% SUBMITTAL)

SUBJECT TO CHANGE

STRUCTURES - GUIDEWAY (CONCRETE)

MIAMI-DADE COUNTY

MIAMI-DADE TRANSIT

PARSONS
7800 CORPORATE CENTER DRIVE, SUITE 500
MIAMI, FLORIDA 33126
PHONE: (786) 464-1000 FAX: (786) 845-7119
CERTIFICATE OF AUTHORIZATION NO. 1838

TRANSVERSE P.T. DETAILS

Approved / Date

Approved / Date

Scale NTS | Drawing SGC- 142 | Sheet 353

5/8/2006 5:47:50 PM g:\646331_north_corridor\cadd\superstr\transpldetails.dgn

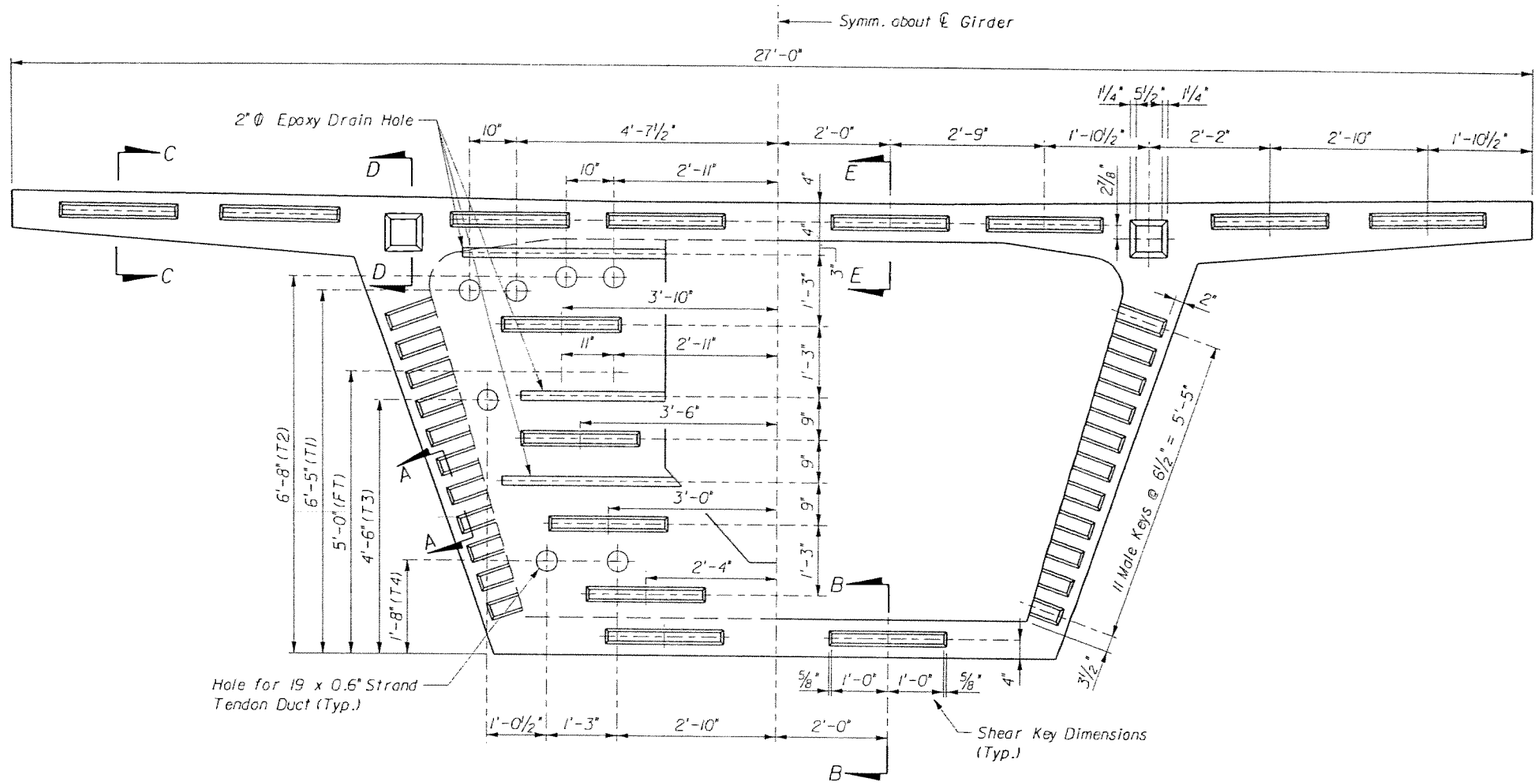

HALF ELEVATION
PIER SEGMENT

HALF ELEVATION
TYPICAL SEGMENT

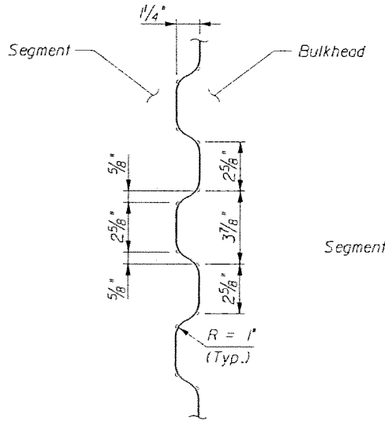

SECTION A-A

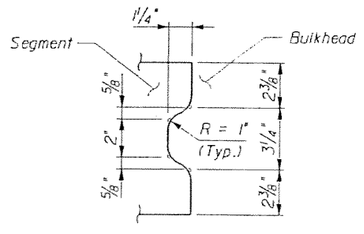

SECTION B-B

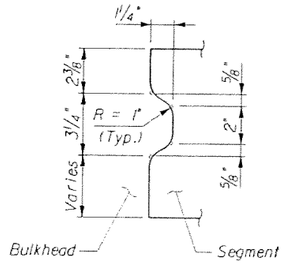

SECTION C-C

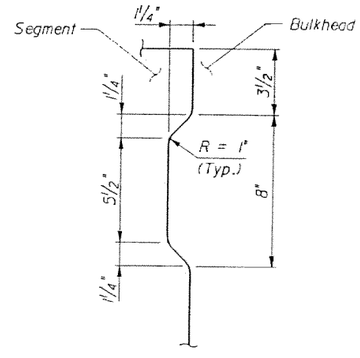

SECTION D-D

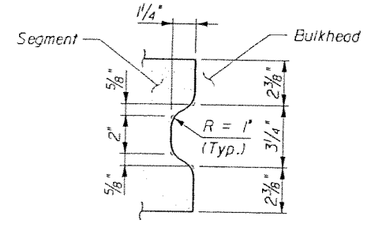

SECTION E-E

GTH Designed by	1-Nov-05 Date					
JLS Drawn by	5-May-06 Date					
JER Checked by	5-May-06 Date					
TWS Approved by	5-May-06 Date	No.	Date	By / Chk	App.	Revisions

NORTH CORRIDOR METRORAIL EXTENSION - PRELIMINARY ENGINEERING (100% SUBMITTAL)

SUBJECT TO CHANGE

STRUCTURES - GUIDEWAY (CONCRETE)

MIAMI-DADE COUNTY

MIAMI-DADE TRANSIT

PARSONS
7600 CORPORATE CENTER DRIVE, SUITE 500
MIAMI, FLORIDA 33126
PHONE: (786) 464-1000 FAX: (786) 845-7119
CERTIFICATE OF AUTHORIZATION NO. 1838

Approved | Date | Approved | Date

BULKHEAD AND SHEAR KEY DETAILS
DUAL TRACK GUIDEWAY

Scale NTS | Drawing SGC- 143 | Sheet 354

5/8/2006 5:47:52 PM g:\646331_north_corridor\cadd\superst\typseg_1_shearkeys.dgn

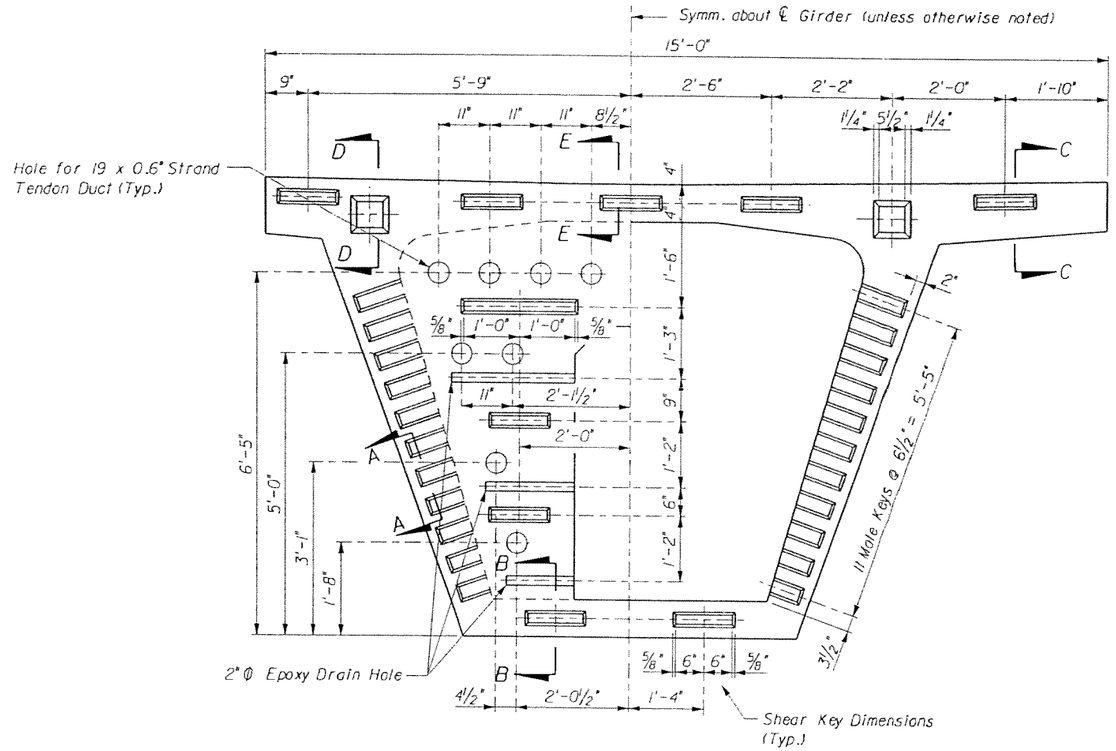

HALF ELEVATION
PIER SEGMENT

HALF ELEVATION
TYPICAL SEGMENT

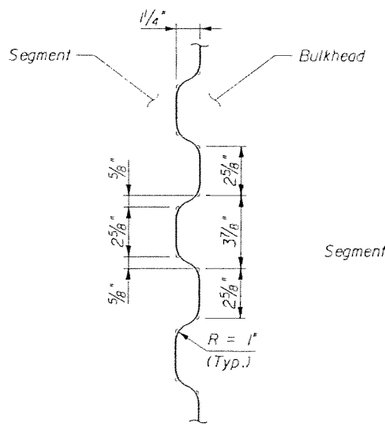

SECTION A-A

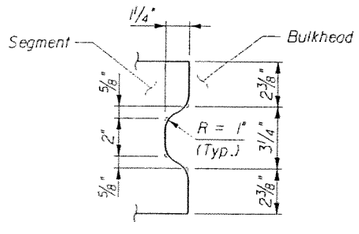

SECTION B-B

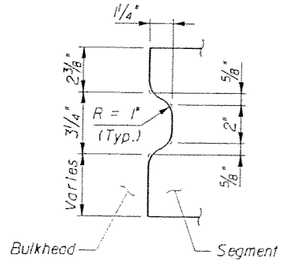

SECTION C-C

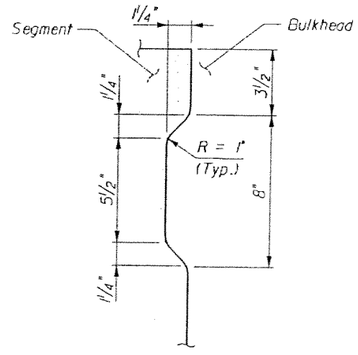

SECTION D-D

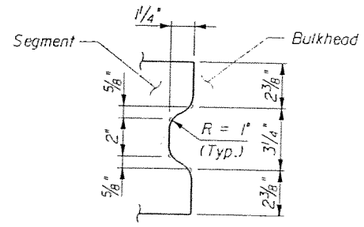

SECTION E-E

SUBJECT TO CHANGE

NORTH CORRIDOR METRORAIL EXTENSION - PRELIMINARY ENGINEERING (100% SUBMITTAL)

STRUCTURES - GUIDEWAY (CONCRETE)

BULKHEAD AND SHEAR KEY DETAILS
SINGLE TRACK GUIDEWAY

GTH	1-Nov-05				
Designed by	Date				
JLS	5-May-06				
Drawn by	Date				
JER	5-May-06				
Checked by	Date				
TWS	5-May-06				
Approved by	Date	No.	Date	By / Chk	App.

Revisions

MIAMI-DADE COUNTY

MIAMI-DADE TRANSIT

PARSONS
7600 CORPORATE CENTER DRIVE, SUITE 500
MIAMI, FLORIDA 33126
PHONE: (786) 464-1000 FAX: (786) 845-7119
CERTIFICATE OF AUTHORIZATION NO. 1836

Approved | Date | Approved | Date

Scale NTS | Drawing SGC- 144 | Sheet 355

5/8/2006 5:47:54 PM g:\646331_north_corridor\cadd\supers\typseg_2_shearkeys.dgn

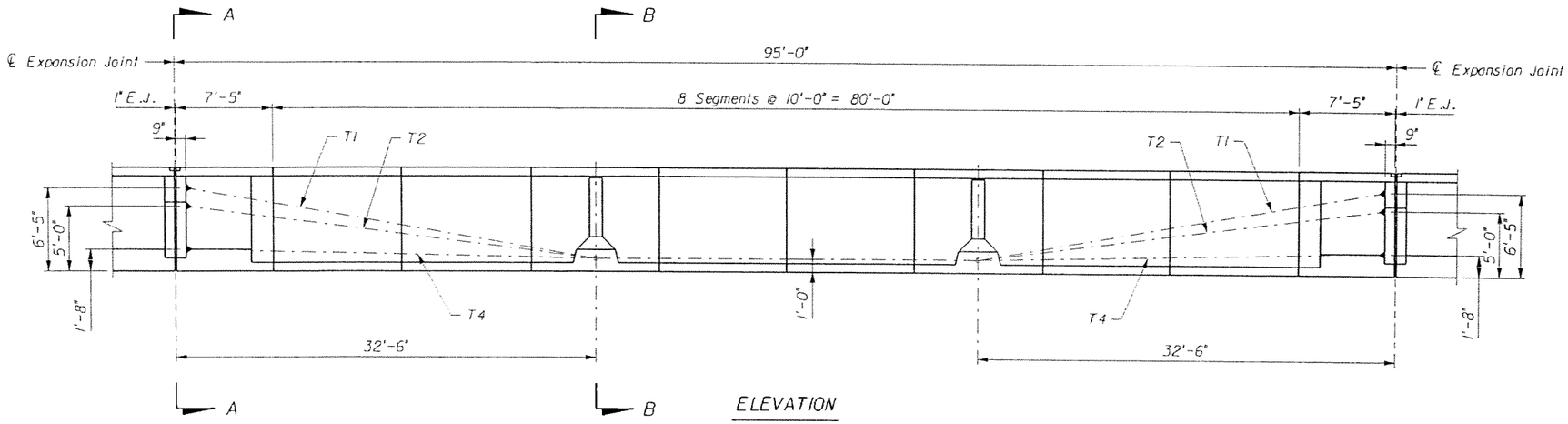

ELEVATION

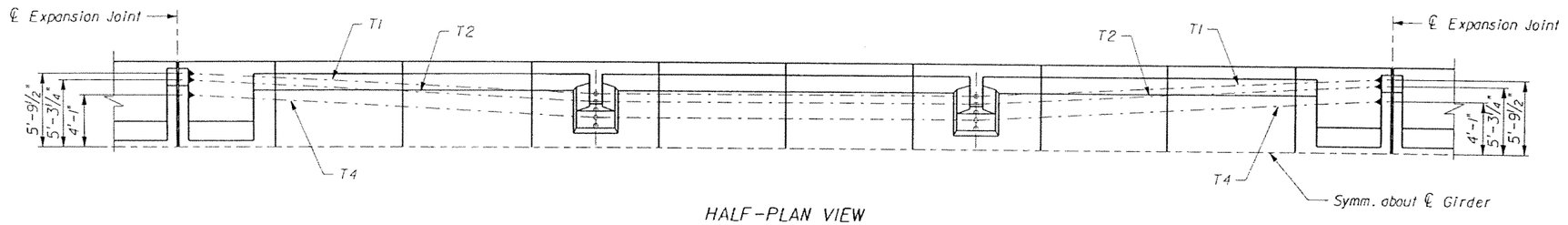

HALF-PLAN VIEW

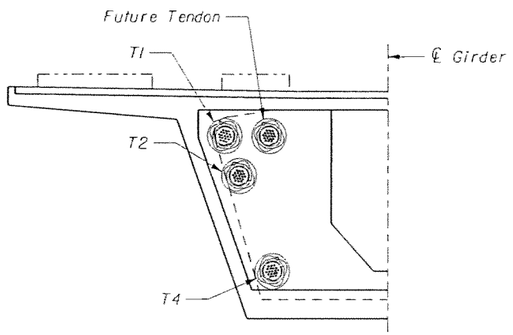

SECTION A-A

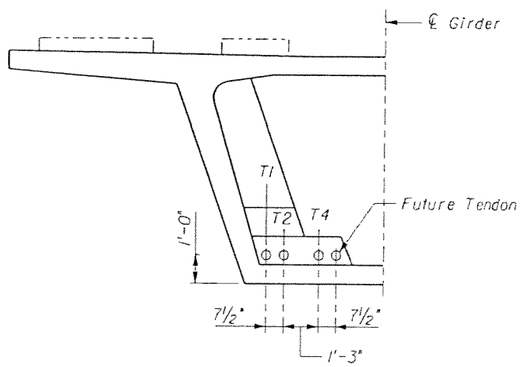

SECTION B-B

NOTES:

1. All dimensions are along ℄ Girder (unless otherwise noted).
2. Tendon T1 is a 19 x 0.6"Φ strand tendon.
   Tendons T2 and T4 are 12 x 0.6"Φ strand tendons.

SUBJECT TO CHANGE

GTH Designed by	1-Nov-05 Date					
JMH Drawn by	5-May-06 Date					
JER Checked by	5-May-06 Date					
TWS Approved by	5-May-06 Date	No.	Date	By / Chk	App.	Revisions

NORTH CORRIDOR METRORAIL EXTENSION - PRELIMINARY ENGINEERING (100% SUBMITTAL)

MIAMI-DADE COUNTY

MIAMI-DADE TRANSIT

PARSONS
7600 CORPORATE CENTER DRIVE, SUITE 500
MIAMI, FLORIDA 33126
PHONE: (786) 464-1000 FAX: (786) 845-7119
CERTIFICATE OF AUTHORIZATION NO. 1838

Approved | Date

Approved | Date

5/8/2006 5:47:55 PM g:\646331_north_corridor\cadd\superstr\pt\layout_pt_95.dgn

STRUCTURES - GUIDEWAY (CONCRETE)

95'-0" SPAN P.T. LAYOUT
DUAL TRACK GUIDEWAY

Scale NTS | Drawing SGC- 145 | Sheet 356

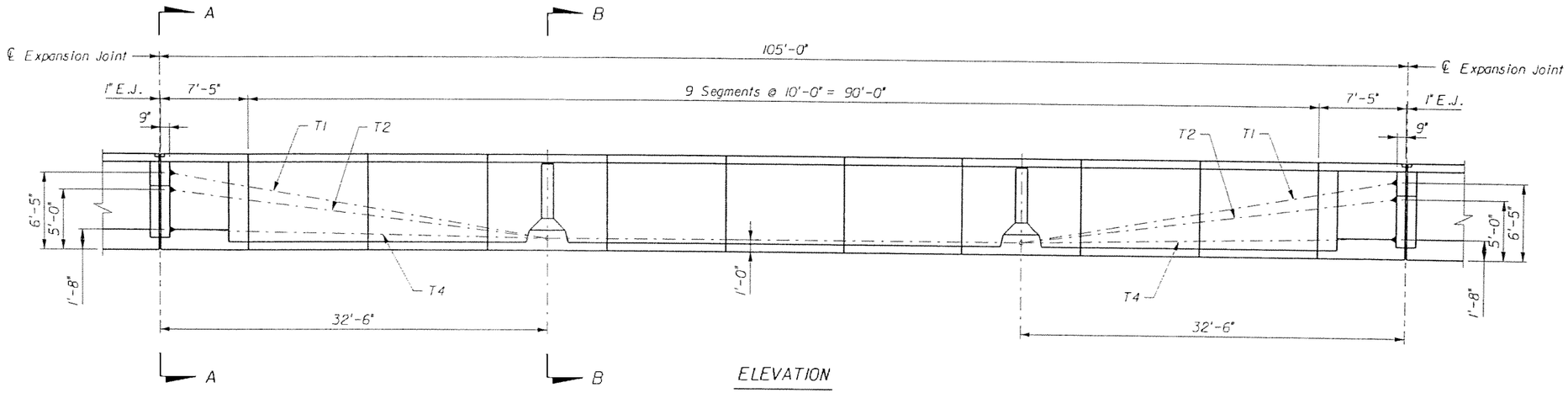

ELEVATION

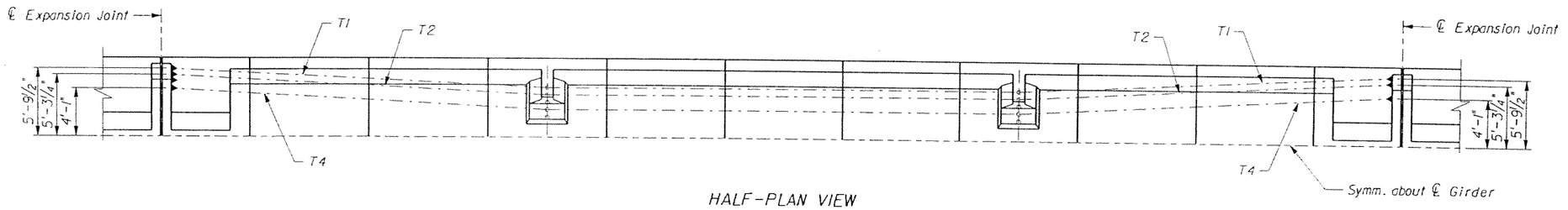

HALF-PLAN VIEW

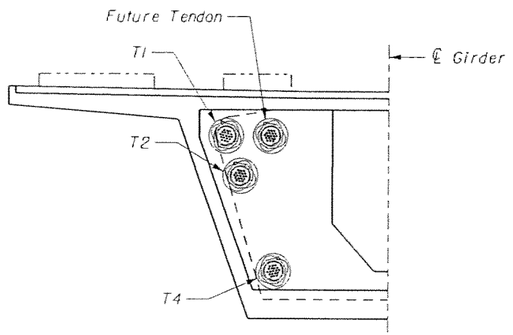

SECTION A-A

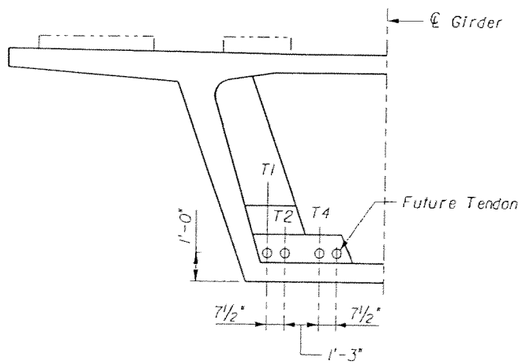

SECTION B-B

NOTES:

1. All dimensions are along ℄ Girder (unless otherwise noted).
2. Tendons T1 and T2 are 19 x 0.6"Ø strand tendons.
   Tendon T4 is a 12 x 0.6"Ø strand tendon.

GTH	1-Nov-05					
Designed by	Date					
JMH	5-May-06					
Drawn by	Date					
JER	5-May-06					
Checked by	Date					
TWS	5-May-06					
Approved by	Date	No.	Date	By / Chk	App.	Revisions

NORTH CORRIDOR METRORAIL EXTENSION - PRELIMINARY ENGINEERING (100% SUBMITTAL)

SUBJECT TO CHANGE

STRUCTURES - GUIDEWAY (CONCRETE)

MIAMI-DADE COUNTY

MIAMI-DADE TRANSIT

PARSONS
7600 CORPORATE CENTER DRIVE, SUITE 500
MIAMI, FLORIDA 33126
PHONE: (786) 464-1000 FAX: (786) 845-7119
CERTIFICATE OF AUTHORIZATION NO. 1838

Approved	Date	Approved	Date
			5/8/2006 5:47:57 PM

105'-0" SPAN P.T. LAYOUT
DUAL TRACK GUIDEWAY

Scale	Drawing	Sheet
NTS	SGC- 146	357

g:\646331_north_corridor\cadd\superstr\ptlayout_dt_105.dgn

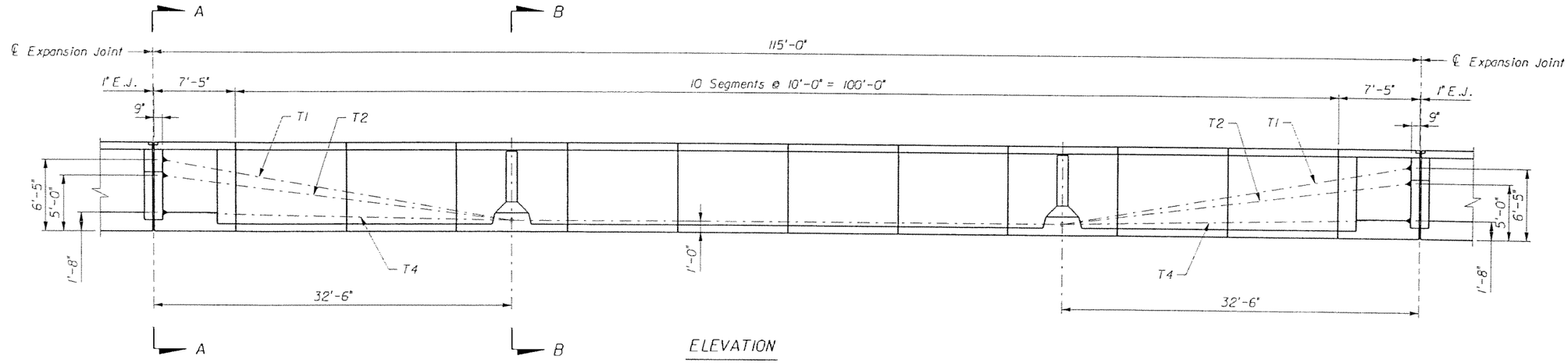

ELEVATION

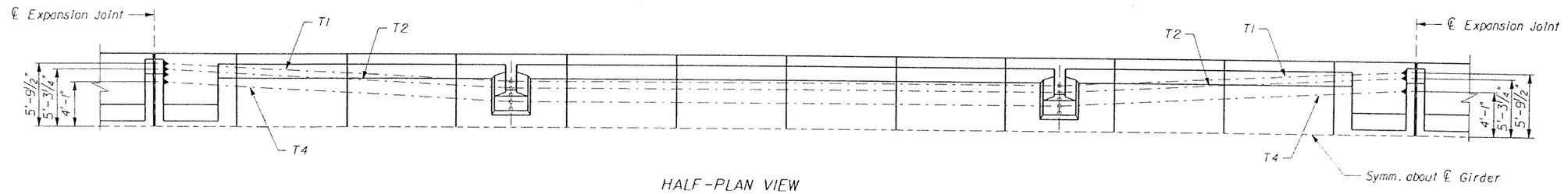

HALF-PLAN VIEW

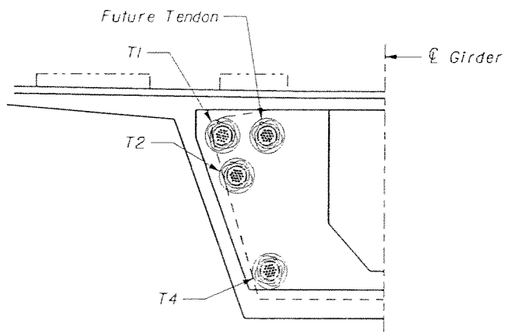

SECTION A-A

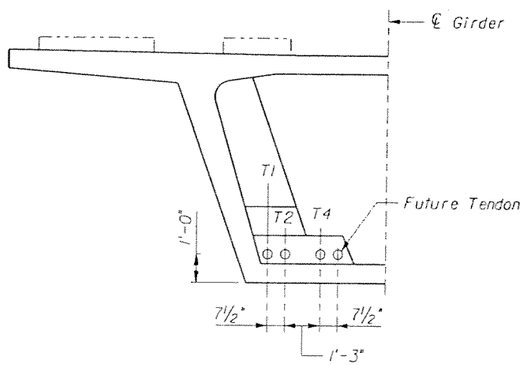

SECTION B-B

NOTES:

1. All dimensions are along ℄ Girder (unless otherwise noted).
2. Tendons T1, T2 and T3 are 19 x 0.6"Φ strand tendons.

GTH Designed by	1-Nov-05 Date					
JMH Drawn by	5-May-06 Date					
JER Checked by	5-May-06 Date					
TWS Approved by	5-May-06 Date	No.	Date	By / Chk	App.	Revisions

NORTH CORRIDOR METRORAIL EXTENSION - PRELIMINARY ENGINEERING (100% SUBMITTAL)

MIAMI-DADE COUNTY

MIAMI-DADE TRANSIT

PARSONS
7600 CORPORATE CENTER DRIVE, SUITE 500
MIAMI, FLORIDA 33126
PHONE: (786) 464-1000 FAX: (786) 845-7119
CERTIFICATE OF AUTHORIZATION NO. 1838

Approved | Date | Approved | Date

SUBJECT TO CHANGE

STRUCTURES - GUIDEWAY (CONCRETE)

115'-0" SPAN P.T. LAYOUT
DUAL TRACK GUIDEWAY

Scale NTS | Drawing SGC- 147 | Sheet 358

5/8/2006 5:47:58 PM g:\646331_north_corridor\cadd\superst\pt\layout_dt_115.dgn

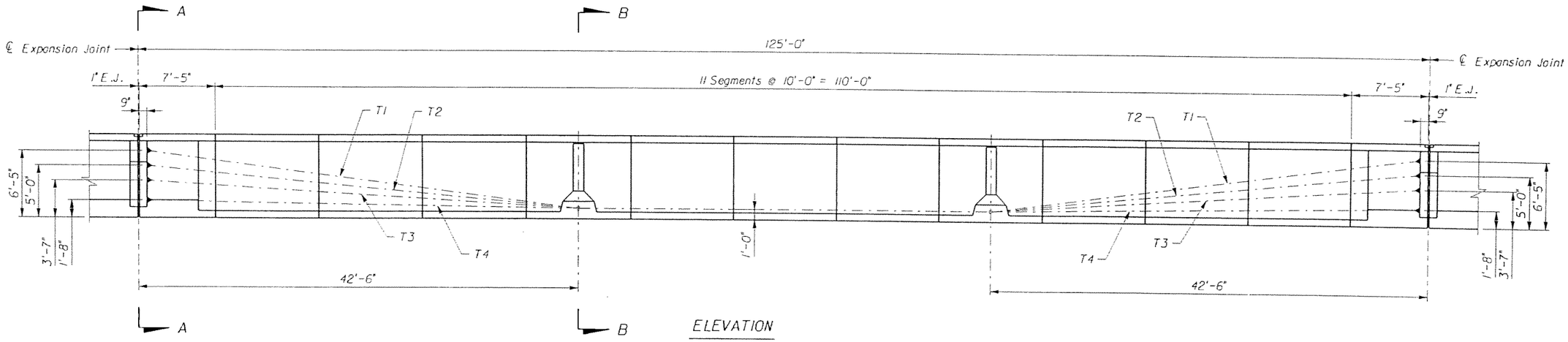

ELEVATION

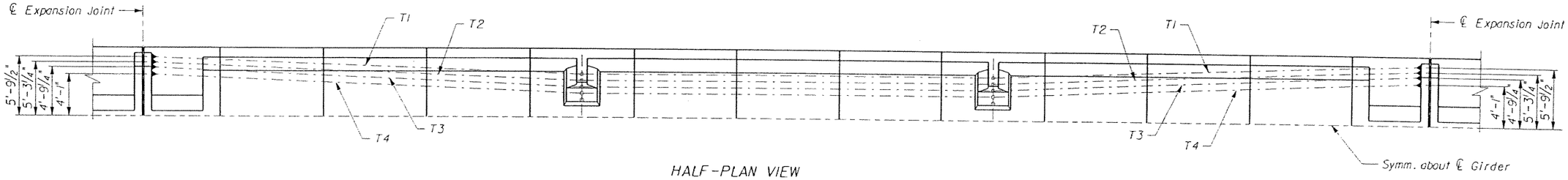

HALF-PLAN VIEW

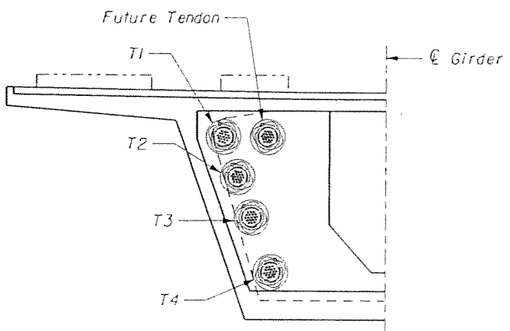

SECTION A-A

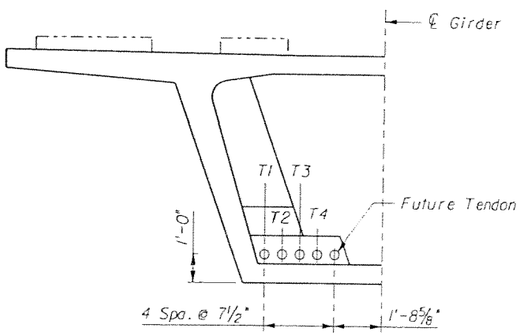

SECTION B-B

NOTES:

1. All dimensions are along ℄ Girder (unless otherwise noted).
2. Tendons T1 and T2 are 19 x 0.6"Ø strand tendons.
   Tendons T3 and T4 are 12 x 0.6"Ø strand tendons.

GTH Designed by	1-Nov-05 Date					
JMH Drawn by	5-May-06 Date					
JER Checked by	5-May-06 Date					
TWS Approved by	5-May-06 Date	No.	Date	By / Chk	App.	Revisions

NORTH CORRIDOR METRORAIL EXTENSION - PRELIMINARY ENGINEERING (100% SUBMITTAL)

MIAMI-DADE COUNTY

MIAMI-DADE TRANSIT

PARSONS
7600 CORPORATE CENTER DRIVE, SUITE 500
MIAMI, FLORIDA 33126
PHONE: (786) 464-1000 FAX: (786) 845-7119
CERTIFICATE OF AUTHORIZATION NO. 1638

Approved | Date | Approved | Date

SUBJECT TO CHANGE

STRUCTURES - GUIDEWAY (CONCRETE)

125'-0" SPAN P.T. LAYOUT
DUAL TRACK GUIDEWAY

Scale NTS | Drawing SGC- 148 | Sheet 359

5/8/2006 5:48:00 PM g:\646331_north_corridor\cadd\superstr\ptlayout_dt_125.dgn

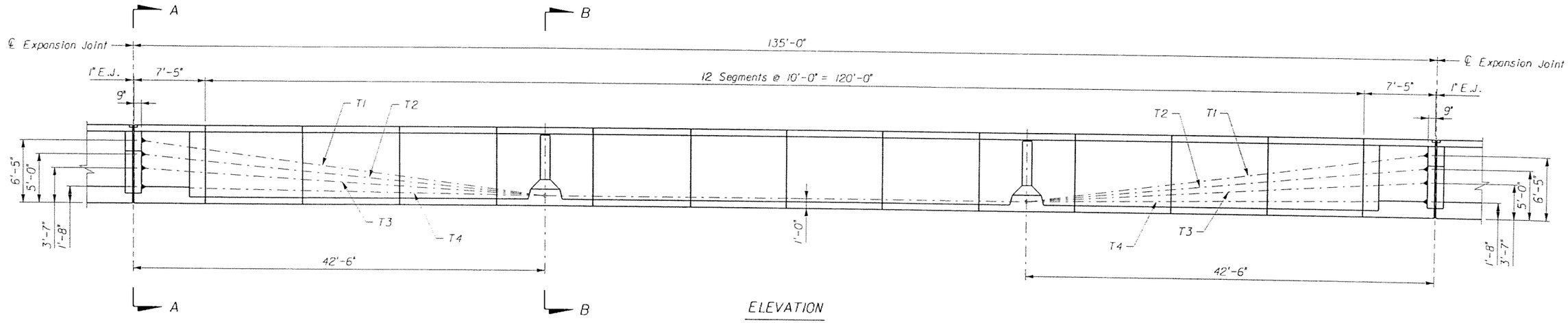

ELEVATION

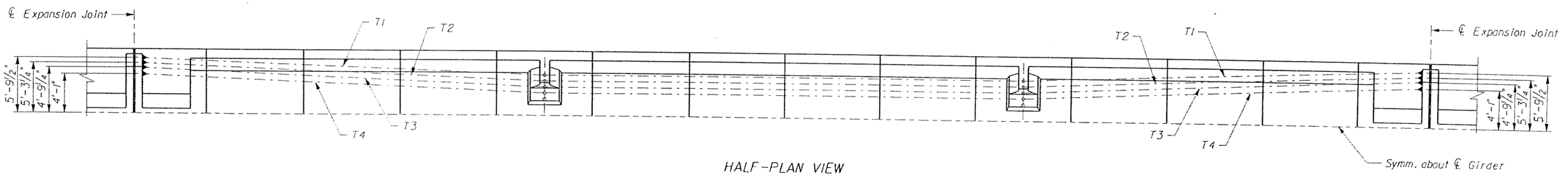

HALF-PLAN VIEW

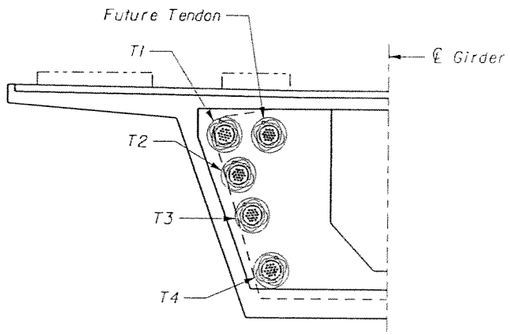

SECTION A-A

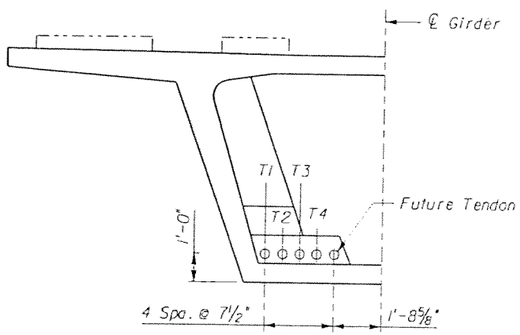

SECTION B-B

NOTES:

1. All dimensions are along ℄ Girder (unless otherwise noted).
2. Tendons T1, T2 and T3 are 19 x 0.6"Ø strand tendons. Tendon T4 is a 12 x 0.6"Ø strand tendon.

GTH Designed by	1-Nov-05 Date					
JMH Drawn by	5-May-06 Date					
JER Checked by	5-May-06 Date					
TWS Approved by	5-May-06 Date	No.	Date	By / Chk	App.	Revisions

NORTH CORRIDOR METRORAIL EXTENSION - PRELIMINARY ENGINEERING (100% SUBMITTAL)

MIAMI-DADE COUNTY

MIAMI-DADE TRANSIT

PARSONS
7600 CORPORATE CENTER DRIVE, SUITE 500
MIAMI, FLORIDA 33126
PHONE: (786) 464-1000 FAX: (786) 845-7119
CERTIFICATE OF AUTHORIZATION NO. 1838

Approved | Date | Approved | Date

SUBJECT TO CHANGE

STRUCTURES - GUIDEWAY (CONCRETE)

135'-0" SPAN P.T. LAYOUT
DUAL TRACK GUIDEWAY

Scale NTS | Drawing SGC- 149 | Sheet 360

5/8/2006 5:48:02 PM g:\646331_north_corridor\cadd\superstr\pt\layout_dt_135.dgn

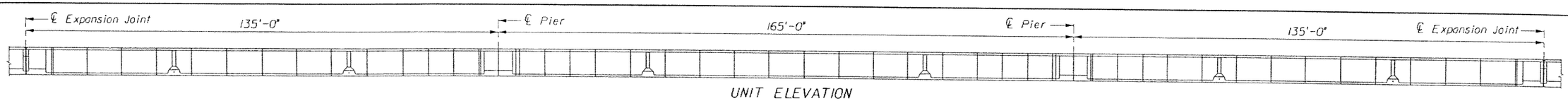

UNIT ELEVATION

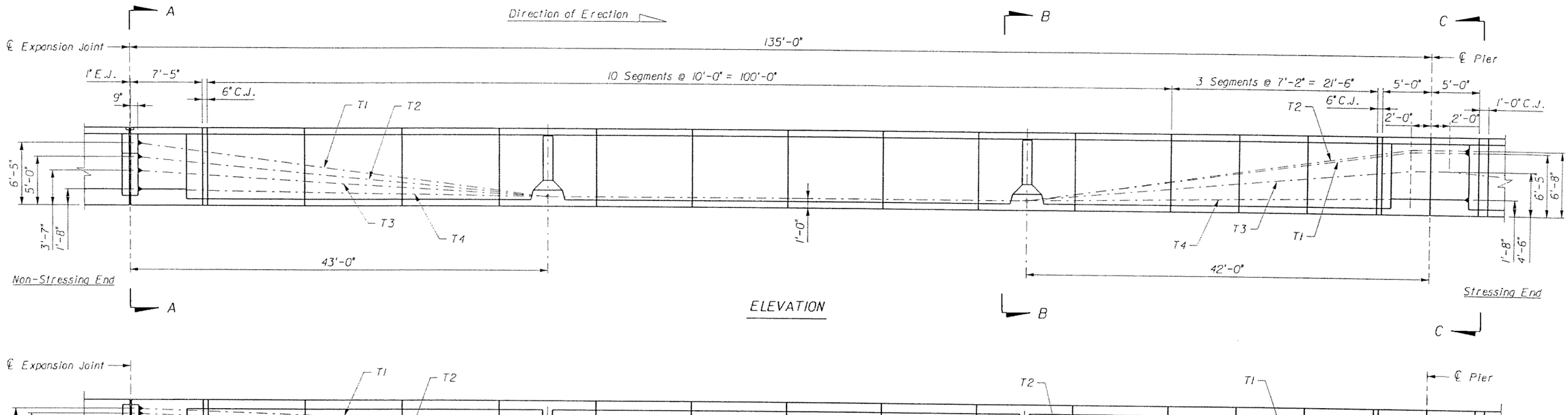

ELEVATION

HALF-PLAN VIEW

SECTION A-A

SECTION B-B

SECTION C-C

NOTES:

1. All dimensions are along ℄ Girder (unless otherwise noted).
2. Tendons T1, T3 and T4 are 19 x 0.6"Ø strand tendons. Tendon T2 is a 12 x 0.6"Ø strand tendon.

GTH Designed by	1-Nov-05 Date					
AHQ Drawn by	5-May-06 Date					
JER Checked by	5-May-06 Date					
TWS Approved by	5-May-06 Date	No.	Date	By / Chk	App.	Revisions

NORTH CORRIDOR METRORAIL EXTENSION - PRELIMINARY ENGINEERING (100% SUBMITTAL)

SUBJECT TO CHANGE

STRUCTURES - GUIDEWAY (CONCRETE)

MIAMI-DADE COUNTY

MIAMI-DADE TRANSIT

PARSONS
7600 CORPORATE CENTER DRIVE, SUITE 500
MIAMI, FLORIDA 33126
PHONE: (786) 454-1000 FAX: (786) 845-7119
CERTIFICATE OF AUTHORIZATION NO. 1838

Approved | Date | Approved | Date

CONTINUOUS UNIT TYPE 1
P.T. LAYOUT 1
DUAL TRACK GUIDEWAY

Scale NTS | Drawing SGC- 150 | Sheet 361

5/5/2006 5:48:03 PM g:\546331_north_corridor\cadd\superstr\pt\layout_dt_cont unit-1.dgn

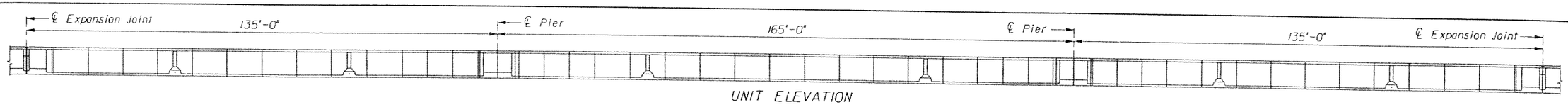

UNIT ELEVATION

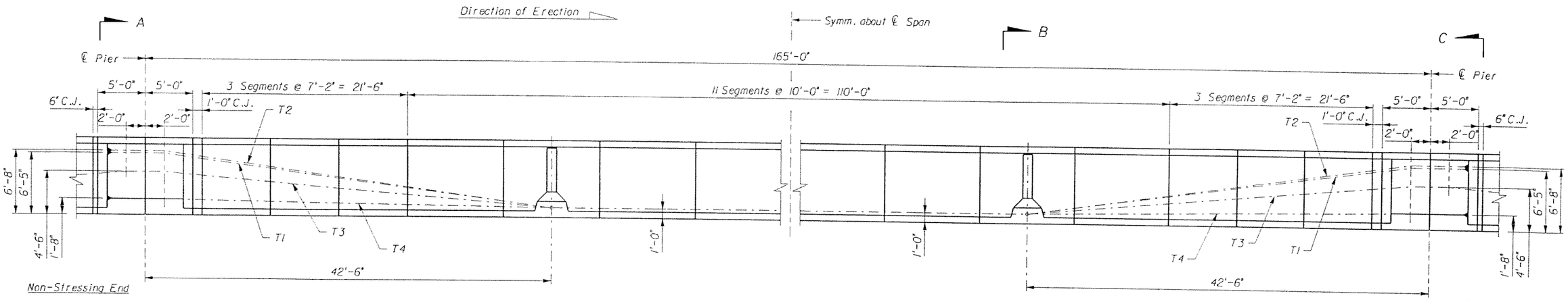

ELEVATION

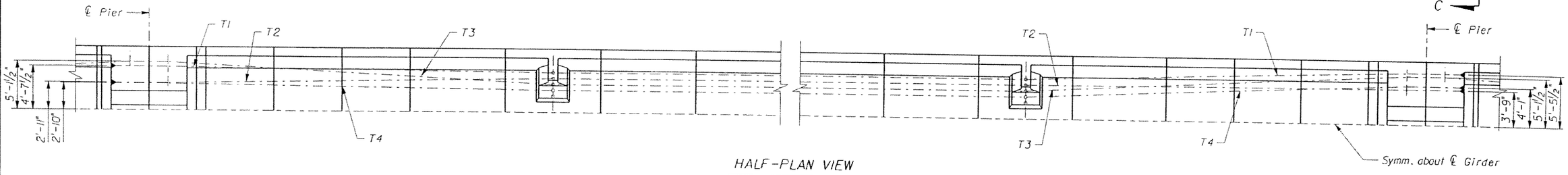

HALF-PLAN VIEW

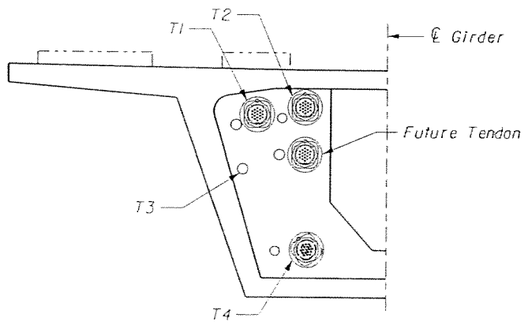

SECTION A-A

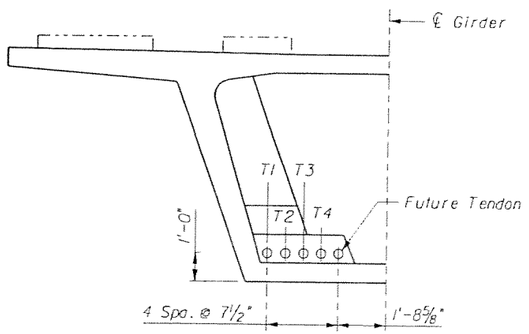

SECTION B-B

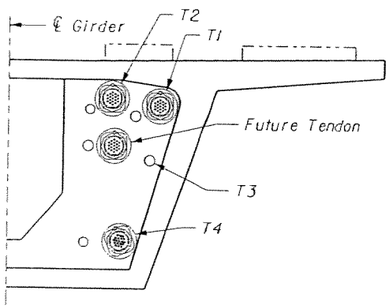

SECTION C-C

NOTES:

1. All dimensions are along ℄ Girder (unless otherwise noted).
2. Tendons T1, T2, T3 and T4 are 19 x 0.6"Ø strand tendons.

GTH 1-Nov-05 Designed by Date						
AHQ 5-May-06 Drawn by Date						
JER 5-May-06 Checked by Date						
TWS 5-May-06 Approved by Date	No.	Date	By / Chk.	App.	Revisions	

NORTH CORRIDOR METRORAIL EXTENSION - PRELIMINARY ENGINEERING (100% SUBMITTAL)

SUBJECT TO CHANGE

STRUCTURES - GUIDEWAY (CONCRETE)

MIAMI-DADE COUNTY

MIAMI-DADE TRANSIT

PARSONS
7600 CORPORATE CENTER DRIVE, SUITE 500
MIAMI, FLORIDA 33126
PHONE: (786) 464-1000 FAX: (786) 845-7119
CERTIFICATE OF AUTHORIZATION NO. 1838

Approved Date

Approved Date

CONTINUOUS UNIT TYPE 1
P.T. LAYOUT 2
DUAL TRACK GUIDEWAY

Scale NTS | Drawing SGC- 151 | Sheet 362

5/8/2006 5:48:05 PM g:\646331_north_corridor\cadd\superstr\playout_dt_cont unit-2.dgn

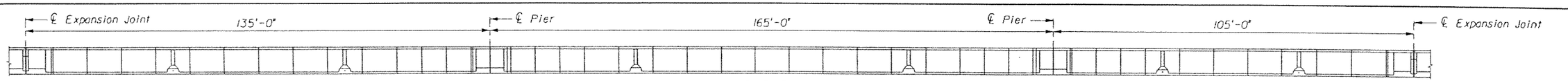

UNIT ELEVATION

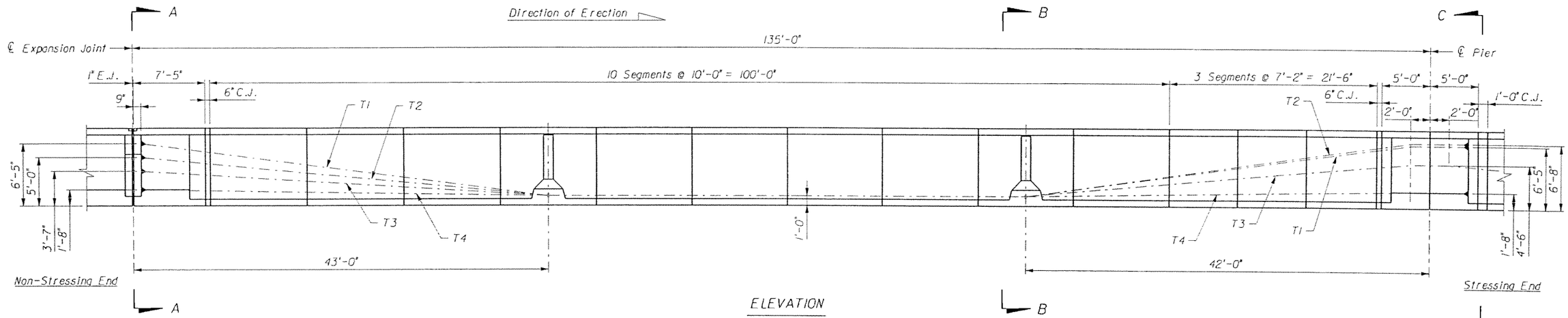

ELEVATION

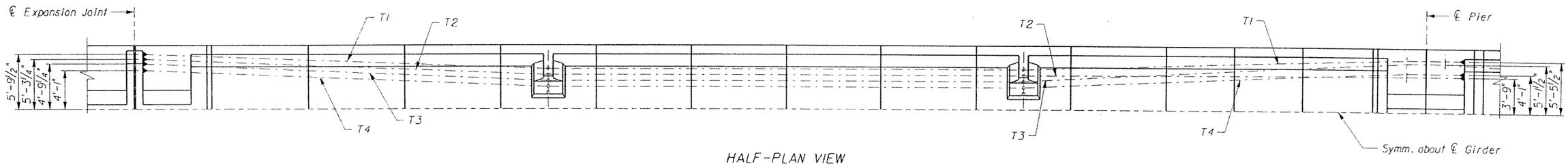

HALF-PLAN VIEW

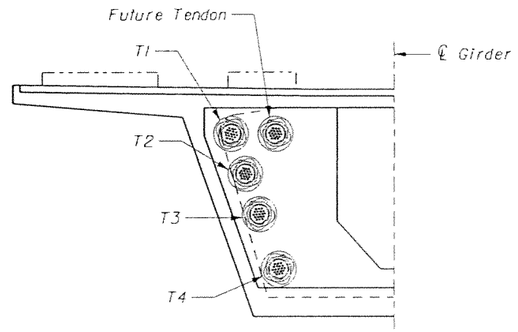

SECTION A-A

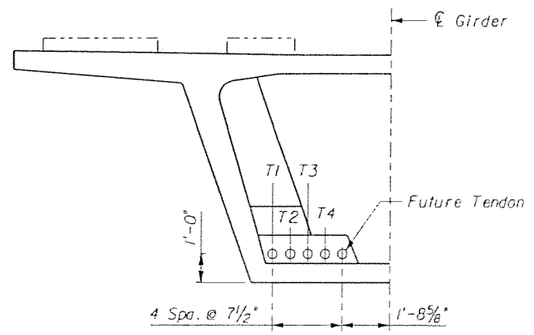

SECTION B-B

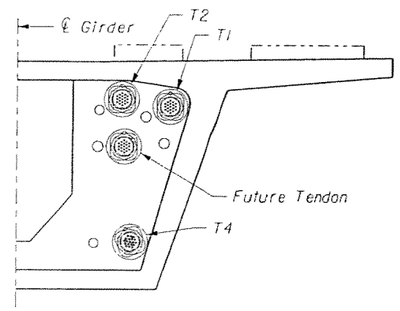

SECTION C-C

NOTES:

1. All dimensions are along ℄ Girder (unless otherwise noted).
2. Tendons T1, T3 and T4 are 19 x 0.6"Φ strand tendons. Tendon T2 is a 12 x 0.6"Φ strand tendon.

SUBJECT TO CHANGE

GTH	1-Nov-05						
Designed by	Date						
AHQ	5-May-06						
Drawn by	Date						
JER	5-May-06						
Checked by	Date						
TWS	5-May-06						
Approved by	Date	No.	Date	By / Chk	App.	Revisions	

NORTH CORRIDOR METRORAIL EXTENSION - PRELIMINARY ENGINEERING (100% SUBMITTAL)

STRUCTURES - GUIDEWAY (CONCRETE)

MIAMI-DADE COUNTY

MIAMI-DADE TRANSIT

PARSONS
7600 CORPORATE CENTER DRIVE, SUITE 500
MIAMI, FLORIDA 33126
PHONE: (786) 464-1000 FAX: (786) 845-7119
CERTIFICATE OF AUTHORIZATION NO. 1836

Approved / Date

Approved / Date

CONTINUOUS UNIT TYPE 1a
P.T. LAYOUT 1
DUAL TRACK GUIDEWAY

Scale NTS | Drawing SGC- 152 | Sheet 363

5/8/2006 5:48:07 PM g:\646331_north_corridor\cadd\superstr\ptlayout_dt_cont unit-1_1a.dgn

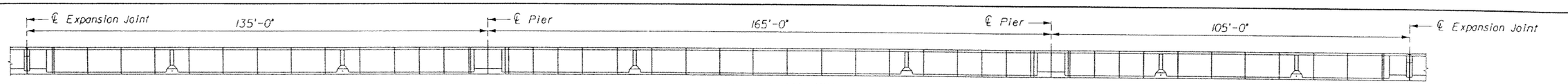

UNIT ELEVATION

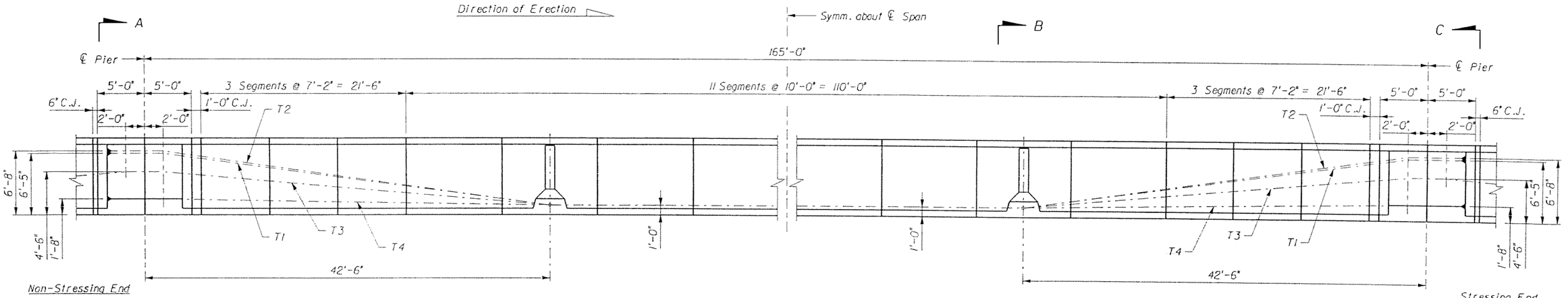

ELEVATION

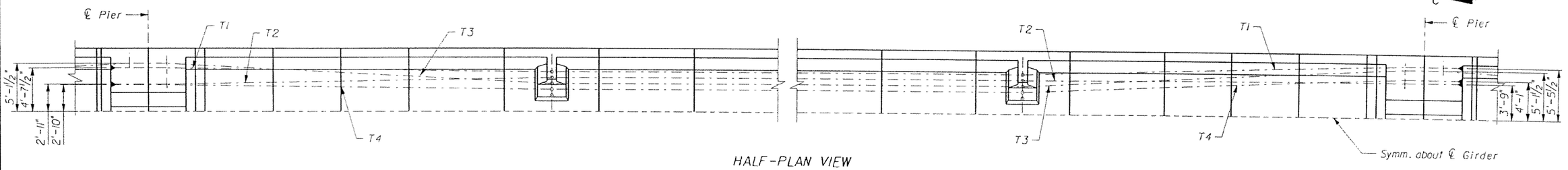

HALF-PLAN VIEW

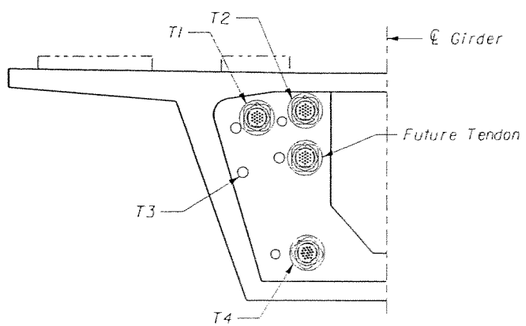

SECTION A-A

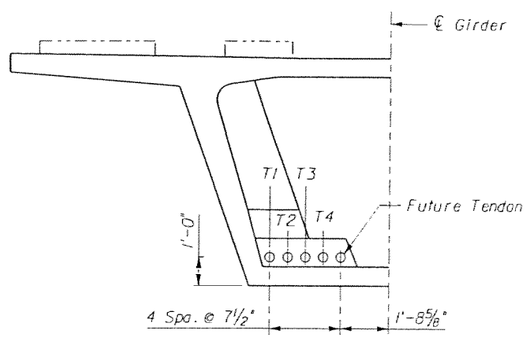

SECTION B-B

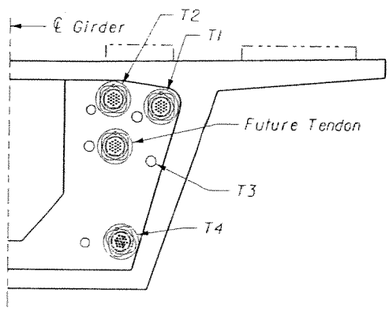

SECTION C-C

NOTES:

1. All dimensions are along ℄ Girder (unless otherwise noted).
2. Tendons T1, T2, T3 and T4 are 19 x 0.6"Ø strand tendons.

SUBJECT TO CHANGE

GTH Designed by	1-Nov-05 Date					
AHQ Drawn by	5-May-06 Date					
JER Checked by	5-May-06 Date					
TWS Approved by	5-May-06 Date	No.	Date	By / Chk	App.	Revisions

NORTH CORRIDOR METRORAIL EXTENSION - PRELIMINARY ENGINEERING (100% SUBMITTAL)

MIAMI-DADE COUNTY — MIAMI-DADE TRANSIT

PARSONS
7600 CORPORATE CENTER DRIVE, SUITE 500
MIAMI, FLORIDA 33126
PHONE: (786) 464-1000 FAX: (786) 845-7119
CERTIFICATE OF AUTHORIZATION NO. 1836

Approved / Date

Approved / Date

STRUCTURES - GUIDEWAY (CONCRETE)

CONTINUOUS UNIT TYPE 1a
P.T. LAYOUT 2
DUAL TRACK GUIDEWAY

Scale NTS | Drawing SGC- 153 | Sheet 364

5/8/2006 5:48:09 PM g:\646331_north_corridor\cadd\superstr\pt\layout_dt_cont unit-2_1a.dgn

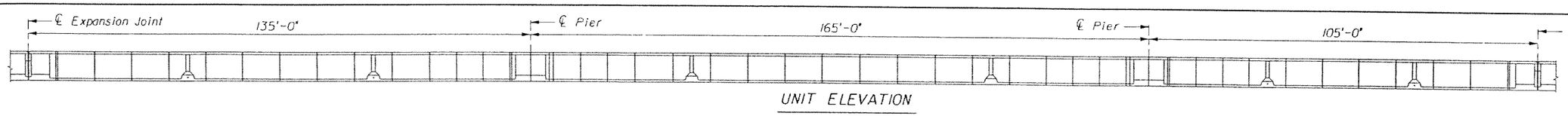

UNIT ELEVATION

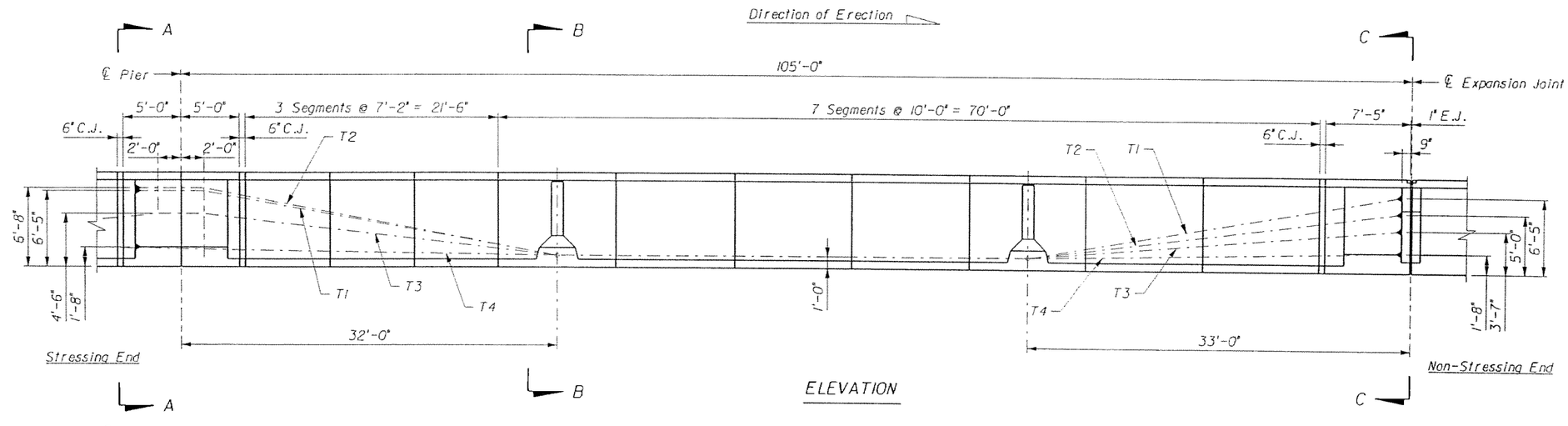

ELEVATION

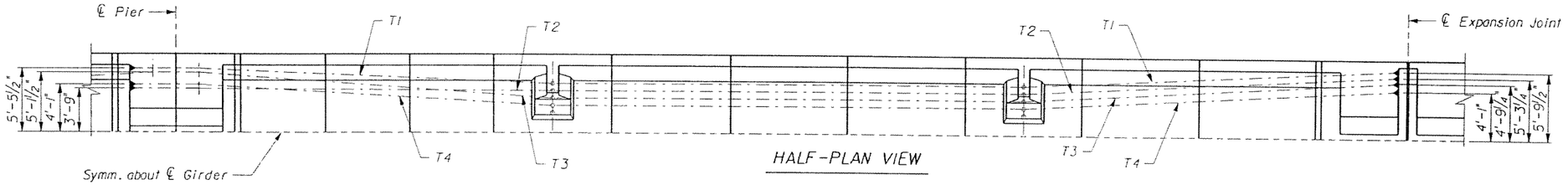

HALF-PLAN VIEW

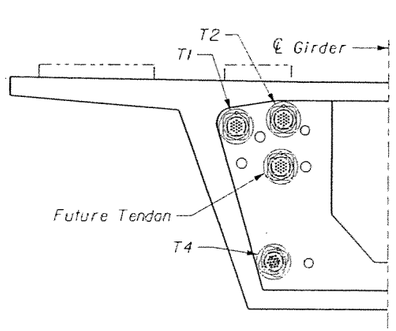

SECTION A-A

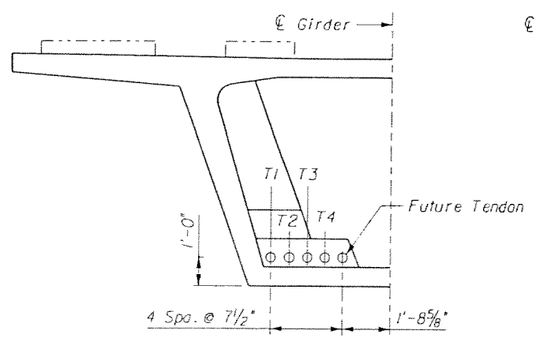

SECTION B-B

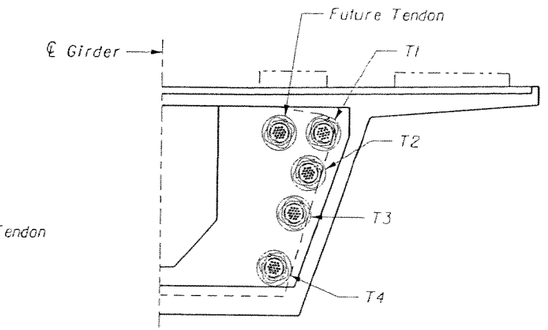

SECTION C-C

NOTES:

1. All dimensions are along ℄ Girder (unless otherwise noted).
2. Tendons T1, T3 and T4 are 19 x 0.6"Ø strand tendons. Tendon T2 is a 12 x 0.6"Ø strand tendon.

GTH Designed by	1-Nov-05 Date					
AHQ Drawn by	5-May-06 Date					
JER Checked by	5-May-06 Date					
TWS Approved by	5-May-06 Date	No.	Date	By / Chk	App.	Revisions

NORTH CORRIDOR METRORAIL EXTENSION - PRELIMINARY ENGINEERING (100% SUBMITTAL)

MIAMI-DADE COUNTY

MIAMI-DADE TRANSIT

PARSONS
7600 CORPORATE CENTER DRIVE, SUITE 500
MIAMI, FLORIDA 33126
PHONE: (786) 464-1000 FAX: (786) 845-7119
CERTIFICATE OF AUTHORIZATION NO. 1838

Approved | Date | Approved | Date

SUBJECT TO CHANGE

STRUCTURES - GUIDEWAY (CONCRETE)

CONTINUOUS UNIT TYPE 1a
P.T. LAYOUT 3
DUAL TRACK GUIDEWAY

Scale NTS | Drawing SGC- 154 | Sheet 365

5/8/2006 5:48:11 PM g:\646331_north_corridor\cadd\superstr\plt\layout_dt_cont unit-3_1a.dgn

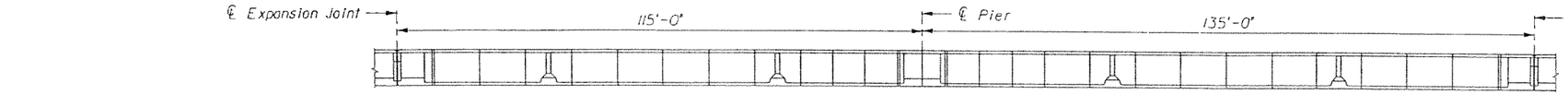

UNIT ELEVATION

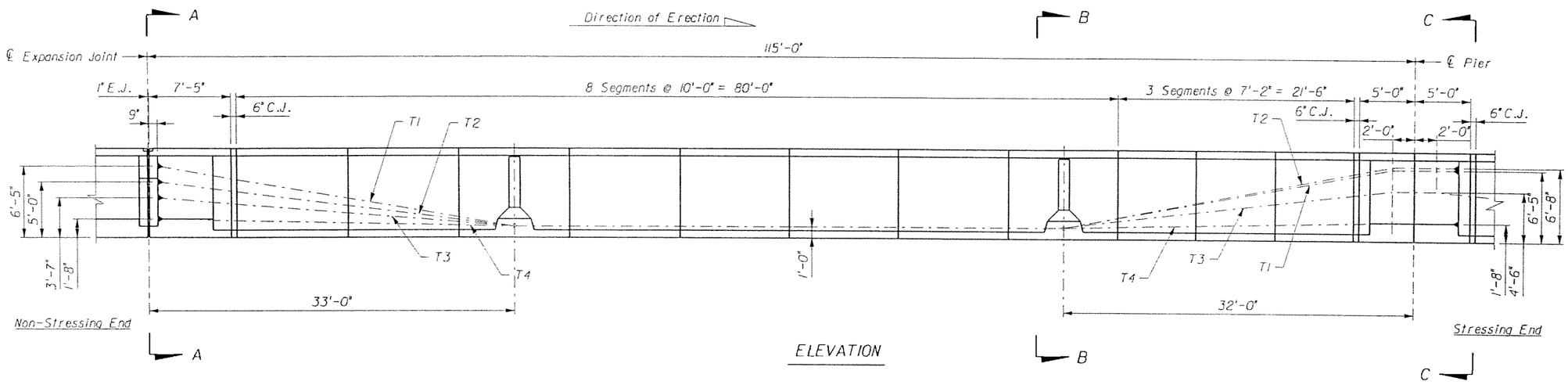

ELEVATION

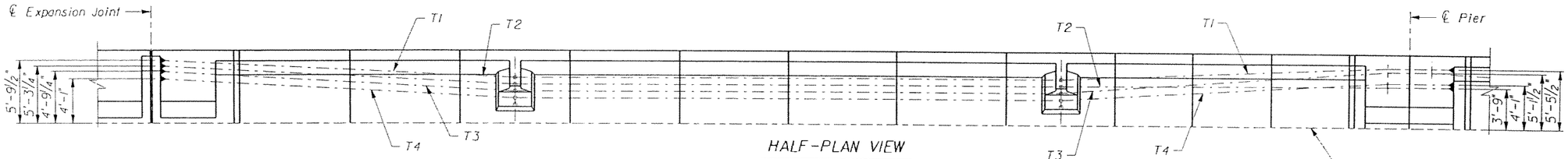

HALF-PLAN VIEW

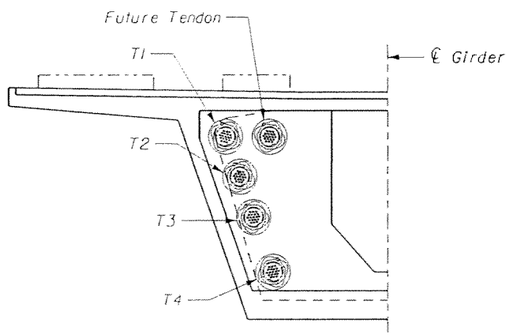

SECTION A-A

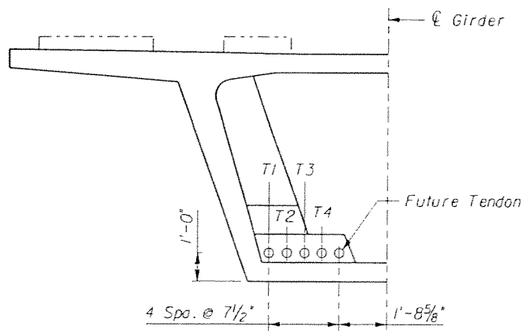

SECTION B-B

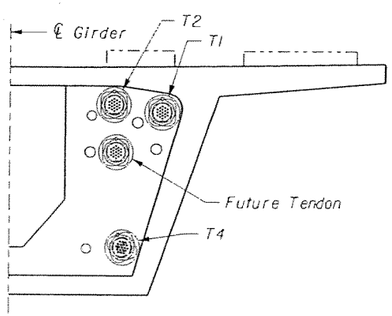

SECTION C-C

NOTES:

1. All dimensions are along ℄ Girder (unless otherwise noted).
2. Tendons T1, T3 and T4 are 19 x 0.6"Ø strand tendons. Tendon T2 is a 12 x 0.6"Ø strand tendon.

GTH Designed by	1-Nov-05 Date					
AHQ Drawn by	5-May-06 Date					
JER Checked by	5-May-06 Date					
TWS Approved by	5-May-06 Date	No.	Date	By / Chk	App.	Revisions

NORTH CORRIDOR METRORAIL EXTENSION - PRELIMINARY ENGINEERING (100% SUBMITTAL)

MIAMI-DADE COUNTY — MIAMI-DADE TRANSIT

PARSONS
7600 CORPORATE CENTER DRIVE, SUITE 500
MIAMI, FLORIDA 33126
PHONE: (786) 464-1000 FAX: (786) 845-7119
CERTIFICATE OF AUTHORIZATION NO. 1838

Approved / Date

Approved / Date

SUBJECT TO CHANGE

STRUCTURES - GUIDEWAY (CONCRETE)

CONTINUOUS UNIT TYPE 1b
P.T. LAYOUT 1
DUAL TRACK GUIDEWAY

Scale NTS | Drawing SGC- 155 | Sheet 366

5/8/2006 5:48:13 PM g:\646331_north_corridor\cadd\superstr\ptlayout_dt_cont unit-1_1b.dgn

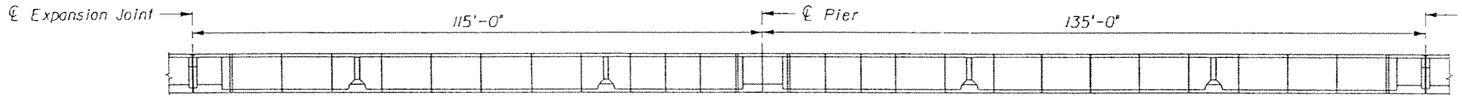

UNIT ELEVATION

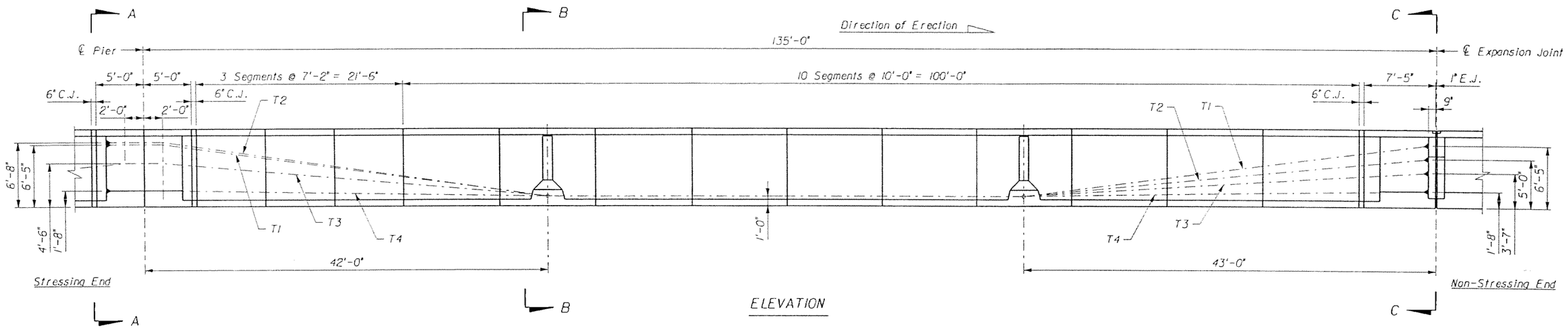

ELEVATION

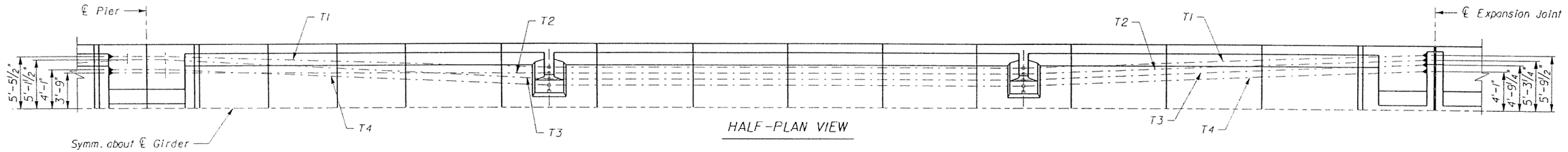

HALF-PLAN VIEW

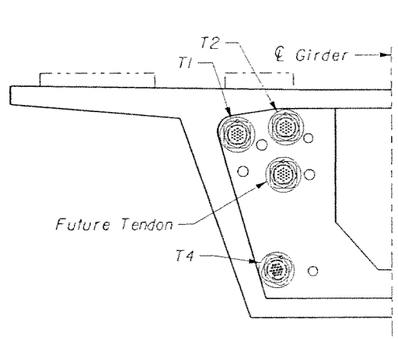

SECTION A-A

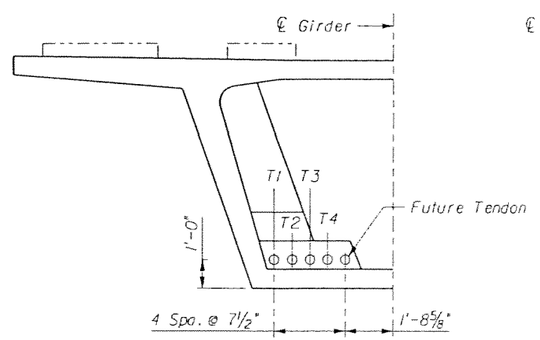

SECTION B-B

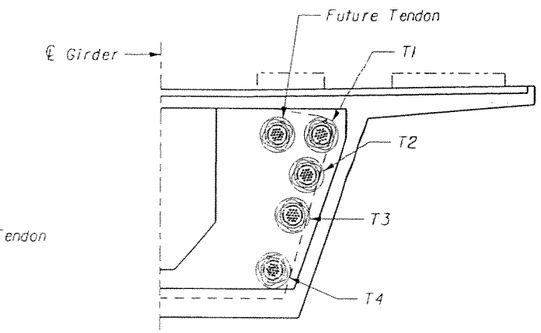

SECTION C-C

NOTES:

1. All dimensions are along ℄ Girder (unless otherwise noted).
2. Tendons T1, T3 and T4 are 19 x 0.6"Φ strand tendons.
   Tendon T2 is a 12 x 0.6"Φ strand tendon.

SUBJECT TO CHANGE

GTH Designed by	1-Nov-05 Date					
AHQ Drawn by	5-May-06 Date					
JER Checked by	5-May-06 Date					
TWS Approved by	5-May-06 Date	No.	Date	By / Chk	App.	Revisions

NORTH CORRIDOR METRORAIL EXTENSION - PRELIMINARY ENGINEERING (100% SUBMITTAL)

STRUCTURES - GUIDEWAY (CONCRETE)

MIAMI-DADE COUNTY

MIAMI-DADE TRANSIT

PARSONS
7600 CORPORATE CENTER DRIVE, SUITE 500
MIAMI, FLORIDA 33126
PHONE: (786) 464-1000 FAX: (786) 845-7119
CERTIFICATE OF AUTHORIZATION NO. 1838

Approved | Date

Approved | Date

CONTINUOUS UNIT TYPE 1b
P.T. LAYOUT 2
DUAL TRACK GUIDEWAY

Scale NTS | Drawing SGC- 156 | Sheet 367

5/8/2006 5:48:14 PM g:\646331_north_corridor\acadd\superstr\pt\layout_pt_cont unit-2_1b.dgn

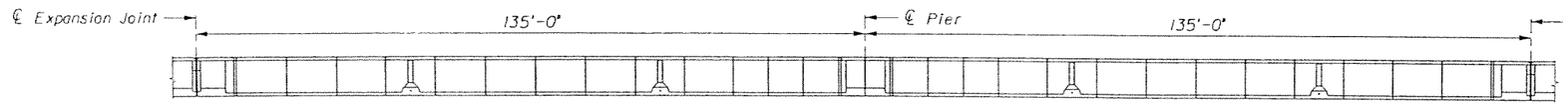

UNIT ELEVATION

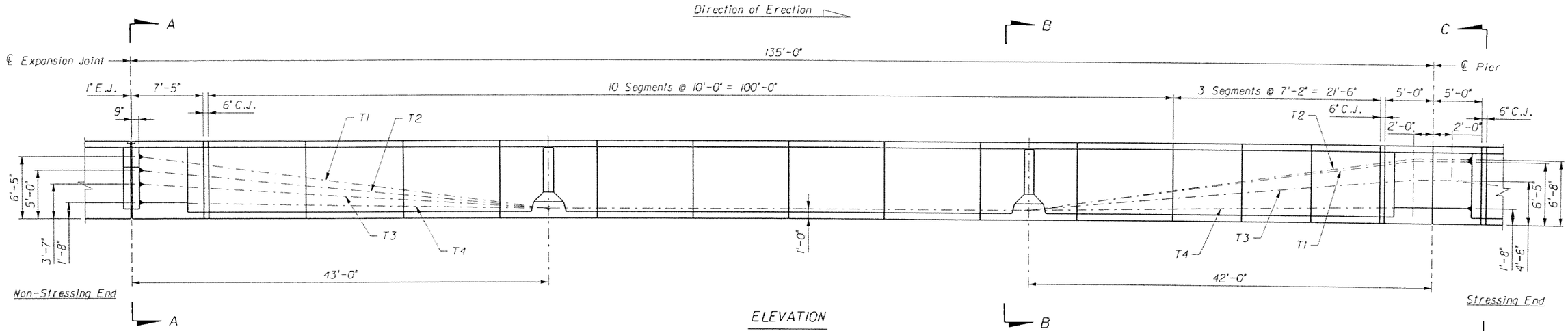

ELEVATION

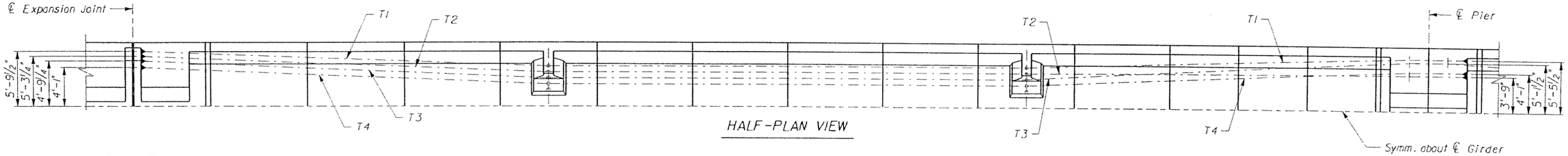

HALF-PLAN VIEW

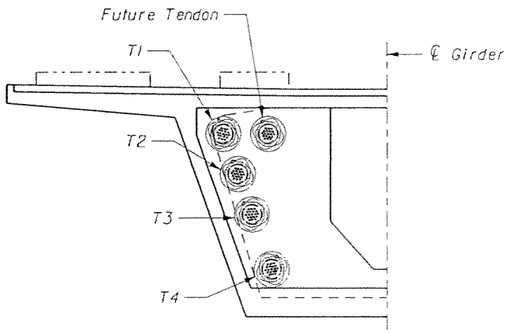

SECTION A-A

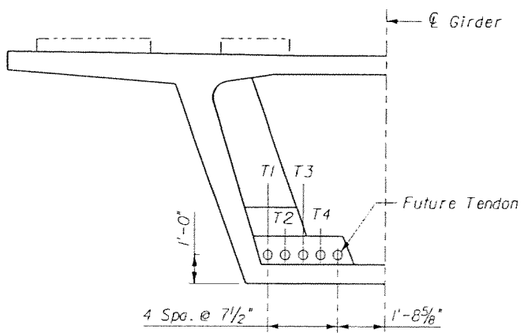

SECTION B-B

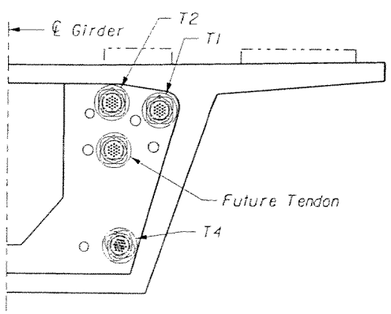

SECTION C-C

NOTES:

1. All dimensions are along ℄ Girder (unless otherwise noted).
2. Tendons T1, T3 and T4 are 19 x 0.6"Φ strand tendons. Tendon T2 is a 12 x 0.6"Φ strand tendon.

SUBJECT TO CHANGE

GTH Designed by	1-Nov-05 Date					
AHQ Drawn by	5-May-06 Date					
JER Checked by	5-May-06 Date					
TWS Approved by	5-May-06 Date	No.	Date	By / Chk	App.	Revisions

NORTH CORRIDOR METRORAIL EXTENSION - PRELIMINARY ENGINEERING (100% SUBMITTAL)

MIAMI-DADE COUNTY

MIAMI-DADE TRANSIT

PARSONS
7600 CORPORATE CENTER DRIVE, SUITE 500
MIAMI, FLORIDA 33126
PHONE: (786) 464-1000 FAX: (786) 845-7119
CERTIFICATE OF AUTHORIZATION NO. 1838

Approved Date

Approved Date

STRUCTURES - GUIDEWAY (CONCRETE)

CONTINUOUS UNIT TYPE 1c
P.T. LAYOUT 1
DUAL TRACK GUIDEWAY

Scale NTS Drawing SGC- 157 Sheet 368

5/8/2006 5:48:16 PM g:\646331_north_corridor\cadd\superst\ptlayout_dt_cont unit-1_1c.dgn

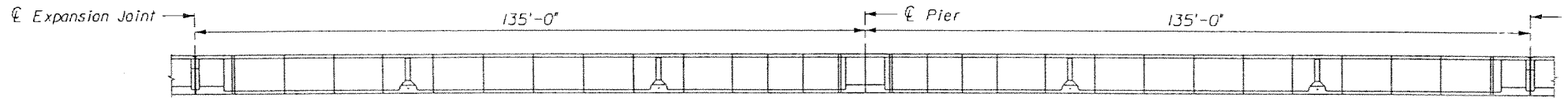

UNIT ELEVATION

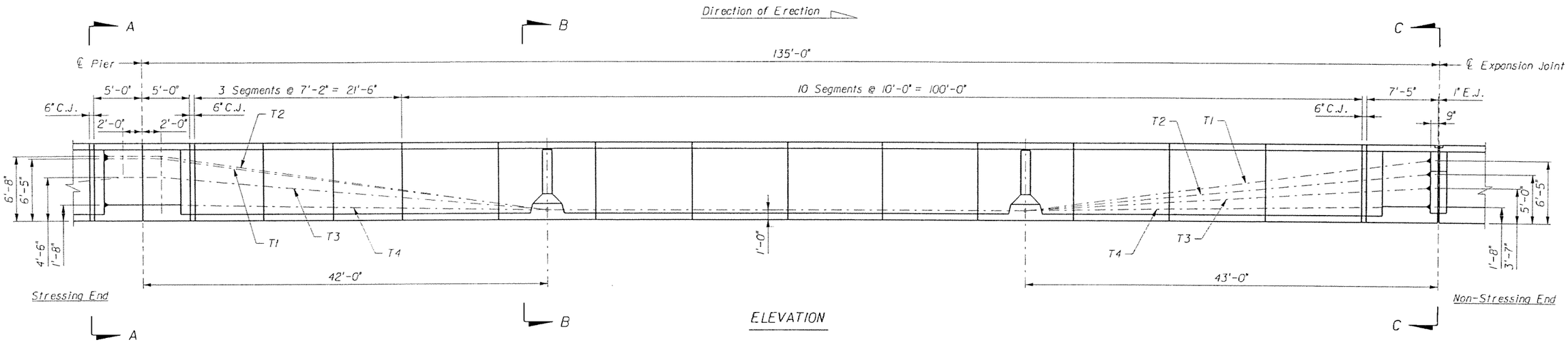

ELEVATION

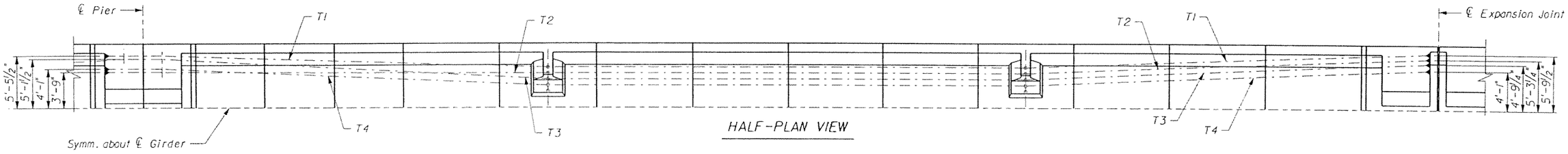

HALF-PLAN VIEW

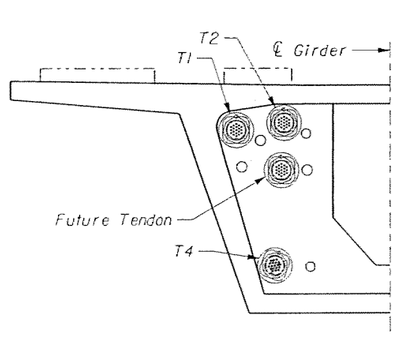

SECTION A-A

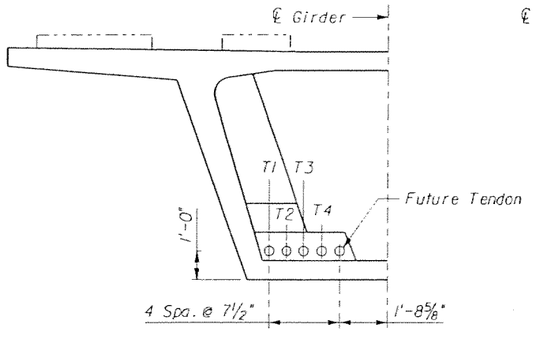

SECTION B-B

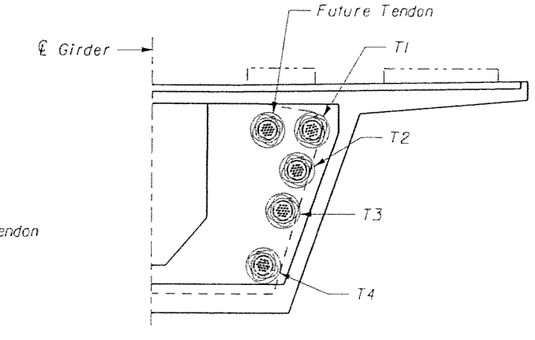

SECTION C-C

NOTES:

1. All dimensions are along ℄ Girder (unless otherwise noted).
2. Tendons T1, T3 and T4 are 19 x 0.6"Ø strand tendons. Tendon T2 is a 12 x 0.6"Ø strand tendon.

SUBJECT TO CHANGE

GTH Designed by	1-Nov-05 Date					
AHQ Drawn by	5-May-06 Date					
JER Checked by	5-May-06 Date					
TWS Approved by	5-May-06 Date	No.	Date	By / Chk	App.	Revisions

NORTH CORRIDOR METRORAIL EXTENSION - PRELIMINARY ENGINEERING (100% SUBMITTAL)

STRUCTURES - GUIDEWAY (CONCRETE)

MIAMI-DADE COUNTY

MIAMI-DADE TRANSIT

PARSONS
7600 CORPORATE CENTER DRIVE, SUITE 500
MIAMI, FLORIDA 33126
PHONE: (786) 464-1000 FAX: (786) 845-7119
CERTIFICATE OF AUTHORIZATION NO. 1638

Approved / Date

Approved / Date

CONTINUOUS UNIT TYPE 1c
P.T. LAYOUT 2
DUAL TRACK GUIDEWAY

Scale: None | Drawing: SGC- 158 | Sheet: 369

5/5/2006 5:48:17 PM g:\646331_north_corridor\cadd\superstr\ptlayout_ct_cont unit-2_1c.dgn

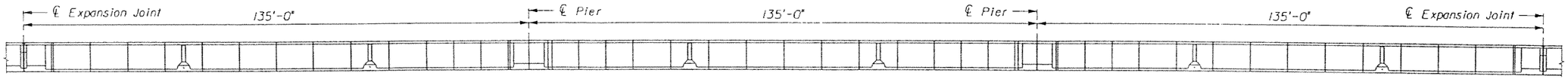

UNIT ELEVATION

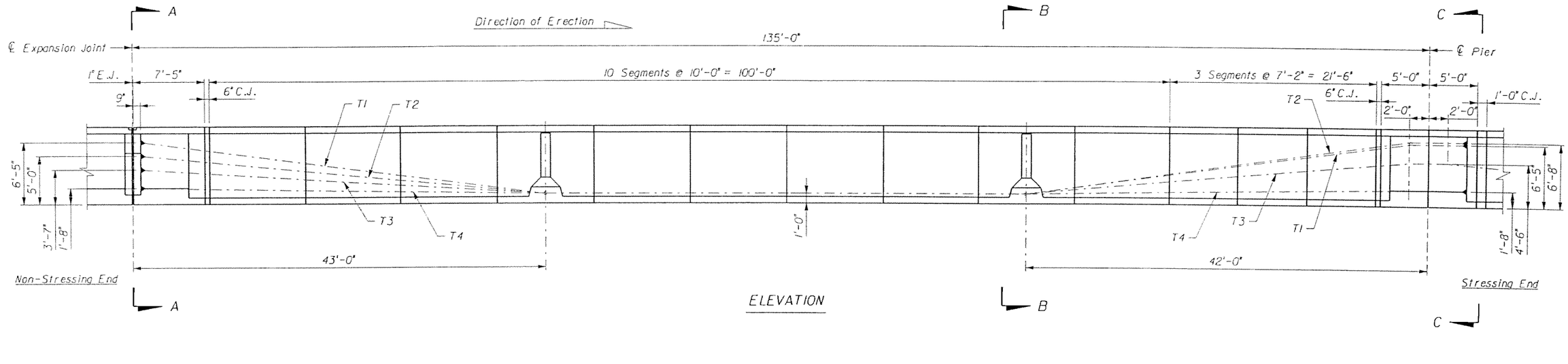

ELEVATION

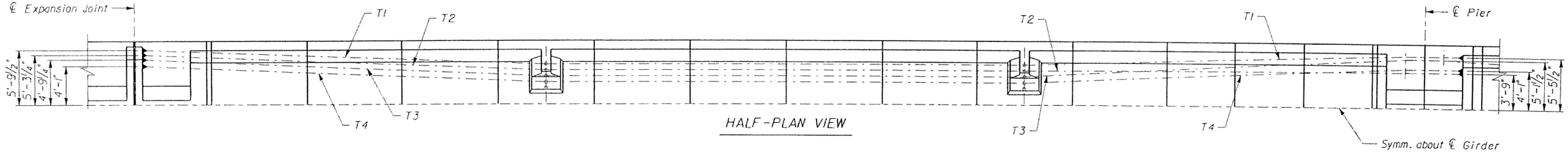

HALF-PLAN VIEW

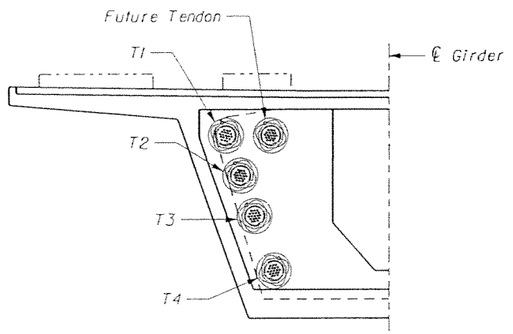

SECTION A-A

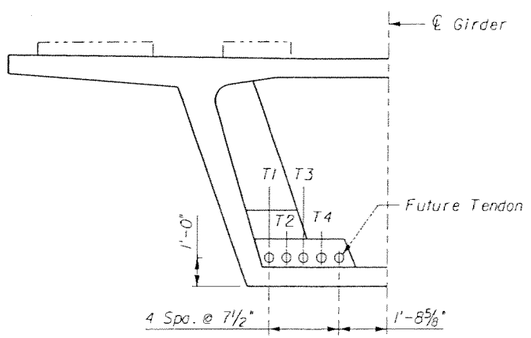

SECTION B-B

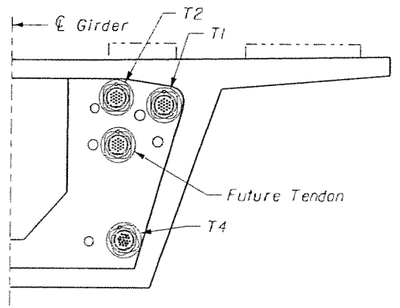

SECTION C-C

NOTES:

1. All dimensions are along ℄ Girder (unless otherwise noted).
2. Tendons T1, T3 and T4 are 19 x 0.6"Ø strand tendons. Tendon T2 is a 12 x 0.6"Ø strand tendon.

SUBJECT TO CHANGE

GTH Designed by	1-Nov-05 Date				
AHQ Drawn by	5-May-06 Date				
JER Checked by	5-May-06 Date				
TWS Approved by	5-May-06 Date	No.	Date	By / Chk	App. Revisions

NORTH CORRIDOR METRORAIL EXTENSION - PRELIMINARY ENGINEERING (100% SUBMITTAL)

STRUCTURES - GUIDEWAY (CONCRETE)

MIAMI-DADE COUNTY

MIAMI-DADE TRANSIT

PARSONS
7600 CORPORATE CENTER DRIVE, SUITE 500
MIAMI, FLORIDA 33126
PHONE: (786) 464-1000 FAX: (786) 845-7119
CERTIFICATE OF AUTHORIZATION NO. 1838

Approved | Date

Approved | Date

CONTINUOUS UNIT TYPE 1d
P.T. LAYOUT 1
DUAL TRACK GUIDEWAY

Scale NTS | Drawing SGC- 159 | Sheet 370

5/8/2006 5:48:19 PM g:\648331_north_corridor\cadd\superstr\playout_dt_cont unit-1_1d.dgn

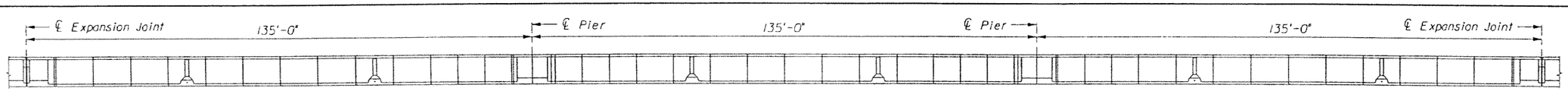

UNIT ELEVATION

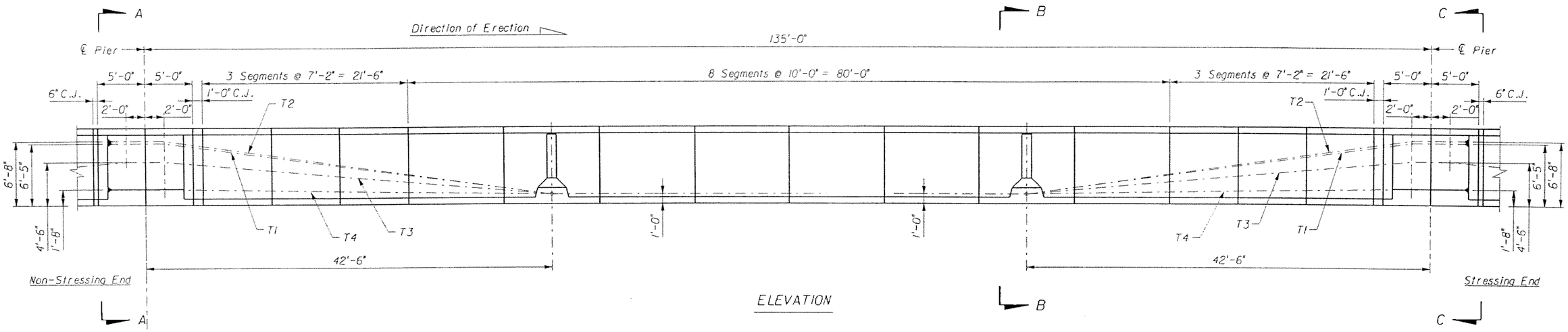

ELEVATION

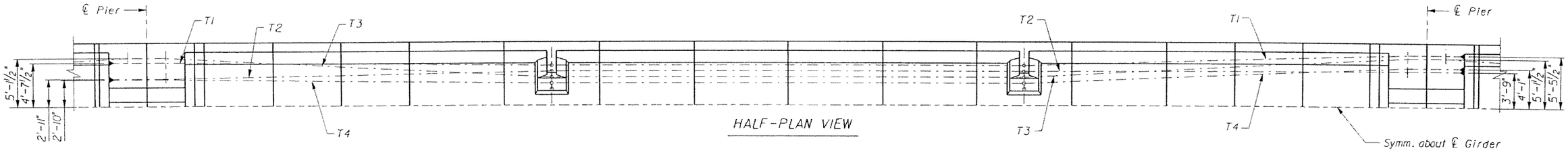

HALF-PLAN VIEW

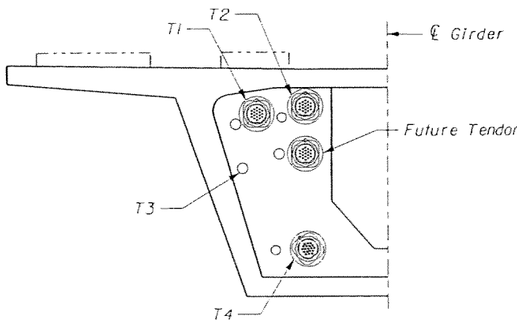

SECTION A-A

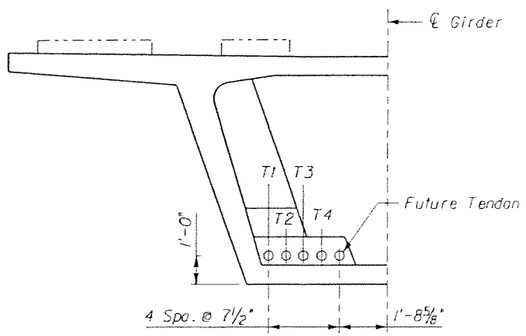

SECTION B-B

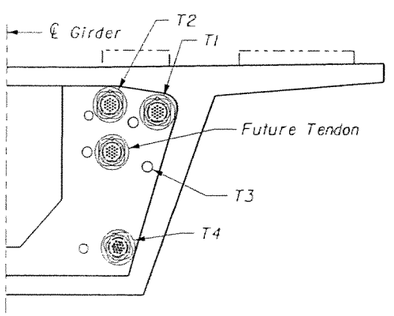

SECTION C-C

NOTES:

1. All dimensions are along ℄ Girder (unless otherwise noted).
2. Tendons T1, T2, T3 and T4 are 19 x 0.6"Ø strand tendons.

SUBJECT TO CHANGE

GTH Designed by	1-Nov-05 Date				
AHQ Drawn by	5-May-06 Date				
JER Checked by	5-May-06 Date				
TWS Approved by	5-May-06 Date	No.	Date	By / Chk	App.	Revisions

NORTH CORRIDOR METRORAIL EXTENSION - PRELIMINARY ENGINEERING (100% SUBMITTAL)

MIAMI-DADE COUNTY

MIAMI-DADE TRANSIT

PARSONS
7600 CORPORATE CENTER DRIVE, SUITE 500
MIAMI, FLORIDA 33126
PHONE: (786) 464-1000 FAX: (786) 845-7119
CERTIFICATE OF AUTHORIZATION NO. 1838

Approved | Date | Approved | Date

STRUCTURES - GUIDEWAY (CONCRETE)

CONTINUOUS UNIT TYPE 1d
P.T. LAYOUT 2
DUAL TRACK GUIDEWAY

Scale NTS | Drawing SGC- 160 | Sheet 371

5/8/2006 5:48:21 PM g:\646331_north_corridor\cadd\supers\ptlayout_dt_cont unit-2_1d.dgn

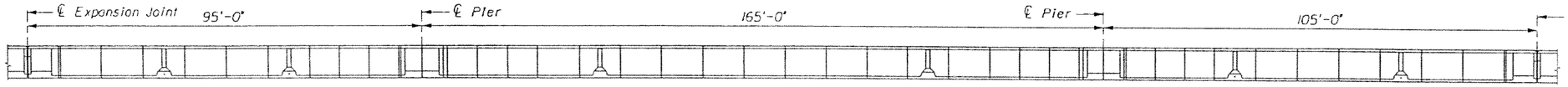

UNIT ELEVATION

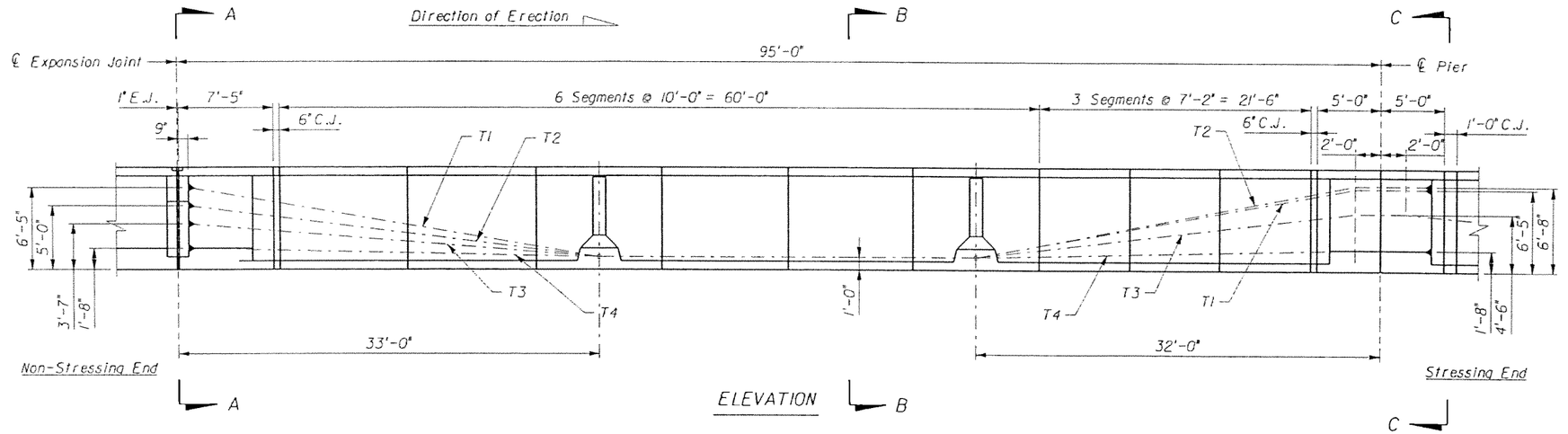

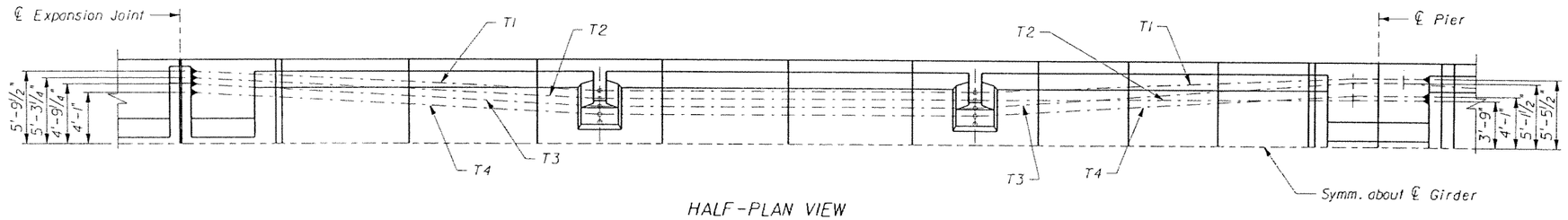

HALF-PLAN VIEW

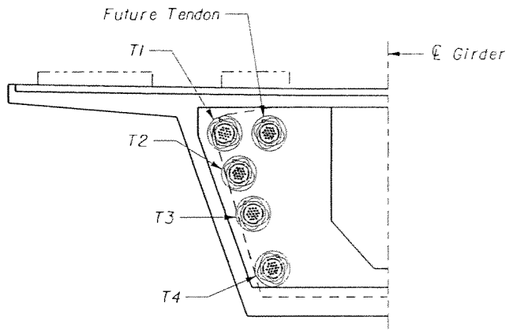

SECTION A-A

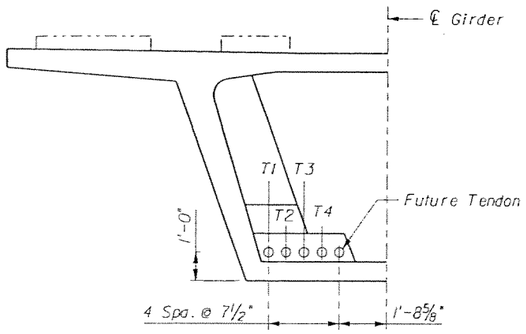

SECTION B-B

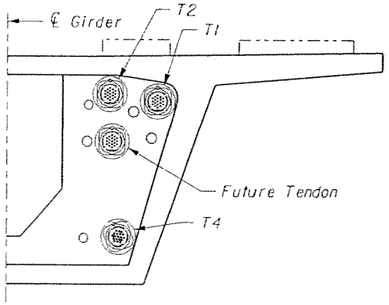

SECTION C-C

NOTES:

1. All dimensions are along ℄ Girder (unless otherwise noted).
2. Tendons T1, T3 and T4 are 19 x 0.6"ϕ strand tendons. Tendon T2 is a 12 x 0.6"ϕ strand tendon.

GTH Designed by	1-Nov-05 Date						
AHO Drawn by	5-May-06 Date						
JER Checked by	5-May-06 Date						
TWS Approved by	5-May-06 Date	No.	Date	By Chk	App.	Revisions	

NORTH CORRIDOR METRORAIL EXTENSION - PRELIMINARY ENGINEERING (100% SUBMITTAL)

MIAMI-DADE COUNTY — MIAMI-DADE TRANSIT

PARSONS
7600 CORPORATE CENTER DRIVE, SUITE 500
MIAMI, FLORIDA 33126
PHONE: (786) 464-1000 FAX: (786) 845-7119
CERTIFICATE OF AUTHORIZATION NO. 1838

Approved | Date | Approved | Date

SUBJECT TO CHANGE

STRUCTURES - GUIDEWAY (CONCRETE)

CONTINUOUS UNIT TYPE 1e
P.T. LAYOUT 1
DUAL TRACK GUIDEWAY

Scale NTS | Drawing SGC- 161 | Sheet 372

5/8/2006 5:48:23 PM g:\646331_north_corridor\cadd\superstr\pt\layout_dt_cont unit-1_1e.dgn

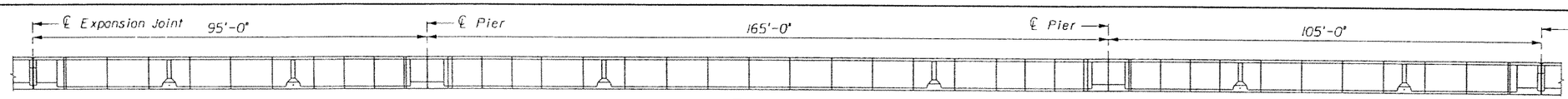

UNIT ELEVATION

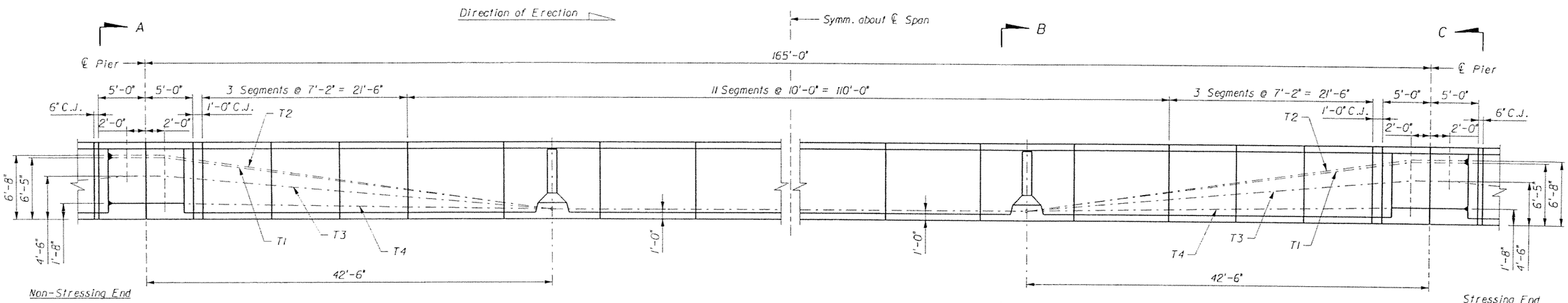

ELEVATION

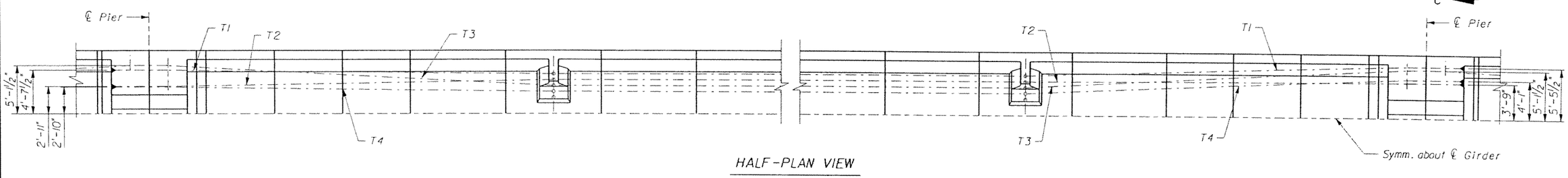

HALF-PLAN VIEW

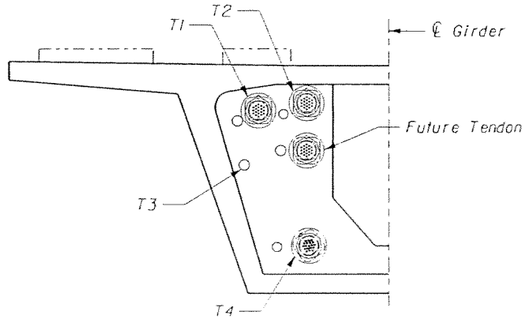

SECTION A-A

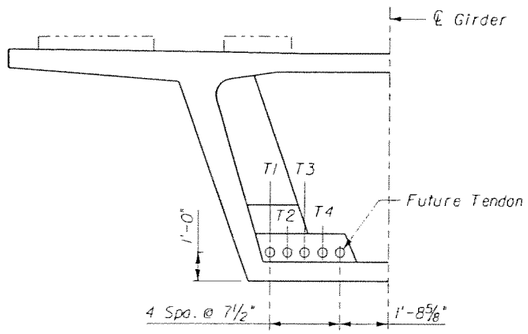

SECTION B-B

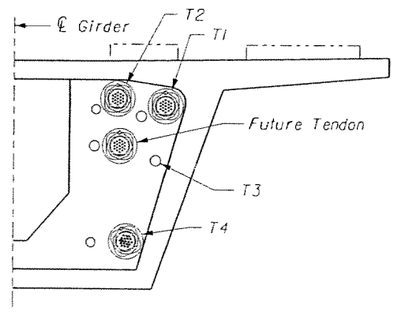

SECTION C-C

NOTES:

1. All dimensions are along ℄ Girder (unless otherwise noted).
2. Tendons T1, T2, T3 and T4 are 19 x 0.6"Φ strand tendons.

SUBJECT TO CHANGE

GTH	1-Nov-05						
Designed by	Date						
AHQ	5-May-06						
Drawn by	Date						
JER	5-May-06						
Checked by	Date						
TWS	5-May-06						
Approved by	Date	No.	Date	By / Chk.	App.	Revisions	

NORTH CORRIDOR METRORAIL EXTENSION - PRELIMINARY ENGINEERING (100% SUBMITTAL)

MIAMI-DADE COUNTY

MIAMI-DADE TRANSIT

PARSONS
7600 CORPORATE CENTER DRIVE, SUITE 500
MIAMI, FLORIDA 33126
PHONE: (786) 464-1000 FAX: (786) 845-7119
CERTIFICATE OF AUTHORIZATION NO. 1838

Approved | Date

Approved | Date

STRUCTURES - GUIDEWAY (CONCRETE)

CONTINUOUS UNIT TYPE 1e
P.T. LAYOUT 2
DUAL TRACK GUIDEWAY

Scale: NTS | Drawing: SGC- 162 | Sheet: 373

5/8/2006 5:48:25 PM g:\646331_north_corridor\cadd\supers\tptlayout_dt_cont unit-2_1e.dgn

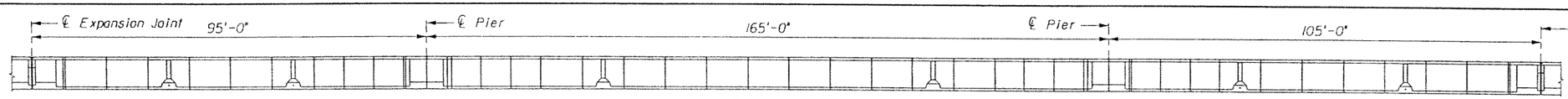

UNIT ELEVATION

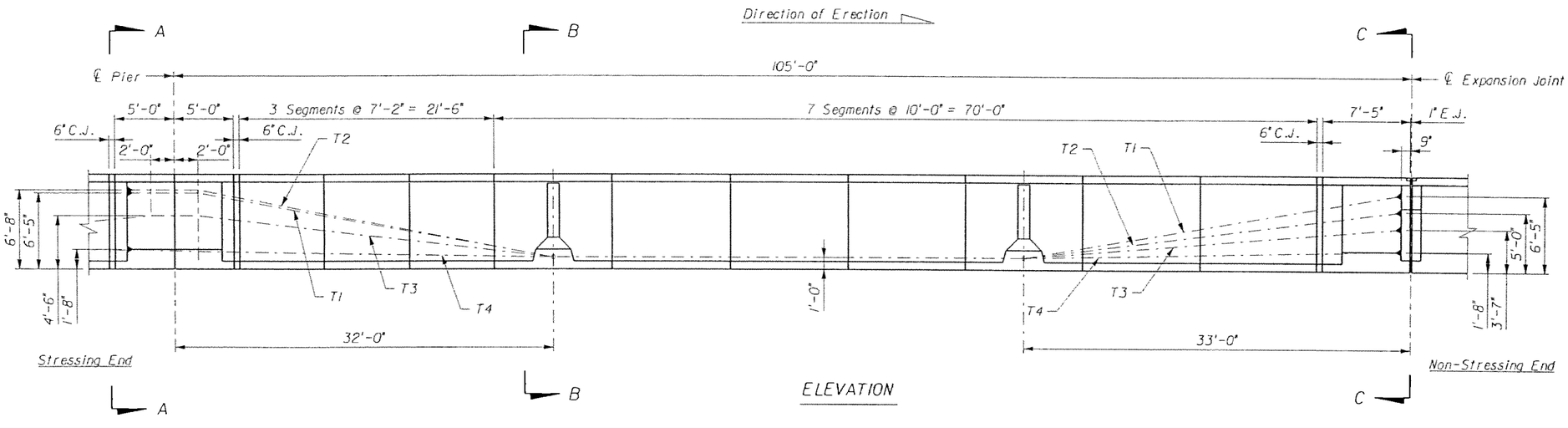

ELEVATION

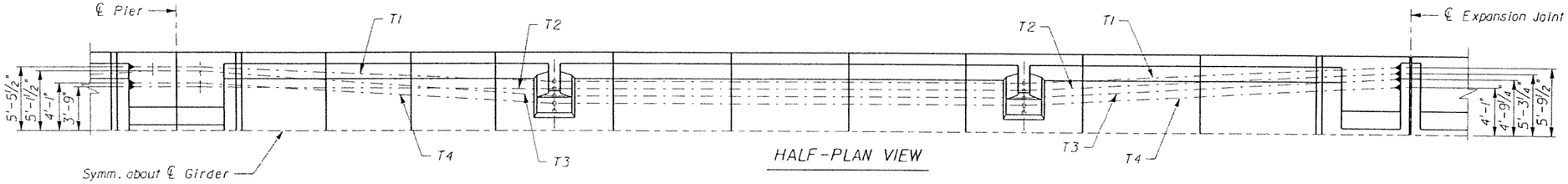

HALF-PLAN VIEW

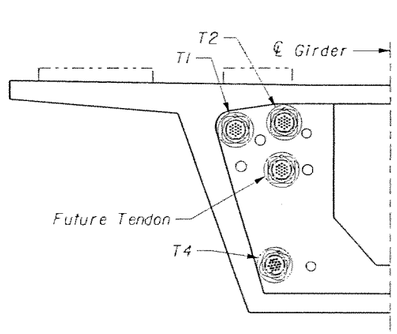

SECTION A-A

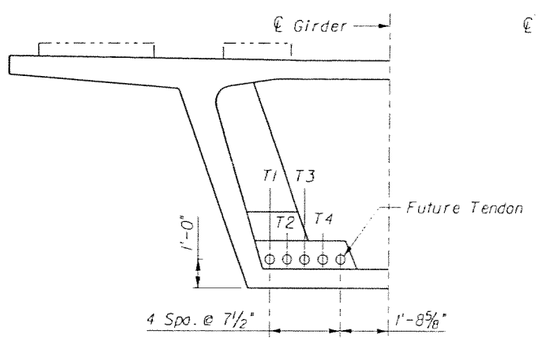

SECTION B-B

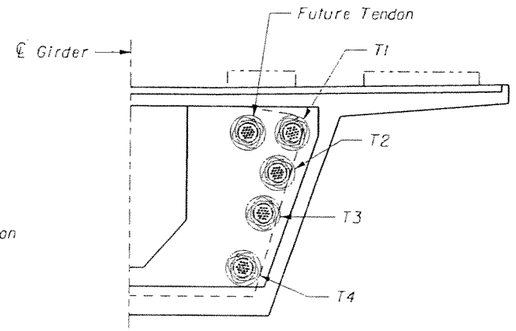

SECTION C-C

NOTES:

1. All dimensions are along ℄ Girder (unless otherwise noted).
2. Tendons T1, T3 and T4 are 19 x 0.6"Ø strand tendons. Tendon T2 is a 12 x 0.6"Ø strand tendon.

SUBJECT TO CHANGE

GTH	1-Nov-05						
Designed by	Date						
AHQ	5-May-06						
Drawn by	Date						
JER	5-May-06						
Checked by	Date						
TWS	5-May-06						
Approved by	Date	No.	Date	By / Chk	App.	Revisions	

NORTH CORRIDOR METRORAIL EXTENSION - PRELIMINARY ENGINEERING (100% SUBMITTAL)

MIAMI-DADE COUNTY

MIAMI-DADE TRANSIT

PARSONS
7600 CORPORATE CENTER DRIVE, SUITE 500
MIAMI, FLORIDA 33126
PHONE: (786) 464-1000 FAX: (786) 845-7119
CERTIFICATE OF AUTHORIZATION NO. 1838

Approved	Date	Approved	Date

STRUCTURES - GUIDEWAY (CONCRETE)

CONTINUOUS UNIT TYPE 1e
P.T. LAYOUT 3
DUAL TRACK GUIDEWAY

Scale NTS | Drawing SGC- 163 | Sheet 374

5/8/2006 5:48:27 PM g:\646331_north_corridor\cadd\superstr\ptlayout_dt_cont unit-3_1e.dgn

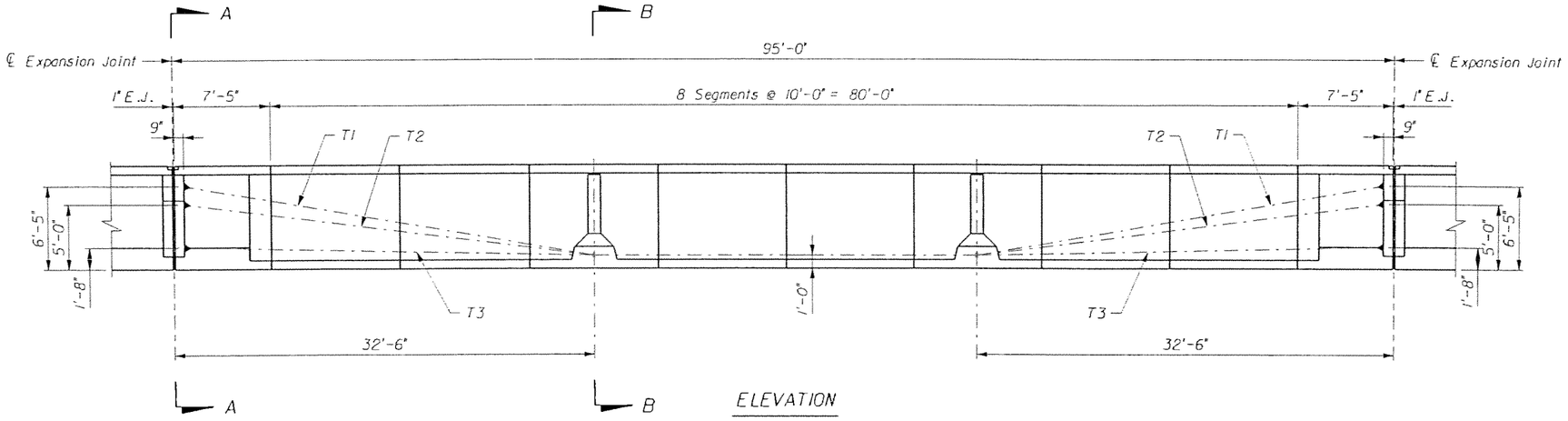

ELEVATION

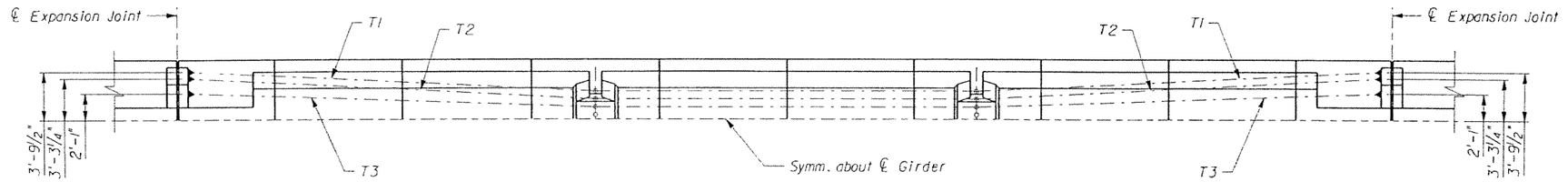

HALF-PLAN VIEW

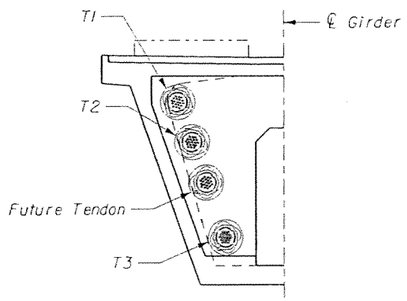

SECTION A-A

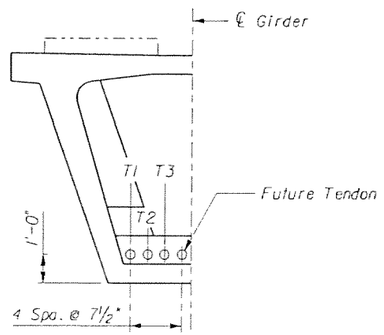

SECTION B-B

NOTES:

1. All dimensions are along ℄ Girder (unless otherwise noted).
2. Tendon T1, T2 and T3 are 12 x 0.6"Ø strand tendons.

GTH Designed by	1-Nov-05 Date					
AHQ Drawn by	5-May-06 Date					
JER Checked by	5-May-06 Date					
TWS Approved by	5-May-06 Date	No.	Date	By / Chk	App.	Revisions

NORTH CORRIDOR METRORAIL EXTENSION - PRELIMINARY ENGINEERING (100% SUBMITTAL)

MIAMI-DADE COUNTY

MIAMI-DADE TRANSIT

PARSONS
7600 CORPORATE CENTER DRIVE, SUITE 500
MIAMI, FLORIDA 33126
PHONE: (786) 464-1000 FAX: (786) 845-7119
CERTIFICATE OF AUTHORIZATION NO. 1838

Approved | Date

Approved | Date

SUBJECT TO CHANGE

STRUCTURES - GUIDEWAY (CONCRETE)

95'-0" SPAN P.T. LAYOUT
SINGLE TRACK GUIDEWAY

Scale NTS | Drawing SGC- 164 | Sheet 375

5/8/2006 5:48:28 PM g:\646331_north_corridor\cadd\superstr\ptlayout_st_95.dgn

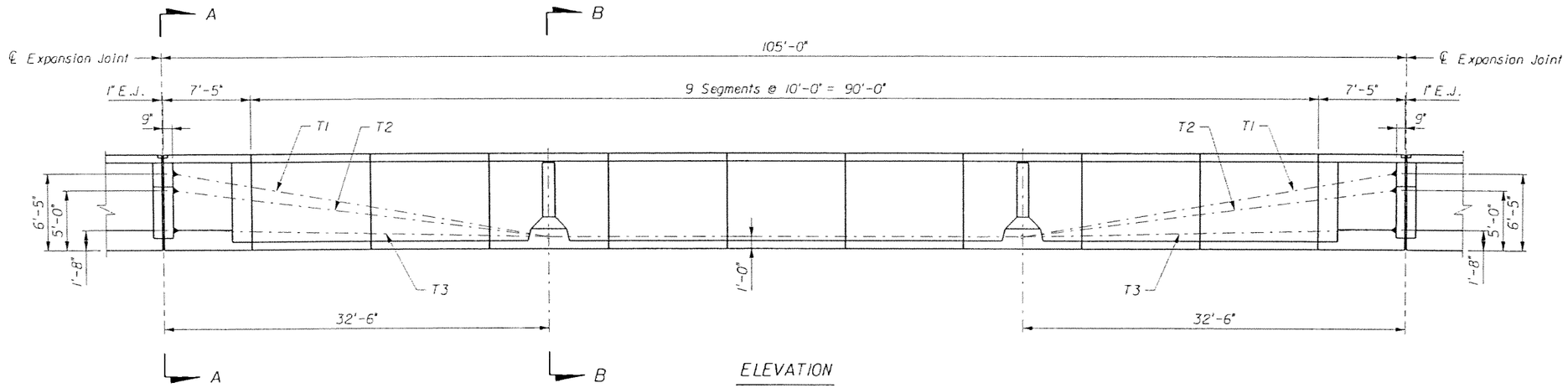

ELEVATION

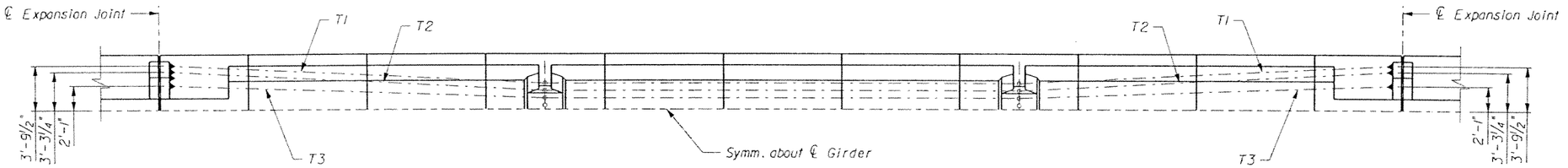

HALF-PLAN VIEW

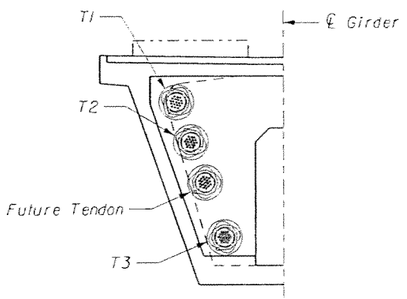

SECTION A-A

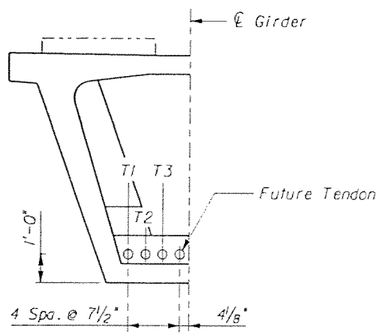

SECTION B-B

NOTES:

1. All dimensions are along ℄ Girder (unless otherwise noted).
2. Tendon T1 is a 19 x 0.6"Ø strand tendon.
   Tendons T2 and T3 are 12 x 0.6"Ø strand tendons.

SUBJECT TO CHANGE

GTH	1-Nov-05							
Designed by	Date							
AHQ	5-May-06							
Drawn by	Date							
JER	5-May-06							
Checked by	Date							
TWS	5-May-06							
Approved by	Date	No.	Date	By / Chk	App.	Revisions		

NORTH CORRIDOR METRORAIL EXTENSION - PRELIMINARY ENGINEERING (100% SUBMITTAL)

STRUCTURES - GUIDEWAY (CONCRETE)

MIAMI-DADE COUNTY

MIAMI-DADE TRANSIT

PARSONS
7500 CORPORATE CENTER DRIVE, SUITE 500
MIAMI, FLORIDA 33126
PHONE: (786) 464-1000 FAX: (786) 845-7119
CERTIFICATE OF AUTHORIZATION NO. 1838

Approved | Date | Approved | Date

105'-0" SPAN P.T. LAYOUT
SINGLE TRACK GUIDEWAY

Scale NTS | Drawing SGC- 165 | Sheet 376

5/8/2006 5:48:30 PM g:\646331_north_corridor\cadd\superstr\ptlayout_sl_105.dgn

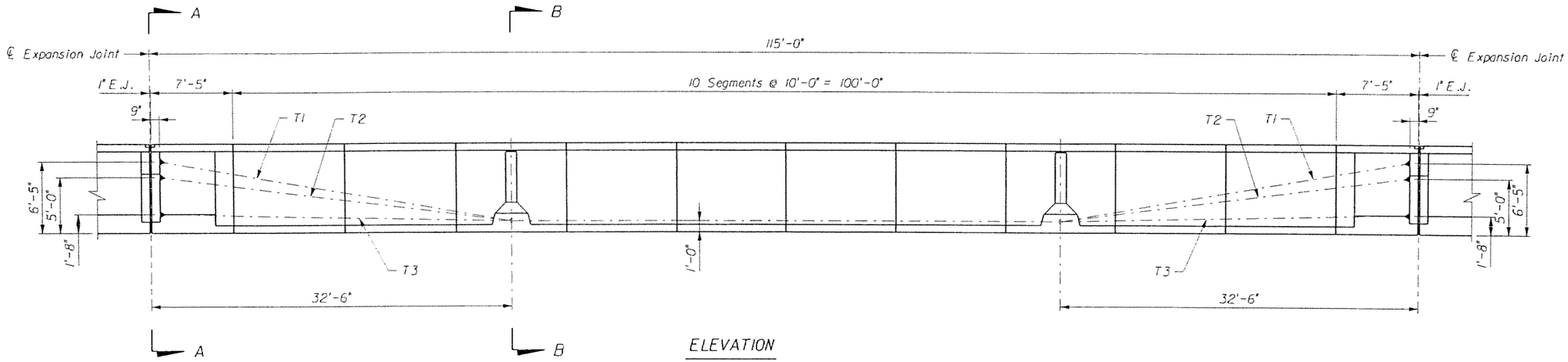

ELEVATION

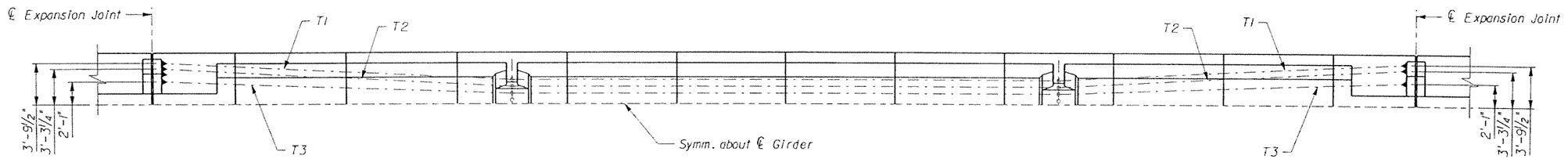

HALF-PLAN VIEW

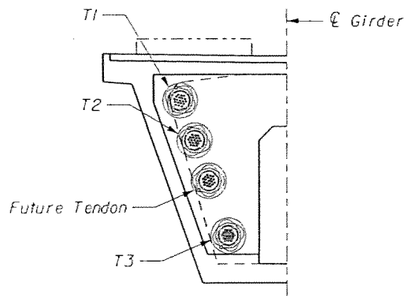

SECTION A-A

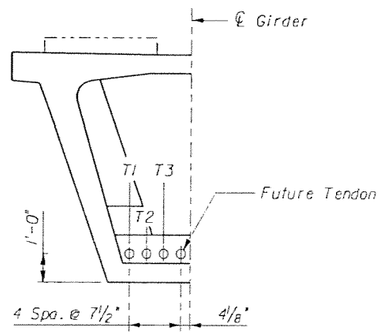

SECTION B-B

NOTES:

1. All dimensions are along ℄ Girder (unless otherwise noted).
2. Tendon T1 is a 19 x 0.6"Ø strand tendon.
   Tendons T2 and T3 are 12 x 0.6"Ø strand tendons.

SUBJECT TO CHANGE

GTH Designed by	1-Nov-05 Date					
AHQ Drawn by	5-May-06 Date					
JER Checked by	5-May-06 Date					
TWS Approved by	5-May-06 Date	No.	Date	By / Chk	App.	Revisions

NORTH CORRIDOR METRORAIL EXTENSION - PRELIMINARY ENGINEERING (100% SUBMITTAL)

MIAMI-DADE COUNTY

MIAMI-DADE TRANSIT

PARSONS
7600 CORPORATE CENTER DRIVE, SUITE 500
MIAMI, FLORIDA 33126
PHONE: (786) 464-1000 FAX: (786) 845-7119
CERTIFICATE OF AUTHORIZATION NO. 1838

Approved | Date

Approved | Date

STRUCTURES - GUIDEWAY (CONCRETE)

115'-0" SPAN P.T. LAYOUT
SINGLE TRACK GUIDEWAY

Scale NTS | Drawing SGC- 166 | Sheet 377

5/8/2006 5:48:31 PM g:\648331_north_corridor\cadd\superstr\playout_st_115.dgn

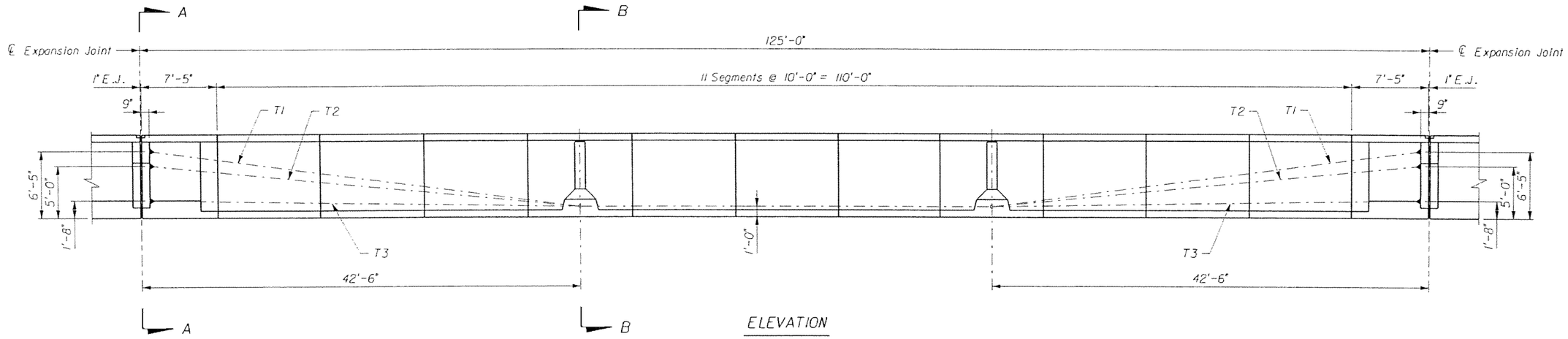

ELEVATION

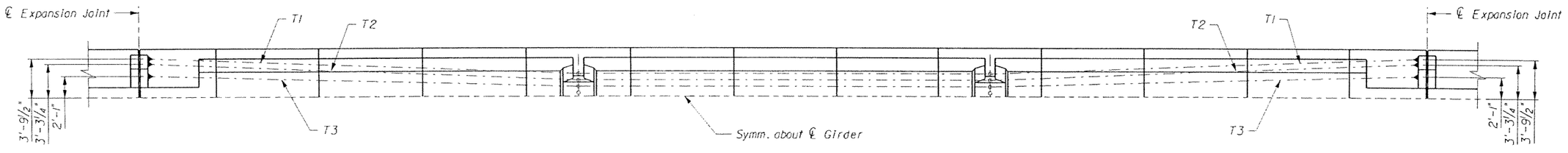

HALF-PLAN VIEW

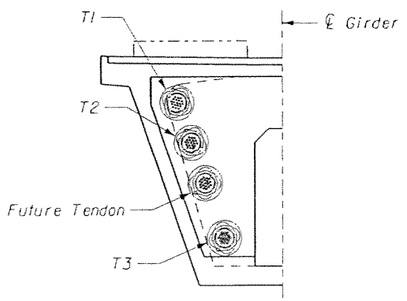

SECTION A-A

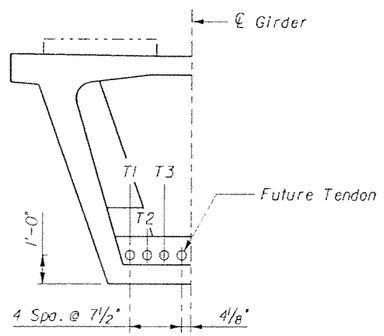

SECTION B-B

NOTES:

1. All dimensions are along ℄ Girder (unless otherwise noted).
2. Tendon T1 and T2 are 19 x 0.6"Ø strand tendons.
   Tendon T3 is a 12 x 0.6"Ø strand tendon.

SUBJECT TO CHANGE

GTH Designed by	1-Nov-05 Date					
AHQ Drawn by	5-May-06 Date					
JER Checked by	5-May-06 Date					
TWS Approved by	5-May-06 Date	No.	Date	By / Chk	App.	Revisions

NORTH CORRIDOR METRORAIL EXTENSION - PRELIMINARY ENGINEERING (100% SUBMITTAL)

MIAMI-DADE COUNTY — MIAMI-DADE TRANSIT

PARSONS
7600 CORPORATE CENTER DRIVE, SUITE 500
MIAMI, FLORIDA 33126
PHONE: (786) 464-1000 FAX: (786) 845-7119
CERTIFICATE OF AUTHORIZATION NO. 1638

Approved	Date	Approved	Date

STRUCTURES - GUIDEWAY (CONCRETE)

125'-0" SPAN P.T. LAYOUT
SINGLE TRACK GUIDEWAY

Scale NTS | Drawing SGC- 167 | Sheet 378

5/8/2006 5:48:33 PM g:\646331_north_corridor\cadd\superstr\pt\layout_st_125.dgn

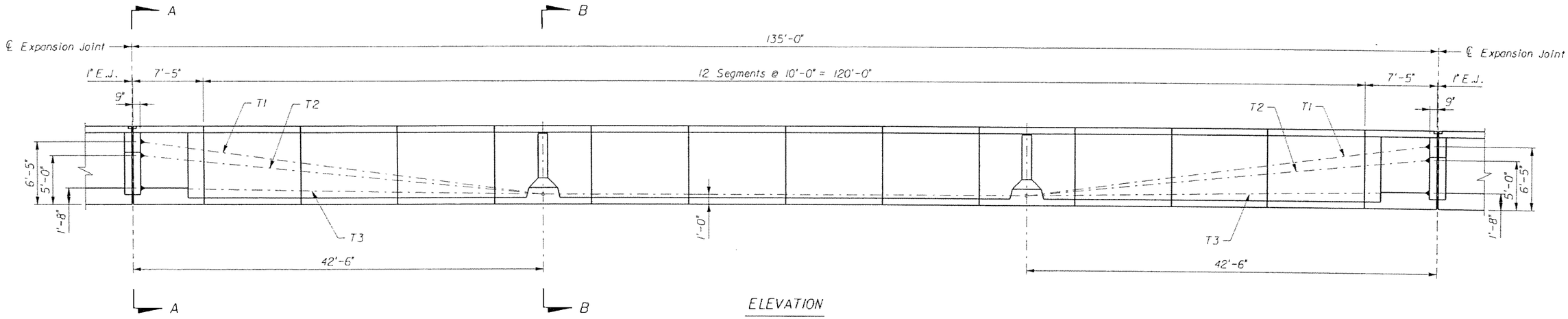

ELEVATION

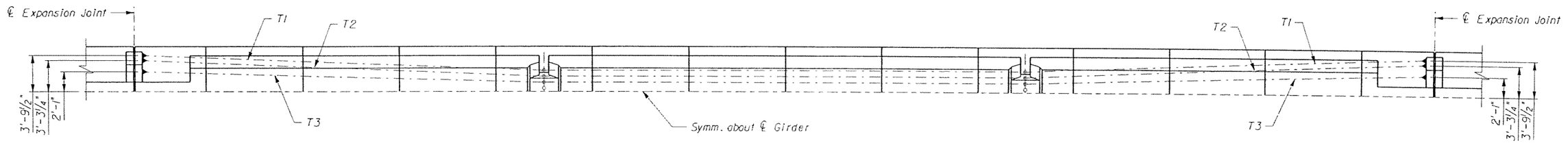

HALF-PLAN VIEW

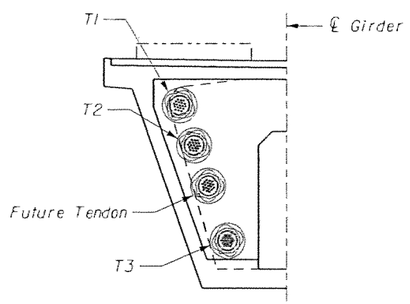

SECTION A-A

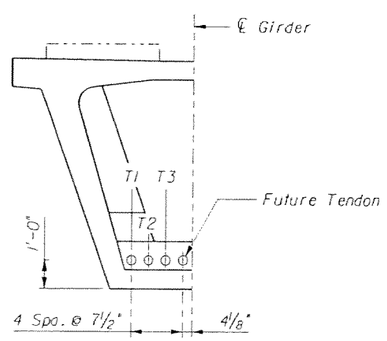

SECTION B-B

NOTES:

1. All dimensions are along ℄ Girder (unless otherwise noted).
2. Tendon T1 and T2 are 19 x 0.6"Ø strand tendons.
   Tendon T3 is a 12 x 0.6"Ø strand tendon.

SUBJECT TO CHANGE

GTH	1-Nov-05					
Designed by	Date					
AHQ	5-May-06					
Drawn by	Date					
JER	5-May-06					
Checked by	Date					
TWS	5-May-06					
Approved by	Date	No.	Date	By / Chk	App.	Revisions

NORTH CORRIDOR METRORAIL EXTENSION - PRELIMINARY ENGINEERING (100% SUBMITTAL)

STRUCTURES - GUIDEWAY (CONCRETE)

MIAMI-DADE COUNTY

MIAMI-DADE TRANSIT

PARSONS
7600 CORPORATE CENTER DRIVE, SUITE 500
MIAMI, FLORIDA 33126
PHONE: (786) 464-1000 FAX: (786) 845-7119
CERTIFICATE OF AUTHORIZATION NO. 1838

Aproved | Date | Approved | Date

135'-0" SPAN P.T. LAYOUT
SINGLE TRACK GUIDEWAY

Scale NTS | Drawing SGC- 168 | Sheet 379

5/8/2006 5:48:34 PM g:\646331_north_corridor\cadd\superstr\plt\layout_sl_135.dgn

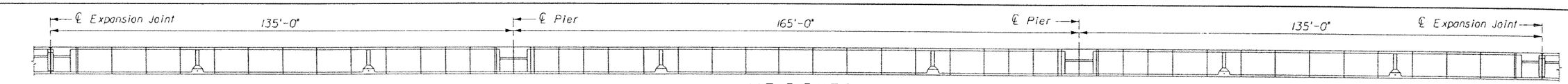

UNIT ELEVATION

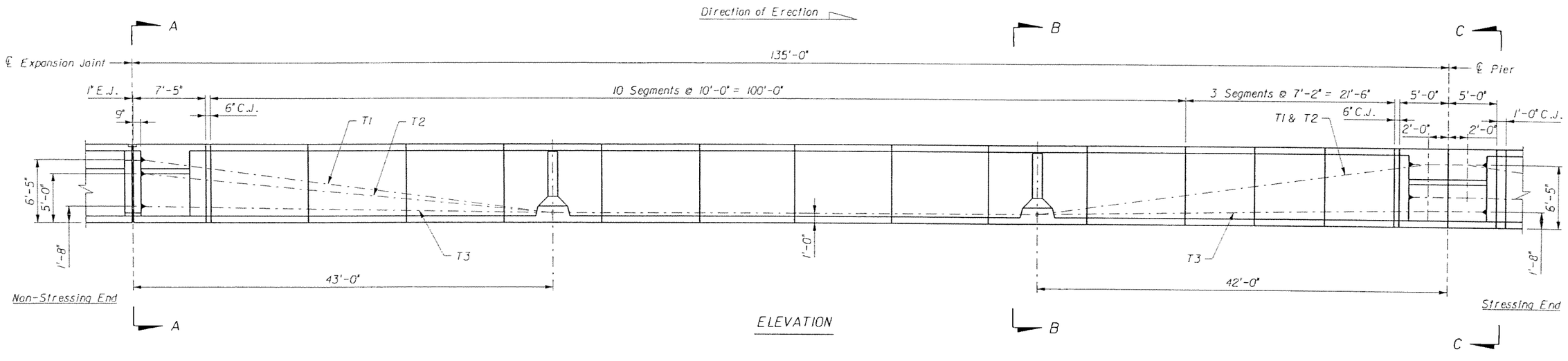

ELEVATION

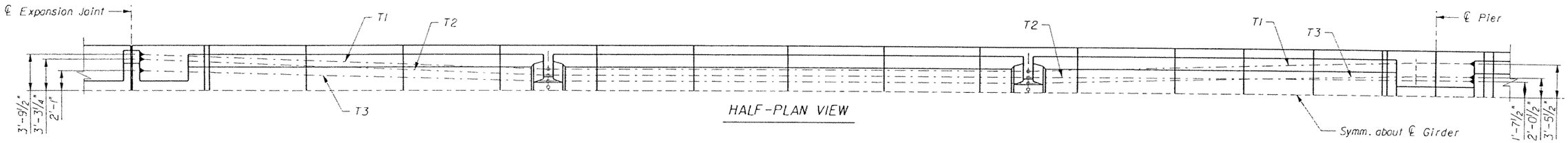

HALF-PLAN VIEW

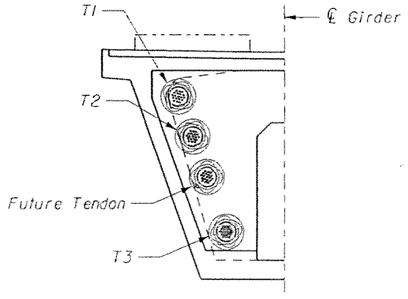

SECTION A-A

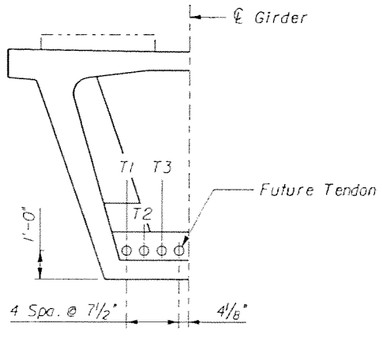

SECTION B-B

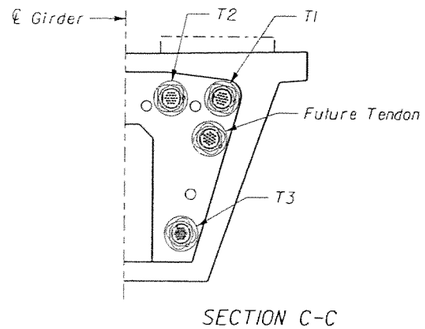

SECTION C-C

NOTES:

1. All dimensions are along ℄ Girder (unless otherwise noted).
2. Tendon T1 is a 19 x 0.6"Ø strand tendon.
   Tendons T2 and T3 are 12 x 0.6"Ø strand tendons.

SUBJECT TO CHANGE

GTH	1-Nov-05					
Designed by	Date					
AHO	5-May-06					
Drawn by	Date					
JER	5-May-06					
Checked by	Date					
TWS	5-May-06					
Approved by	Date	No.	Date	By / Chk	App.	Revisions

NORTH CORRIDOR METRORAIL EXTENSION - PRELIMINARY ENGINEERING (100% SUBMITTAL)

MIAMI-DADE COUNTY

MIAMI-DADE TRANSIT

PARSONS
7600 CORPORATE CENTER DRIVE, SUITE 500
MIAMI, FLORIDA 33126
PHONE: (786) 464-1000 FAX: (786) 845-7119
CERTIFICATE OF AUTHORIZATION NO. 1838

Approved | Date | Approved | Date

STRUCTURES - GUIDEWAY (CONCRETE)

CONTINUOUS UNIT TYPE 2
P.T. LAYOUT 1
SINGLE TRACK GUIDEWAY

Scale NTS | Drawing SGC- 169 | Sheet 380

5/8/2006 5:48:36 PM g:\646331_north_corridor\cadd\supers\pt\layout_sl_cont unit-1.dgn

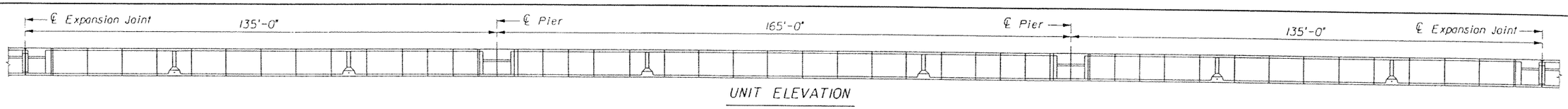

UNIT ELEVATION

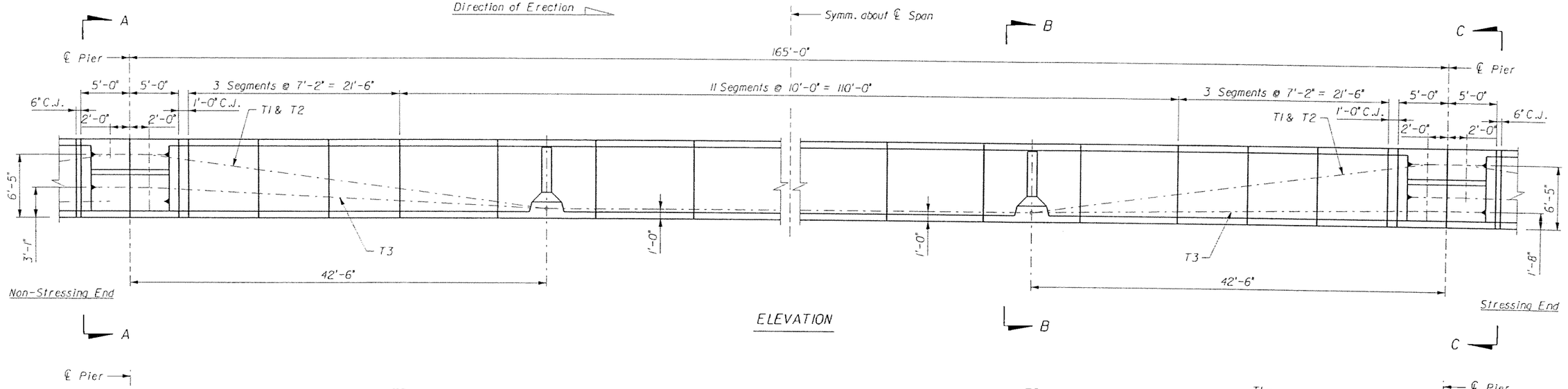

ELEVATION

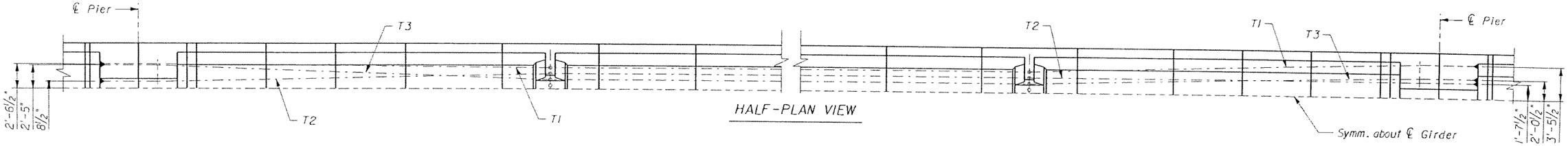

HALF-PLAN VIEW

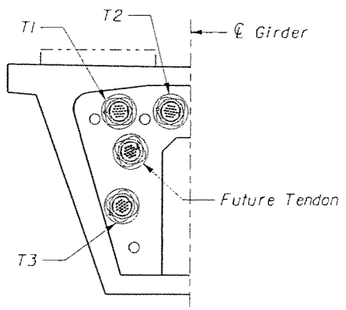

SECTION A-A

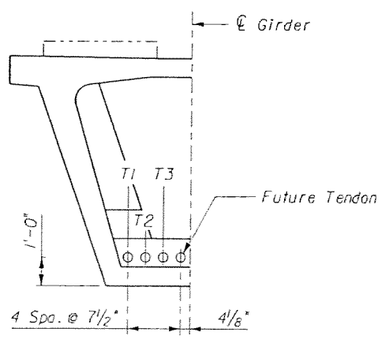

SECTION B-B

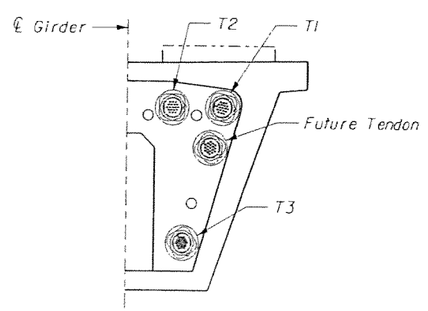

SECTION C-C

NOTES:

1. All dimensions are along ℄ Girder (unless otherwise noted).
2. Tendons T1, T2 and T3 are 19 x 0.6"Ø strand tendons.

GTH Designed by	1-Nov-05 Date					
AHQ Drawn by	5-May-06 Date					
JER Checked by	5-May-06 Date					
TWS Approved by	5-May-06 Date	No.	Date	By / Chk	App.	Revisions

NORTH CORRIDOR METRORAIL EXTENSION - PRELIMINARY ENGINEERING (100% SUBMITTAL)

MIAMI-DADE COUNTY

MIAMI-DADE TRANSIT

PARSONS
7600 CORPORATE CENTER DRIVE, SUITE 500
MIAMI, FLORIDA 33126
PHONE: (786) 464-1000 FAX: (786) 845-7119
CERTIFICATE OF AUTHORIZATION NO. 1838

Approved | Date | Approved | Date

SUBJECT TO CHANGE

STRUCTURES - GUIDEWAY (CONCRETE)

CONTINUOUS UNIT TYPE 2
P.T. LAYOUT 2
SINGLE TRACK GUIDEWAY

Scale NTS | Drawing SGC- 170 | Sheet 381

5/8/2006 5:48:38 PM g:\646331_north_corridor\cadd\superstr\pt\layout_st_cont unit-2.dgn

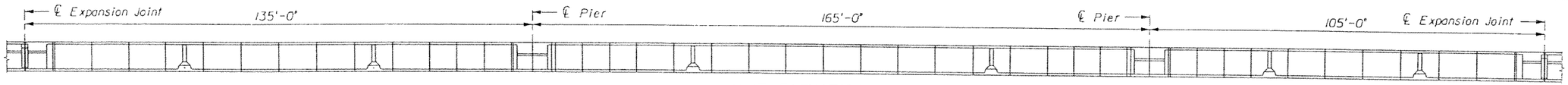

UNIT ELEVATION

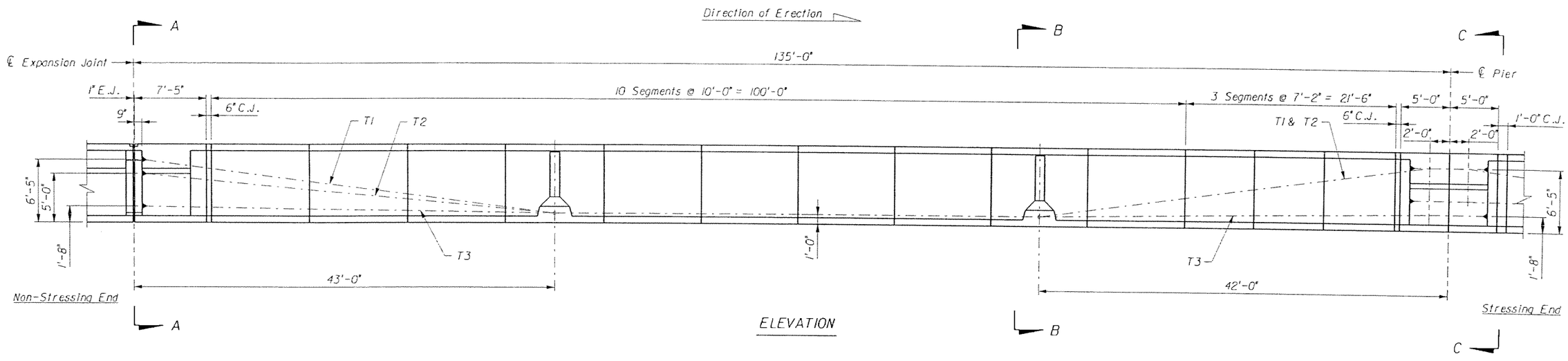

ELEVATION

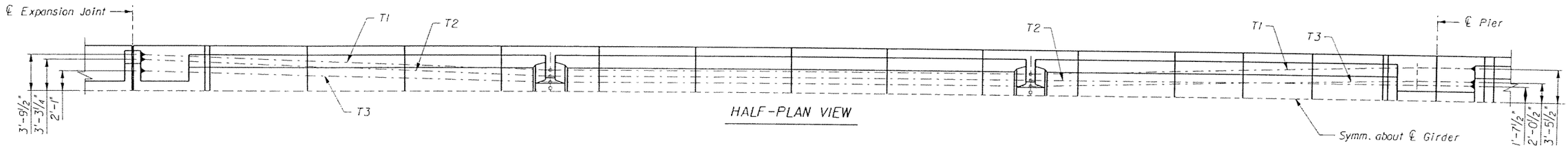

HALF-PLAN VIEW

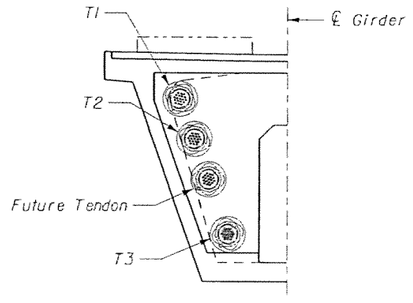

SECTION A-A

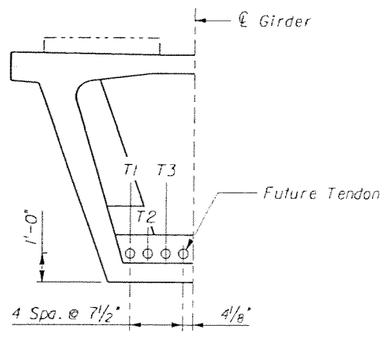

SECTION B-B

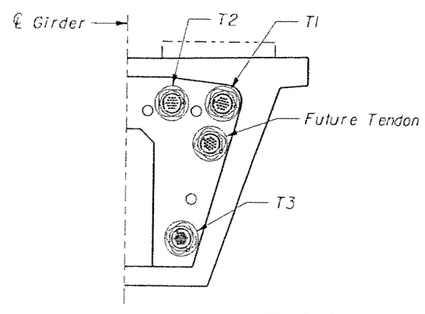

SECTION C-C

NOTES:

1. All dimensions are along ℄ Girder (unless otherwise noted).
2. Tendon T1 is a 19 x 0.6"Φ strand tendon.
   Tendons T2 and T3 are 12 x 0.6"Φ strand tendons.

SUBJECT TO CHANGE

GTH Designed by	1-Nov-05 Date					
AHQ Drawn by	5-May-06 Date					
JER Checked by	5-May-06 Date					
TWS Approved by	5-May-06 Date	No.	Date	By / Chk	App.	Revisions

NORTH CORRIDOR METRORAIL EXTENSION - PRELIMINARY ENGINEERING (100% SUBMITTAL)

MIAMI-DADE COUNTY

MIAMI-DADE TRANSIT

PARSONS
7600 CORPORATE CENTER DRIVE, SUITE 500
MIAMI, FLORIDA 33126
PHONE: (786) 464-1000 FAX: (786) 845-7119
CERTIFICATE OF AUTHORIZATION NO. 1838

Approved | Date | Approved | Date

STRUCTURES - GUIDEWAY (CONCRETE)

CONTINUOUS UNIT TYPE 2a
P.T. LAYOUT 1
SINGLE TRACK GUIDEWAY

Scale NTS | Drawing SGC- 171 | Sheet 382

5/8/2006 5:48:39 PM g:\646331_north_corridor\cadd\superstr\ptlayout_st_cont unit-1_2a.dgn

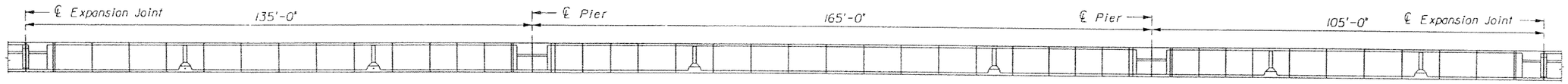

UNIT ELEVATION

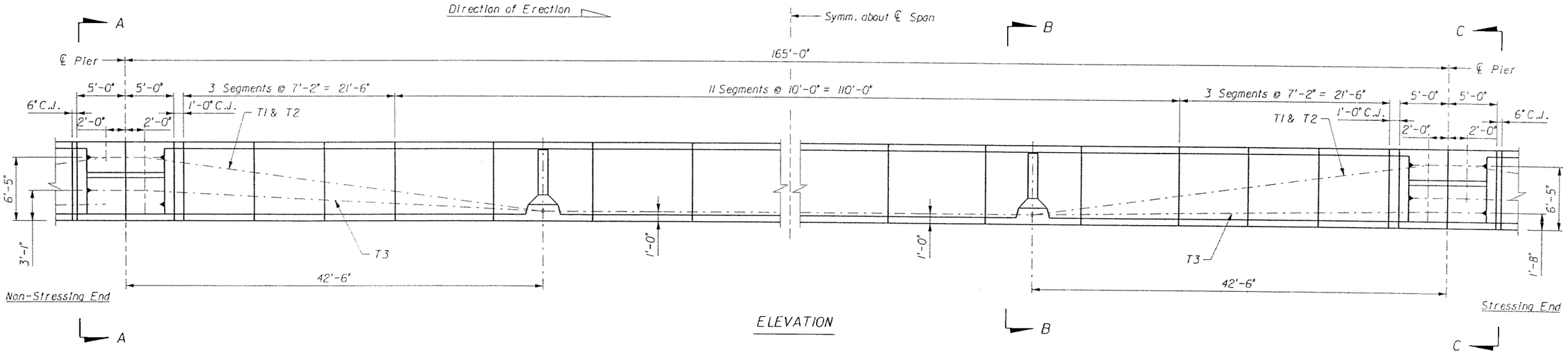

ELEVATION

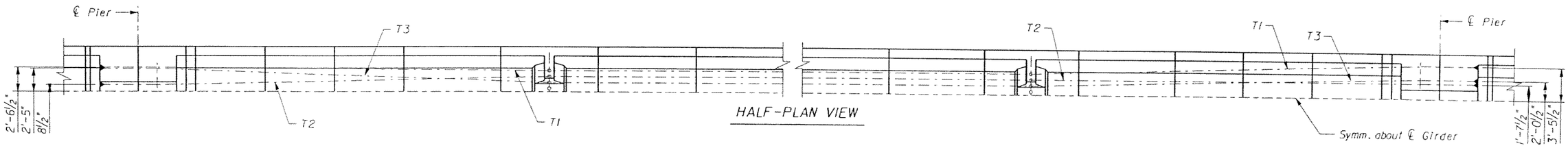

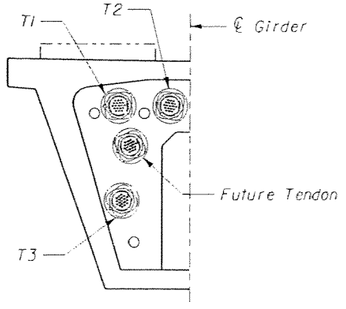

SECTION A-A

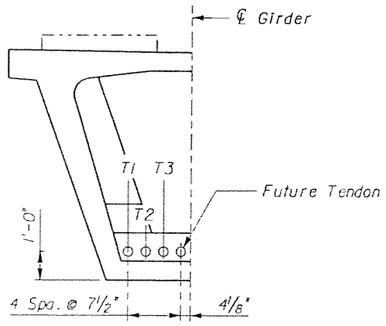

SECTION B-B

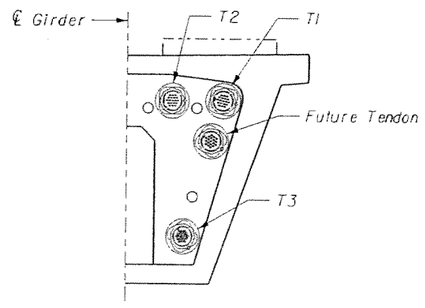

SECTION C-C

NOTES:

1. All dimensions are along ℄ Girder (unless otherwise noted).
2. Tendons T1, T2 and T3 are 19 x 0.6"Ø strand tendons.

GTH Designed by	1-Nov-05 Date					
AHQ Drawn by	5-May-06 Date					
JER Checked by	5-May-06 Date					
TWS Approved by	5-May-06 Date	No.	Date	By / Chk	App.	Revisions

NORTH CORRIDOR METRORAIL EXTENSION - PRELIMINARY ENGINEERING (100% SUBMITTAL)

SUBJECT TO CHANGE

STRUCTURES - GUIDEWAY (CONCRETE)

MIAMI-DADE COUNTY

MIAMI-DADE TRANSIT

PARSONS
7600 CORPORATE CENTER DRIVE, SUITE 500
MIAMI, FLORIDA 33126
PHONE: (786) 464-1000 FAX: (786) 845-7119
CERTIFICATE OF AUTHORIZATION NO. 1838

Approved | Date | Approved | Date

CONTINUOUS UNIT TYPE 2a
P.T. LAYOUT 2
SINGLE TRACK GUIDEWAY

Scale NTS | Drawing SGC- 172 | Sheet 383

5/8/2006 5:48:41 PM g:\546331_north_corridor\cadd\superstr\ptlayout_st_cont unit-2_2a.dgn

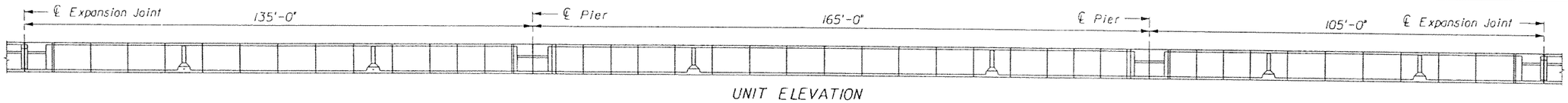

UNIT ELEVATION

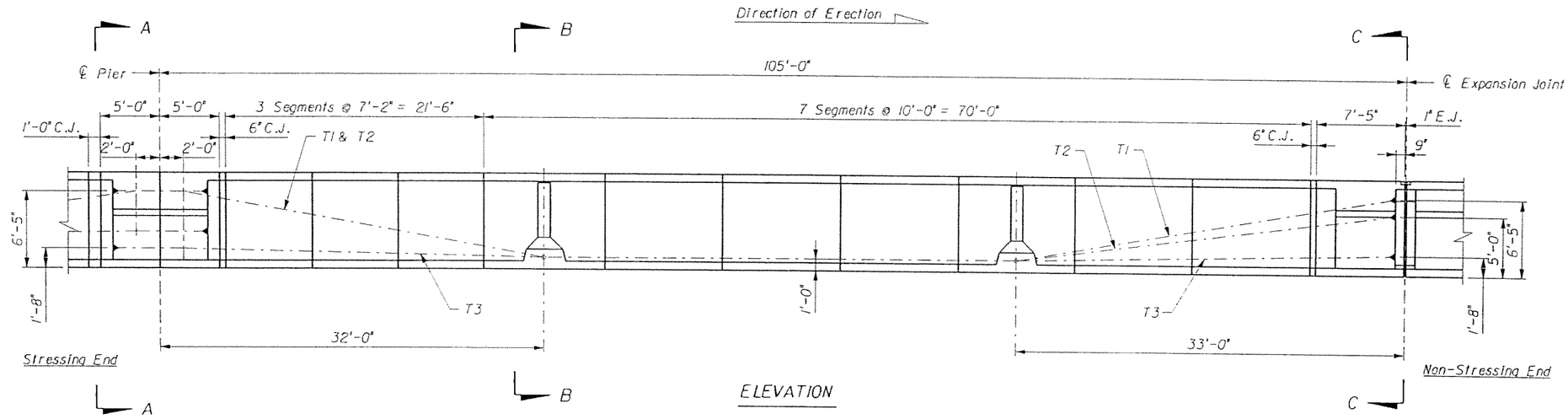

ELEVATION

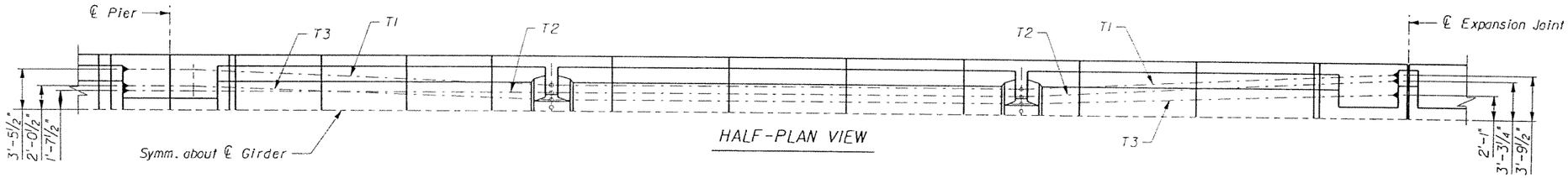

HALF-PLAN VIEW

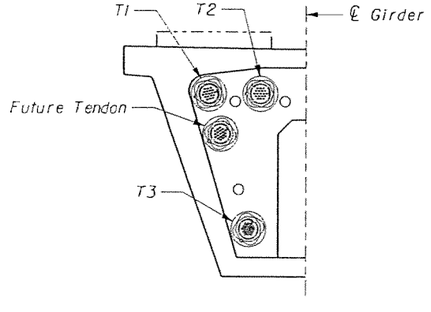

SECTION A-A

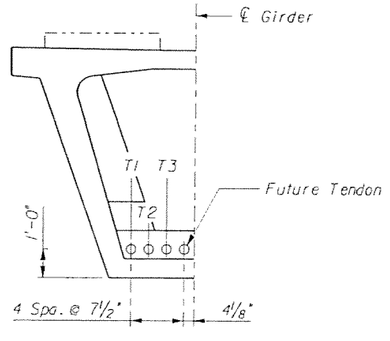

SECTION B-B

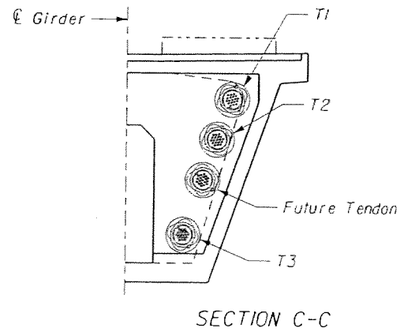

SECTION C-C

NOTES:

1. All dimensions are along ℄ Girder (unless otherwise noted).
2. Tendon T1 is a 19 x 0.5"Φ strand tendon.
   Tendons T2 and T3 are 12 x 0.6"Φ strand tendons.

GTH Designed by	1-Nov-05 Date						
AHQ Drawn by	5-May-06 Date						
JER Checked by	5-May-06 Date						
TWS Approved by	5-May-06 Date	No.	Date	By / Chk	App.	Revisions	

NORTH CORRIDOR METRORAIL EXTENSION - PRELIMINARY ENGINEERING (100% SUBMITTAL)

SUBJECT TO CHANGE

STRUCTURES - GUIDEWAY (CONCRETE)

MIAMI-DADE COUNTY

MIAMI-DADE TRANSIT

PARSONS
7600 CORPORATE CENTER DRIVE, SUITE 500
MIAMI, FLORIDA 33126
PHONE: (786) 464-1000 FAX: (786) 845-7119
CERTIFICATE OF AUTHORIZATION NO. 1836

Approved | Date | Approved | Date

CONTINUOUS UNIT TYPE 2a
P.T. LAYOUT 3
SINGLE TRACK GUIDEWAY

Scale NTS | Drawing SGC- 173 | Sheet 384

5/8/2006 5:48:42 PM g:\646331_north_corridor\cadd\superstr\ptlayout_st_cont unit-3_2a.dgn

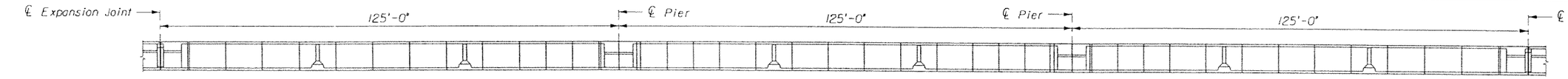

UNIT ELEVATION

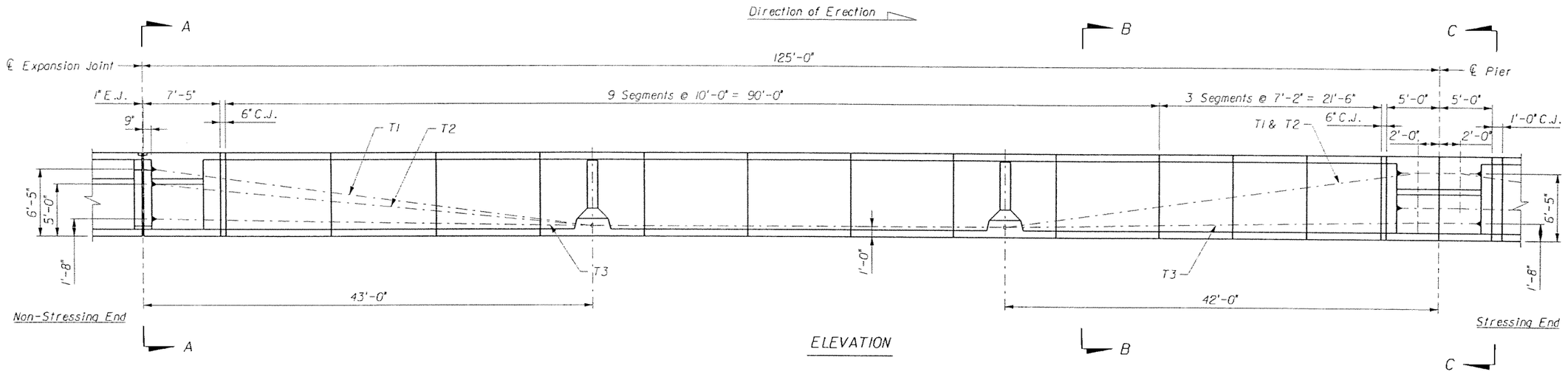

ELEVATION

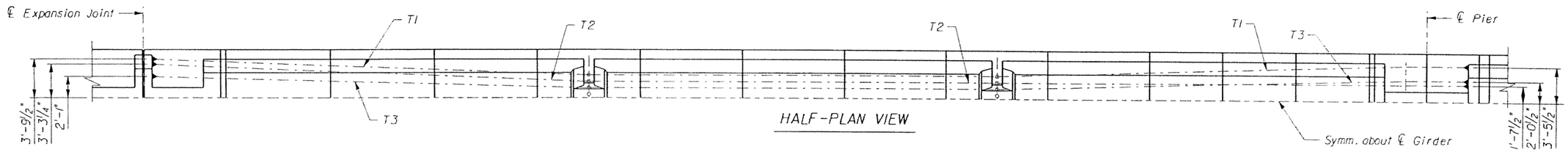

HALF-PLAN VIEW

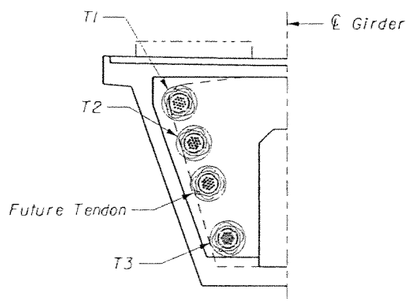

SECTION A-A

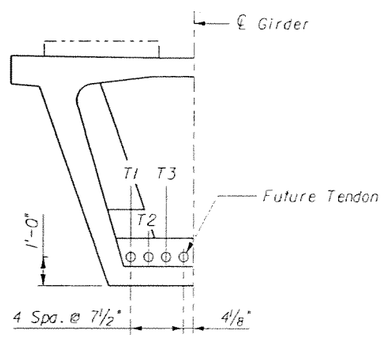

SECTION B-B

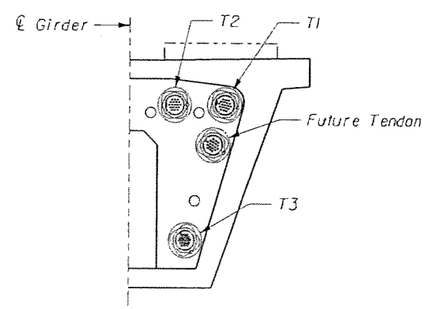

SECTION C-C

NOTES:

1. All dimensions are along ℄ Girder (unless otherwise noted).
2. Tendon T1 is a 19 x 0.6"Ø strand tendon.
   Tendons T2 and T3 are 12 x 0.6"Ø strand tendons.

SUBJECT TO CHANGE

GTH Designed by	1-Nov-05 Date					
AHO Drawn by	5-May-06 Date					
JER Checked by	5-May-06 Date					
TWS Approved by	5-May-06 Date	No.	Date	By / Chk	App.	Revisions

NORTH CORRIDOR METRORAIL EXTENSION - PRELIMINARY ENGINEERING (100% SUBMITTAL)

MIAMI-DADE COUNTY

MIAMI-DADE TRANSIT

PARSONS
7600 CORPORATE CENTER DRIVE, SUITE 500
MIAMI, FLORIDA 33126
PHONE: (786) 464-1000 FAX: (786) 845-7119
CERTIFICATE OF AUTHORIZATION NO. 1838

Approved | Date

Approved | Date

STRUCTURES - GUIDEWAY (CONCRETE)

CONTINUOUS UNIT TYPE 2b
P.T. LAYOUT 1
SINGLE TRACK GUIDEWAY

Scale NTS | Drawing SGC- 174 | Sheet 385

5/8/2006 5:46:45 PM g:\646331_north_corridor\cadd\supers\ptlayout_st_cont unit-1_2b.dgn

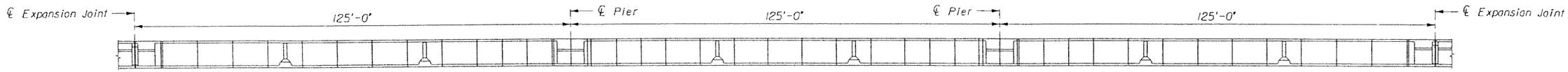

UNIT ELEVATION

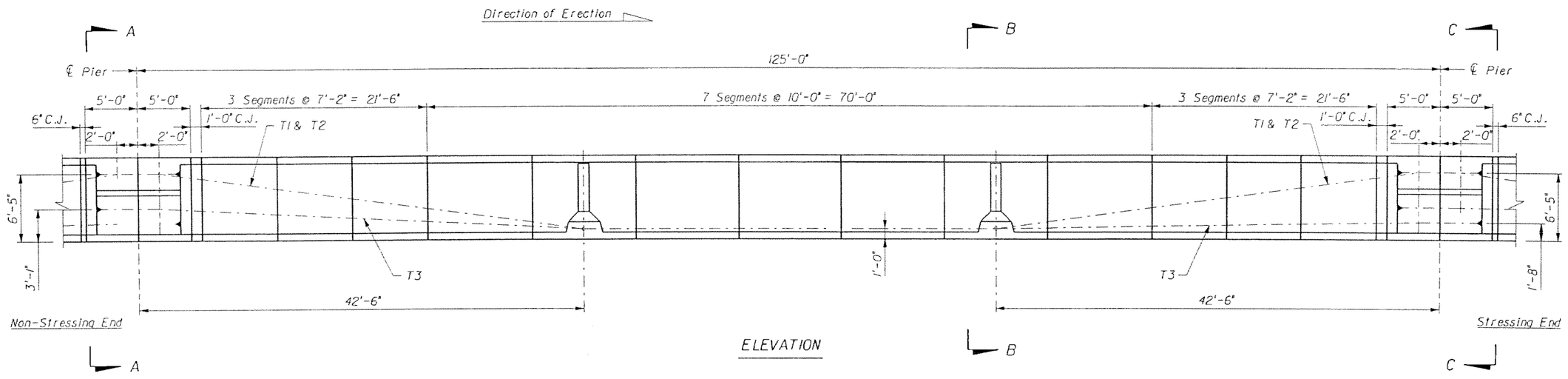

ELEVATION

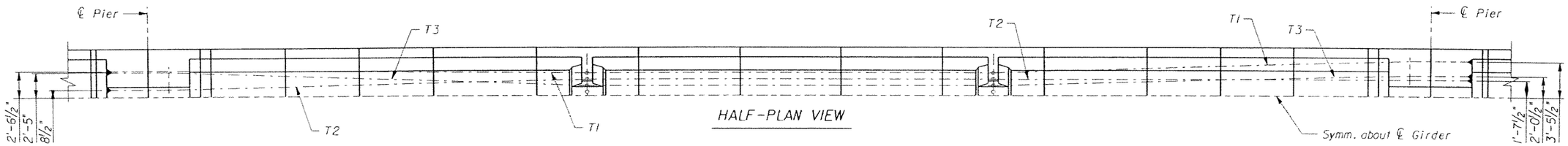

HALF-PLAN VIEW

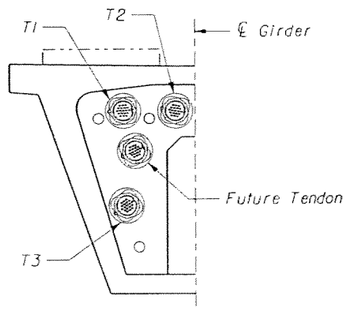

SECTION A-A

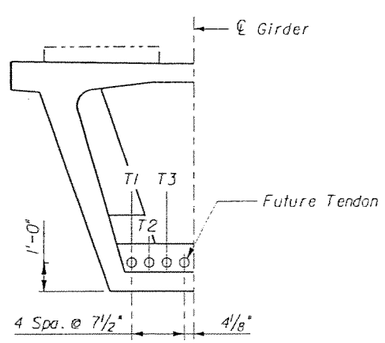

SECTION B-B

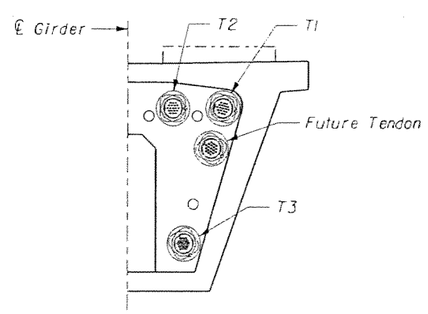

SECTION C-C

NOTES:

1. All dimensions are along ℄ Girder (unless otherwise noted).
2. Tendons T1, T2 and T3 are 19 x 0.6"Ø strand tendons.

SUBJECT TO CHANGE

GTH Designed by	1-Nov-05 Date					
AHQ Drawn by	5-May-06 Date					
JER Checked by	5-May-06 Date					
TWS Approved by	5-May-06 Date	No.	Date	By / Chk	App.	Revisions

NORTH CORRIDOR METRORAIL EXTENSION - PRELIMINARY ENGINEERING (100% SUBMITTAL)

STRUCTURES - GUIDEWAY (CONCRETE)

MIAMI-DADE COUNTY

MIAMI-DADE TRANSIT

PARSONS
7600 CORPORATE CENTER DRIVE, SUITE 500
MIAMI, FLORIDA 33126
PHONE: (786) 464-1000 FAX: (786) 845-7119
CERTIFICATE OF AUTHORIZATION NO. 1838

Approved | Date | Approved | Date

CONTINUOUS UNIT TYPE 2b
P.T. LAYOUT 2
SINGLE TRACK GUIDEWAY

Scale NTS | Drawing SGC- 175 | Sheet 386

5/8/2006 5:48:46 PM g:\646331_north_corridor\cadd\superstr\plt\layout_sl_cont unit-2_2b.dgn

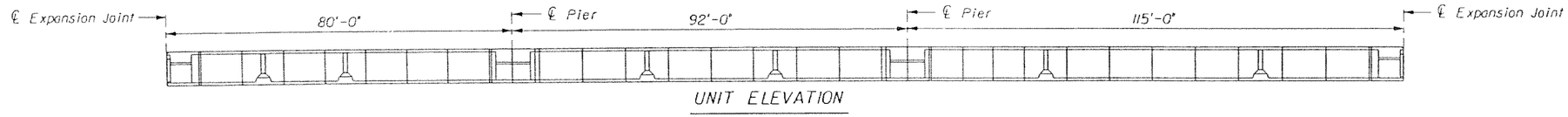

UNIT ELEVATION

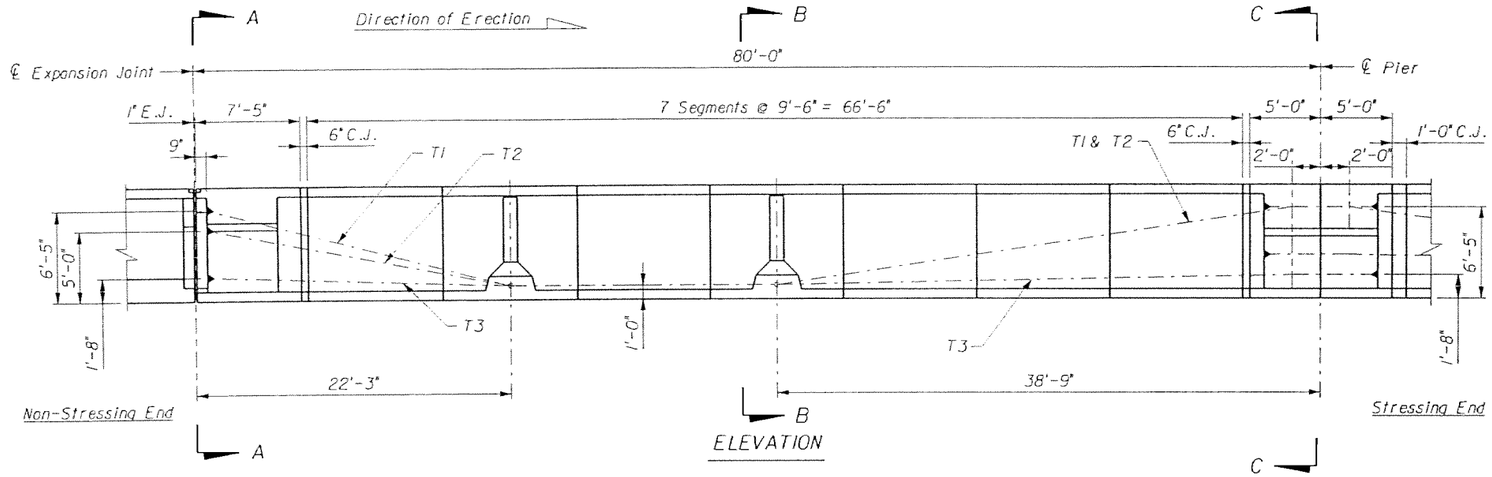

ELEVATION

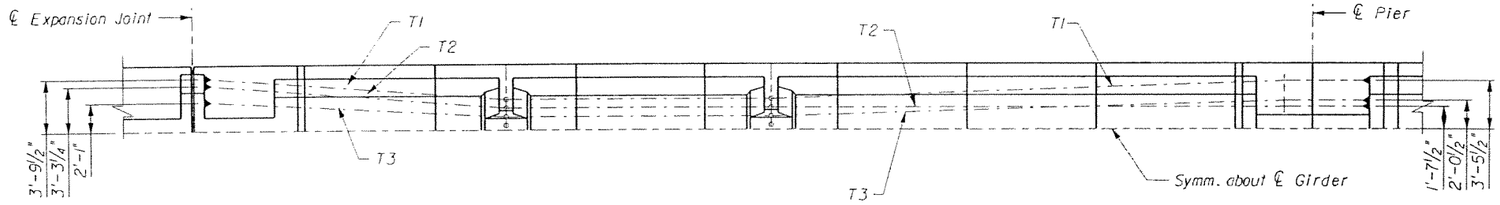

HALF-PLAN VIEW

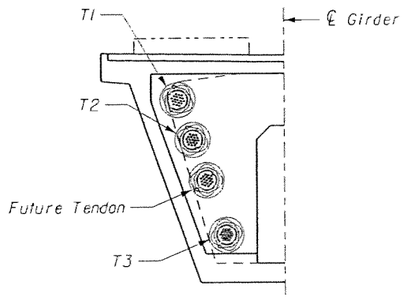

SECTION A-A

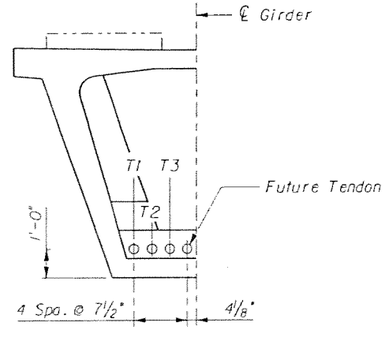

SECTION B-B

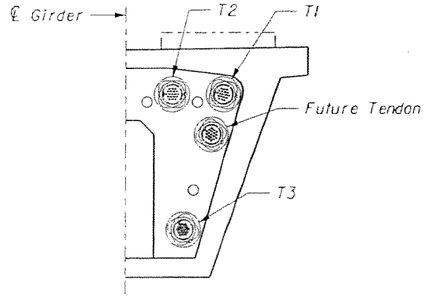

SECTION C-C

NOTES:

1. All dimensions are along ℄ Girder (unless otherwise noted).
2. Tendon T1 is a 19 x 0.6"Ø strand tendon.
   Tendons T2 and T3 are 12 x 0.6"Ø strand tendons.

SUBJECT TO CHANGE

GTH Designed by	1-Nov-05 Date					
AHQ Drawn by	5-May-06 Date					
JER Checked by	5-May-05 Date					
TWS Approved by	5-May-06 Date	No.	Date	By / Chk	App.	Revisions

NORTH CORRIDOR METRORAIL EXTENSION - PRELIMINARY ENGINEERING (100% SUBMITTAL)

MIAMI-DADE COUNTY

MIAMI-DADE TRANSIT

PARSONS
7600 CORPORATE CENTER DRIVE, SUITE 500
MIAMI, FLORIDA 33126
PHONE: (786) 464-1000 FAX: (786) 845-7119
CERTIFICATE OF AUTHORIZATION NO. 1838

Approved | Date | Approved | Date

STRUCTURES - GUIDEWAY (CONCRETE)

CONTINUOUS UNIT TYPE 1f
P.T. LAYOUT 1
SINGLE TRACK GUIDEWAY

Scale NTS | Drawing SGC- 176 | Sheet 387

5/8/2006 5:48:48 PM g:\646331_north_corridor\cadd\superstr\ptlayout_st_cont unit-1_2c.dgn

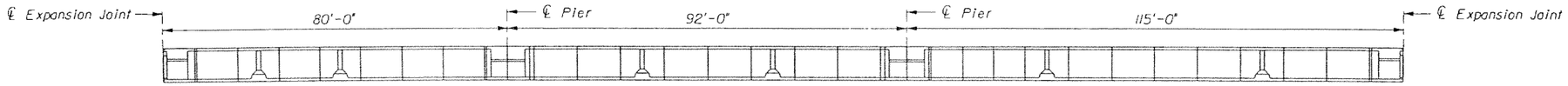

UNIT ELEVATION

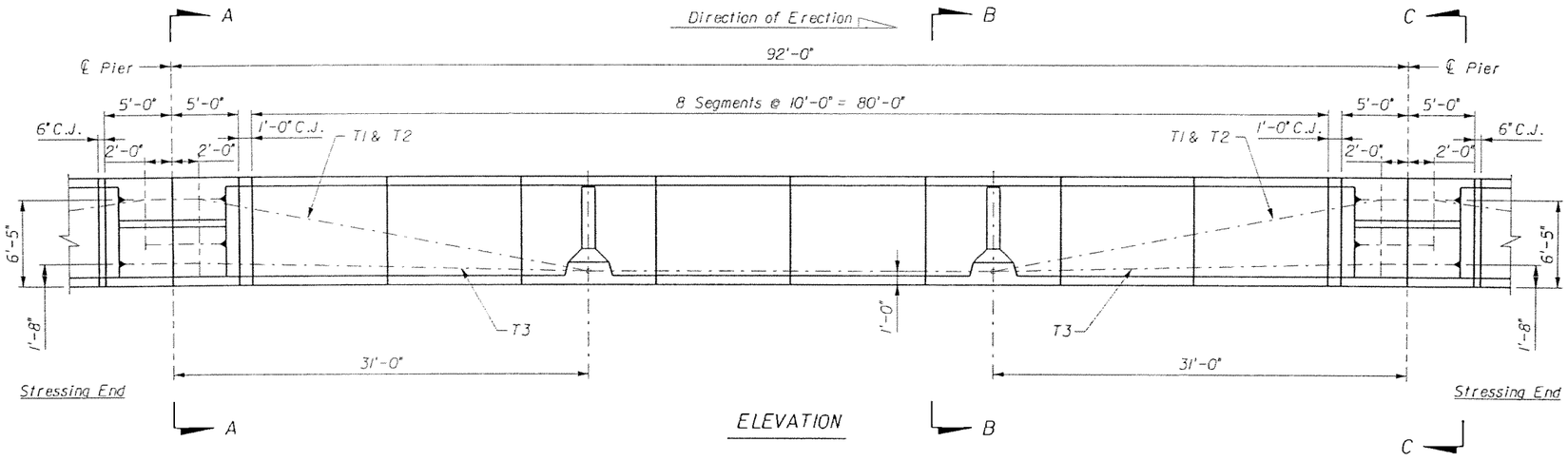

ELEVATION

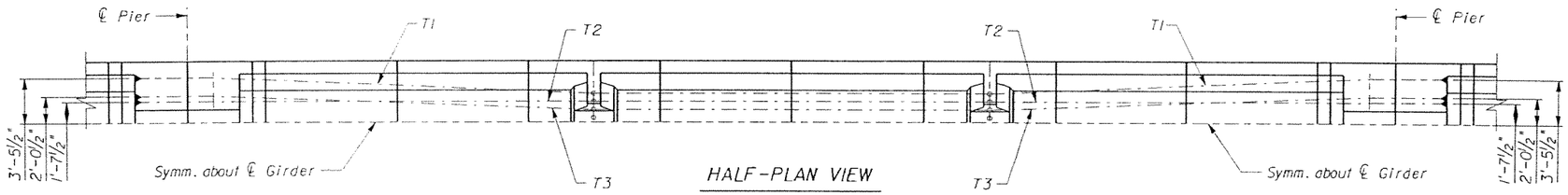

HALF-PLAN VIEW

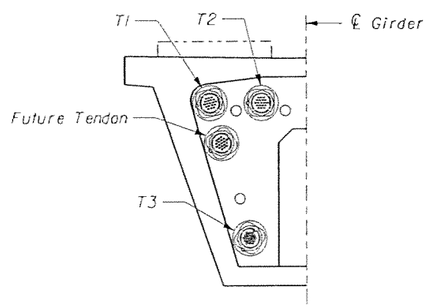

SECTION A-A

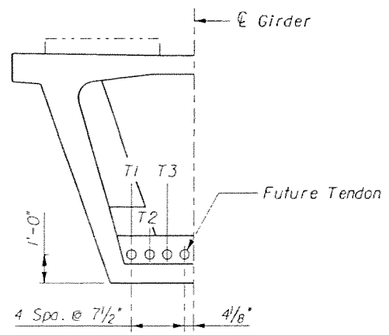

SECTION B-B

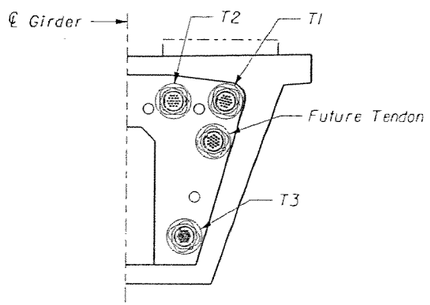

SECTION C-C

NOTES:

1. All dimensions are along ℄ Girder (unless otherwise noted).
2. Tendon T1 is a 19 x 0.6"Φ strand tendon.
   Tendons T2 and T3 are 12 x 0.6"Φ strand tendons.

SUBJECT TO CHANGE

GTH Designed by	1-Nov-05 Date					
AHO Drawn by	5-May-06 Date					
JER Checked by	5-May-06 Date					
TWS Approved by	5-May-06 Date	No.	Date	By / Chk	App.	Revisions

NORTH CORRIDOR METRORAIL EXTENSION - PRELIMINARY ENGINEERING (100% SUBMITTAL)

STRUCTURES - GUIDEWAY (CONCRETE)

MIAMI-DADE COUNTY

MIAMI-DADE TRANSIT

PARSONS
7600 CORPORATE CENTER DRIVE, SUITE 500
MIAMI, FLORIDA 33126
PHONE: (786) 464-1000 FAX: (786) 845-7119
CERTIFICATE OF AUTHORIZATION NO. 1838

Approved | Date | Approved | Date

CONTINUOUS UNIT TYPE 1f
P.T. LAYOUT 2
SINGLE TRACK GUIDEWAY

Scale NTS | Drawing SGC- 177 | Sheet 228

5/8/2006 5:48:50 PM g:\646331_north_corridor\cadd\supers\ptlayout_st_cont unit-2_2c.dgn

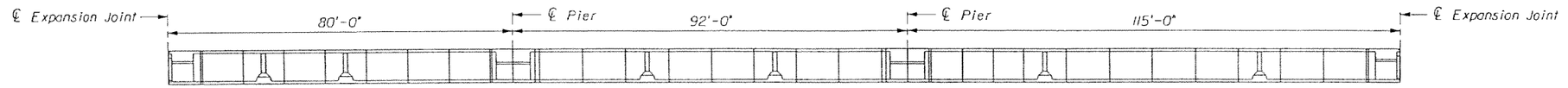

UNIT ELEVATION

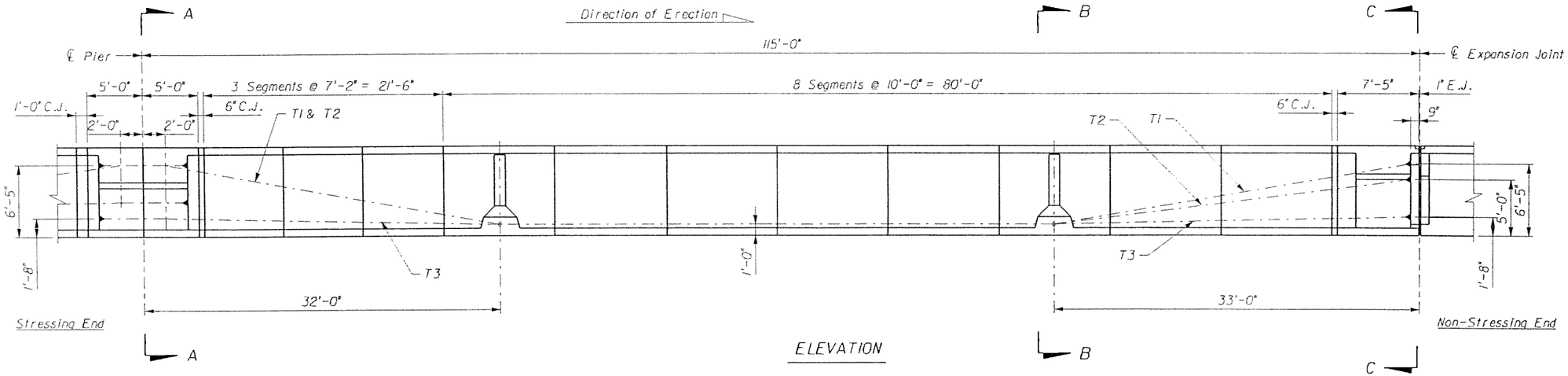

ELEVATION

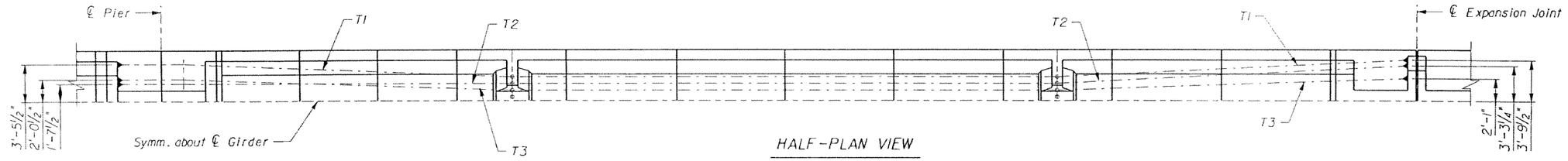

HALF-PLAN VIEW

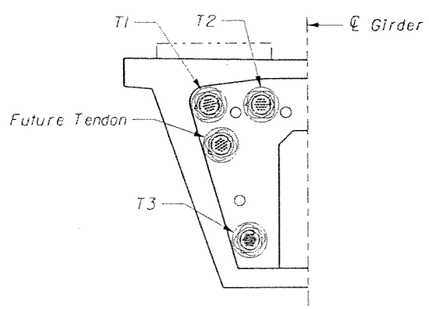

SECTION A-A

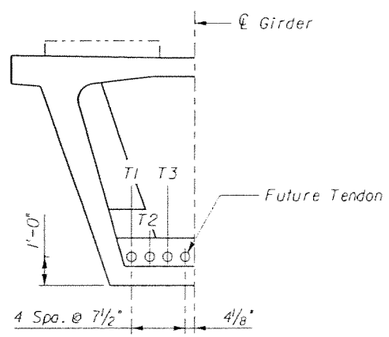

SECTION B-B

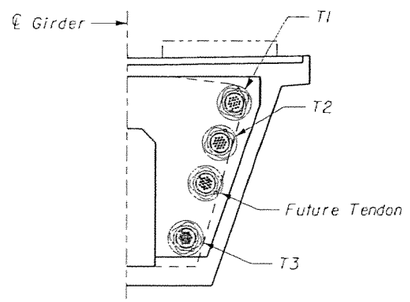

SECTION C-C

NOTES:

1. All dimensions are along ℄ Girder (unless otherwise noted).
2. Tendon T1 is a 19 x 0.6"Ø strand tendon.
   Tendons T2 and T3 are 12 x 0.6"Ø strand tendons.

SUBJECT TO CHANGE

GTH Designed by	1-Nov-05 Date					
AHQ Drawn by	5-May-06 Date					
JER Checked by	5-May-06 Date					
TWS Approved by	5-May-06 Date	No.	Date	By / Chk	App.	Revisions

NORTH CORRIDOR METRORAIL EXTENSION - PRELIMINARY ENGINEERING (100% SUBMITTAL)

MIAMI-DADE COUNTY

MIAMI-DADE TRANSIT

PARSONS
7600 CORPORATE CENTER DRIVE, SUITE 500
MIAMI, FLORIDA 33126
PHONE: (786) 464-1000 FAX: (786) 845-7119
CERTIFICATE OF AUTHORIZATION NO. 1838

Approved | Date | Approved | Date

STRUCTURES - GUIDEWAY (CONCRETE)

CONTINUOUS UNIT TYPE 1f
P.T. LAYOUT 3
SINGLE TRACK GUIDEWAY

Scale NTS | Drawing SGC- 178 | Sheet 339

5/5/2006 5:48:51 PM g:\646331_north_corridor\cadd\superstr\ptlayout_st_cont unit-3_2c.dgn

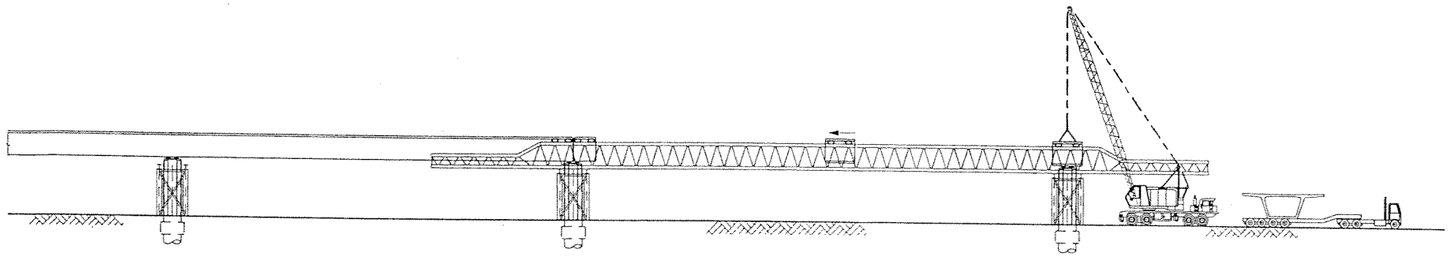

ELEVATION
SEGMENT PLACEMENT

PHASE I - SEGMENT PLACEMENT

1. Previous span complete. Truss has been advanced.
2. Precast superstructure segments are loaded by ground base crane.
3. Place each segment one by one on three alignment devices.
4. After all segments are loaded, adjust grade and alignment of each segment.
5. Continuous unit spans have C.I.P. closure joints at ends.

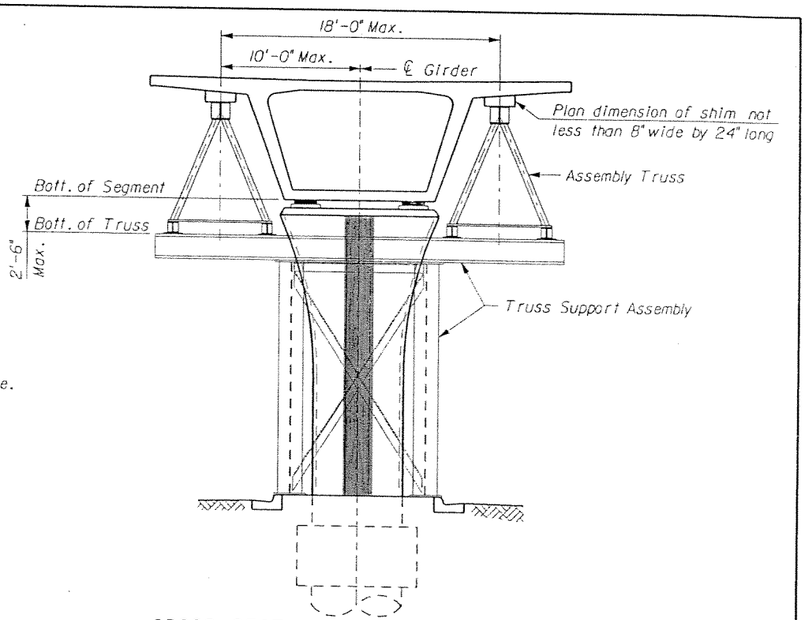

CROSS-SECTION AT DUAL TRACK PIER
LOADED ASSEMBLY TRUSSES

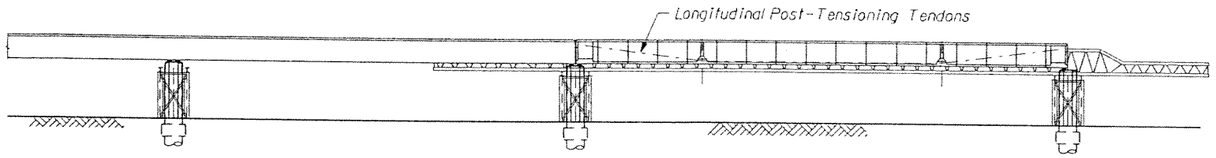

ELEVATION
SEGMENT PLACEMENT

PHASE II - STRESSING LONGITUDINAL TENDONS

1. Polyethylene ducts positioned between expansion joint segments and deviation saddles.
2. Longitudinal post-tensioning tendons pulled through ducts.
3. Stress tendons by pairs or procedure approved by the engineer to final stress.
4. Release pier or expansion joint segment onto bearing.

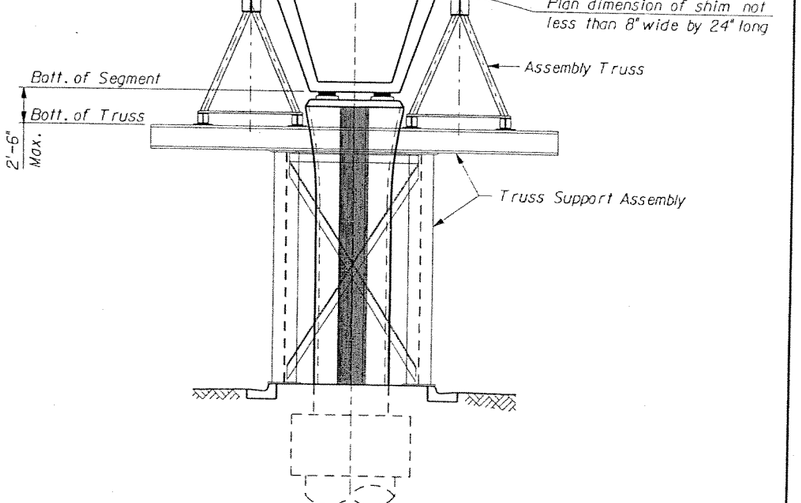

CROSS-SECTION AT SINGLE TRACK PIER
LOADED ASSEMBLY TRUSSES

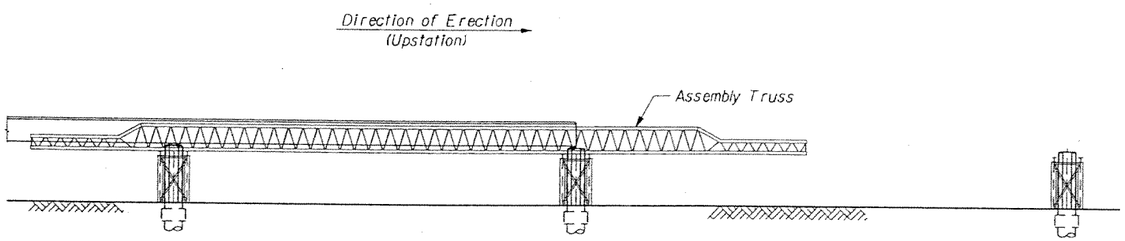

ELEVATION
SEGMENT PLACEMENT

PHASE III - TRUSS ADVANCEMENT

1. Truss support bracket is positioned at next pier.
2. Truss is self-launched forward to the next pier.

GTH Designed by	1-Nov-05 Date					
JLS Drawn by	5-May-06 Date					
JER Checked by	5-May-06 Date					
TWS Approved by	5-May-06 Date	No.	Date	By / Chk	App.	Revisions

NORTH CORRIDOR METRORAIL EXTENSION - PRELIMINARY ENGINEERING (100% SUBMITTAL)

SUBJECT TO CHANGE

STRUCTURES - GUIDEWAY (CONCRETE)

MIAMI-DADE COUNTY

MIAMI-DADE TRANSIT

PARSONS
7600 CORPORATE CENTER DRIVE, SUITE 500
MIAMI, FLORIDA 33126
PHONE: (786) 464-1000 FAX: (786) 845-7119
CERTIFICATE OF AUTHORIZATION NO. 1838

ERECTION SCHEMATIC
DUAL AND SINGLE TRACK SEGMENTS

Approved | Date | Approved | Date | Scale NTS | Drawing SGC- 179 | Sheet 390

5/9/2006 3:19:38 PM g:\646331_north_corridor\cadd\dgn\new alignment\erection_1.dgn

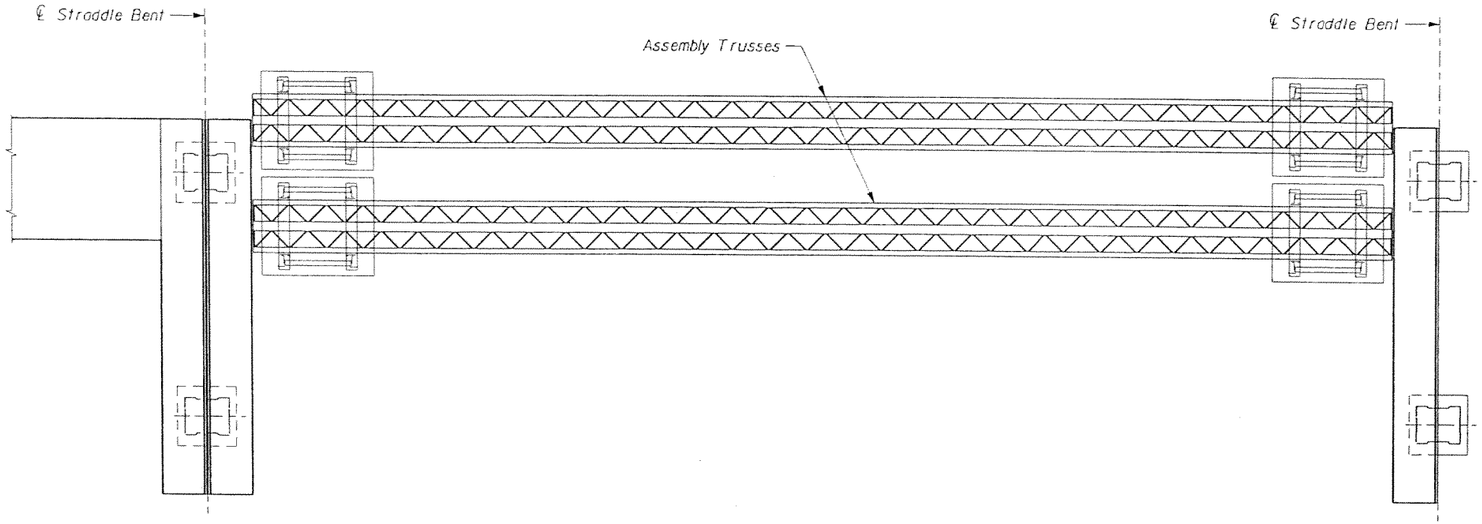

PLAN AT SPECIAL PIERS
(Straddle Bents shown,
Cantilever Piers similar)

NOTES:
1. Previous span complete.
2. Remove necessary sections of truss from typical configuration to allow placement of truss between piers.
3. Advance trusses and place on temporary piers.
4. Bearings in place on forward pier.
5. Set forward straddle bent on piers & stablize w/ jack and or shims.
6. Place typical segments on truss. Align, grade & cast C.I.P. closure joints.
7. Stress tendons in pairs or by procedure approved by the engineer to final force.
8. Release load from jacks to bearings.
9. Lower trusses & advance to next span.

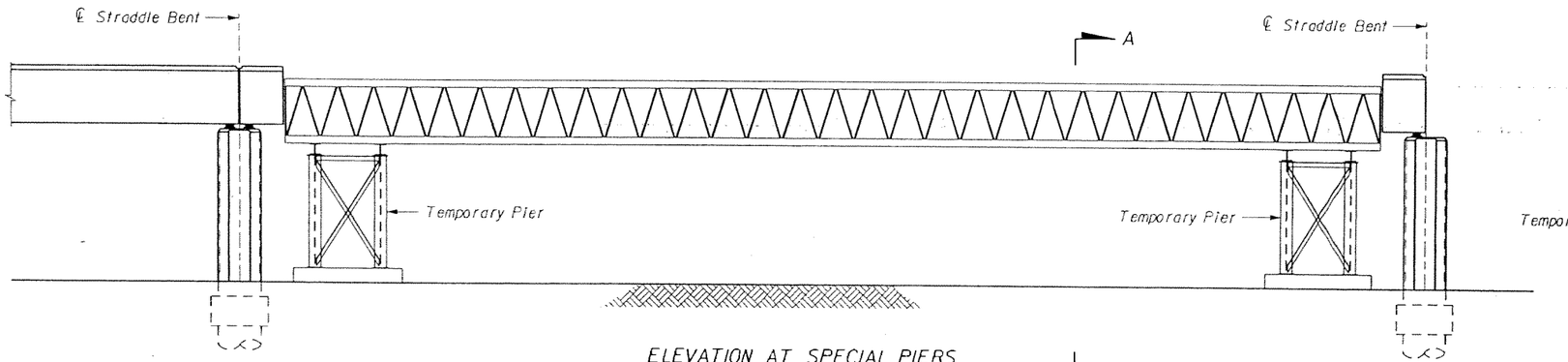

ELEVATION AT SPECIAL PIERS
(Straddle Bents shown, Cantilever Piers similar)

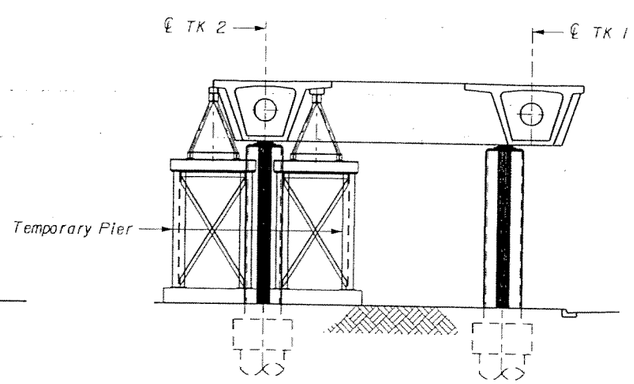

SECTION A-A

GTH 1-Nov-05 Designed by Date					
JLS 5-May-06 Drawn by Date					
JER 5-May-06 Checked by Date					
TWS 5-May-06 Approved by Date	No.	Date	By / Chk	App.	Revisions

NORTH CORRIDOR METRORAIL EXTENSION - PRELIMINARY ENGINEERING (100% SUBMITTAL)

SUBJECT TO CHANGE

STRUCTURES - GUIDEWAY (CONCRETE)

MIAMI-DADE COUNTY

MIAMI-DADE TRANSIT

PARSONS
7600 CORPORATE CENTER DRIVE, SUITE 500
MIAMI, FLORIDA 33126
PHONE: (786) 464-1000 FAX: (786) 845-7119
CERTIFICATE OF AUTHORIZATION NO. 1836

ERECTION SCHEMATIC
SPECIAL PIERS

Approved | Date | Approved | Date | Scale NTS | Drawing SGC- 180 | Sheet 391

5/9/2006 3:19:36 PM g:\646331_north_corridor\cadd\dgn\new alignment\erection_2.dgn

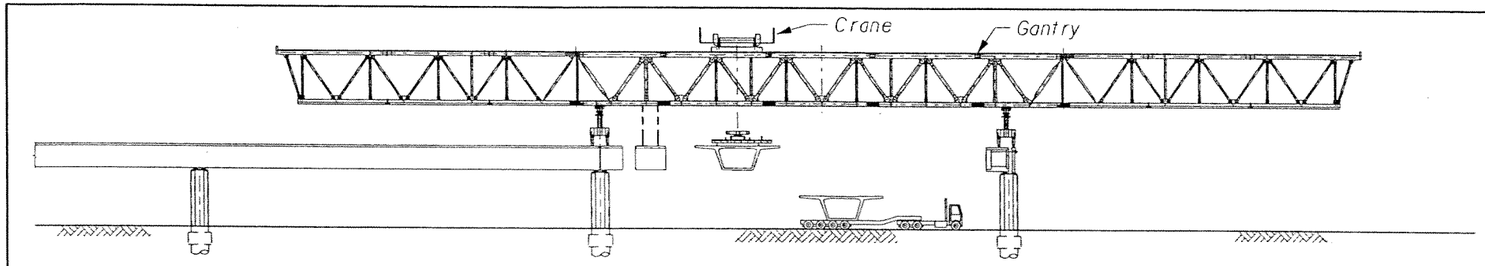

ELEVATION
SEGMENT PLACEMENT

PHASE I - SEGMENT PLACEMENT

1. Previous span complete. Truss has been advanced.
2. Precast superstructure segment are loaded by crane on gantry.
3. After all segments are loaded, adjust grade and alignment of each segment.
4. Continuous unit spans have C.J.P. closure joints at ends.

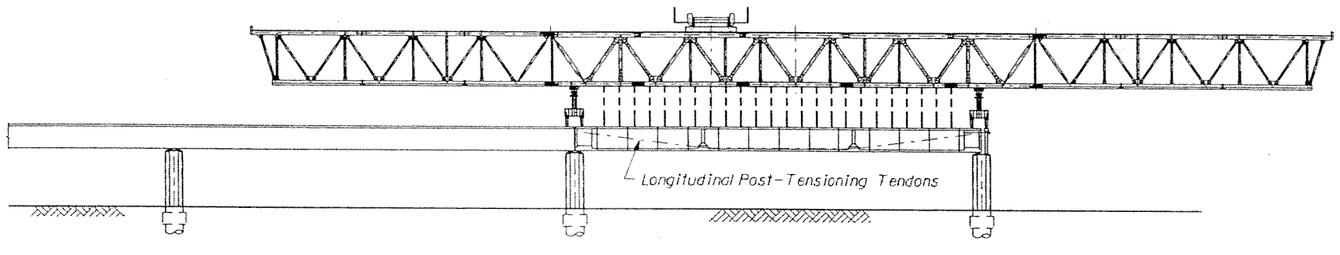

ELEVATION
SEGMENT PLACEMENT

PHASE II - STRESSING LONGITUDINAL TENDONS

1. Polyethylene ducts positioned between expansion joint segments and deviation saddles.
2. Longitudinal post-tensioning tendons pulled through ducts.
3. Stress tendons by pairs or procedure approved by the engineer to final stress.
4. Release pier or expansion joint segment onto bearing.

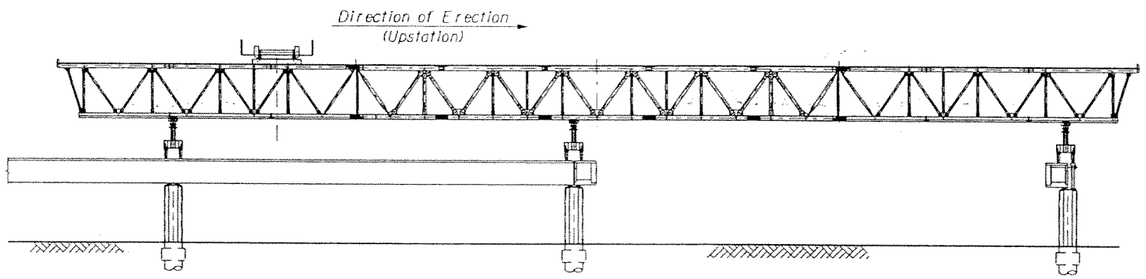

ELEVATION
SEGMENT PLACEMENT

PHASE III - TRUSS ADVANCEMENT

1. Truss support bracket is positioned at next pier.
2. Truss is self-launched forward to the next pier.

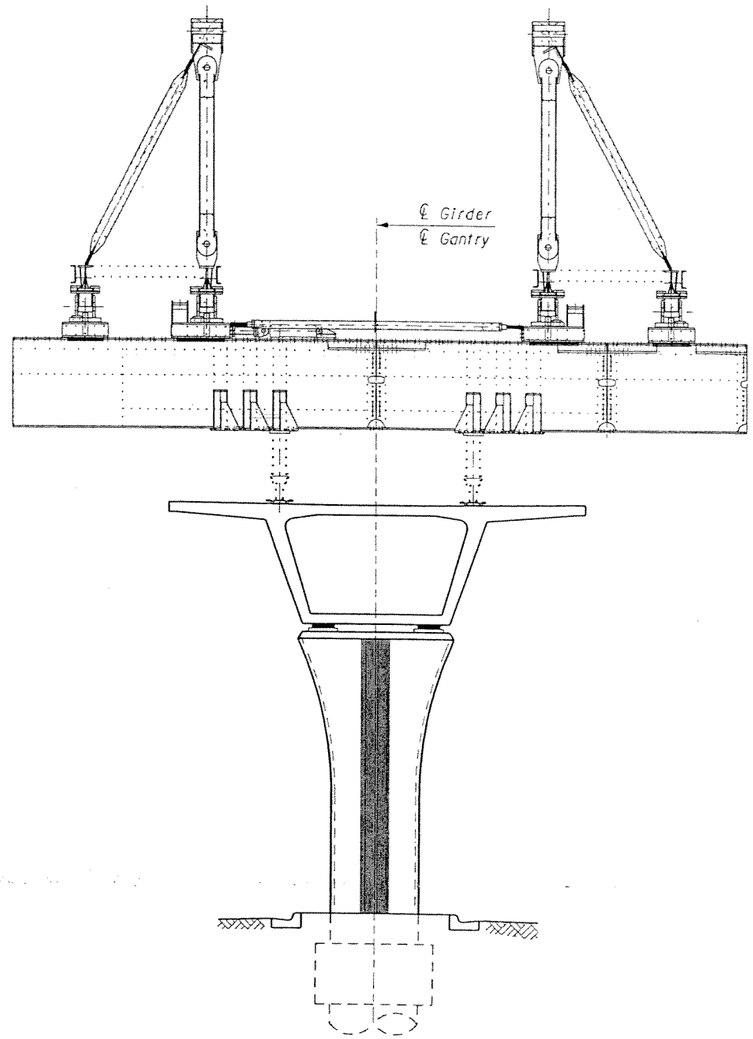

CROSS-SECTION AT DUAL TRACK PIER
(Dual Track Shown, Single Track Similar)

SUBJECT TO CHANGE

GTH	1-Nov-05					
Designed by	Date					
JLS	5-May-06					
Drawn by	Date					
JER	5-May-06					
Checked by	Date					
TWS	5-May-06					
Approved by	Date	No.	Date	By / Chk	App.	Revisions

NORTH CORRIDOR METRORAIL EXTENSION - PRELIMINARY ENGINEERING (100% SUBMITTAL)

STRUCTURES - GUIDEWAY (CONCRETE)

MIAMI-DADE COUNTY

MIAMI-DADE TRANSIT

PARSONS
7600 CORPORATE CENTER DRIVE, SUITE 500
MIAMI, FLORIDA 33126
PHONE: (786) 464-1000 FAX: (786) 845-7119
CERTIFICATE OF AUTHORIZATION NO. 1838

Approved | Date | Approved | Date

ERECTION SCHEMATIC
USING OVERHEAD GANTRY

Scale NTS | Drawing SGC- 181 | Sheet 392

5/9/2006 3:19:40 PM g:\646331_north_corridor\cadd\dgn\new alignment\erection_3.dgn

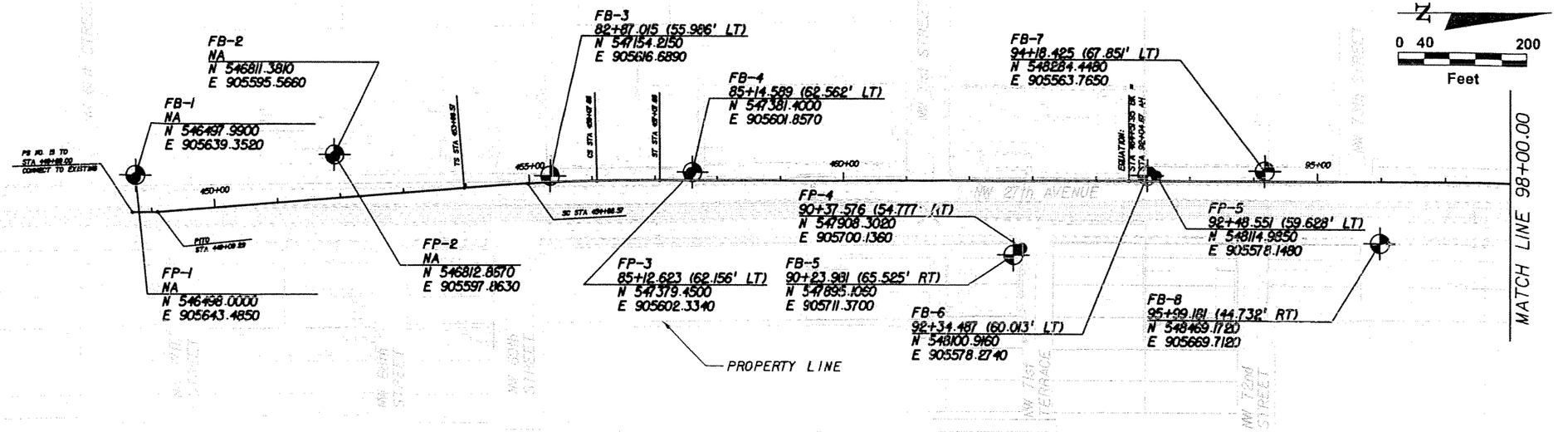

LEGEND:

- SPT BORING
- PERC. TEST
- WATER TABLE
- N — SPT VALUE
- LS — LIMESTONE
- F SAND — FINE SAND
- ASPHALT PAVEMENT
- TOPSOIL
- FILL
- FINE SAND
- SILTY SAND
- LIMESTONE W/FINE SAND
- SAND W/LIMESTONE
- ORGANICS
- SANDSTONE WITH SAND
- SAND WITH SANDSTONE
- SANDY SILT

NOTES:

1. READ THE BORING LOCATION PLAN PROFILES TOGETHER WITH DRAWINGS GE-020 TO GE-066 FOR MORE INFORMATION.
2. BORING LOCATIONS (STATIONS AND OFFSETS) BASED ON 70% PRELIMINARY ENGINEERING ALIGNMENT.

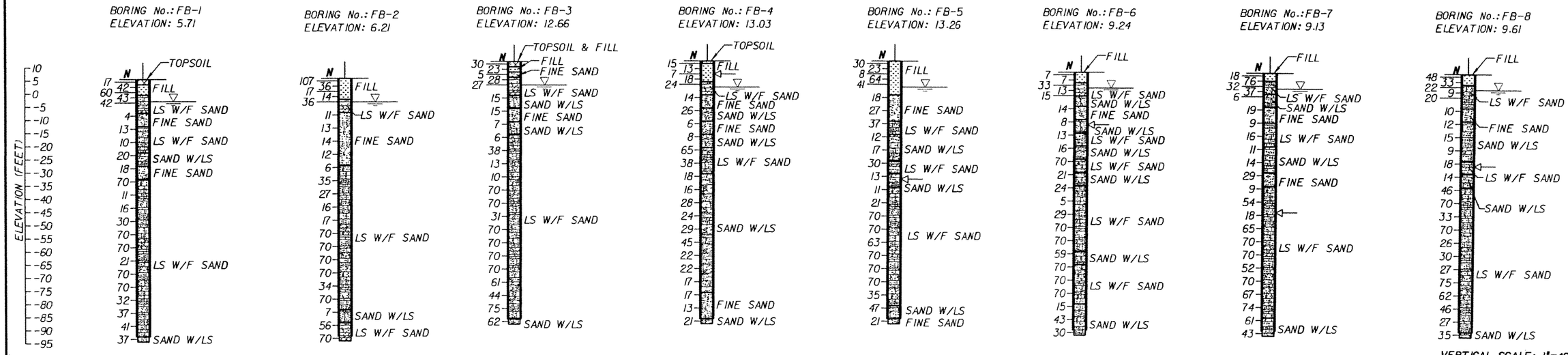

VERTICAL SCALE: 1"=40'

SK	05-06					
Designed by	Date					
SK/EP	05-06					
Drawn by	Date					
AK	05-06					
Checked by	Date					
Approved by	Date	No.	Date	By / Chk	App.	Revisions

NORTH CORRIDOR METRORAIL EXTENSION - PRELIMINARY ENGINEERING (100% SUBMITTAL)

MIAMI-DADE COUNTY — MIAMI-DADE TRANSIT

PARSONS
7600 CORPORATE CENTER DRIVE, SUITE 500
MIAMI, FLORIDA 33126
PHONE: (786) 464-1000 FAX: (786) 845-7119
CERTIFICATE OF AUTHORIZATION NO. 1636
Approved | Date

HP CONSULTANTS INC.
License No. 9509
ARVIND KUMBHOJKAR, PH.D. P.E.
License No. 41067
10220 SW 107 Street
Miami, Fl 33176 Ph:(305)596-1585
Approved | Date

GEOTECHNICAL

BORING LOCATION PLAN

Scale 1" = 200' | Drawing GE-001 | Sheet 393

5/3/2006 8:48:25 AM c:\HP\SHT\RGEOGN01.DGN

NOTE: CURVE AND STATIONING IS FOR NORTHBOUND TRACK. SOUTHBOUND TRACK WILL BE TYPICALLY OFFSET 14 FT AND ADJUSTED FOR CLEARANCE REQUIREMENTS ON CURVES.

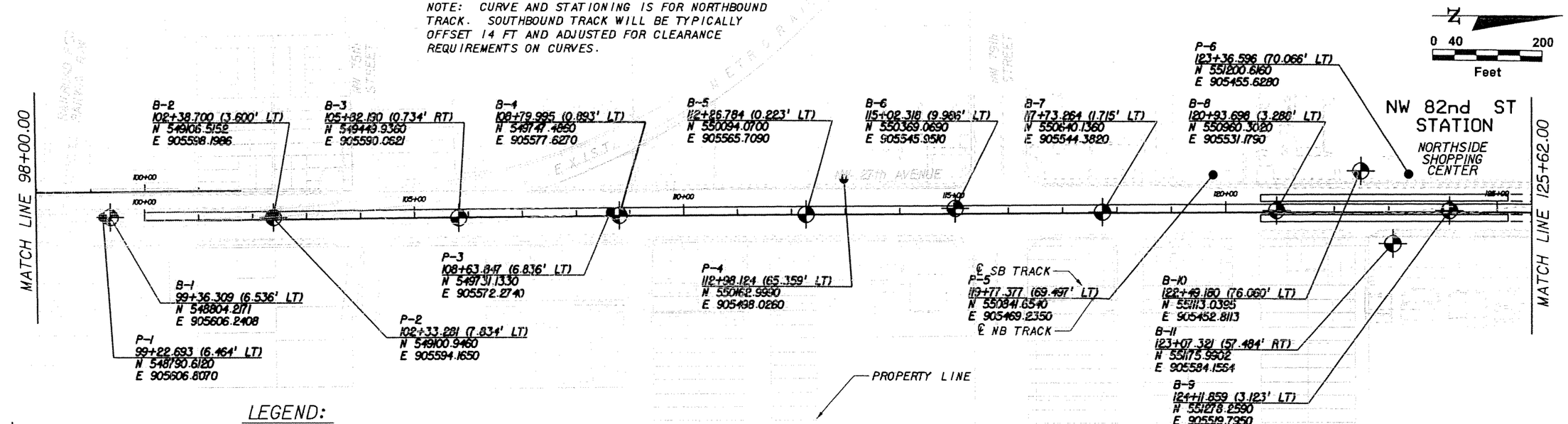

LEGEND:

SPT BORING	ASPHALT PAVEMENT	SILTY SAND	ORGANICS
PERC. TEST	TOPSOIL	LIMESTONE W/FINE SAND	SANDSTONE WITH SAND
WATER TABLE	FILL	SAND W/LIMESTONE	SAND WITH SANDSTONE
N SPT VALUE	FINE SAND		SANDY SILT
LS LIMESTONE			
F SAND FINE SAND			

NOTES:

1. READ THE BORING LOCATION PLAN PROFILES TOGETHER WITH DRAWINGS GE-020 TO GE-066 FOR MORE INFORMATION.
2. BORING LOCATIONS (STATIONS AND OFFSETS) BASED ON 70% PRELIMINARY ENGINEERING ALIGNMENT.

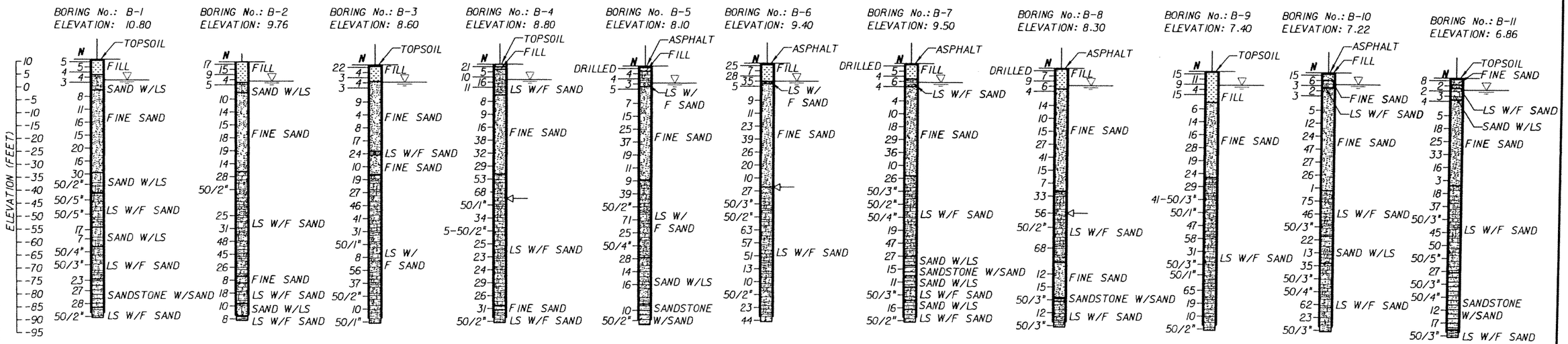

VERTICAL SCALE: 1"=40'

SK Designed by	05-06 Date						
SK/EP Drawn by	05-06 Date						
AK Checked by	05-06 Date						
Approved by	Date	No.	Date	By / Chk	App.	Revisions	

NORTH CORRIDOR METRORAIL EXTENSION - PRELIMINARY ENGINEERING (100% SUBMITTAL)

GEOTECHNICAL

MIAMI-DADE COUNTY

MIAMI-DADE TRANSIT

PARSONS
7600 CORPORATE CENTER DRIVE, SUITE 500
MIAMI, FLORIDA 33126
PHONE: (786) 464-1000 FAX: (786) 845-7119
CERTIFICATE OF AUTHORIZATION NO. 1838

Approved | Date

HP CONSULTANTS INC.
License No. 9509
ARVIND KUMBHOJKAR, PH.D, P.E.
License No. 41067
10220 SW 107 Street
Miami, Fl 33176 Ph:(305)596-1585

Approved | Date

BORING LOCATION PLAN

Scale 1" = 200' | Drawing GE-002 | Sheet 39 of

5/3/2006 8:45:50 AM c:\HP\SHT\RGEOGN02.DGN

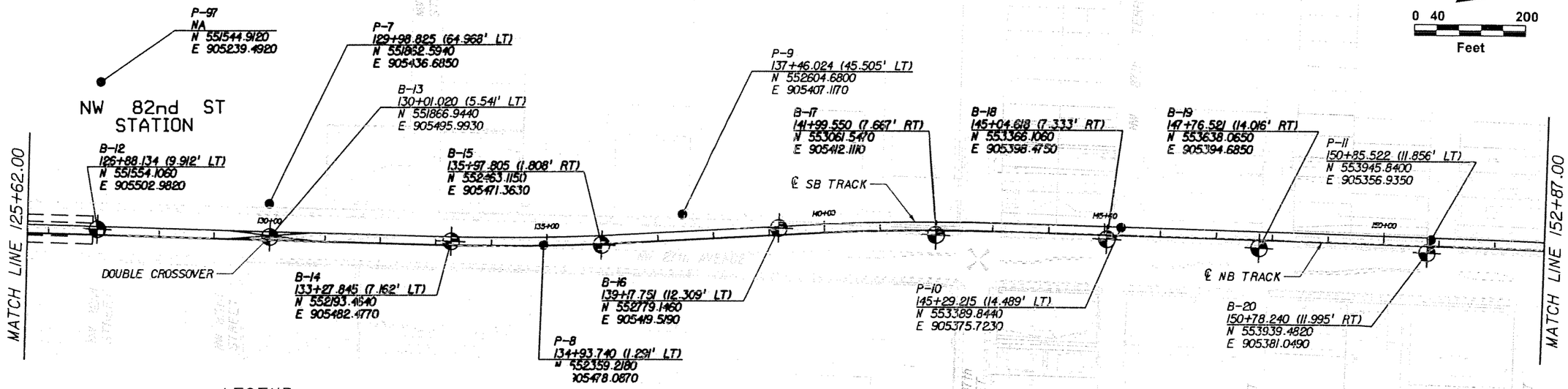

LEGEND:

- SPT BORING
- PERC. TEST
- WATER TABLE
- N — SPT VALUE
- LS — LIMESTONE
- F SAND — FINE SAND
- ASPHALT PAVEMENT
- TOPSOIL
- FILL
- FINE SAND
- SILTY SAND
- LIMESTONE W/FINE SAND
- SAND W/LIMESTONE
- ORGANICS
- SANDSTONE WITH SAND
- SAND WITH SANDSTONE
- SANDY SILT

NOTES:

1. READ THE BORING LOCATION PLAN PROFILES TOGETHER WITH DRAWINGS GE-020 TO GE-066 FOR MORE INFORMATION.
2. BORING LOCATIONS (STATIONS AND OFFSETS) BASED ON 70% PRELIMINARY ENGINEERING ALIGNMENT.

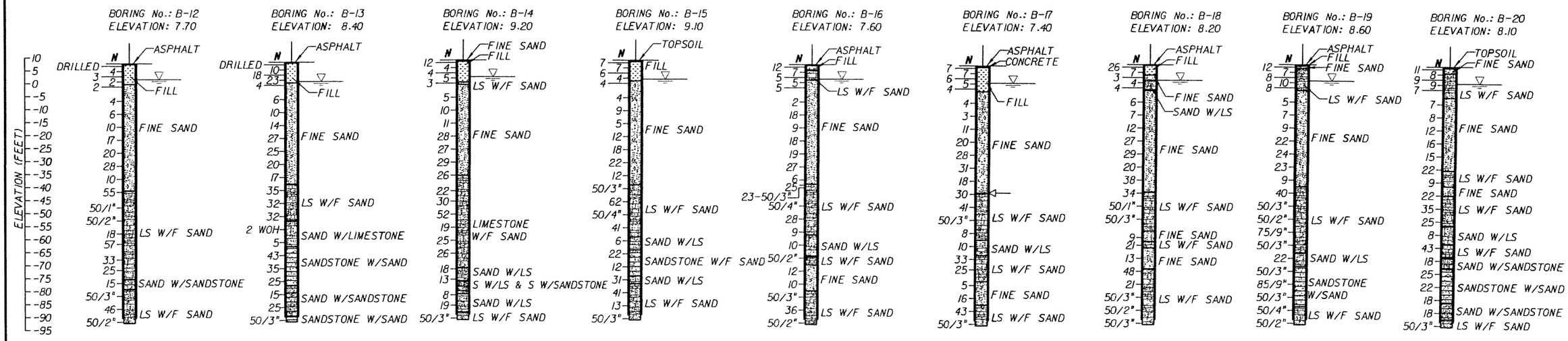

VERTICAL SCALE: 1"=40'

SK	05-06					
Designed by	Date					
SK/EP	05-06					
Drawn by	Date					
AK	05-06					
Checked by	Date					
Approved by	Date	No.	Date	By / Chk	App.	Revisions

NORTH CORRIDOR METRORAIL EXTENSION - PRELIMINARY ENGINEERING (100% SUBMITTAL)

MIAMI-DADE COUNTY — MIAMI-DADE TRANSIT

PARSONS
7600 CORPORATE CENTER DRIVE, SUITE 500
MIAMI, FLORIDA 33126
PHONE: (786) 464-1000 FAX: (786) 845-7119
CERTIFICATE OF AUTHORIZATION NO. 1635
Approved | Date

HP CONSULTANTS INC.
License No. 9509
ARVIND KUMBHOJKAR, PH.D. P.E.
License No. 41067
10220 SW 107 Street
Miami, Fl 33176 Ph:(305)596-1585
Approved | Date

GEOTECHNICAL

BORING LOCATION PLAN

Scale: 1" = 200' | Drawing: GE-003 | Sheet: 235

5/3/2006 9:17:28 AM c:\HP\SHT\RGEOGN03.DGN

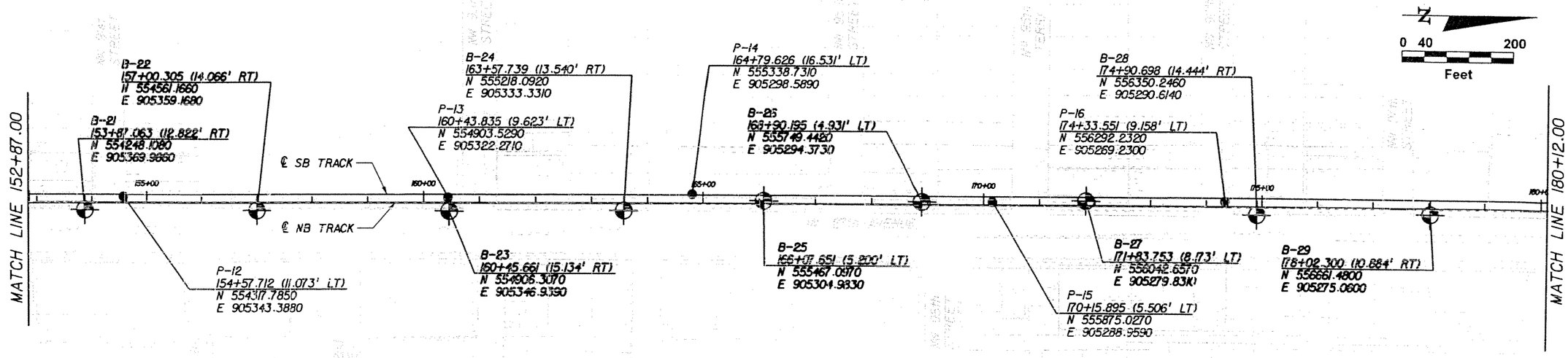

LEGEND:

- SPT BORING
- PERC. TEST
- WATER TABLE
- N — SPT VALUE
- LS — LIMESTONE
- F SAND — FINE SAND
- ASPHALT PAVEMENT
- TOPSOIL
- FILL
- FINE SAND
- SILTY SAND
- LIMESTONE W/FINE SAND
- SAND W/LIMESTONE
- ORGANICS
- SANDSTONE WITH SAND
- SAND WITH SANDSTONE
- SANDY SILT

NOTES:

1. READ THE BORING LOCATION PLAN PROFILES TOGETHER WITH DRAWINGS GE-020 TO GE-066 FOR MORE INFORMATION.
2. BORING LOCATIONS (STATIONS AND OFFSETS) BASED ON 70% PRELIMINARY ENGINEERING ALIGNMENT.

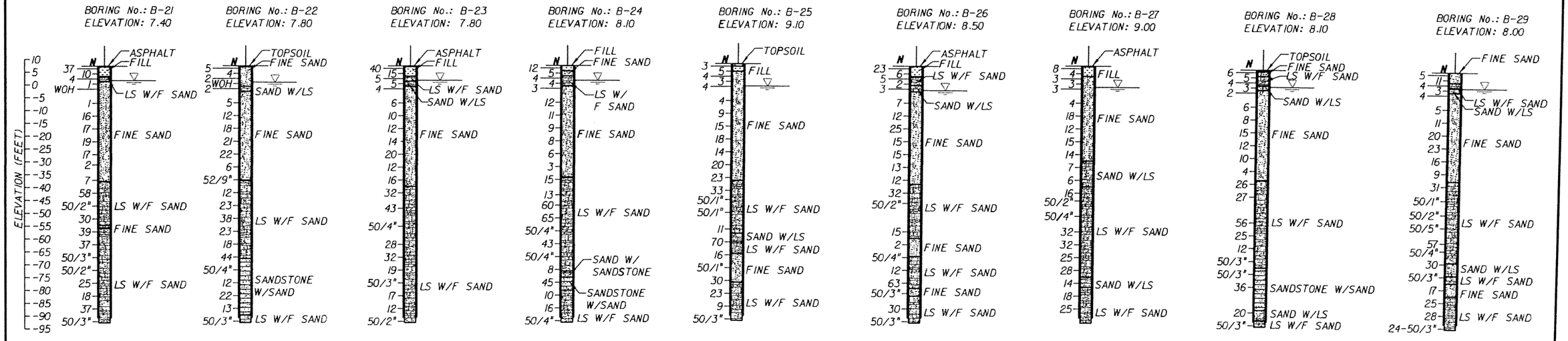

VERTICAL SCALE: 1"=40'

SK	05-06					
Designed by	Date					
SK/EP	05-06					
Drawn by	Date					
AK	05-06					
Checked by	Date					
Approved by	Date	No.	Date	By / Chk	App.	Revisions

NORTH CORRIDOR METRORAIL EXTENSION - PRELIMINARY ENGINEERING (100% SUBMITTAL)

MIAMI-DADE COUNTY — MIAMI-DADE TRANSIT

PARSONS
7600 CORPORATE CENTER DRIVE, SUITE 500
MIAMI, FLORIDA 33126
PHONE: (786) 464-1000 FAX: (786) 845-7119
CERTIFICATE OF AUTHORIZATION NO. 1838

Approved | Date

HP CONSULTANTS INC.
License No. 9509
ARVIND KUMBHOJKAR, PH.D, P.E.
License No. 41067
10220 SW 107 Street
Miami, Fl 33176 Ph:(305)596-1585

Approved | Date

GEOTECHNICAL

BORING LOCATION PLAN

Scale: 1" = 200' | Drawing: GE-004 | Sheet: 396

5/3/2006 9:57:12 AM c:\HP\SHT\RGEOGN04.DGN

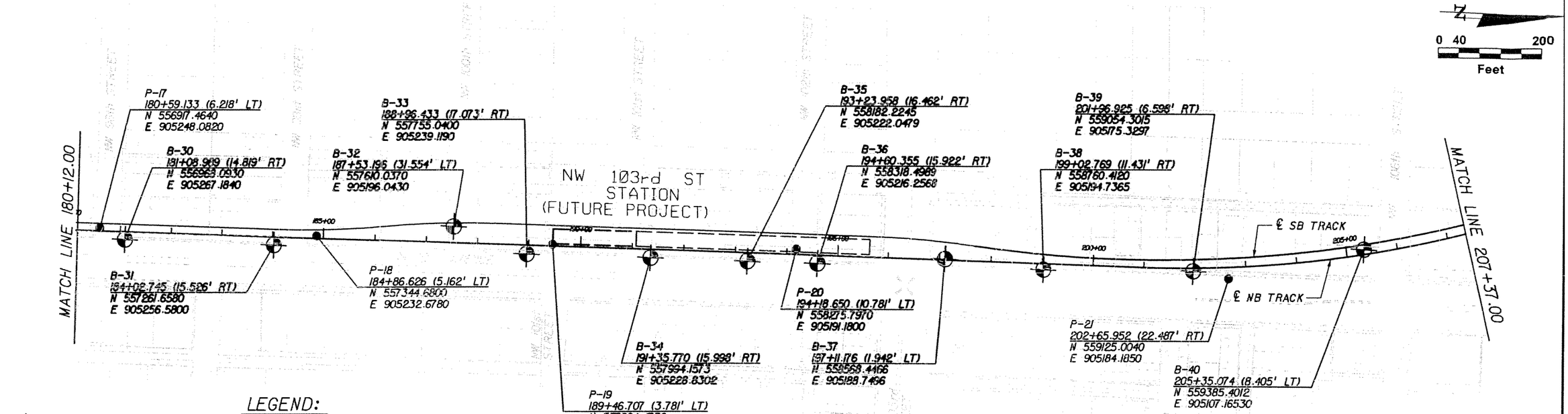

LEGEND:

- SPT BORING
- PERC. TEST
- WATER TABLE
- N — SPT VALUE
- LS — LIMESTONE
- F SAND — FINE SAND
- ASPHALT PAVEMENT
- TOPSOIL
- FILL
- FINE SAND
- SILTY SAND
- LIMESTONE W/FINE SAND
- SAND W/LIMESTONE
- ORGANICS
- SANDSTONE WITH SAND
- SAND WITH SANDSTONE
- SANDY SILT

NOTES:

1. READ THE BORING LOCATION PLAN PROFILES TOGETHER WITH DRAWINGS GE-020 TO GE-066 FOR MORE INFORMATION.
2. BORING LOCATIONS (STATIONS AND OFFSETS) BASED ON 70% PRELIMINARY ENGINEERING ALIGNMENT.

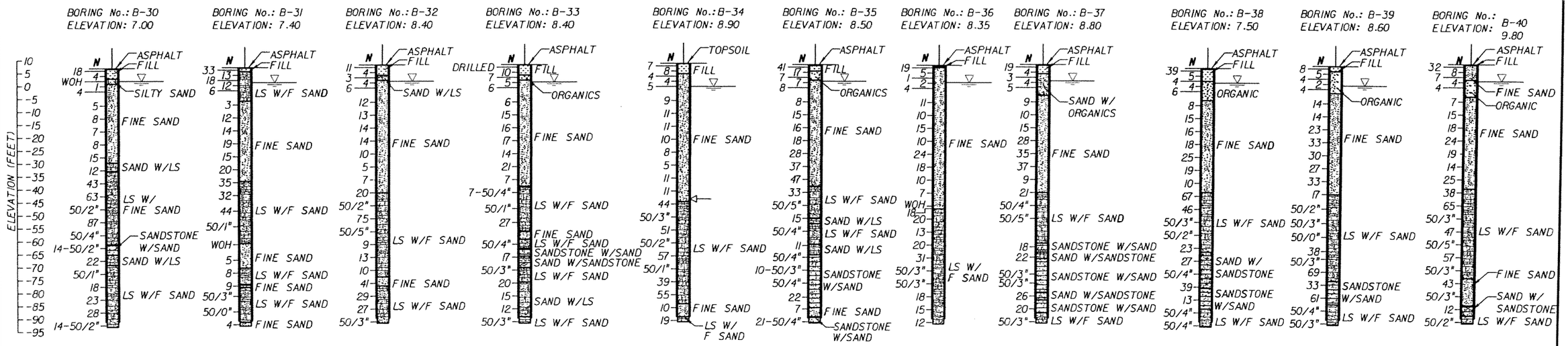

VERTICAL SCALE: 1"=40'

SK	05-06					
Designed by	Date					
SK/EP	05-06					
Drawn by	Date					
AK	05-06					
Checked by	Date					
Approved by	Date	No.	Date	By Chk	App.	Revisions

NORTH CORRIDOR METRORAIL EXTENSION - PRELIMINARY ENGINEERING (100% SUBMITTAL)

MIAMI-DADE COUNTY — MIAMI-DADE TRANSIT

PARSONS
7600 CORPORATE CENTER DRIVE, SUITE 500
MIAMI, FLORIDA 33126
PHONE: (786) 464-1000 FAX: (786) 845-7119
CERTIFICATE OF AUTHORIZATION NO. 1838

Approved | Date

HP CONSULTANTS INC.
License No. 9509
ARVIND KUMBHOJKAR, PH.D. P.E.
License No. 41067
10220 SW 107 Street
Miami, Fl 33176 Ph:(305)596-1585

Approved | Date

GEOTECHNICAL

BORING LOCATION PLAN

Scale 1" = 200' | Drawing GE-005 | Sheet 39

5/3/2006 11:05:20 AM c:\HP\SHT\RGEOGN05.DGN

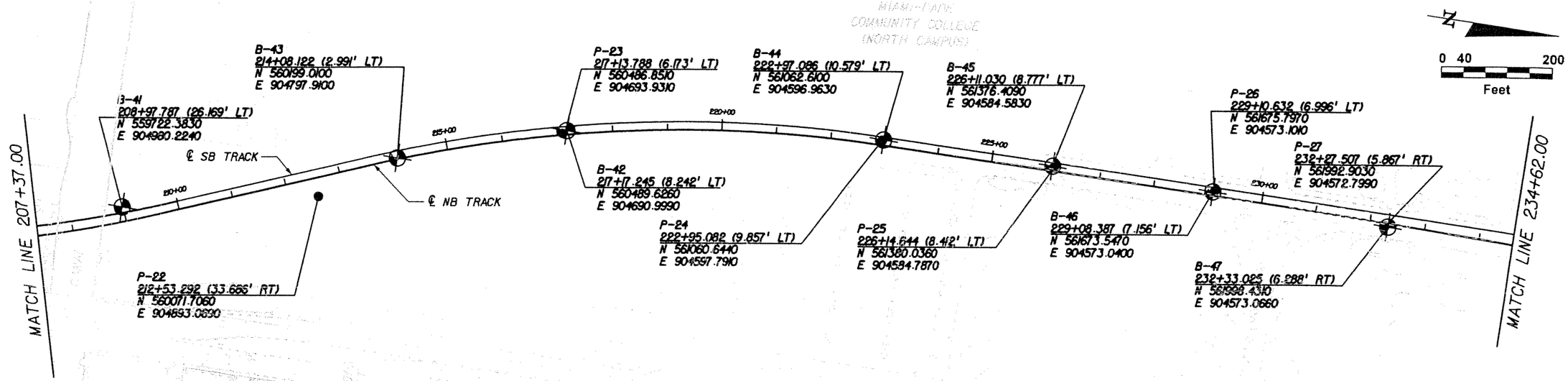

LEGEND:

- SPT BORING
- PERC. TEST
- WATER TABLE
- N — SPT VALUE
- LS — LIMESTONE
- F SAND — FINE SAND
- ASPHALT PAVEMENT
- TOPSOIL
- FILL
- FINE SAND
- SILTY SAND
- LIMESTONE W/FINE SAND
- SAND W/LIMESTONE
- ORGANICS
- SANDSTONE WITH SAND
- SAND WITH SANDSTONE
- SANDY SILT

NOTES:

1. READ THE BORING LOCATION PLAN PROFILES TOGETHER WITH DRAWINGS GE-020 TO GE-066 FOR MORE INFORMATION.
2. BORING LOCATIONS (STATIONS AND OFFSETS) BASED ON 70% PRELIMINARY ENGINEERING ALIGNMENT.

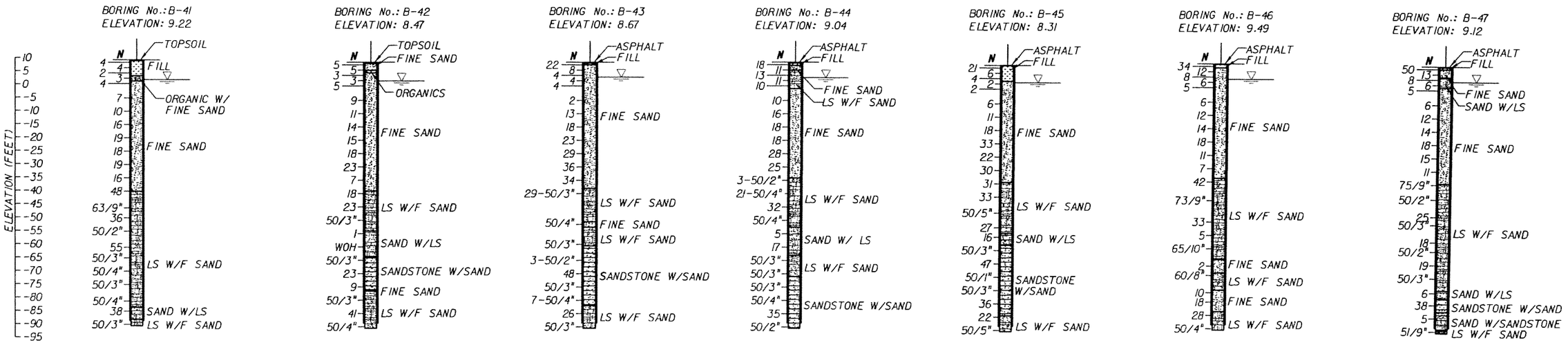

VERTICAL SCALE: 1"=40'

SK	05-06							
Designed by	Date							
SK/EP	05-06							
Drawn by	Date							
AK	05-06							
Checked by	Date							
Approved by	Date	No.	Date	By / Chk	App.	Revisions		

NORTH CORRIDOR METRORAIL EXTENSION - PRELIMINARY ENGINEERING (100% SUBMITTAL)

MIAMI-DADE COUNTY — MIAMI-DADE TRANSIT

PARSONS
7600 CORPORATE CENTER DRIVE, SUITE 500
MIAMI, FLORIDA 33126
PHONE: (786) 464-1000 FAX: (786) 845-7119
CERTIFICATE OF AUTHORIZATION NO. 1836

Approved | Date

HP CONSULTANTS INC.
License No. 9509
ARVIND KUMBHOJKAR, PH.D. P.E.
License No. 41067
10220 SW 107 Street
Miami, Fl 33176 Ph:(305)596-1585

Approved | Date

GEOTECHNICAL

BORING LOCATION PLAN

Scale: 1" = 200' | Drawing: GE-006 | Sheet: 398

5/3/2006 12:14:28 PM c:\HP\SHT\RGEOGN06.DGN

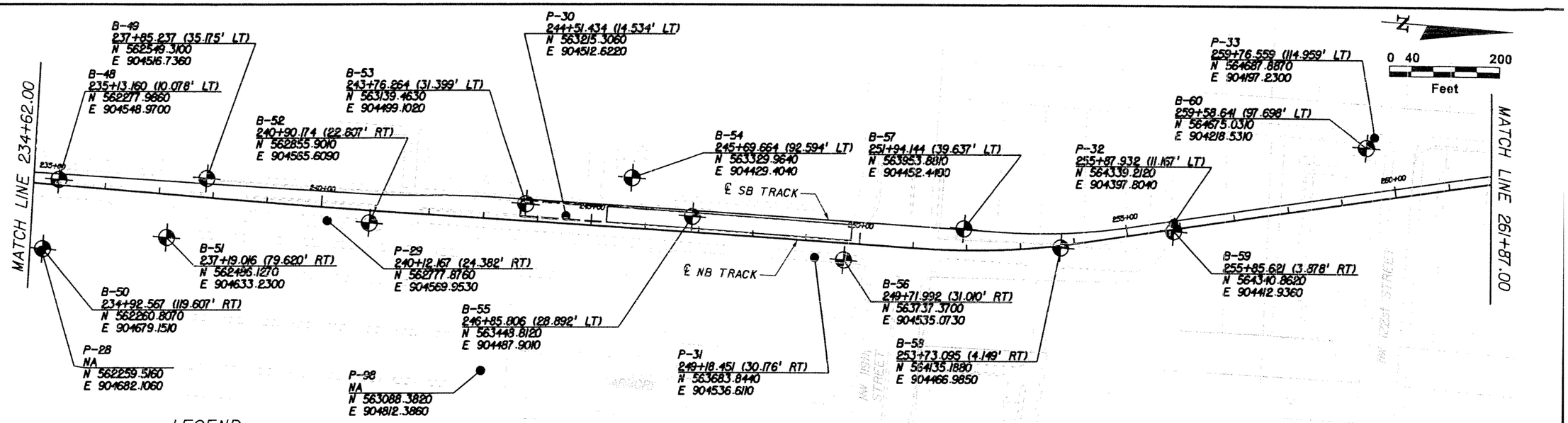

LEGEND:

- SPT BORING
- PERC. TEST
- WATER TABLE
- N — SPT VALUE
- LS — LIMESTONE
- F SAND — FINE SAND
- ASPHALT PAVEMENT
- TOPSOIL
- FILL
- FINE SAND
- SILTY SAND
- LIMESTONE W/FINE SAND
- SAND W/LIMESTONE
- ORGANICS
- SANDSTONE WITH SAND
- SAND WITH SANDSTONE
- SANDY SILT

NOTES:

1. READ THE BORING LOCATION PLAN PROFILES TOGETHER WITH DRAWINGS GE-020 TO GE-066 FOR MORE INFORMATION.
2. BORING LOCATIONS (STATIONS AND OFFSETS) BASED ON 70% PRELIMINARY ENGINEERING ALIGNMENT.

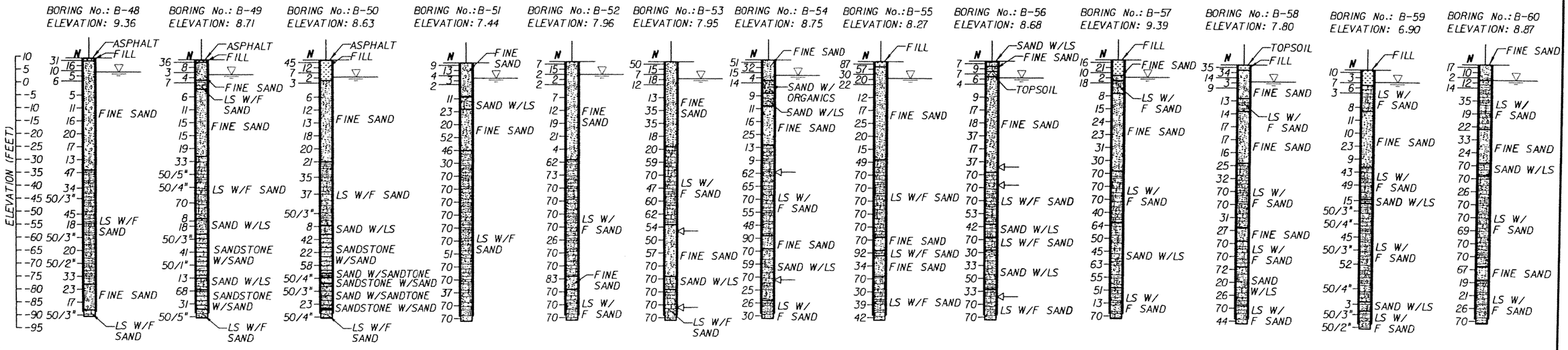

VERTICAL SCALE: 1"=40'

SK	05-05					
Designed by	Date					
SK/EP	05-06					
Drawn by	Date					
AK	05-06					
Checked by	Date					
Approved by	Date	No.	Date	By / Chk	App.	Revisions

NORTH CORRIDOR METRORAIL EXTENSION - PRELIMINARY ENGINEERING (100% SUBMITTAL)

MIAMI-DADE COUNTY

MIAMI-DADE TRANSIT

PARSONS
7600 CORPORATE CENTER DRIVE, SUITE 500
MIAMI, FLORIDA 33126
PHONE: (786) 454-1000 FAX: (786) 845-7119
CERTIFICATE OF AUTHORIZATION NO. 1838
Approved Date

HP CONSULTANTS INC.
License No. 9509
ARVIND KUMBHOJKAR, PH.D, P.E.
License No. 41067
10220 SW 107 Street
Miami, Fl 33176 Ph:(305)596-1585
Approved Date

GEOTECHNICAL

BORING LOCATION PLAN

Scale 1" = 200' | Drawing GE-007 | Sheet 399

5/3/2006 1:30:41 PM c:\HP\SHT\RGEOGN07.DGN

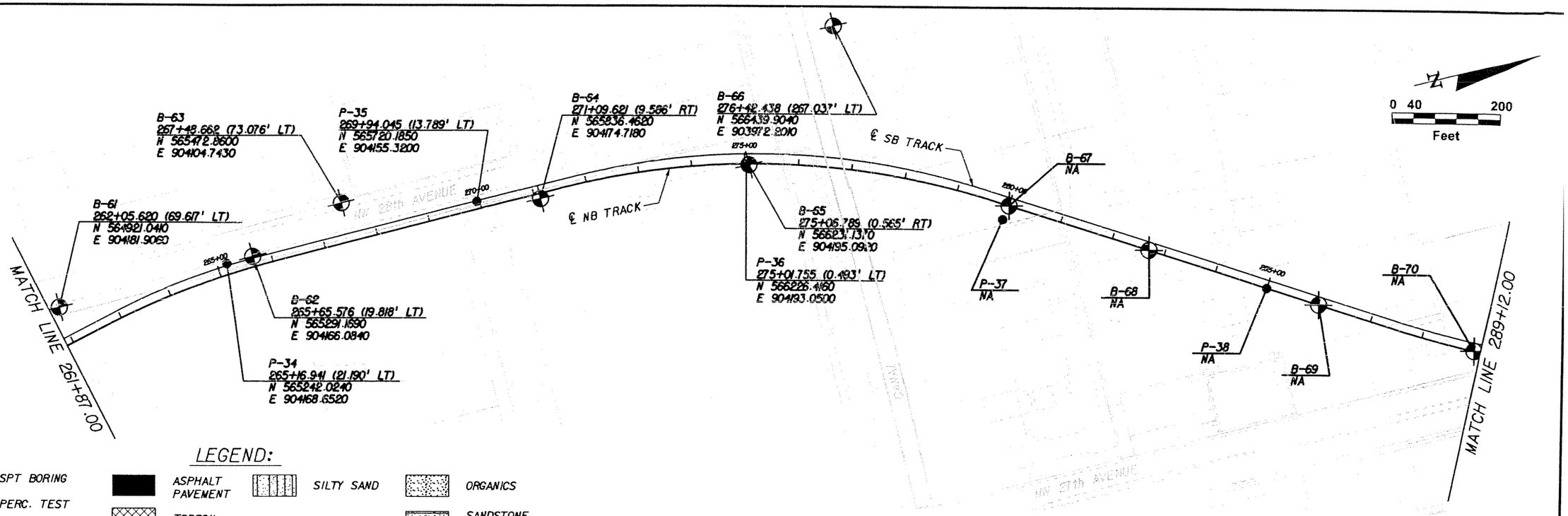

LEGEND:

- SPT BORING
- PERC. TEST
- WATER TABLE
- N — SPT VALUE
- LS — LIMESTONE
- F SAND — FINE SAND
- ASPHALT PAVEMENT
- TOPSOIL
- FILL
- FINE SAND
- SILTY SAND
- LIMESTONE W/FINE SAND
- SAND W/LIMESTONE
- ORGANICS
- SANDSTONE WITH SAND
- SAND WITH SANDSTONE
- SANDY SILT

NOTES:

1. READ THE BORING LOCATION PLAN PROFILES TOGETHER WITH DRAWINGS GE-020 TO GE-066 FOR MORE INFORMATION.
2. BORING LOCATIONS (STATIONS AND OFFSETS) BASED ON 70% PRELIMINARY ENGINEERING ALIGNMENT.

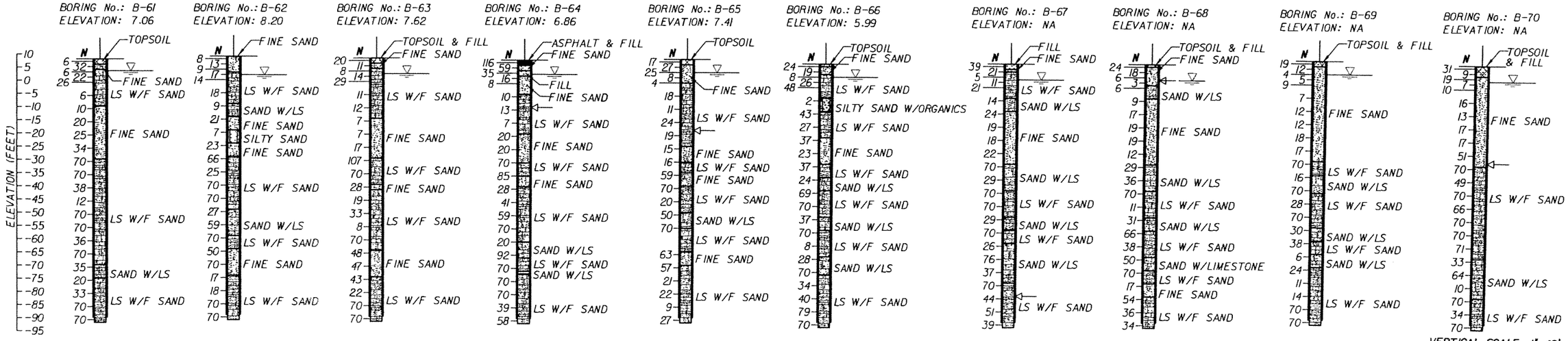

VERTICAL SCALE: 1"=40'

SK	05-06						
Designed by	Date						
SK/EP	05-06						
Drawn by	Date						
AK	05-06						
Checked by	Date						
Approved by	Date	No.	Date	By / Chk	App.	Revisions	

NORTH CORRIDOR METRORAIL EXTENSION - PRELIMINARY ENGINEERING (100% SUBMITTAL)

MIAMI-DADE COUNTY — MIAMI-DADE TRANSIT

PARSONS
7600 CORPORATE CENTER DRIVE, SUITE 500
MIAMI, FLORIDA 33126
PHONE: (786) 464-1000 FAX: (786) 845-7119
CERTIFICATE OF AUTHORIZATION NO. 1838

Approved — Date

HP CONSULTANTS INC.
License No. 9509
ARVIND KUMBHOJKAR, PH.D, P.E.
License No. 41067
10220 SW 107 Street
Miami, Fl 33176 Ph:(305)596-1585

Approved — Date

GEOTECHNICAL

BORING LOCATION PLAN

Scale: 1" = 200' | Drawing: GE-008 | Sheet: 400

5/5/2006 9:31:27 AM c:\HP\SHT\RGEOGN08.DGN

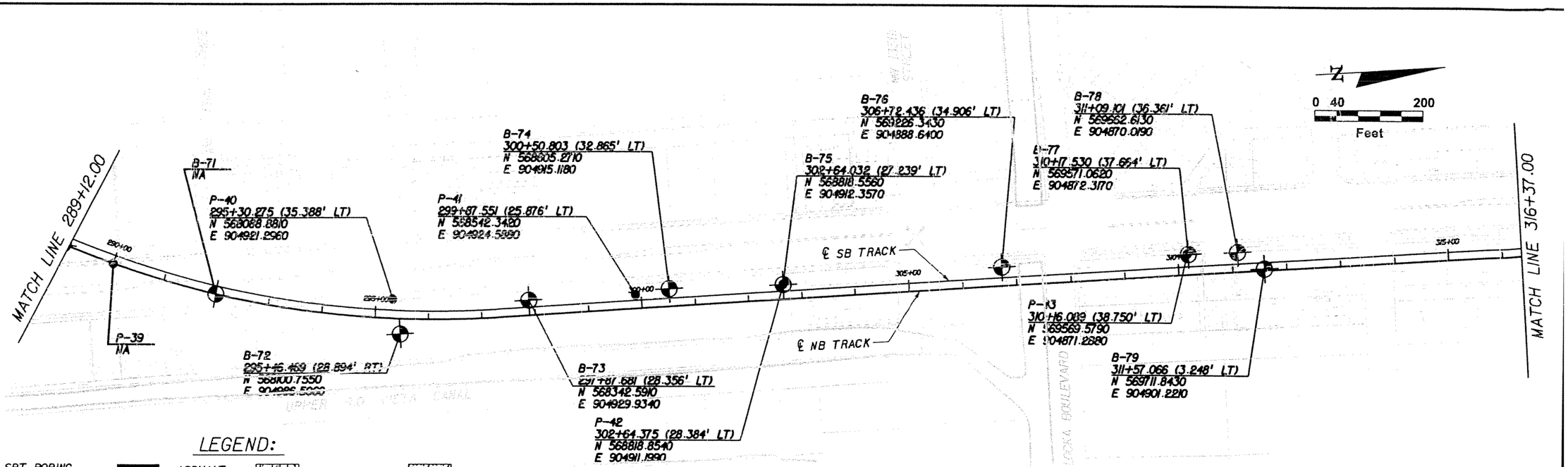

LEGEND:

- SPT BORING
- PERC. TEST
- WATER TABLE
- N — SPT VALUE
- LS — LIMESTONE
- F SAND — FINE SAND
- ASPHALT PAVEMENT
- TOPSOIL
- FILL
- FINE SAND
- SILTY SAND
- LIMESTONE W/FINE SAND
- SAND W/LIMESTONE
- ORGANICS
- SANDSTONE WITH SAND
- SAND WITH SANDSTONE
- SANDY SILT

NOTES:

1. READ THE BORING LOCATION PLAN PROFILES TOGETHER WITH DRAWINGS GE-020 TO GE-066 FOR MORE INFORMATION.
2. BORING LOCATIONS (STATIONS AND OFFSETS) BASED ON 70% PRELIMINARY ENGINEERING ALIGNMENT.

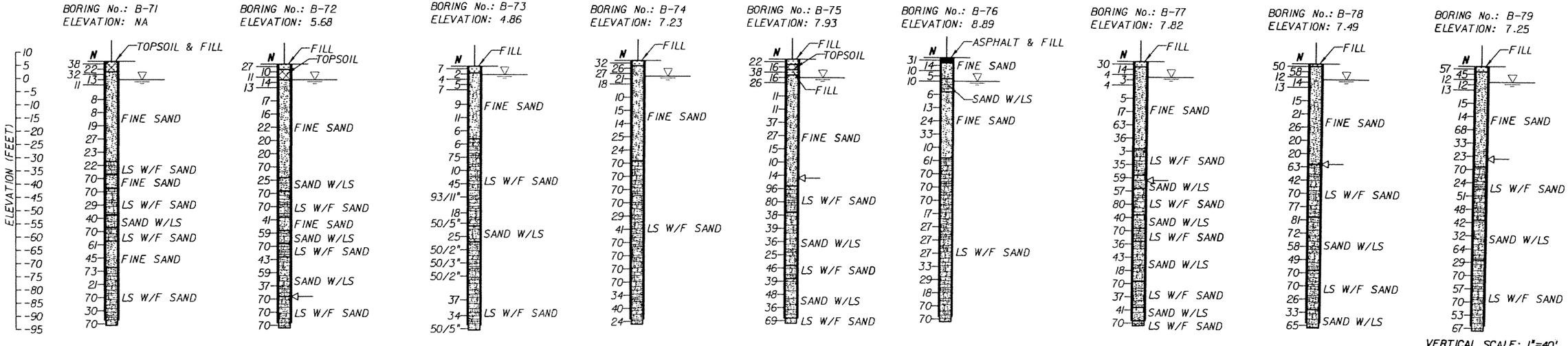

VERTICAL SCALE: 1"=40'

SK	05-06					
Designed by	Date					
SK/EP	05-06					
Drawn by	Date					
AK	05-06					
Checked by	Date					
Approved by	Date	No.	Date	By / Chk	App.	Revisions

NORTH CORRIDOR METRORAIL EXTENSION - PRELIMINARY ENGINEERING (100% SUBMITTAL)

MIAMI-DADE COUNTY — MIAMI-DADE TRANSIT

PARSONS
7600 CORPORATE CENTER DRIVE, SUITE 500
MIAMI, FLORIDA 33126
PHONE: (786) 464-1000 FAX: (786) 845-7119
CERTIFICATE OF AUTHORIZATION NO. 1836
Approved / Date

HP CONSULTANTS INC.
License No. 9509
ARVIND KUMBHOJKAR, PH.D. P.E.
License No. 41067
10220 SW 107 Street
Miami, Fl 33176 Ph:(305)596-1585
Approved / Date

GEOTECHNICAL

BORING LOCATION PLAN

Scale: 1" = 200' | Drawing: GE-009 | Sheet: 401

5/3/2006 2:45:52 PM c:\HP\SHT\RGEOGN09.DGN

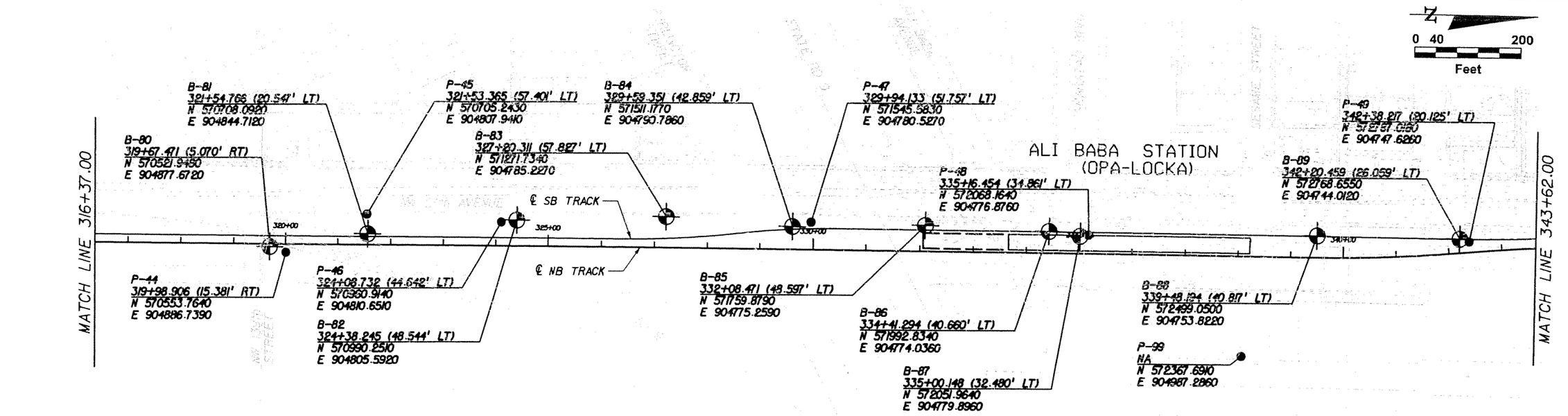

PARK & RIDE

LEGEND:

- SPT BORING
- PERC. TEST
- WATER TABLE
- N SPT VALUE
- LS LIMESTONE
- F SAND FINE SAND
- ASPHALT PAVEMENT
- TOPSOIL
- FILL
- FINE SAND
- SILTY SAND
- LIMESTONE W/FINE SAND
- SAND W/LIMESTONE
- ORGANICS
- SANDSTONE WITH SAND
- SAND WITH SANDSTONE
- SANDY SILT

NOTES:

1. READ THE BORING LOCATION PLAN PROFILES TOGETHER WITH DRAWINGS GE-020 TO GE-066 FOR MORE INFORMATION.
2. BORING LOCATIONS (STATIONS AND OFFSETS) BASED ON 70% PRELIMINARY ENGINEERING ALIGNMENT.

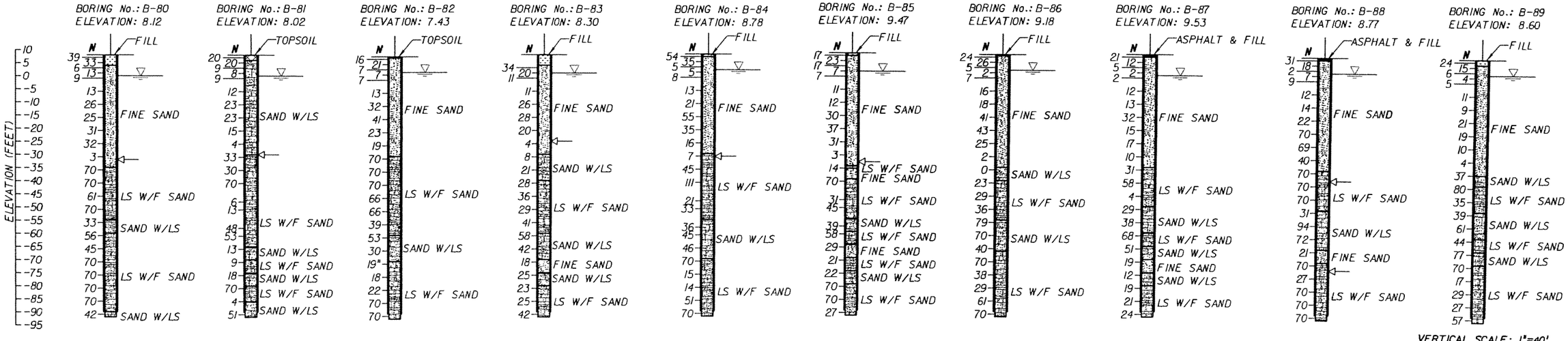

VERTICAL SCALE: 1"=40'

SK	05-06						
Designed by	Date						
SK/EP	05-06						
Drawn by	Date						
AK	05-06						
Checked by	Date						
Approved by	Date	No.	Date	By / Chk	App.	Revisions	

NORTH CORRIDOR METRORAIL EXTENSION - PRELIMINARY ENGINEERING (100% SUBMITTAL)

MIAMI-DADE COUNTY

MIAMI-DADE TRANSIT

PARSONS
7600 CORPORATE CENTER DRIVE, SUITE 500
MIAMI, FLORIDA 33126
PHONE: (786) 464-1000 FAX: (786) 845-7119
CERTIFICATE OF AUTHORIZATION NO. 1838

Approved | Date

HP CONSULTANTS INC.
License No. 9509
ARVIND KUMBHOJKAR, PH.D, P.E.
License No. 41067
10220 SW 107 Street
Miami, Fl 33176 Ph:(305)596-1585

Approved | Date

GEOTECHNICAL

BORING LOCATION PLAN

Scale 1" = 200' | Drawing GE-010 | Sheet 402

5/3/2006 3:22:20 PM c:\HP\SHT\RGEOGN10.DGN

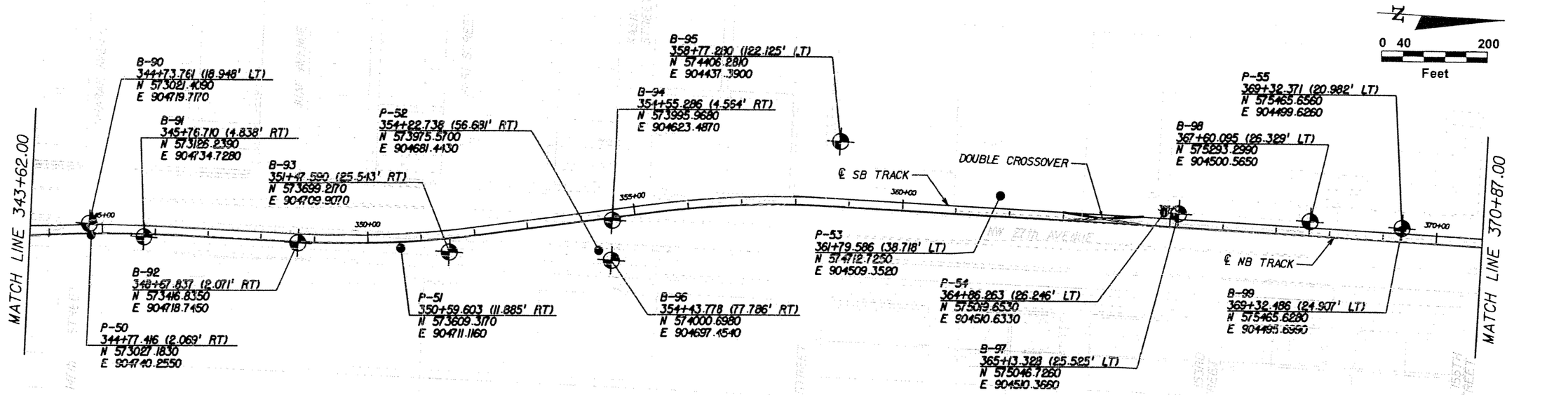

LEGEND:

- SPT BORING
- PERC. TEST
- WATER TABLE
- N — SPT VALUE
- LS — LIMESTONE
- F SAND — FINE SAND
- ASPHALT PAVEMENT
- TOPSOIL
- FILL
- FINE SAND
- SILTY SAND
- LIMESTONE W/FINE SAND
- SAND W/LIMESTONE
- ORGANICS
- SANDSTONE WITH SAND
- SAND WITH SANDSTONE
- SANDY SILT

NOTES:

1. READ THE BORING LOCATION PLAN PROFILES TOGETHER WITH DRAWINGS GE-020 TO GE-066 FOR MORE INFORMATION.
2. BORING LOCATIONS (STATIONS AND OFFSETS) BASED ON 70% PRELIMINARY ENGINEERING ALIGNMENT.

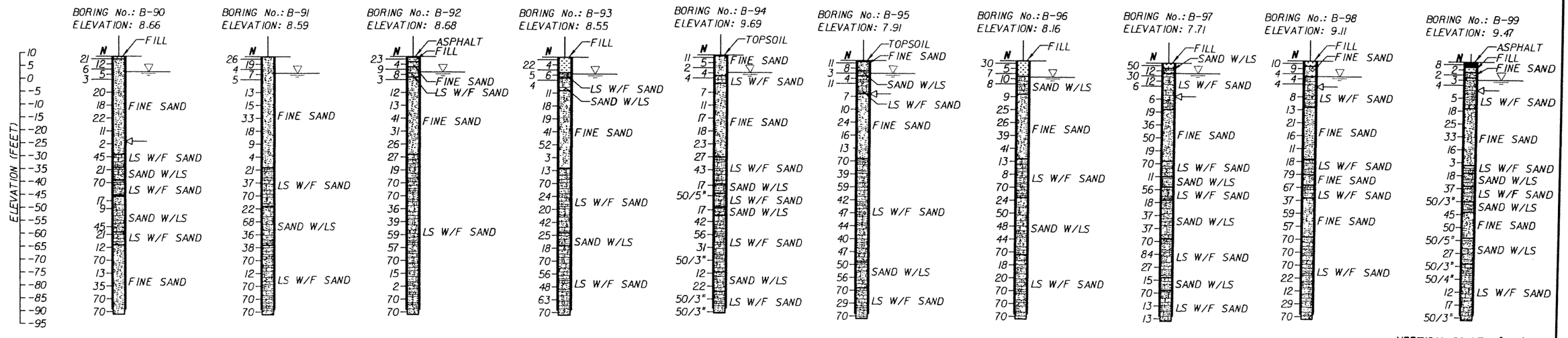

VERTICAL SCALE: 1"=40'

SK	05-06						
Designed by	Date						
SK/EP	05-06						
Drawn by	Date						
AK	05-06						
Checked by	Date						
Approved by	Date	No.	Date	By / Chk	App.	Revisions	

NORTH CORRIDOR METRORAIL EXTENSION - PRELIMINARY ENGINEERING (100% SUBMITTAL)

MIAMI-DADE COUNTY

MIAMI-DADE TRANSIT

PARSONS
7600 CORPORATE CENTER DRIVE, SUITE 500
MIAMI, FLORIDA 33126
PHONE: (786) 464-1000 FAX: (786) 845-7119
CERTIFICATE OF AUTHORIZATION NO. 1838

Approved | Date

HP CONSULTANTS INC.
License No. 9509
ARVIND KUMBHOJKAR, PH.D. P.E.
License No. 41067
10220 SW 107 Street
Miami, FL 33176 Ph:(305)596-1585

Approved | Date

GEOTECHNICAL

BORING LOCATION PLAN

Scale	Drawing	Sheet
1" = 200'	GE-011	403

5/3/2006 4:08:01 PM c:\HP\SHT\RGEOGN11.DGN

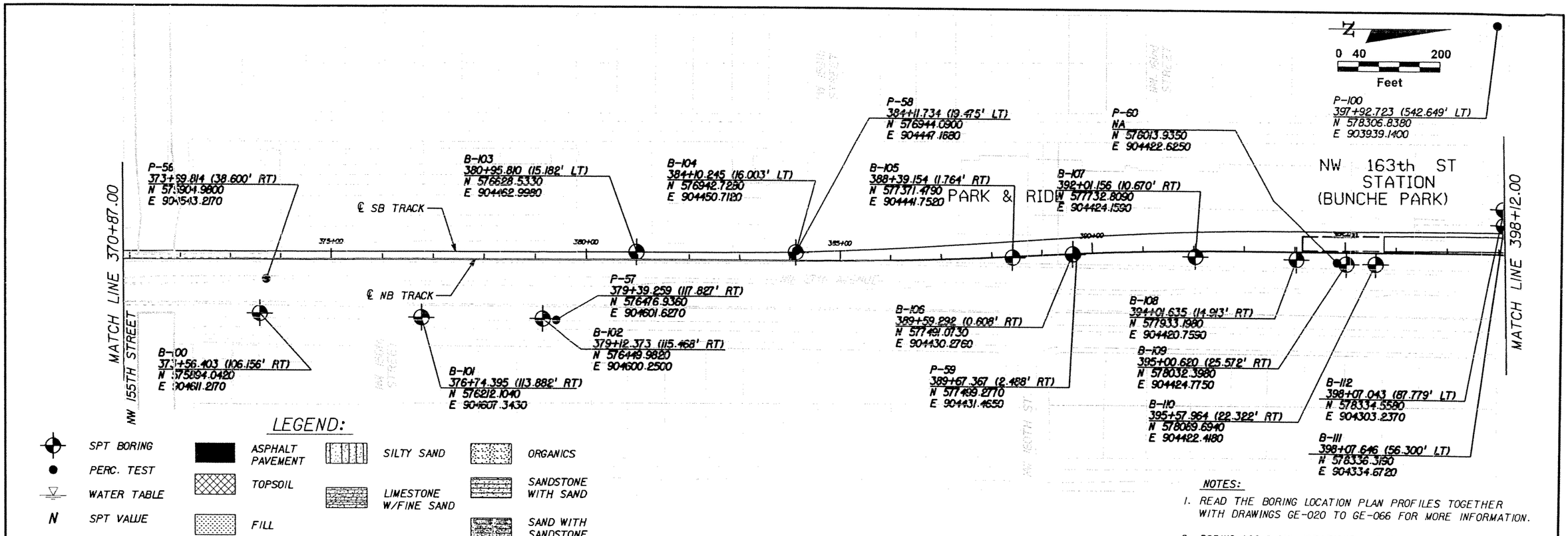

LEGEND:

SPT BORING	ASPHALT PAVEMENT	SILTY SAND	ORGANICS		
PERC. TEST	TOPSOIL	LIMESTONE W/FINE SAND	SANDSTONE WITH SAND		
WATER TABLE	FILL		SAND WITH SANDSTONE		
N SPT VALUE		SAND W/LIMESTONE	SANDY SILT		
LS LIMESTONE					
F SAND FINE SAND					

1. READ THE BORING LOCATION PLAN PROFILES TOGETHER WITH DRAWINGS GE-020 TO GE-066 FOR MORE INFORMATION.
2. BORING LOCATIONS (STATIONS AND OFFSETS) BASED ON 70% PRELIMINARY ENGINEERING ALIGNMENT.
3. SEE DRAWING No. GE-013 FOR B-111 AND B-112 BORING PROFILES.

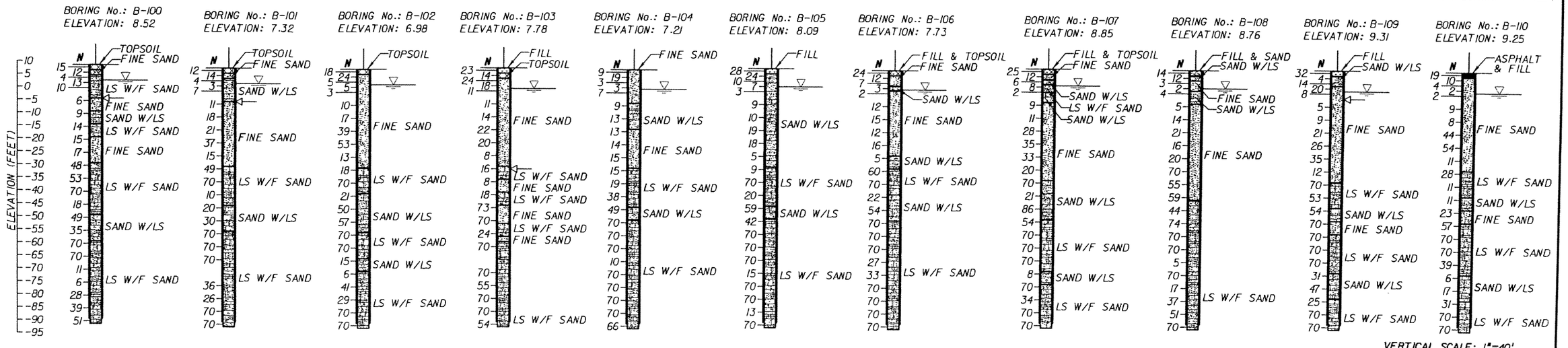

VERTICAL SCALE: 1"=40'

SK	05-06						
Designed by	Date						
SK/EP	05-06						
Drawn by	Date						
AK	05-06						
Checked by	Date						
Approved by	Date	No.	Date	By / Chk	App.	Revisions	

NORTH CORRIDOR METRORAIL EXTENSION - PRELIMINARY ENGINEERING (100% SUBMITTAL)

MIAMI-DADE COUNTY — MIAMI-DADE TRANSIT

PARSONS
7600 CORPORATE CENTER DRIVE, SUITE 500
MIAMI, FLORIDA 33126
PHONE: (786) 464-1000 FAX: (786) 845-7119
CERTIFICATE OF AUTHORIZATION NO. 1836
Approved / Date

HP CONSULTANTS INC.
License No. 9509
ARVIND KUMBHOJKAR, PH.D, P.E.
License No. 41067
10220 SW 107 Street
Miami, Fl 33176 Ph:(305)596-1585
Approved / Date

GEOTECHNICAL

BORING LOCATION PLAN

Scale 1" = 200' | Drawing GE-012 | Sheet 404

5/4/2006 11:57:53 PM c:\HP\SHT\RGEOGN12.DGN

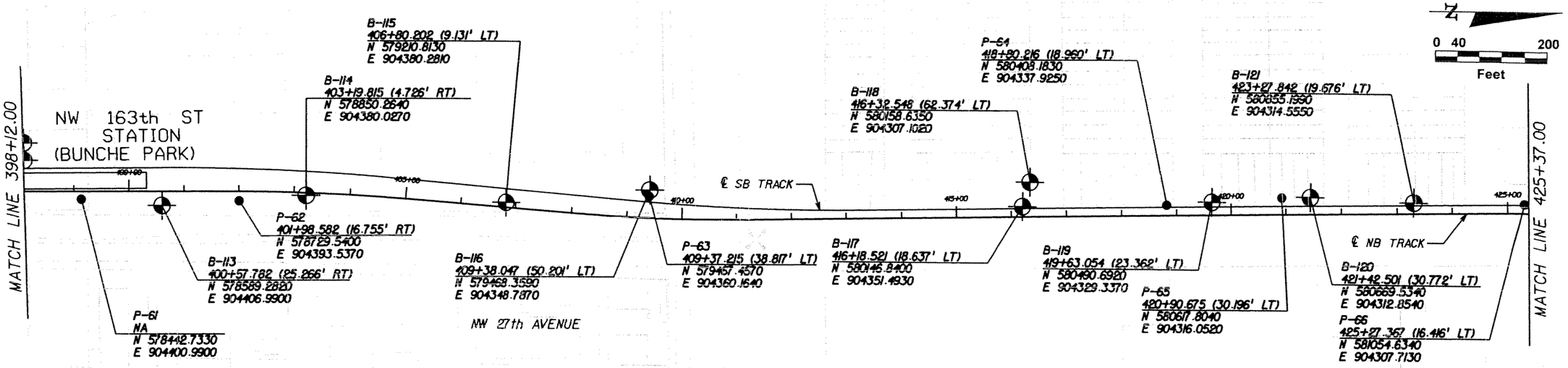

LEGEND:

- SPT BORING
- PERC. TEST
- WATER TABLE
- N — SPT VALUE
- LS — LIMESTONE
- F SAND — FINE SAND
- ASPHALT PAVEMENT
- TOPSOIL
- FILL
- FINE SAND
- SILTY SAND
- LIMESTONE W/FINE SAND
- SAND W/LIMESTONE
- ORGANICS
- SANDSTONE WITH SAND
- SAND WITH SANDSTONE
- SANDY SILT

NOTES:

1. READ THE BORING LOCATION PLAN PROFILES TOGETHER WITH DRAWINGS GE-020 TO GE-066 FOR MORE INFORMATION.
2. BORING LOCATIONS (STATIONS AND OFFSETS) BASED ON 70% PRELIMINARY ENGINEERING ALIGNMENT.
3. SEE DRAWING No. GE-012 FOR B-111 AND B-112 BORING LOCATIONS.

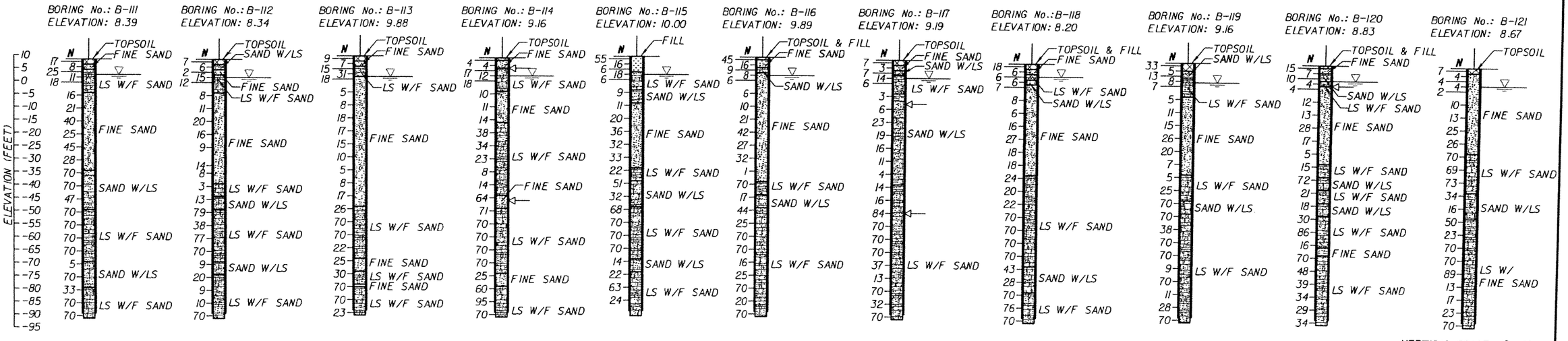

VERTICAL SCALE: 1"=40'

SK	05-06							
Designed by	Date							
SK/EP	05-06							
Drawn by	Date							
AK	05-06							
Checked by	Date							
Approved by	Date	No.	Date	By / Chk	App.	Revisions		

NORTH CORRIDOR METRORAIL EXTENSION - PRELIMINARY ENGINEERING (100% SUBMITTAL)

GEOTECHNICAL

MIAMI-DADE COUNTY — MIAMI-DADE TRANSIT

PARSONS
7600 CORPORATE CENTER DRIVE, SUITE 500
MIAMI, FLORIDA 33126
PHONE: (786) 464-1000 FAX: (786) 845-7119
CERTIFICATE OF AUTHORIZATION NO. 1838
Approved | Date

HP CONSULTANTS INC.
License No. 9509
ARVIND KUMBHOJKAR, PH.D, P.E.
License No. 41067
10220 SW 107 Street
Miami, Fl 33176 Ph:(305)596-1585
Approved | Date

BORING LOCATION PLAN

Scale: 1" = 200' | Drawing: GE-013 | Sheet: 405

5/4/2006 11:59:06 PM c:\HP\SHT\RGEOGN13.DGN

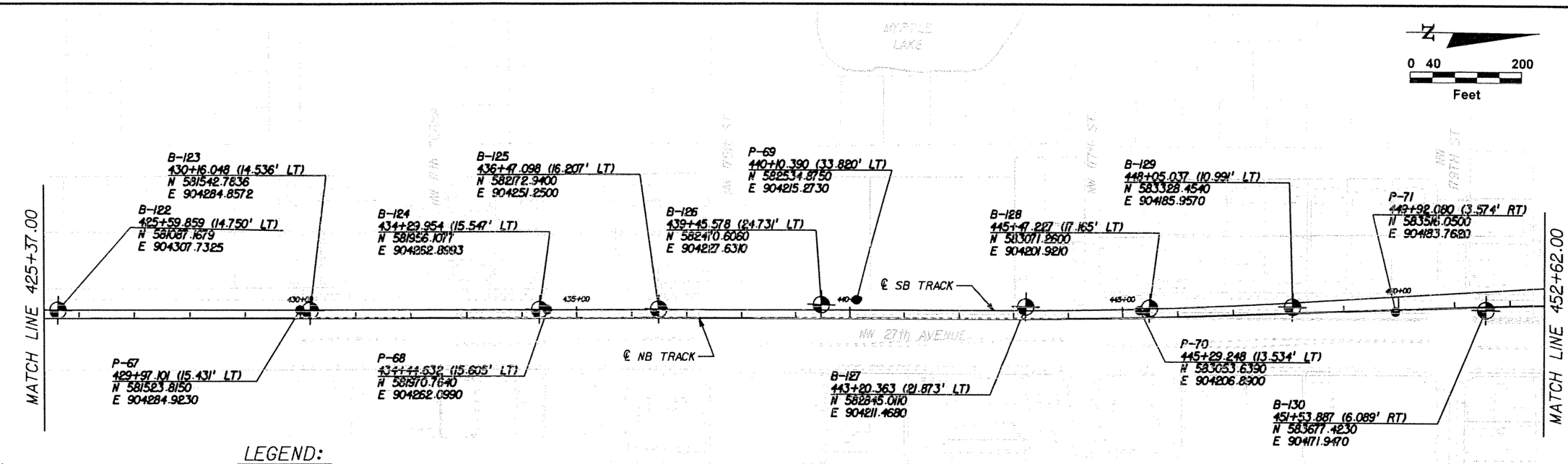

LEGEND:

- SPT BORING
- PERC. TEST
- WATER TABLE
- N — SPT VALUE
- LS — LIMESTONE
- F SAND — FINE SAND
- ASPHALT PAVEMENT
- TOPSOIL
- FILL
- FINE SAND
- SILTY SAND
- LIMESTONE W/FINE SAND
- SAND W/LIMESTONE
- ORGANICS
- SANDSTONE WITH SAND
- SAND WITH SANDSTONE
- SANDY SILT

NOTES:

1. READ THE BORING LOCATION PLAN PROFILES TOGETHER WITH DRAWINGS GE-020 TO GE-066 FOR MORE INFORMATION.
2. BORING LOCATIONS (STATIONS AND OFFSETS) BASED ON 70% PRELIMINARY ENGINEERING ALIGNMENT.

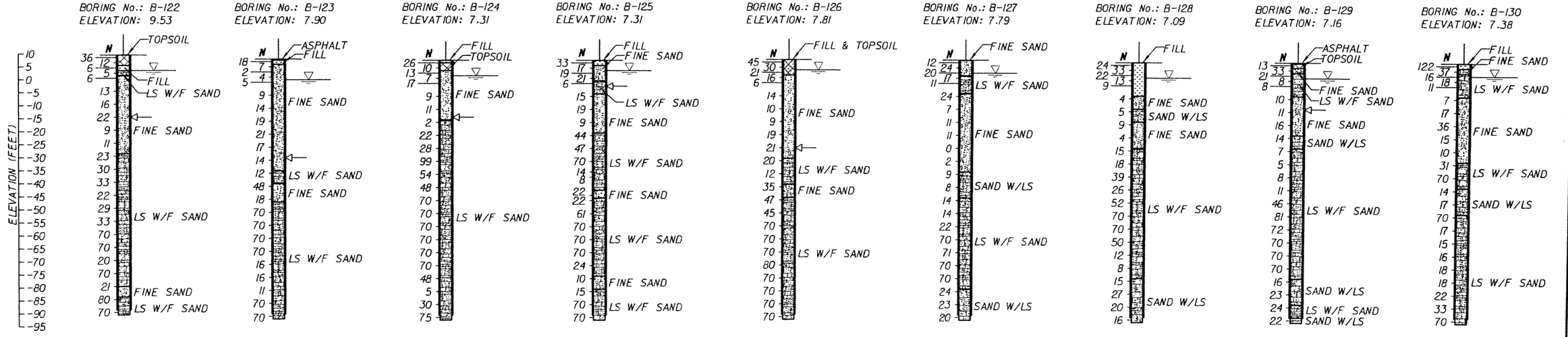

VERTICAL SCALE: 1"=40'

SK	05-06						
Designed by	Date						
SK/EP	05-06						
Drawn by	Date						
AK	05-06						
Checked by	Date						
Approved by	Date	No.	Date	By / Chk	App.	Revisions	

NORTH CORRIDOR METRORAIL EXTENSION - PRELIMINARY ENGINEERING (100% SUBMITTAL)

MIAMI-DADE COUNTY — MIAMI-DADE TRANSIT

PARSONS
7600 CORPORATE CENTER DRIVE, SUITE 500
MIAMI, FLORIDA 33126
PHONE: (786) 464-1000 FAX: (786) 845-7119
CERTIFICATE OF AUTHORIZATION NO. 1838
Approved / Date

HP CONSULTANTS INC.
License No. 9509
ARVIND KUMBHOJKAR, PH.D, P.E.
License No. 41067
10220 SW 107 Street
Miami, Fl 33176 Ph:(305)596-1585
Approved / Date

GEOTECHNICAL

BORING LOCATION PLAN

Scale 1" = 200' | Drawing GE-014 | Sheet 406

5/3/2006 6:15:34 PM c:\HP\SHT\RGEOGN14.DGN

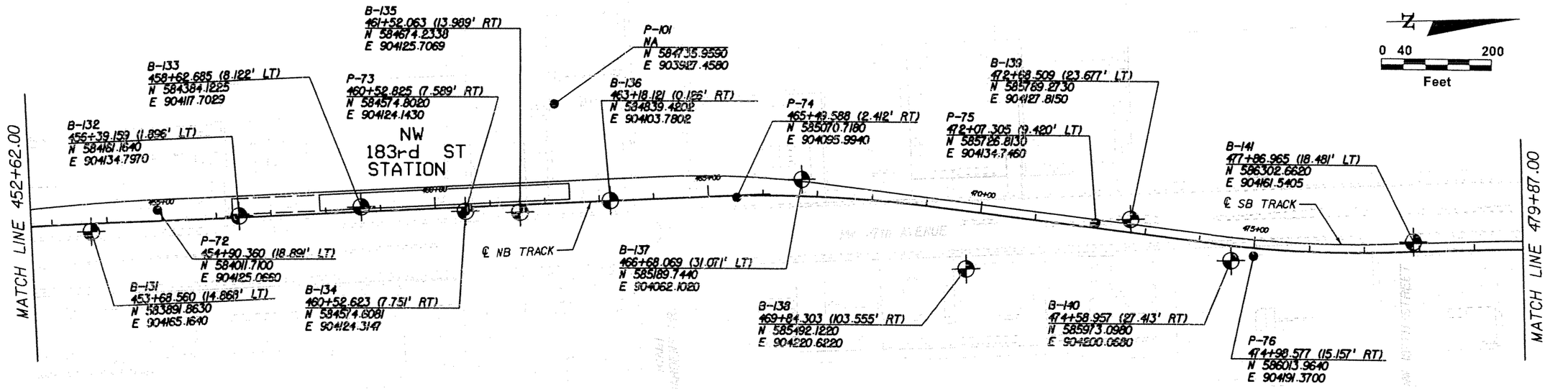

LEGEND:

- SPT BORING
- PERC. TEST
- WATER TABLE
- N SPT VALUE
- LS LIMESTONE
- F SAND FINE SAND
- ASPHALT PAVEMENT
- TOPSOIL
- FILL
- FINE SAND
- SILTY SAND
- LIMESTONE W/FINE SAND
- SAND W/LIMESTONE
- ORGANICS
- SANDSTONE WITH SAND
- SAND WITH SANDSTONE
- SANDY SILT

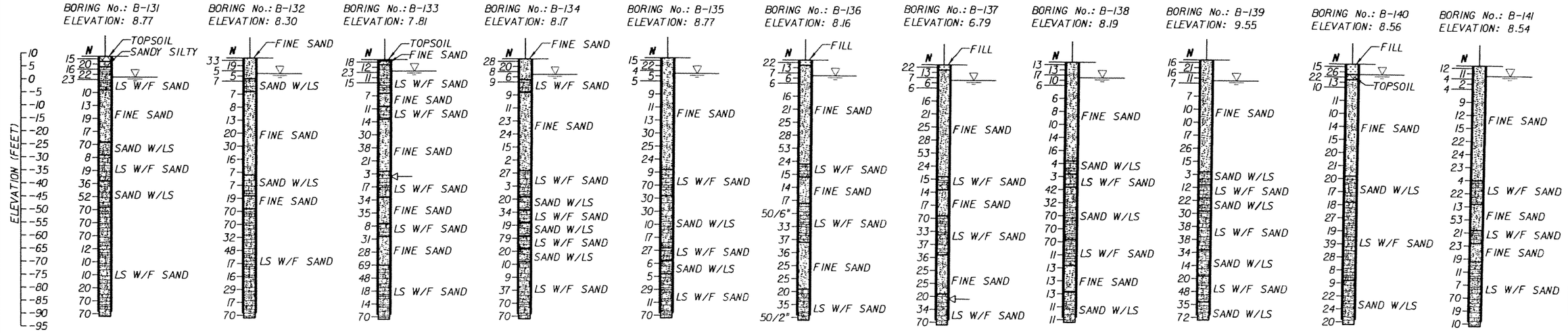

VERTICAL SCALE: 1"=40'

NOTES:

1. READ THE BORING LOCATION PLAN PROFILES TOGETHER WITH DRAWINGS GE-020 TO GE-066 FOR MORE INFORMATION.
2. BORING LOCATIONS (STATIONS AND OFFSETS) BASED ON 70% PRELIMINARY ENGINEERING ALIGNMENT.

SK Designed by	05-06 Date					
SK/EP Drawn by	05-06 Date					
AK Checked by	05-06 Date					
Approved by	Date	No.	Date	By Chk	App.	Revisions

NORTH CORRIDOR METRORAIL EXTENSION - PRELIMINARY ENGINEERING (100% SUBMITTAL)

MIAMI-DADE COUNTY

MIAMI-DADE TRANSIT

PARSONS
7600 CORPORATE CENTER DRIVE, SUITE 500
MIAMI, FLORIDA 33126
PHONE: (786) 464-1000 FAX: (786) 845-7119
CERTIFICATE OF AUTHORIZATION NO. 1836

Approved | Date

HP CONSULTANTS INC.
License No. 9509
ARVIND KUMBHOJKAR, PH.D, P.E.
License No. 41067
10220 SW 107 Street
Miami, Fl 33176 Ph:(305)596-1585

Approved | Date

GEOTECHNICAL

BORING LOCATION PLAN

Scale 1" = 200' | Drawing GE-015 | Sheet 407

5/3/2006 7:00:20 PM c:\HP\SHT\RGEOGN15.DGN

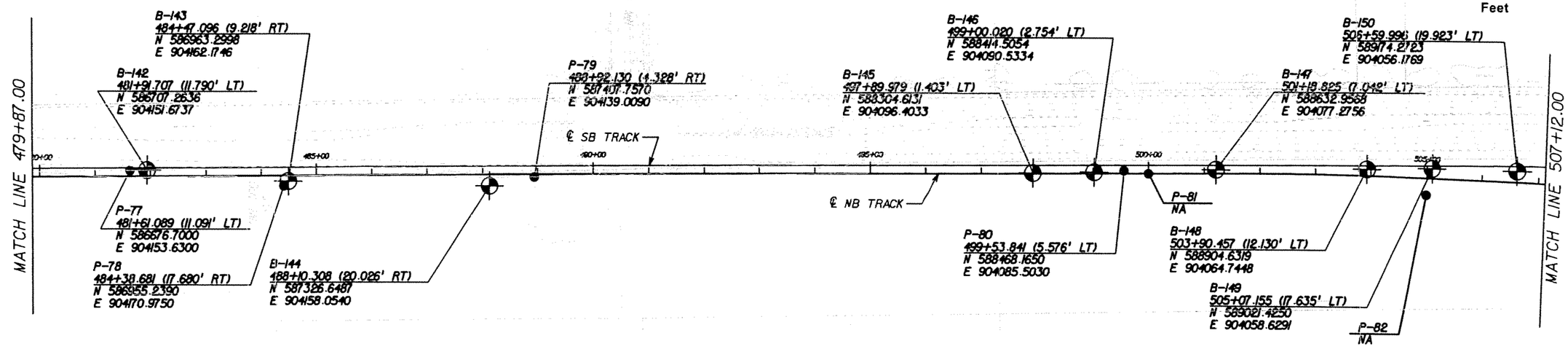

LEGEND:

- SPT BORING
- PERC. TEST
- WATER TABLE
- N SPT VALUE
- LS LIMESTONE
- F SAND FINE SAND
- ASPHALT PAVEMENT
- TOPSOIL
- FILL
- FINE SAND
- SILTY SAND
- LIMESTONE W/FINE SAND
- SAND W/LIMESTONE
- ORGANICS
- SANDSTONE WITH SAND
- SAND WITH SANDSTONE
- SANDY SILT

NOTES:

1. READ THE BORING LOCATION PLAN PROFILES TOGETHER WITH DRAWINGS GE-020 TO GE-066 FOR MORE INFORMATION.
2. BORING LOCATIONS (STATIONS AND OFFSETS) BASED ON 70% PRELIMINARY ENGINEERING ALIGNMENT.

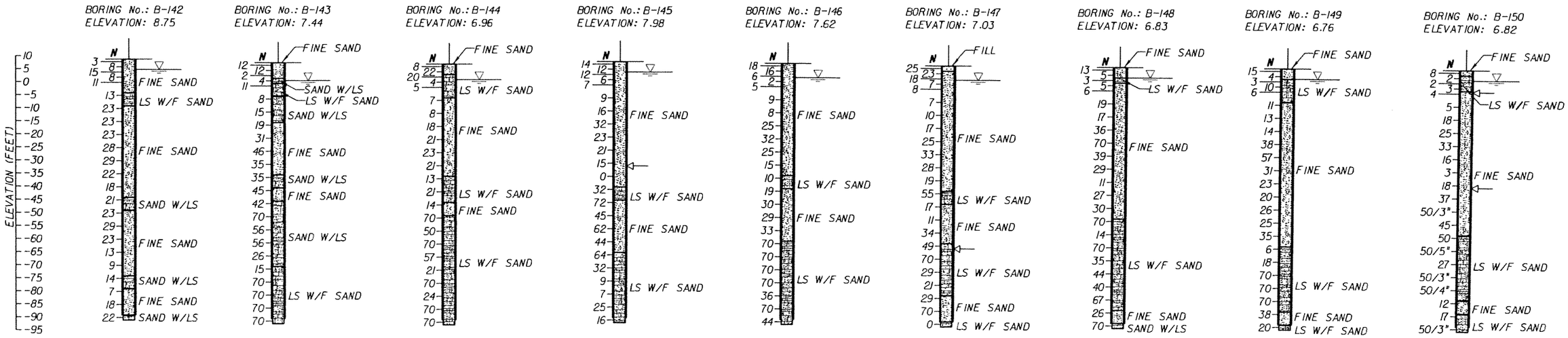

VERTICAL SCALE: 1"=40'

SK	05-06					
Designed by	Date					
SK/EP	05-06					
Drawn by	Date					
AK	05-06					
Checked by	Date					
Approved by	Date	No.	Date	By / Chk	App.	Revisions

NORTH CORRIDOR METRORAIL EXTENSION - PRELIMINARY ENGINEERING (100% SUBMITTAL)

MIAMI-DADE COUNTY — MIAMI-DADE TRANSIT

PARSONS
7600 CORPORATE CENTER DRIVE, SUITE 500
MIAMI, FLORIDA 33126
PHONE: (786) 464-1000 FAX: (786) 845-7119
CERTIFICATE OF AUTHORIZATION NO. 1838

Approved | Date

HP CONSULTANTS INC.
License No. 9509
ARVIND KUMBHOJKAR, PH.D, P.E.
License No. 41067
10220 SW 107 Street
Miami, Fl 33176 Ph:(305)596-1585

Approved | Date

GEOTECHNICAL

BORING LOCATION PLAN

Scale 1" = 200' | Drawing GE-016 | Sheet 408

5/3/2006 7:43:46 PM c:\HP\SHT\RGEOGN16.dgn

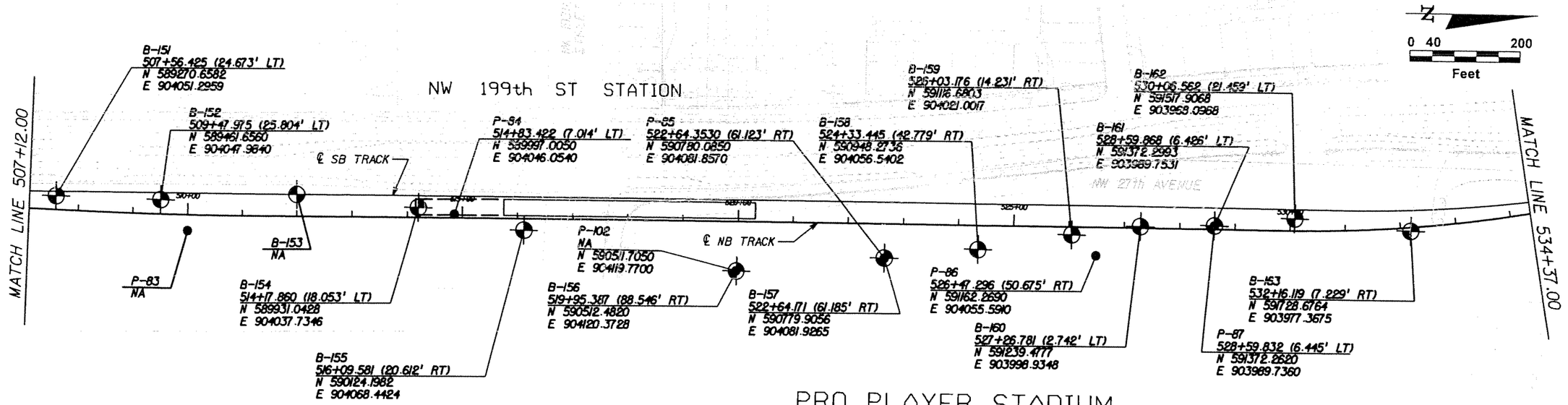

PRO PLAYER STADIUM

LEGEND:

- SPT BORING
- PERC. TEST
- WATER TABLE
- N — SPT VALUE
- LS — LIMESTONE
- F SAND — FINE SAND
- ASPHALT PAVEMENT
- TOPSOIL
- FILL
- FINE SAND
- SILTY SAND
- LIMESTONE W/FINE SAND
- SAND W/LIMESTONE
- ORGANICS
- SANDSTONE WITH SAND
- SAND WITH SANDSTONE
- SANDY SILT

NOTES:

1. READ THE BORING LOCATION PLAN PROFILES TOGETHER WITH DRAWINGS GE-020 TO GE-066 FOR MORE INFORMATION.
2. BORING LOCATIONS (STATIONS AND OFFSETS) BASED ON 70% PRELIMINARY ENGINEERING ALIGNMENT.
3. SEE DRAWING No. GE-018 FOR B-162 AND B-163 BORING PROFILES.

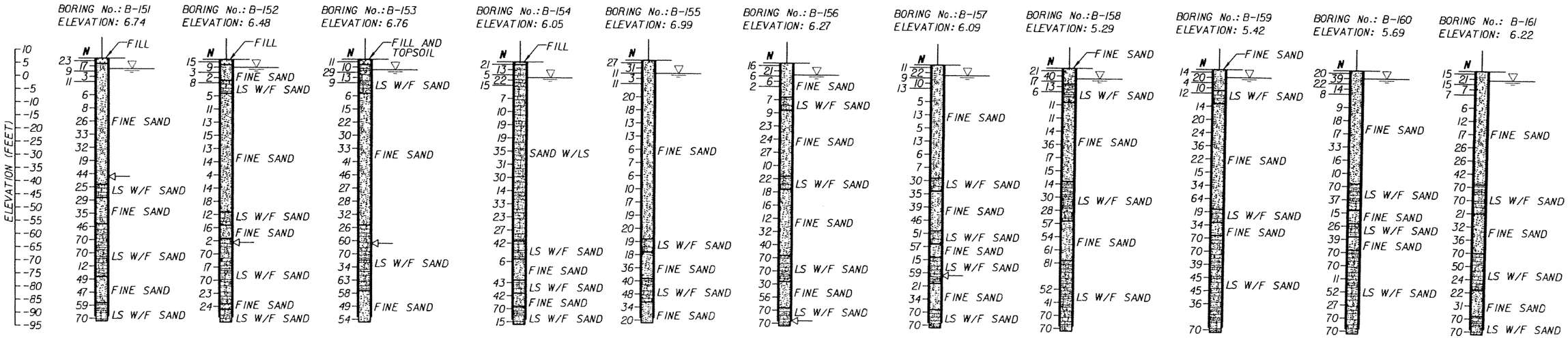

VERTICAL SCALE: 1"=40'

SK	05-06					
Designed by	Date					
SK/EP	05-06					
Drawn by	Date					
AK	05-06					
Checked by	Date					
Approved by	Date	No.	Date	By / Chk	App.	Revisions

NORTH CORRIDOR METRORAIL EXTENSION - PRELIMINARY ENGINEERING (100% SUBMITTAL)

GEOTECHNICAL

MIAMI-DADE COUNTY — MIAMI-DADE TRANSIT

PARSONS
7600 CORPORATE CENTER DRIVE, SUITE 500
MIAMI, FLORIDA 33126
PHONE: (786) 464-1000 FAX: (786) 845-7119
CERTIFICATE OF AUTHORIZATION NO. 1838

HP CONSULTANTS INC.
License No. 9509
ARVIND KUMBHOJKAR, PH.D, P.E.
License No. 41067
10220 SW 107 Street
Miami, Fl 33176 Ph:(305)596-1585

Approved | Date | Approved | Date

BORING LOCATION PLAN

Scale 1" = 200' | Drawing GE-017 | Sheet 409

5/5/2006 12:01:06 AM c:\HP\SHT\RGEOGN17.DGN

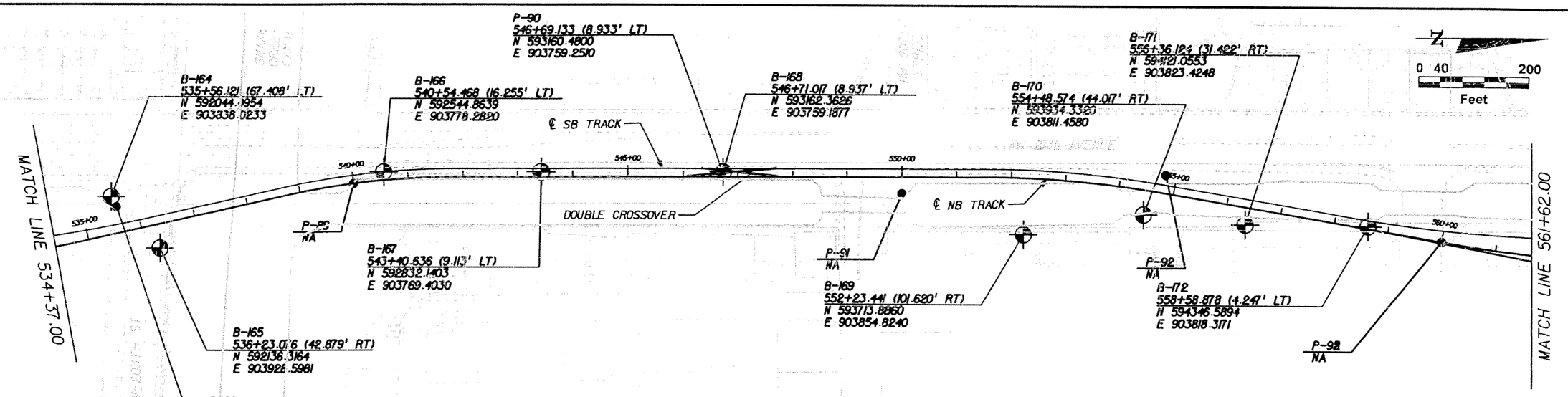

LEGEND:

- SPT BORING
- PERC. TEST
- WATER TABLE
- N — SPT VALUE
- LS — LIMESTONE
- F SAND — FINE SAND
- ASPHALT PAVEMENT
- TOPSOIL
- FILL
- FINE SAND
- SILTY SAND
- LIMESTONE W/FINE SAND
- SAND W/LIMESTONE
- ORGANICS
- SANDSTONE WITH SAND
- SAND WITH SANDSTONE
- SANDY SILT

NOTES:

1. READ THE BORING LOCATION PLAN PROFILES TOGETHER WITH DRAWINGS GE-020 TO GE-066 FOR MORE INFORMATION.
2. BORING LOCATIONS (STATIONS AND OFFSETS) BASED ON 70% PRELIMINARY ENGINEERING ALIGNMENT.
3. SEE DRAWING No. GE-017 FOR B-162 AND B-163 BORING LOCATIONS.

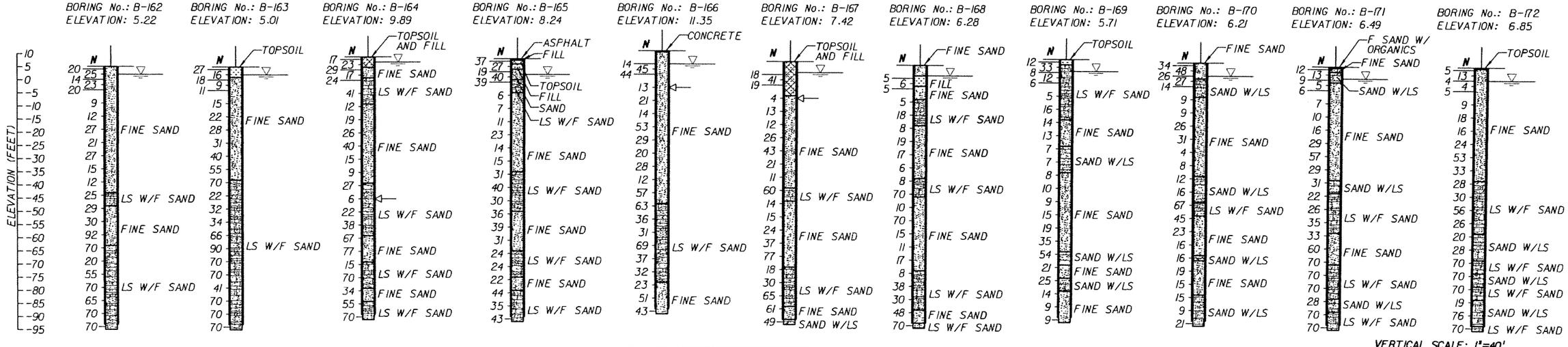

VERTICAL SCALE: 1"=40'

SK	05-06					
Designed by	Date					
SK/EP	05-06					
Drawn by	Date					
AK	05-06					
Checked by	Date					
Approved by	Date	No.	Date	By / Chk	App.	Revisions

NORTH CORRIDOR METRORAIL EXTENSION - PRELIMINARY ENGINEERING (100% SUBMITTAL)

MIAMI-DADE COUNTY — MIAMI-DADE TRANSIT

PARSONS
7600 CORPORATE CENTER DRIVE, SUITE 500
MIAMI, FLORIDA 33126
PHONE: (786) 464-1000 FAX: (786) 845-7119
CERTIFICATE OF AUTHORIZATION NO. 1638

HP CONSULTANTS INC.
License No. 9509
ARVIND KUMBHOJKAR, PH.D, P.E.
License No. 41067
10220 SW 107 Street
Miami, Fl 33176 Ph:(305)596-1585

GEOTECHNICAL

BORING LOCATION PLAN

Approved	Date	Approved	Date	Scale	Drawing	Sheet
				1" = 200'	GE-018	410

5/5/2006 12:02:23 AM c:\HP\SHT\RGEOGN18.DGN

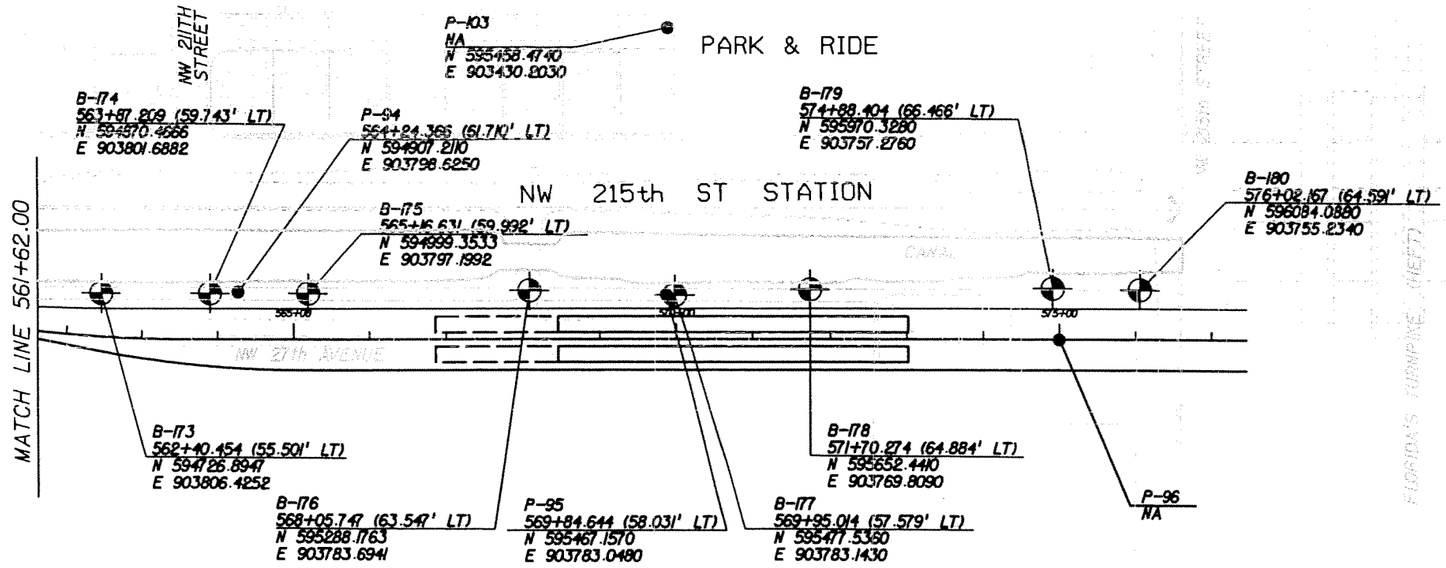

N

0 40 200

Feet

LEGEND:

- SPT BORING
- PERC. TEST
- WATER TABLE
- N SPT VALUE
- LS LIMESTONE
- F SAND FINE SAND
- ASPHALT PAVEMENT
- TOPSOIL
- FILL
- FINE SAND
- SILTY SAND
- LIMESTONE W/FINE SAND
- SAND W/LIMESTONE
- ORGANICS
- SANDSTONE WITH SAND
- SAND WITH SANDSTONE
- SANDY SILT

NOTES:

1. READ THE BORING LOCATION PLAN PROFILES TOGETHER WITH DRAWINGS GE-020 TO GE-066 FOR MORE INFORMATION.
2. BORING LOCATIONS (STATIONS AND OFFSETS) BASED ON 70% PRELIMINARY ENGINEERING ALIGNMENT.

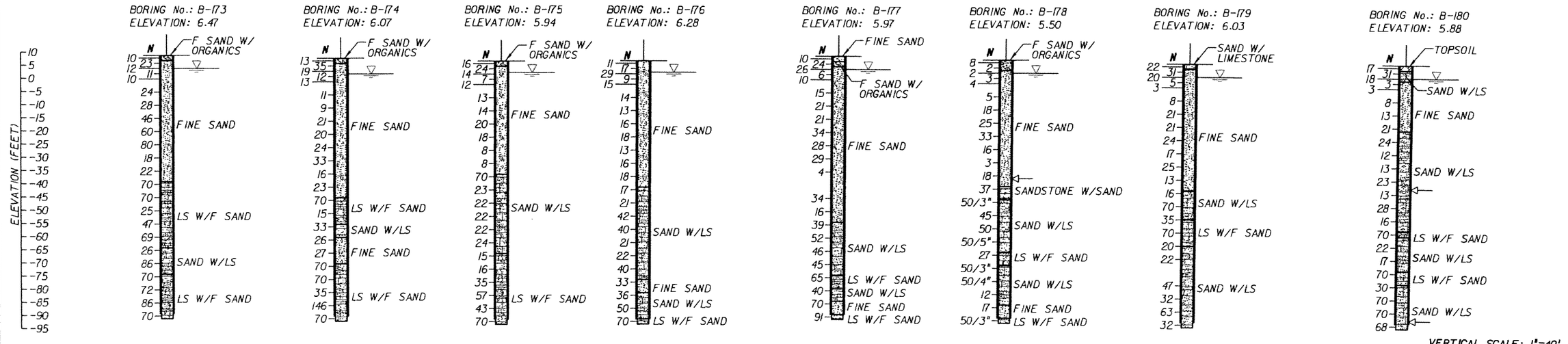

VERTICAL SCALE: 1"=40'

SK	05-06					
Designed by	Date					
SK/EP	05-06					
Drawn by	Date					
AK	05-06					
Checked by	Date					
Approved by	Date	No.	Date	By / Chk	App.	Revisions

NORTH CORRIDOR METRORAIL EXTENSION - PRELIMINARY ENGINEERING (100% SUBMITTAL)

GEOTECHNICAL

MIAMI-DADE COUNTY

MIAMI-DADE TRANSIT

PARSONS
7600 CORPORATE CENTER DRIVE, SUITE 500
MIAMI, FLORIDA 33126
PHONE: (786) 464-1000 FAX: (786) 845-7119
CERTIFICATE OF AUTHORIZATION NO. 1838

Approved | Date

HP CONSULTANTS INC.
License No. 9509
ARVIND KUMBHOJKAR, PH.D. P.E.
License No. 41067
10220 SW 107 Street
Miami, Fl 33176 Ph:(305)596-1585

Approved | Date

BORING LOCATION PLAN

Scale	Drawing	Sheet
1" = 200'	GE-019	4

5/3/2006 10:32:56 PM c:\HP\SHT\RGEOGN19.DGN

BORING No.: FB-1
LOCATION: NA
ELEVATION: 5.71
HAMMER: SAFETY
TYPE OF RIG: B-57
DATE: 10/18/05

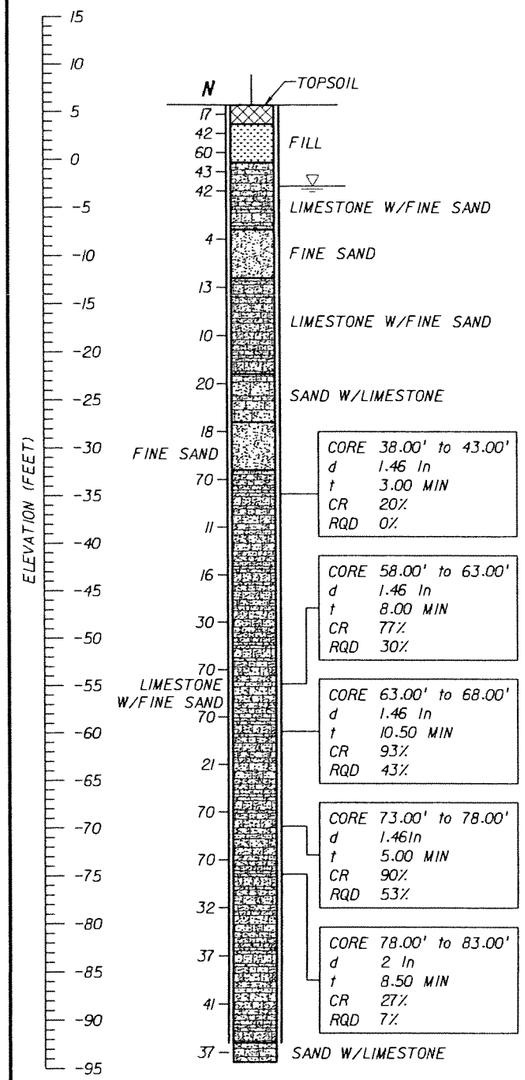

BORING TERMINATED AT 100 FT DEPTH

BORING No.: FB-2
LOCATION: NA
ELEVATION: 6.21
HAMMER: SAFETY
TYPE OF RIG: B-57
DATE: 10/26/05

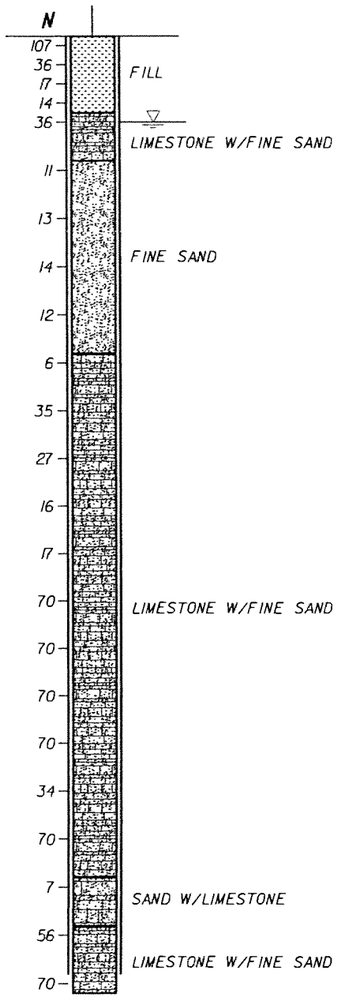

BORING TERMINATED AT 100 FT DEPTH

BORING No.: FB-3
LOCATION: 82+87.015 (55.986' LT)
ELEVATION: 12.66
HAMMER: SAFETY
TYPE OF RIG: B-53
DATE: 10/10/05

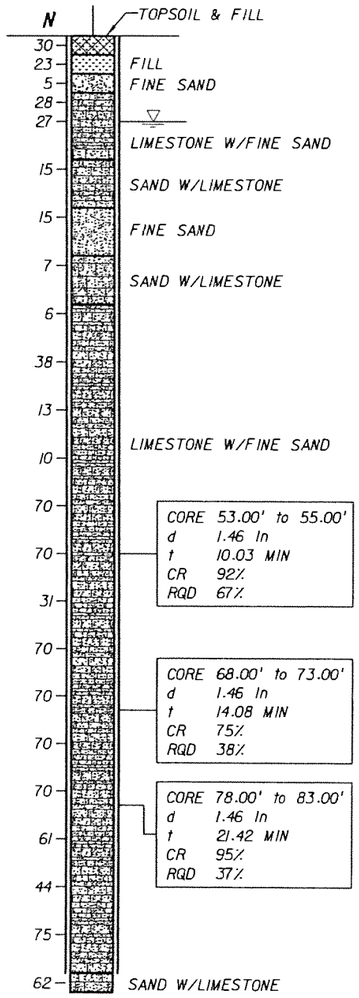

BORING TERMINATED AT 100 FT DEPTH

BORING No.: FB-4
LOCATION: 85+14.589 (62.562' LT)
ELEVATION: 13.03
HAMMER: SAFETY
TYPE OF RIG: B-53
DATE: 10/11/05

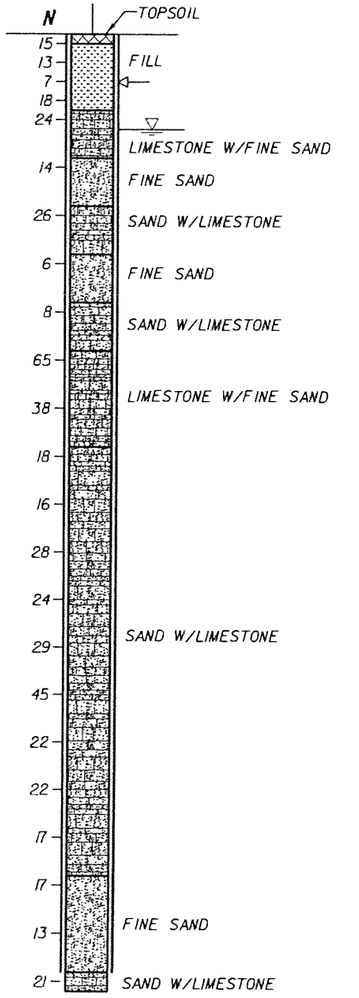

BORING TERMINATED AT 100 FT DEPTH

VERTICAL SCALE: 1"=16'

LEGEND:

- ASPHALT PAVEMENT
- (TOPSOIL) BLACK/DARK BROWN/DARK GRAY TO GRAY, SILTY SAND WITH ROOTS, ORGANICS, AND OTHER MATERIALS
- (FILL) LIMEROCK FRAGMENTS, COARSE GRAVEL TO SILT SIZE, IN SHADES OF BROWN OR GRAY, OCCASIONALLY MIXED WITH TOP SOIL
- (FINE SAND) VERY LOOSE TO VERY DENSE, FINE-SAND-SIZE MATERIAL IN SHADES OF BROWN, GRAY, OR OTHERS COLORS, OCCASIONALLY ORGANIC STAINED
- (SILTY SAND) SILTY SAND-SIZE MATERIAL IN SHADES OF BROWN/GRAY/OTHER COLORS POSSIBLY DISINTEGRATED SEDIMETARY ROCK
- (LIMESTONE WITH FINE SAND) VUGGY, SEDIMENTARY ROCK MADE OF $CaCO_3$, WITH SAND-SIZE MATERIAL, IN SHADES OF BROWN/GRAY/OTHER COLORS, OCCASIONALLY WITH SANDSTONE AND SHELL FRAGMENTS
- (SAND WITH LIMESTONE) SAND-SIZE MATERIAL WITH LIMESTONE FRAGMENTS IN SHADES OF BROWN, GRAY, OR OTHER COLORS, SOMETIMES WITH SANDSTONE FRAGMENTS
- (ORGANICS) DARK GRAY TO BLACK, SILT TO FINE-SAND-SIZE MATERIAL HAVING ORGANIC CONTENT > 5%
- (SANDSTONE WITH SAND) SEDIMENTARY ROCK MADE OF SAND-SIZE MATERIAL IN $CaCO_3$ MATRIX, IN SHADES OF BROWN OR GRAY, WITH FINE-SAND-SIZE MATERIAL
- (SAND WITH SANDSTONE) SAND-SIZE MATERIAL WITH SANDSTONE FRAGMENTS IN SHADES OF BROWN/GRAY/OTHER COLORS
- (SANDY SILT) SANDY, SILT-SIZE MATERIAL IN SHADES OF BLACK/BROWN/GRAY, POSSIBLY DISINTEGRATED SEDIMETARY ROCK

NOTES:

- WATER TABLE AT THE TIME OF DRILLING
- N — NUMBERS TO THE LEFT OF BORINGS INDICATE SPT VALUE FOR 1 FOOT (12") PENETRATION (UNLESS OTHERWISE NOTED)
- d — DIAMETER
- t — TIME
- NA — NOT AVAILABLE
- CR — CORE RECOVERY
- RQD — ROCK QUALITY DESIGNATION
- γ_d — UNIT WEIGHT lb/cft
- q_u — UNCONFINED COMPRESSION AT SAMPLE DEPTH (tsf)
- q_{st} — SPLIT TENSILE STRENGTH AT SAMPLE DEPTH (tsf)
- ⟵ — LOSS OF CIRCULATION
- WOH — WEIGHT OT THE HAMMER
- CASING USED

NOTES:

1. THE LIMESTONE MAY BE HARD TO EXCAVATE AND DEWATER; SPECIAL EQUIPMENT AND TOOLS MAY BE REQUIRED.
2. BORING LOCATIONS (STATIONS AND OFFSETS) BASED ON 70% PRELIMINARY ENGINEERING ALIGNMENT. SEE BORING LOCATION PLANS FOR SPECIFIC COORDINATE DATA.

ENVIRONMENTAL CLASSIFICATION

SEE THE GEOTECHNICAL REPORT

RELATION OF RQD AND IN-SITU ROCK QUALITY	
RQD (%)	ROCK QUALITY
90-100	EXCELLENT
75-90	GOOD
50-75	FAIR
25-50	POOR
0-25	VERY POOR

GRANULAR MATERIALS

RELATIVE DENSITY	SAFETY HAMMER SPT N-VALUE (BLOW/FOOT)	AUTOMATIC HAMMER SPT N-VALUE (BLOW/FOOT)
VERY LOOSE	LESS THAN 4	LESS THAN 3
LOOSE	4 - 10	3 - 7
MEDIUM DENSE	10 - 30	7 - 21
DENSE	30 - 50	21 - 35
VERY DENSE	GREATER THAN 50	GREATER THAN 35

SK	05-06				
Designed by	Date				
SK/EP	05-06				
Drawn by	Date				
AK	05-06				
Checked by	Date				
Approved by	Date	No.	Date	By / Chk	App.	Revisions

NORTH CORRIDOR METRORAIL EXTENSION - PRELIMINARY ENGINEERING (100% SUBMITTAL)

MIAMI-DADE COUNTY — MIAMI-DADE TRANSIT

PARSONS
7600 CORPORATE CENTER DRIVE, SUITE 500
MIAMI, FLORIDA 33126
PHONE: (786) 464-1000 FAX: (786) 845-7119
CERTIFICATE OF AUTHORIZATION NO. 1838
Approved Date

HP CONSULTANTS INC.
License No. 9509
ARVIND KUMBHOJKAR, PH.D. P.E.
License No. 41067
10220 SW 107 Street
Miami, Fl 33176 Ph:(305)596-1585
Approved Date

GEOTECHNICAL

REPORT OF CORE BORINGS

Scale 1" = 16' | Drawing GE-020 | Sheet 4 12

5/4/2006 1:53:03 AM c:\HP\BORING_PROFILE\Rgeonc16.dgn

BORING No.: FB-5
LOCATION: 90+23.981 (65.525' RT)
ELEVATION: 13.26
HAMMER: SAFETY
TYPE OF RIG: B-53
DATE: 10/14/05

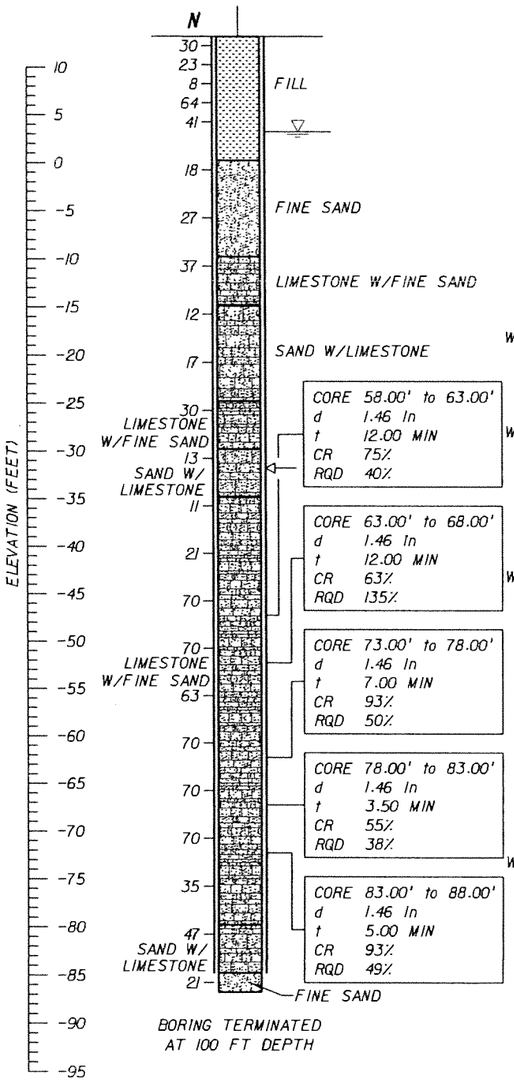

BORING TERMINATED AT 100 FT DEPTH

BORING No.: FB-6
LOCATION: 92+34.487 (60.013' LT)
ELEVATION: 9.24
HAMMER: SAFETY
TYPE OF RIG: B-53
DATE: 10/12/05

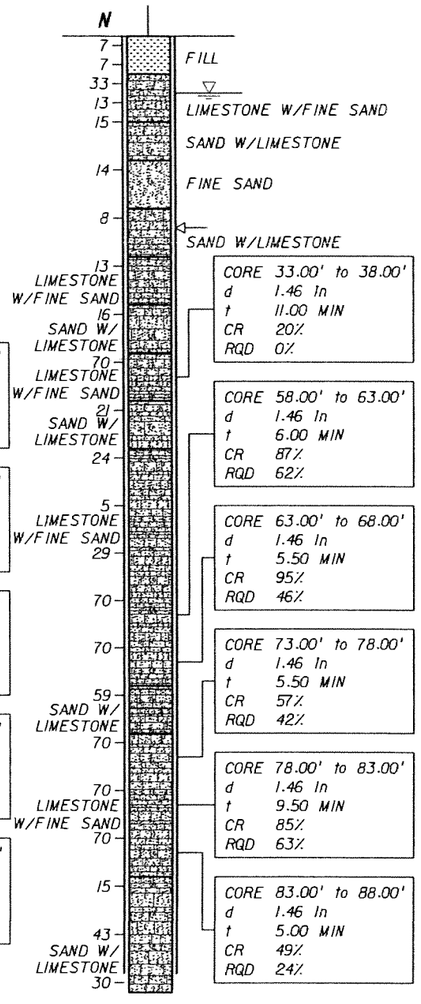

BORING TERMINATED AT 100 FT DEPTH

BORING No.: FB-7
LOCATION: 94+18.425 (67.851' LT)
ELEVATION: 9.13
HAMMER: SAFETY
TYPE OF RIG: B-53
DATE: 10/17/05

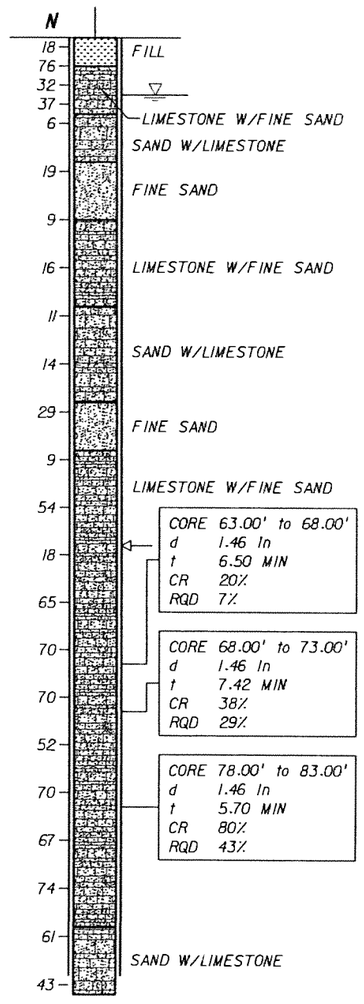

BORING TERMINATED AT 100 FT DEPTH

BORING No.: FB-8
LOCATION: 95+99.181 (44.732' LT)
ELEVATION: 9.61
HAMMER: SAFETY
TYPE OF RIG: B-53
DATE: 10/20/05

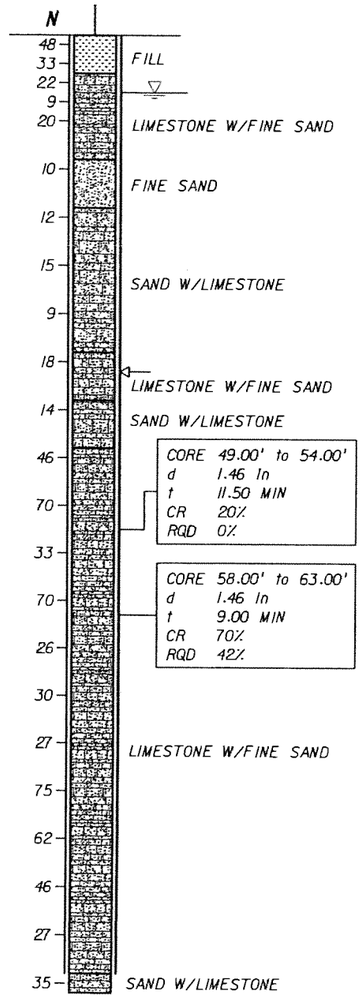

BORING TERMINATED AT 100 FT DEPTH

LEGEND:

- ASPHALT PAVEMENT
- (TOPSOIL) BLACK/DARK BROWN/DARK GRAY TO GRAY, SILTY SAND WITH ROOTS, ORGANICS, AND OTHER MATERIALS
- (FILL) LIMEROCK FRAGMENTS, COARSE GRAVEL TO SILT SIZE, IN SHADES OF BROWN OR GRAY, OCCASIONALLY MIXED WITH TOP SOIL
- (FINE SAND) VERY LOOSE TO VERY DENSE, FINE-SAND-SIZE MATERIAL IN SHADES OF BROWN, GRAY, OR OTHERS COLORS, OCCASIONALLY ORGANIC STAINED
- (SILTY SAND) SILTY SAND-SIZE MATERIAL IN SHADES OF BROWN/GRAY/OTHER COLORS POSSIBLY DISINTEGRATED SEDIMETARY ROCK
- (LIMESTONE WITH FINE SAND) VUGGY, SEDIMENTARY ROCK MADE OF $CaCO_3$, WITH SAND-SIZE MATERIAL, IN SHADES OF BROWN/GRAY/OTHER COLORS, OCCASIONALLY WITH SANDSTONE AND SHELL FRAGMENTS
- (SAND WITH LIMESTONE) SAND-SIZE MATERIAL WITH LIMESTONE FRAGMENTS IN SHADES OF BROWN, GRAY, OR OTHER COLORS, SOMETIMES WITH SANDSTONE FRAGMENTS
- (ORGANICS) DARK GRAY TO BLACK, SILT TO FINE-SAND-SIZE MATERIAL HAVING ORGANIC CONTENT > 5%
- (SANDSTONE WITH SAND) SEDIMENTARY ROCK MADE OF SAND-SIZE MATERIAL IN $CaCO_3$ MATRIX, IN SHADES OF BROWN OR GRAY, WITH FINE-SAND-SIZE MATERIAL
- (SAND WITH SANDSTONE) SAND-SIZE MATERIAL WITH SANDSTONE FRAGMENTS IN SHADES OF BROWN/GRAY/OTHER COLORS
- (SANDY SILT) SANDY, SILT-SIZE MATERIAL IN SHADES OF BLACK/BROWN/GRAY, POSSIBLY DISINTEGRATED SEDIMETARY ROCK

NOTES:

- WATER TABLE AT THE TIME OF DRILLING
- N — NUMBERS TO THE LEFT OF BORINGS INDICATE SPT VALUE FOR 1 FOOT (12") PENETRATION (UNLESS OTHERWISE NOTED)
- d — DIAMETER
- t — TIME
- NA — NOT AVAILABLE
- CR — CORE RECOVERY
- RQD — ROCK QUALITY DESIGNATION
- γ — UNIT WEIGHT lb/cft
- q_u — UNCONFINED COMPRESSION AT SAMPLE DEPTH (tsf)
- q_{st} — SPLIT TENSILE STRENGTH AT SAMPLE DEPTH (tsf)
- ⇦ — LOSS OF CIRCULATION
- WOH — WEIGHT OT THE HAMMER
- CASING USED

NOTES:

1. THE LIMESTONE MAY BE HARD TO EXCAVATE AND DEWATER; SPECIAL EQUIPMENT AND TOOLS MAY BE REQUIRED.
2. BORING LOCATIONS (STATIONS AND OFFSETS) BASED ON 70% PRELIMINARY ENGINEERING ALIGNMENT. SEE BORING LOCATION PLANS FOR SPECIFIC COORDINATE DATA.

VERTICAL SCALE: 1"=16'

ENVIRONMENTAL CLASSIFICATION

SEE THE GEOTECHNICAL REPORT

RELATION OF RQD AND IN-SITU ROCK QUALITY	
RQD (%)	ROCK QUALITY
90-100	EXCELLENT
75-90	GOOD
50-75	FAIR
25-50	POOR
0-25	VERY POOR

GRANULAR MATERIALS

RELATIVE DENSITY	SAFETY HAMMER SPT N-VALUE (BLOW/FOOT)	AUTOMATIC HAMMER SPT N-VALUE (BLOW/FOOT)
VERY LOOSE	LESS THAN 4	LESS THAN 3
LOOSE	4 - 10	3 - 7
MEDIUM DENSE	10 - 30	7 - 21
DENSE	30 - 50	21 - 35
VERY DENSE	GREATER THAN 50	GREATER THAN 35

SK	05-06				
Designed by	Date				
SK/EP	05-06				
Drawn by	Date				
AK	05-06				
Checked by	Date				
Approved by	Date	No.	Date	By / Chk	App.	Revisions

NORTH CORRIDOR METRORAIL EXTENSION - PRELIMINARY ENGINEERING (100% SUBMITTAL)

MIAMI-DADE COUNTY — MIAMI-DADE TRANSIT

PARSONS
7600 CORPORATE CENTER DRIVE, SUITE 500
MIAMI, FLORIDA 33126
PHONE: (786) 464-1000 FAX: (786) 845-7119
CERTIFICATE OF AUTHORIZATION NO. 1838
Approved Date

HP CONSULTANTS INC.
License No. 9509
ARVIND KUMBHOJKAR, PH.D, P.E.
License No. 41067
10220 SW 107 Street
Miami, Fl 33176 Ph:(305)596-1585
Approved Date

GEOTECHNICAL

REPORT OF CORE BORINGS

Scale 1" = 16' | Drawing GE-021 | Sheet 4 of 13

5/4/2006 1:53:33 AM c:\HP\BORING_PROFILE\Rgeonc16.dgn

B-1

BORING No.: B-1
LOCATION: 99+36.309 (6.536' LT)
ELEVATION: 10.80
HAMMER: AUTOMATIC
TYPE OF RIG: CME 55
DATE: 01/04/05

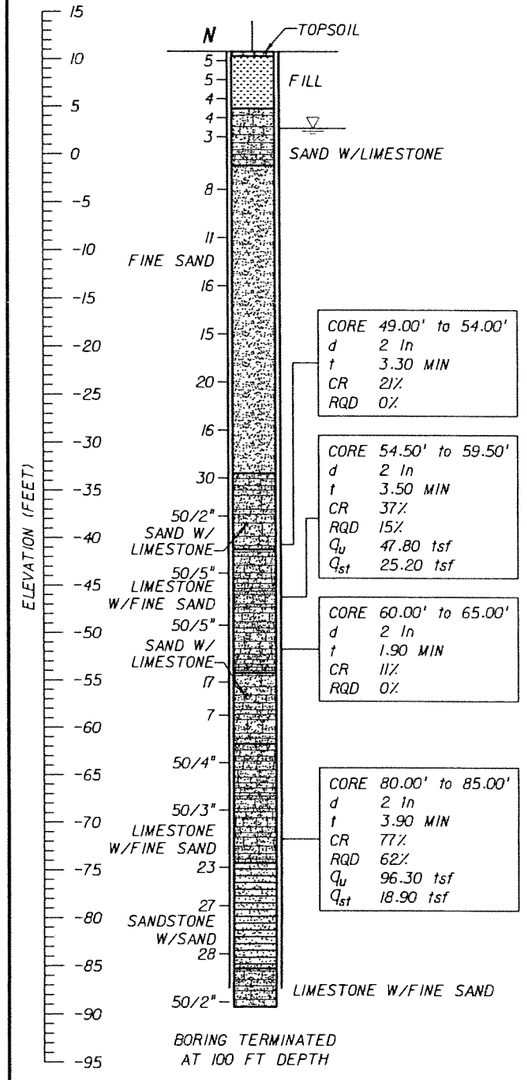

BORING TERMINATED AT 100 FT DEPTH

B-2

BORING No.: B-2
LOCATION: 102+38.700 (3.600' LT)
ELEVATION: 9.76
HAMMER: AUTOMATIC
TYPE OF RIG: CME 55
DATE: 06/05/05

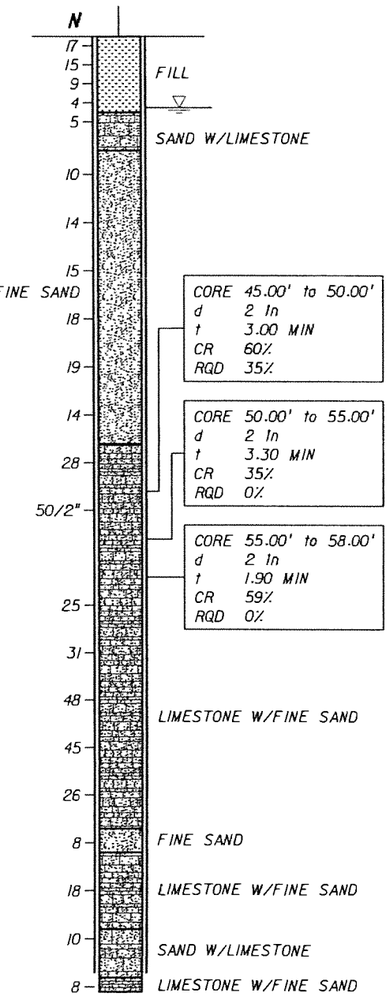

BORING TERMINATED AT 100 FT DEPTH

B-3

BORING No.: B-3
LOCATION: 105+82.190 (0.734' RT)
ELEVATION: 8.60
HAMMER: AUTOMATIC
TYPE OF RIG: CME 75
DATE: 05/13/05

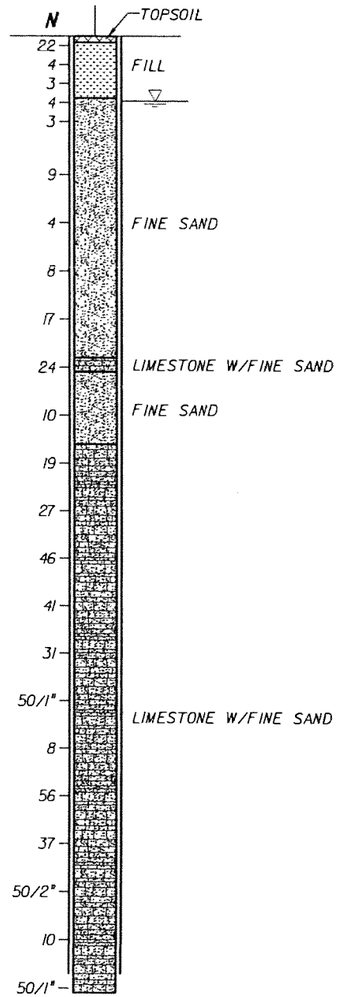

BORING TERMINATED AT 100 FT DEPTH

VERTICAL SCALE: 1"=16'

B-4

BORING No.: B-4
LOCATION: 108+79.995 (0.893' LT)
ELEVATION: 8.80
HAMMER: AUTOMATIC
TYPE OF RIG: CME 75
DATE: 05/14/05

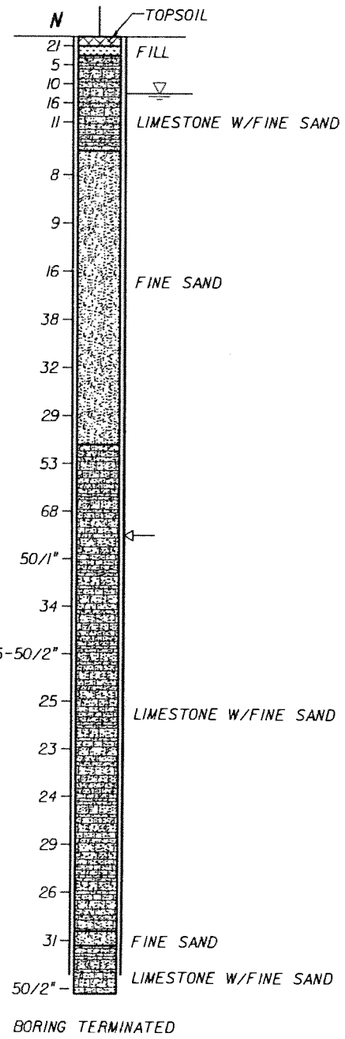

BORING TERMINATED AT 100 FT DEPTH

ENVIRONMENTAL CLASSIFICATION

SEE THE GEOTECHNICAL REPORT

LEGEND:

- ASPHALT PAVEMENT
- (TOPSOIL) BLACK/DARK BROWN/DARK GRAY TO GRAY, SILTY SAND WITH ROOTS, ORGANICS, AND OTHER MATERIALS
- (FILL) LIMEROCK FRAGMENTS, COARSE GRAVEL TO SILT SIZE, IN SHADES OF BROWN OR GRAY, OCCASIONALLY MIXED WITH TOP SOIL
- (FINE SAND) VERY LOOSE TO VERY DENSE, FINE-SAND-SIZE MATERIAL IN SHADES OF BROWN, GRAY, OR OTHERS COLORS, OCCASIONALLY ORGANIC STAINED
- (SILTY SAND) SILTY SAND-SIZE MATERIAL IN SHADES OF BROWN/GRAY/OTHER COLORS POSSIBLY DISINTEGRATED SEDIMETARY ROCK
- (LIMESTONE WITH FINE SAND) VUGGY, SEDIMENTARY ROCK MADE OF $CaCO_3$, WITH SAND-SIZE MATERIAL, IN SHADES OF BROWN/GRAY/OTHER COLORS, OCCASIONALLY WITH SANDSTONE AND SHELL FRAGMENTS
- (SAND WITH LIMESTONE) SAND-SIZE MATERIAL WITH LIMESTONE FRAGMENTS IN SHADES OF BROWN, GRAY, OR OTHER COLORS, SOMETIMES WITH SANDSTONE FRAGMENTS
- (ORGANICS) DARK GRAY TO BLACK, SILT TO FINE-SAND-SIZE MATERIAL HAVING ORGANIC CONTENT > 5%
- (SANDSTONE WITH SAND) SEDIMENTARY ROCK MADE OF SAND-SIZE MATERIAL IN $CaCO_3$ MATRIX, IN SHADES OF BROWN OR GRAY, WITH FINE-SAND-SIZE MATERIAL
- (SAND WITH SANDSTONE) SAND-SIZE MATERIAL WITH SANDSTONE FRAGMENTS IN SHADES OF BROWN/GRAY/OTHER COLORS
- (SANDY SILT) SANDY, SILT-SIZE MATERIAL IN SHADES OF BLACK/BROWN/GRAY, POSSIBLY DISINTEGRATED SEDIMETARY ROCK

NOTES:

- WATER TABLE AT THE TIME OF DRILLING
- N — NUMBERS TO THE LEFT OF BORINGS INDICATE SPT VALUE FOR 1 FOOT (12") PENETRATION (UNLESS OTHERWISE NOTED)
- d — DIAMETER
- t — TIME
- NA — NOT AVAILABLE
- CR — CORE RECOVERY
- RQD — ROCK QUALITY DESIGNATION
- δ — UNIT WEIGHT lb/cft
- q_u — UNCONFINED COMPRESSION AT SAMPLE DEPTH (tsf)
- q_{st} — SPLIT TENSILE STRENGTH AT SAMPLE DEPTH (tsf)
- ⟵ — LOSS OF CIRCULATION
- WOH — WEIGHT OT THE HAMMER
- CASING USED

GRANULAR MATERIALS

RELATIVE DENSITY	SAFETY HAMMER SPT N-VALUE (BLOW/FOOT)	AUTOMATIC HAMMER SPT N-VALUE (BLOW/FOOT)
VERY LOOSE	LESS THAN 4	LESS THAN 3
LOOSE	4 - 10	3 - 7
MEDIUM DENSE	10 - 30	7 - 21
DENSE	30 - 50	21 - 35
VERY DENSE	GREATER THAN 50	GREATER THAN 35

RELATION OF RQD AND IN-SITU ROCK QUALITY

RQD (%)	ROCK QUALITY
90-100	EXCELLENT
75-90	GOOD
50-75	FAIR
25-50	POOR
0-25	VERY POOR

NOTES:

1. THE LIMESTONE MAY BE HARD TO EXCAVATE AND DEWATER; SPECIAL EQUIPMENT AND TOOLS MAY BE REQUIRED.
2. BORING LOCATIONS (STATIONS AND OFFSETS) BASED ON 70% PRELIMINARY ENGINEERING ALIGNMENT. SEE BORING LOCATION PLANS FOR SPECIFIC COORDINATE DATA.

SK	05-06				
Designed by	Date				
SK/EP	05-06				
Drawn by	Date				
AK	05-06				
Checked by	Date				
Approved by	Date	No.	Date	By / Chk	App.	Revisions

NORTH CORRIDOR METRORAIL EXTENSION - PRELIMINARY ENGINEERING (100% SUBMITTAL)

MIAMI-DADE COUNTY — MIAMI-DADE TRANSIT

PARSONS
7600 CORPORATE CENTER DRIVE, SUITE 500
MIAMI, FLORIDA 33126
PHONE: (786) 464-1000 FAX: (786) 845-7119
CERTIFICATE OF AUTHORIZATION NO. 1838

HP CONSULTANTS INC.
License No. 9509
ARVIND KUMBHOJKAR, PH.D, P.E.
License No. 41067
10220 SW 107 Street
Miami, Fl 33176 Ph:(305)596-1585

Approved | Date | Approved | Date

GEOTECHNICAL

REPORT OF CORE BORINGS

Scale 1" = 16' | Drawing GE-022 | Sheet 4 of 4

5/4/2006 8:17:54 AM c:\HP\BORING_PROFILE\Rgeonc01.dgn

BORING No.: B-5
LOCATION: 112+26.784 (0.223' LT)
ELEVATION: 8.10
HAMMER: AUTOMATIC
TYPE OF RIG: CME 75
DATE: 05/15/05

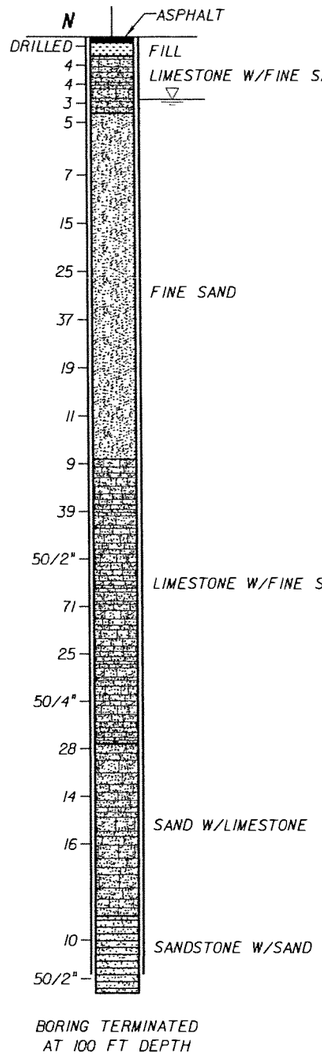

BORING TERMINATED AT 100 FT DEPTH

BORING No.: B-6
LOCATION: 115+02.318 (9.986' LT)
ELEVATION: 9.40
HAMMER: AUTOMATIC
TYPE OF RIG: CME 75
DATE: 05/16/05

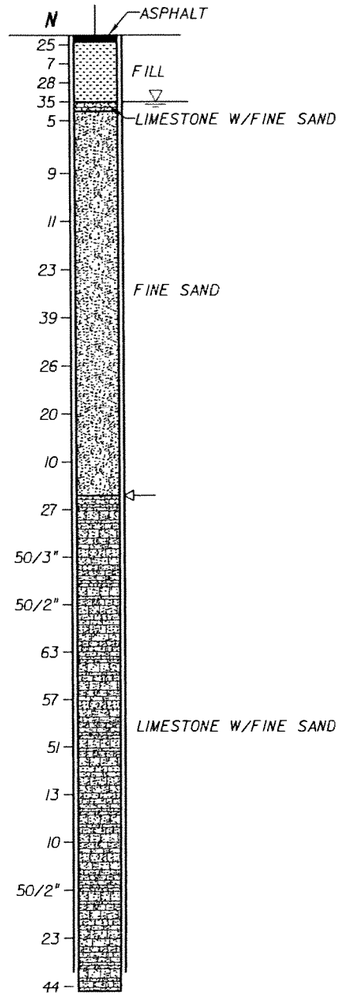

BORING TERMINATED AT 100 FT DEPTH

BORING No.: B-7
LOCATION: 117+73.264 (1.715' LT)
ELEVATION: 9.50
HAMMER: AUTOMATIC
TYPE OF RIG: CME 75
DATE: 05/16/05

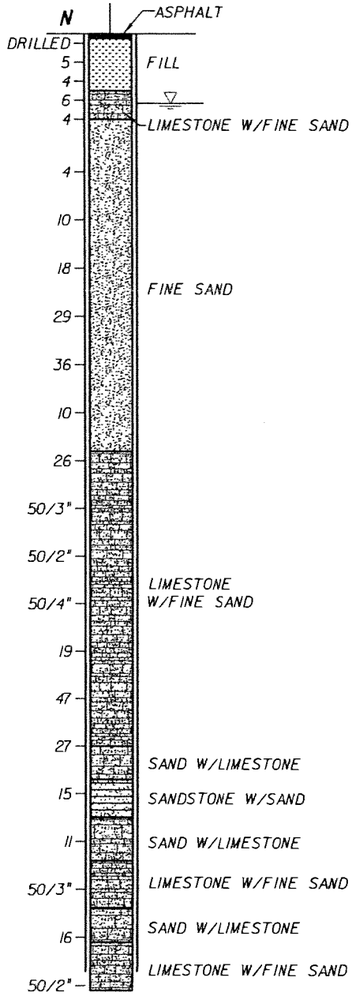

BORING TERMINATED AT 100 FT DEPTH

BORING No.: B-8
LOCATION: 120+93.698 (3.288' LT)
ELEVATION: 8.30
HAMMER: AUTOMATIC
TYPE OF RIG: CME 75
DATE: 05/24/05

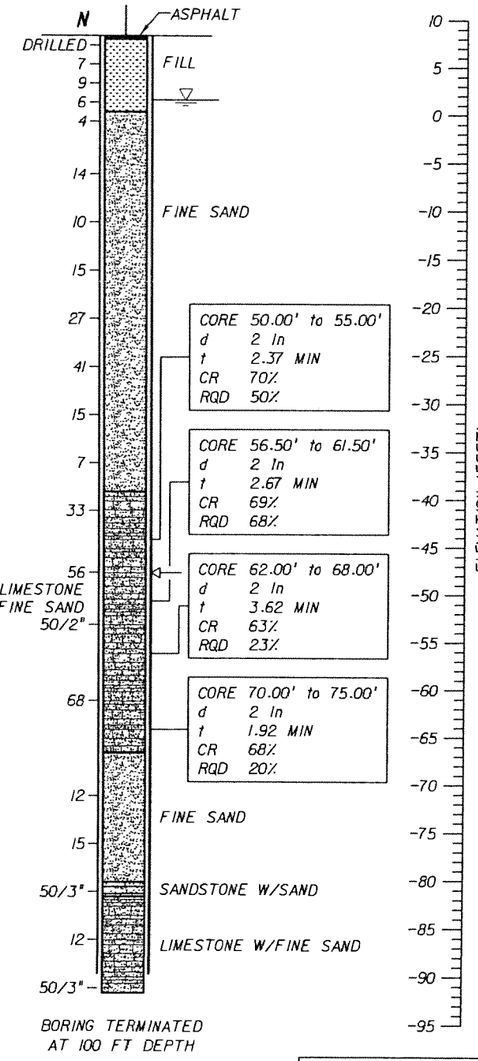

BORING TERMINATED AT 100 FT DEPTH

ELEVATION (FEET)

10 5 0 -5 -10 -15 -20 -25 -30 -35 -40 -45 -50 -55 -60 -65 -70 -75 -80 -85 -90 -95

LEGEND:

- ASPHALT PAVEMENT
- (TOPSOIL) BLACK/DARK BROWN/DARK GRAY TO GRAY, SILTY SAND WITH ROOTS, ORGANICS, AND OTHER MATERIALS
- (FILL) LIMEROCK FRAGMENTS, COARSE GRAVEL TO SILT SIZE, IN SHADES OF BROWN OR GRAY, OCCASIONALLY MIXED WITH TOP SOIL
- (FINE SAND) VERY LOOSE TO VERY DENSE, FINE-SAND-SIZE MATERIAL IN SHADES OF BROWN, GRAY, OR OTHERS COLORS, OCCASIONALLY ORGANIC STAINED
- (SILTY SAND) SILTY SAND-SIZE MATERIAL IN SHADES OF BROWN/GRAY/OTHER COLORS POSSIBLY DISINTEGRATED SEDIMETARY ROCK
- (LIMESTONE WITH FINE SAND) VUGGY, SEDIMENTARY ROCK MADE OF $CaCO_3$, WITH SAND-SIZE MATERIAL, IN SHADES OF BROWN/GRAY/OTHER COLORS, OCCASIONALLY WITH SANDSTONE AND SHELL FRAGMENTS
- (SAND WITH LIMESTONE) SAND-SIZE MATERIAL WITH LIMESTONE FRAGMENTS IN SHADES OF BROWN, GRAY, OR OTHER COLORS, SOMETIMES WITH SANDSTONE FRAGMENTS
- (ORGANICS) DARK GRAY TO BLACK, SILT TO FINE-SAND-SIZE MATERIAL HAVING ORGANIC CONTENT > 5%
- (SANDSTONE WITH SAND) SEDIMENTARY ROCK MADE OF SAND-SIZE MATERIAL IN $CaCO_3$ MATRIX, IN SHADES OF BROWN OR GRAY, WITH FINE-SAND-SIZE MATERIAL
- (SAND WITH SANDSTONE) SAND-SIZE MATERIAL WITH SANDSTONE FRAGMENTS IN SHADES OF BROWN/GRAY/OTHER COLORS
- (SANDY SILT) SANDY, SILT-SIZE MATERIAL IN SHADES OF BLACK/BROWN/GRAY, POSSIBLY DISINTEGRATED SEDIMETARY ROCK

NOTES:

- WATER TABLE AT THE TIME OF DRILLING
- N — NUMBERS TO THE LEFT OF BORINGS INDICATE SPT VALUE FOR 1 FOOT (12") PENETRATION (UNLESS OTHERWISE NOTED)
- d — DIAMETER
- t — TIME
- NA — NOT AVAILABLE
- CR — CORE RECOVERY
- RQD — ROCK QUALITY DESIGNATION
- γ — UNIT WEIGHT lb/cft
- q_u — UNCONFINED COMPRESSION AT SAMPLE DEPTH (tsf)
- q_{st} — SPLIT TENSILE STRENGTH AT SAMPLE DEPTH (tsf)
- ⟵ — LOSS OF CIRCULATION
- WOH — WEIGHT OT THE HAMMER
- CASING USED

NOTES:

1. THE LIMESTONE MAY BE HARD TO EXCAVATE AND DEWATER; SPECIAL EQUIPMENT AND TOOLS MAY BE REQUIRED.
2. BORING LOCATIONS (STATIONS AND OFFSETS) BASED ON 70% PRELIMINARY ENGINEERING ALIGNMENT. SEE BORING LOCATION PLANS FOR SPECIFIC COORDINATE DATA.

VERTICAL SCALE: 1"=16'

ENVIRONMENTAL CLASSIFICATION

SEE THE GEOTECHNICAL REPORT

RELATION OF RQD AND IN-SITU ROCK QUALITY

RQD (%)	ROCK QUALITY
90-100	EXCELLENT
75-90	GOOD
50-75	FAIR
25-50	POOR
0-25	VERY POOR

GRANULAR MATERIALS

RELATIVE DENSITY	SAFETY HAMMER SPT N-VALUE (BLOW/FOOT)	AUTOMATIC HAMMER SPT N-VALUE (BLOW/FOOT)
VERY LOOSE	LESS THAN 4	LESS THAN 3
LOOSE	4 - 10	3 - 7
MEDIUM DENSE	10 - 30	7 - 21
DENSE	30 - 50	21 - 35
VERY DENSE	GREATER THAN 50	GREATER THAN 35

SK	05-06				
Designed by	Date				
SK/EP	05-06				
Drawn by	Date				
AK	05-06				
Checked by	Date				
Approved by	Date	No.	Date	By / Chk	App.	Revisions

NORTH CORRIDOR METRORAIL EXTENSION - PRELIMINARY ENGINEERING (100% SUBMITTAL)

MIAMI-DADE COUNTY — MIAMI-DADE TRANSIT

PARSONS
7600 CORPORATE CENTER DRIVE, SUITE 500
MIAMI, FLORIDA 33126
PHONE: (786) 464-1000 FAX: (786) 845-7119
CERTIFICATE OF AUTHORIZATION NO. 1838
Approved | Date

HP CONSULTANTS INC.
License No. 9509
ARVIND KUMBHOJKAR, PH.D. P.E.
License No. 41067
10220 SW 107 Street
Miami, FL 33176 Ph:(305)596-1585
Approved | Date

GEOTECHNICAL

REPORT OF CORE BORINGS

Scale 1" = 16' | Drawing GE-023 | Sheet 415

5/4/2006 8:18:20 AM c:\HP\BORING_PROFILER\pconc01.dgn

BORING No.: B-9
LOCATION: 124+11.859 (3.123' LT)
ELEVATION: 7.40
HAMMER: AUTOMATIC
TYPE OF RIG: CME 75
DATE: 05/17/05

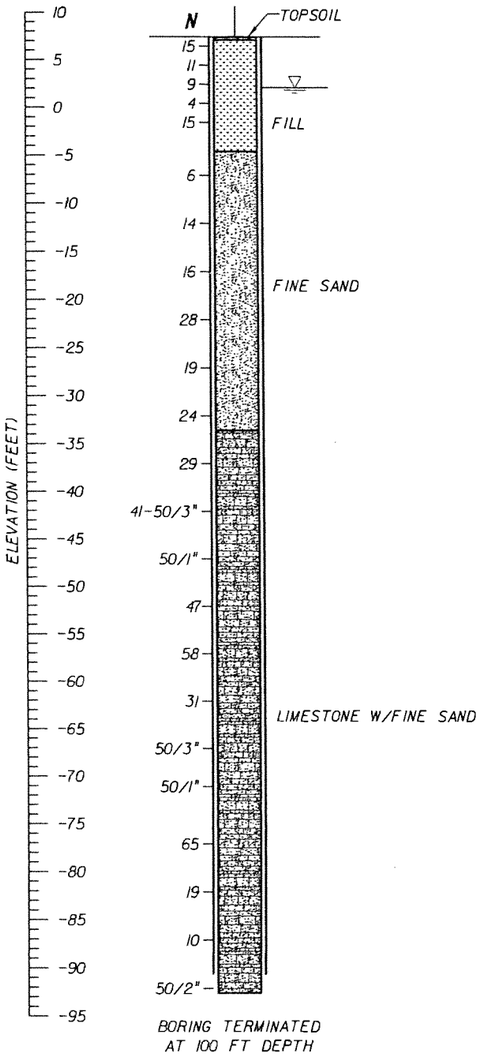

BORING TERMINATED AT 100 FT DEPTH

BORING No.: B-10
LOCATION: 122+49.180 (76.060' LT)
ELEVATION: 7.22
HAMMER: AUTOMATIC
TYPE OF RIG: CME 55
DATE: 06/27/05

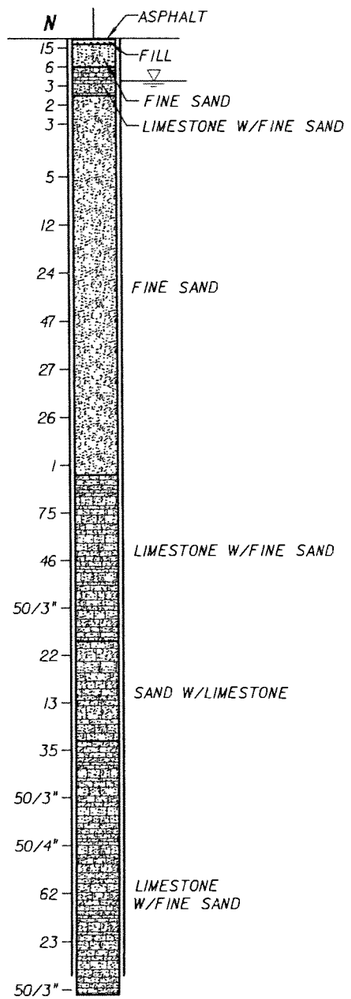

BORING TERMINATED AT 100 FT DEPTH

BORING No.: B-11
LOCATION: 123+07.321 (57.484' RT)
ELEVATION: 6.86
HAMMER: AUTOMATIC
TYPE OF RIG: CME 55
DATE: 06/26/05

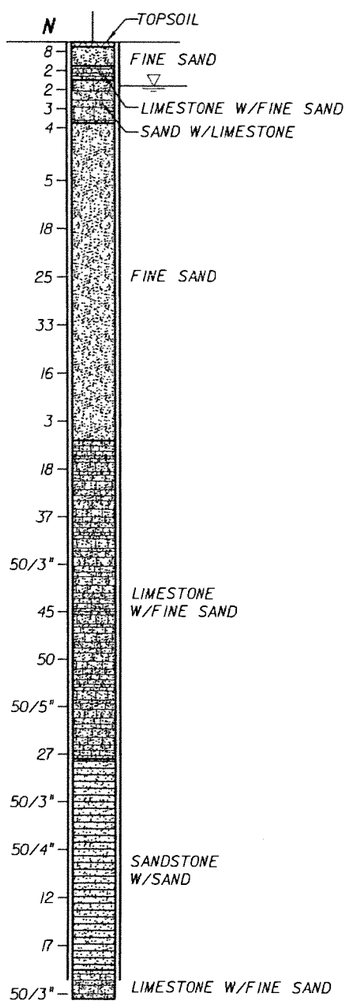

BORING TERMINATED AT 100 FT DEPTH

BORING No.: B-12
LOCATION: 126+88.134 (9.912' LT)
ELEVATION: 7.70
HAMMER: AUTOMATIC
TYPE OF RIG: CME 55
DATE: 05/22/05

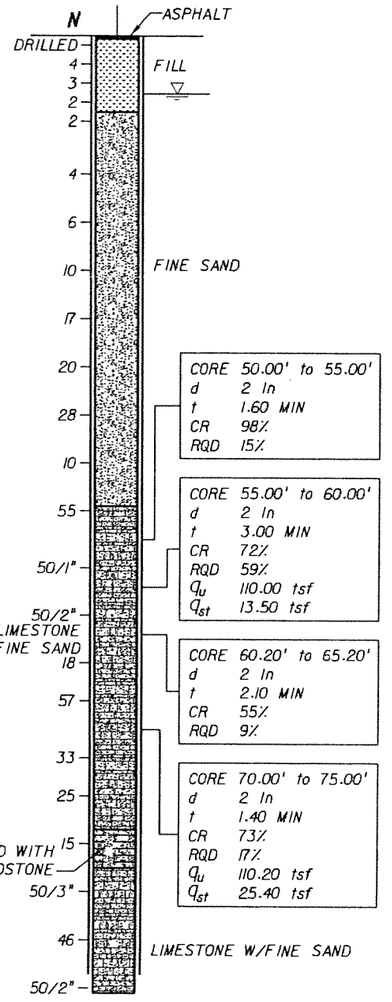

BORING TERMINATED AT 100 FT DEPTH

LEGEND:

- ASPHALT PAVEMENT
- (TOPSOIL) BLACK/DARK BROWN/DARK GRAY TO GRAY, SILTY SAND WITH ROOTS, ORGANICS, AND OTHER MATERIALS
- (FILL) LIMEROCK FRAGMENTS, COARSE GRAVEL TO SILT SIZE, IN SHADES OF BROWN OR GRAY, OCCASIONALLY MIXED WITH TOP SOIL
- (FINE SAND) VERY LOOSE TO VERY DENSE, FINE-SAND-SIZE MATERIAL IN SHADES OF BROWN, GRAY, OR OTHERS COLORS, OCCASIONALLY ORGANIC STAINED
- (SILTY SAND) SILTY SAND-SIZE MATERIAL IN SHADES OF BROWN/GRAY/OTHER COLORS POSSIBLY DISINTEGRATED SEDIMETARY ROCK
- (LIMESTONE WITH FINE SAND) VUGGY, SEDIMENTARY ROCK MADE OF $CaCO_3$, WITH SAND-SIZE MATERIAL, IN SHADES OF BROWN/GRAY/OTHER COLORS, OCCASIONALLY WITH SANDSTONE AND SHELL FRAGMENTS
- (SAND WITH LIMESTONE) SAND-SIZE MATERIAL WITH LIMESTONE FRAGMENTS IN SHADES OF BROWN, GRAY, OR OTHER COLORS, SOMETIMES WITH SANDSTONE FRAGMENTS
- (ORGANICS) DARK GRAY TO BLACK, SILT TO FINE-SAND-SIZE MATERIAL HAVING ORGANIC CONTENT > 5%
- (SANDSTONE WITH SAND) SEDIMENTARY ROCK MADE OF SAND-SIZE MATERIAL IN $CaCO_3$ MATRIX, IN SHADES OF BROWN OR GRAY, WITH FINE-SAND-SIZE MATERIAL
- (SAND WITH SANDSTONE) SAND-SIZE MATERIAL WITH SANDSTONE FRAGMENTS IN SHADES OF BROWN/GRAY/OTHER COLORS
- (SANDY SILT) SANDY, SILT-SIZE MATERIAL IN SHADES OF BLACK/BROWN/GRAY, POSSIBLY DISINTEGRATED SEDIMETARY ROCK

NOTES:

- ▽ WATER TABLE AT THE TIME OF DRILLING
- N NUMBERS TO THE LEFT OF BORINGS INDICATE SPT VALUE FOR 1 FOOT (12") PENETRATION (UNLESS OTHERWISE NOTED)
- d DIAMETER
- t TIME
- NA NOT AVAILABLE
- CR CORE RECOVERY
- RQD ROCK QUALITY DESIGNATION
- δ UNIT WEIGHT lb/cft
- q_u UNCONFINED COMPRESSION AT SAMPLE DEPTH (tsf)
- q_{st} SPLIT TENSILE STRENGTH AT SAMPLE DEPTH (tsf)
- ⇦ LOSS OF CIRCULATION
- WOH WEIGHT OT THE HAMMER
- CASING USED

NOTES:

1. THE LIMESTONE MAY BE HARD TO EXCAVATE AND DEWATER; SPECIAL EQUIPMENT AND TOOLS MAY BE REQUIRED.
2. BORING LOCATIONS (STATIONS AND OFFSETS) BASED ON 70% PRELIMINARY ENGINEERING ALIGNMENT. SEE BORING LOCATION PLANS FOR SPECIFIC COORDINATE DATA.

VERTICAL SCALE: 1"=16'

ENVIRONMENTAL CLASSIFICATION

SEE THE GEOTECHNICAL REPORT

RELATION OF RQD AND IN-SITU ROCK QUALITY	
RQD (%)	ROCK QUALITY
90-100	EXCELLENT
75-90	GOOD
50-75	FAIR
25-50	POOR
0-25	VERY POOR

GRANULAR MATERIALS

RELATIVE DENSITY	SAFETY HAMMER SPT N-VALUE (BLOW/FOOT)	AUTOMATIC HAMMER SPT N-VALUE (BLOW/FOOT)
VERY LOOSE	LESS THAN 4	LESS THAN 3
LOOSE	4 - 10	3 - 7
MEDIUM DENSE	10 - 30	7 - 21
DENSE	30 - 50	21 - 35
VERY DENSE	GREATER THAN 50	GREATER THAN 35

SK	05-06					
Designed by	Date					
SK/EP	05-06					
Drawn by	Date					
AK	05-06					
Checked by	Date					
Approved by	Date	No.	Date	By / Chk	App.	Revisions

NORTH CORRIDOR METRORAIL EXTENSION - PRELIMINARY ENGINEERING (100% SUBMITTAL)

MIAMI-DADE COUNTY
MIAMI-DADE TRANSIT

PARSONS
7600 CORPORATE CENTER DRIVE, SUITE 500
MIAMI, FLORIDA 33126
PHONE: (786) 464-1000 FAX: (786) 845-7119
CERTIFICATE OF AUTHORIZATION NO. 1638

HP CONSULTANTS INC.
License No. 9509
ARVIND KUMBHOJKAR, PH.D, P.E.
License No. 41067
10220 SW 107 Street
Miami, Fl 33176 Ph:(305)596-1585

Approved | Date

GEOTECHNICAL

REPORT OF CORE BORINGS

Scale: 1" = 16' | Drawing: GE-024 | Sheet: 4 of 6

5/3/2006 11:29:21 PM c:\HP\BORING_PROFILE\Rgeonc01.dgn

BORING No.: B-13
LOCATION: 130+01.020 (5.54' LT)
ELEVATION: 8.40
HAMMER: AUTOMATIC
TYPE OF RIG: CME 55
DATE: 05/17/05

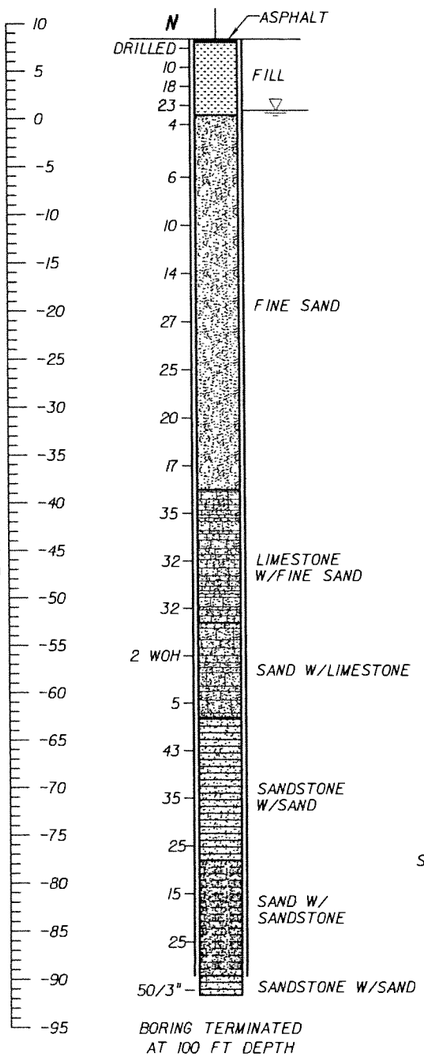

BORING TERMINATED AT 100 FT DEPTH

BORING No.: B-14
LOCATION: 133+27.858 (7.04' LT)
ELEVATION: 9.20
HAMMER: AUTOMATIC
TYPE OF RIG: CME 55
DATE: 06/18/05

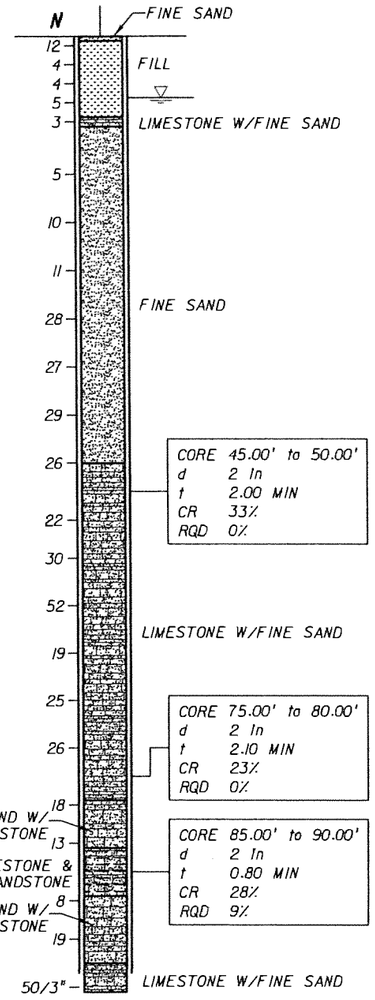

CORE 45.00' to 50.00'
d 2 In
t 2.00 MIN
CR 33%
RQD 0%

CORE 75.00' to 80.00'
d 2 In
t 2.10 MIN
CR 23%
RQD 0%

CORE 85.00' to 90.00'
d 2 In
t 0.80 MIN
CR 28%
RQD 9%

BORING TERMINATED AT 100 FT DEPTH

BORING No.: B-15
LOCATION: 135+97.805 (1.808' RT)
ELEVATION: 9.10
HAMMER: AUTOMATIC
TYPE OF RIG: CME 55
DATE: 05/18/05

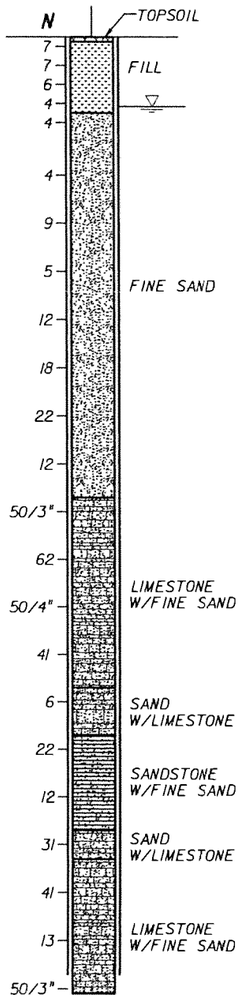

BORING TERMINATED AT 100 FT DEPTH

VERTICAL SCALE: 1"=16'

BORING No.: B-16
LOCATION: 139+17.75l (12.309' LT)
ELEVATION: 7.60
HAMMER: AUTOMATIC
TYPE OF RIG: CME 55
DATE: 05/21/05

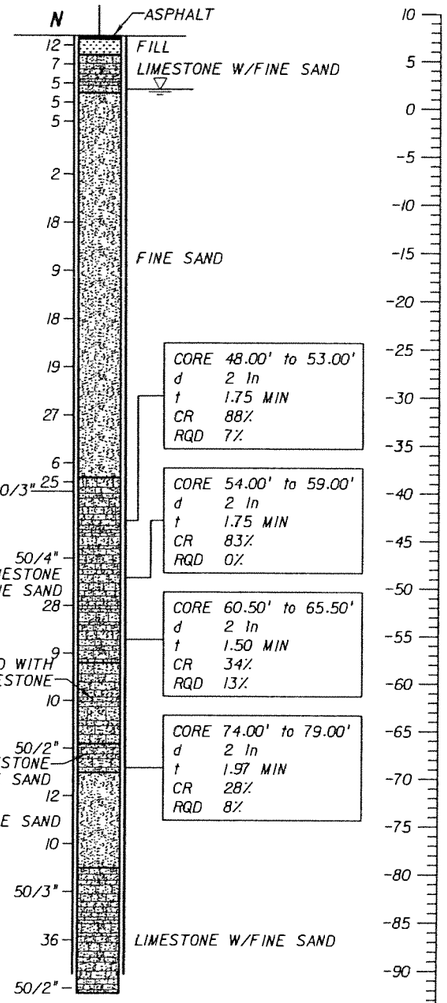

CORE 48.00' to 53.00'
d 2 In
t 1.75 MIN
CR 88%
RQD 7%

CORE 54.00' to 59.00'
d 2 In
t 1.75 MIN
CR 83%
RQD 0%

CORE 60.50' to 65.50'
d 2 In
t 1.50 MIN
CR 34%
RQD 13%

CORE 74.00' to 79.00'
d 2 In
t 1.97 MIN
CR 28%
RQD 8%

BORING TERMINATED AT 100 FT DEPTH

LEGEND:

- ASPHALT PAVEMENT
- (TOPSOIL) BLACK/DARK BROWN/DARK GRAY TO GRAY, SILTY SAND WITH ROOTS, ORGANICS, AND OTHER MATERIALS
- (FILL) LIMEROCK FRAGMENTS, COARSE GRAVEL TO SILT SIZE, IN SHADES OF BROWN OR GRAY, OCCASIONALLY MIXED WITH TOP SOIL
- (FINE SAND) VERY LOOSE TO VERY DENSE, FINE-SAND-SIZE MATERIAL IN SHADES OF BROWN, GRAY, OR OTHERS COLORS, OCCASIONALLY ORGANIC STAINED
- (SILTY SAND) SILTY SAND-SIZE MATERIAL IN SHADES OF BROWN/GRAY/OTHER COLORS POSSIBLY DISINTEGRATED SEDIMETARY ROCK
- (LIMESTONE WITH FINE SAND) VUGGY, SEDIMENTARY ROCK MADE OF $CaCO_3$, WITH SAND-SIZE MATERIAL, IN SHADES OF BROWN/GRAY/OTHER COLORS, OCCASIONALLY WITH SANDSTONE AND SHELL FRAGMENTS
- (SAND WITH LIMESTONE) SAND-SIZE MATERIAL WITH LIMESTONE FRAGMENTS IN SHADES OF BROWN, GRAY, OR OTHER COLORS, SOMETIMES WITH SANDSTONE FRAGMENTS
- (ORGANICS) DARK GRAY TO BLACK, SILT TO FINE-SAND-SIZE MATERIAL HAVING ORGANIC CONTENT> 5%
- (SANDSTONE WITH SAND) SEDIMENTARY ROCK MADE OF SAND-SIZE MATERIAL IN $CaCO_3$ MATRIX, IN SHADES OF BROWN OR GRAY, WITH FINE-SAND-SIZE MATERIAL
- (SAND WITH SANDSTONE) SAND-SIZE MATERIAL WITH SANDSTONE FRAGMENTS IN SHADES OF BROWN/GRAY/ OTHER COLORS
- (SANDY SILT) SANDY, SILT-SIZE MATERIAL IN SHADES OF BLACK/BROWN/GRAY, POSSIBLY DISINTEGRATED SEDIMETARY ROCK

NOTES:

- WATER TABLE AT THE TIME OF DRILLING
- N — NUMBERS TO THE LEFT OF BORINGS INDICATE SPT VALUE FOR 1 FOOT (12") PENETRATION (UNLESS OTHERWISE NOTED)
- d — DIAMETER
- t — TIME
- NA — NOT AVAILABLE
- CR — CORE RECOVERY
- RQD — ROCK QUALITY DESIGNATION
- γ — UNIT WEIGHT lb/cft
- q_u — UNCONFINED COMPRESSION AT SAMPLE DEPTH (tsf)
- q_{st} — SPLIT TENSILE STRENGTH AT SAMPLE DEPTH (tsf)
- ◁— LOSS OF CIRCULATION
- WOH — WEIGHT OT THE HAMMER
- CASING USED

NOTES:

1. THE LIMESTONE MAY BE HARD TO EXCAVATE AND DEWATER; SPECIAL EQUIPMENT AND TOOLS MAY BE REQUIRED.
2. BORING LOCATIONS (STATIONS AND OFFSETS) BASED ON 70% PRELIMINARY ENGINEERING ALIGNMENT. SEE BORING LOCATION PLANS FOR SPECIFIC COORDINATE DATA.

ENVIRONMENTAL CLASSIFICATION

SEE THE GEOTECHNICAL REPORT

RELATION OF RQD AND IN-SITU ROCK QUALITY	
RQD (%)	ROCK QUALITY
90-100	EXCELLENT
75-90	GOOD
50-75	FAIR
25-50	POOR
0-25	VERY POOR

GRANULAR MATERIALS

RELATIVE DENSITY	SAFETY HAMMER SPT N-VALUE (BLOW/FOOT)	AUTOMATIC HAMMER SPT N-VALUE (BLOW/FOOT)
VERY LOOSE	LESS THAN 4	LESS THAN 3
LOOSE	4 - 10	3 - 7
MEDIUM DENSE	10 - 30	7 - 21
DENSE	30 - 50	21 - 35
VERY DENSE	GREATER THAN 50	GREATER THAN 35

SK	05-06				
Designed by	Date				
SK/EP	05-06				
Drawn by	Date				
AK	05-06				
Checked by	Date				
Approved by	Date	No.	Date	By / Chk	App.	Revisions

NORTH CORRIDOR METRORAIL EXTENSION - PRELIMINARY ENGINEERING (100% SUBMITTAL)

GEOTECHNICAL

MIAMI-DADE COUNTY
MIAMI-DADE TRANSIT

PARSONS
7600 CORPORATE CENTER DRIVE, SUITE 500
MIAMI, FLORIDA 33126
PHONE: (786) 464-1000 FAX: (786) 845-7119
CERTIFICATE OF AUTHORIZATION NO. 1838
Approved Date

HP CONSULTANTS INC.
License No. 9509
ARVIND KUMBHOJKAR, PH.D, P.E.
License No. 41067
10220 SW 107 Street
Miami, Fl 33176 Ph:(305)596-1585
Approved Date

REPORT OF CORE BORINGS

Scale 1" = 16' | Drawing GE-025 | Sheet 4 of 7

5/3/2006 11:39:08 PM c:\HP\BORING_PROFILE\Rgeonc02.dgn

BORING No.: B-17
LOCATION: 141+99.550 (7.667' RT)
ELEVATION: 7.40
HAMMER: AUTOMATIC
TYPE OF RIG: CME 55
DATE: 05/19/05

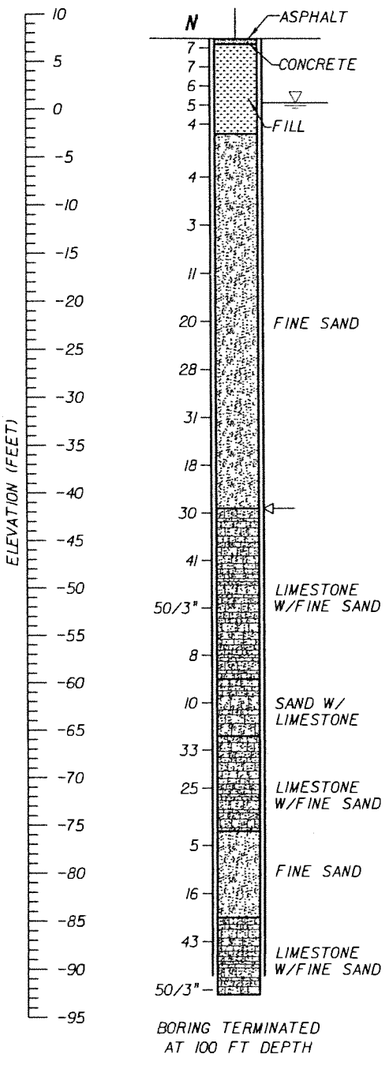

BORING TERMINATED AT 100 FT DEPTH

BORING No.: B-18
LOCATION: 145+04.618 (7.333' RT)
ELEVATION: 8.20
HAMMER: AUTOMATIC
TYPE OF RIG: CME 55
DATE: 05/23/05

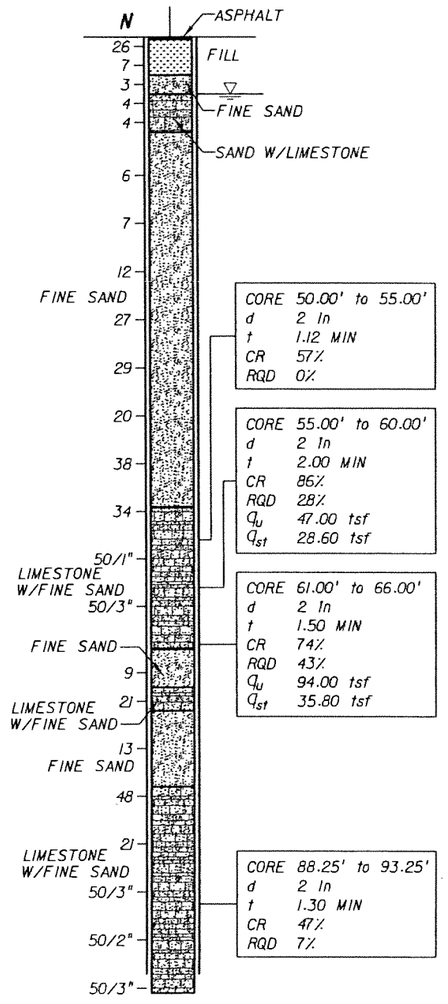

BORING TERMINATED AT 100 FT DEPTH

BORING No.: B-19
LOCATION: 147+76.521 (14.016' RT)
ELEVATION: 8.60
HAMMER: AUTOMATIC
TYPE OF RIG: CME 75
DATE: 07/07/05

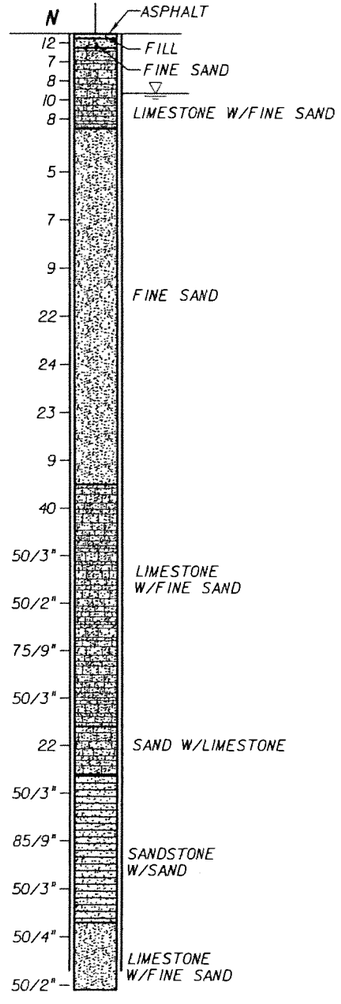

BORING TERMINATED AT 100 FT DEPTH

BORING No.: B-20
LOCATION: 150+78.240 (11.995' RT)
ELEVATION: 8.10
HAMMER: AUTOMATIC
TYPE OF RIG: CME 75
DATE: 07/08/05

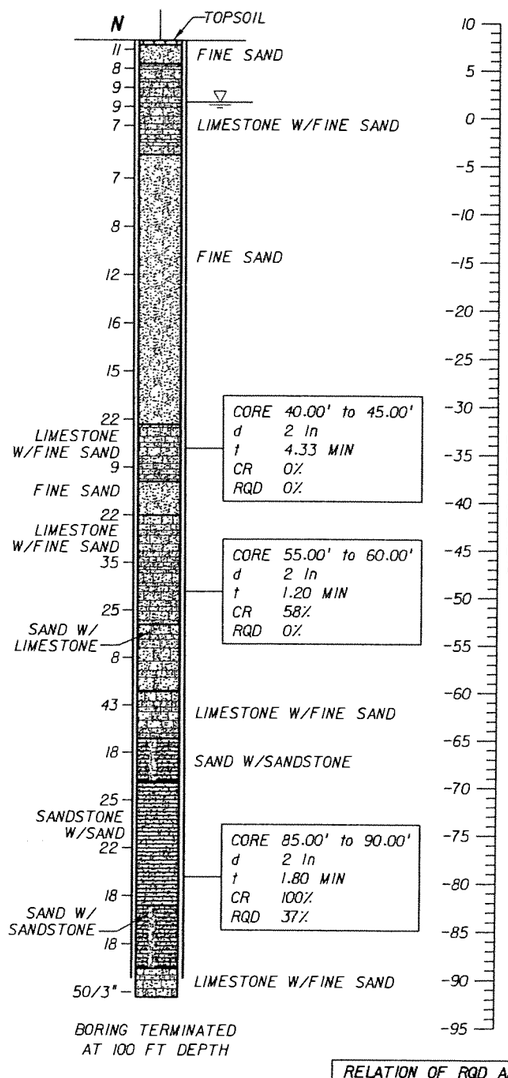

BORING TERMINATED AT 100 FT DEPTH

LEGEND:

- ASPHALT PAVEMENT
- (TOPSOIL) BLACK/DARK BROWN/DARK GRAY TO GRAY, SILTY SAND WITH ROOTS, ORGANICS, AND OTHER MATERIALS
- (FILL) LIMEROCK FRAGMENTS, COARSE GRAVEL TO SILT SIZE, IN SHADES OF BROWN OR GRAY, OCCASIONALLY MIXED WITH TOP SOIL
- (FINE SAND) VERY LOOSE TO VERY DENSE, FINE-SAND-SIZE MATERIAL IN SHADES OF BROWN, GRAY, OR OTHERS COLORS, OCCASIONALLY ORGANIC STAINED
- (SILTY SAND) SILTY SAND-SIZE MATERIAL IN SHADES OF BROWN/GRAY/OTHER COLORS POSSIBLY DISINTEGRATED SEDIMETARY ROCK
- (LIMESTONE WITH FINE SAND) VUGGY, SEDIMENTARY ROCK MADE OF $CaCO_3$, WITH SAND-SIZE MATERIAL, IN SHADES OF BROWN/GRAY/OTHER COLORS, OCCASIONALLY WITH SANDSTONE AND SHELL FRAGMENTS
- (SAND WITH LIMESTONE) SAND-SIZE MATERIAL WITH LIMESTONE FRAGMENTS IN SHADES OF BROWN, GRAY, OR OTHER COLORS, SOMETIMES WITH SANDSTONE FRAGMENTS
- (ORGANICS) DARK GRAY TO BLACK, SILT TO FINE-SAND-SIZE MATERIAL HAVING ORGANIC CONTENT > 5%
- (SANDSTONE WITH SAND) SEDIMENTARY ROCK MADE OF SAND-SIZE MATERIAL IN $CaCO_3$ MATRIX, IN SHADES OF BROWN OR GRAY, WITH FINE-SAND-SIZE MATERIAL
- (SAND WITH SANDSTONE) SAND-SIZE MATERIAL WITH SANDSTONE FRAGMENTS IN SHADES OF BROWN/GRAY/OTHER COLORS
- (SANDY SILT) SANDY, SILT-SIZE MATERIAL IN SHADES OF BLACK/BROWN/GRAY, POSSIBLY DISINTEGRATED SEDIMETARY ROCK

NOTES:

- WATER TABLE AT THE TIME OF DRILLING
- **N** NUMBERS TO THE LEFT OF BORINGS INDICATE SPT VALUE FOR 1 FOOT (12") PENETRATION (UNLESS OTHERWISE NOTED)
- d DIAMETER
- t TIME
- NA NOT AVAILABLE
- CR CORE RECOVERY
- RQD ROCK QUALITY DESIGNATION
- δ UNIT WEIGHT lb/cft
- q_u UNCONFINED COMPRESSION AT SAMPLE DEPTH (tsf)
- q_{st} SPLIT TENSILE STRENGTH AT SAMPLE DEPTH (tsf)
- ⇦ LOSS OF CIRCULATION
- WOH WEIGHT OT THE HAMMER
- CASING USED

NOTES:

1. THE LIMESTONE MAY BE HARD TO EXCAVATE AND DEWATER; SPECIAL EQUIPMENT AND TOOLS MAY BE REQUIRED.
2. BORING LOCATIONS (STATIONS AND OFFSETS) BASED ON 70% PRELIMINARY ENGINEERING ALIGNMENT. SEE BORING LOCATION PLANS FOR SPECIFIC COORDINATE DATA.

VERTICAL SCALE: 1"=16'

ENVIRONMENTAL CLASSIFICATION

SEE THE GEOTECHNICAL REPORT

RELATION OF RQD AND IN-SITU ROCK QUALITY

RQD (%)	ROCK QUALITY
90-100	EXCELLENT
75-90	GOOD
50-75	FAIR
25-50	POOR
0-25	VERY POOR

GRANULAR MATERIALS

RELATIVE DENSITY	SAFETY HAMMER SPT N-VALUE (BLOW/FOOT)	AUTOMATIC HAMMER SPT N-VALUE (BLOW/FOOT)
VERY LOOSE	LESS THAN 4	LESS THAN 3
LOOSE	4 - 10	3 - 7
MEDIUM DENSE	10 - 30	7 - 21
DENSE	30 - 50	21 - 35
VERY DENSE	GREATER THAN 50	GREATER THAN 35

SK	05-06				
Designed by	Date				
SK/EP	05-06				
Drawn by	Date				
AK	05-06				
Checked by	Date				
Approved by	Date	No.	Date	By / Chk	App. Revisions

NORTH CORRIDOR METRORAIL EXTENSION - PRELIMINARY ENGINEERING (100% SUBMITTAL)

MIAMI-DADE COUNTY
MIAMI-DADE TRANSIT

PARSONS
7600 CORPORATE CENTER DRIVE, SUITE 500
MIAMI, FLORIDA 33126
PHONE: (786) 464-1000 FAX: (786) 845-7119
CERTIFICATE OF AUTHORIZATION NO. 1838
Approved Date

HP CONSULTANTS INC.
License No. 9509
ARVIND KUMBHOJKAR, PH.D, P.E.
License No. 41067
10220 SW 107 Street
Miami, Fl 33176 Ph:(305)596-1585
Approved Date

GEOTECHNICAL

REPORT OF CORE BORINGS

Scale 1" = 16' | Drawing GE-026 | Sheet 418

5/3/2006 11:39:41 PM c:\HP\BORING_PROFILE\Rgeocd02.dgn

BORING No.: B-21
LOCATION: 153+87.063 (12.823' RT)
ELEVATION: 7.40
HAMMER: AUTOMATIC
TYPE OF RIG: CME 75
DATE: 05/24/05

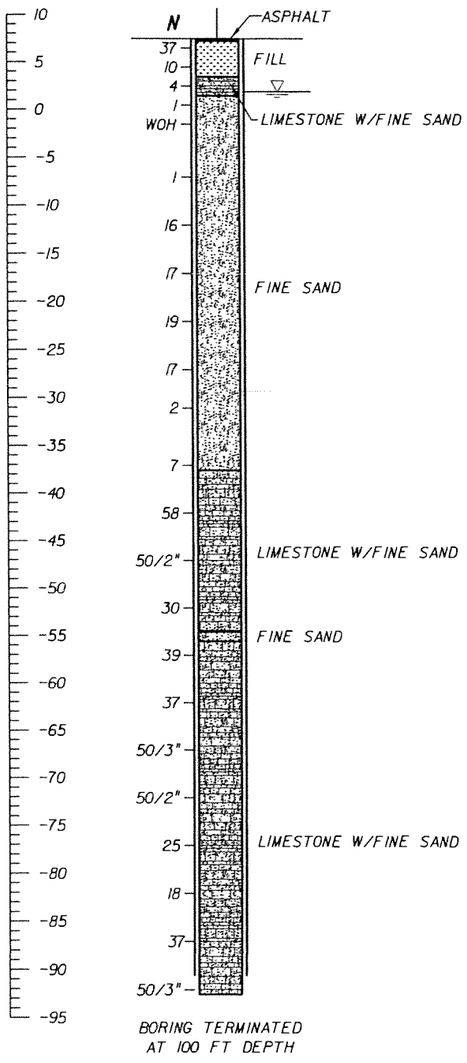

BORING TERMINATED AT 100 FT DEPTH

BORING No.: B-22
LOCATION: 157+00.305 (14.066' RT)
ELEVATION: 7.80
HAMMER: AUTOMATIC
TYPE OF RIG: CME 55
DATE: 06/28/05

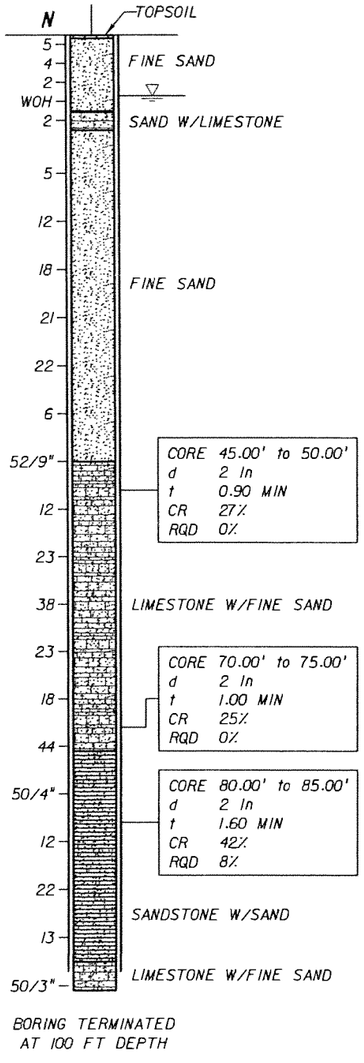

BORING TERMINATED AT 100 FT DEPTH

BORING No.: B-23
LOCATION: 160+45.661 (15.134' RT)
ELEVATION: 7.80
HAMMER: AUTOMATIC
TYPE OF RIG: CME 55
DATE: 05/24/05

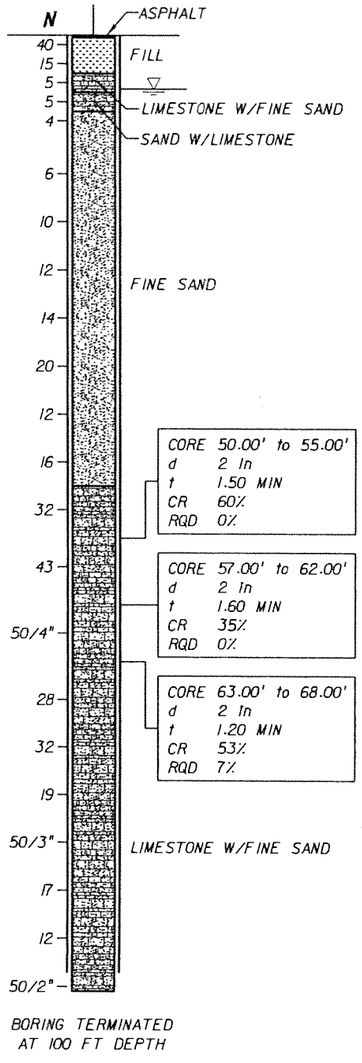

BORING TERMINATED AT 100 FT DEPTH

BORING No.: B-24
LOCATION: 163+57.739 (13.540' RT)
ELEVATION: 8.10
HAMMER: AUTOMATIC
TYPE OF RIG: CME 55
DATE: 06/29/05

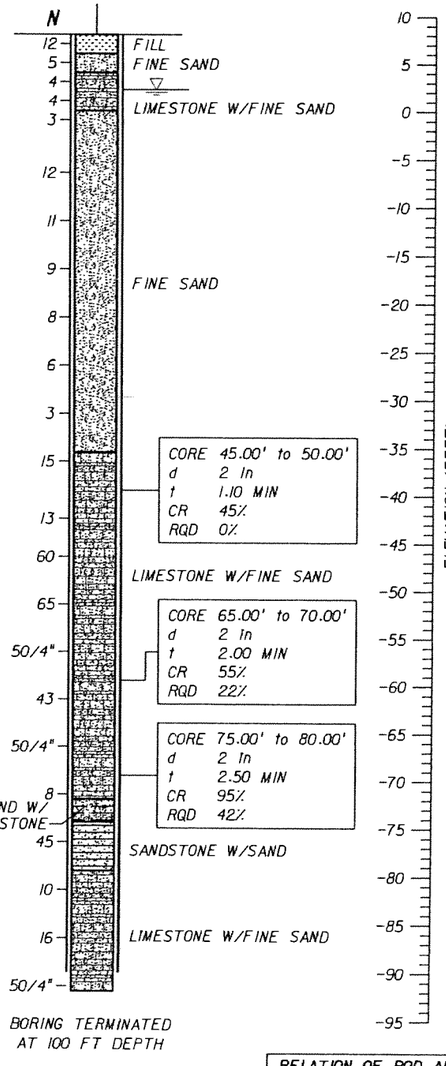

BORING TERMINATED AT 100 FT DEPTH

LEGEND:

- ASPHALT PAVEMENT
- (TOPSOIL) BLACK/DARK BROWN/DARK GRAY TO GRAY, SILTY SAND WITH ROOTS, ORGANICS, AND OTHER MATERIALS
- (FILL) LIMEROCK FRAGMENTS, COARSE GRAVEL TO SILT SIZE, IN SHADES OF BROWN OR GRAY, OCCASIONALLY MIXED WITH TOP SOIL
- (FINE SAND) VERY LOOSE TO VERY DENSE, FINE-SAND-SIZE MATERIAL IN SHADES OF BROWN, GRAY, OR OTHERS COLORS, OCCASIONALLY ORGANIC STAINED
- (SILTY SAND) SILTY SAND-SIZE MATERIAL IN SHADES OF BROWN/GRAY/OTHER COLORS POSSIBLY DISINTEGRATED SEDIMETARY ROCK
- (LIMESTONE WITH FINE SAND) VUGGY, SEDIMENTARY ROCK MADE OF $CaCO_3$, WITH SAND-SIZE MATERIAL, IN SHADES OF BROWN/GRAY/OTHER COLORS, OCCASIONALLY WITH SANDSTONE AND SHELL FRAGMENTS
- (SAND WITH LIMESTONE) SAND-SIZE MATERIAL WITH LIMESTONE FRAGMENTS IN SHADES OF BROWN, GRAY, OR OTHER COLORS, SOMETIMES WITH SANDSTONE FRAGMENTS
- (ORGANICS) DARK GRAY TO BLACK, SILT TO FINE-SAND-SIZE MATERIAL HAVING ORGANIC CONTENT > 5%
- (SANDSTONE WITH SAND) SEDIMENTARY ROCK MADE OF SAND-SIZE MATERIAL IN $CaCO_3$ MATRIX, IN SHADES OF BROWN OR GRAY, WITH FINE-SAND-SIZE MATERIAL
- (SAND WITH SANDSTONE) SAND-SIZE MATERIAL WITH SANDSTONE FRAGMENTS IN SHADES OF BROWN/GRAY/OTHER COLORS
- (SANDY SILT) SANDY, SILT-SIZE MATERIAL IN SHADES OF BLACK/BROWN/GRAY, POSSIBLY DISINTEGRATED SEDIMETARY ROCK

NOTES:

- ▽ WATER TABLE AT THE TIME OF DRILLING
- N NUMBERS TO THE LEFT OF BORINGS INDICATE SPT VALUE FOR 1 FOOT (12") PENETRATION (UNLESS OTHERWISE NOTED)
- d DIAMETER
- t TIME
- NA NOT AVAILABLE
- CR CORE RECOVERY
- RQD ROCK QUALITY DESIGNATION
- δ UNIT WEIGHT lb/cft
- q_u UNCONFINED COMPRESSION AT SAMPLE DEPTH (tsf)
- q_{st} SPLIT TENSILE STRENGTH AT SAMPLE DEPTH (tsf)
- ⟵ LOSS OF CIRCULATION
- WOH WEIGHT OT THE HAMMER
- CASING USED

GRANULAR MATERIALS

RELATIVE DENSITY	SAFETY HAMMER SPT N-VALUE (BLOW/FOOT)	AUTOMATIC HAMMER SPT N-VALUE (BLOW/FOOT)
VERY LOOSE	LESS THAN 4	LESS THAN 3
LOOSE	4 - 10	3 - 7
MEDIUM DENSE	10 - 30	7 - 21
DENSE	30 - 50	21 - 35
VERY DENSE	GREATER THAN 50	GREATER THAN 35

RELATION OF RQD AND IN-SITU ROCK QUALITY

RQD (%)	ROCK QUALITY
90-100	EXCELLENT
75-90	GOOD
50-75	FAIR
25-50	POOR
0-25	VERY POOR

NOTES:

1. THE LIMESTONE MAY BE HARD TO EXCAVATE AND DEWATER; SPECIAL EQUIPMENT AND TOOLS MAY BE REQUIRED.
2. BORING LOCATIONS (STATIONS AND OFFSETS) BASED ON 70% PRELIMINARY ENGINEERING ALIGNMENT. SEE BORING LOCATION PLANS FOR SPECIFIC COORDINATE DATA.

VERTICAL SCALE: 1"=16'

ENVIRONMENTAL CLASSIFICATION

SEE THE GEOTECHNICAL REPORT

SK Designed by	05-06 Date				
SK/EP Drawn by	05-06 Date				
AK Checked by	05-06 Date				
Approved by	Date	No.	Date	By / Chk	App. Revisions

NORTH CORRIDOR METRORAIL EXTENSION - PRELIMINARY ENGINEERING (100% SUBMITTAL)

MIAMI-DADE COUNTY — MIAMI-DADE TRANSIT

PARSONS
7600 CORPORATE CENTER DRIVE, SUITE 500
MIAMI, FLORIDA 33126
PHONE: (786) 464-1000 FAX: (786) 845-7119
CERTIFICATE OF AUTHORIZATION NO. 1838

Approved Date

HP CONSULTANTS INC.
License No. 9509
ARVIND KUMBHOJKAR, PH.D. P.E.
License No. 41067
10220 SW 107 Street
Miami, Fl 33176 Ph:(305)596-1585

Approved Date

GEOTECHNICAL

REPORT OF CORE BORINGS

Scale 1" = 16' | Drawing GE-027 | Sheet 4 of 9

5/3/2006 11:40:16 PM c:\HP\BORING_PROFILER\geonc02.dgn

BORING No.: B-25

LOCATION: 166+07.651 (5.200' LT)
ELEVATION: 9.10
HAMMER: AUTOMATIC
TYPE OF RIG: CME 55
DATE: 05/25/05

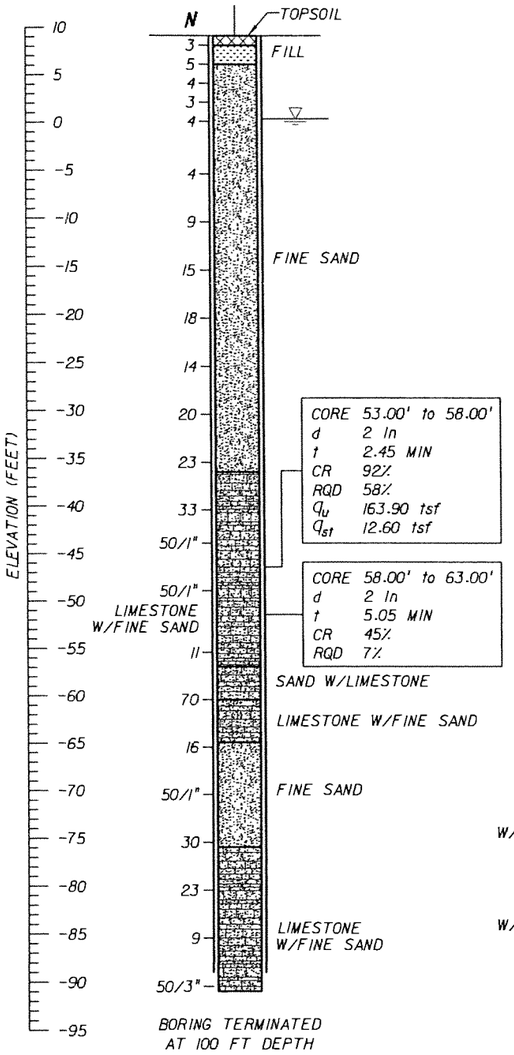

BORING TERMINATED AT 100 FT DEPTH

BORING No.: B-26

LOCATION: 168+90.195 (4.931' LT)
ELEVATION: 8.50
HAMMER: AUTOMATIC
TYPE OF RIG: CME 55
DATE: 05/26/05

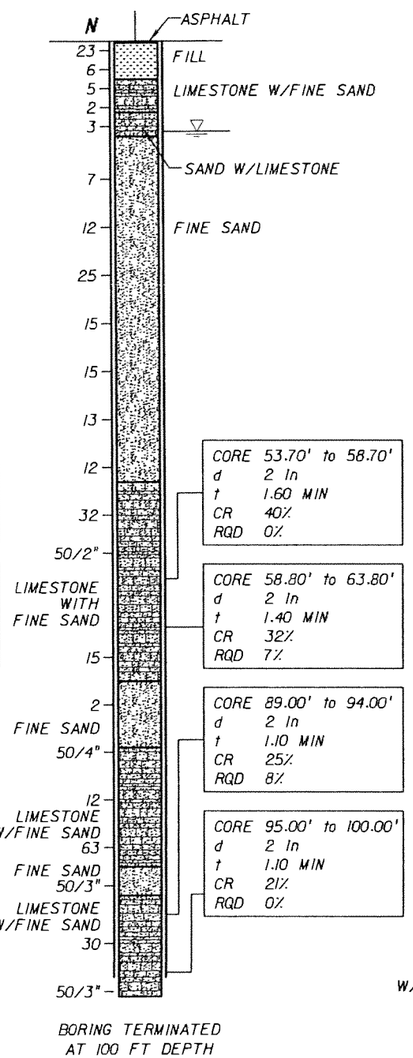

BORING TERMINATED AT 100 FT DEPTH

BORING No.: B-27

LOCATION: 171+83.753 (8.173' LT)
ELEVATION: 9.00
HAMMER: AUTOMATIC
TYPE OF RIG: CME 55
DATE: 05/27/05

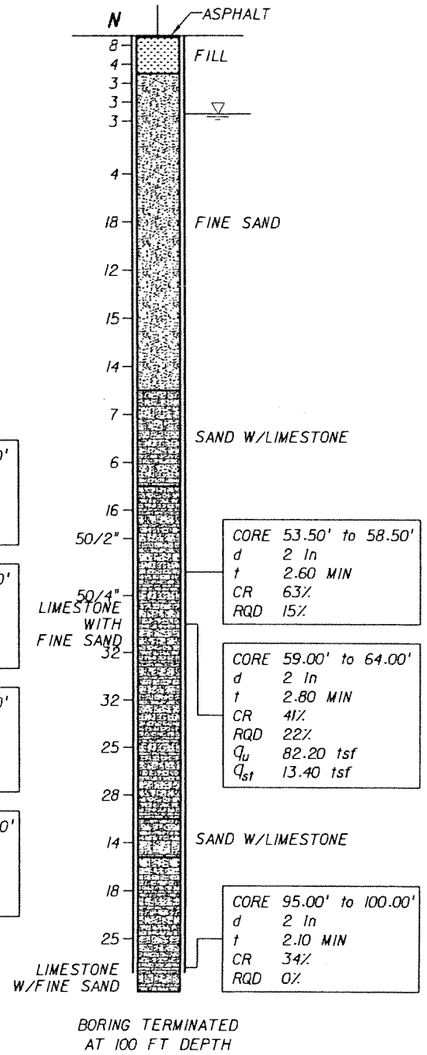

BORING TERMINATED AT 100 FT DEPTH

BORING No.: B-28

LOCATION: 174+90.698 (14.444' RT)
ELEVATION: 8.10
HAMMER: AUTOMATIC
TYPE OF RIG: CME 55
DATE: 07/09/05

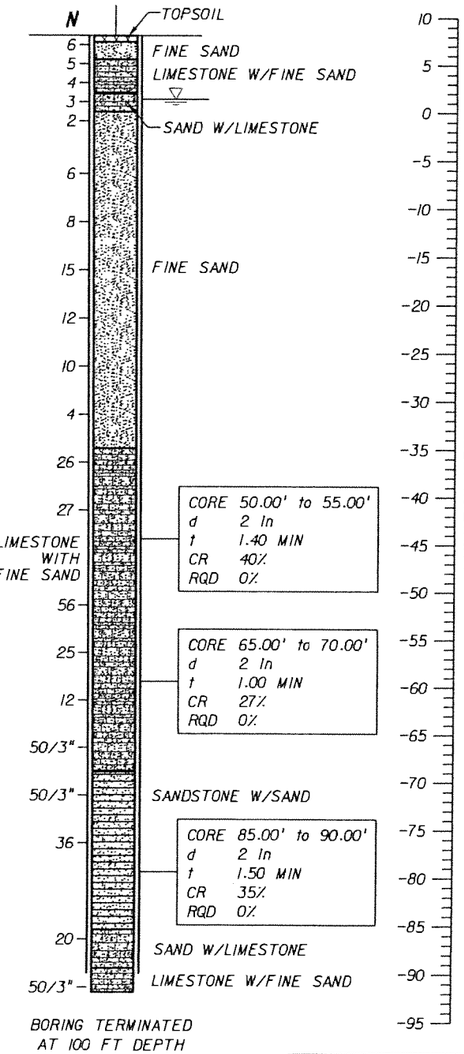

BORING TERMINATED AT 100 FT DEPTH

LEGEND:

- ASPHALT PAVEMENT
- (TOPSOIL) BLACK/DARK BROWN/DARK GRAY TO GRAY, SILTY SAND WITH ROOTS, ORGANICS, AND OTHER MATERIALS
- (FILL) LIMEROCK FRAGMENTS, COARSE GRAVEL TO SILT SIZE, IN SHADES OF BROWN OR GRAY, OCCASIONALLY MIXED WITH TOP SOIL
- (FINE SAND) VERY LOOSE TO VERY DENSE, FINE-SAND-SIZE MATERIAL IN SHADES OF BROWN, GRAY, OR OTHERS COLORS, OCCASIONALLY ORGANIC STAINED
- (SILTY SAND) SILTY SAND-SIZE MATERIAL IN SHADES OF BROWN/GRAY/OTHER COLORS POSSIBLY DISINTEGRATED SEDIMETARY ROCK
- (LIMESTONE WITH FINE SAND) VUGGY, SEDIMENTARY ROCK MADE OF $CaCO_3$, WITH SAND-SIZE MATERIAL, IN SHADES OF BROWN/GRAY/OTHER COLORS, OCCASIONALLY WITH SANDSTONE AND SHELL FRAGMENTS
- (SAND WITH LIMESTONE) SAND-SIZE MATERIAL WITH LIMESTONE FRAGMENTS IN SHADES OF BROWN, GRAY, OR OTHER COLORS, SOMETIMES WITH SANDSTONE FRAGMENTS
- (ORGANICS) DARK GRAY TO BLACK, SILT TO FINE-SAND-SIZE MATERIAL HAVING ORGANIC CONTENT> 5%
- (SANDSTONE WITH SAND) SEDIMENTARY ROCK MADE OF SAND-SIZE MATERIAL IN $CaCO_3$ MATRIX, IN SHADES OF BROWN OR GRAY, WITH FINE-SAND-SIZE MATERIAL
- (SAND WITH SANDSTONE) SAND-SIZE MATERIAL WITH SANDSTONE FRAGMENTS IN SHADES OF BROWN/GRAY/ OTHER COLORS
- (SANDY SILT) SANDY, SILT-SIZE MATERIAL IN SHADES OF BLACK/BROWN/GRAY, POSSIBLY DISINTEGRATED SEDIMETARY ROCK

NOTES:

- WATER TABLE AT THE TIME OF DRILLING
- N — NUMBERS TO THE LEFT OF BORINGS INDICATE SPT VALUE FOR 1 FOOT (12") PENETRATION (UNLESS OTHERWISE NOTED)
- d — DIAMETER
- t — TIME
- NA — NOT AVAILABLE
- CR — CORE RECOVERY
- RQD — ROCK QUALITY DESIGNATION
- γ — UNIT WEIGHT lb/cft
- q_u — UNCONFINED COMPRESSION AT SAMPLE DEPTH (tsf)
- q_{st} — SPLIT TENSILE STRENGTH AT SAMPLE DEPTH (tsf)
- ⇦ — LOSS OF CIRCULATION
- WOH — WEIGHT OT THE HAMMER
- CASING USED

NOTES:

1. THE LIMESTONE MAY BE HARD TO EXCAVATE AND DEWATER; SPECIAL EQUIPMENT AND TOOLS MAY BE REQUIRED.
2. BORING LOCATIONS (STATIONS AND OFFSETS) BASED ON 70% PRELIMINARY ENGINEERING ALIGNMENT. SEE BORING LOCATION PLANS FOR SPECIFIC COORDINATE DATA.

VERTICAL SCALE: 1"=16'

ENVIRONMENTAL CLASSIFICATION

SEE THE GEOTECHNICAL REPORT

RELATION OF RQD AND IN-SITU ROCK QUALITY	
RQD (%)	ROCK QUALITY
90-100	EXCELLENT
75-90	GOOD
50-75	FAIR
25-50	POOR
0-25	VERY POOR

GRANULAR MATERIALS

RELATIVE DENSITY	SAFETY HAMMER SPT N-VALUE (BLOW/FOOT)	AUTOMATIC HAMMER SPT N-VALUE (BLOW/FOOT)
VERY LOOSE	LESS THAN 4	LESS THAN 3
LOOSE	4 - 10	3 - 7
MEDIUM DENSE	10 - 30	7 - 21
DENSE	30 - 50	21 - 35
VERY DENSE	GREATER THAN 50	GREATER THAN 35

SK	05-06				
Designed by	Date				
SK/EP	05-06				
Drawn by	Date				
AK	05-06				
Checked by	Date				
Approved by	Date	No.	Date	By / Chk	App.	Revisions

NORTH CORRIDOR METRORAIL EXTENSION - PRELIMINARY ENGINEERING (100% SUBMITTAL)

MIAMI-DADE COUNTY — MIAMI-DADE TRANSIT

PARSONS
7600 CORPORATE CENTER DRIVE, SUITE 500
MIAMI, FLORIDA 33126
PHONE: (786) 464-1000 FAX: (786) 845-7119
CERTIFICATE OF AUTHORIZATION NO. 1838

Approved / Date

HP CONSULTANTS INC.
License No. 9509
ARVIND KUMBHOJKAR, PH.D, P.E.
License No. 41067
10220 SW 107 Street
Miami, Fl 33176 Ph:(305)596-1585

Approved / Date

GEOTECHNICAL

REPORT OF CORE BORINGS

Scale 1" = 16' | Drawing GE-028 | Sheet 420

5/3/2006 11:47:00 PM c:\HP\BORING_PROFILE\Rgeonc03.dgn

BORING No.: B-29
LOCATION: 178+02.300 (10.884' RT)
ELEVATION: 8.00
HAMMER: AUTOMATIC
TYPE OF RIG: CME 55
DATE: 05/29/05

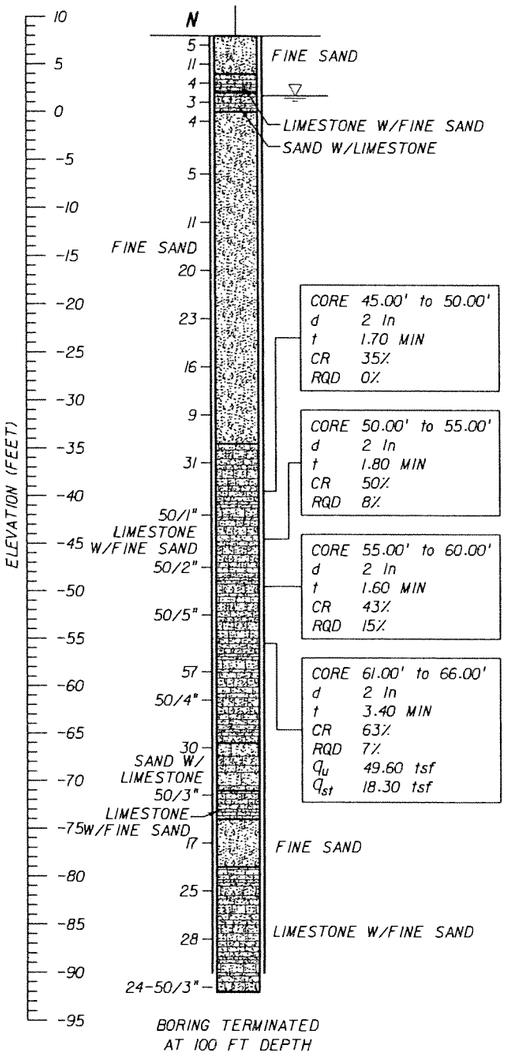

BORING TERMINATED AT 100 FT DEPTH

BORING No.: B-30
LOCATION: 181+08.989 (14.819' RT)
ELEVATION: 7.00
HAMMER: AUTOMATIC
TYPE OF RIG: CME 75
DATE: 05/28/05

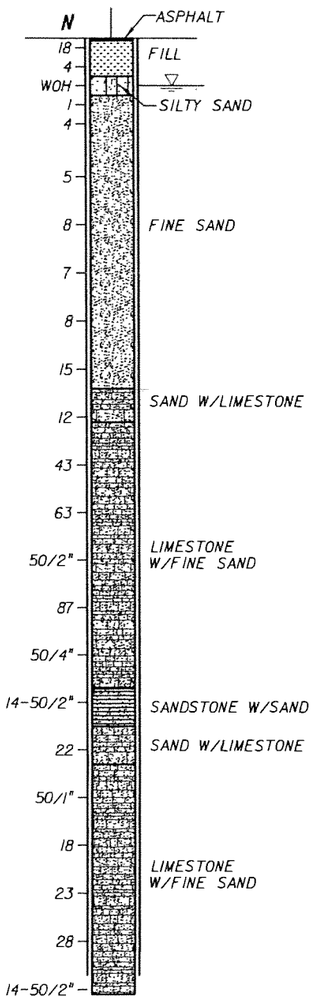

BORING TERMINATED AT 100 FT DEPTH

BORING No.: B-31
LOCATION: 184+02.745 (15.526' RT)
ELEVATION: 7.40
HAMMER: AUTOMATIC
TYPE OF RIG: CME 55
DATE: 05/28/05

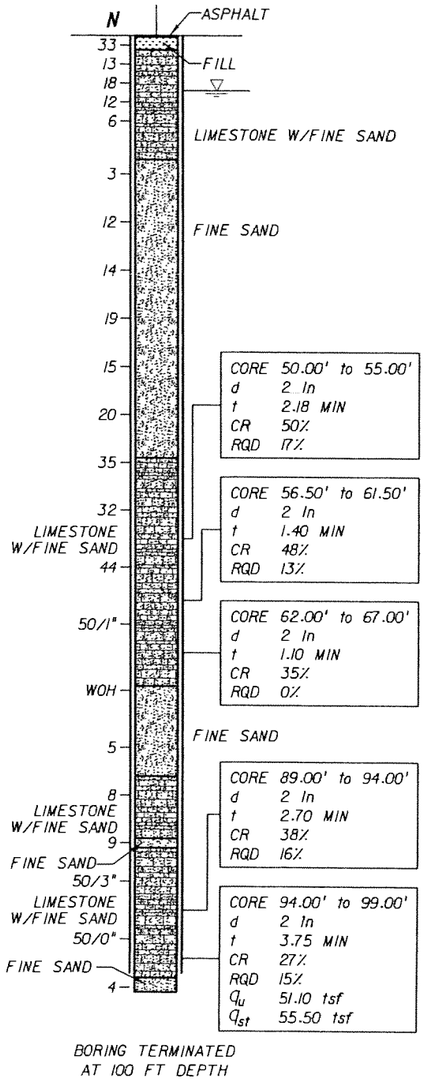

BORING TERMINATED AT 100 FT DEPTH

BORING No.: B-32
LOCATION: 187+53.196 (31.554' LT)
ELEVATION: 8.40
HAMMER: AUTOMATIC
TYPE OF RIG: CME 75
DATE: 05/14/0529

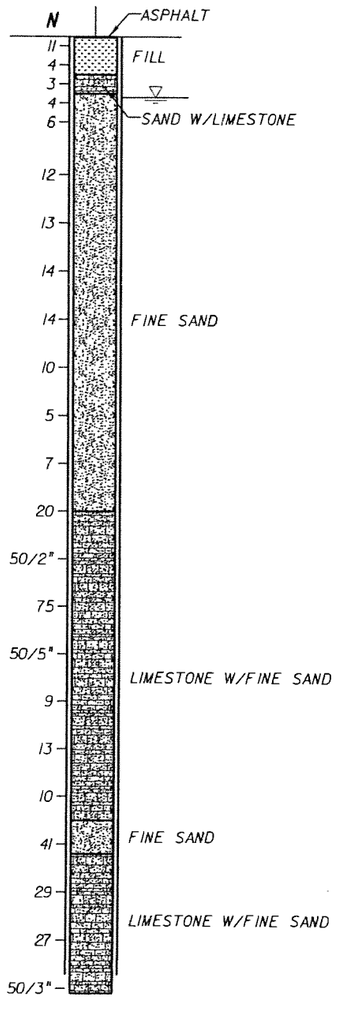

BORING TERMINATED AT 100 FT DEPTH

VERTICAL SCALE: 1"=16'

LEGEND:

- ASPHALT PAVEMENT
- (TOPSOIL) BLACK/DARK BROWN/DARK GRAY TO GRAY, SILTY SAND WITH ROOTS, ORGANICS, AND OTHER MATERIALS
- (FILL) LIMEROCK FRAGMENTS, COARSE GRAVEL TO SILT SIZE, IN SHADES OF BROWN OR GRAY, OCCASIONALLY MIXED WITH TOP SOIL
- (FINE SAND) VERY LOOSE TO VERY DENSE, FINE-SAND-SIZE MATERIAL IN SHADES OF BROWN, GRAY, OR OTHERS COLORS, OCCASIONALLY ORGANIC STAINED
- (SILTY SAND) SILTY SAND-SIZE MATERIAL IN SHADES OF BROWN/GRAY/OTHER COLORS POSSIBLY DISINTEGRATED SEDIMETARY ROCK
- (LIMESTONE WITH FINE SAND) VUGGY, SEDIMENTARY ROCK MADE OF $CaCO_3$, WITH SAND-SIZE MATERIAL, IN SHADES OF BROWN/GRAY/OTHER COLORS, OCCASIONALLY WITH SANDSTONE AND SHELL FRAGMENTS
- (SAND WITH LIMESTONE) SAND-SIZE MATERIAL WITH LIMESTONE FRAGMENTS IN SHADES OF BROWN, GRAY, OR OTHER COLORS, SOMETIMES WITH SANDSTONE FRAGMENTS
- (ORGANICS) DARK GRAY TO BLACK, SILT TO FINE-SAND-SIZE MATERIAL HAVING ORGANIC CONTENT> 5%
- (SANDSTONE WITH SAND) SEDIMENTARY ROCK MADE OF SAND-SIZE MATERIAL IN $CaCO_3$ MATRIX, IN SHADES OF BROWN OR GRAY, WITH FINE-SAND-SIZE MATERIAL
- (SAND WITH SANDSTONE) SAND-SIZE MATERIAL WITH SANDSTONE FRAGMENTS IN SHADES OF BROWN/GRAY/ OTHER COLORS
- (SANDY SILT) SANDY, SILT-SIZE MATERIAL IN SHADES OF BLACK/BROWN/GRAY, POSSIBLY DISINTEGRATED SEDIMETARY ROCK

NOTES:

- ▽ WATER TABLE AT THE TIME OF DRILLING
- N NUMBERS TO THE LEFT OF BORINGS INDICATE SPT VALUE FOR 1 FOOT (12") PENETRATION (UNLESS OTHERWISE NOTED)
- d DIAMETER
- t TIME
- NA NOT AVAILABLE
- CR CORE RECOVERY
- RQD ROCK QUALITY DESIGNATION
- γ UNIT WEIGHT lb/cft
- Q_u UNCONFINED COMPRESSION AT SAMPLE DEPTH (tsf)
- Q_{st} SPLIT TENSILE STRENGTH AT SAMPLE DEPTH (tsf)
- ⇦ LOSS OF CIRCULATION
- WOH WEIGHT OT THE HAMMER
- CASING USED

NOTES:

1. THE LIMESTONE MAY BE HARD TO EXCAVATE AND DEWATER; SPECIAL EQUIPMENT AND TOOLS MAY BE REQUIRED.
2. BORING LOCATIONS (STATIONS AND OFFSETS) BASED ON 70% PRELIMINARY ENGINEERING ALIGNMENT. SEE BORING LOCATION PLANS FOR SPECIFIC COORDINATE DATA.

ENVIRONMENTAL CLASSIFICATION

SEE THE GEOTECHNICAL REPORT

RELATION OF RQD AND IN-SITU ROCK QUALITY	
RQD (%)	ROCK QUALITY
90-100	EXCELLENT
75-90	GOOD
50-75	FAIR
25-50	POOR
0-25	VERY POOR

GRANULAR MATERIALS

RELATIVE DENSITY	SAFETY HAMMER SPT N-VALUE (BLOW/FOOT)	AUTOMATIC HAMMER SPT N-VALUE (BLOW/FOOT)
VERY LOOSE	LESS THAN 4	LESS THAN 3
LOOSE	4 - 10	3 - 7
MEDIUM DENSE	10 - 30	7 - 21
DENSE	30 - 50	21 - 35
VERY DENSE	GREATER THAN 50	GREATER THAN 35

SK	05-06					
Designed by	Date					
SK/EP	05-06					
Drawn by	Date					
AK	05-06					
Checked by	Date					
Approved by	Date	No.	Date	By / Chk	App.	Revisions

NORTH CORRIDOR METRORAIL EXTENSION - PRELIMINARY ENGINEERING (100% SUBMITTAL)

MIAMI-DADE COUNTY
MIAMI-DADE TRANSIT

PARSONS
7600 CORPORATE CENTER DRIVE, SUITE 500
MIAMI, FLORIDA 33126
PHONE: (786) 464-1000 FAX: (786) 845-7119
CERTIFICATE OF AUTHORIZATION NO. 1838
Approved Date

HP CONSULTANTS INC.
License No. 9509
ARVIND KUMBHOJKAR, PH.D. P.E.
License No. 41067
10220 SW 107 Street
Miami, Fl 33176 Ph:(305)596-1585
Approved Date

GEOTECHNICAL

REPORT OF CORE BORINGS

Scale 1" = 16' | Drawing GE-029 | Sheet 421

5/3/2006 11:47:40 PM c:\HP\BORING_PROFILE\Rgeonc03.dgn

BORING No.: B-33
LOCATION: 188+96.433 (17.073' RT)
ELEVATION: 8.40
HAMMER: AUTOMATIC
TYPE OF RIG: CME 55
DATE: 05/30/05

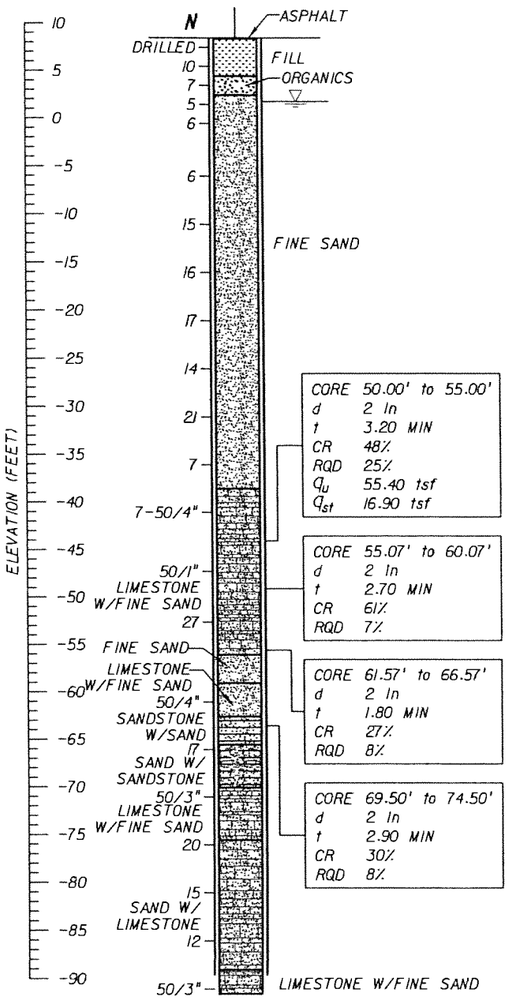

CORE	50.00' to 55.00'
d	2 In
t	3.20 MIN
CR	48%
RQD	25%
q_u	55.40 tsf
q_{st}	16.90 tsf

CORE	55.07' to 60.07'
d	2 In
t	2.70 MIN
CR	61%
RQD	7%

CORE	61.57' to 66.57'
d	2 In
t	1.80 MIN
CR	27%
RQD	8%

CORE	69.50' to 74.50'
d	2 In
t	2.90 MIN
CR	30%
RQD	8%

BORING TERMINATED AT 100 FT DEPTH

BORING No.: B-34
LOCATION: 191+35.770 (15.998' RT)
ELEVATION: 8.90
HAMMER: AUTOMATIC
TYPE OF RIG: CME 75
DATE: 05/31/05

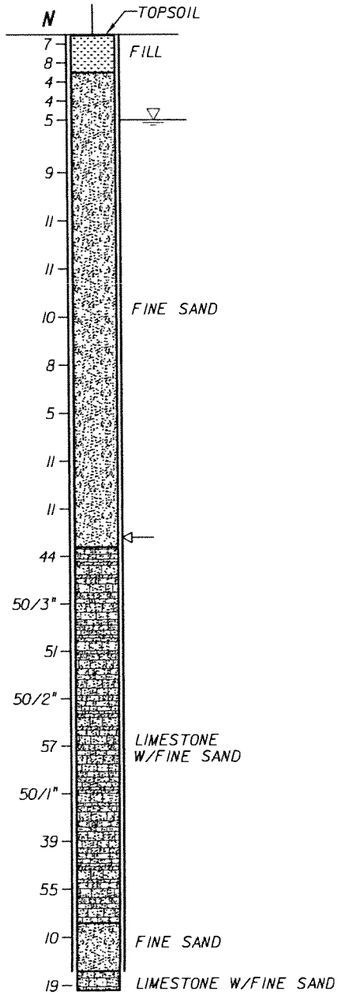

BORING TERMINATED AT 100 FT DEPTH

BORING No.: B-35
LOCATION: 193+23.958 (16.462' RT)
ELEVATION: 8.50
HAMMER: AUTOMATIC
TYPE OF RIG: CME 55
DATE: 06/01/05

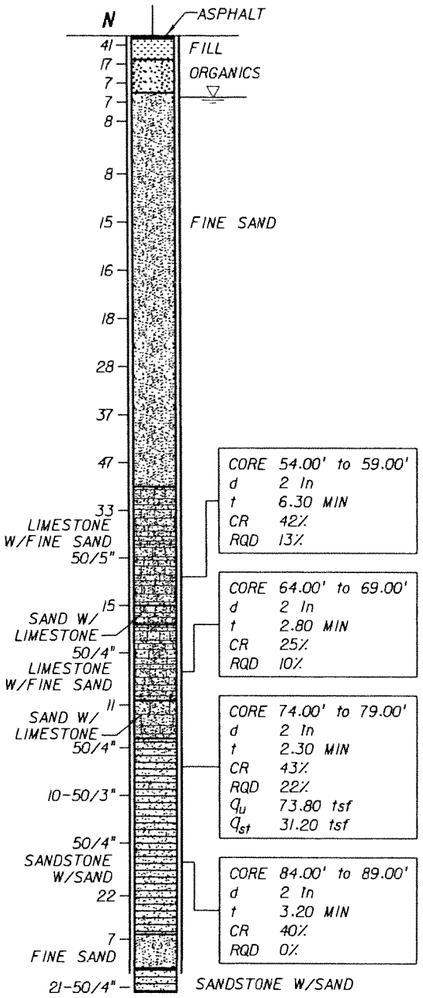

CORE	54.00' to 59.00'
d	2 In
t	6.30 MIN
CR	42%
RQD	13%

CORE	64.00' to 69.00'
d	2 In
t	2.80 MIN
CR	25%
RQD	10%

CORE	74.00' to 79.00'
d	2 In
t	2.30 MIN
CR	43%
RQD	22%
q_u	73.80 tsf
q_{st}	31.20 tsf

CORE	84.00' to 89.00'
d	2 In
t	3.20 MIN
CR	40%
RQD	0%

BORING TERMINATED AT 100 FT DEPTH

BORING No.: B-36
LOCATION: 194+60.355 (15.922' RT)
ELEVATION: 8.35
HAMMER: AUTOMATIC
TYPE OF RIG: CME 55
DATE: 06/02/05

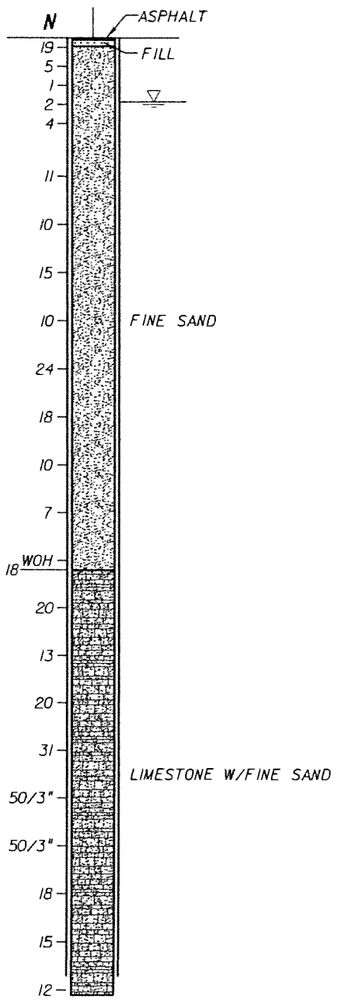

BORING TERMINATED AT 100 FT DEPTH

LEGEND:

- ASPHALT PAVEMENT
- (TOPSOIL) BLACK/DARK BROWN/DARK GRAY TO GRAY, SILTY SAND WITH ROOTS, ORGANICS, AND OTHER MATERIALS
- (FILL) LIMEROCK FRAGMENTS, COARSE GRAVEL TO SILT SIZE, IN SHADES OF BROWN OR GRAY, OCCASIONALLY MIXED WITH TOP SOIL
- (FINE SAND) VERY LOOSE TO VERY DENSE, FINE-SAND-SIZE MATERIAL IN SHADES OF BROWN, GRAY, OR OTHERS COLORS, OCCASIONALLY ORGANIC STAINED
- (SILTY SAND) SILTY SAND-SIZE MATERIAL IN SHADES OF BROWN/GRAY/OTHER COLORS POSSIBLY DISINTEGRATED SEDIMETARY ROCK
- (LIMESTONE WITH FINE SAND) VUGGY, SEDIMENTARY ROCK MADE OF $CaCO_3$, WITH SAND-SIZE MATERIAL, IN SHADES OF BROWN/GRAY/OTHER COLORS, OCCASIONALLY WITH SANDSTONE AND SHELL FRAGMENTS
- (SAND WITH LIMESTONE) SAND-SIZE MATERIAL WITH LIMESTONE FRAGMENTS IN SHADES OF BROWN, GRAY, OR OTHER COLORS, SOMETIMES WITH SANDSTONE FRAGMENTS
- (ORGANICS) DARK GRAY TO BLACK, SILT TO FINE-SAND-SIZE MATERIAL HAVING ORGANIC CONTENT> 5%
- (SANDSTONE WITH SAND) SEDIMENTARY ROCK MADE OF SAND-SIZE MATERIAL IN $CaCO_3$ MATRIX, IN SHADES OF BROWN OR GRAY, WITH FINE-SAND-SIZE MATERIAL
- (SAND WITH SANDSTONE) SAND-SIZE MATERIAL WITH SANDSTONE FRAGMENTS IN SHADES OF BROWN/GRAY/ OTHER COLORS
- (SANDY SILT) SANDY, SILT-SIZE MATERIAL IN SHADES OF BLACK/BROWN/GRAY, POSSIBLY DISINTEGRATED SEDIMETARY ROCK

NOTES:

- WATER TABLE AT THE TIME OF DRILLING
- N — NUMBERS TO THE LEFT OF BORINGS INDICATE SPT VALUE FOR 1 FOOT (12") PENETRATION (UNLESS OTHERWISE NOTED)
- d — DIAMETER
- t — TIME
- NA — NOT AVAILABLE
- CR — CORE RECOVERY
- RQD — ROCK QUALITY DESIGNATION
- δ — UNIT WEIGHT lb/cft
- q_u — UNCONFINED COMPRESSION AT SAMPLE DEPTH (tsf)
- q_{st} — SPLIT TENSILE STRENGTH AT SAMPLE DEPTH (tsf)
- ⟵ — LOSS OF CIRCULATION
- WOH — WEIGHT OT THE HAMMER
- CASING USED

NOTES:

1. THE LIMESTONE MAY BE HARD TO EXCAVATE AND DEWATER; SPECIAL EQUIPMENT AND TOOLS MAY BE REQUIRED.
2. BORING LOCATIONS (STATIONS AND OFFSETS) BASED ON 70% PRELIMINARY ENGINEERING ALIGNMENT. SEE BORING LOCATION PLANS FOR SPECIFIC COORDINATE DATA.

VERTICAL SCALE: 1"=16'

ENVIRONMENTAL CLASSIFICATION

SEE THE GEOTECHNICAL REPORT

RELATION OF RQD AND IN-SITU ROCK QUALITY	
RQD (%)	ROCK QUALITY
90-100	EXCELLENT
75-90	GOOD
50-75	FAIR
25-50	POOR
0-25	VERY POOR

GRANULAR MATERIALS

RELATIVE DENSITY	SAFETY HAMMER SPT N-VALUE (BLOW/FOOT)	AUTOMATIC HAMMER SPT N-VALUE (BLOW/FOOT)
VERY LOOSE	LESS THAN 4	LESS THAN 3
LOOSE	4 - 10	3 - 7
MEDIUM DENSE	10 - 30	7 - 21
DENSE	30 - 50	21 - 35
VERY DENSE	GREATER THAN 50	GREATER THAN 35

SK Designed by 05-06 Date
SK/EP Drawn by 05-06 Date
AK Checked by 05-06 Date
Approved by Date

No.	Date	By / Chk	App.	Revisions

NORTH CORRIDOR METRORAIL EXTENSION - PRELIMINARY ENGINEERING (100% SUBMITTAL)

MIAMI-DADE COUNTY
MIAMI-DADE TRANSIT

PARSONS
7600 CORPORATE CENTER DRIVE, SUITE 500
MIAMI, FLORIDA 33126
PHONE: (786) 464-1000 FAX: (786) 845-7119
CERTIFICATE OF AUTHORIZATION NO. 1838

Approved Date

HP CONSULTANTS INC.
License No. 9509
ARVIND KUMBHOJKAR, PH.D, P.E.
License No. 41067
10220 SW 107 Street
Miami, Fl 33176 Ph:(305)596-1585

Approved Date

GEOTECHNICAL

REPORT OF CORE BORINGS

Scale 1" = 16' | Drawing GE-030 | Sheet 422

5/3/2006 11:48:22 PM c:\HP\BORING_PROFILE\Rgeonc03.dgn

BORING No.: B-37
LOCATION: 197+11.176 (1.942' LT)
ELEVATION: 8.80
HAMMER: AUTOMATIC
TYPE OF RIG: CME 55
DATE: 06/03/05

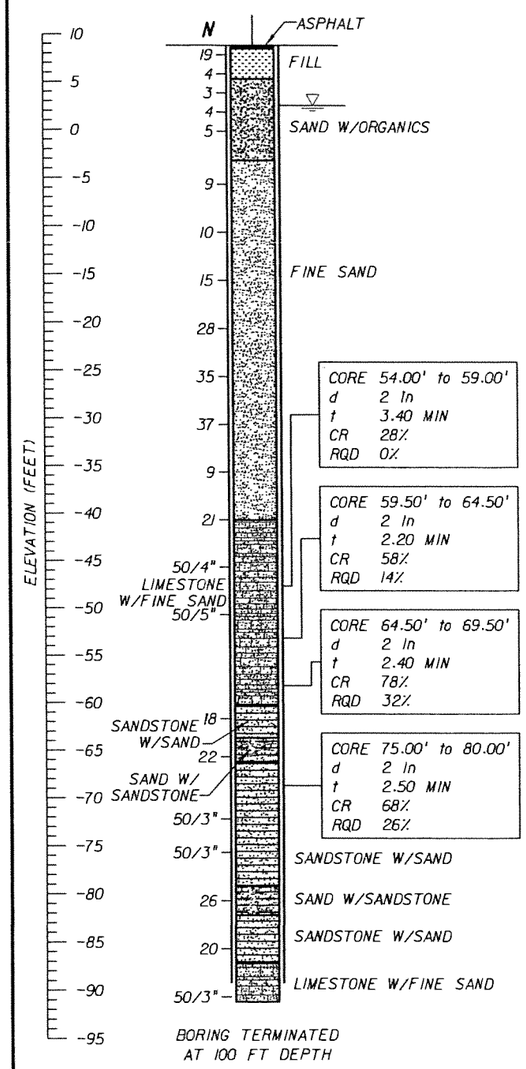

BORING TERMINATED AT 100 FT DEPTH

BORING No.: B-38
LOCATION: 199+02.769 (11.431' RT)
ELEVATION: 7.50
HAMMER: AUTOMATIC
TYPE OF RIG: CME 55
DATE: 06/07/05

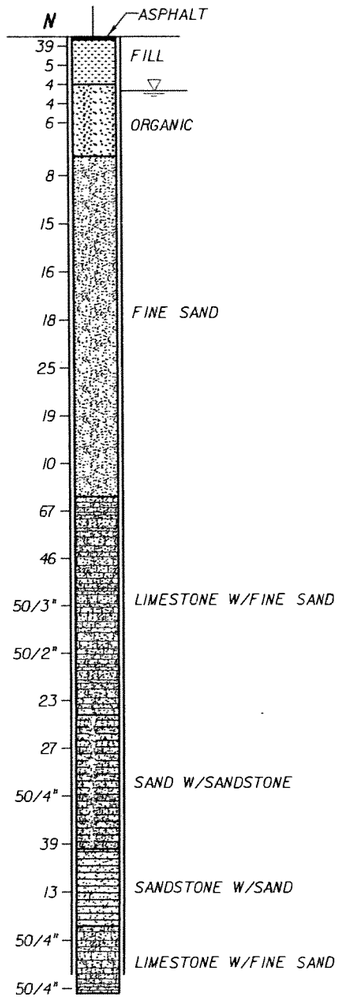

BORING TERMINATED AT 100 FT DEPTH

BORING No.: B-39
LOCATION: 201+96.925 (6.598' RT)
ELEVATION: 8.60
HAMMER: AUTOMATIC
TYPE OF RIG: CME 75
DATE: 06/06/05

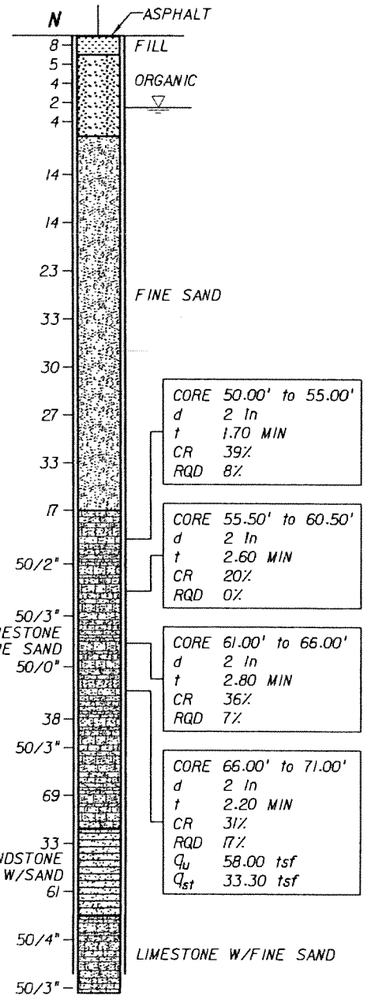

BORING TERMINATED AT 100 FT DEPTH

VERTICAL SCALE: 1"=16'

BORING No.: B-40
LOCATION: 205+35.074 (8.405' LT)
ELEVATION: 9.80
HAMMER: AUTOMATIC
TYPE OF RIG: CME 55
DATE: 06/30/05

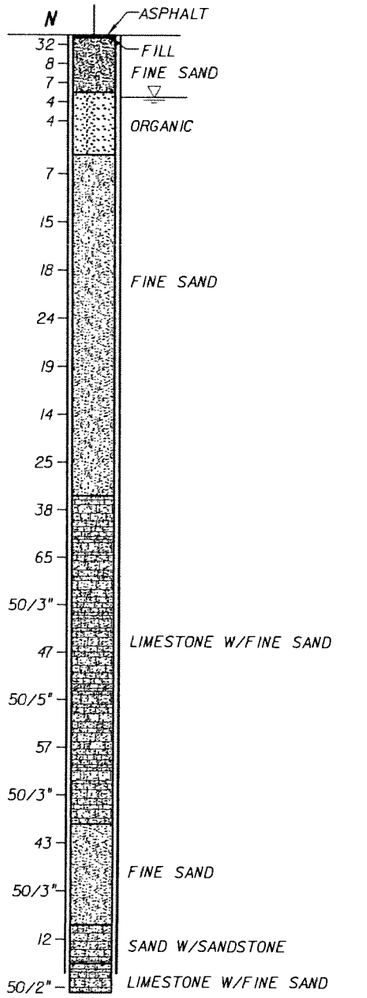

BORING TERMINATED AT 100 FT DEPTH

ENVIRONMENTAL CLASSIFICATION

SEE THE GEOTECHNICAL REPORT

LEGEND:

- ASPHALT PAVEMENT
- (TOPSOIL) BLACK/DARK BROWN/DARK GRAY TO GRAY, SILTY SAND WITH ROOTS, ORGANICS, AND OTHER MATERIALS
- (FILL) LIMEROCK FRAGMENTS, COARSE GRAVEL TO SILT SIZE, IN SHADES OF BROWN OR GRAY, OCCASIONALLY MIXED WITH TOP SOIL
- (FINE SAND) VERY LOOSE TO VERY DENSE, FINE-SAND-SIZE MATERIAL IN SHADES OF BROWN, GRAY, OR OTHERS COLORS, OCCASIONALLY ORGANIC STAINED
- (SILTY SAND) SILTY SAND-SIZE MATERIAL IN SHADES OF BROWN/GRAY/OTHER COLORS POSSIBLY DISINTEGRATED SEDIMETARY ROCK
- (LIMESTONE WITH FINE SAND) VUGGY, SEDIMENTARY ROCK MADE OF $CaCO_3$, WITH SAND-SIZE MATERIAL, IN SHADES OF BROWN/GRAY/OTHER COLORS, OCCASIONALLY WITH SANDSTONE AND SHELL FRAGMENTS
- (SAND WITH LIMESTONE) SAND-SIZE MATERIAL WITH LIMESTONE FRAGMENTS IN SHADES OF BROWN, GRAY, OR OTHER COLORS, SOMETIMES WITH SANDSTONE FRAGMENTS
- (ORGANICS) DARK GRAY TO BLACK, SILT TO FINE-SAND-SIZE MATERIAL HAVING ORGANIC CONTENT> 5%
- (SANDSTONE WITH SAND) SEDIMENTARY ROCK MADE OF SAND-SIZE MATERIAL IN $CaCO_3$ MATRIX, IN SHADES OF BROWN OR GRAY, WITH FINE-SAND-SIZE MATERIAL
- (SAND WITH SANDSTONE) SAND-SIZE MATERIAL WITH SANDSTONE FRAGMENTS IN SHADES OF BROWN/GRAY/ OTHER COLORS
- (SANDY SILT) SANDY, SILT-SIZE MATERIAL IN SHADES OF BLACK/BROWN/GRAY, POSSIBLY DISINTEGRATED SEDIMETARY ROCK

NOTES:

- WATER TABLE AT THE TIME OF DRILLING
- **N** NUMBERS TO THE LEFT OF BORINGS INDICATE SPT VALUE FOR 1 FOOT (12") PENETRATION (UNLESS OTHERWISE NOTED)
- d DIAMETER
- t TIME
- NA NOT AVAILABLE
- CR CORE RECOVERY
- RQD ROCK QUALITY DESIGNATION
- γ UNIT WEIGHT lb/cft
- q_u UNCONFINED COMPRESSION AT SAMPLE DEPTH (tsf)
- q_{st} SPLIT TENSILE STRENGTH AT SAMPLE DEPTH (tsf)
- ⟵ LOSS OF CIRCULATION
- WOH WEIGHT OT THE HAMMER
- CASING USED

NOTES:

1. THE LIMESTONE MAY BE HARD TO EXCAVATE AND DEWATER; SPECIAL EQUIPMENT AND TOOLS MAY BE REQUIRED.
2. BORING LOCATIONS (STATIONS AND OFFSETS) BASED ON 70% PRELIMINARY ENGINEERING ALIGNMENT. SEE BORING LOCATION PLANS FOR SPECIFIC COORDINATE DATA.

RELATION OF RQD AND IN-SITU ROCK QUALITY

RQD (%)	ROCK QUALITY
90-100	EXCELLENT
75-90	GOOD
50-75	FAIR
25-50	POOR
0-25	VERY POOR

GRANULAR MATERIALS

RELATIVE DENSITY	SAFETY HAMMER SPT N-VALUE (BLOW/FOOT)	AUTOMATIC HAMMER SPT N-VALUE (BLOW/FOOT)
VERY LOOSE	LESS THAN 4	LESS THAN 3
LOOSE	4 - 10	3 - 7
MEDIUM DENSE	10 - 30	7 - 21
DENSE	30 - 50	21 - 35
VERY DENSE	GREATER THAN 50	GREATER THAN 35

SK	05-06					
Designed by	Date					
SK/EP	05-06					
Drawn by	Date					
AK	05-06					
Checked by	Date					
Approved by	Date	No.	Date	By / Chk	App.	Revisions

NORTH CORRIDOR METRORAIL EXTENSION - PRELIMINARY ENGINEERING (100% SUBMITTAL)

GEOTECHNICAL

MIAMI-DADE COUNTY
MIAMI-DADE TRANSIT

PARSONS
7600 CORPORATE CENTER DRIVE, SUITE 500
MIAMI, FLORIDA 33126
PHONE: (786) 454-1000 FAX: (786) 845-7119
CERTIFICATE OF AUTHORIZATION NO. 1838

Approved | Date

HP CONSULTANTS INC.
License No. 9509
ARVIND KUMBHOJKAR, PH.D. P.E.
License No. 41067
10220 SW 107 Street
Miami, Fl 33176 Ph:(305)596-1585

Approved | Date

REPORT OF CORE BORINGS

Scale 1" = 16' | Drawing GE-031 | Sheet 423

5/3/2006 11:56:42 PM c:\HP\BORING_PROFILE\Rgeono04.dgn

BORING No.: B-41
LOCATION: 208+97.787 (26.169' LT)
ELEVATION: 9.22
HAMMER: AUTOMATIC
TYPE OF RIG: CME 55
DATE: 06/24/05

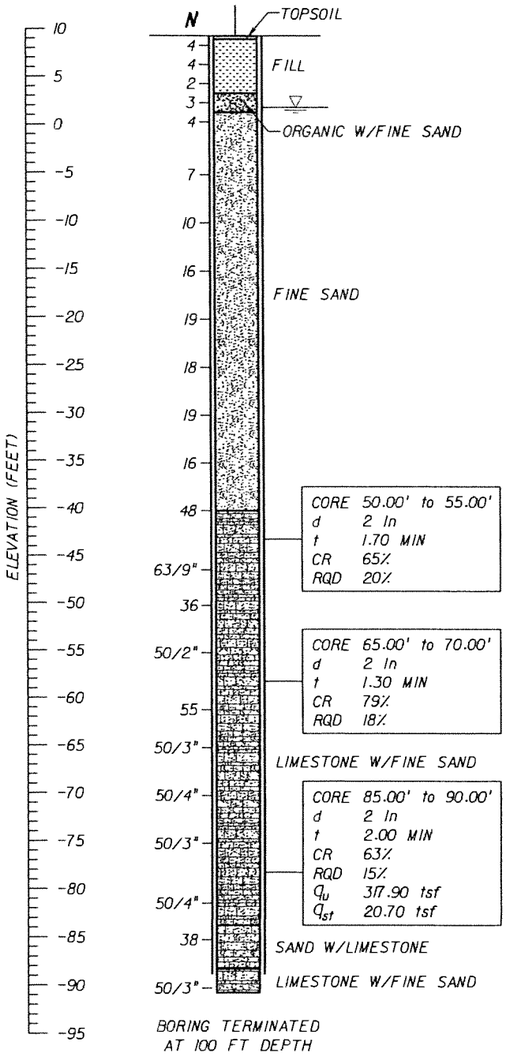

BORING TERMINATED AT 100 FT DEPTH

BORING No.: B-42
LOCATION: 217+17.245 (18.242' LT)
ELEVATION: 8.47
HAMMER: AUTOMATIC
TYPE OF RIG: CME 55
DATE: 06/08/05

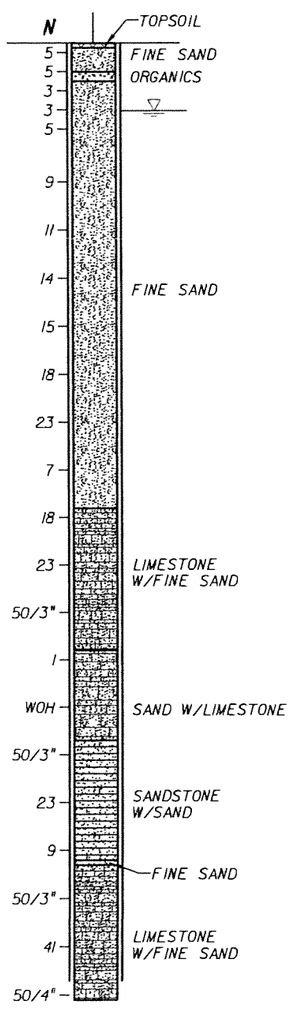

BORING TERMINATED AT 100 FT DEPTH

BORING No.: B-43
LOCATION: 214+08.122 (2.991' LT)
ELEVATION: 8.67
HAMMER: AUTOMATIC
TYPE OF RIG: CME 55
DATE: 06/10/05

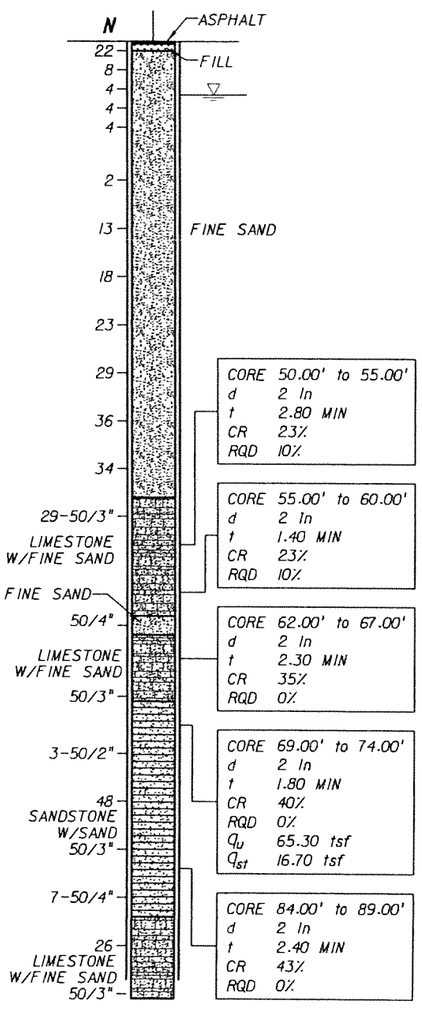

BORING TERMINATED AT 100 FT DEPTH

VERTICAL SCALE: 1"=16'

BORING No.: B-44
LOCATION: 22+97.086 (10.579' LT)
ELEVATION: 9.04
HAMMER: AUTOMATIC
TYPE OF RIG: CME 55
DATE: 06/09/05

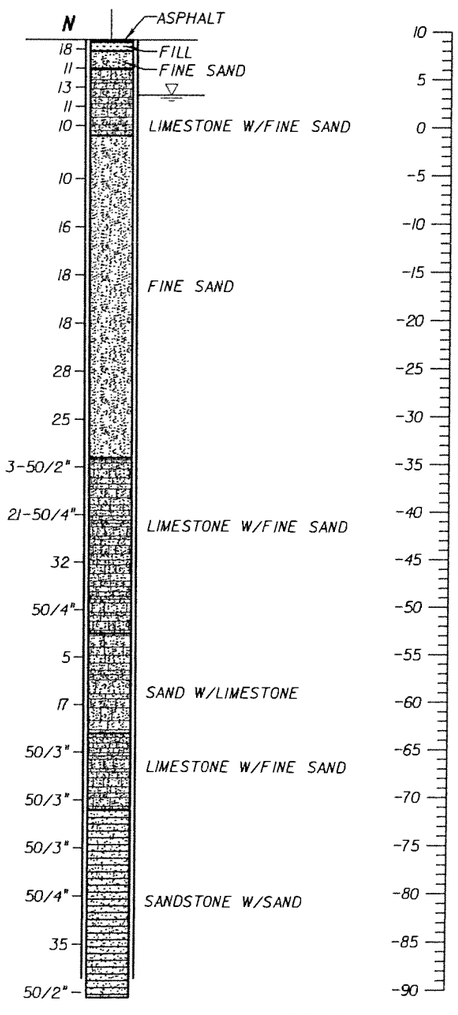

BORING TERMINATED AT 100 FT DEPTH

ENVIRONMENTAL CLASSIFICATION

SEE THE GEOTECHNICAL REPORT

LEGEND:

- ASPHALT PAVEMENT
- (TOPSOIL) BLACK/DARK BROWN/DARK GRAY TO GRAY, SILTY SAND WITH ROOTS, ORGANICS, AND OTHER MATERIALS
- (FILL) LIMEROCK FRAGMENTS, COARSE GRAVEL TO SILT SIZE, IN SHADES OF BROWN OR GRAY, OCCASIONALLY MIXED WITH TOP SOIL
- (FINE SAND) VERY LOOSE TO VERY DENSE, FINE-SAND-SIZE MATERIAL IN SHADES OF BROWN, GRAY, OR OTHERS COLORS, OCCASIONALLY ORGANIC STAINED
- (SILTY SAND) SILTY SAND-SIZE MATERIAL IN SHADES OF BROWN/GRAY/OTHER COLORS POSSIBLY DISINTEGRATED SEDIMETARY ROCK
- (LIMESTONE WITH FINE SAND) VUGGY, SEDIMENTARY ROCK MADE OF $CaCO_3$, WITH SAND-SIZE MATERIAL, IN SHADES OF BROWN/GRAY/OTHER COLORS, OCCASIONALLY WITH SANDSTONE AND SHELL FRAGMENTS
- (SAND WITH LIMESTONE) SAND-SIZE MATERIAL WITH LIMESTONE FRAGMENTS IN SHADES OF BROWN, GRAY, OR OTHER COLORS, SOMETIMES WITH SANDSTONE FRAGMENTS
- (ORGANICS) DARK GRAY TO BLACK, SILT TO FINE-SAND-SIZE MATERIAL HAVING ORGANIC CONTENT> 5%
- (SANDSTONE WITH SAND) SEDIMENTARY ROCK MADE OF SAND-SIZE MATERIAL IN $CaCO_3$ MATRIX, IN SHADES OF BROWN OR GRAY, WITH FINE-SAND-SIZE MATERIAL
- (SAND WITH SANDSTONE) SAND-SIZE MATERIAL WITH SANDSTONE FRAGMENTS IN SHADES OF BROWN/GRAY/ OTHER COLORS
- (SANDY SILT) SANDY, SILT-SIZE MATERIAL IN SHADES OF BLACK/BROWN/GRAY, POSSIBLY DISINTEGRATED SEDIMETARY ROCK

NOTES:

- WATER TABLE AT THE TIME OF DRILLING
- N — NUMBERS TO THE LEFT OF BORINGS INDICATE SPT VALUE FOR 1 FOOT (12") PENETRATION (UNLESS OTHERWISE NOTED)
- d — DIAMETER
- t — TIME
- NA — NOT AVAILABLE
- CR — CORE RECOVERY
- RQD — ROCK QUALITY DESIGNATION
- γ — UNIT WEIGHT lb/cft
- q_u — UNCONFINED COMPRESSION AT SAMPLE DEPTH (tsf)
- q_{st} — SPLIT TENSILE STRENGTH AT SAMPLE DEPTH (tsf)
- ⇦ — LOSS OF CIRCULATION
- WOH — WEIGHT OT THE HAMMER
- CASING USED

NOTES:

1. THE LIMESTONE MAY BE HARD TO EXCAVATE AND DEWATER; SPECIAL EQUIPMENT AND TOOLS MAY BE REQUIRED.
2. BORING LOCATIONS (STATIONS AND OFFSETS) BASED ON 70% PRELIMINARY ENGINEERING ALIGNMENT. SEE BORING LOCATION PLANS FOR SPECIFIC COORDINATE DATA.

GRANULAR MATERIALS

RELATIVE DENSITY	SAFETY HAMMER SPT N-VALUE (BLOW/FOOT)	AUTOMATIC HAMMER SPT N-VALUE (BLOW/FOOT)
VERY LOOSE	LESS THAN 4	LESS THAN 3
LOOSE	4 - 10	3 - 7
MEDIUM DENSE	10 - 30	7 - 21
DENSE	30 - 50	21 - 35
VERY DENSE	GREATER THAN 50	GREATER THAN 35

RELATION OF RQD AND IN-SITU ROCK QUALITY

RQD (%)	ROCK QUALITY
90-100	EXCELLENT
75-90	GOOD
50-75	FAIR
25-50	POOR
0-25	VERY POOR

SK	05-06					
Designed by	Date					
SK/EP	05-06					
Drawn by	Date					
AK	05-06					
Checked by	Date					
Approved by	Date	No.	Date	By / Chk	App.	Revisions

NORTH CORRIDOR METRORAIL EXTENSION - PRELIMINARY ENGINEERING (100% SUBMITTAL)

MIAMI-DADE COUNTY — MIAMI-DADE TRANSIT

PARSONS
7600 CORPORATE CENTER DRIVE, SUITE 500
MIAMI, FLORIDA 33126
PHONE: (786) 464-1000 FAX: (786) 845-7119
CERTIFICATE OF AUTHORIZATION NO. 1836
Approved Date

HP CONSULTANTS INC.
License No. 9509
ARVIND KUMBHOJKAR, PH.D, P.E.
License No. 41067
10220 SW 107 Street
Miami, FL 33176 Ph:(305)596-1585
Approved Date

GEOTECHNICAL

REPORT OF CORE BORINGS

Scale 1" = 16' | Drawing GE-032 | Sheet 424

5/3/2006 11:57:24 PM c:\HP\BORING_PROFILE\Rgeonc04.dgn

BORING No.: B-45
LOCATION: 226+11.030 (8.777' LT)
ELEVATION: 8.31
HAMMER: AUTOMATIC
TYPE OF RIG: CME 55
DATE: 06/11/05

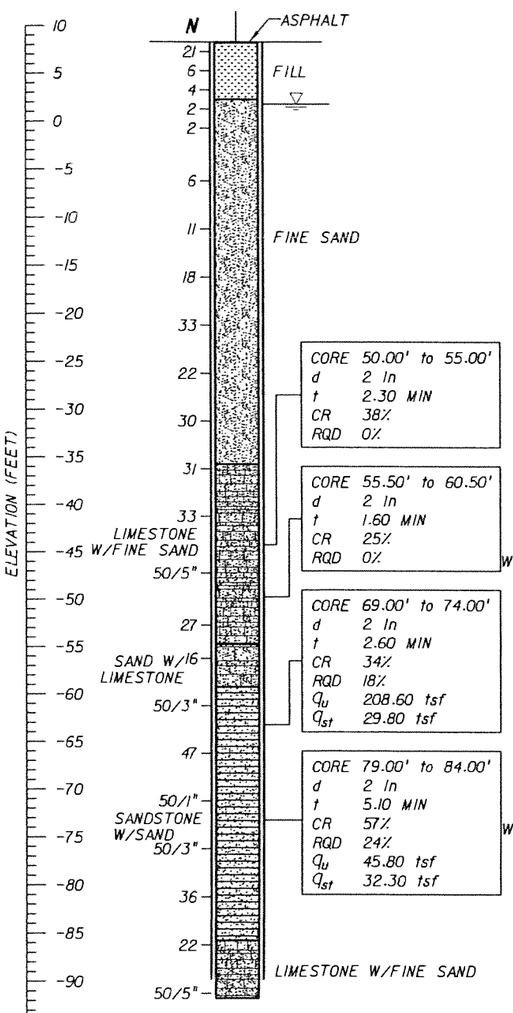

BORING TERMINATED AT 100 FT DEPTH

BORING No.: B-46
LOCATION: 229+08.387 (7.156' LT)
ELEVATION: 9.49
HAMMER: AUTOMATIC
TYPE OF RIG: CME 55
DATE: 06/12/05

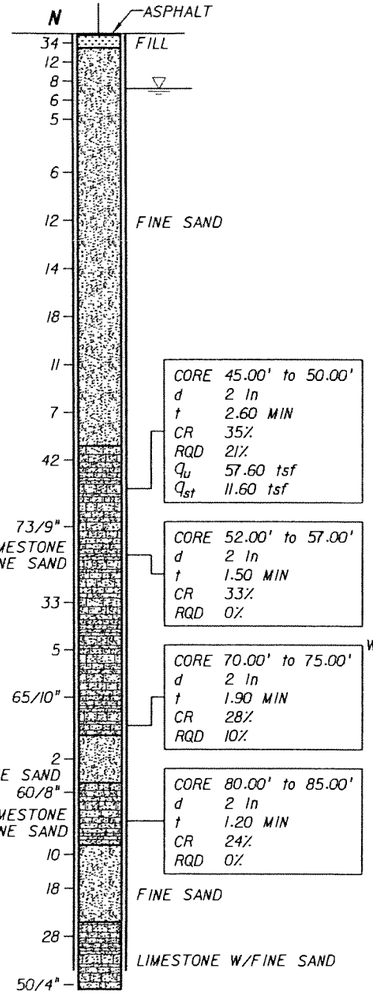

BORING TERMINATED AT 100 FT DEPTH

BORING No.: B-47
LOCATION: 232+33.025 (6.288' RT)
ELEVATION: 9.12
HAMMER: AUTOMATIC
TYPE OF RIG: CME 55
DATE: 06/13/05

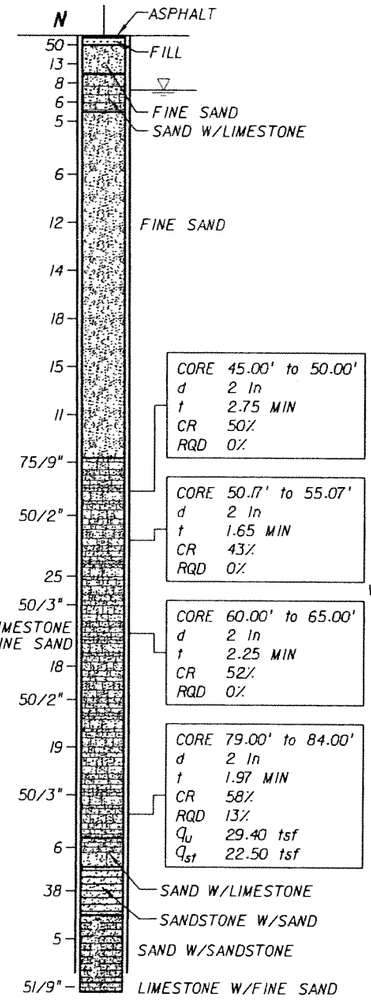

BORING TERMINATED AT 100 FT DEPTH

VERTICAL SCALE: 1"=16'

BORING No.: B-48
LOCATION: 235+13.160 (10.078' LT)
ELEVATION: 9.36
HAMMER: AUTOMATIC
TYPE OF RIG: CME 55
DATE: 06/14/05

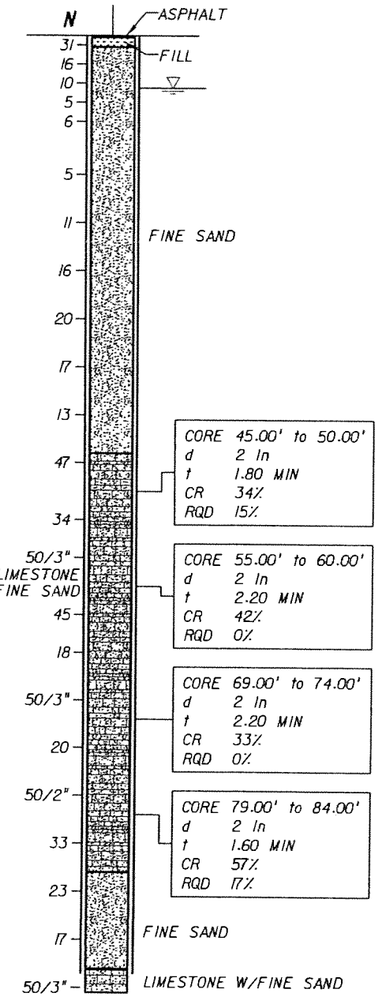

BORING TERMINATED AT 100 FT DEPTH

ENVIRONMENTAL CLASSIFICATION

SEE THE GEOTECHNICAL REPORT

LEGEND:

- ASPHALT PAVEMENT
- (TOPSOIL) BLACK/DARK BROWN/DARK GRAY TO GRAY, SILTY SAND WITH ROOTS, ORGANICS, AND OTHER MATERIALS
- (FILL) LIMEROCK FRAGMENTS, COARSE GRAVEL TO SILT SIZE, IN SHADES OF BROWN OR GRAY, OCCASIONALLY MIXED WITH TOP SOIL
- (FINE SAND) VERY LOOSE TO VERY DENSE, FINE-SAND-SIZE MATERIAL IN SHADES OF BROWN, GRAY, OR OTHERS COLORS, OCCASIONALLY ORGANIC STAINED
- (SILTY SAND) SILTY SAND-SIZE MATERIAL IN SHADES OF BROWN/GRAY/OTHER COLORS POSSIBLY DISINTEGRATED SEDIMETARY ROCK
- (LIMESTONE WITH FINE SAND) VUGGY, SEDIMENTARY ROCK MADE OF $CaCO_3$, WITH SAND-SIZE MATERIAL, IN SHADES OF BROWN/GRAY/OTHER COLORS, OCCASIONALLY WITH SANDSTONE AND SHELL FRAGMENTS
- (SAND WITH LIMESTONE) SAND-SIZE MATERIAL WITH LIMESTONE FRAGMENTS IN SHADES OF BROWN, GRAY, OR OTHER COLORS, SOMETIMES WITH SANDSTONE FRAGMENTS
- (ORGANICS) DARK GRAY TO BLACK, SILT TO FINE-SAND-SIZE MATERIAL HAVING ORGANIC CONTENT > 5%
- (SANDSTONE WITH SAND) SEDIMENTARY ROCK MADE OF SAND-SIZE MATERIAL IN $CaCO_3$ MATRIX, IN SHADES OF BROWN OR GRAY, WITH FINE-SAND-SIZE MATERIAL
- (SAND WITH SANDSTONE) SAND-SIZE MATERIAL WITH SANDSTONE FRAGMENTS IN SHADES OF BROWN/GRAY/OTHER COLORS
- (SANDY SILT) SANDY, SILT-SIZE MATERIAL IN SHADES OF BLACK/BROWN/GRAY, POSSIBLY DISINTEGRATED SEDIMETARY ROCK

NOTES:

- WATER TABLE AT THE TIME OF DRILLING
- N — NUMBERS TO THE LEFT OF BORINGS INDICATE SPT VALUE FOR 1 FOOT (12") PENETRATION (UNLESS OTHERWISE NOTED)
- d — DIAMETER
- t — TIME
- NA — NOT AVAILABLE
- CR — CORE RECOVERY
- RQD — ROCK QUALITY DESIGNATION
- d — UNIT WEIGHT lb/cft
- q_u — UNCONFINED COMPRESSION AT SAMPLE DEPTH (tsf)
- q_{st} — SPLIT TENSILE STRENGTH AT SAMPLE DEPTH (tsf)
- ⟵ — LOSS OF CIRCULATION
- WOH — WEIGHT OT THE HAMMER
- CASING USED

NOTES:

1. THE LIMESTONE MAY BE HARD TO EXCAVATE AND DEWATER; SPECIAL EQUIPMENT AND TOOLS MAY BE REQUIRED.
2. BORING LOCATIONS (STATIONS AND OFFSETS) BASED ON 70% PRELIMINARY ENGINEERING ALIGNMENT. SEE BORING LOCATION PLANS FOR SPECIFIC COORDINATE DATA.

GRANULAR MATERIALS

RELATIVE DENSITY	SAFETY HAMMER SPT N-VALUE (BLOW/FOOT)	AUTOMATIC HAMMER SPT N-VALUE (BLOW/FOOT)
VERY LOOSE	LESS THAN 4	LESS THAN 3
LOOSE	4 - 10	3 - 7
MEDIUM DENSE	10 - 30	7 - 21
DENSE	30 - 50	21 - 35
VERY DENSE	GREATER THAN 50	GREATER THAN 35

RELATION OF RQD AND IN-SITU ROCK QUALITY	
RQD (%)	ROCK QUALITY
90-100	EXCELLENT
75-90	GOOD
50-75	FAIR
25-50	POOR
0-25	VERY POOR

SK	05-06				
Designed by	Date				
SK/EP	05-06				
Drawn by	Date				
AK	05-06				
Checked by	Date				
Approved by	Date	No.	Date	By / Chk	App. Revisions

NORTH CORRIDOR METRORAIL EXTENSION - PRELIMINARY ENGINEERING (100% SUBMITTAL)

MIAMI-DADE COUNTY — MIAMI-DADE TRANSIT

PARSONS
7600 CORPORATE CENTER DRIVE, SUITE 500
MIAMI, FLORIDA 33126
PHONE: (786) 464-1000 FAX: (786) 845-7119
CERTIFICATE OF AUTHORIZATION NO. 1838
Approved / Date

HP CONSULTANTS INC.
License No. 9509
ARVIND KUMBHOJKAR, PH.D. P.E.
License No. 41067
10220 SW 107 Street
Miami, Fl 33176 Ph:(305)596-1585
Approved / Date

GEOTECHNICAL

REPORT OF CORE BORINGS

Scale 1" = 16' | Drawing GE-033 | Sheet 425

5/3/2006 11:58:07 PM c:\HP\BORING_PROFILE\Rgeonc04.dgn

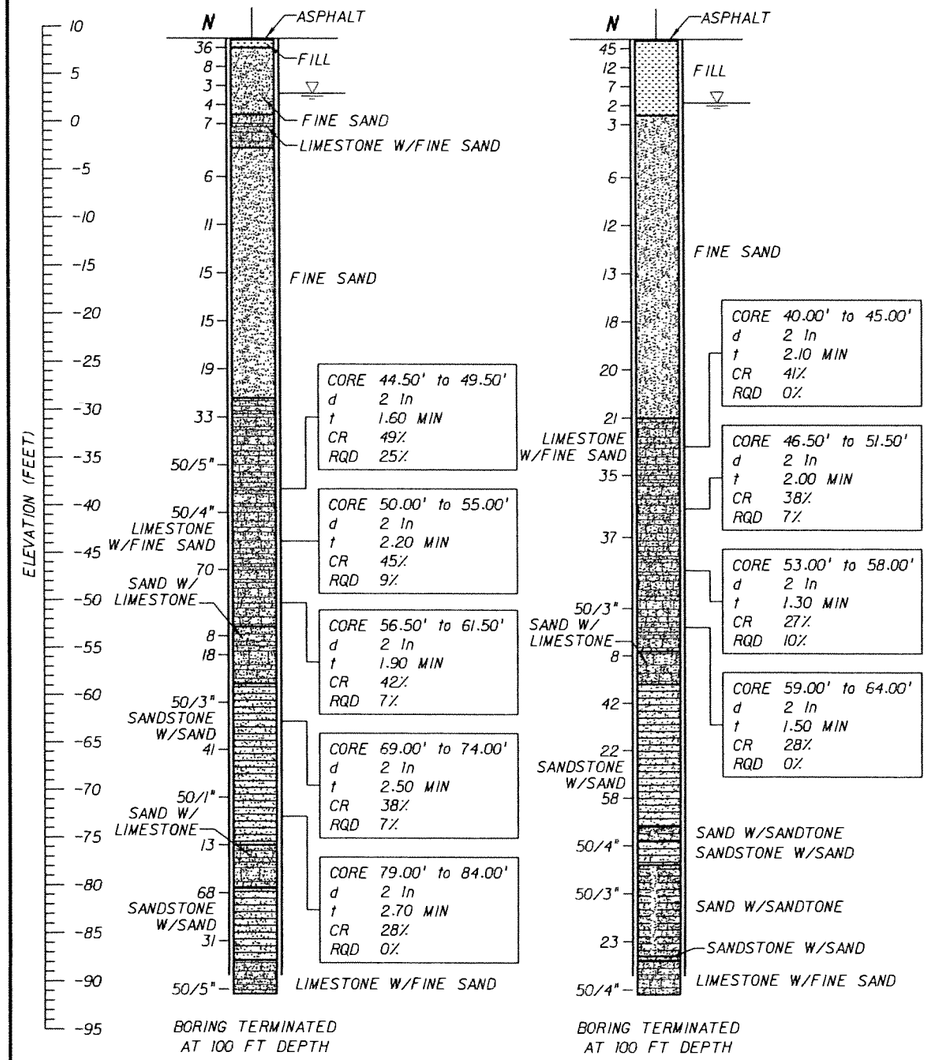

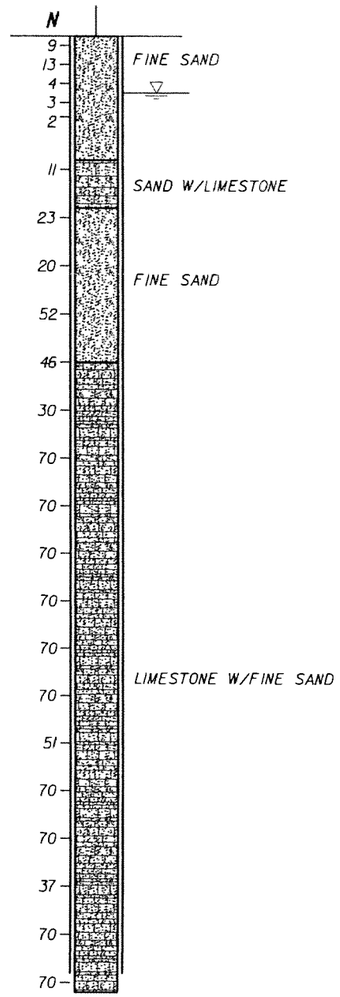

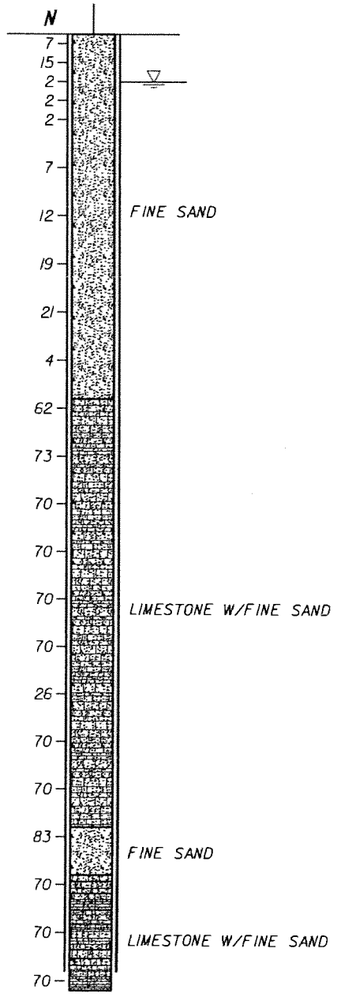

LEGEND:

- ASPHALT PAVEMENT
- (TOPSOIL) BLACK/DARK BROWN/DARK GRAY TO GRAY, SILTY SAND WITH ROOTS, ORGANICS, AND OTHER MATERIALS
- (FILL) LIMEROCK FRAGMENTS, COARSE GRAVEL TO SILT SIZE, IN SHADES OF BROWN OR GRAY, OCCASIONALLY MIXED WITH TOP SOIL
- (FINE SAND) VERY LOOSE TO VERY DENSE, FINE-SAND-SIZE MATERIAL IN SHADES OF BROWN, GRAY, OR OTHERS COLORS, OCCASIONALLY ORGANIC STAINED
- (SILTY SAND) SILTY SAND-SIZE MATERIAL IN SHADES OF BROWN/GRAY/OTHER COLORS POSSIBLY DISINTEGRATED SEDIMETARY ROCK
- (LIMESTONE WITH FINE SAND) VUGGY, SEDIMENTARY ROCK MADE OF $CaCO_3$, WITH SAND-SIZE MATERIAL, IN SHADES OF BROWN/GRAY/OTHER COLORS, OCCASIONALLY WITH SANDSTONE AND SHELL FRAGMENTS
- (SAND WITH LIMESTONE) SAND-SIZE MATERIAL WITH LIMESTONE FRAGMENTS IN SHADES OF BROWN, GRAY, OR OTHER COLORS, SOMETIMES WITH SANDSTONE FRAGMENTS
- (ORGANICS) DARK GRAY TO BLACK, SILT TO FINE-SAND-SIZE MATERIAL HAVING ORGANIC CONTENT > 5%
- (SANDSTONE WITH SAND) SEDIMENTARY ROCK MADE OF SAND-SIZE MATERIAL IN $CaCO_3$ MATRIX, IN SHADES OF BROWN OR GRAY, WITH FINE-SAND-SIZE MATERIAL
- (SAND WITH SANDSTONE) SAND-SIZE MATERIAL WITH SANDSTONE FRAGMENTS IN SHADES OF BROWN/GRAY/ OTHER COLORS
- (SANDY SILT) SANDY, SILT-SIZE MATERIAL IN SHADES OF BLACK/BROWN/GRAY, POSSIBLY DISINTEGRATED SEDIMETARY ROCK

NOTES:

- ▽ WATER TABLE AT THE TIME OF DRILLING
- N NUMBERS TO THE LEFT OF BORINGS INDICATE SPT VALUE FOR 1 FOOT (12") PENETRATION (UNLESS OTHERWISE NOTED)
- d DIAMETER
- t TIME
- NA NOT AVAILABLE
- CR CORE RECOVERY
- RQD ROCK QUALITY DESIGNATION
- γ_d UNIT WEIGHT lb/cft
- q_u UNCONFINED COMPRESSION AT SAMPLE DEPTH (tsf)
- q_{st} SPLIT TENSILE STRENGTH AT SAMPLE DEPTH (tsf)
- ⟵ LOSS OF CIRCULATION
- WOH WEIGHT OT THE HAMMER
- CASING USED

NOTES:

1. THE LIMESTONE MAY BE HARD TO EXCAVATE AND DEWATER; SPECIAL EQUIPMENT AND TOOLS MAY BE REQUIRED.
2. BORING LOCATIONS (STATIONS AND OFFSETS) BASED ON 70% PRELIMINARY ENGINEERING ALIGNMENT. SEE BORING LOCATION PLANS FOR SPECIFIC COORDINATE DATA.

VERTICAL SCALE: 1"=16'

ENVIRONMENTAL CLASSIFICATION

SEE THE GEOTECHNICAL REPORT

GRANULAR MATERIALS

RELATIVE DENSITY	SAFETY HAMMER SPT N-VALUE (BLOW/FOOT)	AUTOMATIC HAMMER SPT N-VALUE (BLOW/FOOT)
VERY LOOSE	LESS THAN 4	LESS THAN 3
LOOSE	4 - 10	3 - 7
MEDIUM DENSE	10 - 30	7 - 21
DENSE	30 - 50	21 - 35
VERY DENSE	GREATER THAN 50	GREATER THAN 35

RELATION OF RQD AND IN-SITU ROCK QUALITY

RQD (%)	ROCK QUALITY
90-100	EXCELLENT
75-90	GOOD
50-75	FAIR
25-50	POOR
0-25	VERY POOR

SK	05-06				
Designed by	Date				
SK/EP	05-06				
Drawn by	Date				
AK	05-06				
Checked by	Date				
Approved by	Date	No.	Date	By / Chk	App. Revisions

NORTH CORRIDOR METRORAIL EXTENSION - PRELIMINARY ENGINEERING (100% SUBMITTAL)

MIAMI-DADE COUNTY — MIAMI-DADE TRANSIT

PARSONS
7600 CORPORATE CENTER DRIVE, SUITE 500
MIAMI, FLORIDA 33126
PHONE: (786) 464-1000 FAX: (786) 845-7119
CERTIFICATE OF AUTHORIZATION NO. 1838
Approved Date

HP CONSULTANTS INC.
License No. 9509
ARVIND KUMBHOJKAR, PH.D. P.E.
License No. 41067
10220 SW 107 Street
Miami, Fl 33176 Ph:(305)596-1585
Approved Date

GEOTECHNICAL

REPORT OF CORE BORINGS

Scale 1" = 16' | Drawing GE-034 | Sheet 426

5/4/2006 12:05:20 AM c:\HP\BORING_PROFILE\Rgeonc05.dgn

BORING No.: B-53
LOCATION: 243+76.264 (31.399' LT)
ELEVATION: 7.95
HAMMER: SAFETY
TYPE OF RIG: B-53
DATE: 07/26/05

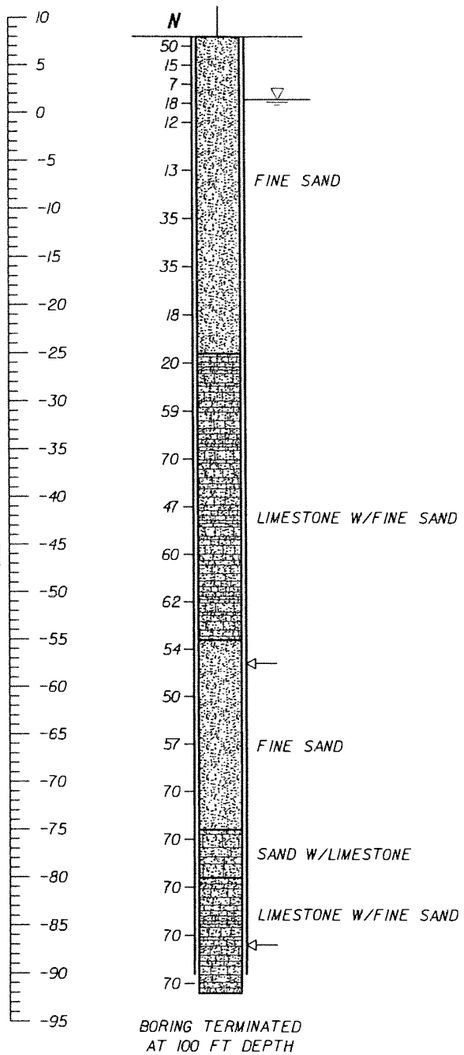

BORING TERMINATED AT 100 FT DEPTH

BORING No.: B-54
LOCATION: 245+69.664 (92.584' LT)
ELEVATION: 8.75
HAMMER: SAFETY
TYPE OF RIG: B-53
DATE: 07/20/05

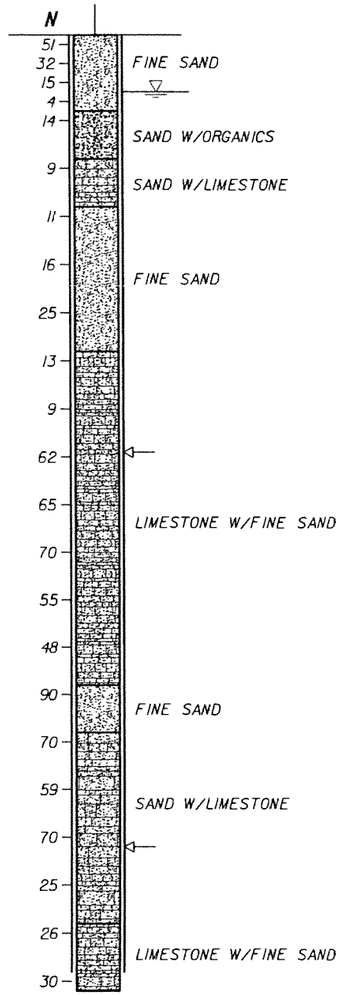

BORING TERMINATED AT 100 FT DEPTH

BORING No.: B-55
LOCATION: 246+85.806 (28.892' LT)
ELEVATION: 8.27
HAMMER: SAFETY
TYPE OF RIG: B-53
DATE: 07/25/05

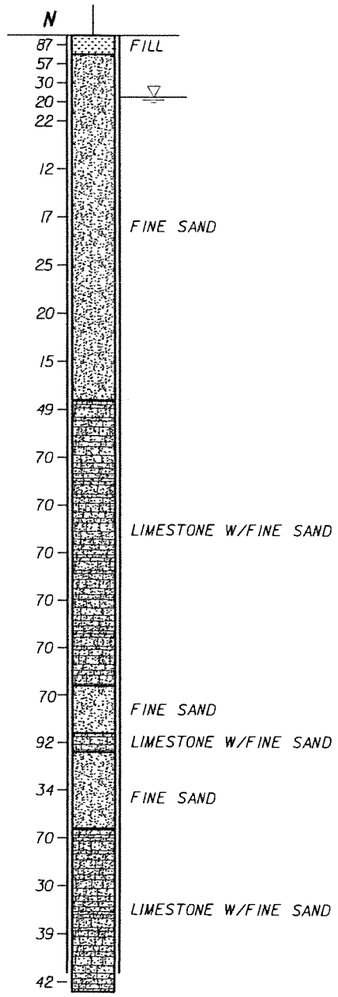

BORING TERMINATED AT 100 FT DEPTH

BORING No.: B-56
LOCATION: 249+71.992 (31.010' RT)
ELEVATION: 8.68
HAMMER: SAFETY
TYPE OF RIG: B-53
DATE: 07/15/05

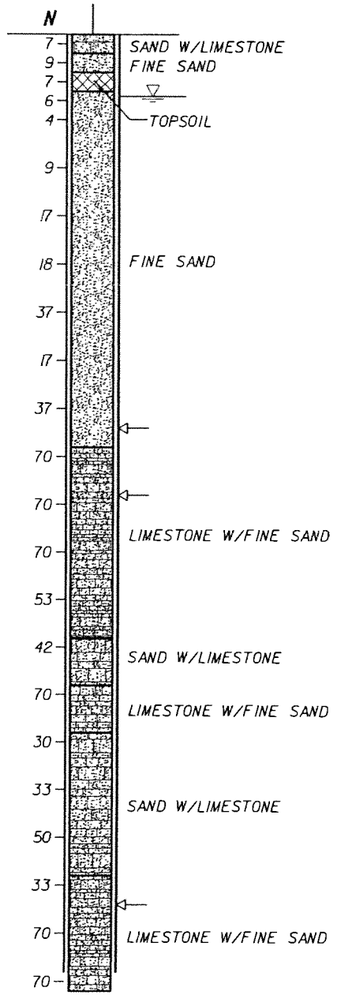

BORING TERMINATED AT 100 FT DEPTH

VERTICAL SCALE: 1"=16'

LEGEND:

- ASPHALT PAVEMENT
- (TOPSOIL) BLACK/DARK BROWN/DARK GRAY TO GRAY, SILTY SAND WITH ROOTS, ORGANICS, AND OTHER MATERIALS
- (FILL) LIMEROCK FRAGMENTS, COARSE GRAVEL TO SILT SIZE, IN SHADES OF BROWN OR GRAY, OCCASIONALLY MIXED WITH TOP SOIL
- (FINE SAND) VERY LOOSE TO VERY DENSE, FINE-SAND-SIZE MATERIAL IN SHADES OF BROWN, GRAY, OR OTHERS COLORS, OCCASIONALLY ORGANIC STAINED
- (SILTY SAND) SILTY SAND-SIZE MATERIAL IN SHADES OF BROWN/GRAY/OTHER COLORS POSSIBLY DISINTEGRATED SEDIMETARY ROCK
- (LIMESTONE WITH FINE SAND) VUGGY, SEDIMENTARY ROCK MADE OF $CaCO_3$, WITH SAND-SIZE MATERIAL, IN SHADES OF BROWN/GRAY/OTHER COLORS, OCCASIONALLY WITH SANDSTONE AND SHELL FRAGMENTS
- (SAND WITH LIMESTONE) SAND-SIZE MATERIAL WITH LIMESTONE FRAGMENTS IN SHADES OF BROWN, GRAY, OR OTHER COLORS, SOMETIMES WITH SANDSTONE FRAGMENTS
- (ORGANICS) DARK GRAY TO BLACK, SILT TO FINE-SAND-SIZE MATERIAL HAVING ORGANIC CONTENT > 5%
- (SANDSTONE WITH SAND) SEDIMENTARY ROCK MADE OF SAND-SIZE MATERIAL IN $CaCO_3$ MATRIX, IN SHADES OF BROWN OR GRAY, WITH FINE-SAND-SIZE MATERIAL
- (SAND WITH SANDSTONE) SAND-SIZE MATERIAL WITH SANDSTONE FRAGMENTS IN SHADES OF BROWN/GRAY/ OTHER COLORS
- (SANDY SILT) SANDY, SILT-SIZE MATERIAL IN SHADES OF BLACK/BROWN/GRAY, POSSIBLY DISINTEGRATED SEDIMETARY ROCK

NOTES:

- WATER TABLE AT THE TIME OF DRILLING
- N — NUMBERS TO THE LEFT OF BORINGS INDICATE SPT VALUE FOR 1 FOOT (12") PENETRATION (UNLESS OTHERWISE NOTED)
- d — DIAMETER
- t — TIME
- NA — NOT AVAILABLE
- CR — CORE RECOVERY
- RQD — ROCK QUALITY DESIGNATION
- γ — UNIT WEIGHT lb/cft
- q_u — UNCONFINED COMPRESSION AT SAMPLE DEPTH (tsf)
- q_{st} — SPLIT TENSILE STRENGTH AT SAMPLE DEPTH (tsf)
- ⟵ — LOSS OF CIRCULATION
- WOH — WEIGHT OT THE HAMMER
- CASING USED

GRANULAR MATERIALS

RELATIVE DENSITY	SAFETY HAMMER SPT N-VALUE (BLOW/FOOT)	AUTOMATIC HAMMER SPT N-VALUE (BLOW/FOOT)
VERY LOOSE	LESS THAN 4	LESS THAN 3
LOOSE	4 - 10	3 - 7
MEDIUM DENSE	10 - 30	7 - 21
DENSE	30 - 50	21 - 35
VERY DENSE	GREATER THAN 50	GREATER THAN 35

NOTES:

1. THE LIMESTONE MAY BE HARD TO EXCAVATE AND DEWATER; SPECIAL EQUIPMENT AND TOOLS MAY BE REQUIRED.
2. BORING LOCATIONS (STATIONS AND OFFSETS) BASED ON 70% PRELIMINARY ENGINEERING ALIGNMENT. SEE BORING LOCATION PLANS FOR SPECIFIC COORDINATE DATA.

ENVIRONMENTAL CLASSIFICATION

SEE THE GEOTECHNICAL REPORT

RELATION OF RQD AND IN-SITU ROCK QUALITY	
RQD (%)	ROCK QUALITY
90-100	EXCELLENT
75-90	GOOD
50-75	FAIR
25-50	POOR
0-25	VERY POOR

SK Designed by	05-06 Date				
SK/EP Drawn by	05-06 Date				
AK Checked by	05-06 Date				
Approved by	Date	No.	Date	By / Chk.	App. Revisions

NORTH CORRIDOR METRORAIL EXTENSION - PRELIMINARY ENGINEERING (100% SUBMITTAL)

MIAMI-DADE COUNTY — MIAMI-DADE TRANSIT

PARSONS
7600 CORPORATE CENTER DRIVE, SUITE 500
MIAMI, FLORIDA 33126
PHONE: (786) 464-1000 FAX: (786) 845-7119
CERTIFICATE OF AUTHORIZATION NO. 1635

Approved | Date

HP CONSULTANTS INC.
License No. 9509
ARVIND KUMBHOJKAR, PH.D. P.E.
License No. 41067
10220 SW 107 Street
Miami, Fl 33176 Ph:(305)596-1585

Approved | Date

GEOTECHNICAL

REPORT OF CORE BORINGS

Scale 1" = 16' | Drawing GE-035 | Sheet 427

5/4/2008 12:05:49 AM c:\HP\BORING_PROFILE\Rgeonc05.dgn

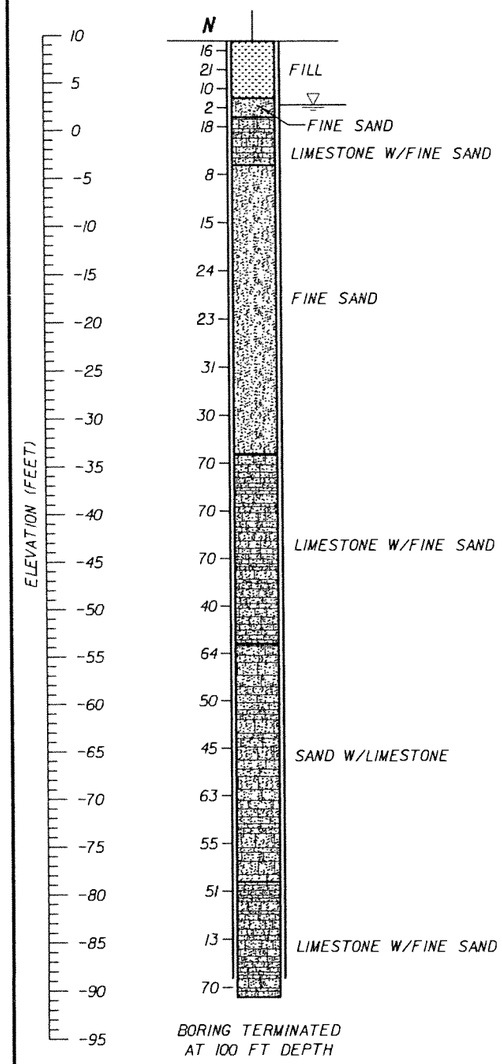

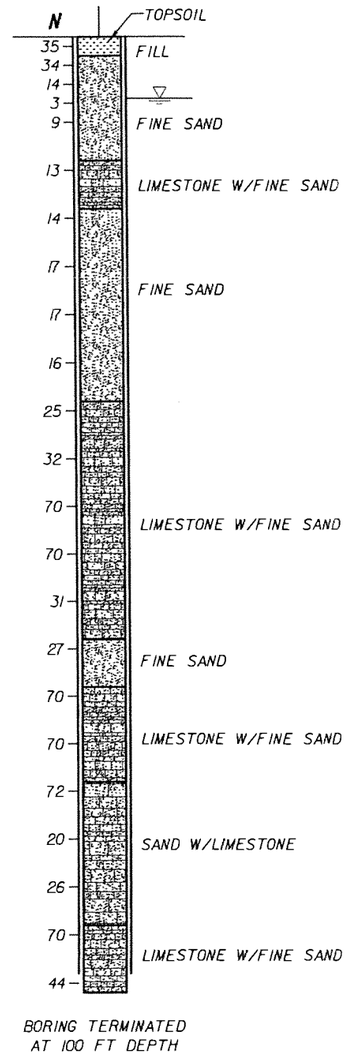

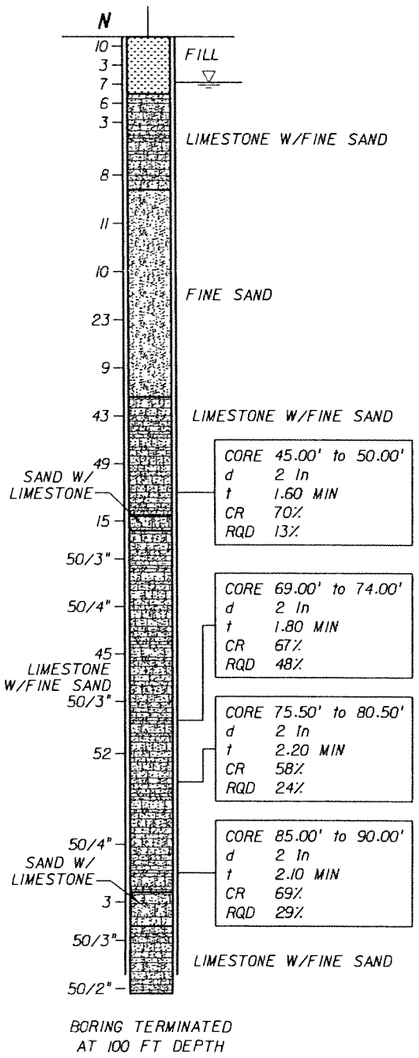

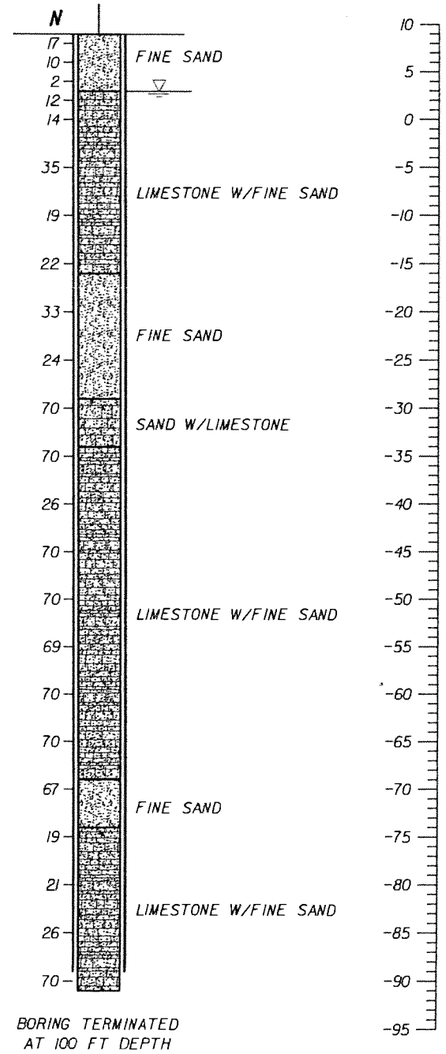

LEGEND:

- ASPHALT PAVEMENT
- (TOPSOIL) BLACK/DARK BROWN/DARK GRAY TO GRAY, SILTY SAND WITH ROOTS, ORGANICS, AND OTHER MATERIALS
- (FILL) LIMEROCK FRAGMENTS, COARSE GRAVEL TO SILT SIZE, IN SHADES OF BROWN OR GRAY, OCCASIONALLY MIXED WITH TOP SOIL
- (FINE SAND) VERY LOOSE TO VERY DENSE, FINE-SAND-SIZE MATERIAL IN SHADES OF BROWN, GRAY, OR OTHERS COLORS, OCCASIONALLY ORGANIC STAINED
- (SILTY SAND) SILTY SAND-SIZE MATERIAL IN SHADES OF BROWN/GRAY/OTHER COLORS POSSIBLY DISINTEGRATED SEDIMETARY ROCK
- (LIMESTONE WITH FINE SAND) VUGGY, SEDIMENTARY ROCK MADE OF $CaCO_3$, WITH SAND-SIZE MATERIAL, IN SHADES OF BROWN/GRAY/OTHER COLORS, OCCASIONALLY WITH SANDSTONE AND SHELL FRAGMENTS
- (SAND WITH LIMESTONE) SAND-SIZE MATERIAL WITH LIMESTONE FRAGMENTS IN SHADES OF BROWN, GRAY, OR OTHER COLORS, SOMETIMES WITH SANDSTONE FRAGMENTS
- (ORGANICS) DARK GRAY TO BLACK, SILT TO FINE-SAND-SIZE MATERIAL HAVING ORGANIC CONTENT > 5%
- (SANDSTONE WITH SAND) SEDIMENTARY ROCK MADE OF SAND-SIZE MATERIAL IN $CaCO_3$ MATRIX, IN SHADES OF BROWN OR GRAY, WITH FINE-SAND-SIZE MATERIAL
- (SAND WITH SANDSTONE) SAND-SIZE MATERIAL WITH SANDSTONE FRAGMENTS IN SHADES OF BROWN/GRAY/OTHER COLORS
- (SANDY SILT) SANDY, SILT-SIZE MATERIAL IN SHADES OF BLACK/BROWN/GRAY, POSSIBLY DISINTEGRATED SEDIMETARY ROCK

NOTES:

- WATER TABLE AT THE TIME OF DRILLING
- **N** NUMBERS TO THE LEFT OF BORINGS INDICATE SPT VALUE FOR 1 FOOT (12") PENETRATION (UNLESS OTHERWISE NOTED)
- d DIAMETER
- t TIME
- NA NOT AVAILABLE
- CR CORE RECOVERY
- RQD ROCK QUALITY DESIGNATION
- γ UNIT WEIGHT lb/cft
- q_u UNCONFINED COMPRESSION AT SAMPLE DEPTH (tsf)
- q_{st} SPLIT TENSILE STRENGTH AT SAMPLE DEPTH (tsf)
- ⟵ LOSS OF CIRCULATION
- WOH WEIGHT OT THE HAMMER
- CASING USED

NOTES:

1. THE LIMESTONE MAY BE HARD TO EXCAVATE AND DEWATER; SPECIAL EQUIPMENT AND TOOLS MAY BE REQUIRED.
2. BORING LOCATIONS (STATIONS AND OFFSETS) BASED ON 70% PRELIMINARY ENGINEERING ALIGNMENT. SEE BORING LOCATION PLANS FOR SPECIFIC COORDINATE DATA.

VERTICAL SCALE: 1"=16'

ENVIRONMENTAL CLASSIFICATION

SEE THE GEOTECHNICAL REPORT

RELATION OF RQD AND IN-SITU ROCK QUALITY

RQD (%)	ROCK QUALITY
90-100	EXCELLENT
75-90	GOOD
50-75	FAIR
25-50	POOR
0-25	VERY POOR

GRANULAR MATERIALS

RELATIVE DENSITY	SAFETY HAMMER SPT N-VALUE (BLOW/FOOT)	AUTOMATIC HAMMER SPT N-VALUE (BLOW/FOOT)
VERY LOOSE	LESS THAN 4	LESS THAN 3
LOOSE	4 - 10	3 - 7
MEDIUM DENSE	10 - 30	7 - 21
DENSE	30 - 50	21 - 35
VERY DENSE	GREATER THAN 50	GREATER THAN 35

SK	05-06				
Designed by	Date				
SK/EP	05-06				
Drawn by	Date				
AK	05-06				
Checked by	Date				
Approved by	Date	No.	Date	By / Chk	App.	Revisions

NORTH CORRIDOR METRORAIL EXTENSION - PRELIMINARY ENGINEERING (100% SUBMITTAL)

MIAMI-DADE COUNTY — MIAMI-DADE TRANSIT

PARSONS
7600 CORPORATE CENTER DRIVE, SUITE 500
MIAMI, FLORIDA 33126
PHONE: (786) 464-1000 FAX: (786) 845-7119
CERTIFICATE OF AUTHORIZATION NO. 1638

Approved / Date

HP CONSULTANTS INC.
License No. 9509
ARVIND KUMBHOJKAR, PH.D. P.E.
License No. 41067
10220 SW 107 Street
Miami, Fl 33176 Ph:(305)596-1585

Approved / Date

GEOTECHNICAL

REPORT OF CORE BORINGS

Scale 1" = 16' | Drawing GE-036 | Sheet 428

5/4/2006 12:06:30 AM c:\HP\BORING_PROFILE\Rgeonc05.dgn

BORING No.: B-61
LOCATION: 262+05.620 (69.617' LT)
ELEVATION: 7.06
HAMMER: SAFETY
TYPE OF RIG: B-53
DATE: 08/03/05

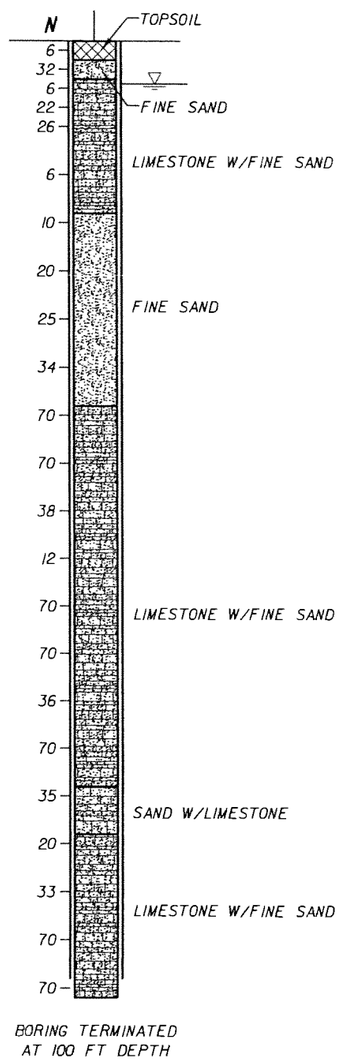

BORING TERMINATED AT 100 FT DEPTH

BORING No.: B-62
LOCATION: 265+65.576 (19.818' LT)
ELEVATION: 8.20
HAMMER: SAFETY
TYPE OF RIG: B-53
DATE: 07/22/05

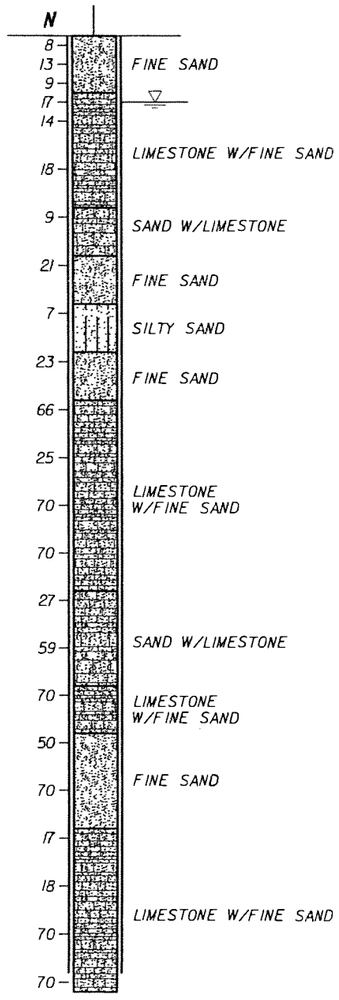

BORING TERMINATED AT 100 FT DEPTH

BORING No.: B-63
LOCATION: 267+48.662 (73.076' LT)
ELEVATION: 7.62
HAMMER: SAFETY
TYPE OF RIG: B-53
DATE: 08/10/05

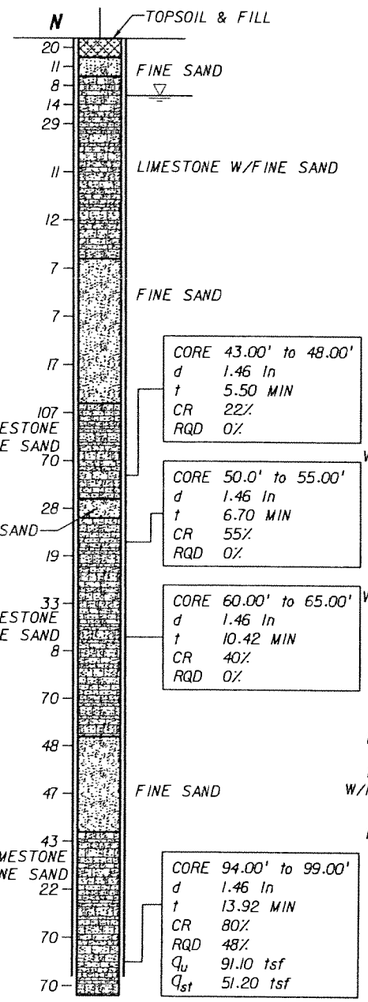

BORING TERMINATED AT 100 FT DEPTH

BORING No.: B-64
LOCATION: 271+09.621 (9.586' RT)
ELEVATION: 6.86
HAMMER: SAFETY
TYPE OF RIG: B-53
DATE: 08/09/05

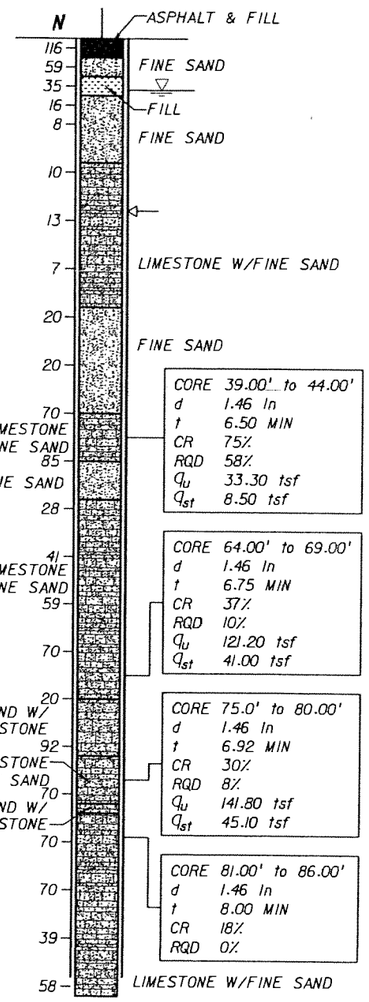

BORING TERMINATED AT 100 FT DEPTH

ELEVATION (FEET)
10 5 0 -5 -10 -15 -20 -25 -30 -35 -40 -45 -50 -55 -60 -65 -70 -75 -80 -85 -90 -95

VERTICAL SCALE: 1"=16'

LEGEND:

- ASPHALT PAVEMENT
- (TOPSOIL) BLACK/DARK BROWN/DARK GRAY TO GRAY, SILTY SAND WITH ROOTS, ORGANICS, AND OTHER MATERIALS
- (FILL) LIMEROCK FRAGMENTS, COARSE GRAVEL TO SILT SIZE, IN SHADES OF BROWN OR GRAY, OCCASIONALLY MIXED WITH TOP SOIL
- (FINE SAND) VERY LOOSE TO VERY DENSE, FINE-SAND-SIZE MATERIAL IN SHADES OF BROWN, GRAY, OR OTHERS COLORS, OCCASIONALLY ORGANIC STAINED
- (SILTY SAND) SILTY SAND-SIZE MATERIAL IN SHADES OF BROWN/GRAY/OTHER COLORS POSSIBLY DISINTEGRATED SEDIMETARY ROCK
- (LIMESTONE WITH FINE SAND) VUGGY, SEDIMENTARY ROCK MADE OF $CaCO_3$, WITH SAND-SIZE MATERIAL, IN SHADES OF BROWN/GRAY/OTHER COLORS, OCCASIONALLY WITH SANDSTONE AND SHELL FRAGMENTS
- (SAND WITH LIMESTONE) SAND-SIZE MATERIAL WITH LIMESTONE FRAGMENTS IN SHADES OF BROWN, GRAY, OR OTHER COLORS, SOMETIMES WITH SANDSTONE FRAGMENTS
- (ORGANICS) DARK GRAY TO BLACK, SILT TO FINE-SAND-SIZE MATERIAL HAVING ORGANIC CONTENT> 5%
- (SANDSTONE WITH SAND) SEDIMENTARY ROCK MADE OF SAND-SIZE MATERIAL IN $CaCO_3$ MATRIX, IN SHADES OF BROWN OR GRAY, WITH FINE-SAND-SIZE MATERIAL
- (SAND WITH SANDSTONE) SAND-SIZE MATERIAL WITH SANDSTONE FRAGMENTS IN SHADES OF BROWN/GRAY/OTHER COLORS
- (SANDY SILT) SANDY, SILT-SIZE MATERIAL IN SHADES OF BLACK/BROWN/GRAY, POSSIBLY DISINTEGRATED SEDIMETARY ROCK

NOTES:

- WATER TABLE AT THE TIME OF DRILLING
- N — NUMBERS TO THE LEFT OF BORINGS INDICATE SPT VALUE FOR 1 FOOT (12") PENETRATION (UNLESS OTHERWISE NOTED)
- d — DIAMETER
- t — TIME
- NA — NOT AVAILABLE
- CR — CORE RECOVERY
- RQD — ROCK QUALITY DESIGNATION
- δ — UNIT WEIGHT lb/cft
- q_u — UNCONFINED COMPRESSION AT SAMPLE DEPTH (tsf)
- q_{st} — SPLIT TENSILE STRENGTH AT SAMPLE DEPTH (tsf)
- ⇦ — LOSS OF CIRCULATION
- WOH — WEIGHT OT THE HAMMER
- CASING USED

NOTES:

1. THE LIMESTONE MAY BE HARD TO EXCAVATE AND DEWATER; SPECIAL EQUIPMENT AND TOOLS MAY BE REQUIRED.
2. BORING LOCATIONS (STATIONS AND OFFSETS) BASED ON 70% PRELIMINARY ENGINEERING ALIGNMENT. SEE BORING LOCATION PLANS FOR SPECIFIC COORDINATE DATA.

ENVIRONMENTAL CLASSIFICATION

SEE THE GEOTECHNICAL REPORT

RELATION OF RQD AND IN-SITU ROCK QUALITY

RQD (%)	ROCK QUALITY
90-100	EXCELLENT
75-90	GOOD
50-75	FAIR
25-50	POOR
0-25	VERY POOR

GRANULAR MATERIALS

RELATIVE DENSITY	SAFETY HAMMER SPT N-VALUE (BLOW/FOOT)	AUTOMATIC HAMMER SPT N-VALUE (BLOW/FOOT)
VERY LOOSE	LESS THAN 4	LESS THAN 3
LOOSE	4 - 10	3 - 7
MEDIUM DENSE	10 - 30	7 - 21
DENSE	30 - 50	21 - 35
VERY DENSE	GREATER THAN 50	GREATER THAN 35

SK	05-06				
Designed by	Date				
SK/EP	05-06				
Drawn by	Date				
AK	05-06				
Checked by	Date				
Approved by	Date	No.	Date	By / Chk	App. Revisions

NORTH CORRIDOR METRORAIL EXTENSION - PRELIMINARY ENGINEERING (100% SUBMITTAL)

MIAMI-DADE COUNTY — MIAMI-DADE TRANSIT

PARSONS
7600 CORPORATE CENTER DRIVE, SUITE 500
MIAMI, FLORIDA 33126
PHONE: (786) 464-1000 FAX: (786) 845-7119
CERTIFICATE OF AUTHORIZATION NO. 1838

HP CONSULTANTS INC.
License No. 9509
ARVIND KUMBHOJKAR, PH.D, P.E.
License No. 41067
10220 SW 107 Street
Miami, Fl 33176 Ph:(305)596-1585

GEOTECHNICAL

REPORT OF CORE BORINGS

Approved / Date | Approved / Date | Scale 1" = 16' | Drawing GE-037 | Sheet 429

5/4/2006 12:11:53 AM c:\HP\BORING_PROFILE\Rgeonc06.dgn

BORING No.: B-65
LOCATION: 275+06.789 (0.565' RT)
ELEVATION: 7.41
HAMMER: SAFETY
TYPE OF RIG: B-53
DATE: 08/08/05

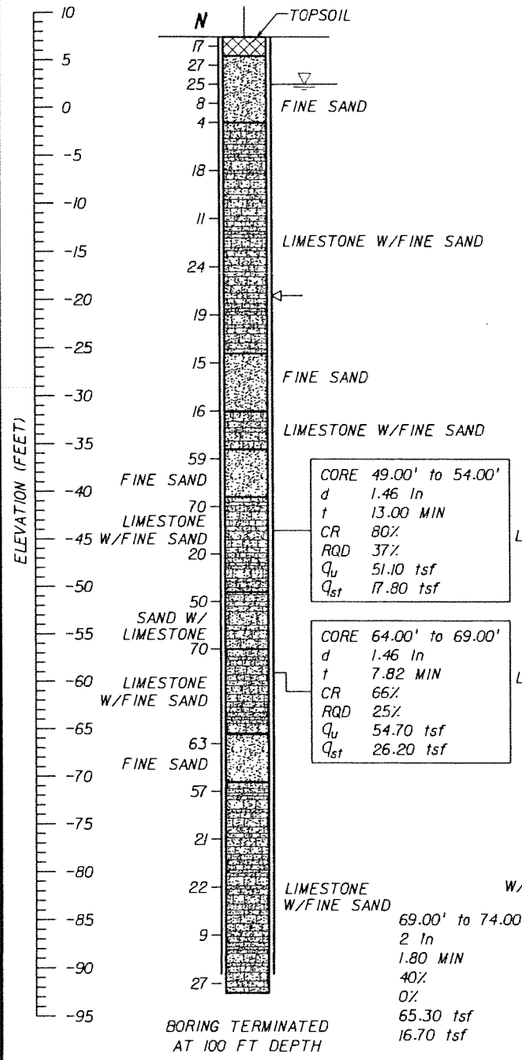

BORING No.: B-66
LOCATION: 276+42.438 (267.037' LT)
ELEVATION: 5.99
HAMMER: SAFETY
TYPE OF RIG: B-53
DATE: 08/11/05

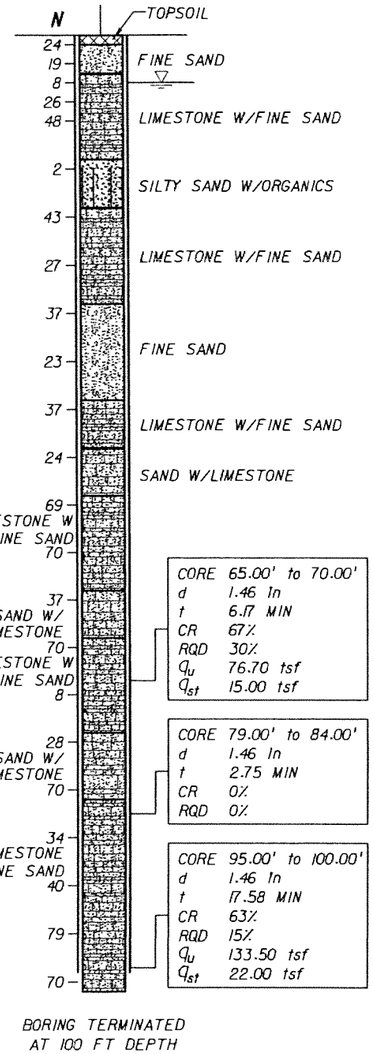

BORING No.: B-67
LOCATION: NA
ELEVATION: NA
HAMMER: SAFETY
TYPE OF RIG: B-53
DATE: 09/09/05

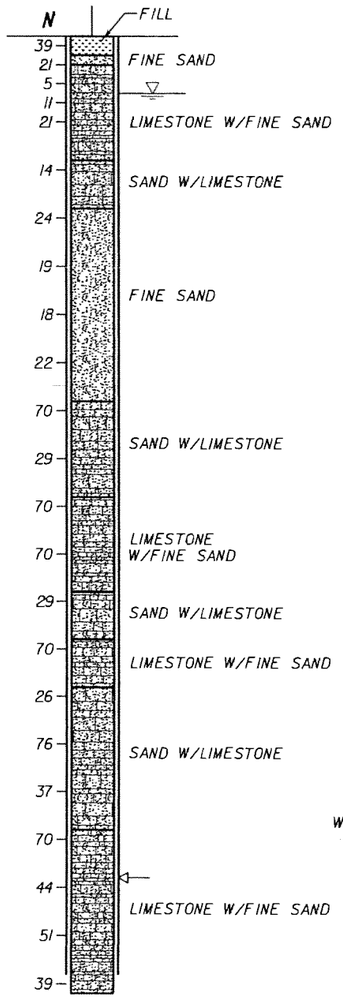

BORING No.: B-68
LOCATION: NA
ELEVATION: NA
HAMMER: SAFETY
TYPE OF RIG: B-53
DATE: 09/08/05

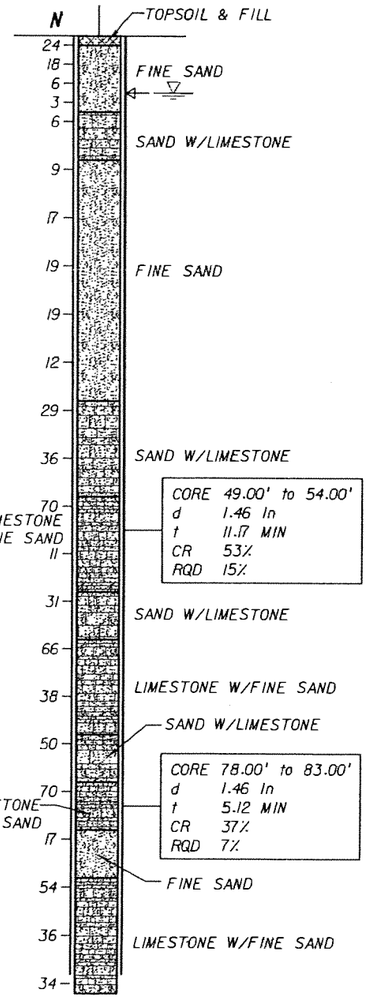

VERTICAL SCALE: 1"=16'

LEGEND:

- ASPHALT PAVEMENT
- (TOPSOIL) BLACK/DARK BROWN/DARK GRAY TO GRAY, SILTY SAND WITH ROOTS, ORGANICS, AND OTHER MATERIALS
- (FILL) LIMEROCK FRAGMENTS, COARSE GRAVEL TO SILT SIZE, IN SHADES OF BROWN OR GRAY, OCCASIONALLY MIXED WITH TOP SOIL
- (FINE SAND) VERY LOOSE TO VERY DENSE, FINE-SAND-SIZE MATERIAL IN SHADES OF BROWN, GRAY, OR OTHERS COLORS, OCCASIONALLY ORGANIC STAINED
- (SILTY SAND) SILTY SAND-SIZE MATERIAL IN SHADES OF BROWN/GRAY/OTHER COLORS POSSIBLY DISINTEGRATED SEDIMETARY ROCK
- (LIMESTONE WITH FINE SAND) VUGGY, SEDIMENTARY ROCK MADE OF $CaCO_3$, WITH SAND-SIZE MATERIAL, IN SHADES OF BROWN/GRAY/OTHER COLORS, OCCASIONALLY WITH SANDSTONE AND SHELL FRAGMENTS
- (SAND WITH LIMESTONE) SAND-SIZE MATERIAL WITH LIMESTONE FRAGMENTS IN SHADES OF BROWN, GRAY, OR OTHER COLORS, SOMETIMES WITH SANDSTONE FRAGMENTS
- (ORGANICS) DARK GRAY TO BLACK, SILT TO FINE-SAND-SIZE MATERIAL HAVING ORGANIC CONTENT> 5%
- (SANDSTONE WITH SAND) SEDIMENTARY ROCK MADE OF SAND-SIZE MATERIAL IN $CaCO_3$ MATRIX, IN SHADES OF BROWN OR GRAY, WITH FINE-SAND-SIZE MATERIAL
- (SAND WITH SANDSTONE) SAND-SIZE MATERIAL WITH SANDSTONE FRAGMENTS IN SHADES OF BROWN/GRAY/OTHER COLORS
- (SANDY SILT) SANDY, SILT-SIZE MATERIAL IN SHADES OF BLACK/BROWN/GRAY, POSSIBLY DISINTEGRATED SEDIMETARY ROCK

NOTES:

- WATER TABLE AT THE TIME OF DRILLING
- N — NUMBERS TO THE LEFT OF BORINGS INDICATE SPT VALUE FOR 1 FOOT (12") PENETRATION (UNLESS OTHERWISE NOTED)
- d — DIAMETER
- t — TIME
- NA — NOT AVAILABLE
- CR — CORE RECOVERY
- RQD — ROCK QUALITY DESIGNATION
- γ — UNIT WEIGHT lb/cft
- q_u — UNCONFINED COMPRESSION AT SAMPLE DEPTH (tsf)
- q_{st} — SPLIT TENSILE STRENGTH AT SAMPLE DEPTH (tsf)
- ⟵ — LOSS OF CIRCULATION
- WOH — WEIGHT OT THE HAMMER
- CASING USED

GRANULAR MATERIALS

RELATIVE DENSITY	SAFETY HAMMER SPT N-VALUE (BLOW/FOOT)	AUTOMATIC HAMMER SPT N-VALUE (BLOW/FOOT)
VERY LOOSE	LESS THAN 4	LESS THAN 3
LOOSE	4 - 10	3 - 7
MEDIUM DENSE	10 - 30	7 - 21
DENSE	30 - 50	21 - 35
VERY DENSE	GREATER THAN 50	GREATER THAN 35

RELATION OF RQD AND IN-SITU ROCK QUALITY

RQD (%)	ROCK QUALITY
90-100	EXCELLENT
75-90	GOOD
50-75	FAIR
25-50	POOR
0-25	VERY POOR

ENVIRONMENTAL CLASSIFICATION

SEE THE GEOTECHNICAL REPORT

NOTES:

1. THE LIMESTONE MAY BE HARD TO EXCAVATE AND DEWATER; SPECIAL EQUIPMENT AND TOOLS MAY BE REQUIRED.
2. BORING LOCATIONS (STATIONS AND OFFSETS) BASED ON 70% PRELIMINARY ENGINEERING ALIGNMENT. SEE BORING LOCATION PLANS FOR SPECIFIC COORDINATE DATA.

SK	05-06				
Designed by	Date				
SK/EP	05-06				
Drawn by	Date				
AK	05-06				
Checked by	Date				
Approved by	Date	No.	Date	By / Chk.	App. Revisions

NORTH CORRIDOR METRORAIL EXTENSION - PRELIMINARY ENGINEERING (100% SUBMITTAL)

MIAMI-DADE COUNTY

MIAMI-DADE TRANSIT

PARSONS
7600 CORPORATE CENTER DRIVE, SUITE 500
MIAMI, FLORIDA 33126
PHONE: (786) 464-1000 FAX: (786) 845-7119
CERTIFICATE OF AUTHORIZATION NO. 1838

Approved / Date

HP CONSULTANTS INC.
License No. 9509
ARVIND KUMBHOJKAR, PH.D, P.E.
License No. 41067
10220 SW 107 Street
Miami, Fl 33176 Ph:(305)596-1585

Approved / Date

GEOTECHNICAL

REPORT OF CORE BORINGS

Scale 1" = 16' | Drawing GE-038 | Sheet 430

5/4/2006 12:15:14 AM c:\HP\BORING_PROFILE\Rgeonc06.dgn

BORING No.: B-69
LOCATION: NA
ELEVATION: NA
HAMMER: SAFETY
TYPE OF RIG: B-53
DATE: 07/30/05

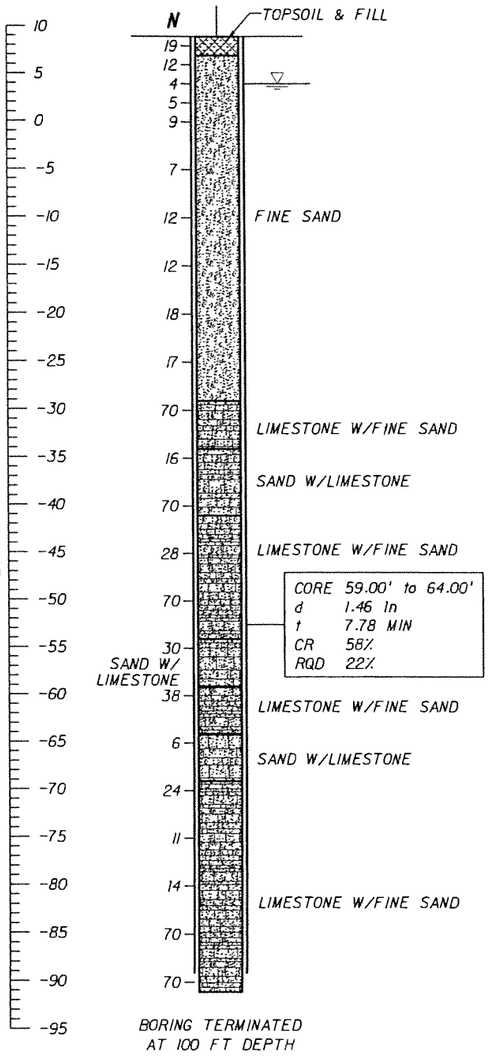

BORING TERMINATED AT 100 FT DEPTH

BORING No.: B-70
LOCATION: NA
ELEVATION: NA
HAMMER: SAFETY
TYPE OF RIG: B-53
DATE: 08/01/05

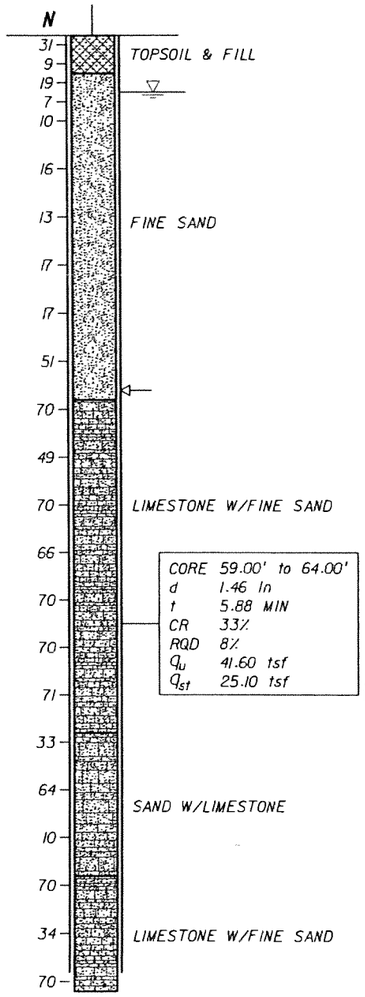

BORING TERMINATED AT 100 FT DEPTH

BORING No.: B-71
LOCATION: NA
ELEVATION: NA
HAMMER: SAFETY
TYPE OF RIG: B-53
DATE: 07/13/05

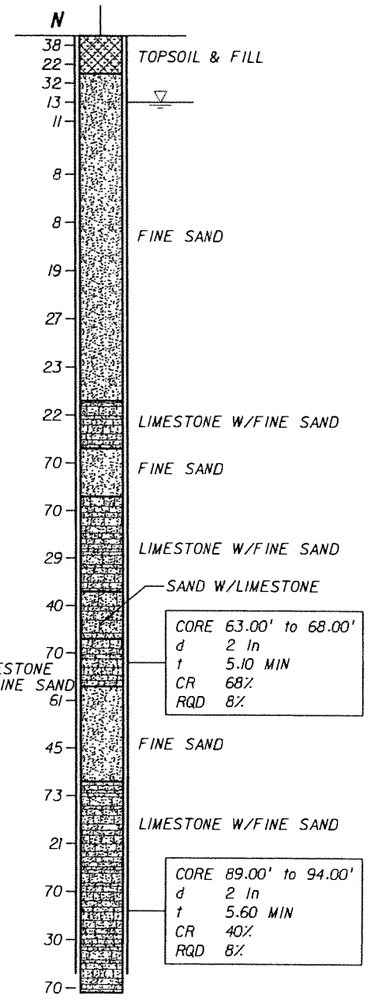

BORING TERMINATED AT 100 FT DEPTH

VERTICAL SCALE: 1"=16'

BORING No.: B-72
LOCATION: 295+46.469 (28.894' RT)
ELEVATION: 5.68
HAMMER: SAFETY
TYPE OF RIG: B-53
DATE: 07/16/05

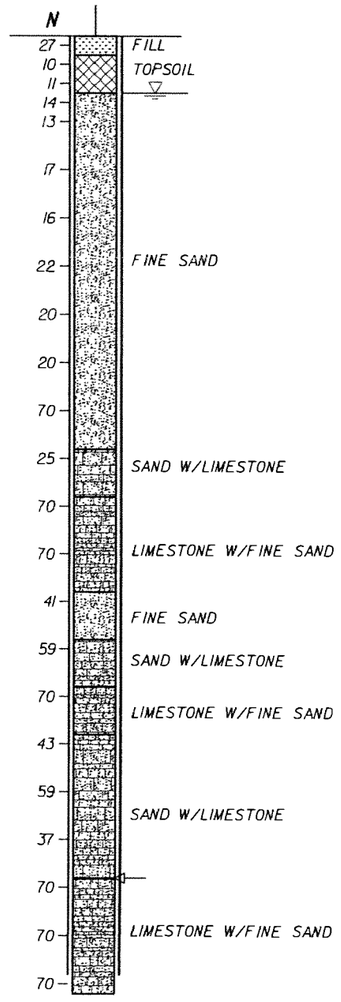

BORING TERMINATED AT 100 FT DEPTH

ENVIRONMENTAL CLASSIFICATION

SEE THE GEOTECHNICAL REPORT

LEGEND:

- ASPHALT PAVEMENT
- (TOPSOIL) BLACK/DARK BROWN/DARK GRAY TO GRAY, SILTY SAND WITH ROOTS, ORGANICS, AND OTHER MATERIALS
- (FILL) LIMEROCK FRAGMENTS, COARSE GRAVEL TO SILT SIZE, IN SHADES OF BROWN OR GRAY, OCCASIONALLY MIXED WITH TOP SOIL
- (FINE SAND) VERY LOOSE TO VERY DENSE, FINE-SAND-SIZE MATERIAL IN SHADES OF BROWN, GRAY, OR OTHERS COLORS, OCCASIONALLY ORGANIC STAINED
- (SILTY SAND) SILTY SAND-SIZE MATERIAL IN SHADES OF BROWN/GRAY/OTHER COLORS POSSIBLY DISINTEGRATED SEDIMETARY ROCK
- (LIMESTONE WITH FINE SAND) VUGGY, SEDIMENTARY ROCK MADE OF $CaCO_3$, WITH SAND-SIZE MATERIAL, IN SHADES OF BROWN/GRAY/OTHER COLORS, OCCASIONALLY WITH SANDSTONE AND SHELL FRAGMENTS
- (SAND WITH LIMESTONE) SAND-SIZE MATERIAL WITH LIMESTONE FRAGMENTS IN SHADES OF BROWN, GRAY, OR OTHER COLORS, SOMETIMES WITH SANDSTONE FRAGMENTS
- (ORGANICS) DARK GRAY TO BLACK, SILT TO FINE-SAND-SIZE MATERIAL HAVING ORGANIC CONTENT> 5%
- (SANDSTONE WITH SAND) SEDIMENTARY ROCK MADE OF SAND-SIZE MATERIAL IN $CaCO_3$ MATRIX, IN SHADES OF BROWN OR GRAY, WITH FINE-SAND-SIZE MATERIAL
- (SAND WITH SANDSTONE) SAND-SIZE MATERIAL WITH SANDSTONE FRAGMENTS IN SHADES OF BROWN/GRAY/ OTHER COLORS
- (SANDY SILT) SANDY, SILT-SIZE MATERIAL IN SHADES OF BLACK/BROWN/GRAY, POSSIBLY DISINTEGRATED SEDIMETARY ROCK

NOTES:

- WATER TABLE AT THE TIME OF DRILLING
- N — NUMBERS TO THE LEFT OF BORINGS INDICATE SPT VALUE FOR 1 FOOT (12") PENETRATION (UNLESS OTHERWISE NOTED)
- d — DIAMETER
- t — TIME
- NA — NOT AVAILABLE
- CR — CORE RECOVERY
- RQD — ROCK QUALITY DESIGNATION
- δ — UNIT WEIGHT lb/cft
- q_u — UNCONFINED COMPRESSION AT SAMPLE DEPTH (tsf)
- q_{st} — SPLIT TENSILE STRENGTH AT SAMPLE DEPTH (tsf)
- ⇦ — LOSS OF CIRCULATION
- WOH — WEIGHT OT THE HAMMER
- CASING USED

NOTES:

1. THE LIMESTONE MAY BE HARD TO EXCAVATE AND DEWATER; SPECIAL EQUIPMENT AND TOOLS MAY BE REQUIRED.
2. BORING LOCATIONS (STATIONS AND OFFSETS) BASED ON 70% PRELIMINARY ENGINEERING ALIGNMENT. SEE BORING LOCATION PLANS FOR SPECIFIC COORDINATE DATA.

RELATION OF RQD AND IN-SITU ROCK QUALITY

RQD (%)	ROCK QUALITY
90-100	EXCELLENT
75-90	GOOD
50-75	FAIR
25-50	POOR
0-25	VERY POOR

GRANULAR MATERIALS

RELATIVE DENSITY	SAFETY HAMMER SPT N-VALUE (BLOW/FOOT)	AUTOMATIC HAMMER SPT N-VALUE (BLOW/FOOT)
VERY LOOSE	LESS THAN 4	LESS THAN 3
LOOSE	4 - 10	3 - 7
MEDIUM DENSE	10 - 30	7 - 21
DENSE	30 - 50	21 - 35
VERY DENSE	GREATER THAN 50	GREATER THAN 35

SK	05-06				
Designed by	Date				
SK/EP	05-06				
Drawn by	Date				
AK	05-06				
Checked by	Date				
Approved by	Date	No.	Date	By / Chk	App.	Revisions

NORTH CORRIDOR METRORAIL EXTENSION - PRELIMINARY ENGINEERING (100% SUBMITTAL)

MIAMI-DADE COUNTY — MIAMI-DADE TRANSIT

PARSONS
7600 CORPORATE CENTER DRIVE, SUITE 500
MIAMI, FLORIDA 33126
PHONE: (786) 464-1000 FAX: (786) 845-7119
CERTIFICATE OF AUTHORIZATION NO. 1838
Approved Date

HP CONSULTANTS INC.
License No. 9509
ARVIND KUMBHOJKAR, PH.D. P.E.
License No. 41067
10220 SW 107 Street
Miami, Fl 33176 Ph:(305)596-1585
Approved Date

GEOTECHNICAL

REPORT OF CORE BORINGS

Scale 1" = 16' | Drawing GE-039 | Sheet 431

5/4/2006 12:15:57 AM c:\HP\BORING_PROFILE\Rgeonc06.dgn

BORING No.: B-73
LOCATION: 297+87.681 (28.356' LT)
ELEVATION: 4.86
HAMMER: AUTOMATIC
TYPE OF RIG: CME 55
DATE: 07/28/05

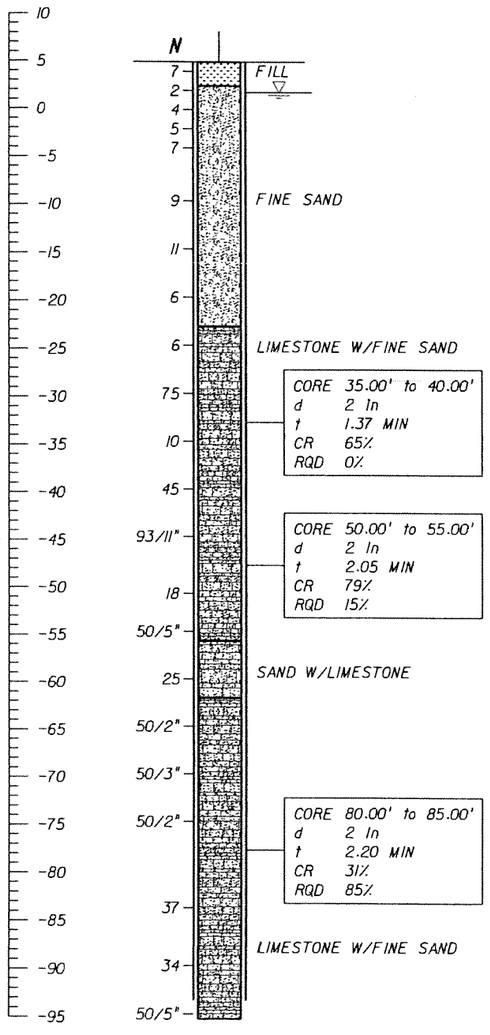

BORING TERMINATED AT 100 FT DEPTH

BORING No.: B-74
LOCATION: 300+50.803 (32.865' LT)
ELEVATION: 7.23
HAMMER: SAFETY
TYPE OF RIG: B-53
DATE: 07/19/05

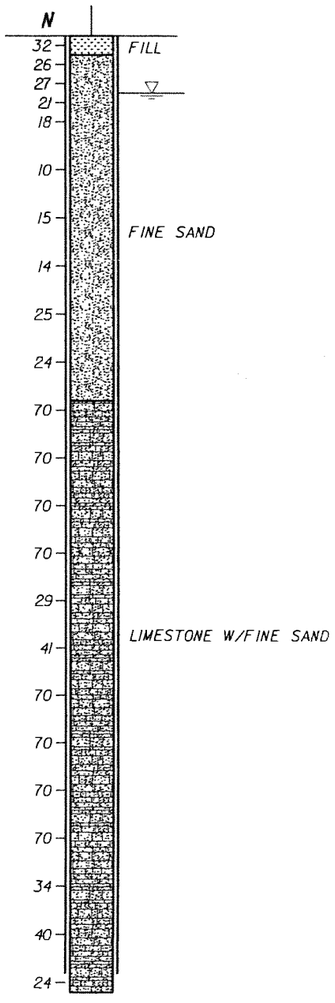

BORING TERMINATED AT 100 FT DEPTH

BORING No.: B-75
LOCATION: 302+64.032 (27.239' LT)
ELEVATION: 7.93
HAMMER: SAFETY
TYPE OF RIG: B-53
DATE: 08/03/05

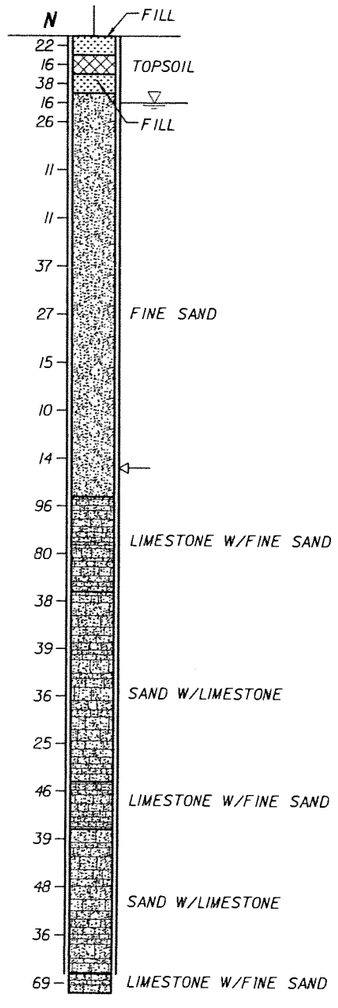

BORING TERMINATED AT 100 FT DEPTH

BORING No.: B-76
LOCATION: 306+72.436 (34.906' LT)
ELEVATION: 8.89
HAMMER: SAFETY
TYPE OF RIG: B-53
DATE: 09/12/05

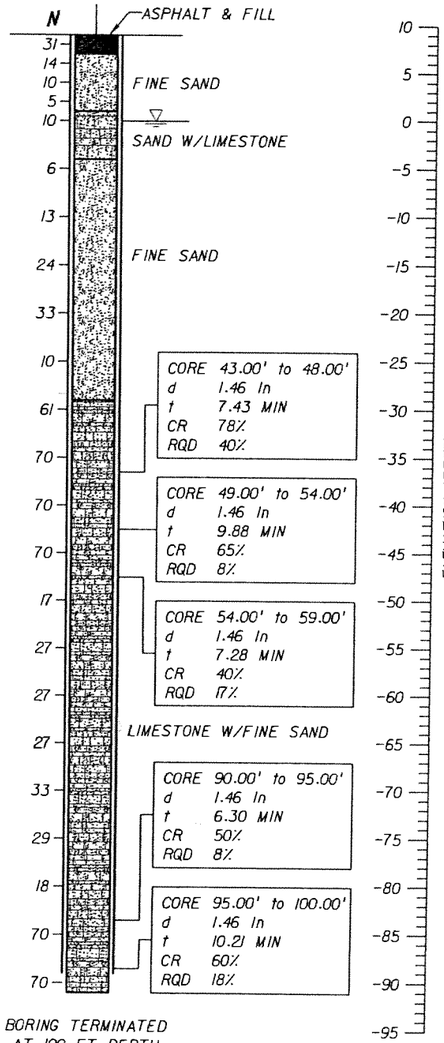

BORING TERMINATED AT 100 FT DEPTH

LEGEND:

- ASPHALT PAVEMENT
- (TOPSOIL) BLACK/DARK BROWN/DARK GRAY TO GRAY, SILTY SAND WITH ROOTS, ORGANICS, AND OTHER MATERIALS
- (FILL) LIMEROCK FRAGMENTS, COARSE GRAVEL TO SILT SIZE, IN SHADES OF BROWN OR GRAY, OCCASIONALLY MIXED WITH TOP SOIL
- (FINE SAND) VERY LOOSE TO VERY DENSE, FINE-SAND-SIZE MATERIAL IN SHADES OF BROWN, GRAY, OR OTHERS COLORS, OCCASIONALLY ORGANIC STAINED
- (SILTY SAND) SILTY SAND-SIZE MATERIAL IN SHADES OF BROWN/GRAY/OTHER COLORS POSSIBLY DISINTEGRATED SEDIMETARY ROCK
- (LIMESTONE WITH FINE SAND) VUGGY, SEDIMENTARY ROCK MADE OF $CaCO_3$, WITH SAND-SIZE MATERIAL, IN SHADES OF BROWN/GRAY/OTHER COLORS, OCCASIONALLY WITH SANDSTONE AND SHELL FRAGMENTS
- (SAND WITH LIMESTONE) SAND-SIZE MATERIAL WITH LIMESTONE FRAGMENTS IN SHADES OF BROWN, GRAY, OR OTHER COLORS, SOMETIMES WITH SANDSTONE FRAGMENTS
- (ORGANICS) DARK GRAY TO BLACK, SILT TO FINE-SAND-SIZE MATERIAL HAVING ORGANIC CONTENT> 5%
- (SANDSTONE WITH SAND) SEDIMENTARY ROCK MADE OF SAND-SIZE MATERIAL IN $CaCO_3$ MATRIX, IN SHADES OF BROWN OR GRAY, WITH FINE-SAND-SIZE MATERIAL
- (SAND WITH SANDSTONE) SAND-SIZE MATERIAL WITH SANDSTONE FRAGMENTS IN SHADES OF BROWN/GRAY/OTHER COLORS
- (SANDY SILT) SANDY, SILT-SIZE MATERIAL IN SHADES OF BLACK/BROWN/GRAY, POSSIBLY DISINTEGRATED SEDIMETARY ROCK

NOTES:

- ▽ WATER TABLE AT THE TIME OF DRILLING
- N NUMBERS TO THE LEFT OF BORINGS INDICATE SPT VALUE FOR 1 FOOT (12") PENETRATION (UNLESS OTHERWISE NOTED)
- d DIAMETER
- t TIME
- NA NOT AVAILABLE
- CR CORE RECOVERY
- RQD ROCK QUALITY DESIGNATION
- γ UNIT WEIGHT lb/cft
- q_u UNCONFINED COMPRESSION AT SAMPLE DEPTH (tsf)
- q_{st} SPLIT TENSILE STRENGTH AT SAMPLE DEPTH (tsf)
- ⇦ LOSS OF CIRCULATION
- WOH WEIGHT OT THE HAMMER
- CASING USED

NOTES:

1. THE LIMESTONE MAY BE HARD TO EXCAVATE AND DEWATER; SPECIAL EQUIPMENT AND TOOLS MAY BE REQUIRED.
2. BORING LOCATIONS (STATIONS AND OFFSETS) BASED ON 70% PRELIMINARY ENGINEERING ALIGNMENT. SEE BORING LOCATION PLANS FOR SPECIFIC COORDINATE DATA.

VERTICAL SCALE: 1"=16'

ENVIRONMENTAL CLASSIFICATION

SEE THE GEOTECHNICAL REPORT

RELATION OF RQD AND IN-SITU ROCK QUALITY

RQD (%)	ROCK QUALITY
90-100	EXCELLENT
75-90	GOOD
50-75	FAIR
25-50	POOR
0-25	VERY POOR

GRANULAR MATERIALS

RELATIVE DENSITY	SAFETY HAMMER SPT N-VALUE (BLOW/FOOT)	AUTOMATIC HAMMER SPT N-VALUE (BLOW/FOOT)
VERY LOOSE	LESS THAN 4	LESS THAN 3
LOOSE	4 - 10	3 - 7
MEDIUM DENSE	10 - 30	7 - 21
DENSE	30 - 50	21 - 35
VERY DENSE	GREATER THAN 50	GREATER THAN 35

SK	05-06				
Designed by	Date				
SK/EP	05-06				
Drawn by	Date				
AK	05-06				
Checked by	Date				
Approved by	Date	No.	Date	By / Chk	App.	Revisions

NORTH CORRIDOR METRORAIL EXTENSION - PRELIMINARY ENGINEERING (100% SUBMITTAL)

MIAMI-DADE COUNTY
MIAMI-DADE TRANSIT

PARSONS
7600 CORPORATE CENTER DRIVE, SUITE 500
MIAMI, FLORIDA 33126
PHONE: (786) 464-1000 FAX: (786) 845-7119
CERTIFICATE OF AUTHORIZATION NO. 1838
Approved Date

HP CONSULTANTS INC.
License No. 9509
ARVIND KUMBHOJKAR, PH.D. P.E.
License No. 41067
10220 SW 107 Street
Miami, Fl 33176 Ph:(305)596-1585
Approved Date

GEOTECHNICAL

REPORT OF CORE BORINGS

Scale 1" = 16' | Drawing GE-040 | Sheet 432

5/4/2006 12:26:49 AM c:\HP\BORING_PROFILE\Rgeonc07.dgn

BORING No.: B-77
LOCATION: 310+17.530 (37.664' LT)
ELEVATION: 7.82
HAMMER: SAFETY
TYPE OF RIG: B-53
DATE: 08/04/05

BORING No.: B-78
LOCATION: 311+09.101 (36.361' LT)
ELEVATION: 7.49
HAMMER: SAFETY
TYPE OF RIG: B-53
DATE: 08/05/05

BORING No.: B-79
LOCATION: 311+57.066 (3.248' LT)
ELEVATION: 7.25
HAMMER: SAFETY
TYPE OF RIG: B-53
DATE: 08/08/05

BORING No.: B-80
LOCATION: 319+67.471 (5.070' RT)
ELEVATION: 8.12
HAMMER: SAFETY
TYPE OF RIG: B-53
DATE: 08/09/05

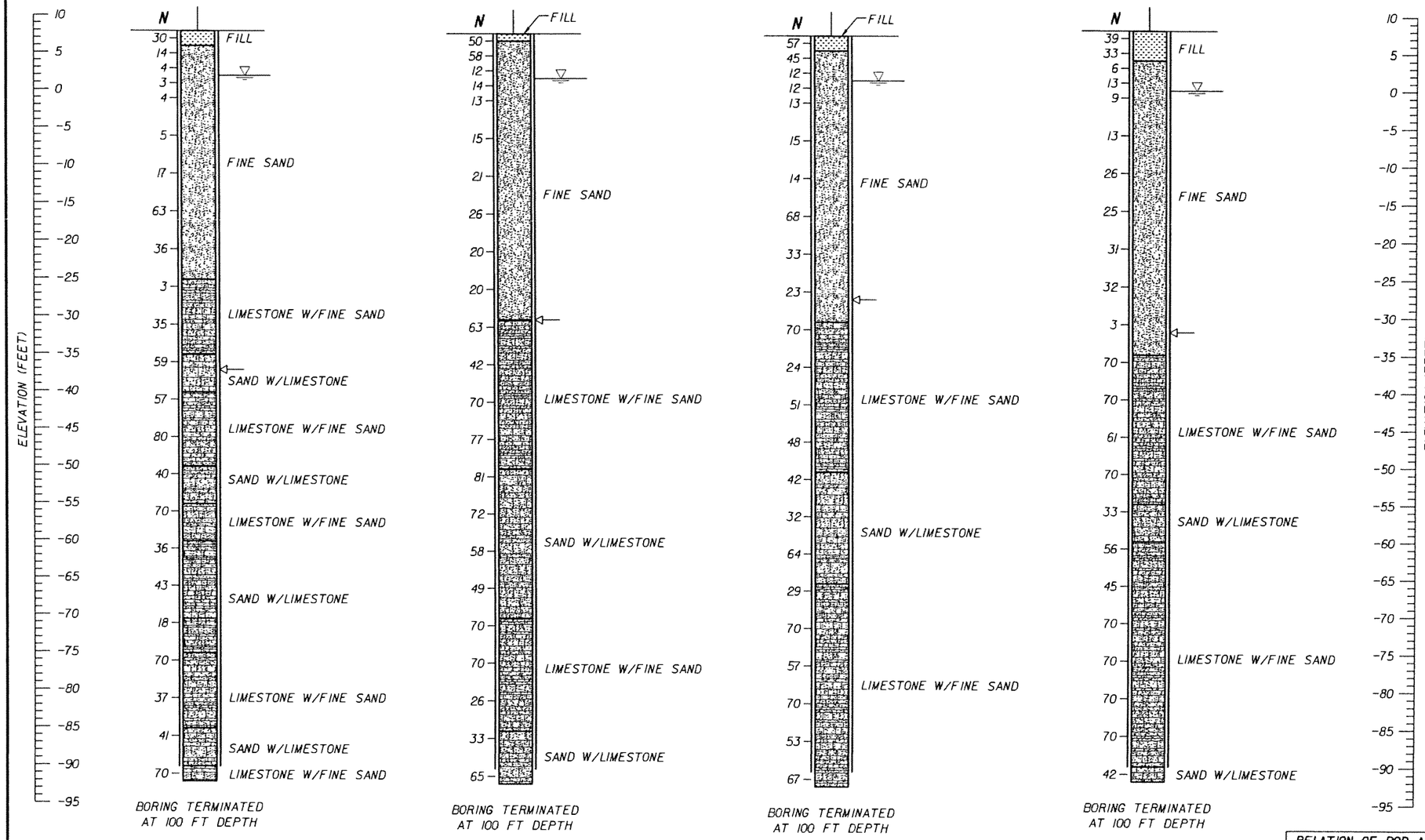

VERTICAL SCALE: 1"=16'

LEGEND:

- ASPHALT PAVEMENT
- (TOPSOIL) BLACK/DARK BROWN/DARK GRAY TO GRAY, SILTY SAND WITH ROOTS, ORGANICS, AND OTHER MATERIALS
- (FILL) LIMEROCK FRAGMENTS, COARSE GRAVEL TO SILT SIZE, IN SHADES OF BROWN OR GRAY, OCCASIONALLY MIXED WITH TOP SOIL
- (FINE SAND) VERY LOOSE TO VERY DENSE, FINE-SAND-SIZE MATERIAL IN SHADES OF BROWN, GRAY, OR OTHERS COLORS, OCCASIONALLY ORGANIC STAINED
- (SILTY SAND) SILTY SAND-SIZE MATERIAL IN SHADES OF BROWN/GRAY/OTHER COLORS POSSIBLY DISINTEGRATED SEDIMETARY ROCK
- (LIMESTONE WITH FINE SAND) VUGGY, SEDIMENTARY ROCK MADE OF $CaCO_3$, WITH SAND-SIZE MATERIAL, IN SHADES OF BROWN/GRAY/OTHER COLORS, OCCASIONALLY WITH SANDSTONE AND SHELL FRAGMENTS
- (SAND WITH LIMESTONE) SAND-SIZE MATERIAL WITH LIMESTONE FRAGMENTS IN SHADES OF BROWN, GRAY, OR OTHER COLORS, SOMETIMES WITH SANDSTONE FRAGMENTS
- (ORGANICS) DARK GRAY TO BLACK, SILT TO FINE-SAND-SIZE MATERIAL HAVING ORGANIC CONTENT> 5%
- (SANDSTONE WITH SAND) SEDIMENTARY ROCK MADE OF SAND-SIZE MATERIAL IN $CaCO_3$ MATRIX, IN SHADES OF BROWN OR GRAY, WITH FINE-SAND-SIZE MATERIAL
- (SAND WITH SANDSTONE) SAND-SIZE MATERIAL WITH SANDSTONE FRAGMENTS IN SHADES OF BROWN/GRAY/ OTHER COLORS
- (SANDY SILT) SANDY, SILT-SIZE MATERIAL IN SHADES OF BLACK/BROWN/GRAY, POSSIBLY DISINTEGRATED SEDIMETARY ROCK

NOTES:

- WATER TABLE AT THE TIME OF DRILLING
- N — NUMBERS TO THE LEFT OF BORINGS INDICATE SPT VALUE FOR 1 FOOT (12") PENETRATION (UNLESS OTHERWISE NOTED)
- d — DIAMETER
- t — TIME
- NA — NOT AVAILABLE
- CR — CORE RECOVERY
- RQD — ROCK QUALITY DESIGNATION
- γ — UNIT WEIGHT lb/cft
- q_u — UNCONFINED COMPRESSION AT SAMPLE DEPTH (tsf)
- q_{st} — SPLIT TENSILE STRENGTH AT SAMPLE DEPTH (tsf)
- ⟵ — LOSS OF CIRCULATION
- WOH — WEIGHT OT THE HAMMER
- CASING USED

GRANULAR MATERIALS

RELATIVE DENSITY	SAFETY HAMMER SPT N-VALUE (BLOW/FOOT)	AUTOMATIC HAMMER SPT N-VALUE (BLOW/FOOT)
VERY LOOSE	LESS THAN 4	LESS THAN 3
LOOSE	4 - 10	3 - 7
MEDIUM DENSE	10 - 30	7 - 21
DENSE	30 - 50	21 - 35
VERY DENSE	GREATER THAN 50	GREATER THAN 35

RELATION OF RQD AND IN-SITU ROCK QUALITY

RQD (%)	ROCK QUALITY
90-100	EXCELLENT
75-90	GOOD
50-75	FAIR
25-50	POOR
0-25	VERY POOR

ENVIRONMENTAL CLASSIFICATION

SEE THE GEOTECHNICAL REPORT

NOTES:

1. THE LIMESTONE MAY BE HARD TO EXCAVATE AND DEWATER; SPECIAL EQUIPMENT AND TOOLS MAY BE REQUIRED.
2. BORING LOCATIONS (STATIONS AND OFFSETS) BASED ON 70% PRELIMINARY ENGINEERING ALIGNMENT. SEE BORING LOCATION PLANS FOR SPECIFIC COORDINATE DATA.

SK	05-06				
Designed by	Date				
SK/EP	05-06				
Drawn by	Date				
AK	05-06				
Checked by	Date				
Approved by	Date	No.	Date	By / Chk	App.	Revisions

NORTH CORRIDOR METRORAIL EXTENSION - PRELIMINARY ENGINEERING (100% SUBMITTAL)

MIAMI-DADE COUNTY — MIAMI-DADE TRANSIT

PARSONS
7600 CORPORATE CENTER DRIVE, SUITE 500
MIAMI, FLORIDA 33126
PHONE: (786) 464-1000 FAX: (786) 845-7119
CERTIFICATE OF AUTHORIZATION NO. 1838

Approved | Date

HP CONSULTANTS INC.
License No. 9509
ARVIND KUMBHOJKAR, PH.D. P.E.
License No. 41067
10220 SW 107 Street
Miami, Fl 33176 Ph:(305)596-1585

Approved | Date

GEOTECHNICAL

REPORT OF CORE BORINGS

Scale 1" = 16' | Drawing GE-041 | Sheet 423

5/4/2006 1:33:28 AM c:\HP\BORING_PROFILE\Rgeonc07.dgn

BORING No.: B-81
LOCATION: 321+54.766 (20.547' LT)
ELEVATION: 8.02
HAMMER: SAFETY
TYPE OF RIG: B-53
DATE: 09/12/05

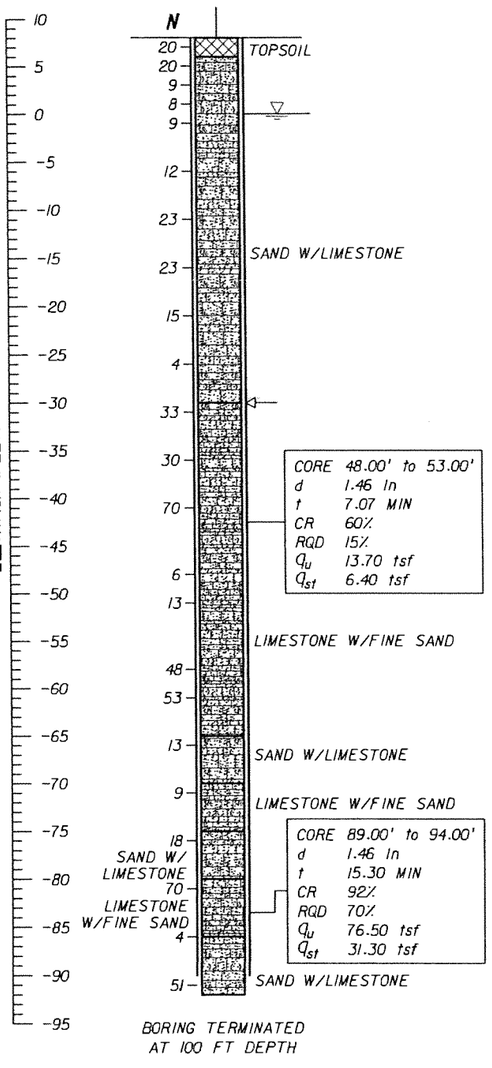

BORING TERMINATED AT 100 FT DEPTH

BORING No.: B-82
LOCATION: 324+38.245 (48.544' LT)
ELEVATION: 7.43
HAMMER: SAFETY
TYPE OF RIG: B-53
DATE: 08/15/05

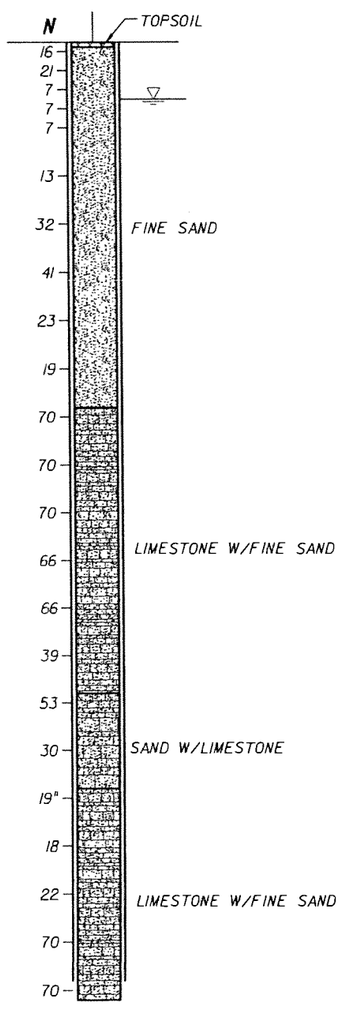

BORING TERMINATED AT 100 FT DEPTH

BORING No.: B-83
LOCATION: 327+20.311 (57.827' RT)
ELEVATION: 8.30
HAMMER: SAFETY
TYPE OF RIG: B-53
DATE: 08/20/05

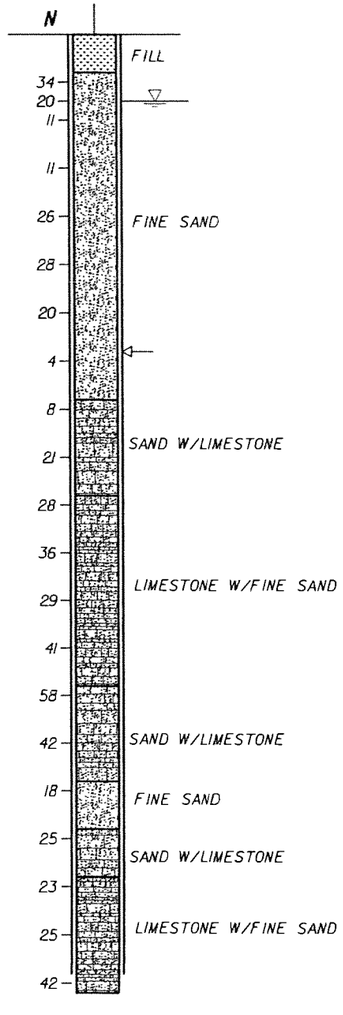

BORING TERMINATED AT 100 FT DEPTH

BORING No.: B-84
LOCATION: 329+59.351 (42.859' LT)
ELEVATION: 8.78
HAMMER: SAFETY
TYPE OF RIG: B-53
DATE: 08/16/05

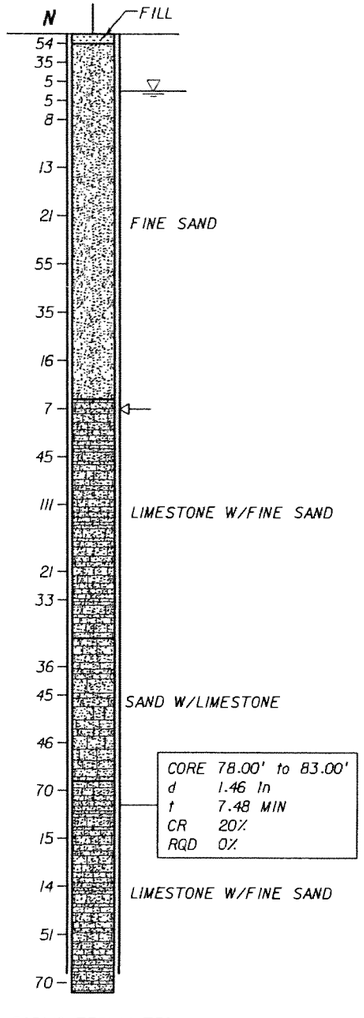

BORING TERMINATED AT 100 FT DEPTH

LEGEND:

- ASPHALT PAVEMENT
- (TOPSOIL) BLACK/DARK BROWN/DARK GRAY TO GRAY, SILTY SAND WITH ROOTS, ORGANICS, AND OTHER MATERIALS
- (FILL) LIMEROCK FRAGMENTS, COARSE GRAVEL TO SILT SIZE, IN SHADES OF BROWN OR GRAY, OCCASIONALLY MIXED WITH TOP SOIL
- (FINE SAND) VERY LOOSE TO VERY DENSE, FINE-SAND-SIZE MATERIAL IN SHADES OF BROWN, GRAY, OR OTHERS COLORS, OCCASIONALLY ORGANIC STAINED
- (SILTY SAND) SILTY SAND-SIZE MATERIAL IN SHADES OF BROWN/GRAY/OTHER COLORS POSSIBLY DISINTEGRATED SEDIMETARY ROCK
- (LIMESTONE WITH FINE SAND) VUGGY, SEDIMENTARY ROCK MADE OF $CaCO_3$, WITH SAND-SIZE MATERIAL, IN SHADES OF BROWN/GRAY/OTHER COLORS, OCCASIONALLY WITH SANDSTONE AND SHELL FRAGMENTS
- (SAND WITH LIMESTONE) SAND-SIZE MATERIAL WITH LIMESTONE FRAGMENTS IN SHADES OF BROWN, GRAY, OR OTHER COLORS, SOMETIMES WITH SANDSTONE FRAGMENTS
- (ORGANICS) DARK GRAY TO BLACK, SILT TO FINE-SAND-SIZE MATERIAL HAVING ORGANIC CONTENT > 5%
- (SANDSTONE WITH SAND) SEDIMENTARY ROCK MADE OF SAND-SIZE MATERIAL IN $CaCO_3$ MATRIX, IN SHADES OF BROWN OR GRAY, WITH FINE-SAND-SIZE MATERIAL
- (SAND WITH SANDSTONE) SAND-SIZE MATERIAL WITH SANDSTONE FRAGMENTS IN SHADES OF BROWN/GRAY/OTHER COLORS
- (SANDY SILT) SANDY, SILT-SIZE MATERIAL IN SHADES OF BLACK/BROWN/GRAY, POSSIBLY DISINTEGRATED SEDIMETARY ROCK

NOTES:

- WATER TABLE AT THE TIME OF DRILLING
- **N** NUMBERS TO THE LEFT OF BORINGS INDICATE SPT VALUE FOR 1 FOOT (12") PENETRATION (UNLESS OTHERWISE NOTED)
- d DIAMETER
- t TIME
- NA NOT AVAILABLE
- CR CORE RECOVERY
- RQD ROCK QUALITY DESIGNATION
- γ UNIT WEIGHT lb/cft
- q_u UNCONFINED COMPRESSION AT SAMPLE DEPTH (tsf)
- q_{st} SPLIT TENSILE STRENGTH AT SAMPLE DEPTH (tsf)
- ⟵ LOSS OF CIRCULATION
- WOH WEIGHT OT THE HAMMER
- CASING USED

GRANULAR MATERIALS

RELATIVE DENSITY	SAFETY HAMMER SPT N-VALUE (BLOW/FOOT)	AUTOMATIC HAMMER SPT N-VALUE (BLOW/FOOT)
VERY LOOSE	LESS THAN 4	LESS THAN 3
LOOSE	4 - 10	3 - 7
MEDIUM DENSE	10 - 30	7 - 21
DENSE	30 - 50	21 - 35
VERY DENSE	GREATER THAN 50	GREATER THAN 35

NOTES:

1. THE LIMESTONE MAY BE HARD TO EXCAVATE AND DEWATER; SPECIAL EQUIPMENT AND TOOLS MAY BE REQUIRED.
2. BORING LOCATIONS (STATIONS AND OFFSETS) BASED ON 70% PRELIMINARY ENGINEERING ALIGNMENT. SEE BORING LOCATION PLANS FOR SPECIFIC COORDINATE DATA.

VERTICAL SCALE: 1"=16'

ENVIRONMENTAL CLASSIFICATION

SEE THE GEOTECHNICAL REPORT

RELATION OF RQD AND IN-SITU ROCK QUALITY	
RQD (%)	ROCK QUALITY
90-100	EXCELLENT
75-90	GOOD
50-75	FAIR
25-50	POOR
0-25	VERY POOR

SK	05-06					
Designed by	Date					
SK/EP	05-06					
Drawn by	Date					
AK	05-06					
Checked by	Date					
Approved by	Date	No.	Date	By / Chk	App.	Revisions

NORTH CORRIDOR METRORAIL EXTENSION - PRELIMINARY ENGINEERING (100% SUBMITTAL)

MIAMI-DADE COUNTY — MIAMI-DADE TRANSIT

PARSONS
7600 CORPORATE CENTER DRIVE, SUITE 500
MIAMI, FLORIDA 33126
PHONE: (786) 464-1000 FAX: (786) 845-7119
CERTIFICATE OF AUTHORIZATION NO. 1838

Approved | Date

HP CONSULTANTS INC.
License No. 9509
ARVIND KUMBHOJKAR, PH.D. P.E.
License No. 41067
10220 SW 107 Street
Miami, Fl 33176 Ph:(305)596-1585

Approved | Date

GEOTECHNICAL

REPORT OF CORE BORINGS

Scale 1" = 16' | Drawing GE-042 | Sheet 434

5/4/2006 1:40:51 AM c:\HP\BORING_PROFILE\Rgeonc07.dgn

BORING No.:	B-85
LOCATION:	332+08.4719 (48.597' LT)
ELEVATION:	9.47
HAMMER:	SAFETY
TYPE OF RIG:	B-53
DATE:	08/17/05

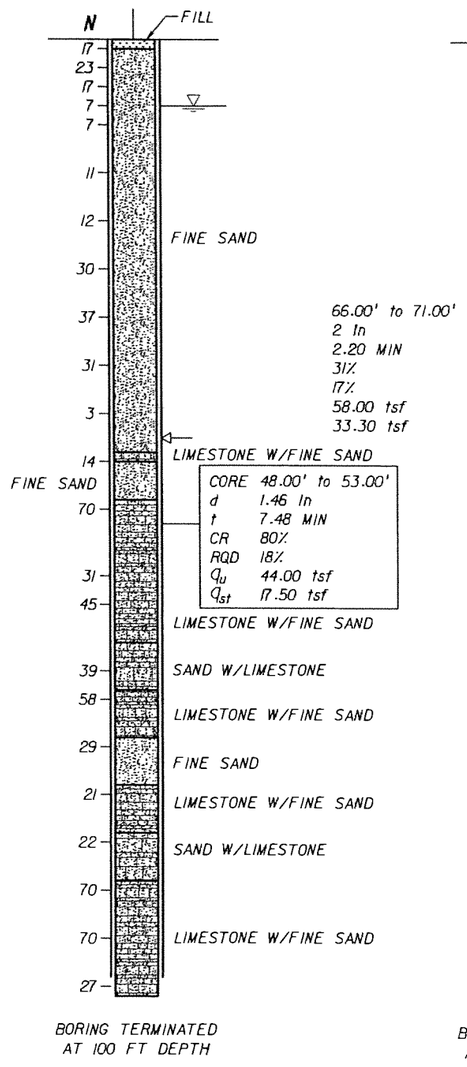

BORING TERMINATED AT 100 FT DEPTH

BORING No.:	B-86
LOCATION:	334+41.294 (40.660' LT)
ELEVATION:	9.18
HAMMER:	SAFETY
TYPE OF RIG:	B-53
DATE:	08/17/05

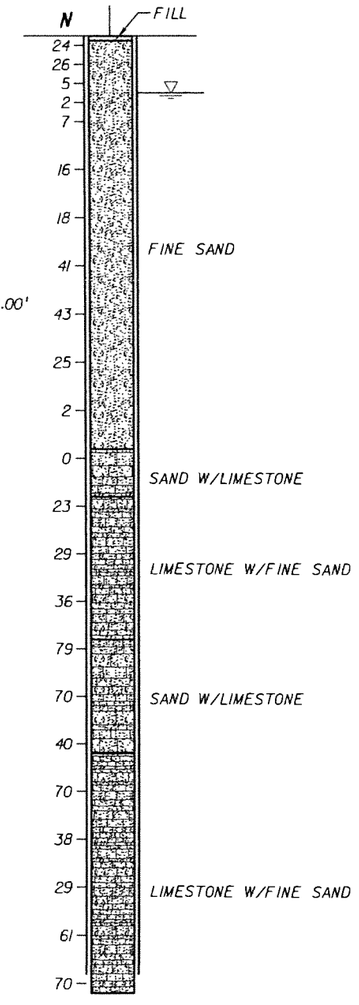

BORING TERMINATED AT 100 FT DEPTH

BORING No.:	B-87
LOCATION:	335+00.148 (32.480' LT)
ELEVATION:	9.53
HAMMER:	SAFETY
TYPE OF RIG:	B-53
DATE:	09/10/05

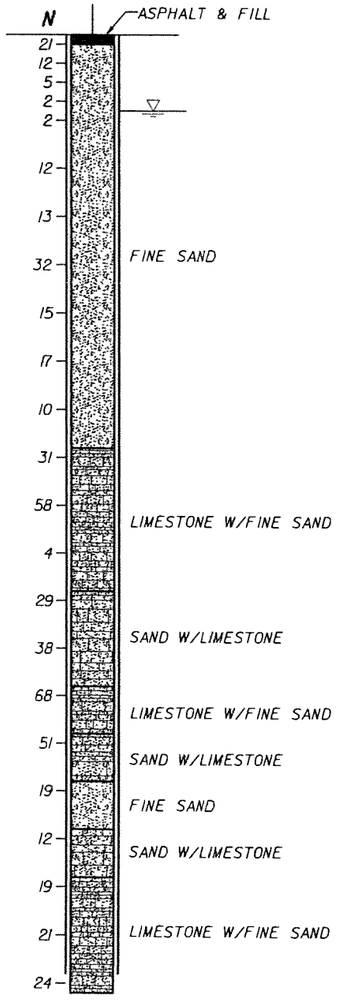

BORING TERMINATED AT 100 FT DEPTH

BORING No.:	B-88
LOCATION:	339+48.194 (40.817' LT)
ELEVATION:	8.77
HAMMER:	SAFETY
TYPE OF RIG:	B-53
DATE:	08/19/05

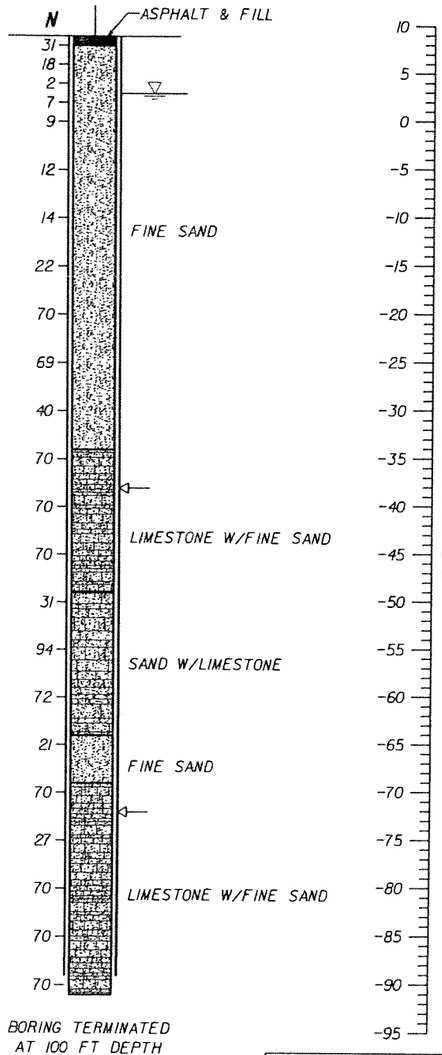

BORING TERMINATED AT 100 FT DEPTH

LEGEND:

- ASPHALT PAVEMENT
- (TOPSOIL) BLACK/DARK BROWN/DARK GRAY TO GRAY, SILTY SAND WITH ROOTS, ORGANICS, AND OTHER MATERIALS
- (FILL) LIMEROCK FRAGMENTS, COARSE GRAVEL TO SILT SIZE, IN SHADES OF BROWN OR GRAY, OCCASIONALLY MIXED WITH TOP SOIL
- (FINE SAND) VERY LOOSE TO VERY DENSE, FINE-SAND-SIZE MATERIAL IN SHADES OF BROWN, GRAY, OR OTHERS COLORS, OCCASIONALLY ORGANIC STAINED
- (SILTY SAND) SILTY SAND-SIZE MATERIAL IN SHADES OF BROWN/GRAY/OTHER COLORS POSSIBLY DISINTEGRATED SEDIMETARY ROCK
- (LIMESTONE WITH FINE SAND) VUGGY, SEDIMENTARY ROCK MADE OF $CaCO_3$, WITH SAND-SIZE MATERIAL, IN SHADES OF BROWN/GRAY/OTHER COLORS, OCCASIONALLY WITH SANDSTONE AND SHELL FRAGMENTS
- (SAND WITH LIMESTONE) SAND-SIZE MATERIAL WITH LIMESTONE FRAGMENTS IN SHADES OF BROWN, GRAY, OR OTHER COLORS, SOMETIMES WITH SANDSTONE FRAGMENTS
- (ORGANICS) DARK GRAY TO BLACK, SILT TO FINE-SAND-SIZE MATERIAL HAVING ORGANIC CONTENT> 5%
- (SANDSTONE WITH SAND) SEDIMENTARY ROCK MADE OF SAND-SIZE MATERIAL IN $CaCO_3$ MATRIX, IN SHADES OF BROWN OR GRAY, WITH FINE-SAND-SIZE MATERIAL
- (SAND WITH SANDSTONE) SAND-SIZE MATERIAL WITH SANDSTONE FRAGMENTS IN SHADES OF BROWN/GRAY/OTHER COLORS
- (SANDY SILT) SANDY, SILT-SIZE MATERIAL IN SHADES OF BLACK/BROWN/GRAY, POSSIBLY DISINTEGRATED SEDIMETARY ROCK

NOTES:

- WATER TABLE AT THE TIME OF DRILLING
- N — NUMBERS TO THE LEFT OF BORINGS INDICATE SPT VALUE FOR 1 FOOT (12") PENETRATION (UNLESS OTHERWISE NOTED)
- d — DIAMETER
- t — TIME
- NA — NOT AVAILABLE
- CR — CORE RECOVERY
- RQD — ROCK QUALITY DESIGNATION
- γ_d — UNIT WEIGHT lb/cft
- q_u — UNCONFINED COMPRESSION AT SAMPLE DEPTH (tsf)
- q_{st} — SPLIT TENSILE STRENGTH AT SAMPLE DEPTH (tsf)
- ⟵ — LOSS OF CIRCULATION
- WOH — WEIGHT OT THE HAMMER
- CASING USED

NOTES:

1. THE LIMESTONE MAY BE HARD TO EXCAVATE AND DEWATER; SPECIAL EQUIPMENT AND TOOLS MAY BE REQUIRED.
2. BORING LOCATIONS (STATIONS AND OFFSETS) BASED ON 70% PRELIMINARY ENGINEERING ALIGNMENT. SEE BORING LOCATION PLANS FOR SPECIFIC COORDINATE DATA.

VERTICAL SCALE: 1"=16'

ENVIRONMENTAL CLASSIFICATION

SEE THE GEOTECHNICAL REPORT

RELATION OF RQD AND IN-SITU ROCK QUALITY	
RQD (%)	ROCK QUALITY
90-100	EXCELLENT
75-90	GOOD
50-75	FAIR
25-50	POOR
0-25	VERY POOR

GRANULAR MATERIALS

RELATIVE DENSITY	SAFETY HAMMER SPT N-VALUE (BLOW/FOOT)	AUTOMATIC HAMMER SPT N-VALUE (BLOW/FOOT)
VERY LOOSE	LESS THAN 4	LESS THAN 3
LOOSE	4 - 10	3 - 7
MEDIUM DENSE	10 - 30	7 - 21
DENSE	30 - 50	21 - 35
VERY DENSE	GREATER THAN 50	GREATER THAN 35

SK	05-06				
Designed by	Date				
SK/EP	05-06				
Drawn by	Date				
AK	05-06				
Checked by	Date				
Approved by	Date	No.	Date	By / Chk	App.	Revisions

NORTH CORRIDOR METRORAIL EXTENSION - PRELIMINARY ENGINEERING (100% SUBMITTAL)

MIAMI-DADE COUNTY — MIAMI-DADE TRANSIT

PARSONS
7600 CORPORATE CENTER DRIVE, SUITE 500
MIAMI, FLORIDA 33126
PHONE: (786) 464-1000 FAX: (786) 845-7119
CERTIFICATE OF AUTHORIZATION NO. 1838

HP CONSULTANTS INC.
License No. 9509
ARVIND KUMBHOJKAR, PH.D, P.E.
License No. 41067
10220 SW 107 Street
Miami, Fl 33176 Ph:(305)596-1585

Approved | Date | Approved | Date

GEOTECHNICAL

REPORT OF CORE BORINGS

Scale 1" = 16' | Drawing GE-043 | Sheet 4 of 25

5/4/2006 1:42:04 AM c:\HP\BORING_PROFILE\Rgeonc08.dgn

BORING No.: B-89
LOCATION: 342+20.459 (26.059' LT)
ELEVATION: 8.60
HAMMER: SAFETY
TYPE OF RIG: B-53
DATE: 08/22/05

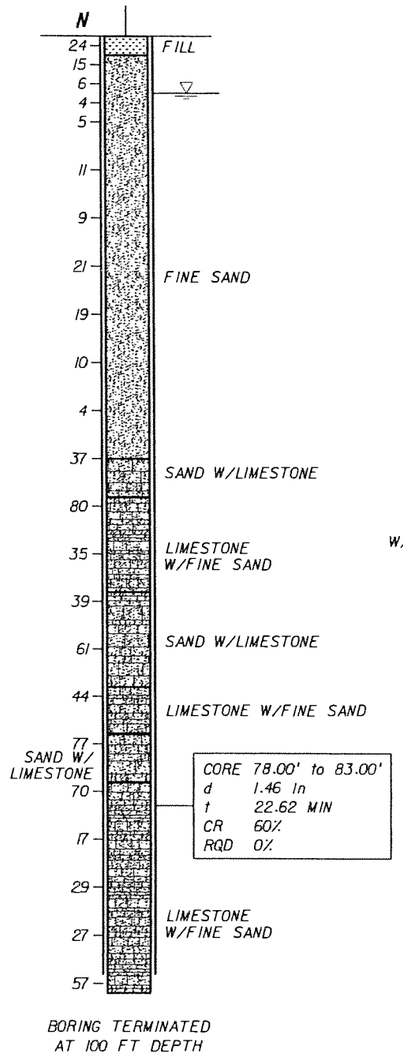

BORING No.: B-90
LOCATION: 344+73.761 (18.948' LT)
ELEVATION: 8.66
HAMMER: SAFETY
TYPE OF RIG: B-53
DATE: 08/23/05

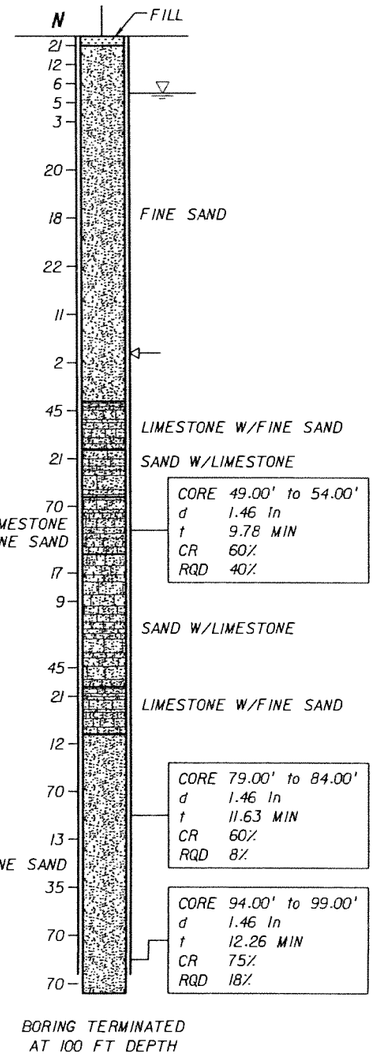

BORING No.: B-91
LOCATION: 645+76.710 (4.838' RT)
ELEVATION: 8.59
HAMMER: SAFETY
TYPE OF RIG: B-53
DATE: 08/23/05

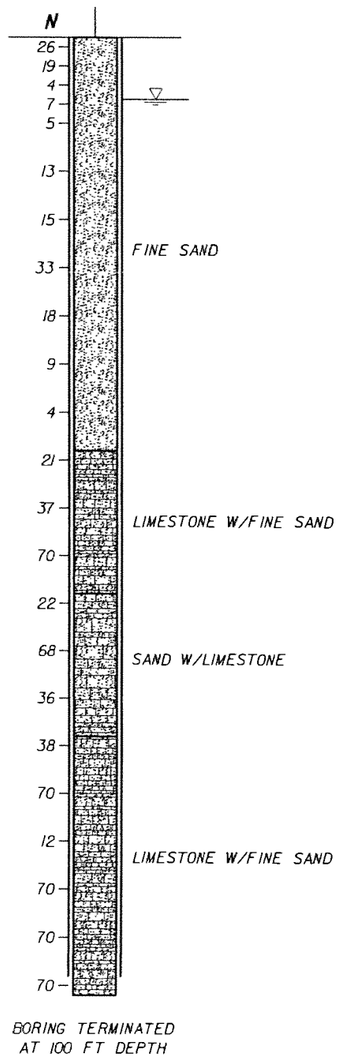

BORING No.: B-92
LOCATION: 348+67.837 (2.071' RT)
ELEVATION: 8.68
HAMMER: SAFETY
TYPE OF RIG: B-53
DATE: 07/02/05

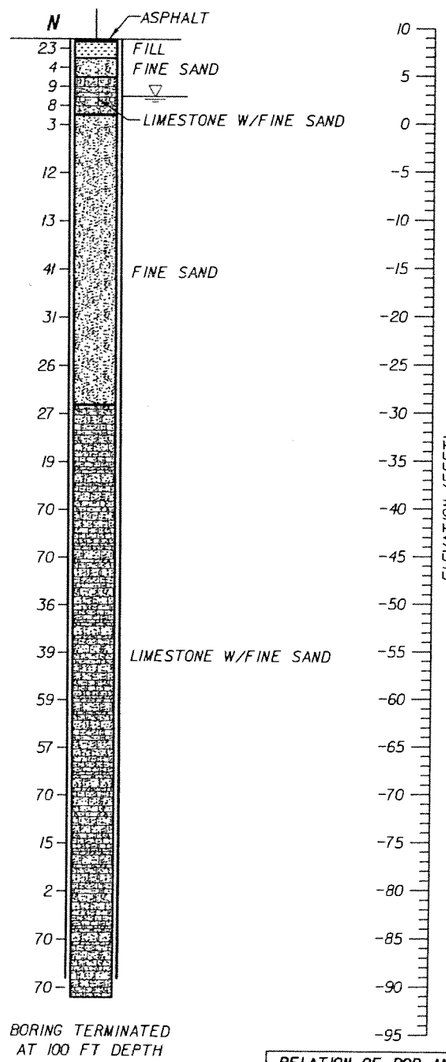

LEGEND:

- ASPHALT PAVEMENT
- (TOPSOIL) BLACK/DARK BROWN/DARK GRAY TO GRAY, SILTY SAND WITH ROOTS, ORGANICS, AND OTHER MATERIALS
- (FILL) LIMEROCK FRAGMENTS, COARSE GRAVEL TO SILT SIZE, IN SHADES OF BROWN OR GRAY, OCCASIONALLY MIXED WITH TOP SOIL
- (FINE SAND) VERY LOOSE TO VERY DENSE, FINE-SAND-SIZE MATERIAL IN SHADES OF BROWN, GRAY, OR OTHERS COLORS, OCCASIONALLY ORGANIC STAINED
- (SILTY SAND) SILTY SAND-SIZE MATERIAL IN SHADES OF BROWN/GRAY/OTHER COLORS POSSIBLY DISINTEGRATED SEDIMETARY ROCK
- (LIMESTONE WITH FINE SAND) VUGGY, SEDIMENTARY ROCK MADE OF $CaCO_3$, WITH SAND-SIZE MATERIAL, IN SHADES OF BROWN/GRAY/OTHER COLORS, OCCASIONALLY WITH SANDSTONE AND SHELL FRAGMENTS
- (SAND WITH LIMESTONE) SAND-SIZE MATERIAL WITH LIMESTONE FRAGMENTS IN SHADES OF BROWN, GRAY, OR OTHER COLORS, SOMETIMES WITH SANDSTONE FRAGMENTS
- (ORGANICS) DARK GRAY TO BLACK, SILT TO FINE-SAND-SIZE MATERIAL HAVING ORGANIC CONTENT > 5%
- (SANDSTONE WITH SAND) SEDIMENTARY ROCK MADE OF SAND-SIZE MATERIAL IN $CaCO_3$ MATRIX, IN SHADES OF BROWN OR GRAY, WITH FINE-SAND-SIZE MATERIAL
- (SAND WITH SANDSTONE) SAND-SIZE MATERIAL WITH SANDSTONE FRAGMENTS IN SHADES OF BROWN/GRAY/OTHER COLORS
- (SANDY SILT) SANDY, SILT-SIZE MATERIAL IN SHADES OF BLACK/BROWN/GRAY, POSSIBLY DISINTEGRATED SEDIMETARY ROCK

NOTES:

- WATER TABLE AT THE TIME OF DRILLING
- N — NUMBERS TO THE LEFT OF BORINGS INDICATE SPT VALUE FOR 1 FOOT (12") PENETRATION (UNLESS OTHERWISE NOTED)
- d — DIAMETER
- t — TIME
- NA — NOT AVAILABLE
- CR — CORE RECOVERY
- RQD — ROCK QUALITY DESIGNATION
- d — UNIT WEIGHT lb/cft
- q_u — UNCONFINED COMPRESSION AT SAMPLE DEPTH (tsf)
- q_{st} — SPLIT TENSILE STRENGTH AT SAMPLE DEPTH (tsf)
- ⇦ — LOSS OF CIRCULATION
- WOH — WEIGHT OT THE HAMMER
- CASING USED

NOTES:

1. THE LIMESTONE MAY BE HARD TO EXCAVATE AND DEWATER; SPECIAL EQUIPMENT AND TOOLS MAY BE REQUIRED.
2. BORING LOCATIONS (STATIONS AND OFFSETS) BASED ON 70% PRELIMINARY ENGINEERING ALIGNMENT. SEE BORING LOCATION PLANS FOR SPECIFIC COORDINATE DATA.

VERTICAL SCALE: 1"=16'

ENVIRONMENTAL CLASSIFICATION

SEE THE GEOTECHNICAL REPORT

RELATION OF RQD AND IN-SITU ROCK QUALITY	
RQD (%)	ROCK QUALITY
90-100	EXCELLENT
75-90	GOOD
50-75	FAIR
25-50	POOR
0-25	VERY POOR

GRANULAR MATERIALS

RELATIVE DENSITY	SAFETY HAMMER SPT N-VALUE (BLOW/FOOT)	AUTOMATIC HAMMER SPT N-VALUE (BLOW/FOOT)
VERY LOOSE	LESS THAN 4	LESS THAN 3
LOOSE	4 - 10	3 - 7
MEDIUM DENSE	10 - 30	7 - 21
DENSE	30 - 50	21 - 35
VERY DENSE	GREATER THAN 50	GREATER THAN 35

SK Designed by	05-06 Date				
SK/EP Drawn by	05-06 Date				
AK Checked by	05-06 Date				
Approved by	Date	No.	Date	By / Chk	App. Revisions

NORTH CORRIDOR METRORAIL EXTENSION - PRELIMINARY ENGINEERING (100% SUBMITTAL)

MIAMI-DADE COUNTY — MIAMI-DADE TRANSIT

PARSONS
7600 CORPORATE CENTER DRIVE, SUITE 500
MIAMI, FLORIDA 33126
PHONE: (786) 464-1000 FAX: (786) 845-7119
CERTIFICATE OF AUTHORIZATION NO. 1838
Approved Date

HP CONSULTANTS INC.
License No. 9509
ARVIND KUMBHOJKAR, PH.D, P.E.
License No. 41067
10220 SW 107 Street
Miami, Fl 33176 Ph:(305)596-1585
Approved Date

GEOTECHNICAL

REPORT OF CORE BORINGS

Scale 1" = 16' | Drawing GE-044 | Sheet 436

5/4/2006 1:42:39 AM c:\HP\BORING_PROFILE\Rgeonc08.dgn

BORING No.: B-93
LOCATION: 351+47.590 (25.543' RT)
ELEVATION: 8.55
HAMMER: SAFETY
TYPE OF RIG: B-53
DATE: 08/24/05

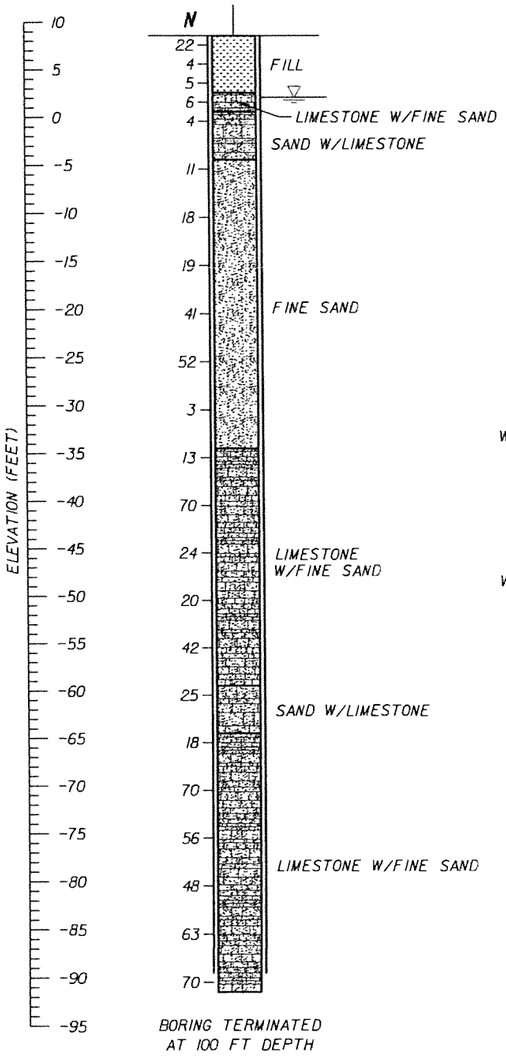

BORING No.: B-94
LOCATION: 354+55.286 (4.564' RT)
ELEVATION: 9.69
HAMMER: AUTOMATIC
TYPE OF RIG: CME 55
DATE: 07/29/05

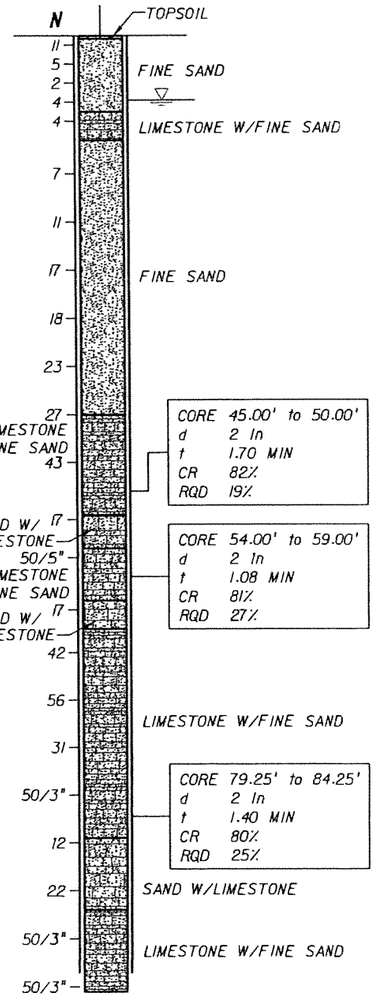

BORING No.: B-95
LOCATION: 358+77.280 (122.125' LT)
ELEVATION: 7.91
HAMMER: SAFETY
TYPE OF RIG: B-53
DATE: 08/24/05

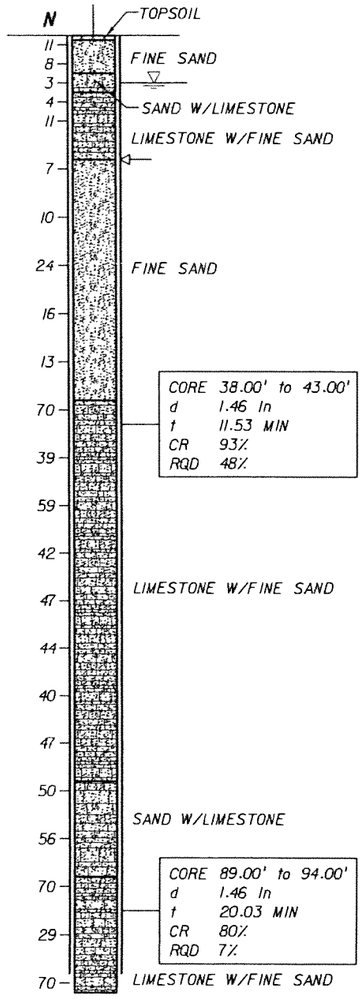

BORING No.: B-96
LOCATION: 354+43.778 (77.786' RT)
ELEVATION: 8.16
HAMMER: SAFETY
TYPE OF RIG: B-53
DATE: 08/25/05

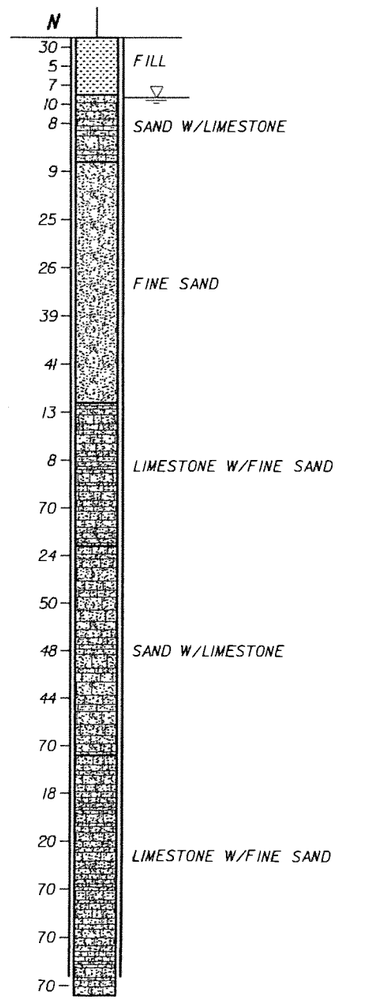

LEGEND:

- ASPHALT PAVEMENT
- (TOPSOIL) BLACK/DARK BROWN/DARK GRAY TO GRAY, SILTY SAND WITH ROOTS, ORGANICS, AND OTHER MATERIALS
- (FILL) LIMEROCK FRAGMENTS, COARSE GRAVEL TO SILT SIZE, IN SHADES OF BROWN OR GRAY, OCCASIONALLY MIXED WITH TOP SOIL
- (FINE SAND) VERY LOOSE TO VERY DENSE, FINE-SAND-SIZE MATERIAL IN SHADES OF BROWN, GRAY, OR OTHERS COLORS, OCCASIONALLY ORGANIC STAINED
- (SILTY SAND) SILTY SAND-SIZE MATERIAL IN SHADES OF BROWN/GRAY/OTHER COLORS POSSIBLY DISINTEGRATED SEDIMETARY ROCK
- (LIMESTONE WITH FINE SAND) VUGGY, SEDIMENTARY ROCK MADE OF $CaCO_3$, WITH SAND-SIZE MATERIAL, IN SHADES OF BROWN/GRAY/OTHER COLORS, OCCASIONALLY WITH SANDSTONE AND SHELL FRAGMENTS
- (SAND WITH LIMESTONE) SAND-SIZE MATERIAL WITH LIMESTONE FRAGMENTS IN SHADES OF BROWN, GRAY, OR OTHER COLORS, SOMETIMES WITH SANDSTONE FRAGMENTS
- (ORGANICS) DARK GRAY TO BLACK, SILT TO FINE-SAND-SIZE MATERIAL HAVING ORGANIC CONTENT> 5%
- (SANDSTONE WITH SAND) SEDIMENTARY ROCK MADE OF SAND-SIZE MATERIAL IN $CaCO_3$ MATRIX, IN SHADES OF BROWN OR GRAY, WITH FINE-SAND-SIZE MATERIAL
- (SAND WITH SANDSTONE) SAND-SIZE MATERIAL WITH SANDSTONE FRAGMENTS IN SHADES OF BROWN/GRAY/ OTHER COLORS
- (SANDY SILT) SANDY, SILT-SIZE MATERIAL IN SHADES OF BLACK/BROWN/GRAY, POSSIBLY DISINTEGRATED SEDIMETARY ROCK

NOTES:

- WATER TABLE AT THE TIME OF DRILLING
- N — NUMBERS TO THE LEFT OF BORINGS INDICATE SPT VALUE FOR 1 FOOT (12") PENETRATION (UNLESS OTHERWISE NOTED)
- d — DIAMETER
- t — TIME
- NA — NOT AVAILABLE
- CR — CORE RECOVERY
- RQD — ROCK QUALITY DESIGNATION
- γ — UNIT WEIGHT lb/cft
- q_u — UNCONFINED COMPRESSION AT SAMPLE DEPTH (tsf)
- q_{st} — SPLIT TENSILE STRENGTH AT SAMPLE DEPTH (tsf)
- ⇐ — LOSS OF CIRCULATION
- WOH — WEIGHT OT THE HAMMER
- CASING USED

NOTES:

1. THE LIMESTONE MAY BE HARD TO EXCAVATE AND DEWATER; SPECIAL EQUIPMENT AND TOOLS MAY BE REQUIRED.
2. BORING LOCATIONS (STATIONS AND OFFSETS) BASED ON 70% PRELIMINARY ENGINEERING ALIGNMENT. SEE BORING LOCATION PLANS FOR SPECIFIC COORDINATE DATA.

VERTICAL SCALE: 1"=16'

ENVIRONMENTAL CLASSIFICATION

SEE THE GEOTECHNICAL REPORT

RELATION OF RQD AND IN-SITU ROCK QUALITY

RQD (%)	ROCK QUALITY
90-100	EXCELLENT
75-90	GOOD
50-75	FAIR
25-50	POOR
0-25	VERY POOR

GRANULAR MATERIALS

RELATIVE DENSITY	SAFETY HAMMER SPT N-VALUE (BLOW/FOOT)	AUTOMATIC HAMMER SPT N-VALUE (BLOW/FOOT)
VERY LOOSE	LESS THAN 4	LESS THAN 3
LOOSE	4 - 10	3 - 7
MEDIUM DENSE	10 - 30	7 - 21
DENSE	30 - 50	21 - 35
VERY DENSE	GREATER THAN 50	GREATER THAN 35

SK Designed by	05-06 Date				
SK/EP Drawn by	05-06 Date				
AK Checked by	05-06 Date				
Approved by	Date	No.	Date	By / Chk	App. Revisions

NORTH CORRIDOR METRORAIL EXTENSION - PRELIMINARY ENGINEERING (100% SUBMITTAL)

MIAMI-DADE COUNTY — MIAMI-DADE TRANSIT

PARSONS
7600 CORPORATE CENTER DRIVE, SUITE 500
MIAMI, FLORIDA 33126
PHONE: (786) 464-1000 FAX: (786) 845-7119
CERTIFICATE OF AUTHORIZATION NO. 1838
Approved Date

HP CONSULTANTS INC.
License No. 9509
ARVIND KUMBHOJKAR, PH.D, P.E.
License No. 41067
10220 SW 107 Street
Miami, Fl 33176 Ph:(305)596-1585
Approved Date

GEOTECHNICAL

REPORT OF CORE BORINGS

Scale 1" = 16' | Drawing GE-045 | Sheet

5/4/2006 8:27:44 AM c:\HP\BORING_PROFILE\Rgeonc06.dgn

BORING No.: B-97
LOCATION: 365+13.328 (25.525' LT)
ELEVATION: 7.71
HAMMER: SAFETY
TYPE OF RIG: B-53
DATE: 08/27/05

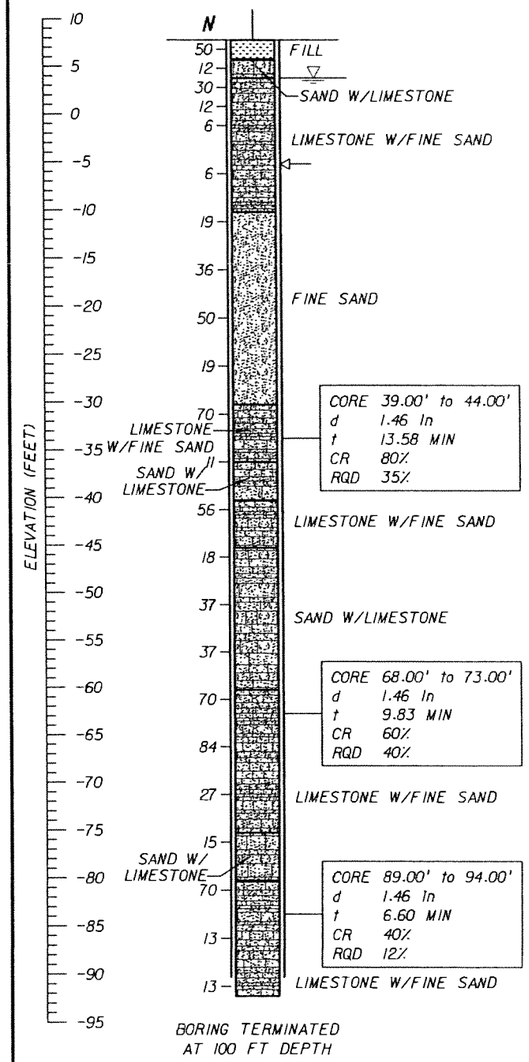

BORING TERMINATED AT 100 FT DEPTH

BORING No.: B-98
LOCATION: 367+60.095 (26.329' LT)
ELEVATION: 9.11
HAMMER: SAFETY
TYPE OF RIG: B-53
DATE: 08/30/05

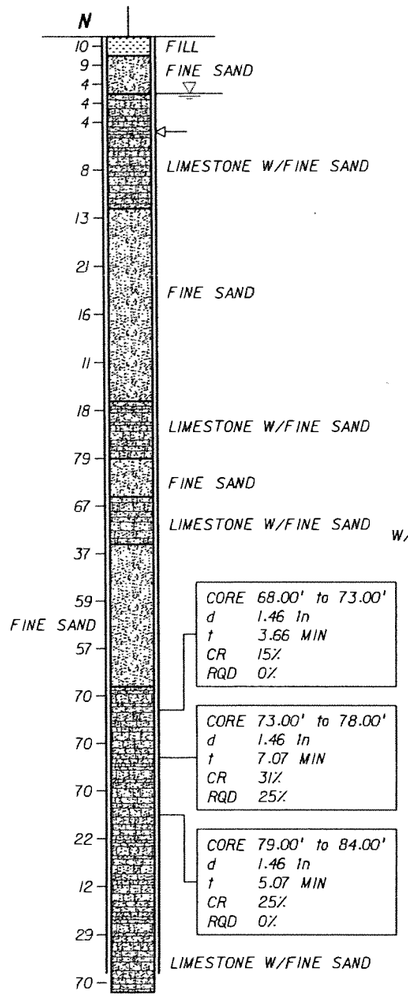

BORING TERMINATED AT 100 FT DEPTH

BORING No.: B-99
LOCATION: 369+32.486 (24.907' LT)
ELEVATION: 9.47
HAMMER: SAFETY
TYPE OF RIG: B-53
DATE: 08/29/05

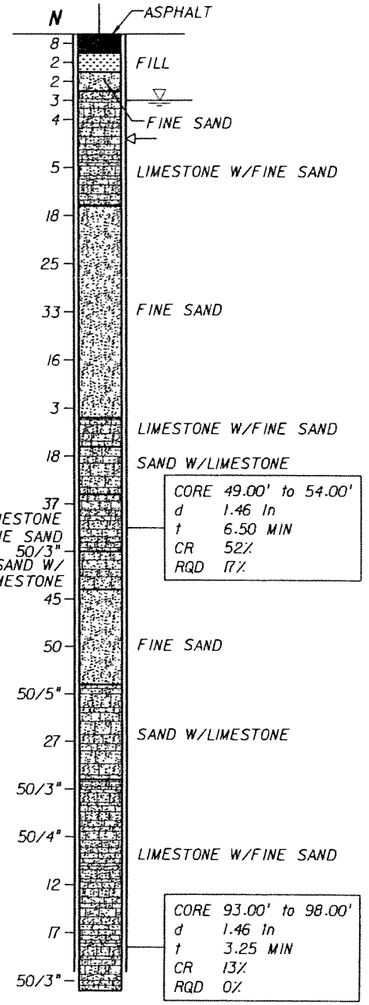

BORING TERMINATED AT 100 FT DEPTH

BORING No.: B-100
LOCATION: 373+56.403 (106.156' RT)
ELEVATION: 8.52
HAMMER: SAFETY
TYPE OF RIG: B-53
DATE: 08/31/05

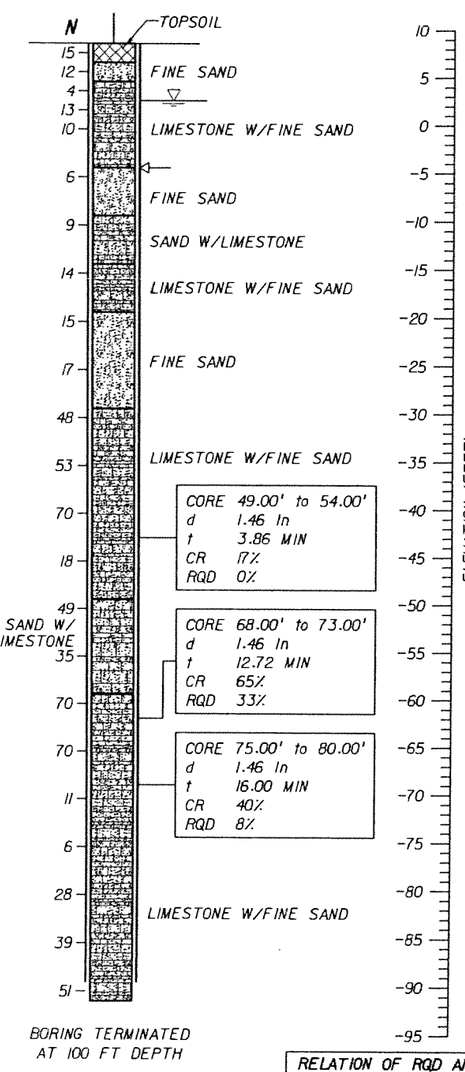

BORING TERMINATED AT 100 FT DEPTH

LEGEND:

- ASPHALT PAVEMENT
- (TOPSOIL) BLACK/DARK BROWN/DARK GRAY TO GRAY, SILTY SAND WITH ROOTS, ORGANICS, AND OTHER MATERIALS
- (FILL) LIMEROCK FRAGMENTS, COARSE GRAVEL TO SILT SIZE, IN SHADES OF BROWN OR GRAY, OCCASIONALLY MIXED WITH TOP SOIL
- (FINE SAND) VERY LOOSE TO VERY DENSE, FINE-SAND-SIZE MATERIAL IN SHADES OF BROWN, GRAY, OR OTHERS COLORS, OCCASIONALLY ORGANIC STAINED
- (SILTY SAND) SILTY SAND-SIZE MATERIAL IN SHADES OF BROWN/GRAY/OTHER COLORS POSSIBLY DISINTEGRATED SEDIMETARY ROCK
- (LIMESTONE WITH FINE SAND) VUGGY, SEDIMENTARY ROCK MADE OF $CaCO_3$, WITH SAND-SIZE MATERIAL, IN SHADES OF BROWN/GRAY/OTHER COLORS, OCCASIONALLY WITH SANDSTONE AND SHELL FRAGMENTS
- (SAND WITH LIMESTONE) SAND-SIZE MATERIAL WITH LIMESTONE FRAGMENTS IN SHADES OF BROWN, GRAY, OR OTHER COLORS, SOMETIMES WITH SANDSTONE FRAGMENTS
- (ORGANICS) DARK GRAY TO BLACK, SILT TO FINE-SAND-SIZE MATERIAL HAVING ORGANIC CONTENT > 5%
- (SANDSTONE WITH SAND) SEDIMENTARY ROCK MADE OF SAND-SIZE MATERIAL IN $CaCO_3$ MATRIX, IN SHADES OF BROWN OR GRAY, WITH FINE-SAND-SIZE MATERIAL
- (SAND WITH SANDSTONE) SAND-SIZE MATERIAL WITH SANDSTONE FRAGMENTS IN SHADES OF BROWN/GRAY/OTHER COLORS
- (SANDY SILT) SANDY, SILT-SIZE MATERIAL IN SHADES OF BLACK/BROWN/GRAY, POSSIBLY DISINTEGRATED SEDIMETARY ROCK

NOTES:

- WATER TABLE AT THE TIME OF DRILLING
- N — NUMBERS TO THE LEFT OF BORINGS INDICATE SPT VALUE FOR 1 FOOT (12") PENETRATION (UNLESS OTHERWISE NOTED)
- d — DIAMETER
- t — TIME
- NA — NOT AVAILABLE
- CR — CORE RECOVERY
- RQD — ROCK QUALITY DESIGNATION
- δ — UNIT WEIGHT lb/cft
- q_u — UNCONFINED COMPRESSION AT SAMPLE DEPTH (tsf)
- q_{st} — SPLIT TENSILE STRENGTH AT SAMPLE DEPTH (tsf)
- ⟵ — LOSS OF CIRCULATION
- WOH — WEIGHT OT THE HAMMER
- CASING USED

GRANULAR MATERIALS

RELATIVE DENSITY	SAFETY HAMMER SPT N-VALUE (BLOW/FOOT)	AUTOMATIC HAMMER SPT N-VALUE (BLOW/FOOT)
VERY LOOSE	LESS THAN 4	LESS THAN 3
LOOSE	4 - 10	3 - 7
MEDIUM DENSE	10 - 30	7 - 21
DENSE	30 - 50	21 - 35
VERY DENSE	GREATER THAN 50	GREATER THAN 35

RELATION OF RQD AND IN-SITU ROCK QUALITY

RQD (%)	ROCK QUALITY
90-100	EXCELLENT
75-90	GOOD
50-75	FAIR
25-50	POOR
0-25	VERY POOR

NOTES:

1. THE LIMESTONE MAY BE HARD TO EXCAVATE AND DEWATER; SPECIAL EQUIPMENT AND TOOLS MAY BE REQUIRED.
2. BORING LOCATIONS (STATIONS AND OFFSETS) BASED ON 70% PRELIMINARY ENGINEERING ALIGNMENT. SEE BORING LOCATION PLANS FOR SPECIFIC COORDINATE DATA.

VERTICAL SCALE: 1"=16'

ENVIRONMENTAL CLASSIFICATION
SEE THE GEOTECHNICAL REPORT

SK Designed by	05-06 Date					
SK/EP Drawn by	05-06 Date					
AK Checked by	05-06 Date					
Approved by	Date	No.	Date	By / Chk	App.	Revisions

NORTH CORRIDOR METRORAIL EXTENSION - PRELIMINARY ENGINEERING (100% SUBMITTAL)

MIAMI-DADE COUNTY — MIAMI-DADE TRANSIT

PARSONS
7600 CORPORATE CENTER DRIVE, SUITE 500
MIAMI, FLORIDA 33126
PHONE: (786) 464-1000 FAX: (786) 845-7119
CERTIFICATE OF AUTHORIZATION NO. 1836
Approved | Date

HP CONSULTANTS INC.
License No. 9509
ARVIND KUMBHOJKAR, PH.D, P.E.
License No. 41067
10220 SW 107 Street
Miami, Fl 33176 Ph:(305)596-1585
Approved | Date

GEOTECHNICAL

REPORT OF CORE BORINGS

Scale 1" = 16' | Drawing GE-046 | Sheet 438

5/4/2006 1:43:27 AM c:\HP\BORING_PROFILE\Rgeonc09.dgn

BORING No.:	B-101
LOCATION:	376+74.395 (113.882' RT)
ELEVATION:	7.32
HAMMER:	SAFETY
TYPE OF RIG:	B-53
DATE:	09/02/05

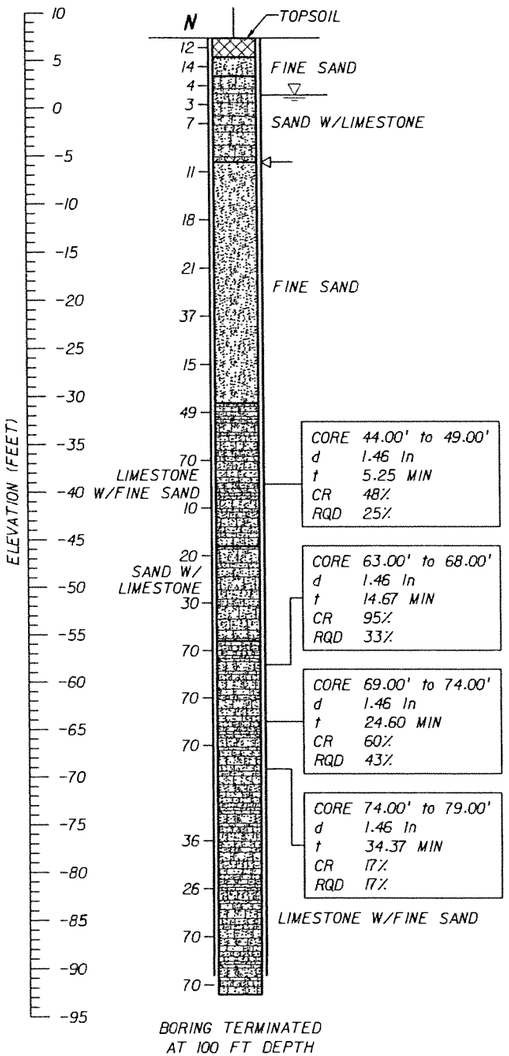

BORING TERMINATED AT 100 FT DEPTH

BORING No.:	B-102
LOCATION:	379+12.373 (115.468' RT)
ELEVATION:	6.98
HAMMER:	SAFETY
TYPE OF RIG:	B-53
DATE:	09/03/05

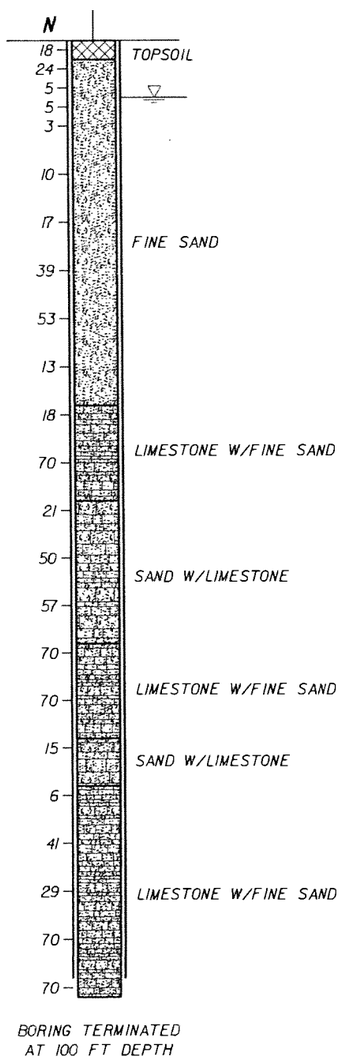

BORING TERMINATED AT 100 FT DEPTH

BORING No.:	B-103
LOCATION:	380+95.810 (15.182' LT)
ELEVATION:	7.78
HAMMER:	SAFETY
TYPE OF RIG:	B-53
DATE:	07/01/05

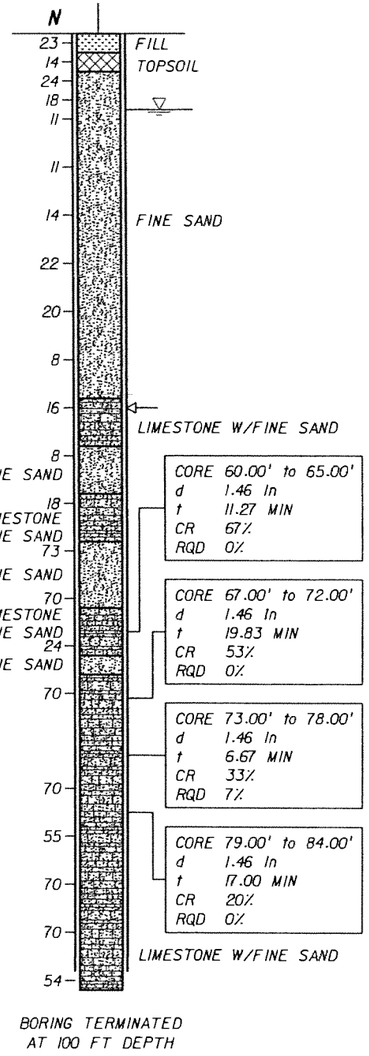

BORING TERMINATED AT 100 FT DEPTH

BORING No.:	B-104
LOCATION:	384+10.245 (16.003' LT)
ELEVATION:	7.21
HAMMER:	SAFETY
TYPE OF RIG:	B-53
DATE:	09/06/05

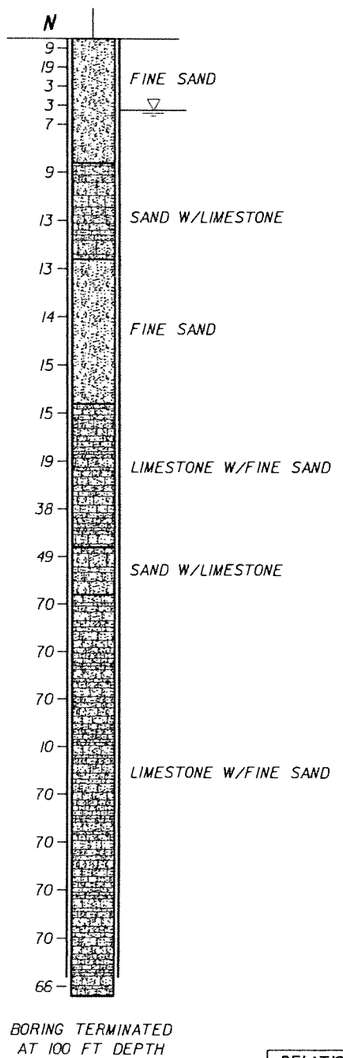

BORING TERMINATED AT 100 FT DEPTH

VERTICAL SCALE: 1"=16'

LEGEND:

- ASPHALT PAVEMENT
- (TOPSOIL) BLACK/DARK BROWN/DARK GRAY TO GRAY, SILTY SAND WITH ROOTS, ORGANICS, AND OTHER MATERIALS
- (FILL) LIMEROCK FRAGMENTS, COARSE GRAVEL TO SILT SIZE, IN SHADES OF BROWN OR GRAY, OCCASIONALLY MIXED WITH TOP SOIL
- (FINE SAND) VERY LOOSE TO VERY DENSE, FINE-SAND-SIZE MATERIAL IN SHADES OF BROWN, GRAY, OR OTHERS COLORS, OCCASIONALLY ORGANIC STAINED
- (SILTY SAND) SILTY SAND-SIZE MATERIAL IN SHADES OF BROWN/GRAY/OTHER COLORS POSSIBLY DISINTEGRATED SEDIMETARY ROCK
- (LIMESTONE WITH FINE SAND) VUGGY, SEDIMENTARY ROCK MADE OF $CaCO_3$, WITH SAND-SIZE MATERIAL, IN SHADES OF BROWN/GRAY/OTHER COLORS, OCCASIONALLY WITH SANDSTONE AND SHELL FRAGMENTS
- (SAND WITH LIMESTONE) SAND-SIZE MATERIAL WITH LIMESTONE FRAGMENTS IN SHADES OF BROWN, GRAY, OR OTHER COLORS, SOMETIMES WITH SANDSTONE FRAGMENTS
- (ORGANICS) DARK GRAY TO BLACK, SILT TO FINE-SAND-SIZE MATERIAL HAVING ORGANIC CONTENT > 5%
- (SANDSTONE WITH SAND) SEDIMENTARY ROCK MADE OF SAND-SIZE MATERIAL IN $CaCO_3$ MATRIX, IN SHADES OF BROWN OR GRAY, WITH FINE-SAND-SIZE MATERIAL
- (SAND WITH SANDSTONE) SAND-SIZE MATERIAL WITH SANDSTONE FRAGMENTS IN SHADES OF BROWN/GRAY/OTHER COLORS
- (SANDY SILT) SANDY, SILT-SIZE MATERIAL IN SHADES OF BLACK/BROWN/GRAY, POSSIBLY DISINTEGRATED SEDIMETARY ROCK

NOTES:

- WATER TABLE AT THE TIME OF DRILLING
- N — NUMBERS TO THE LEFT OF BORINGS INDICATE SPT VALUE FOR 1 FOOT (12") PENETRATION (UNLESS OTHERWISE NOTED)
- d — DIAMETER
- t — TIME
- NA — NOT AVAILABLE
- CR — CORE RECOVERY
- RQD — ROCK QUALITY DESIGNATION
- γ — UNIT WEIGHT lb/cft
- q_u — UNCONFINED COMPRESSION AT SAMPLE DEPTH (tsf)
- q_{st} — SPLIT TENSILE STRENGTH AT SAMPLE DEPTH (tsf)
- ⟵ — LOSS OF CIRCULATION
- WOH — WEIGHT OT THE HAMMER
- CASING USED

NOTES:

1. THE LIMESTONE MAY BE HARD TO EXCAVATE AND DEWATER; SPECIAL EQUIPMENT AND TOOLS MAY BE REQUIRED.
2. BORING LOCATIONS (STATIONS AND OFFSETS) BASED ON 70% PRELIMINARY ENGINEERING ALIGNMENT. SEE BORING LOCATION PLANS FOR SPECIFIC COORDINATE DATA.

ENVIRONMENTAL CLASSIFICATION

SEE THE GEOTECHNICAL REPORT

RELATION OF RQD AND IN-SITU ROCK QUALITY

RQD (%)	ROCK QUALITY
90-100	EXCELLENT
75-90	GOOD
50-75	FAIR
25-50	POOR
0-25	VERY POOR

GRANULAR MATERIALS

RELATIVE DENSITY	SAFETY HAMMER SPT N-VALUE (BLOW/FOOT)	AUTOMATIC HAMMER SPT N-VALUE (BLOW/FOOT)
VERY LOOSE	LESS THAN 4	LESS THAN 3
LOOSE	4 - 10	3 - 7
MEDIUM DENSE	10 - 30	7 - 21
DENSE	30 - 50	21 - 35
VERY DENSE	GREATER THAN 50	GREATER THAN 35

SK	05-06				
Designed by	Date				
SK/EP	05-06				
Drawn by	Date				
AK	05-06				
Checked by	Date				
Approved by	Date	No.	Date	By / Chk	App. Revisions

NORTH CORRIDOR METRORAIL EXTENSION - PRELIMINARY ENGINEERING (100% SUBMITTAL)

MIAMI-DADE COUNTY — MIAMI-DADE TRANSIT

PARSONS
7600 CORPORATE CENTER DRIVE, SUITE 500
MIAMI, FLORIDA 33126
PHONE: (786) 464-1000 FAX: (786) 845-7119
CERTIFICATE OF AUTHORIZATION NO. 1838

HP CONSULTANTS INC.
License No. 9509
ARVIND KUMBHOJKAR, PH.D, P.E.
License No. 41067
10220 SW 107 Street
Miami, Fl 33176 Ph:(305)596-1585

Approved | Date

GEOTECHNICAL

REPORT OF CORE BORINGS

Scale 1" = 16' | Drawing GE-047 | Sheet 4 of 5

5/4/2006 1:43:51 AM c:\HP\BORING_PROFILE\Rgeonc09.dgn

BORING No.: B-105
LOCATION: 388+39.154 (1.764' LT)
ELEVATION: 8.09
HAMMER: SAFETY
TYPE OF RIG: B-53
DATE: 07/28/05

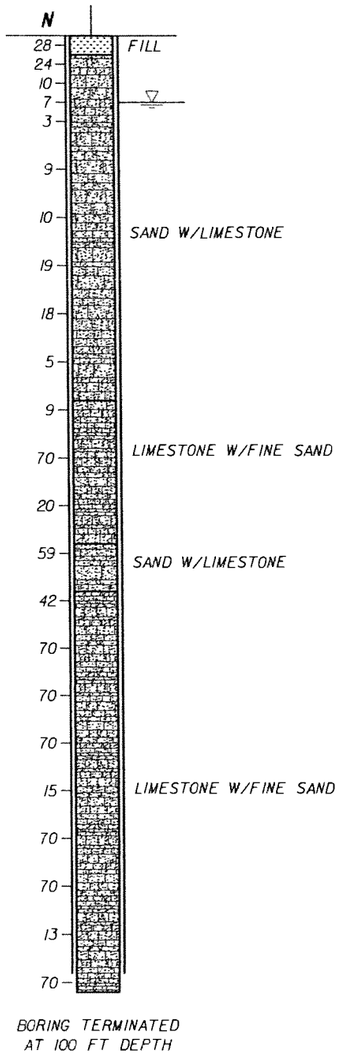

BORING TERMINATED AT 100 FT DEPTH

BORING No.: B-106
LOCATION: 389+59.292 (0.608' RT)
ELEVATION: 7.73
HAMMER: SAFETY
TYPE OF RIG: B-53
DATE: 07/18/05

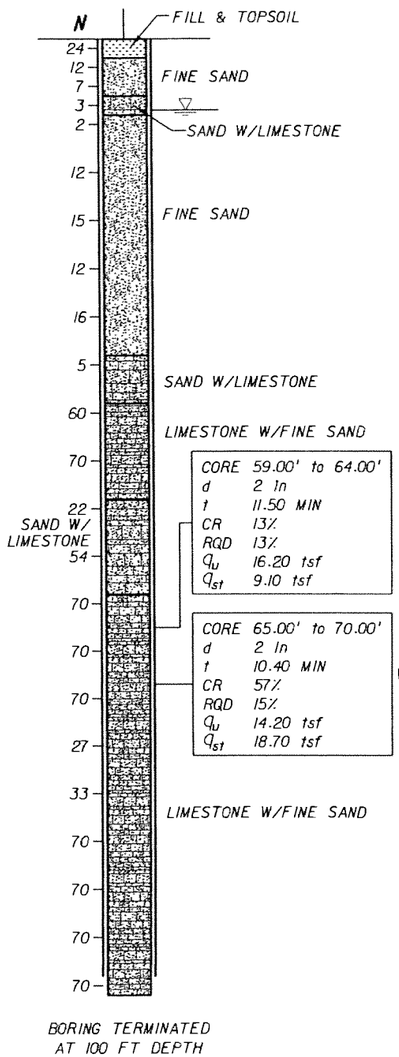

CORE 59.00' to 64.00'
d 2 In
t 11.50 MIN
CR 13%
RQD 13%
q_u 16.20 tsf
q_{st} 9.10 tsf

CORE 65.00' to 70.00'
d 2 In
t 10.40 MIN
CR 57%
RQD 15%
q_u 14.20 tsf
q_{st} 18.70 tsf

BORING TERMINATED AT 100 FT DEPTH

BORING No.: B-107
LOCATION: 392+01.156 (10.670' RT)
ELEVATION: 8.85
HAMMER: SAFETY
TYPE OF RIG: B-53
DATE: 07/19/05

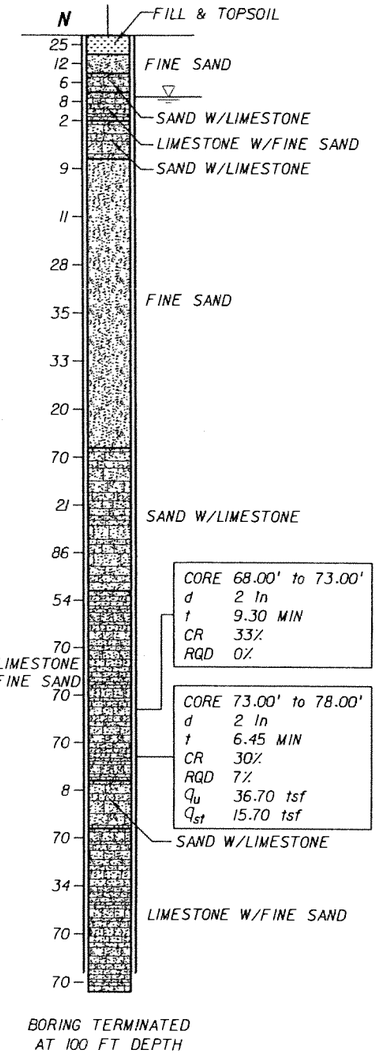

CORE 68.00' to 73.00'
d 2 In
t 9.30 MIN
CR 33%
RQD 0%

CORE 73.00' to 78.00'
d 2 In
t 6.45 MIN
CR 30%
RQD 7%
q_u 36.70 tsf
q_{st} 15.70 tsf

BORING TERMINATED AT 100 FT DEPTH

BORING No.: B-108
LOCATION: 394+01.635 (14.913' RT)
ELEVATION: 8.76
HAMMER: SAFETY
TYPE OF RIG: B-53
DATE: 07/20/05

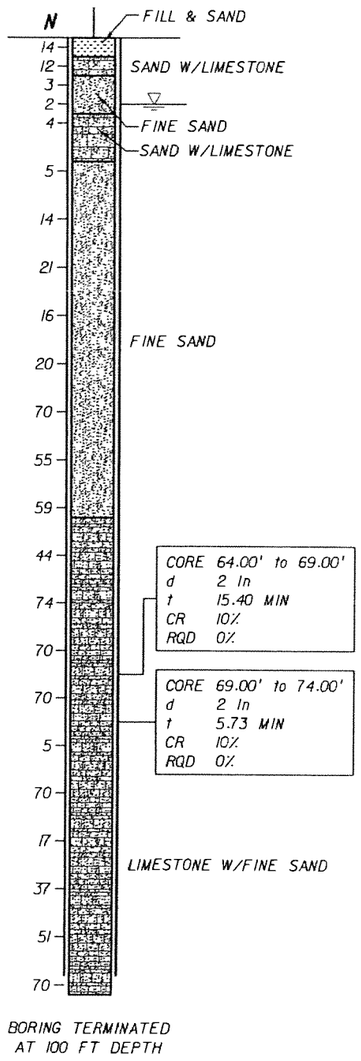

CORE 64.00' to 69.00'
d 2 In
t 15.40 MIN
CR 10%
RQD 0%

CORE 69.00' to 74.00'
d 2 In
t 5.73 MIN
CR 10%
RQD 0%

BORING TERMINATED AT 100 FT DEPTH

ELEVATION (FEET)
10 5 0 -5 -10 -15 -20 -25 -30 -35 -40 -45 -50 -55 -60 -65 -70 -75 -80 -85 -90 -95

LEGEND:

- ASPHALT PAVEMENT
- (TOPSOIL) BLACK/DARK BROWN/DARK GRAY TO GRAY, SILTY SAND WITH ROOTS, ORGANICS, AND OTHER MATERIALS
- (FILL) LIMEROCK FRAGMENTS, COARSE GRAVEL TO SILT SIZE, IN SHADES OF BROWN OR GRAY, OCCASIONALLY MIXED WITH TOP SOIL
- (FINE SAND) VERY LOOSE TO VERY DENSE, FINE-SAND-SIZE MATERIAL IN SHADES OF BROWN, GRAY, OR OTHERS COLORS, OCCASIONALLY ORGANIC STAINED
- (SILTY SAND) SILTY SAND-SIZE MATERIAL IN SHADES OF BROWN/GRAY/OTHER COLORS POSSIBLY DISINTEGRATED SEDIMETARY ROCK
- (LIMESTONE WITH FINE SAND) VUGGY, SEDIMENTARY ROCK MADE OF $CaCO_3$, WITH SAND-SIZE MATERIAL, IN SHADES OF BROWN/GRAY/OTHER COLORS, OCCASIONALLY WITH SANDSTONE AND SHELL FRAGMENTS
- (SAND WITH LIMESTONE) SAND-SIZE MATERIAL WITH LIMESTONE FRAGMENTS IN SHADES OF BROWN, GRAY, OR OTHER COLORS, SOMETIMES WITH SANDSTONE FRAGMENTS
- (ORGANICS) DARK GRAY TO BLACK, SILT TO FINE-SAND-SIZE MATERIAL HAVING ORGANIC CONTENT > 5%
- (SANDSTONE WITH SAND) SEDIMENTARY ROCK MADE OF SAND-SIZE MATERIAL IN $CaCO_3$ MATRIX, IN SHADES OF BROWN OR GRAY, WITH FINE-SAND-SIZE MATERIAL
- (SAND WITH SANDSTONE) SAND-SIZE MATERIAL WITH SANDSTONE FRAGMENTS IN SHADES OF BROWN/GRAY/OTHER COLORS
- (SANDY SILT) SANDY, SILT-SIZE MATERIAL IN SHADES OF BLACK/BROWN/GRAY, POSSIBLY DISINTEGRATED SEDIMETARY ROCK

NOTES:

- ▽ WATER TABLE AT THE TIME OF DRILLING
- N NUMBERS TO THE LEFT OF BORINGS INDICATE SPT VALUE FOR 1 FOOT (12") PENETRATION (UNLESS OTHERWISE NOTED)
- d DIAMETER
- t TIME
- NA NOT AVAILABLE
- CR CORE RECOVERY
- RQD ROCK QUALITY DESIGNATION
- δ UNIT WEIGHT lb/cft
- q_u UNCONFINED COMPRESSION AT SAMPLE DEPTH (tsf)
- q_{st} SPLIT TENSILE STRENGTH AT SAMPLE DEPTH (tsf)
- ◁— LOSS OF CIRCULATION
- WOH WEIGHT OT THE HAMMER
- CASING USED

NOTES:

1. THE LIMESTONE MAY BE HARD TO EXCAVATE AND DEWATER; SPECIAL EQUIPMENT AND TOOLS MAY BE REQUIRED.
2. BORING LOCATIONS (STATIONS AND OFFSETS) BASED ON 70% PRELIMINARY ENGINEERING ALIGNMENT. SEE BORING LOCATION PLANS FOR SPECIFIC COORDINATE DATA.

VERTICAL SCALE: 1"=16'

ENVIRONMENTAL CLASSIFICATION
SEE THE GEOTECHNICAL REPORT

GRANULAR MATERIALS

RELATION OF RQD AND IN-SITU ROCK QUALITY	
RQD (%)	ROCK QUALITY
90-100	EXCELLENT
75-90	GOOD
50-75	FAIR
25-50	POOR
0-25	VERY POOR

RELATIVE DENSITY	SAFETY HAMMER SPT N-VALUE (BLOW/FOOT)	AUTOMATIC HAMMER SPT N-VALUE (BLOW/FOOT)
VERY LOOSE	LESS THAN 4	LESS THAN 3
LOOSE	4 - 10	3 - 7
MEDIUM DENSE	10 - 30	7 - 21
DENSE	30 - 50	21 - 35
VERY DENSE	GREATER THAN 50	GREATER THAN 35

SK	05-06					
Designed by	Date					
SK/EP	05-06					
Drawn by	Date					
AK	05-06					
Checked by	Date					
Approved by	Date	No.	Date	By / Chk	App.	Revisions

NORTH CORRIDOR METRORAIL EXTENSION - PRELIMINARY ENGINEERING (100% SUBMITTAL)

MIAMI-DADE COUNTY
MIAMI-DADE TRANSIT

PARSONS
7600 CORPORATE CENTER DRIVE, SUITE 500
MIAMI, FLORIDA 33126
PHONE: (786) 464-1000 FAX: (786) 845-7119
CERTIFICATE OF AUTHORIZATION NO. 1638
Approved Date

HP CONSULTANTS INC.
License No. 9509
ARVIND KUMBHOJKAR, PH.D, P.E.
License No. 41067
10220 SW 107 Street
Miami, Fl 33176 Ph:(305)596-1585
Approved Date

GEOTECHNICAL

REPORT OF CORE BORINGS

Scale 1" = 16' | Drawing GE-048 | Sheet 4 of 10

5/4/2006 1:44:14 AM c:\HP\BORING_PROFILE\Rgeonc09.dgn

BORING No.: B-109
LOCATION: 395+00.620 (22.572' RT)
ELEVATION: 9.31
HAMMER: SAFETY
TYPE OF RIG: B-53
DATE: 07/27/05

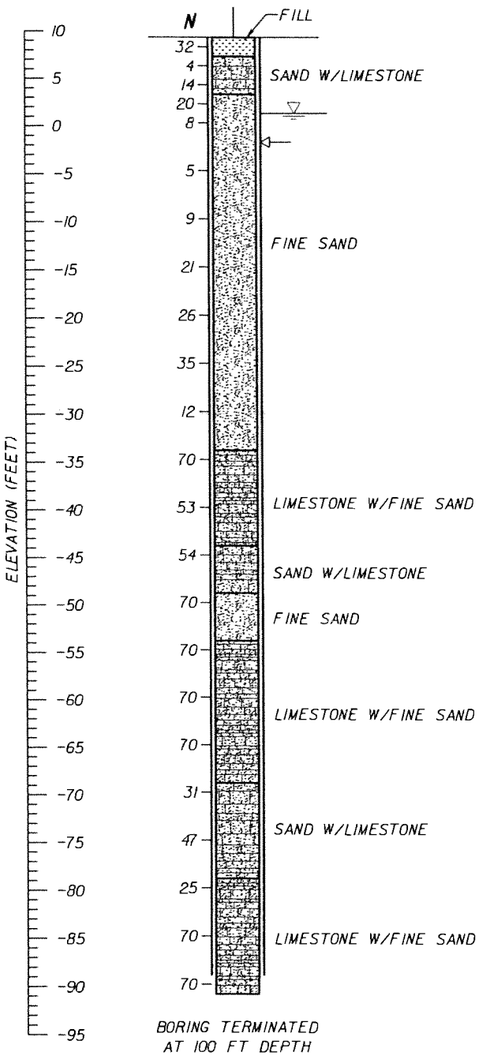

BORING TERMINATED AT 100 FT DEPTH

BORING No.: B-110
LOCATION: 395+57.964 (22.322' RT)
ELEVATION: 9.25
HAMMER: SAFETY
TYPE OF RIG: B-53
DATE: 09/06/05

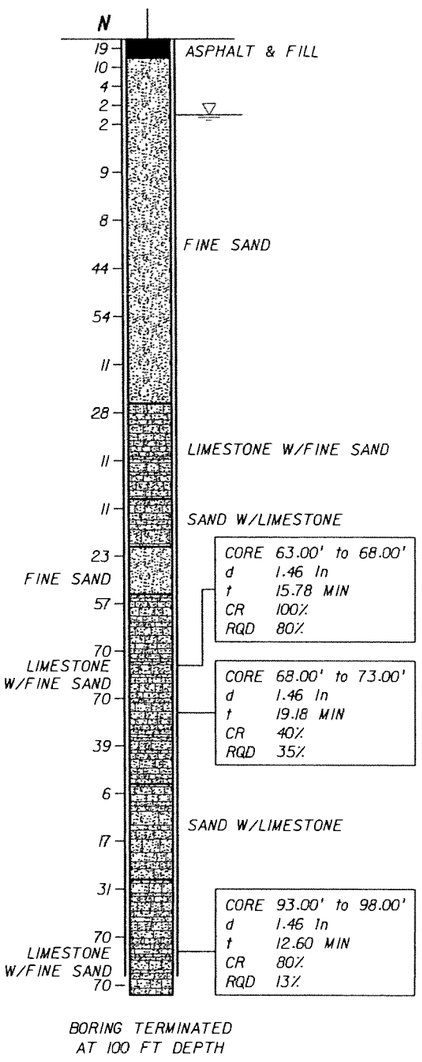

BORING TERMINATED AT 100 FT DEPTH

BORING No.: B-111
LOCATION: 398+07.647 (56.300' LT)
ELEVATION: 8.39
HAMMER: SAFETY
TYPE OF RIG: B-53
DATE: 05/08/05

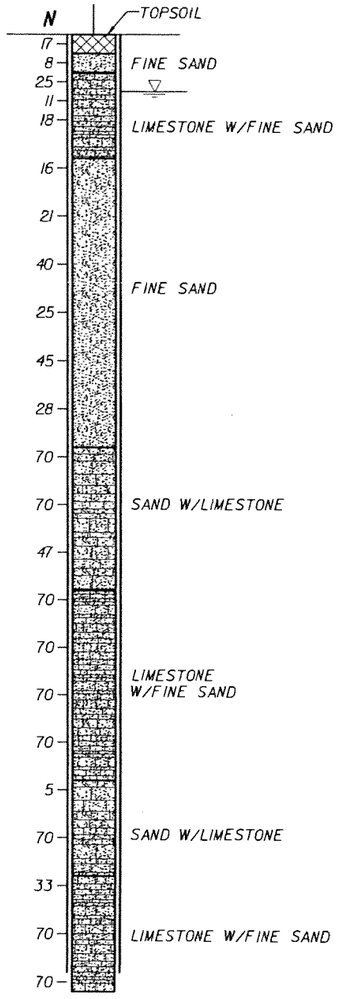

BORING TERMINATED AT 100 FT DEPTH

BORING No.: B-112
LOCATION: 398+07.043 (87.779' LT)
ELEVATION: 8.34
HAMMER: SAFETY
TYPE OF RIG: B-53
DATE: 07/02/05

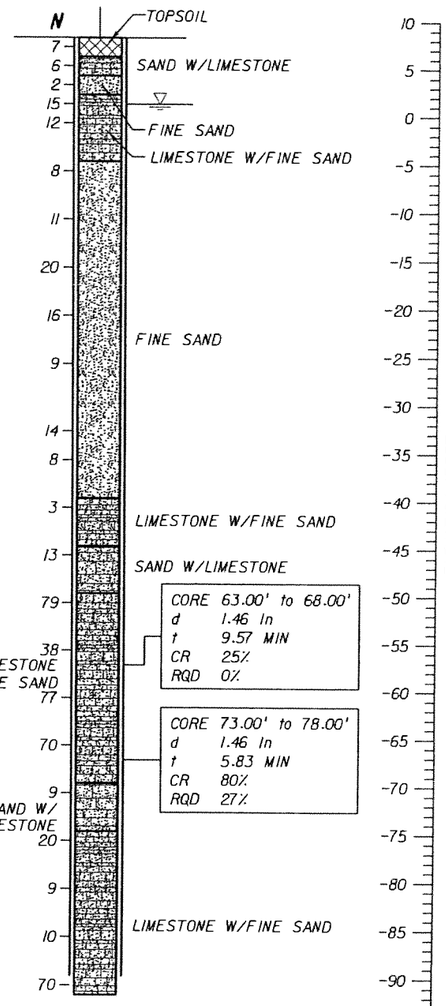

BORING TERMINATED AT 100 FT DEPTH

LEGEND:

- ASPHALT PAVEMENT
- (TOPSOIL) BLACK/DARK BROWN/DARK GRAY TO GRAY, SILTY SAND WITH ROOTS, ORGANICS, AND OTHER MATERIALS
- (FILL) LIMEROCK FRAGMENTS, COARSE GRAVEL TO SILT SIZE, IN SHADES OF BROWN OR GRAY, OCCASIONALLY MIXED WITH TOP SOIL
- (FINE SAND) VERY LOOSE TO VERY DENSE, FINE-SAND-SIZE MATERIAL IN SHADES OF BROWN, GRAY, OR OTHERS COLORS, OCCASIONALLY ORGANIC STAINED
- (SILTY SAND) SILTY SAND-SIZE MATERIAL IN SHADES OF BROWN/GRAY/OTHER COLORS POSSIBLY DISINTEGRATED SEDIMETARY ROCK
- (LIMESTONE WITH FINE SAND) VUGGY, SEDIMENTARY ROCK MADE OF $CaCO_3$, WITH SAND-SIZE MATERIAL, IN SHADES OF BROWN/GRAY/OTHER COLORS, OCCASIONALLY WITH SANDSTONE AND SHELL FRAGMENTS
- (SAND WITH LIMESTONE) SAND-SIZE MATERIAL WITH LIMESTONE FRAGMENTS IN SHADES OF BROWN, GRAY, OR OTHER COLORS, SOMETIMES WITH SANDSTONE FRAGMENTS
- (ORGANICS) DARK GRAY TO BLACK, SILT TO FINE-SAND-SIZE MATERIAL HAVING ORGANIC CONTENT> 5%
- (SANDSTONE WITH SAND) SEDIMENTARY ROCK MADE OF SAND-SIZE MATERIAL IN $CaCO_3$ MATRIX, IN SHADES OF BROWN OR GRAY, WITH FINE-SAND-SIZE MATERIAL
- (SAND WITH SANDSTONE) SAND-SIZE MATERIAL WITH SANDSTONE FRAGMENTS IN SHADES OF BROWN/GRAY/ OTHER COLORS
- (SANDY SILT) SANDY, SILT-SIZE MATERIAL IN SHADES OF BLACK/BROWN/GRAY, POSSIBLY DISINTEGRATED SEDIMETARY ROCK

NOTES:

- WATER TABLE AT THE TIME OF DRILLING
- N — NUMBERS TO THE LEFT OF BORINGS INDICATE SPT VALUE FOR 1 FOOT (12") PENETRATION (UNLESS OTHERWISE NOTED)
- d — DIAMETER
- t — TIME
- NA — NOT AVAILABLE
- CR — CORE RECOVERY
- RQD — ROCK QUALITY DESIGNATION
- γ — UNIT WEIGHT lb/cft
- q_u — UNCONFINED COMPRESSION AT SAMPLE DEPTH (tsf)
- q_{st} — SPLIT TENSILE STRENGTH AT SAMPLE DEPTH (tsf)
- ⟵ — LOSS OF CIRCULATION
- WOH — WEIGHT OT THE HAMMER
- CASING USED

GRANULAR MATERIALS

RELATIVE DENSITY	SAFETY HAMMER SPT N-VALUE (BLOW/FOOT)	AUTOMATIC HAMMER SPT N-VALUE (BLOW/FOOT)
VERY LOOSE	LESS THAN 4	LESS THAN 3
LOOSE	4 - 10	3 - 7
MEDIUM DENSE	10 - 30	7 - 21
DENSE	30 - 50	21 - 35
VERY DENSE	GREATER THAN 50	GREATER THAN 35

RELATION OF RQD AND IN-SITU ROCK QUALITY

RQD (%)	ROCK QUALITY
90-100	EXCELLENT
75-90	GOOD
50-75	FAIR
25-50	POOR
0-25	VERY POOR

NOTES:

1. THE LIMESTONE MAY BE HARD TO EXCAVATE AND DEWATER; SPECIAL EQUIPMENT AND TOOLS MAY BE REQUIRED.
2. BORING LOCATIONS (STATIONS AND OFFSETS) BASED ON 70% PRELIMINARY ENGINEERING ALIGNMENT. SEE BORING LOCATION PLANS FOR SPECIFIC COORDINATE DATA.

VERTICAL SCALE: 1"=16'

ENVIRONMENTAL CLASSIFICATION

SEE THE GEOTECHNICAL REPORT

SK	05-06				
Designed by	Date				
SK/EP	05-06				
Drawn by	Date				
AK	05-06				
Checked by	Date				
Approved by	Date	No.	Date	By / Chk	App.	Revisions

NORTH CORRIDOR METRORAIL EXTENSION - PRELIMINARY ENGINEERING (100% SUBMITTAL)

MIAMI-DADE COUNTY — MIAMI-DADE TRANSIT

PARSONS
7600 CORPORATE CENTER DRIVE, SUITE 500
MIAMI, FLORIDA 33126
PHONE: (786) 464-1000 FAX: (786) 845-7119
CERTIFICATE OF AUTHORIZATION NO. 1638
Approved | Date

HP CONSULTANTS INC.
License No. 9509
ARVIND KUMBHOJKAR, PH.D, P.E.
License No. 41067
10220 SW 107 Street
Miami, Fl 33176 Ph:(305)596-1585
Approved | Date

GEOTECHNICAL

REPORT OF CORE BORINGS

Scale 1" = 16' | Drawing GE-049 | Sheet 11 of 11

5/4/2006 1:44:51 AM c:\HP\BORING_PROFILE\Rgeonc10.dgn

BORING No.: B-113
LOCATION: 400+57.782 (25.266' RT)
ELEVATION: 9.88
HAMMER: SAFETY
TYPE OF RIG: B53
DATE: 07/01/05

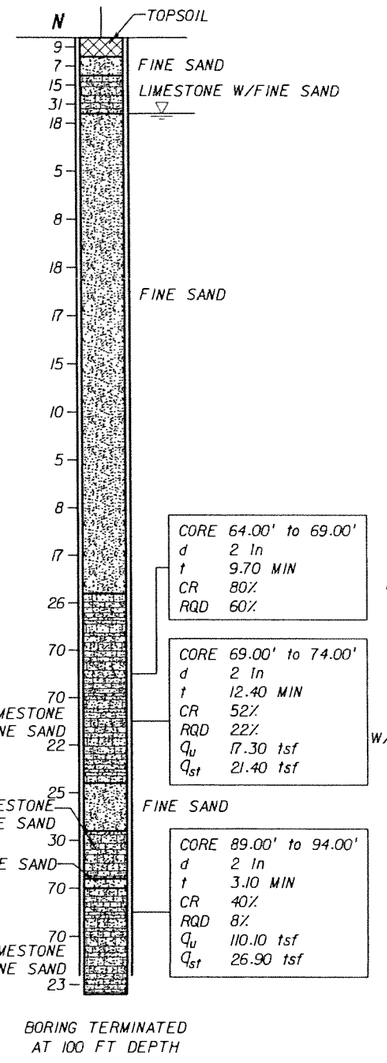

BORING TERMINATED AT 100 FT DEPTH

BORING No.: B-114
LOCATION: 403+19.815 (4.726' RT)
ELEVATION: 9.16
HAMMER: SAFETY
TYPE OF RIG: B-53
DATE: 07/02/05

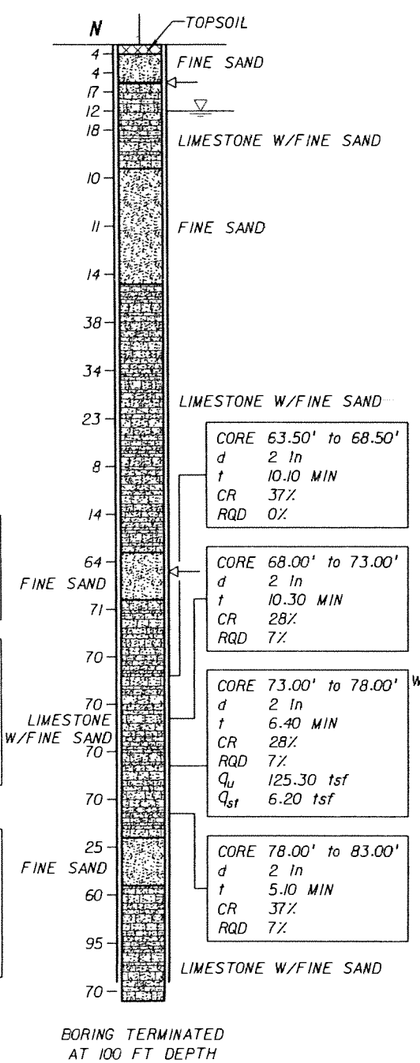

BORING TERMINATED AT 100 FT DEPTH

BORING No.: B-115
LOCATION: 406+80.202 (9.131' LT)
ELEVATION: 10.00
HAMMER: SAFETY
TYPE OF RIG: B-53
DATE: 09/09/05

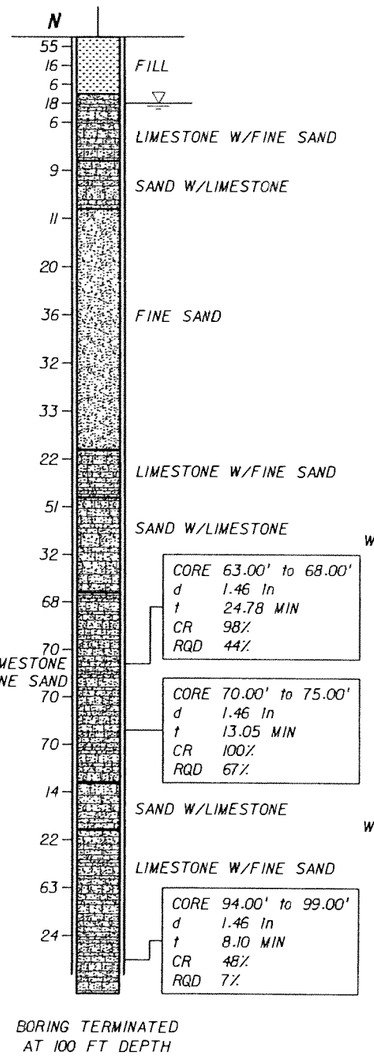

BORING TERMINATED AT 100 FT DEPTH

BORING No.: B-116
LOCATION: 409+38.047 (50.201' LT)
ELEVATION: 9.89
HAMMER: SAFETY
TYPE OF RIG: B-53
DATE: 09/08/05

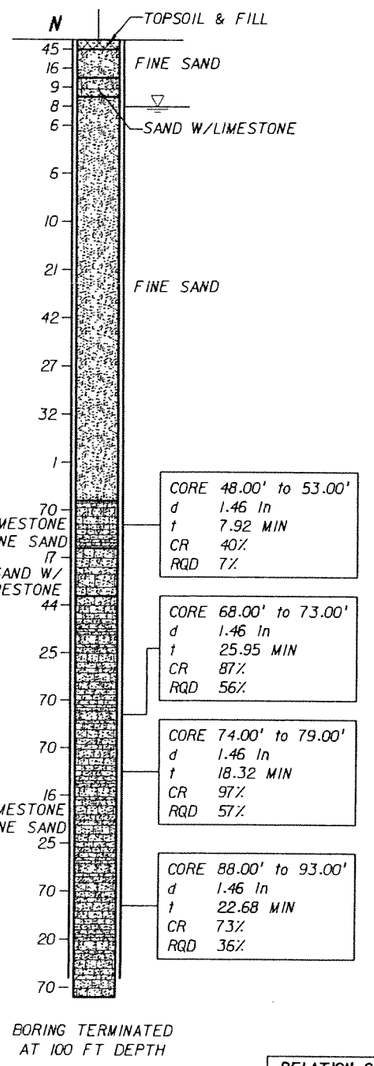

BORING TERMINATED AT 100 FT DEPTH

LEGEND:

- ASPHALT PAVEMENT
- (TOPSOIL) BLACK/DARK BROWN/DARK GRAY TO GRAY, SILTY SAND WITH ROOTS, ORGANICS, AND OTHER MATERIALS
- (FILL) LIMEROCK FRAGMENTS, COARSE GRAVEL TO SILT SIZE, IN SHADES OF BROWN OR GRAY, OCCASIONALLY MIXED WITH TOP SOIL
- (FINE SAND) VERY LOOSE TO VERY DENSE, FINE-SAND-SIZE MATERIAL IN SHADES OF BROWN, GRAY, OR OTHERS COLORS, OCCASIONALLY ORGANIC STAINED
- (SILTY SAND) SILTY SAND-SIZE MATERIAL IN SHADES OF BROWN/GRAY/OTHER COLORS POSSIBLY DISINTEGRATED SEDIMETARY ROCK
- (LIMESTONE WITH FINE SAND) VUGGY, SEDIMENTARY ROCK MADE OF $CaCO_3$, WITH SAND-SIZE MATERIAL, IN SHADES OF BROWN/GRAY/OTHER COLORS, OCCASIONALLY WITH SANDSTONE AND SHELL FRAGMENTS
- (SAND WITH LIMESTONE) SAND-SIZE MATERIAL WITH LIMESTONE FRAGMENTS IN SHADES OF BROWN, GRAY, OR OTHER COLORS, SOMETIMES WITH SANDSTONE FRAGMENTS
- (ORGANICS) DARK GRAY TO BLACK, SILT TO FINE-SAND-SIZE MATERIAL HAVING ORGANIC CONTENT> 5%
- (SANDSTONE WITH SAND) SEDIMENTARY ROCK MADE OF SAND-SIZE MATERIAL IN $CaCO_3$ MATRIX, IN SHADES OF BROWN OR GRAY, WITH FINE-SAND-SIZE MATERIAL
- (SAND WITH SANDSTONE) SAND-SIZE MATERIAL WITH SANDSTONE FRAGMENTS IN SHADES OF BROWN/GRAY/OTHER COLORS
- (SANDY SILT) SANDY, SILT-SIZE MATERIAL IN SHADES OF BLACK/BROWN/GRAY, POSSIBLY DISINTEGRATED SEDIMETARY ROCK

NOTES:

- WATER TABLE AT THE TIME OF DRILLING
- N — NUMBERS TO THE LEFT OF BORINGS INDICATE SPT VALUE FOR 1 FOOT (12") PENETRATION (UNLESS OTHERWISE NOTED)
- d — DIAMETER
- t — TIME
- NA — NOT AVAILABLE
- CR — CORE RECOVERY
- RQD — ROCK QUALITY DESIGNATION
- δ — UNIT WEIGHT lb/cft
- q_u — UNCONFINED COMPRESSION AT SAMPLE DEPTH (tsf)
- q_{st} — SPLIT TENSILE STRENGTH AT SAMPLE DEPTH (tsf)
- ⟵ — LOSS OF CIRCULATION
- WOH — WEIGHT OT THE HAMMER
- CASING USED

NOTES:

1. THE LIMESTONE MAY BE HARD TO EXCAVATE AND DEWATER; SPECIAL EQUIPMENT AND TOOLS MAY BE REQUIRED.
2. BORING LOCATIONS (STATIONS AND OFFSETS) BASED ON 70% PRELIMINARY ENGINEERING ALIGNMENT. SEE BORING LOCATION PLANS FOR SPECIFIC COORDINATE DATA.

VERTICAL SCALE: 1"=16'

ENVIRONMENTAL CLASSIFICATION

SEE THE GEOTECHNICAL REPORT

RELATION OF RQD AND IN-SITU ROCK QUALITY	
RQD (%)	ROCK QUALITY
90-100	EXCELLENT
75-90	GOOD
50-75	FAIR
25-50	POOR
0-25	VERY POOR

GRANULAR MATERIALS

RELATIVE DENSITY	SAFETY HAMMER SPT N-VALUE (BLOW/FOOT)	AUTOMATIC HAMMER SPT N-VALUE (BLOW/FOOT)
VERY LOOSE	LESS THAN 4	LESS THAN 3
LOOSE	4 - 10	3 - 7
MEDIUM DENSE	10 - 30	7 - 21
DENSE	30 - 50	21 - 35
VERY DENSE	GREATER THAN 50	GREATER THAN 35

SK	05-06				
Designed by	Date				
SK/EP	05-06				
Drawn by	Date				
AK	05-06				
Checked by	Date				
Approved by	Date	No.	Date	By / Chk	App.	Revisions

NORTH CORRIDOR METRORAIL EXTENSION - PRELIMINARY ENGINEERING (100% SUBMITTAL)

MIAMI-DADE COUNTY — MIAMI-DADE TRANSIT

PARSONS
7500 CORPORATE CENTER DRIVE, SUITE 500
MIAMI, FLORIDA 33126
PHONE: (786) 464-1000 FAX: (786) 845-7119
CERTIFICATE OF AUTHORIZATION NO. 1838
Approved / Date

HP CONSULTANTS INC.
License No. 9509
ARVIND KUMBHOJKAR, PH.D, P.E.
License No. 41067
10220 SW 107 Street
Miami, Fl 33176 Ph:(305)596-1585
Approved / Date

GEOTECHNICAL

REPORT OF CORE BORINGS

Scale 1" = 16' | Drawing GE-050 | Sheet 4 of 12

5/4/2006 1:45:16 AM c:\HP\BORING_PROFILE\Rgeonc10.dgn

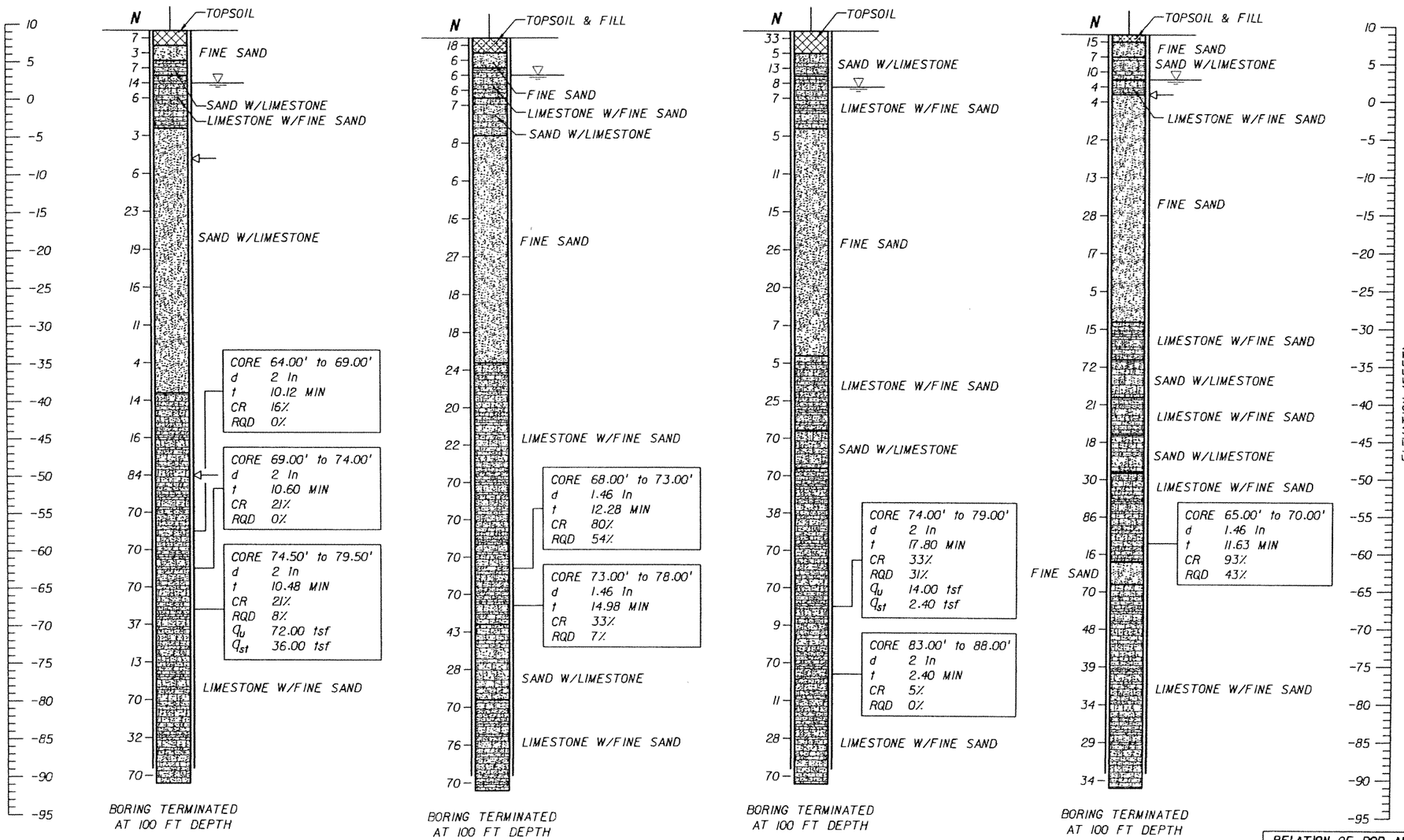

LEGEND:

- ASPHALT PAVEMENT
- (TOPSOIL) BLACK/DARK BROWN/DARK GRAY TO GRAY, SILTY SAND WITH ROOTS, ORGANICS, AND OTHER MATERIALS
- (FILL) LIMEROCK FRAGMENTS, COARSE GRAVEL TO SILT SIZE, IN SHADES OF BROWN OR GRAY, OCCASIONALLY MIXED WITH TOP SOIL
- (FINE SAND) VERY LOOSE TO VERY DENSE, FINE-SAND-SIZE MATERIAL IN SHADES OF BROWN, GRAY, OR OTHERS COLORS, OCCASIONALLY ORGANIC STAINED
- (SILTY SAND) SILTY SAND-SIZE MATERIAL IN SHADES OF BROWN/GRAY/OTHER COLORS POSSIBLY DISINTEGRATED SEDIMETARY ROCK
- (LIMESTONE WITH FINE SAND) VUGGY, SEDIMENTARY ROCK MADE OF $CaCO_3$, WITH SAND-SIZE MATERIAL, IN SHADES OF BROWN/GRAY/OTHER COLORS, OCCASIONALLY WITH SANDSTONE AND SHELL FRAGMENTS
- (SAND WITH LIMESTONE) SAND-SIZE MATERIAL WITH LIMESTONE FRAGMENTS IN SHADES OF BROWN, GRAY, OR OTHER COLORS, SOMETIMES WITH SANDSTONE FRAGMENTS
- (ORGANICS) DARK GRAY TO BLACK, SILT TO FINE-SAND-SIZE MATERIAL HAVING ORGANIC CONTENT > 5%
- (SANDSTONE WITH SAND) SEDIMENTARY ROCK MADE OF SAND-SIZE MATERIAL IN $CaCO_3$ MATRIX, IN SHADES OF BROWN OR GRAY, WITH FINE-SAND-SIZE MATERIAL
- (SAND WITH SANDSTONE) SAND-SIZE MATERIAL WITH SANDSTONE FRAGMENTS IN SHADES OF BROWN/GRAY/OTHER COLORS
- (SANDY SILT) SANDY, SILT-SIZE MATERIAL IN SHADES OF BLACK/BROWN/GRAY, POSSIBLY DISINTEGRATED SEDIMETARY ROCK

NOTES:

- WATER TABLE AT THE TIME OF DRILLING
- **N** NUMBERS TO THE LEFT OF BORINGS INDICATE SPT VALUE FOR 1 FOOT (12") PENETRATION (UNLESS OTHERWISE NOTED)
- d DIAMETER
- t TIME
- NA NOT AVAILABLE
- CR CORE RECOVERY
- RQD ROCK QUALITY DESIGNATION
- γ UNIT WEIGHT lb/cft
- q_u UNCONFINED COMPRESSION AT SAMPLE DEPTH (tsf)
- q_{st} SPLIT TENSILE STRENGTH AT SAMPLE DEPTH (tsf)
- ⟵ LOSS OF CIRCULATION
- WOH WEIGHT OT THE HAMMER
- CASING USED

NOTES:

1. THE LIMESTONE MAY BE HARD TO EXCAVATE AND DEWATER; SPECIAL EQUIPMENT AND TOOLS MAY BE REQUIRED.
2. BORING LOCATIONS (STATIONS AND OFFSETS) BASED ON 70% PRELIMINARY ENGINEERING ALIGNMENT. SEE BORING LOCATION PLANS FOR SPECIFIC COORDINATE DATA.

VERTICAL SCALE: 1"=16'

ENVIRONMENTAL CLASSIFICATION

SEE THE GEOTECHNICAL REPORT

RELATION OF RQD AND IN-SITU ROCK QUALITY

RQD (%)	ROCK QUALITY
90-100	EXCELLENT
75-90	GOOD
50-75	FAIR
25-50	POOR
0-25	VERY POOR

GRANULAR MATERIALS

RELATIVE DENSITY	SAFETY HAMMER SPT N-VALUE (BLOW/FOOT)	AUTOMATIC HAMMER SPT N-VALUE (BLOW/FOOT)
VERY LOOSE	LESS THAN 4	LESS THAN 3
LOOSE	4 - 10	3 - 7
MEDIUM DENSE	10 - 30	7 - 21
DENSE	30 - 50	21 - 35
VERY DENSE	GREATER THAN 50	GREATER THAN 35

SK	05-06				
Designed by	Date				
SK/EP	05-06				
Drawn by	Date				
AK	05-06				
Checked by	Date				
Approved by	Date	No.	Date	By / Chk.	App.	Revisions

NORTH CORRIDOR METRORAIL EXTENSION - PRELIMINARY ENGINEERING (100% SUBMITTAL)

MIAMI-DADE COUNTY

MIAMI-DADE TRANSIT

PARSONS
7600 CORPORATE CENTER DRIVE, SUITE 500
MIAMI, FLORIDA 33126
PHONE: (786) 464-1000 FAX: (786) 845-7119
CERTIFICATE OF AUTHORIZATION NO. 1838

Approved | Date

HP CONSULTANTS INC.
License No. 9509
ARVIND KUMBHOJKAR, PH.D, P.E.
License No. 41067
10220 SW 107 Street
Miami, Fl 33176 Ph:(305)596-1585

Approved | Date

GEOTECHNICAL

REPORT OF CORE BORINGS

Scale 1" = 16' | Drawing GE-051 | Sheet 443

5/4/2006 1:45:38 AM c:\HP\BORING_PROFILE\Rgeonc10.dgn

BORING No.: B-121
LOCATION: 423+27.842 (19.676' LT)
ELEVATION: 8.67
HAMMER: SAFETY
TYPE OF RIG: B-53
DATE: 09/05/05

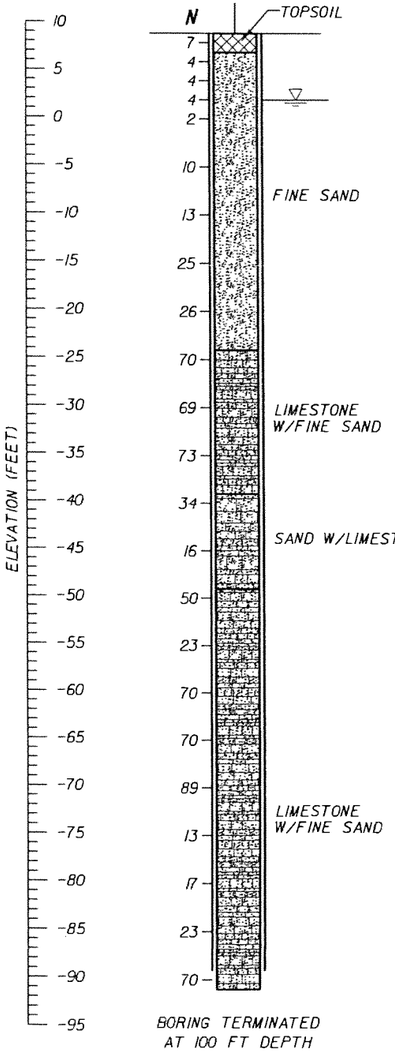

BORING TERMINATED AT 100 FT DEPTH

BORING No.: B-122
LOCATION: 425+59.859 (14.750' LT)
ELEVATION: 9.53
HAMMER: SAFETY
TYPE OF RIG: B-53
DATE: 06/24/05

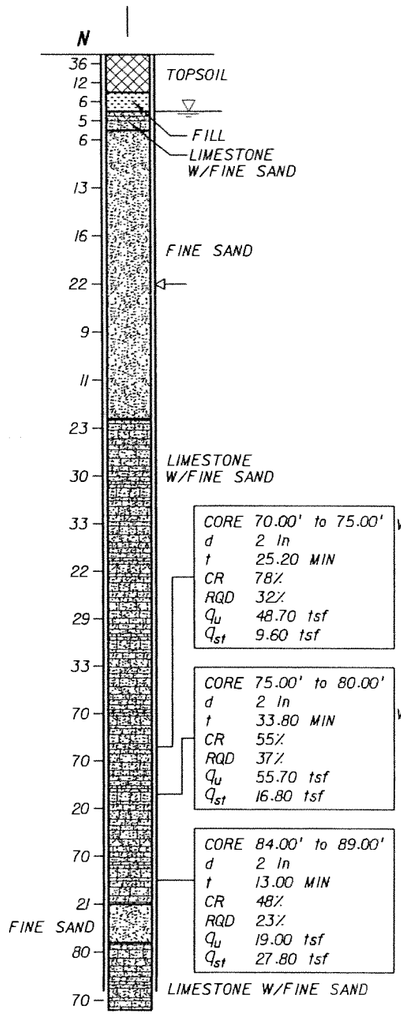

BORING TERMINATED AT 100 FT DEPTH

BORING No.: B-123
LOCATION: 430+16.048 (14.536' LT)
ELEVATION: 7.90
HAMMER: SAFETY
TYPE OF RIG: B-53
DATE: 06/26/05

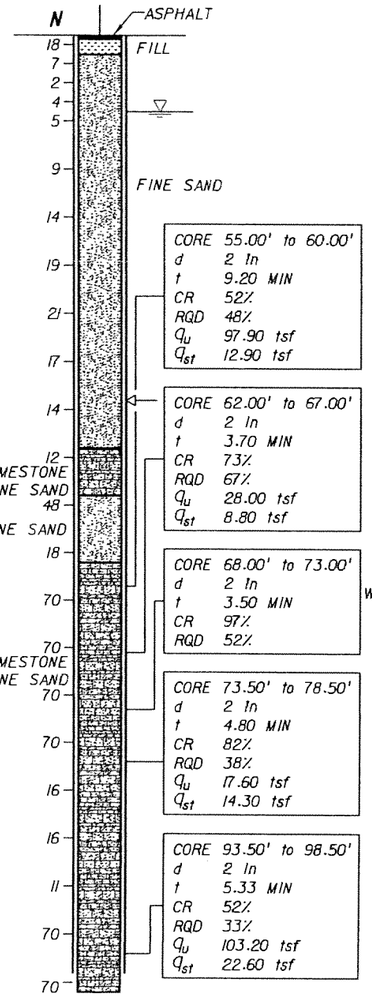

BORING TERMINATED AT 100 FT DEPTH

VERTICAL SCALE: 1"=16'

BORING No.: B-124
LOCATION: 434+29.954 (15.547' LT)
ELEVATION: 7.31
HAMMER: SAFETY
TYPE OF RIG: B-53
DATE: 06/29/05

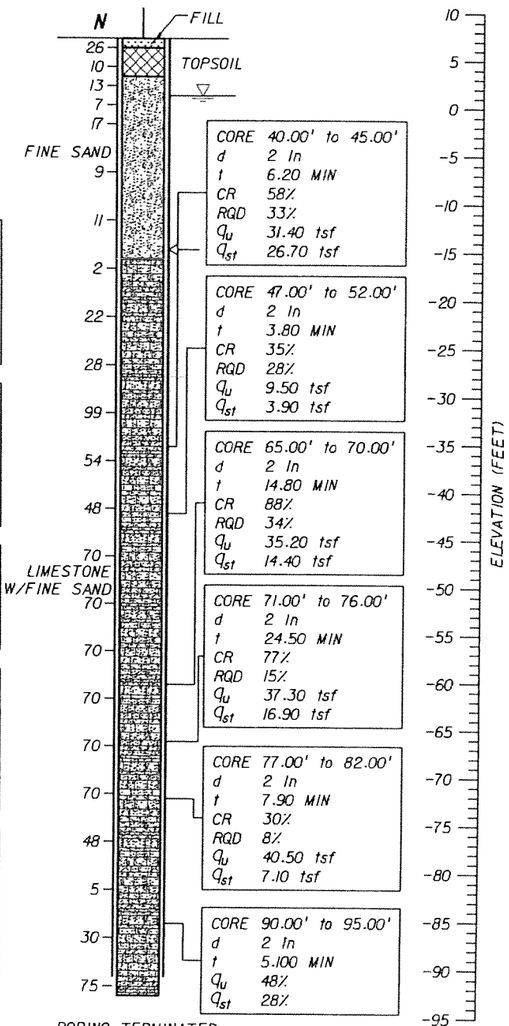

BORING TERMINATED AT 100 FT DEPTH

LEGEND:

- ASPHALT PAVEMENT
- (TOPSOIL) BLACK/DARK BROWN/DARK GRAY TO GRAY, SILTY SAND WITH ROOTS, ORGANICS, AND OTHER MATERIALS
- (FILL) LIMEROCK FRAGMENTS, COARSE GRAVEL TO SILT SIZE, IN SHADES OF BROWN OR GRAY, OCCASIONALLY MIXED WITH TOP SOIL
- (FINE SAND) VERY LOOSE TO VERY DENSE, FINE-SAND-SIZE MATERIAL IN SHADES OF BROWN, GRAY, OR OTHERS COLORS, OCCASIONALLY ORGANIC STAINED
- (SILTY SAND) SILTY SAND-SIZE MATERIAL IN SHADES OF BROWN/GRAY/OTHER COLORS POSSIBLY DISINTEGRATED SEDIMETARY ROCK
- (LIMESTONE WITH FINE SAND) VUGGY, SEDIMENTARY ROCK MADE OF $CaCO_3$, WITH SAND-SIZE MATERIAL, IN SHADES OF BROWN/GRAY/OTHER COLORS, OCCASIONALLY WITH SANDSTONE AND SHELL FRAGMENTS
- (SAND WITH LIMESTONE) SAND-SIZE MATERIAL WITH LIMESTONE FRAGMENTS IN SHADES OF BROWN, GRAY, OR OTHER COLORS, SOMETIMES WITH SANDSTONE FRAGMENTS
- (ORGANICS) DARK GRAY TO BLACK, SILT TO FINE-SAND-SIZE MATERIAL HAVING ORGANIC CONTENT> 5%
- (SANDSTONE WITH SAND) SEDIMENTARY ROCK MADE OF SAND-SIZE MATERIAL IN $CaCO_3$ MATRIX, IN SHADES OF BROWN OR GRAY, WITH FINE-SAND-SIZE MATERIAL
- (SAND WITH SANDSTONE) SAND-SIZE MATERIAL WITH SANDSTONE FRAGMENTS IN SHADES OF BROWN/GRAY/OTHER COLORS
- (SANDY SILT) SANDY, SILT-SIZE MATERIAL IN SHADES OF BLACK/BROWN/GRAY, POSSIBLY DISINTEGRATED SEDIMETARY ROCK

NOTES:

- WATER TABLE AT THE TIME OF DRILLING
- **N** NUMBERS TO THE LEFT OF BORINGS INDICATE SPT VALUE FOR 1 FOOT (12") PENETRATION (UNLESS OTHERWISE NOTED)
- d DIAMETER
- t TIME
- NA NOT AVAILABLE
- CR CORE RECOVERY
- RQD ROCK QUALITY DESIGNATION
- γ UNIT WEIGHT lb/cft
- q_u UNCONFINED COMPRESSION AT SAMPLE DEPTH (tsf)
- q_{st} SPLIT TENSILE STRENGTH AT SAMPLE DEPTH (tsf)
- ⟵ LOSS OF CIRCULATION
- WOH WEIGHT OT THE HAMMER
- CASING USED

GRANULAR MATERIALS

RELATIVE DENSITY	SAFETY HAMMER SPT N-VALUE (BLOW/FOOT)	AUTOMATIC HAMMER SPT N-VALUE (BLOW/FOOT)
VERY LOOSE	LESS THAN 4	LESS THAN 3
LOOSE	4 - 10	3 - 7
MEDIUM DENSE	10 - 30	7 - 21
DENSE	30 - 50	21 - 35
VERY DENSE	GREATER THAN 50	GREATER THAN 35

NOTES:

1. THE LIMESTONE MAY BE HARD TO EXCAVATE AND DEWATER; SPECIAL EQUIPMENT AND TOOLS MAY BE REQUIRED.
2. BORING LOCATIONS (STATIONS AND OFFSETS) BASED ON 70% PRELIMINARY ENGINEERING ALIGNMENT. SEE BORING LOCATION PLANS FOR SPECIFIC COORDINATE DATA.

ENVIRONMENTAL CLASSIFICATION

SEE THE GEOTECHNICAL REPORT

RELATION OF RQD AND IN-SITU ROCK QUALITY	
RQD (%)	ROCK QUALITY
90-100	EXCELLENT
75-90	GOOD
50-75	FAIR
25-50	POOR
0-25	VERY POOR

SK	05-06				
Designed by	Date				
SK/EP	05-06				
Drawn by	Date				
AK	05-06				
Checked by	Date				
Approved by	Date	No.	Date	By / Chk	App.	Revisions

NORTH CORRIDOR METRORAIL EXTENSION - PRELIMINARY ENGINEERING (100% SUBMITTAL)

MIAMI-DADE COUNTY — MIAMI-DADE TRANSIT

PARSONS
7600 CORPORATE CENTER DRIVE, SUITE 500
MIAMI, FLORIDA 33126
PHONE: (786) 454-1000 FAX: (786) 845-7119
CERTIFICATE OF AUTHORIZATION NO. 1838

Approved / Date

HP CONSULTANTS INC.
License No. 9509
ARVIND KUMBHOJKAR, PH.D, P.E.
License No. 41067
10220 SW 107 Street
Miami, Fl 33176 Ph:(305)596-1585

Approved / Date

GEOTECHNICAL

REPORT OF CORE BORINGS

Scale 1" = 16' | Drawing GE-052 | Sheet

5/4/2006 1:46:11 AM c:\HP\BORING_PROFILE\Rgeonc11.dgn

BORING No.: B-125
LOCATION: 436+47.098 (16.207' LT)
ELEVATION: 7.31
HAMMER: SAFETY
TYPE OF RIG: B-53
DATE: 07/02/05

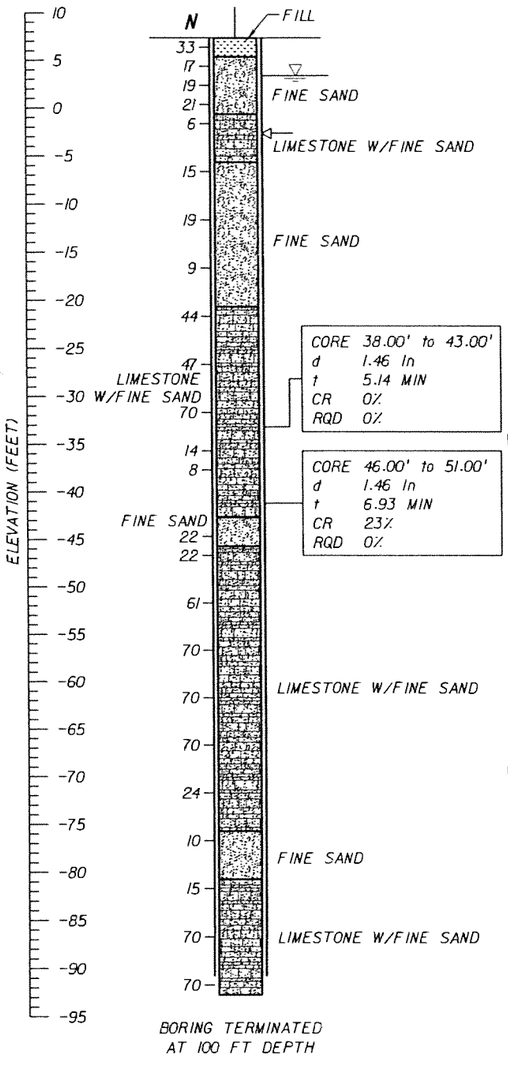

BORING TERMINATED AT 100 FT DEPTH

BORING No.: B-126
LOCATION: 439+45.578 (24.731' LT)
ELEVATION: 7.81
HAMMER: SAFETY
TYPE OF RIG: B-53
DATE: 06/25/05

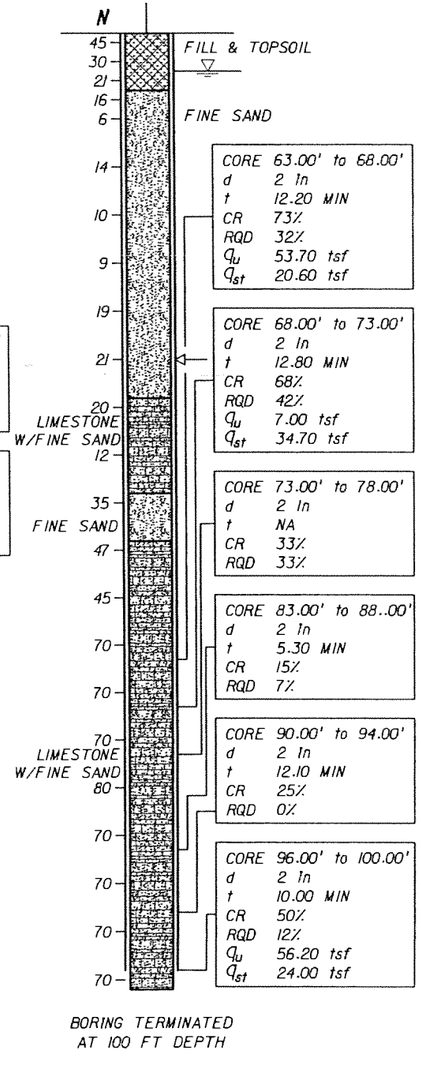

BORING TERMINATED AT 100 FT DEPTH

BORING No.: B-127
LOCATION: 443+20.363 (21.873' LT)
ELEVATION: 7.79
HAMMER: SAFETY
TYPE OF RIG: B-53
DATE: 08/27/05

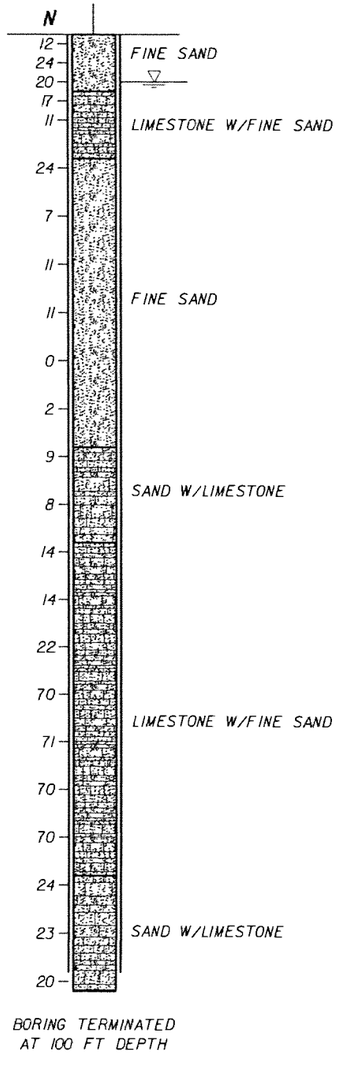

BORING TERMINATED AT 100 FT DEPTH

BORING No.: B-128
LOCATION: 445+47.227 (17.165' LT)
ELEVATION: 7.09
HAMMER: SAFETY
TYPE OF RIG: B-53
DATE: 08/28/05

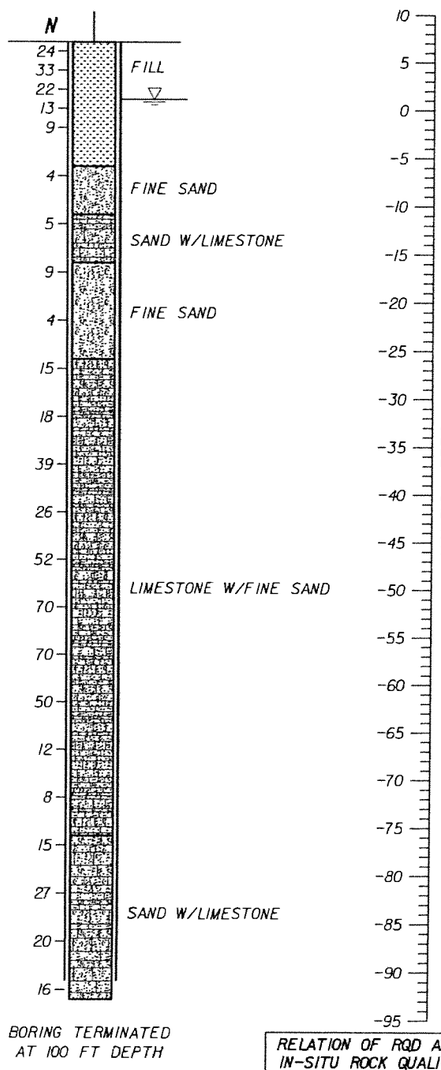

BORING TERMINATED AT 100 FT DEPTH

VERTICAL SCALE: 1"=16'

LEGEND:

- ASPHALT PAVEMENT
- (TOPSOIL) BLACK/DARK BROWN/DARK GRAY TO GRAY, SILTY SAND WITH ROOTS, ORGANICS, AND OTHER MATERIALS
- (FILL) LIMEROCK FRAGMENTS, COARSE GRAVEL TO SILT SIZE, IN SHADES OF BROWN OR GRAY, OCCASIONALLY MIXED WITH TOP SOIL
- (FINE SAND) VERY LOOSE TO VERY DENSE, FINE-SAND-SIZE MATERIAL IN SHADES OF BROWN, GRAY, OR OTHERS COLORS, OCCASIONALLY ORGANIC STAINED
- (SILTY SAND) SILTY SAND-SIZE MATERIAL IN SHADES OF BROWN/GRAY/OTHER COLORS POSSIBLY DISINTEGRATED SEDIMETARY ROCK
- (LIMESTONE WITH FINE SAND) VUGGY, SEDIMENTARY ROCK MADE OF $CaCO_3$, WITH SAND-SIZE MATERIAL, IN SHADES OF BROWN/GRAY/OTHER COLORS, OCCASIONALLY WITH SANDSTONE AND SHELL FRAGMENTS
- (SAND WITH LIMESTONE) SAND-SIZE MATERIAL WITH LIMESTONE FRAGMENTS IN SHADES OF BROWN, GRAY, OR OTHER COLORS, SOMETIMES WITH SANDSTONE FRAGMENTS
- (ORGANICS) DARK GRAY TO BLACK, SILT TO FINE-SAND-SIZE MATERIAL HAVING ORGANIC CONTENT > 5%
- (SANDSTONE WITH SAND) SEDIMENTARY ROCK MADE OF SAND-SIZE MATERIAL IN $CaCO_3$ MATRIX, IN SHADES OF BROWN OR GRAY, WITH FINE-SAND-SIZE MATERIAL
- (SAND WITH SANDSTONE) SAND-SIZE MATERIAL WITH SANDSTONE FRAGMENTS IN SHADES OF BROWN/GRAY/OTHER COLORS
- (SANDY SILT) SANDY, SILT-SIZE MATERIAL IN SHADES OF BLACK/BROWN/GRAY, POSSIBLY DISINTEGRATED SEDIMETARY ROCK

NOTES:

- WATER TABLE AT THE TIME OF DRILLING
- N — NUMBERS TO THE LEFT OF BORINGS INDICATE SPT VALUE FOR 1 FOOT (12") PENETRATION (UNLESS OTHERWISE NOTED)
- d — DIAMETER
- t — TIME
- NA — NOT AVAILABLE
- CR — CORE RECOVERY
- RQD — ROCK QUALITY DESIGNATION
- δ — UNIT WEIGHT lb/cft
- q_u — UNCONFINED COMPRESSION AT SAMPLE DEPTH (tsf)
- q_{st} — SPLIT TENSILE STRENGTH AT SAMPLE DEPTH (tsf)
- ⟵ — LOSS OF CIRCULATION
- WOH — WEIGHT OT THE HAMMER
- CASING USED

NOTES:

1. THE LIMESTONE MAY BE HARD TO EXCAVATE AND DEWATER; SPECIAL EQUIPMENT AND TOOLS MAY BE REQUIRED.
2. BORING LOCATIONS (STATIONS AND OFFSETS) BASED ON 70% PRELIMINARY ENGINEERING ALIGNMENT. SEE BORING LOCATION PLANS FOR SPECIFIC COORDINATE DATA.

ENVIRONMENTAL CLASSIFICATION

SEE THE GEOTECHNICAL REPORT

RELATION OF RQD AND IN-SITU ROCK QUALITY

RQD (%)	ROCK QUALITY
90-100	EXCELLENT
75-90	GOOD
50-75	FAIR
25-50	POOR
0-25	VERY POOR

GRANULAR MATERIALS

RELATIVE DENSITY	SAFETY HAMMER SPT N-VALUE (BLOW/FOOT)	AUTOMATIC HAMMER SPT N-VALUE (BLOW/FOOT)
VERY LOOSE	LESS THAN 4	LESS THAN 3
LOOSE	4 - 10	3 - 7
MEDIUM DENSE	10 - 30	7 - 21
DENSE	30 - 50	21 - 35
VERY DENSE	GREATER THAN 50	GREATER THAN 35

SK Designed by 05-06 Date
SK/EP Drawn by 05-06 Date
AK Checked by 05-06 Date
Approved by Date

No.	Date	By / Chk	App.	Revisions

NORTH CORRIDOR METRORAIL EXTENSION - PRELIMINARY ENGINEERING (100% SUBMITTAL)

MIAMI-DADE COUNTY
MIAMI-DADE TRANSIT

PARSONS
7600 CORPORATE CENTER DRIVE, SUITE 500
MIAMI, FLORIDA 33126
PHONE: (786) 464-1000 FAX: (786) 845-7119
CERTIFICATE OF AUTHORIZATION NO. 1838
Approved Date

HP CONSULTANTS INC.
License No. 9509
ARVIND KUMBHOJKAR, PH.D, P.E.
License No. 41067
10220 SW 107 Street
Miami, Fl 33176 Ph:(305)596-1585
Approved Date

GEOTECHNICAL

REPORT OF CORE BORINGS

Scale 1" = 16' | Drawing GE-053 | Sheet

5/4/2006 1:46:28 AM c:\HP\BORING_PROFILE\Rgeonc11.dgn

BORING No.: B-129
LOCATION: 448+05.037 (10.991' LT)
ELEVATION: 7.16
HAMMER: SAFETY
TYPE OF RIG: B-53
DATE: 08/20/05

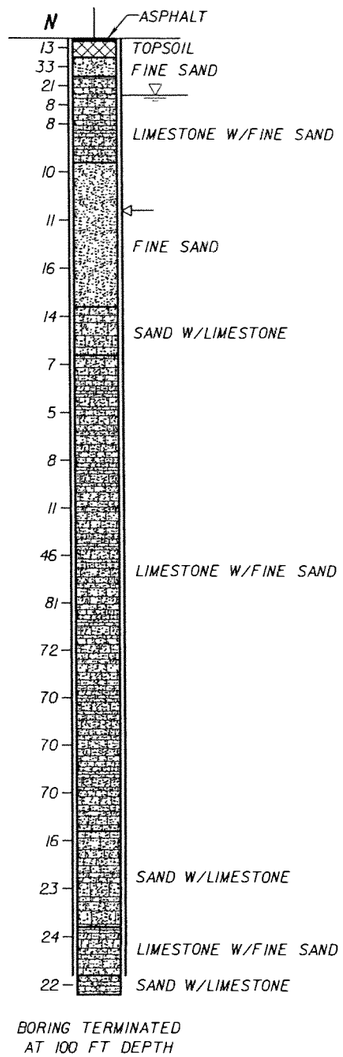

BORING TERMINATED AT 100 FT DEPTH

BORING No.: B-130
LOCATION: 451+53.887 (6.089' RT)
ELEVATION: 7.38
HAMMER: SAFETY
TYPE OF RIG: B-53
DATE: 08/10/05

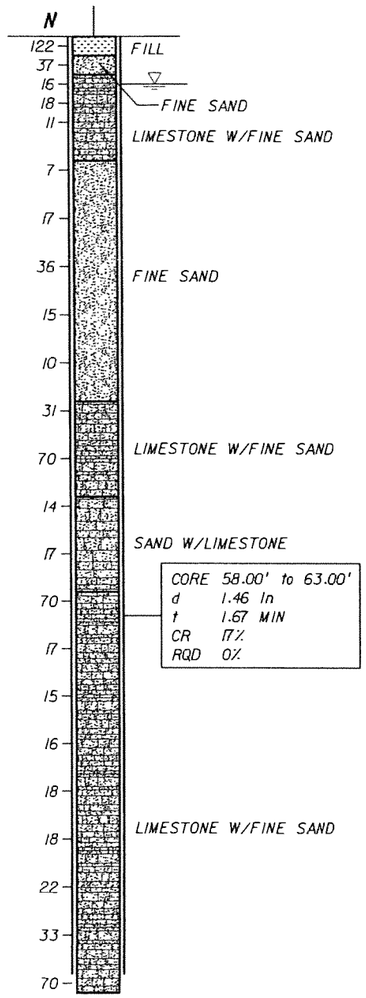

CORE 58.00' to 63.00'
d 1.46 In
t 1.67 MIN
CR 17%
RQD 0%

BORING TERMINATED AT 100 FT DEPTH

BORING No.: B-131
LOCATION: 453+68.560 (14.868' RT)
ELEVATION: 8.77
HAMMER: SAFETY
TYPE OF RIG: CM-75
DATE: 08/09/05

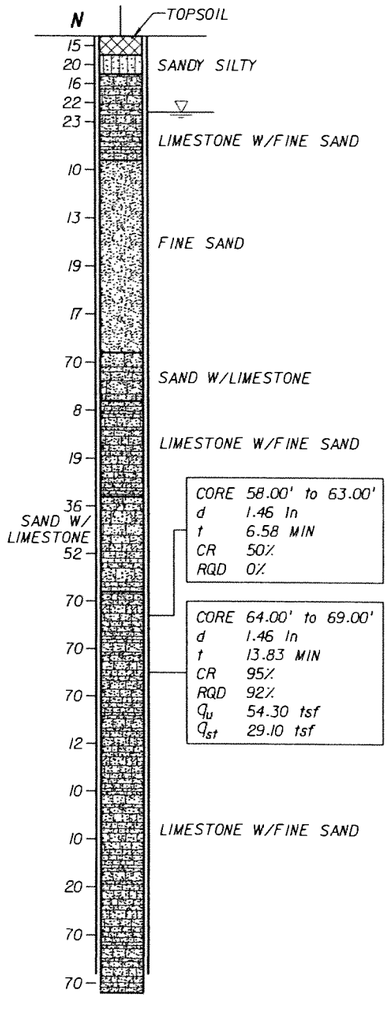

CORE 58.00' to 63.00'
d 1.46 In
t 6.58 MIN
CR 50%
RQD 0%

CORE 64.00' to 69.00'
d 1.46 In
t 13.83 MIN
CR 95%
RQD 92%
q_u 54.30 tsf
q_{st} 29.10 tsf

BORING TERMINATED AT 100 FT DEPTH

BORING No.: B-132
LOCATION: 456+39.159 (1.896' LT)
ELEVATION: 8.30
HAMMER: SAFETY
TYPE OF RIG: B-53
DATE: 0/08/05

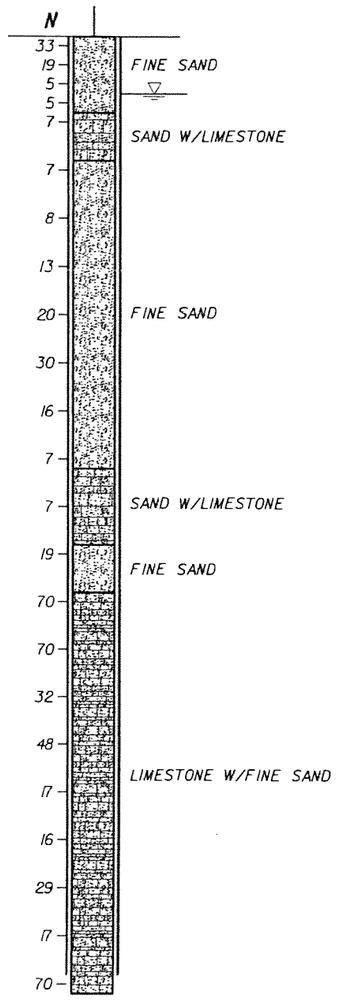

BORING TERMINATED AT 100 FT DEPTH

VERTICAL SCALE: 1"=16'

LEGEND:

- ASPHALT PAVEMENT
- (TOPSOIL) BLACK/DARK BROWN/DARK GRAY TO GRAY, SILTY SAND WITH ROOTS, ORGANICS, AND OTHER MATERIALS
- (FILL) LIMEROCK FRAGMENTS, COARSE GRAVEL TO SILT SIZE, IN SHADES OF BROWN OR GRAY, OCCASIONALLY MIXED WITH TOP SOIL
- (FINE SAND) VERY LOOSE TO VERY DENSE, FINE-SAND-SIZE MATERIAL IN SHADES OF BROWN, GRAY, OR OTHERS COLORS, OCCASIONALLY ORGANIC STAINED
- (SILTY SAND) SILTY SAND-SIZE MATERIAL IN SHADES OF BROWN/GRAY/OTHER COLORS POSSIBLY DISINTEGRATED SEDIMETARY ROCK
- (LIMESTONE WITH FINE SAND) VUGGY, SEDIMENTARY ROCK MADE OF $CaCO_3$, WITH SAND-SIZE MATERIAL, IN SHADES OF BROWN/GRAY/OTHER COLORS, OCCASIONALLY WITH SANDSTONE AND SHELL FRAGMENTS
- (SAND WITH LIMESTONE) SAND-SIZE MATERIAL WITH LIMESTONE FRAGMENTS IN SHADES OF BROWN, GRAY, OR OTHER COLORS, SOMETIMES WITH SANDSTONE FRAGMENTS
- (ORGANICS) DARK GRAY TO BLACK, SILT TO FINE-SAND-SIZE MATERIAL HAVING ORGANIC CONTENT> 5%
- (SANDSTONE WITH SAND) SEDIMENTARY ROCK MADE OF SAND-SIZE MATERIAL IN $CaCO_3$ MATRIX, IN SHADES OF BROWN OR GRAY, WITH FINE-SAND-SIZE MATERIAL
- (SAND WITH SANDSTONE) SAND-SIZE MATERIAL WITH SANDSTONE FRAGMENTS IN SHADES OF BROWN/GRAY/ OTHER COLORS
- (SANDY SILT) SANDY, SILT-SIZE MATERIAL IN SHADES OF BLACK/BROWN/GRAY, POSSIBLY DISINTEGRATED SEDIMETARY ROCK

NOTES:

- WATER TABLE AT THE TIME OF DRILLING
- N — NUMBERS TO THE LEFT OF BORINGS INDICATE SPT VALUE FOR 1 FOOT (12") PENETRATION (UNLESS OTHERWISE NOTED)
- d — DIAMETER
- t — TIME
- NA — NOT AVAILABLE
- CR — CORE RECOVERY
- RQD — ROCK QUALITY DESIGNATION
- δ — UNIT WEIGHT lb/cft
- q_u — UNCONFINED COMPRESSION AT SAMPLE DEPTH (tsf)
- q_{st} — SPLIT TENSILE STRENGTH AT SAMPLE DEPTH (tsf)
- ⇦ — LOSS OF CIRCULATION
- WOH — WEIGHT OT THE HAMMER
- CASING USED

NOTES:

1. THE LIMESTONE MAY BE HARD TO EXCAVATE AND DEWATER; SPECIAL EQUIPMENT AND TOOLS MAY BE REQUIRED.
2. BORING LOCATIONS (STATIONS AND OFFSETS) BASED ON 70% PRELIMINARY ENGINEERING ALIGNMENT. SEE BORING LOCATION PLANS FOR SPECIFIC COORDINATE DATA.

ENVIRONMENTAL CLASSIFICATION

SEE THE GEOTECHNICAL REPORT

RELATION OF RQD AND IN-SITU ROCK QUALITY

RQD (%)	ROCK QUALITY
90-100	EXCELLENT
75-90	GOOD
50-75	FAIR
25-50	POOR
0-25	VERY POOR

GRANULAR MATERIALS

RELATIVE DENSITY	SAFETY HAMMER SPT N-VALUE (BLOW/FOOT)	AUTOMATIC HAMMER SPT N-VALUE (BLOW/FOOT)
VERY LOOSE	LESS THAN 4	LESS THAN 3
LOOSE	4 - 10	3 - 7
MEDIUM DENSE	10 - 30	7 - 21
DENSE	30 - 50	21 - 35
VERY DENSE	GREATER THAN 50	GREATER THAN 35

SK	05-06				
Designed by	Date				
SK/EP	05-06				
Drawn by	Date				
AK	05-06				
Checked by	Date				
Approved by	Date	No.	Date	By / Chk	App.	Revisions

NORTH CORRIDOR METRORAIL EXTENSION - PRELIMINARY ENGINEERING (100% SUBMITTAL)

MIAMI-DADE COUNTY — MIAMI-DADE TRANSIT

PARSONS
7600 CORPORATE CENTER DRIVE, SUITE 500
MIAMI, FLORIDA 33126
PHONE: (786) 464-1000 FAX: (786) 845-7115
CERTIFICATE OF AUTHORIZATION NO. 1838
Approved Date

HP CONSULTANTS INC.
License No. 9509
ARVIND KUMBHOJKAR, PH.D, P.E.
License No. 41067
10220 SW 107 Street
Miami, Fl 33176 Ph:(305)596-1585
Approved Date

GEOTECHNICAL

REPORT OF CORE BORINGS

Scale 1" = 16' | Drawing GE-054 | Sheet

5/4/2006 1:47:01 AM c:\HP\BORING_PROFILE\Rgeonc11.dgn

BORING No.: B-133
LOCATION: 458+62.685 (8.122' LT)
ELEVATION: 7.81
HAMMER: SAFETY
TYPE OF RIG: B-53
DATE: 06/29/05

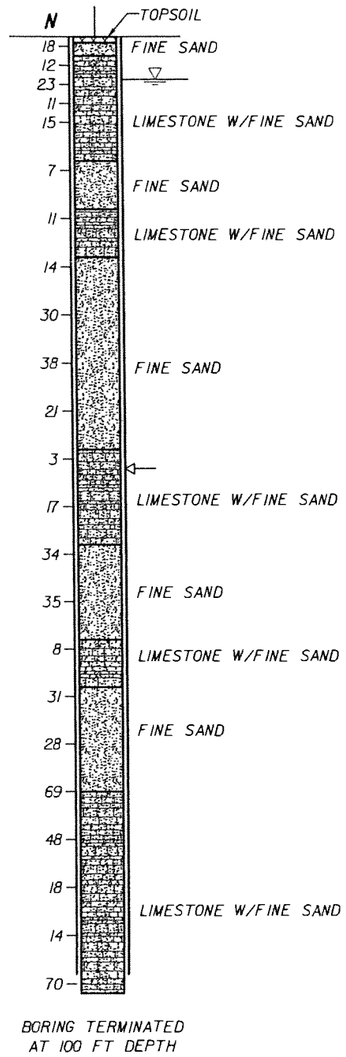

BORING No.: B-134
LOCATION: 460+52.623 (7.751' RT)
ELEVATION: 8.17
HAMMER: SAFETY
TYPE OF RIG: B-53
DATE: 08/04/05

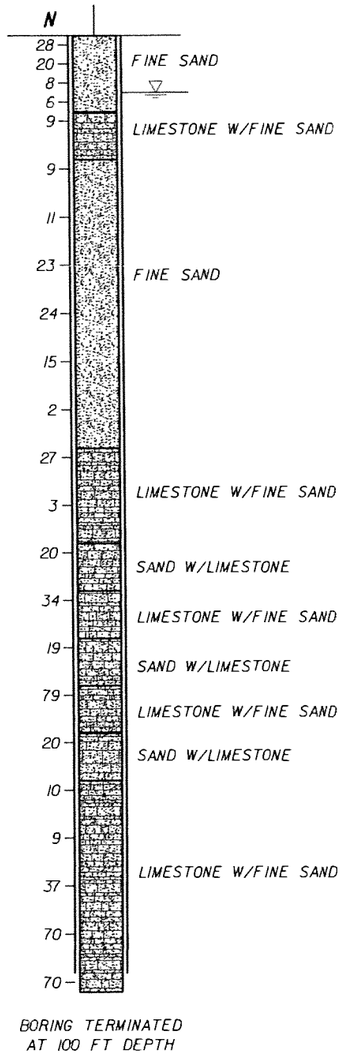

BORING No.: B-135
LOCATION: 461+52.063 (13.989' RT)
ELEVATION: 8.77
HAMMER: SAFETY
TYPE OF RIG: B-53
DATE: 08/03/05

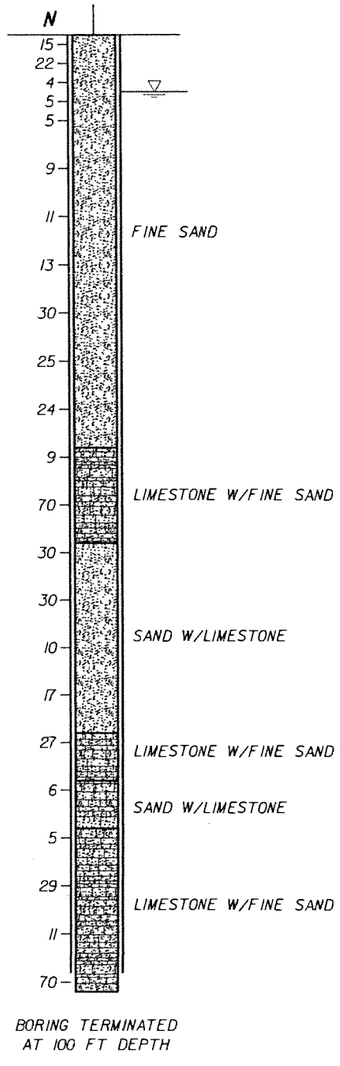

BORING No.: B-136
LOCATION: 463+18.121 (0.126' RT)
ELEVATION: 8.16
HAMMER: SAFETY
TYPE OF RIG: B-53
DATE: 07/03/05

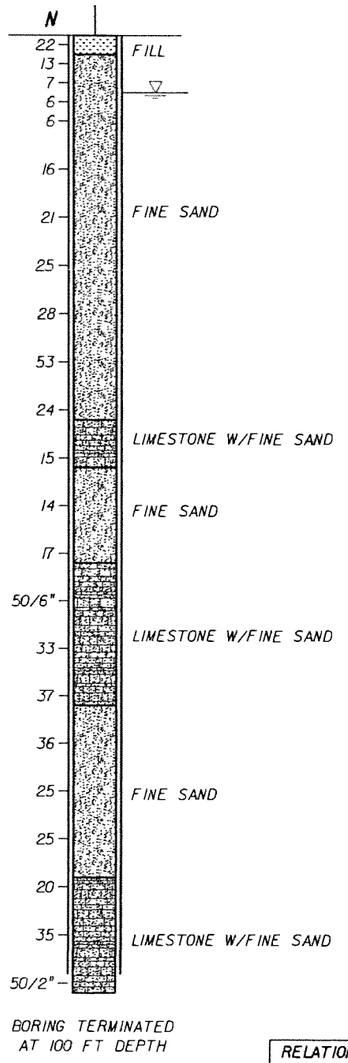

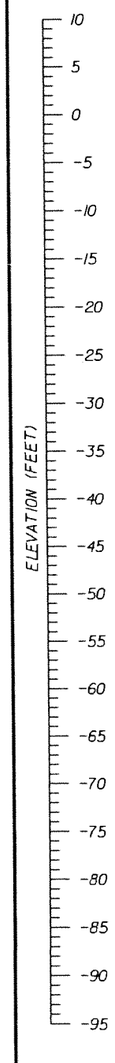

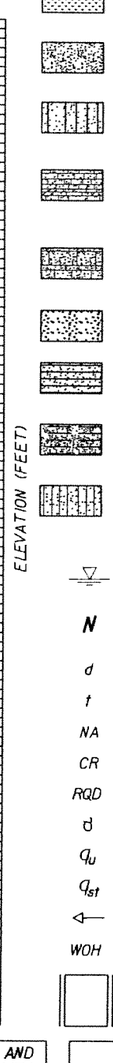

LEGEND:

- ASPHALT PAVEMENT
- (TOPSOIL) BLACK/DARK BROWN/DARK GRAY TO GRAY, SILTY SAND WITH ROOTS, ORGANICS, AND OTHER MATERIALS
- (FILL) LIMEROCK FRAGMENTS, COARSE GRAVEL TO SILT SIZE, IN SHADES OF BROWN OR GRAY, OCCASIONALLY MIXED WITH TOP SOIL
- (FINE SAND) VERY LOOSE TO VERY DENSE, FINE-SAND-SIZE MATERIAL IN SHADES OF BROWN, GRAY, OR OTHERS COLORS, OCCASIONALLY ORGANIC STAINED
- (SILTY SAND) SILTY SAND-SIZE MATERIAL IN SHADES OF BROWN/GRAY/OTHER COLORS POSSIBLY DISINTEGRATED SEDIMETARY ROCK
- (LIMESTONE WITH FINE SAND) VUGGY, SEDIMENTARY ROCK MADE OF $CaCO_3$, WITH SAND-SIZE MATERIAL, IN SHADES OF BROWN/GRAY/OTHER COLORS, OCCASIONALLY WITH SANDSTONE AND SHELL FRAGMENTS
- (SAND WITH LIMESTONE) SAND-SIZE MATERIAL WITH LIMESTONE FRAGMENTS IN SHADES OF BROWN, GRAY, OR OTHER COLORS, SOMETIMES WITH SANDSTONE FRAGMENTS
- (ORGANICS) DARK GRAY TO BLACK, SILT TO FINE-SAND-SIZE MATERIAL HAVING ORGANIC CONTENT > 5%
- (SANDSTONE WITH SAND) SEDIMENTARY ROCK MADE OF SAND-SIZE MATERIAL IN $CaCO_3$ MATRIX, IN SHADES OF BROWN OR GRAY, WITH FINE-SAND-SIZE MATERIAL
- (SAND WITH SANDSTONE) SAND-SIZE MATERIAL WITH SANDSTONE FRAGMENTS IN SHADES OF BROWN/GRAY/OTHER COLORS
- (SANDY SILT) SANDY, SILT-SIZE MATERIAL IN SHADES OF BLACK/BROWN/GRAY, POSSIBLY DISINTEGRATED SEDIMETARY ROCK

NOTES:

- WATER TABLE AT THE TIME OF DRILLING
- N — NUMBERS TO THE LEFT OF BORINGS INDICATE SPT VALUE FOR 1 FOOT (12") PENETRATION (UNLESS OTHERWISE NOTED)
- d — DIAMETER
- t — TIME
- NA — NOT AVAILABLE
- CR — CORE RECOVERY
- RQD — ROCK QUALITY DESIGNATION
- γ_d — UNIT WEIGHT lb/cft
- q_u — UNCONFINED COMPRESSION AT SAMPLE DEPTH (tsf)
- q_{st} — SPLIT TENSILE STRENGTH AT SAMPLE DEPTH (tsf)
- ⟵ — LOSS OF CIRCULATION
- WOH — WEIGHT OT THE HAMMER
- CASING USED

NOTES:

1. THE LIMESTONE MAY BE HARD TO EXCAVATE AND DEWATER; SPECIAL EQUIPMENT AND TOOLS MAY BE REQUIRED.
2. BORING LOCATIONS (STATIONS AND OFFSETS) BASED ON 70% PRELIMINARY ENGINEERING ALIGNMENT. SEE BORING LOCATION PLANS FOR SPECIFIC COORDINATE DATA.

VERTICAL SCALE: 1"=16'

ENVIRONMENTAL CLASSIFICATION

SEE THE GEOTECHNICAL REPORT

RELATION OF RQD AND IN-SITU ROCK QUALITY

RQD (%)	ROCK QUALITY
90-100	EXCELLENT
75-90	GOOD
50-75	FAIR
25-50	POOR
0-25	VERY POOR

GRANULAR MATERIALS

RELATIVE DENSITY	SAFETY HAMMER SPT N-VALUE (BLOW/FOOT)	AUTOMATIC HAMMER SPT N-VALUE (BLOW/FOOT)
VERY LOOSE	LESS THAN 4	LESS THAN 3
LOOSE	4 - 10	3 - 7
MEDIUM DENSE	10 - 30	7 - 21
DENSE	30 - 50	21 - 35
VERY DENSE	GREATER THAN 50	GREATER THAN 35

SK Designed by	05-06 Date
SK/EP Drawn by	05-06 Date
AK Checked by	05-06 Date
Approved by	Date

No.	Date	By / Chk	App.	Revisions

NORTH CORRIDOR METRORAIL EXTENSION - PRELIMINARY ENGINEERING (100% SUBMITTAL)

MIAMI-DADE COUNTY — MIAMI-DADE TRANSIT

PARSONS
7600 CORPORATE CENTER DRIVE, SUITE 500
MIAMI, FLORIDA 33126
PHONE: (786) 464-1000 FAX: (786) 845-7119
CERTIFICATE OF AUTHORIZATION NO. 1838

Approved | Date

HP CONSULTANTS INC.
License No. 9509
ARVIND KUMBHOJKAR, PH.D, P.E.
License No. 41067
10220 SW 107 Street
Miami, FL 33176 Ph:(305)596-1585

Approved | Date

GEOTECHNICAL

REPORT OF CORE BORINGS

Scale: 1" = 16' | Drawing: GE-055 | Sheet

5/4/2006 1:47:35 AM c:\HP\BORING_PROFILE\Rgeocnc12.dgn

BORING No.: B-137
LOCATION: 466+68.069 (31.071' LT)
ELEVATION: 6.79
HAMMER: SAFETY
TYPE OF RIG: B-53
DATE: 07/03/05

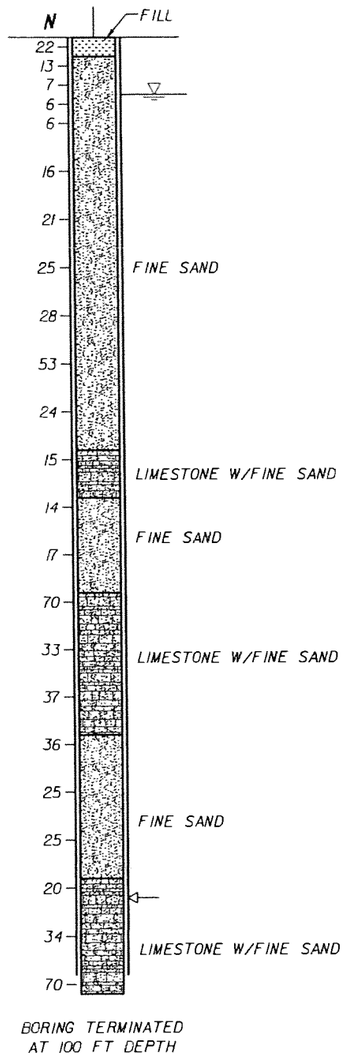

BORING TERMINATED AT 100 FT DEPTH

BORING No.: B-138
LOCATION: 469+84.303 (103.555' RT)
ELEVATION: 8.19
HAMMER: SAFETY
TYPE OF RIG: B-53
DATE: 09/02/05

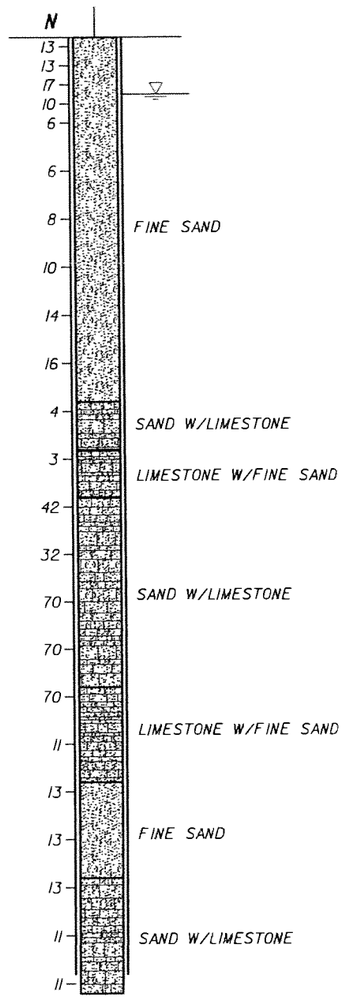

BORING TERMINATED AT 100 FT DEPTH

BORING No.: B-139
LOCATION: 472+68.509 (23.677' LT)
ELEVATION: 9.55
HAMMER: SAFETY
TYPE OF RIG: B-53
DATE: 09/01/05

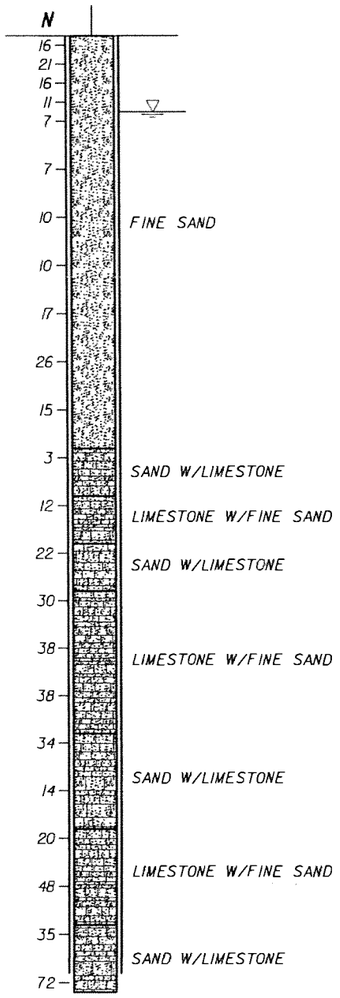

BORING TERMINATED AT 100 FT DEPTH

VERTICAL SCALE: 1"=16'

BORING No.: B-140
LOCATION: 474+58.957 (27.413' RT)
ELEVATION: 8.56
HAMMER: SAFETY
TYPE OF RIG: B-53
DATE: 08/30/05

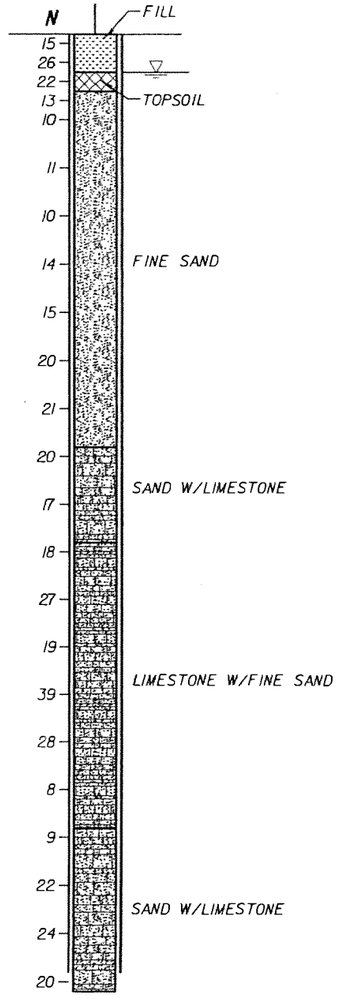

BORING TERMINATED AT 100 FT DEPTH

LEGEND:

- ASPHALT PAVEMENT
- (TOPSOIL) BLACK/DARK BROWN/DARK GRAY TO GRAY, SILTY SAND WITH ROOTS, ORGANICS, AND OTHER MATERIALS
- (FILL) LIMEROCK FRAGMENTS, COARSE GRAVEL TO SILT SIZE, IN SHADES OF BROWN OR GRAY, OCCASIONALLY MIXED WITH TOP SOIL
- (FINE SAND) VERY LOOSE TO VERY DENSE, FINE-SAND-SIZE MATERIAL IN SHADES OF BROWN, GRAY, OR OTHERS COLORS, OCCASIONALLY ORGANIC STAINED
- (SILTY SAND) SILTY SAND-SIZE MATERIAL IN SHADES OF BROWN/GRAY/OTHER COLORS POSSIBLY DISINTEGRATED SEDIMETARY ROCK
- (LIMESTONE WITH FINE SAND) VUGGY, SEDIMENTARY ROCK MADE OF $CoCO_3$, WITH SAND-SIZE MATERIAL, IN SHADES OF BROWN/GRAY/OTHER COLORS, OCCASIONALLY WITH SANDSTONE AND SHELL FRAGMENTS
- (SAND WITH LIMESTONE) SAND-SIZE MATERIAL WITH LIMESTONE FRAGMENTS IN SHADES OF BROWN, GRAY, OR OTHER COLORS, SOMETIMES WITH SANDSTONE FRAGMENTS
- (ORGANICS) DARK GRAY TO BLACK, SILT TO FINE-SAND-SIZE MATERIAL HAVING ORGANIC CONTENT> 5%
- (SANDSTONE WITH SAND) SEDIMENTARY ROCK MADE OF SAND-SIZE MATERIAL IN $CoCO_3$ MATRIX, IN SHADES OF BROWN OR GRAY, WITH FINE-SAND-SIZE MATERIAL
- (SAND WITH SANDSTONE) SAND-SIZE MATERIAL WITH SANDSTONE FRAGMENTS IN SHADES OF BROWN/GRAY/ OTHER COLORS
- (SANDY SILT) SANDY, SILT-SIZE MATERIAL IN SHADES OF BLACK/BROWN/GRAY, POSSIBLY DISINTEGRATED SEDIMETARY ROCK

NOTES:

- WATER TABLE AT THE TIME OF DRILLING
- N — NUMBERS TO THE LEFT OF BORINGS INDICATE SPT VALUE FOR 1 FOOT (12") PENETRATION (UNLESS OTHERWISE NOTED)
- d — DIAMETER
- t — TIME
- NA — NOT AVAILABLE
- CR — CORE RECOVERY
- RQD — ROCK QUALITY DESIGNATION
- γ — UNIT WEIGHT lb/cft
- q_u — UNCONFINED COMPRESSION AT SAMPLE DEPTH (tsf)
- q_{st} — SPLIT TENSILE STRENGTH AT SAMPLE DEPTH (tsf)
- ◁— LOSS OF CIRCULATION
- WOH — WEIGHT OT THE HAMMER
- CASING USED

GRANULAR MATERIALS

RELATIVE DENSITY	SAFETY HAMMER SPT N-VALUE (BLOW/FOOT)	AUTOMATIC HAMMER SPT N-VALUE (BLOW/FOOT)
VERY LOOSE	LESS THAN 4	LESS THAN 3
LOOSE	4 - 10	3 - 7
MEDIUM DENSE	10 - 30	7 - 21
DENSE	30 - 50	21 - 35
VERY DENSE	GREATER THAN 50	GREATER THAN 35

RELATION OF RQD AND IN-SITU ROCK QUALITY	
RQD (%)	ROCK QUALITY
90-100	EXCELLENT
75-90	GOOD
50-75	FAIR
25-50	POOR
0-25	VERY POOR

ENVIRONMENTAL CLASSIFICATION

SEE THE GEOTECHNICAL REPORT

NOTES:

1. THE LIMESTONE MAY BE HARD TO EXCAVATE AND DEWATER; SPECIAL EQUIPMENT AND TOOLS MAY BE REQUIRED.
2. BORING LOCATIONS (STATIONS AND OFFSETS) BASED ON 70% PRELIMINARY ENGINEERING ALIGNMENT. SEE BORING LOCATION PLANS FOR SPECIFIC COORDINATE DATA.

SK	05-06					
Designed by	Date					
SK/EP	05-06					
Drawn by	Date					
AK	05-06					
Checked by	Date					
Approved by	Date	No.	Date	By / Chk	App.	Revisions

NORTH CORRIDOR METRORAIL EXTENSION - PRELIMINARY ENGINEERING (100% SUBMITTAL)

MIAMI-DADE COUNTY — MIAMI-DADE TRANSIT

PARSONS
7600 CORPORATE CENTER DRIVE, SUITE 500
MIAMI, FLORIDA 33126
PHONE: (786) 464-1000 FAX: (786) 845-7119
CERTIFICATE OF AUTHORIZATION NO. 1838
Approved | Date

HP CONSULTANTS INC.
License No. 9509
ARVIND KUMBHOJKAR, PH.D. P.E.
License No. 41067
10220 SW 107 Street
Miami, Fl 33176 Ph:(305)596-1585
Approved | Date

GEOTECHNICAL

REPORT OF CORE BORINGS

Scale: 1" = 16' | Drawing: GE-056 | Sheet: 5 of 5

5/4/2006 1:47:54 AM c:\HP\BORING_PROFILE\Rgeonc12.dgn

BORING No.: B-141
LOCATION: 477+86.965 (18.481' LT)
ELEVATION: 8.54
HAMMER: SAFETY
TYPE OF RIG: B-53
DATE: 06/21/05

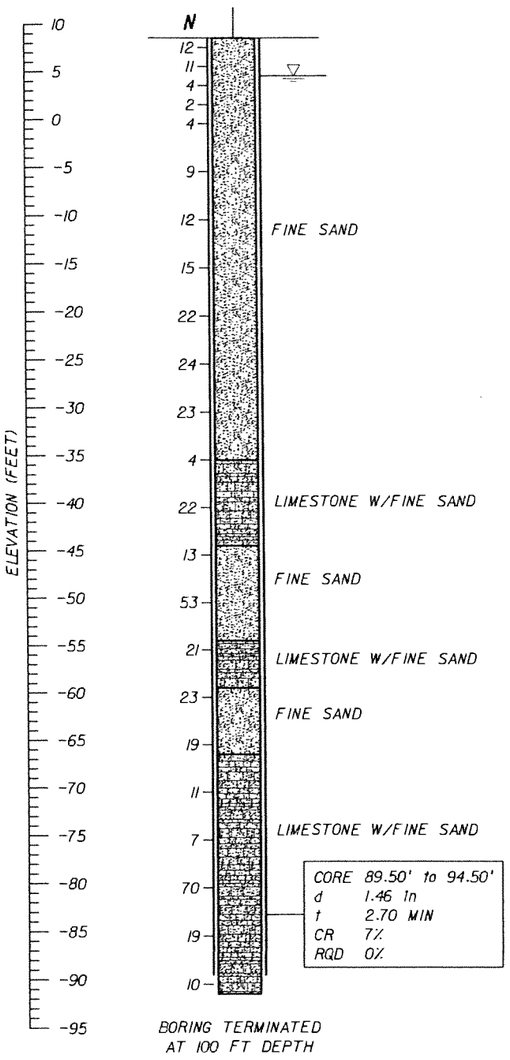

BORING TERMINATED AT 100 FT DEPTH

BORING No.: B-142
LOCATION: 481+91.707 (11.790' LT)
ELEVATION: 8.75
HAMMER: SAFETY
TYPE OF RIG: B-53
DATE: 07/07/05

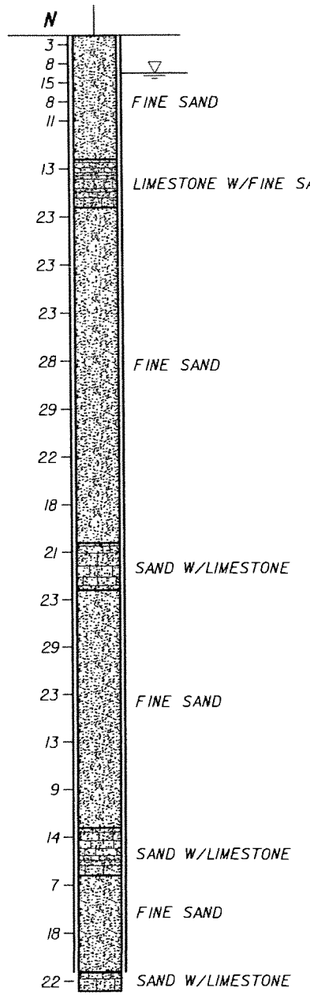

BORING TERMINATED AT 100 FT DEPTH

BORING No.: B-143
LOCATION: 484+47.096 (9.218' RT)
ELEVATION: 7.44
HAMMER: SAFETY
TYPE OF RIG: B-53
DATE: 07/05/05

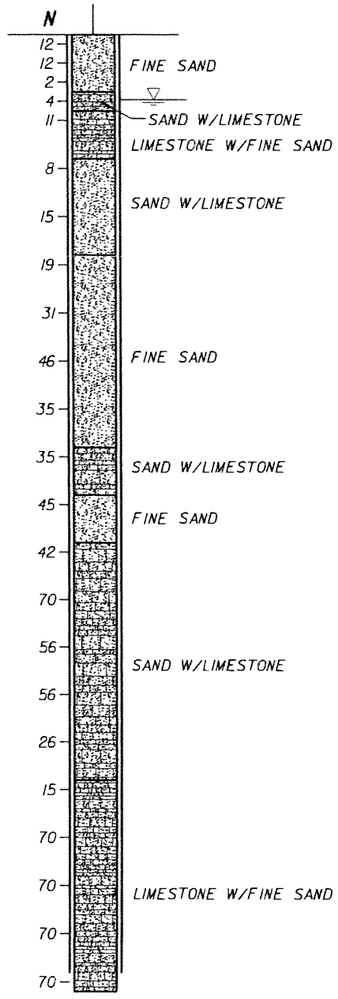

BORING TERMINATED AT 100 FT DEPTH

BORING No.: B-144
LOCATION: 488+10.308 (20.026' RT)
ELEVATION: 6.96
HAMMER: SAFETY
TYPE OF RIG: B-53
DATE: 07/01/05

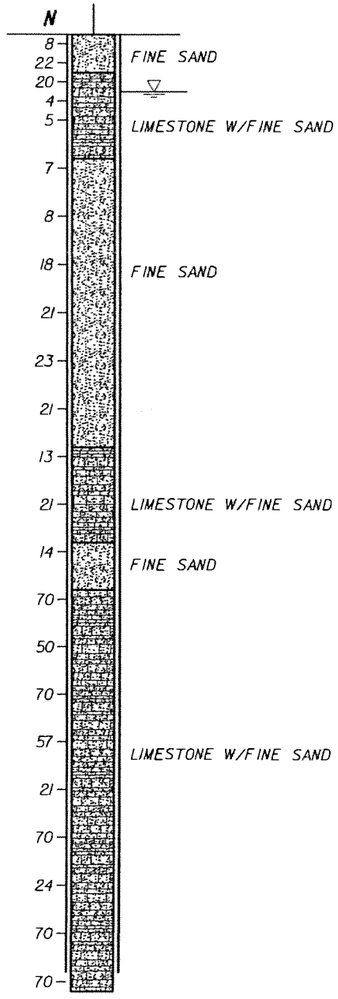

BORING TERMINATED AT 100 FT DEPTH

VERTICAL SCALE: 1"=16'

LEGEND:

- ASPHALT PAVEMENT
- (TOPSOIL) BLACK/DARK BROWN/DARK GRAY TO GRAY, SILTY SAND WITH ROOTS, ORGANICS, AND OTHER MATERIALS
- (FILL) LIMEROCK FRAGMENTS, COARSE GRAVEL TO SILT SIZE, IN SHADES OF BROWN OR GRAY, OCCASIONALLY MIXED WITH TOP SOIL
- (FINE SAND) VERY LOOSE TO VERY DENSE, FINE-SAND-SIZE MATERIAL IN SHADES OF BROWN, GRAY, OR OTHERS COLORS, OCCASIONALLY ORGANIC STAINED
- (SILTY SAND) SILTY SAND-SIZE MATERIAL IN SHADES OF BROWN/GRAY/OTHER COLORS POSSIBLY DISINTEGRATED SEDIMETARY ROCK
- (LIMESTONE WITH FINE SAND) VUGGY, SEDIMENTARY ROCK MADE OF $CaCO_3$, WITH SAND-SIZE MATERIAL, IN SHADES OF BROWN/GRAY/OTHER COLORS, OCCASIONALLY WITH SANDSTONE AND SHELL FRAGMENTS
- (SAND WITH LIMESTONE) SAND-SIZE MATERIAL WITH LIMESTONE FRAGMENTS IN SHADES OF BROWN, GRAY, OR OTHER COLORS, SOMETIMES WITH SANDSTONE FRAGMENTS
- (ORGANICS) DARK GRAY TO BLACK, SILT TO FINE-SAND-SIZE MATERIAL HAVING ORGANIC CONTENT> 5%
- (SANDSTONE WITH SAND) SEDIMENTARY ROCK MADE OF SAND-SIZE MATERIAL IN $CaCO_3$ MATRIX, IN SHADES OF BROWN OR GRAY, WITH FINE-SAND-SIZE MATERIAL
- (SAND WITH SANDSTONE) SAND-SIZE MATERIAL WITH SANDSTONE FRAGMENTS IN SHADES OF BROWN/GRAY/ OTHER COLORS
- (SANDY SILT) SANDY, SILT-SIZE MATERIAL IN SHADES OF BLACK/BROWN/GRAY, POSSIBLY DISINTEGRATED SEDIMETARY ROCK

NOTES:

- WATER TABLE AT THE TIME OF DRILLING
- N — NUMBERS TO THE LEFT OF BORINGS INDICATE SPT VALUE FOR 1 FOOT (12") PENETRATION (UNLESS OTHERWISE NOTED)
- d — DIAMETER
- t — TIME
- NA — NOT AVAILABLE
- CR — CORE RECOVERY
- RQD — ROCK QUALITY DESIGNATION
- γ_d — UNIT WEIGHT lb/cft
- q_u — UNCONFINED COMPRESSION AT SAMPLE DEPTH (tsf)
- q_{st} — SPLIT TENSILE STRENGTH AT SAMPLE DEPTH (tsf)
- ⇦ — LOSS OF CIRCULATION
- WOH — WEIGHT OT THE HAMMER
- CASING USED

NOTES:

1. THE LIMESTONE MAY BE HARD TO EXCAVATE AND DEWATER; SPECIAL EQUIPMENT AND TOOLS MAY BE REQUIRED.
2. BORING LOCATIONS (STATIONS AND OFFSETS) BASED ON 70% PRELIMINARY ENGINEERING ALIGNMENT. SEE BORING LOCATION PLANS FOR SPECIFIC COORDINATE DATA.

ENVIRONMENTAL CLASSIFICATION

SEE THE GEOTECHNICAL REPORT

RELATION OF RQD AND IN-SITU ROCK QUALITY

RQD (%)	ROCK QUALITY
90-100	EXCELLENT
75-90	GOOD
50-75	FAIR
25-50	POOR
0-25	VERY POOR

GRANULAR MATERIALS

RELATIVE DENSITY	SAFETY HAMMER SPT N-VALUE (BLOW/FOOT)	AUTOMATIC HAMMER SPT N-VALUE (BLOW/FOOT)
VERY LOOSE	LESS THAN 4	LESS THAN 3
LOOSE	4 - 10	3 - 7
MEDIUM DENSE	10 - 30	7 - 21
DENSE	30 - 50	21 - 35
VERY DENSE	GREATER THAN 50	GREATER THAN 35

SK 05-06 Designed by Date	
SK/EP 05-06 Drawn by Date	
AK 05-06 Checked by Date	
Approved by Date	

No.	Date	By / Chk	App.	Revisions

NORTH CORRIDOR METRORAIL EXTENSION - PRELIMINARY ENGINEERING (100% SUBMITTAL)

MIAMI-DADE COUNTY — MIAMI-DADE TRANSIT

PARSONS
7600 CORPORATE CENTER DRIVE, SUITE 500
MIAMI, FLORIDA 33126
PHONE: (786) 464-1000 FAX: (786) 845-7119
CERTIFICATE OF AUTHORIZATION NO. 1838

Approved | Date

HP CONSULTANTS INC.
License No. 9509
ARVIND KUMBHOJKAR, PH.D, P.E.
License No. 41067
10220 SW 107 Street
Miami, Fl 33176 Ph:(305)596-1585

Approved | Date

GEOTECHNICAL

REPORT OF CORE BORINGS

Scale 1" = 16' | Drawing GE-057 | Sheet

5/4/2006 1:48:12 AM c:\HP\BORING_PROFILE\Rgeonc12.dgn

BORING No.: B-145
LOCATION: 497+89.979 (1.403' LT)
ELEVATION: 7.98
HAMMER: SAFETY
TYPE OF RIG: B-53
DATE: 06/29/05

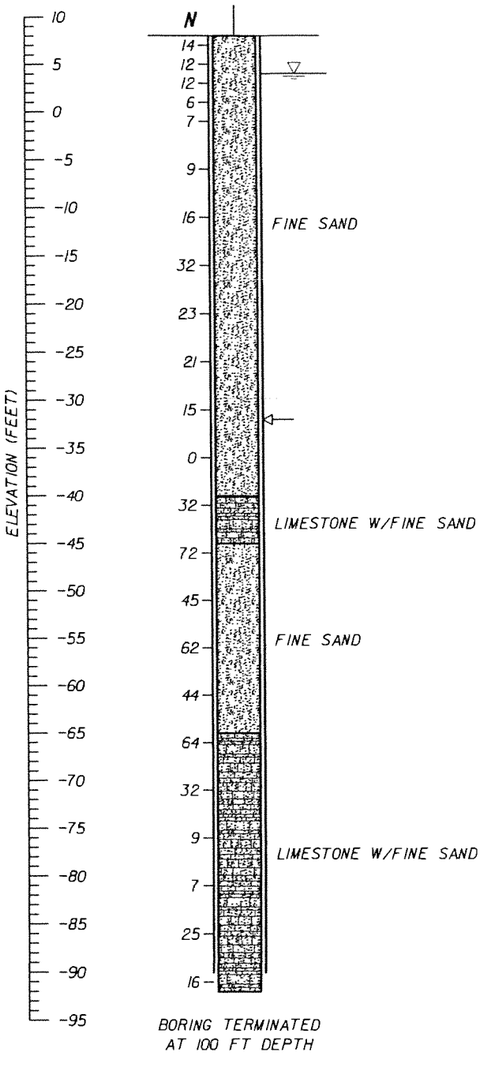

BORING TERMINATED AT 100 FT DEPTH

BORING No.: B-146
LOCATION: 499+00.020 (2.754' LT)
ELEVATION: 7.62
HAMMER: SAFETY
TYPE OF RIG: B-53
DATE: 06/28/05

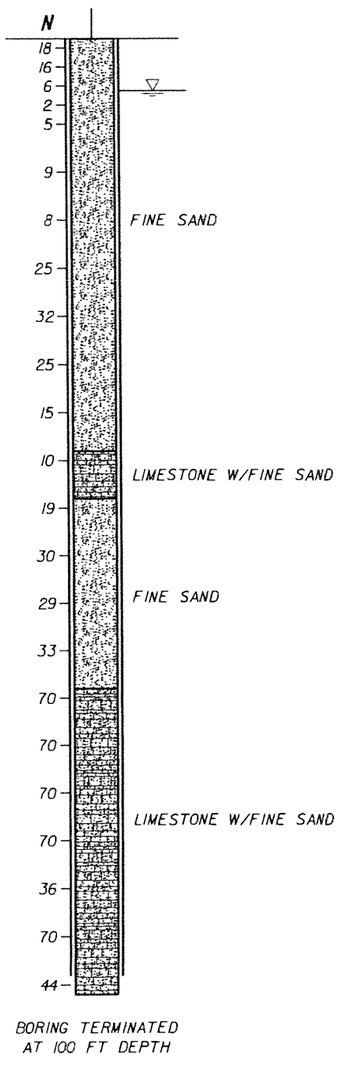

BORING TERMINATED AT 100 FT DEPTH

BORING No.: B-147
LOCATION: 501+18.825 (7.042' LT)
ELEVATION: 7.03
HAMMER: SAFETY
TYPE OF RIG: B-53
DATE: 06/27/05

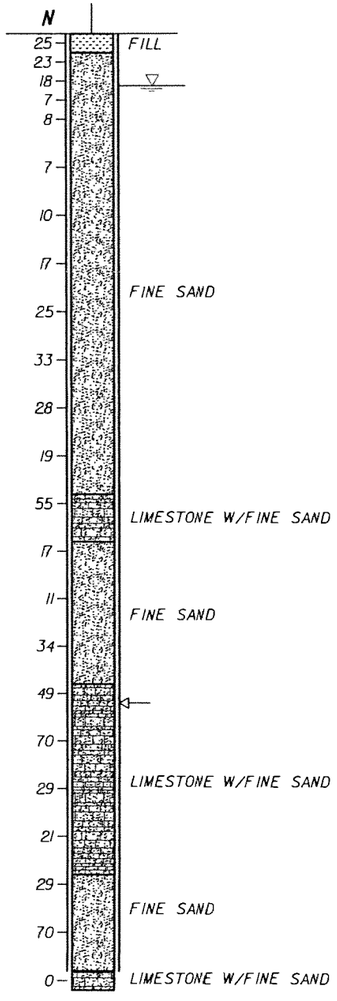

BORING TERMINATED AT 100 FT DEPTH

VERTICAL SCALE: 1"=16'

BORING No.: B-148
LOCATION: 503+90.457 (12.130' LT)
ELEVATION: 6.83
HAMMER: SAFETY
TYPE OF RIG: B-53
DATE: 06/26/05

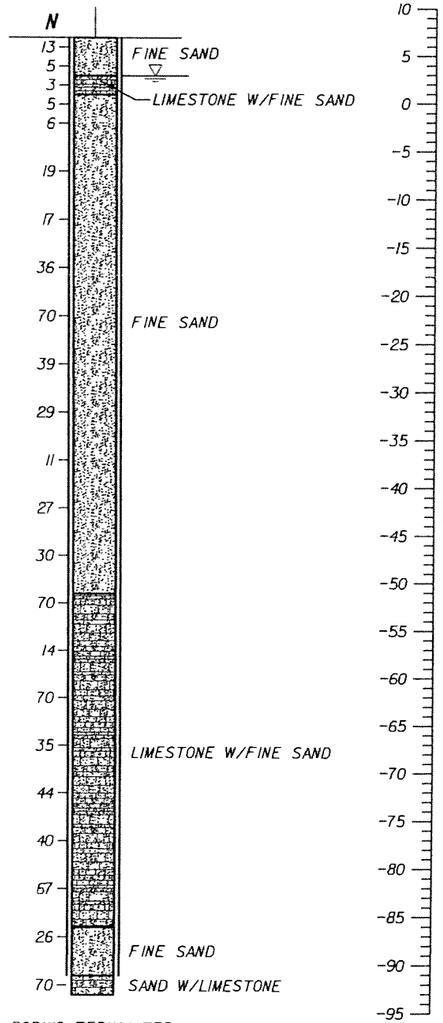

BORING TERMINATED AT 100 FT DEPTH

ENVIRONMENTAL CLASSIFICATION

SEE THE GEOTECHNICAL REPORT

LEGEND:

- ASPHALT PAVEMENT
- (TOPSOIL) BLACK/DARK BROWN/DARK GRAY TO GRAY, SILTY SAND WITH ROOTS, ORGANICS, AND OTHER MATERIALS
- (FILL) LIMEROCK FRAGMENTS, COARSE GRAVEL TO SILT SIZE, IN SHADES OF BROWN OR GRAY, OCCASIONALLY MIXED WITH TOP SOIL
- (FINE SAND) VERY LOOSE TO VERY DENSE, FINE-SAND-SIZE MATERIAL IN SHADES OF BROWN, GRAY, OR OTHERS COLORS, OCCASIONALLY ORGANIC STAINED
- (SILTY SAND) SILTY SAND-SIZE MATERIAL IN SHADES OF BROWN/GRAY/OTHER COLORS POSSIBLY DISINTEGRATED SEDIMETARY ROCK
- (LIMESTONE WITH FINE SAND) VUGGY, SEDIMENTARY ROCK MADE OF $CaCO_3$, WITH SAND-SIZE MATERIAL, IN SHADES OF BROWN/GRAY/OTHER COLORS, OCCASIONALLY WITH SANDSTONE AND SHELL FRAGMENTS
- (SAND WITH LIMESTONE) SAND-SIZE MATERIAL WITH LIMESTONE FRAGMENTS IN SHADES OF BROWN, GRAY, OR OTHER COLORS, SOMETIMES WITH SANDSTONE FRAGMENTS
- (ORGANICS) DARK GRAY TO BLACK, SILT TO FINE-SAND-SIZE MATERIAL HAVING ORGANIC CONTENT> 5%
- (SANDSTONE WITH SAND) SEDIMENTARY ROCK MADE OF SAND-SIZE MATERIAL IN $CaCO_3$ MATRIX, IN SHADES OF BROWN OR GRAY, WITH FINE-SAND-SIZE MATERIAL
- (SAND WITH SANDSTONE) SAND-SIZE MATERIAL WITH SANDSTONE FRAGMENTS IN SHADES OF BROWN/GRAY/ OTHER COLORS
- (SANDY SILT) SANDY, SILT-SIZE MATERIAL IN SHADES OF BLACK/BROWN/GRAY, POSSIBLY DISINTEGRATED SEDIMETARY ROCK

NOTES:

- WATER TABLE AT THE TIME OF DRILLING
- **N** NUMBERS TO THE LEFT OF BORINGS INDICATE SPT VALUE FOR 1 FOOT (12") PENETRATION (UNLESS OTHERWISE NOTED)
- d DIAMETER
- t TIME
- NA NOT AVAILABLE
- CR CORE RECOVERY
- RQD ROCK QUALITY DESIGNATION
- γ_d UNIT WEIGHT lb/cft
- q_u UNCONFINED COMPRESSION AT SAMPLE DEPTH (tsf)
- q_{st} SPLIT TENSILE STRENGTH AT SAMPLE DEPTH (tsf)
- ⟵ LOSS OF CIRCULATION
- WOH WEIGHT OT THE HAMMER
- CASING USED

NOTES:

1. THE LIMESTONE MAY BE HARD TO EXCAVATE AND DEWATER; SPECIAL EQUIPMENT AND TOOLS MAY BE REQUIRED.
2. BORING LOCATIONS (STATIONS AND OFFSETS) BASED ON 70% PRELIMINARY ENGINEERING ALIGNMENT. SEE BORING LOCATION PLANS FOR SPECIFIC COORDINATE DATA.

RELATION OF RQD AND IN-SITU ROCK QUALITY

RQD (%)	ROCK QUALITY
90-100	EXCELLENT
75-90	GOOD
50-75	FAIR
25-50	POOR
0-25	VERY POOR

GRANULAR MATERIALS

RELATIVE DENSITY	SAFETY HAMMER SPT N-VALUE (BLOW/FOOT)	AUTOMATIC HAMMER SPT N-VALUE (BLOW/FOOT)
VERY LOOSE	LESS THAN 4	LESS THAN 3
LOOSE	4 - 10	3 - 7
MEDIUM DENSE	10 - 30	7 - 21
DENSE	30 - 50	21 - 35
VERY DENSE	GREATER THAN 50	GREATER THAN 35

SK	05-06					
Designed by	Date					
SK/EP	05-06					
Drawn by	Date					
AK	05-06					
Checked by	Date					
Approved by	Date	No.	Date	By / Chk	App.	Revisions

NORTH CORRIDOR METRORAIL EXTENSION - PRELIMINARY ENGINEERING (100% SUBMITTAL)

MIAMI-DADE COUNTY — MIAMI-DADE TRANSIT

PARSONS
7500 CORPORATE CENTER DRIVE, SUITE 500
MIAMI, FLORIDA 33126
PHONE: (786) 464-1000 FAX: (786) 845-7119
CERTIFICATE OF AUTHORIZATION NO. 1838
Approved | Date

HP CONSULTANTS INC.
License No. 9509
ARVIND KUMBHOJKAR, PH.D, P.E.
License No. 41067
10220 SW 107 Street
Miami, Fl 33176 Ph:(305)596-1585
Approved | Date

GEOTECHNICAL

REPORT OF CORE BORINGS

Scale 1" = 16' | Drawing GE-058 | Sheet 450

5/4/2006 1:49:14 AM c:\HP\BORING_PROFILE\Rgeonc13.dgn

BORING No.: B-149
LOCATION: 505+07.155 (17.635' LT)
ELEVATION: 6.76
HAMMER: SAFETY
TYPE OF RIG: B-53
DATE: 06/25/05

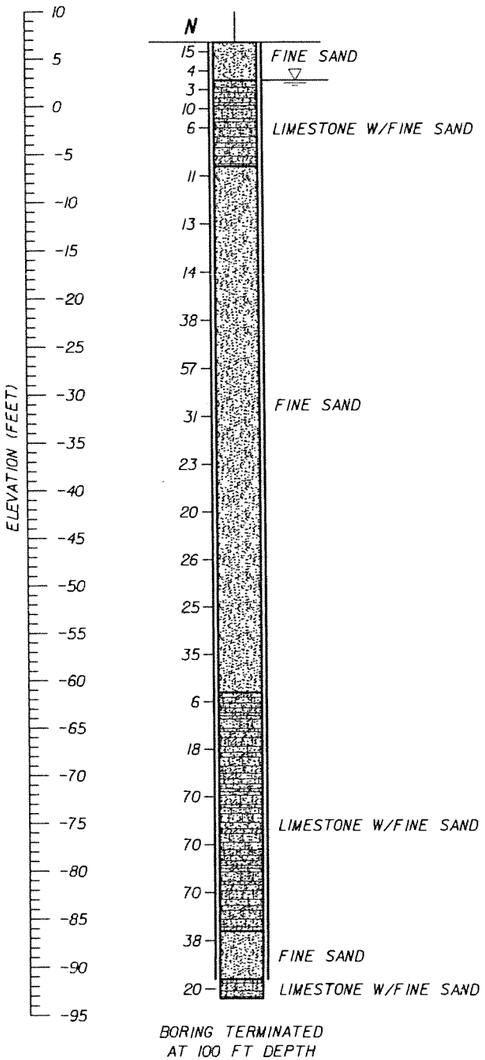

BORING TERMINATED AT 100 FT DEPTH

BORING No.: B-150
LOCATION: 506+59.996 (19.923' LT)
ELEVATION: 6.82
HAMMER: SAFETY
TYPE OF RIG: B-53
DATE: 06/24/05

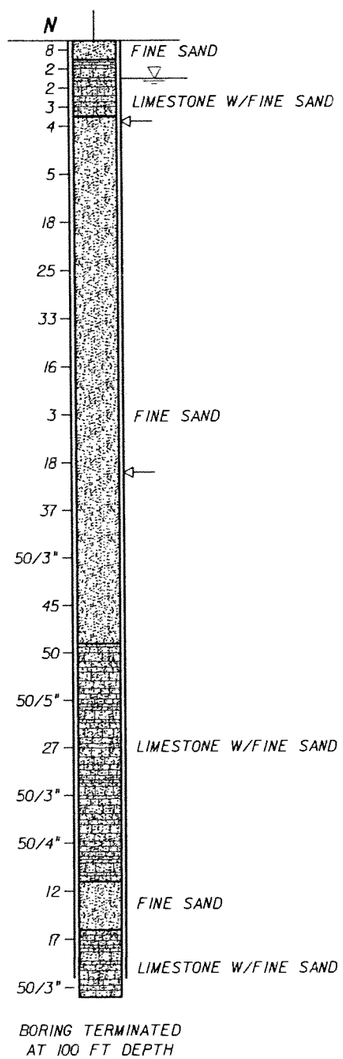

BORING TERMINATED AT 100 FT DEPTH

BORING No.: B-151
LOCATION: 507+56.425 (24.673' LT)
ELEVATION: 6.74
HAMMER: SAFETY
TYPE OF RIG: B-53
DATE: 0/24/05

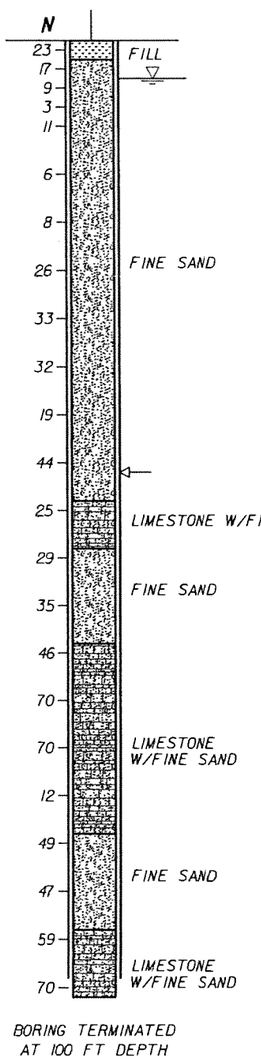

BORING TERMINATED AT 100 FT DEPTH

BORING No.: B-152
LOCATION: 509+47.970 (25.804' LT)
ELEVATION: 6.48
HAMMER: SAFETY
TYPE OF RIG: B-53
DATE: 06/24/05

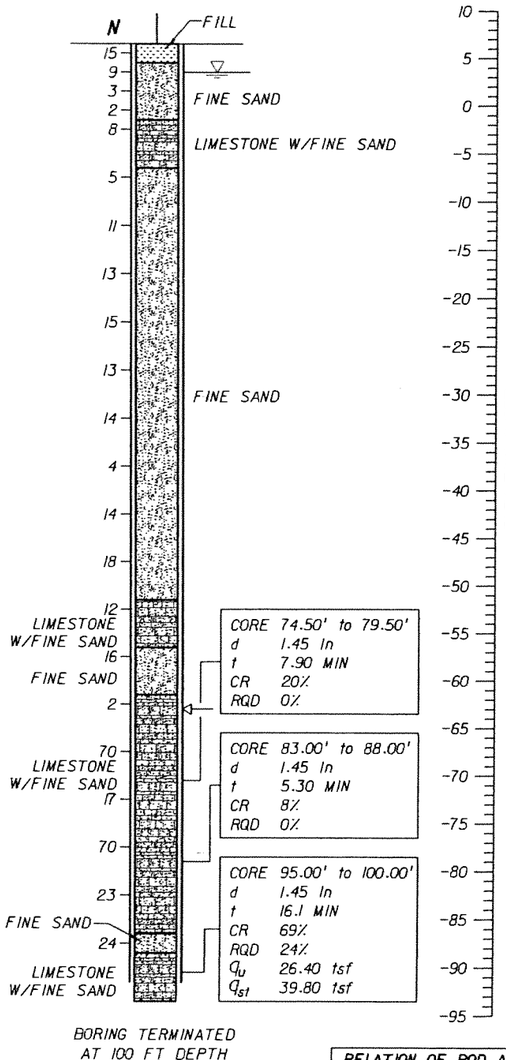

BORING TERMINATED AT 100 FT DEPTH

VERTICAL SCALE: 1"=16'

LEGEND:

- ASPHALT PAVEMENT
- (TOPSOIL) BLACK/DARK BROWN/DARK GRAY TO GRAY, SILTY SAND WITH ROOTS, ORGANICS, AND OTHER MATERIALS
- (FILL) LIMEROCK FRAGMENTS, COARSE GRAVEL TO SILT SIZE, IN SHADES OF BROWN OR GRAY, OCCASIONALLY MIXED WITH TOP SOIL
- (FINE SAND) VERY LOOSE TO VERY DENSE, FINE-SAND-SIZE MATERIAL IN SHADES OF BROWN, GRAY, OR OTHERS COLORS, OCCASIONALLY ORGANIC STAINED
- (SILTY SAND) SILTY SAND-SIZE MATERIAL IN SHADES OF BROWN/GRAY/OTHER COLORS POSSIBLY DISINTEGRATED SEDIMETARY ROCK
- (LIMESTONE WITH FINE SAND) VUGGY, SEDIMENTARY ROCK MADE OF $CaCO_3$, WITH SAND-SIZE MATERIAL, IN SHADES OF BROWN/GRAY/OTHER COLORS, OCCASIONALLY WITH SANDSTONE AND SHELL FRAGMENTS
- (SAND WITH LIMESTONE) SAND-SIZE MATERIAL WITH LIMESTONE FRAGMENTS IN SHADES OF BROWN, GRAY, OR OTHER COLORS, SOMETIMES WITH SANDSTONE FRAGMENTS
- (ORGANICS) DARK GRAY TO BLACK, SILT TO FINE-SAND-SIZE MATERIAL HAVING ORGANIC CONTENT> 5%
- (SANDSTONE WITH SAND) SEDIMENTARY ROCK MADE OF SAND-SIZE MATERIAL IN $CaCO_3$ MATRIX, IN SHADES OF BROWN OR GRAY, WITH FINE-SAND-SIZE MATERIAL
- (SAND WITH SANDSTONE) SAND-SIZE MATERIAL WITH SANDSTONE FRAGMENTS IN SHADES OF BROWN/GRAY/OTHER COLORS
- (SANDY SILT) SANDY, SILT-SIZE MATERIAL IN SHADES OF BLACK/BROWN/GRAY, POSSIBLY DISINTEGRATED SEDIMETARY ROCK

NOTES:

- WATER TABLE AT THE TIME OF DRILLING
- N — NUMBERS TO THE LEFT OF BORINGS INDICATE SPT VALUE FOR 1 FOOT (12") PENETRATION (UNLESS OTHERWISE NOTED)
- d — DIAMETER
- t — TIME
- NA — NOT AVAILABLE
- CR — CORE RECOVERY
- RQD — ROCK QUALITY DESIGNATION
- δ — UNIT WEIGHT lb/cft
- q_u — UNCONFINED COMPRESSION AT SAMPLE DEPTH (tsf)
- q_{st} — SPLIT TENSILE STRENGTH AT SAMPLE DEPTH (tsf)
- ⟵ — LOSS OF CIRCULATION
- WOH — WEIGHT OT THE HAMMER
- CASING USED

GRANULAR MATERIALS

RELATIVE DENSITY	SAFETY HAMMER SPT N-VALUE (BLOW/FOOT)	AUTOMATIC HAMMER SPT N-VALUE (BLOW/FOOT)
VERY LOOSE	LESS THAN 4	LESS THAN 3
LOOSE	4 - 10	3 - 7
MEDIUM DENSE	10 - 30	7 - 21
DENSE	30 - 50	21 - 35
VERY DENSE	GREATER THAN 50	GREATER THAN 35

NOTES:

1. THE LIMESTONE MAY BE HARD TO EXCAVATE AND DEWATER; SPECIAL EQUIPMENT AND TOOLS MAY BE REQUIRED.
2. BORING LOCATIONS (STATIONS AND OFFSETS) BASED ON 70% PRELIMINARY ENGINEERING ALIGNMENT. SEE BORING LOCATION PLANS FOR SPECIFIC COORDINATE DATA.

ENVIRONMENTAL CLASSIFICATION

SEE THE GEOTECHNICAL REPORT

RELATION OF RQD AND IN-SITU ROCK QUALITY	
RQD (%)	ROCK QUALITY
90-100	EXCELLENT
75-90	GOOD
50-75	FAIR
25-50	POOR
0-25	VERY POOR

SK	05-06					
Designed by	Date					
SK/EP	05-06					
Drawn by	Date					
AK	05-06					
Checked by	Date					
Approved by	Date	No.	Date	By / Chk	App.	Revisions

NORTH CORRIDOR METRORAIL EXTENSION - PRELIMINARY ENGINEERING (100% SUBMITTAL)

MIAMI-DADE COUNTY — MIAMI-DADE TRANSIT

PARSONS
7600 CORPORATE CENTER DRIVE, SUITE 500
MIAMI, FLORIDA 33126
PHONE: (786) 464-1000 FAX: (786) 845-7119
CERTIFICATE OF AUTHORIZATION NO. 1836

HP CONSULTANTS INC.
License No. 9509
ARVIND KUMBHOJKAR, PH.D. P.E.
License No. 41067
10220 SW 107 Street
Miami, Fl 33176 Ph:(305)596-1585

Approved | Date | Approved | Date

GEOTECHNICAL

REPORT OF CORE BORINGS

Scale 1" = 16' | Drawing GE-059 | Sheet 451

5/4/2006 1:49:38 AM c:\HP\BORING_PROFILE\Rgeonc13.dgn

BORING No.: B-153
LOCATION: 505+07.155 (17.635' LT)
ELEVATION: 6.76
HAMMER: SAFETY
TYPE OF RIG: B-53
DATE: 0/18/05

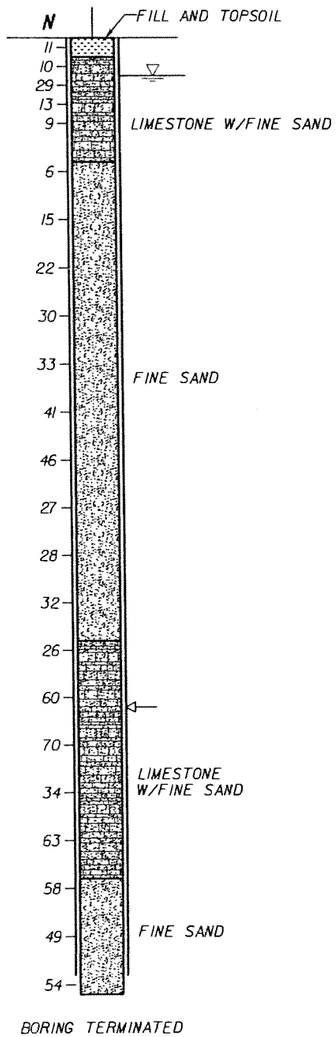

BORING TERMINATED AT 100 FT DEPTH

BORING No.: B-154
LOCATION: 514+17.860 (18.053' LT)
ELEVATION: 6.05
HAMMER: SAFETY
TYPE OF RIG: B-53
DATE: 06/17/05

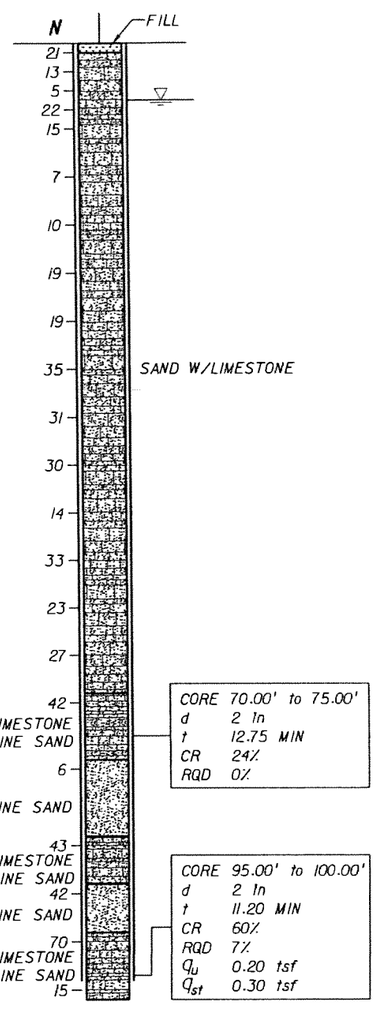

BORING TERMINATED AT 100 FT DEPTH

BORING No.: B-155
LOCATION: 516+09.581 (20.612' RT)
ELEVATION: 6.99
HAMMER: SAFETY
TYPE OF RIG: B-53
DATE: 06/16/05

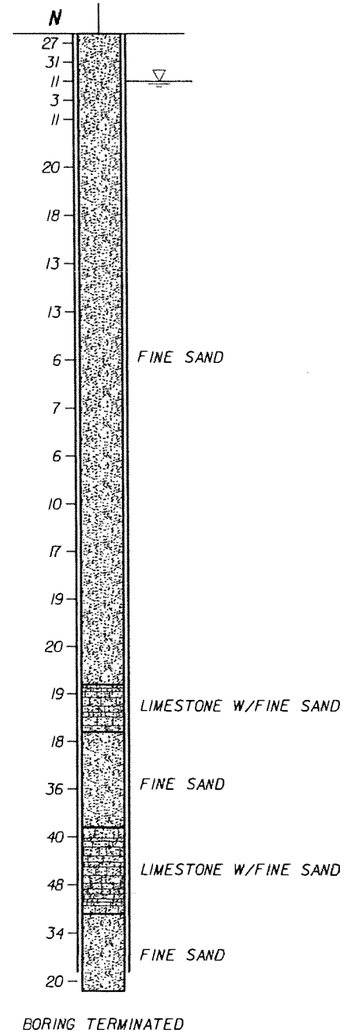

BORING TERMINATED AT 100 FT DEPTH

BORING No.: B-156
LOCATION: 519++95.387 (88.546' RT)
ELEVATION: 6.27
HAMMER: SAFETY
TYPE OF RIG: B-53
DATE: 06/20/05

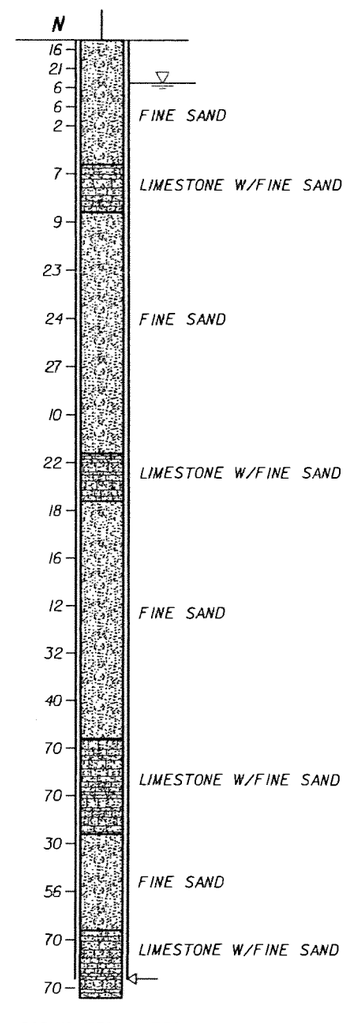

BORING TERMINATED AT 100 FT DEPTH

ELEVATION (FEET)

VERTICAL SCALE: 1"=16'

LEGEND:

- ASPHALT PAVEMENT
- (TOPSOIL) BLACK/DARK BROWN/DARK GRAY TO GRAY, SILTY SAND WITH ROOTS, ORGANICS, AND OTHER MATERIALS
- (FILL) LIMEROCK FRAGMENTS, COARSE GRAVEL TO SILT SIZE, IN SHADES OF BROWN OR GRAY, OCCASIONALLY MIXED WITH TOP SOIL
- (FINE SAND) VERY LOOSE TO VERY DENSE, FINE-SAND-SIZE MATERIAL IN SHADES OF BROWN, GRAY, OR OTHERS COLORS, OCCASIONALLY ORGANIC STAINED
- (SILTY SAND) SILTY SAND-SIZE MATERIAL IN SHADES OF BROWN/GRAY/OTHER COLORS POSSIBLY DISINTEGRATED SEDIMETARY ROCK
- (LIMESTONE WITH FINE SAND) VUGGY, SEDIMENTARY ROCK MADE OF $CaCO_3$, WITH SAND-SIZE MATERIAL, IN SHADES OF BROWN/GRAY/OTHER COLORS, OCCASIONALLY WITH SANDSTONE AND SHELL FRAGMENTS
- (SAND WITH LIMESTONE) SAND-SIZE MATERIAL WITH LIMESTONE FRAGMENTS IN SHADES OF BROWN, GRAY, OR OTHER COLORS, SOMETIMES WITH SANDSTONE FRAGMENTS
- (ORGANICS) DARK GRAY TO BLACK, SILT TO FINE-SAND-SIZE MATERIAL HAVING ORGANIC CONTENT> 5%
- (SANDSTONE WITH SAND) SEDIMENTARY ROCK MADE OF SAND-SIZE MATERIAL IN $CaCO_3$ MATRIX, IN SHADES OF BROWN OR GRAY, WITH FINE-SAND-SIZE MATERIAL
- (SAND WITH SANDSTONE) SAND-SIZE MATERIAL WITH SANDSTONE FRAGMENTS IN SHADES OF BROWN/GRAY/ OTHER COLORS
- (SANDY SILT) SANDY, SILT-SIZE MATERIAL IN SHADES OF BLACK/BROWN/GRAY, POSSIBLY DISINTEGRATED SEDIMETARY ROCK

NOTES:

- WATER TABLE AT THE TIME OF DRILLING
- N — NUMBERS TO THE LEFT OF BORINGS INDICATE SPT VALUE FOR 1 FOOT (12") PENETRATION (UNLESS OTHERWISE NOTED)
- d — DIAMETER
- t — TIME
- NA — NOT AVAILABLE
- CR — CORE RECOVERY
- RQD — ROCK QUALITY DESIGNATION
- γ — UNIT WEIGHT lb/cft
- q_u — UNCONFINED COMPRESSION AT SAMPLE DEPTH (tsf)
- q_{st} — SPLIT TENSILE STRENGTH AT SAMPLE DEPTH (tsf)
- ⟵ — LOSS OF CIRCULATION
- WOH — WEIGHT OT THE HAMMER
- CASING USED

GRANULAR MATERIALS

RELATIVE DENSITY	SAFETY HAMMER SPT N-VALUE (BLOW/FOOT)	AUTOMATIC HAMMER SPT N-VALUE (BLOW/FOOT)
VERY LOOSE	LESS THAN 4	LESS THAN 3
LOOSE	4 - 10	3 - 7
MEDIUM DENSE	10 - 30	7 - 21
DENSE	30 - 50	21 - 35
VERY DENSE	GREATER THAN 50	GREATER THAN 35

RELATION OF RQD AND IN-SITU ROCK QUALITY

RQD (%)	ROCK QUALITY
90-100	EXCELLENT
75-90	GOOD
50-75	FAIR
25-50	POOR
0-25	VERY POOR

ENVIRONMENTAL CLASSIFICATION

SEE THE GEOTECHNICAL REPORT

NOTES:

1. THE LIMESTONE MAY BE HARD TO EXCAVATE AND DEWATER; SPECIAL EQUIPMENT AND TOOLS MAY BE REQUIRED.
2. BORING LOCATIONS (STATIONS AND OFFSETS) BASED ON 70% PRELIMINARY ENGINEERING ALIGNMENT. SEE BORING LOCATION PLANS FOR SPECIFIC COORDINATE DATA.

SK	05-06					
Designed by	Date					
SK/EP	05-06					
Drawn by	Date					
AK	05-06					
Checked by	Date					
Approved by	Date	No.	Date	By / Chk	App.	Revisions

NORTH CORRIDOR METRORAIL EXTENSION - PRELIMINARY ENGINEERING (100% SUBMITTAL)

MIAMI-DADE COUNTY — MIAMI-DADE TRANSIT

PARSONS
7800 CORPORATE CENTER DRIVE, SUITE 500
MIAMI, FLORIDA 33126
PHONE: (786) 464-1000 FAX: (786) 845-7119
CERTIFICATE OF AUTHORIZATION NO. 1838
Approved | Date

HP CONSULTANTS INC.
License No. 9509
ARVIND KUMBHOJKAR, PH.D. P.E.
License No. 41067
10220 SW 107 Street
Miami, Fl 33176 Ph:(305)596-1585
Approved | Date

GEOTECHNICAL

REPORT OF CORE BORINGS

Scale 1" = 16' | Drawing GE-060 | Sheet 452

5/4/2006 1:49:56 AM c:\HP\BORING_PROFILE\Rgeonc13.dgn

BORING No.: B-157
LOCATION: 522+64.171 (61.185' RT)
ELEVATION: 6.09
HAMMER: SAFETY
TYPE OF RIG: B-53
DATE: 06/23/05

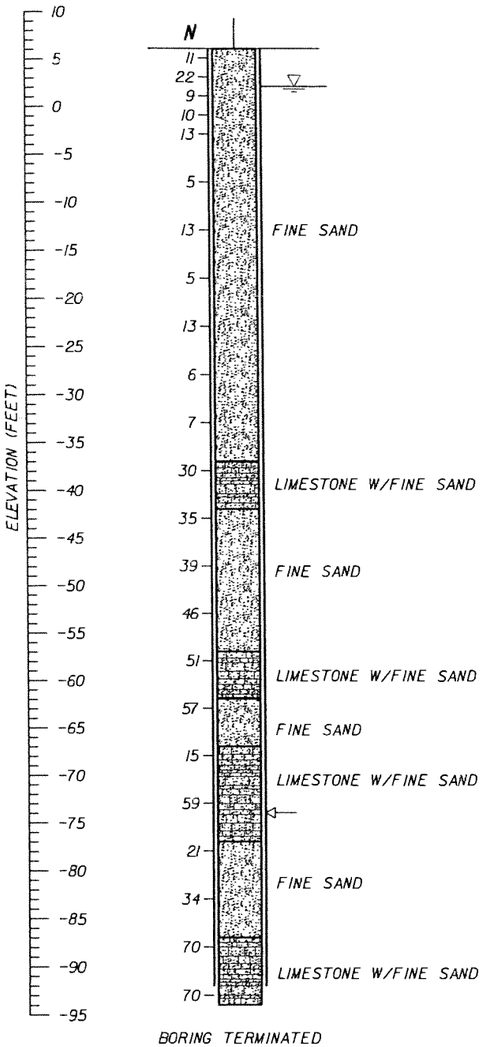

BORING TERMINATED AT 100 FT DEPTH

BORING No.: B-158
LOCATION: 524+33.445 (42.779' RT)
ELEVATION: 5.29
HAMMER: SAFETY
TYPE OF RIG: B-53
DATE: 06/18/05

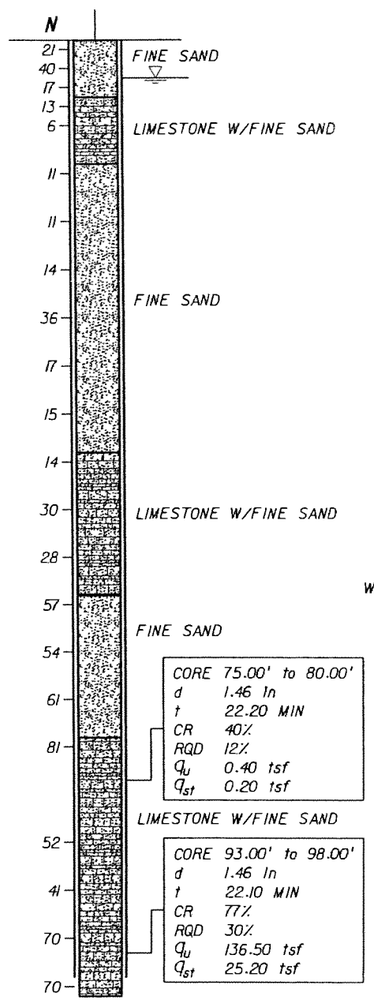

BORING TERMINATED AT 100 FT DEPTH

BORING No.: B-159
LOCATION: 526+03.176 (14.231' RT)
ELEVATION: 5.42
HAMMER: SAFETY
TYPE OF RIG: B-53
DATE: 06/06/05

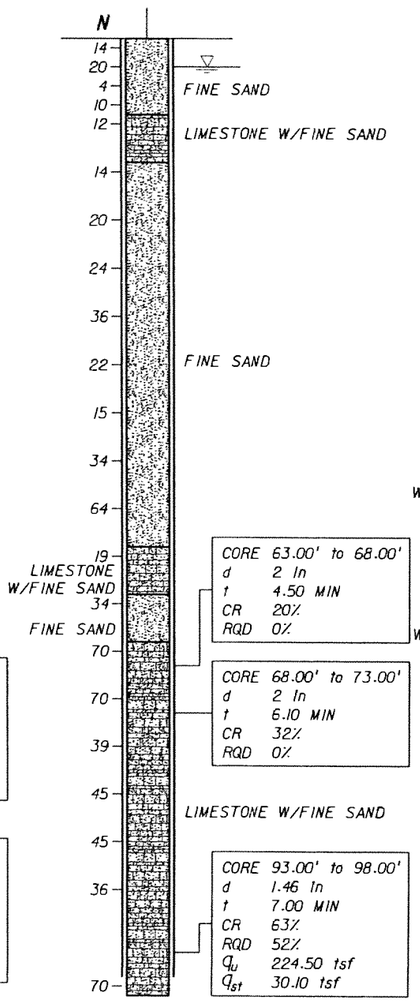

BORING TERMINATED AT 100 FT DEPTH

BORING No.: B-160
LOCATION: 527+26.781 (2.742' LT)
ELEVATION: 5.69
HAMMER: SAFETY
TYPE OF RIG: B-53
DATE: 06/13/05

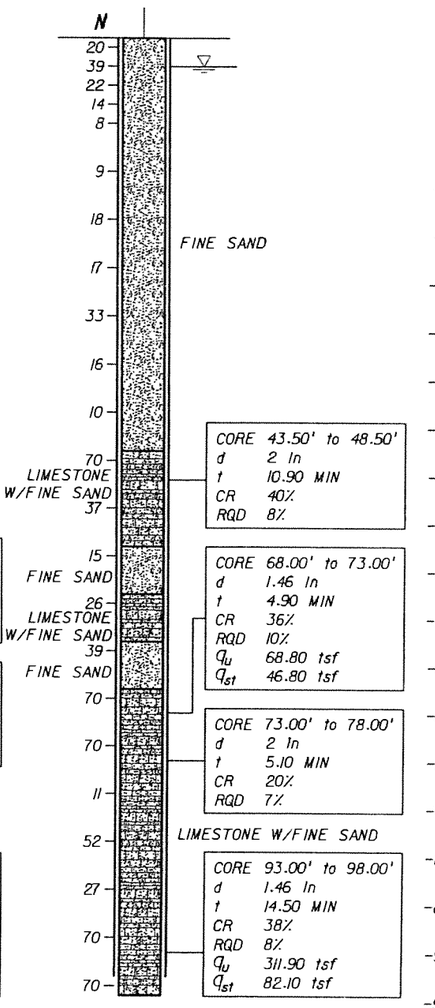

BORING TERMINATED AT 100 FT DEPTH

VERTICAL SCALE: 1"=16'

LEGEND:

- ASPHALT PAVEMENT
- (TOPSOIL) BLACK/DARK BROWN/DARK GRAY TO GRAY, SILTY SAND WITH ROOTS, ORGANICS, AND OTHER MATERIALS
- (FILL) LIMEROCK FRAGMENTS, COARSE GRAVEL TO SILT SIZE, IN SHADES OF BROWN OR GRAY, OCCASIONALLY MIXED WITH TOP SOIL
- (FINE SAND) VERY LOOSE TO VERY DENSE, FINE-SAND-SIZE MATERIAL IN SHADES OF BROWN, GRAY, OR OTHERS COLORS, OCCASIONALLY ORGANIC STAINED
- (SILTY SAND) SILTY SAND-SIZE MATERIAL IN SHADES OF BROWN/GRAY/OTHER COLORS POSSIBLY DISINTEGRATED SEDIMETARY ROCK
- (LIMESTONE WITH FINE SAND) VUGGY, SEDIMENTARY ROCK MADE OF $CaCO_3$, WITH SAND-SIZE MATERIAL, IN SHADES OF BROWN/GRAY/OTHER COLORS, OCCASIONALLY WITH SANDSTONE AND SHELL FRAGMENTS
- (SAND WITH LIMESTONE) SAND-SIZE MATERIAL WITH LIMESTONE FRAGMENTS IN SHADES OF BROWN, GRAY, OR OTHER COLORS, SOMETIMES WITH SANDSTONE FRAGMENTS
- (ORGANICS) DARK GRAY TO BLACK, SILT TO FINE-SAND-SIZE MATERIAL HAVING ORGANIC CONTENT> 5%
- (SANDSTONE WITH SAND) SEDIMENTARY ROCK MADE OF SAND-SIZE MATERIAL IN $CaCO_3$ MATRIX, IN SHADES OF BROWN OR GRAY, WITH FINE-SAND-SIZE MATERIAL
- (SAND WITH SANDSTONE) SAND-SIZE MATERIAL WITH SANDSTONE FRAGMENTS IN SHADES OF BROWN/GRAY/ OTHER COLORS
- (SANDY SILT) SANDY, SILT-SIZE MATERIAL IN SHADES OF BLACK/BROWN/GRAY, POSSIBLY DISINTEGRATED SEDIMETARY ROCK

NOTES:

- WATER TABLE AT THE TIME OF DRILLING
- N — NUMBERS TO THE LEFT OF BORINGS INDICATE SPT VALUE FOR 1 FOOT (12") PENETRATION (UNLESS OTHERWISE NOTED)
- d — DIAMETER
- t — TIME
- NA — NOT AVAILABLE
- CR — CORE RECOVERY
- RQD — ROCK QUALITY DESIGNATION
- γ_d — UNIT WEIGHT lb/cft
- q_u — UNCONFINED COMPRESSION AT SAMPLE DEPTH (tsf)
- q_{st} — SPLIT TENSILE STRENGTH AT SAMPLE DEPTH (tsf)
- ⟵ — LOSS OF CIRCULATION
- WOH — WEIGHT OT THE HAMMER
- CASING USED

NOTES:

1. THE LIMESTONE MAY BE HARD TO EXCAVATE AND DEWATER; SPECIAL EQUIPMENT AND TOOLS MAY BE REQUIRED.
2. BORING LOCATIONS (STATIONS AND OFFSETS) BASED ON 70% PRELIMINARY ENGINEERING ALIGNMENT. SEE BORING LOCATION PLANS FOR SPECIFIC COORDINATE DATA.

ENVIRONMENTAL CLASSIFICATION

SEE THE GEOTECHNICAL REPORT

RELATION OF RQD AND IN-SITU ROCK QUALITY

RQD (%)	ROCK QUALITY
90-100	EXCELLENT
75-90	GOOD
50-75	FAIR
25-50	POOR
0-25	VERY POOR

GRANULAR MATERIALS

RELATIVE DENSITY	SAFETY HAMMER SPT N-VALUE (BLOW/FOOT)	AUTOMATIC HAMMER SPT N-VALUE (BLOW/FOOT)
VERY LOOSE	LESS THAN 4	LESS THAN 3
LOOSE	4 - 10	3 - 7
MEDIUM DENSE	10 - 30	7 - 21
DENSE	30 - 50	21 - 35
VERY DENSE	GREATER THAN 50	GREATER THAN 35

SK	05-06				
Designed by	Date				
SK/EP	05-06				
Drawn by	Date				
AK	05-06				
Checked by	Date				
Approved by	Date	No.	Date	By / Chk	App. Revisions

NORTH CORRIDOR METRORAIL EXTENSION - PRELIMINARY ENGINEERING (100% SUBMITTAL)

MIAMI-DADE COUNTY — MIAMI-DADE TRANSIT

PARSONS
7600 CORPORATE CENTER DRIVE, SUITE 500
MIAMI, FLORIDA 33126
PHONE: (786) 464-1000 FAX: (786) 845-7119
CERTIFICATE OF AUTHORIZATION NO. 1838
Approved / Date

HP CONSULTANTS INC.
License No. 9509
ARVIND KUMBHOJKAR, PH.D. P.E.
License No. 41067
10220 SW 107 Street
Miami, Fl 33176 Ph:(305)596-1585
Approved / Date

GEOTECHNICAL

REPORT OF CORE BORINGS

Scale 1" = 16' | Drawing GE-061 | Sheet 452

5/4/2006 1:50:28 AM c:\HP\BORING_PROFILE\Rgeonc14.dgn

BORING No.: B-161
LOCATION: 528+59.868 (6.426' LT)
ELEVATION: 6.22
HAMMER: SAFETY
TYPE OF RIG: B-53
DATE: 06/09/05

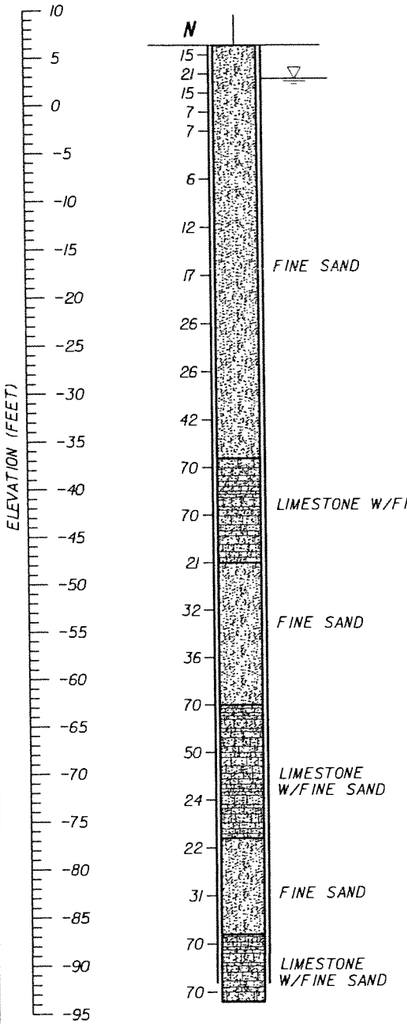

BORING TERMINATED AT 100 FT DEPTH

BORING No.: B-162
LOCATION: 530+06.562 (21.459' LT)
ELEVATION: 5.22
HAMMER: SAFETY
TYPE OF RIG: B-53
DATE: 06/10/05

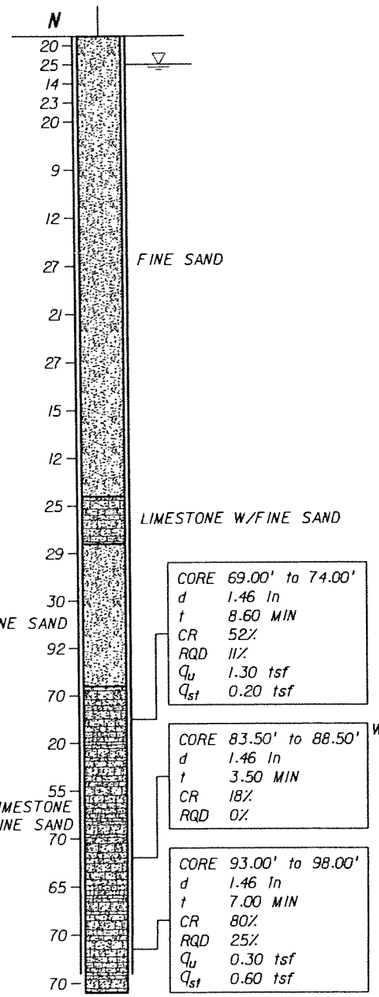

CORE 69.00' to 74.00'
d 1.46 In
t 8.60 MIN
CR 52%
RQD 11%
q_u 1.30 tsf
q_{st} 0.20 tsf

CORE 83.50' to 88.50'
d 1.46 In
t 3.50 MIN
CR 18%
RQD 0%

CORE 93.00' to 98.00'
d 1.46 In
t 7.00 MIN
CR 80%
RQD 25%
q_u 0.30 tsf
q_{st} 0.60 tsf

BORING TERMINATED AT 100 FT DEPTH

BORING No.: B-163
LOCATION: 532+16.119 (7.229' RT)
ELEVATION: 5.01
HAMMER: SAFETY
TYPE OF RIG: B-53
DATE: 06/08/05

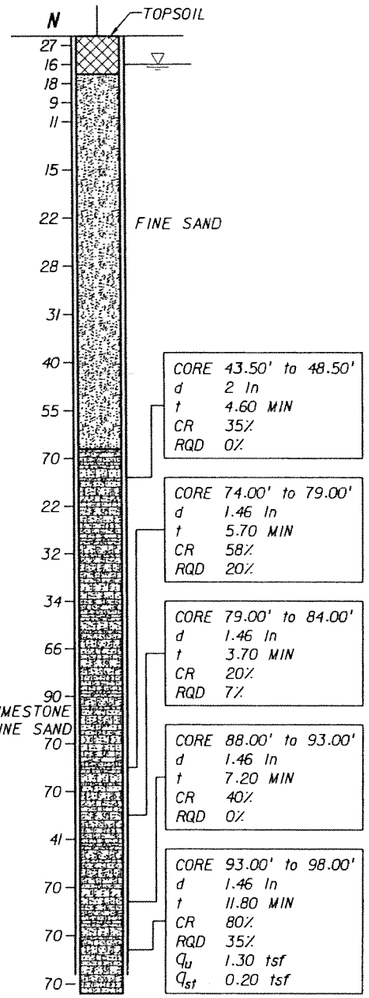

CORE 43.50' to 48.50'
d 2 In
t 4.60 MIN
CR 35%
RQD 0%

CORE 74.00' to 79.00'
d 1.46 In
t 5.70 MIN
CR 58%
RQD 20%

CORE 79.00' to 84.00'
d 1.46 In
t 3.70 MIN
CR 20%
RQD 7%

CORE 88.00' to 93.00'
d 1.46 In
t 7.20 MIN
CR 40%
RQD 0%

CORE 93.00' to 98.00'
d 1.46 In
t 11.80 MIN
CR 80%
RQD 35%
q_u 1.30 tsf
q_{st} 0.20 tsf

BORING TERMINATED AT 100 FT DEPTH

BORING No.: B-164
LOCATION: 535+56.121 (67.408' LT)
ELEVATION: 9.89
HAMMER: SAFETY
TYPE OF RIG: B-53
DATE: 06/08/05

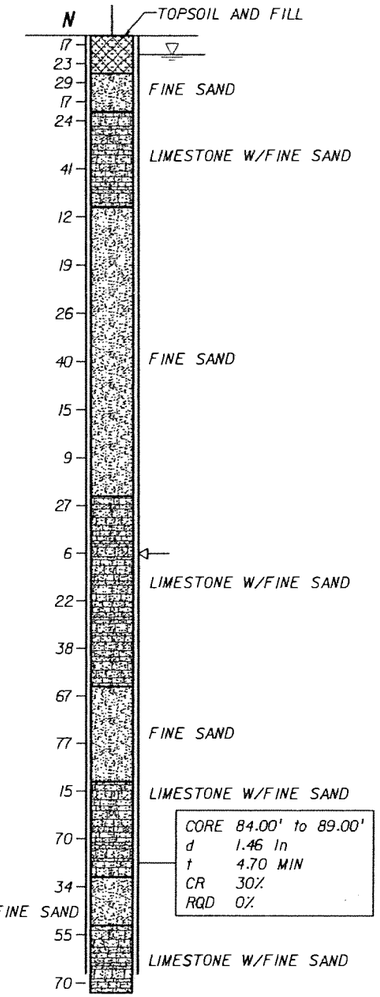

CORE 84.00' to 89.00'
d 1.46 In
t 4.70 MIN
CR 30%
RQD 0%

BORING TERMINATED AT 100 FT DEPTH

VERTICAL SCALE: 1"=16'

LEGEND:

- ASPHALT PAVEMENT
- (TOPSOIL) BLACK/DARK BROWN/DARK GRAY TO GRAY, SILTY SAND WITH ROOTS, ORGANICS, AND OTHER MATERIALS
- (FILL) LIMEROCK FRAGMENTS, COARSE GRAVEL TO SILT SIZE, IN SHADES OF BROWN OR GRAY, OCCASIONALLY MIXED WITH TOP SOIL
- (FINE SAND) VERY LOOSE TO VERY DENSE, FINE-SAND-SIZE MATERIAL IN SHADES OF BROWN, GRAY, OR OTHERS COLORS, OCCASIONALLY ORGANIC STAINED
- (SILTY SAND) SILTY SAND-SIZE MATERIAL IN SHADES OF BROWN/GRAY/OTHER COLORS POSSIBLY DISINTEGRATED SEDIMETARY ROCK
- (LIMESTONE WITH FINE SAND) VUGGY, SEDIMENTARY ROCK MADE OF $CaCO_3$, WITH SAND-SIZE MATERIAL, IN SHADES OF BROWN/GRAY/OTHER COLORS, OCCASIONALLY WITH SANDSTONE AND SHELL FRAGMENTS
- (SAND WITH LIMESTONE) SAND-SIZE MATERIAL WITH LIMESTONE FRAGMENTS IN SHADES OF BROWN, GRAY, OR OTHER COLORS, SOMETIMES WITH SANDSTONE FRAGMENTS
- (ORGANICS) DARK GRAY TO BLACK, SILT TO FINE-SAND-SIZE MATERIAL HAVING ORGANIC CONTENT> 5%
- (SANDSTONE WITH SAND) SEDIMENTARY ROCK MADE OF SAND-SIZE MATERIAL IN $CaCO_3$ MATRIX, IN SHADES OF BROWN OR GRAY, WITH FINE-SAND-SIZE MATERIAL
- (SAND WITH SANDSTONE) SAND-SIZE MATERIAL WITH SANDSTONE FRAGMENTS IN SHADES OF BROWN/GRAY/OTHER COLORS
- (SANDY SILT) SANDY, SILT-SIZE MATERIAL IN SHADES OF BLACK/BROWN/GRAY, POSSIBLY DISINTEGRATED SEDIMETARY ROCK

NOTES:

- WATER TABLE AT THE TIME OF DRILLING
- **N** NUMBERS TO THE LEFT OF BORINGS INDICATE SPT VALUE FOR 1 FOOT (12") PENETRATION (UNLESS OTHERWISE NOTED)
- d DIAMETER
- t TIME
- NA NOT AVAILABLE
- CR CORE RECOVERY
- RQD ROCK QUALITY DESIGNATION
- δ UNIT WEIGHT lb/cft
- q_u UNCONFINED COMPRESSION AT SAMPLE DEPTH (tsf)
- q_{st} SPLIT TENSILE STRENGTH AT SAMPLE DEPTH (tsf)
- ◁— LOSS OF CIRCULATION
- WOH WEIGHT OT THE HAMMER
- CASING USED

GRANULAR MATERIALS

RELATIVE DENSITY	SAFETY HAMMER SPT N-VALUE (BLOW/FOOT)	AUTOMATIC HAMMER SPT N-VALUE (BLOW/FOOT)
VERY LOOSE	LESS THAN 4	LESS THAN 3
LOOSE	4 - 10	3 - 7
MEDIUM DENSE	10 - 30	7 - 21
DENSE	30 - 50	21 - 35
VERY DENSE	GREATER THAN 50	GREATER THAN 35

NOTES:

1. THE LIMESTONE MAY BE HARD TO EXCAVATE AND DEWATER; SPECIAL EQUIPMENT AND TOOLS MAY BE REQUIRED.
2. BORING LOCATIONS (STATIONS AND OFFSETS) BASED ON 70% PRELIMINARY ENGINEERING ALIGNMENT. SEE BORING LOCATION PLANS FOR SPECIFIC COORDINATE DATA.

ENVIRONMENTAL CLASSIFICATION

SEE THE GEOTECHNICAL REPORT

RELATION OF RQD AND IN-SITU ROCK QUALITY	
RQD (%)	ROCK QUALITY
90-100	EXCELLENT
75-90	GOOD
50-75	FAIR
25-50	POOR
0-25	VERY POOR

SK	05-06					
Designed by	Date					
SK/EP	05-06					
Drawn by	Date					
AK	05-06					
Checked by	Date					
Approved by	Date	No.	Date	By / Chk	App.	Revisions

NORTH CORRIDOR METRORAIL EXTENSION - PRELIMINARY ENGINEERING (100% SUBMITTAL)

MIAMI-DADE COUNTY — MIAMI-DADE TRANSIT

PARSONS
7500 CORPORATE CENTER DRIVE, SUITE 500
MIAMI, FLORIDA 33126
PHONE: (786) 464-1000 FAX: (786) 845-7119
CERTIFICATE OF AUTHORIZATION NO. 1838
Approved | Date

HP CONSULTANTS INC.
License No. 9509
ARVIND KUMBHOJKAR, PH.D, P.E.
License No. 41067
10220 SW 107 Street
Miami, FL 33176 Ph:(305)596-1585
Approved | Date

GEOTECHNICAL

REPORT OF CORE BORINGS

Scale 1" = 16' | Drawing GE-062 | Sheet 454

5/4/2006 1:50:52 AM c:\HP\BORING_PROFILE\Rgeonc14.dgn

BORING No.: B-165
LOCATION: 536+23.076 (42.879' LT)
ELEVATION: 8.24
HAMMER: SAFETY
TYPE OF RIG: B-53
DATE: 06/08/05

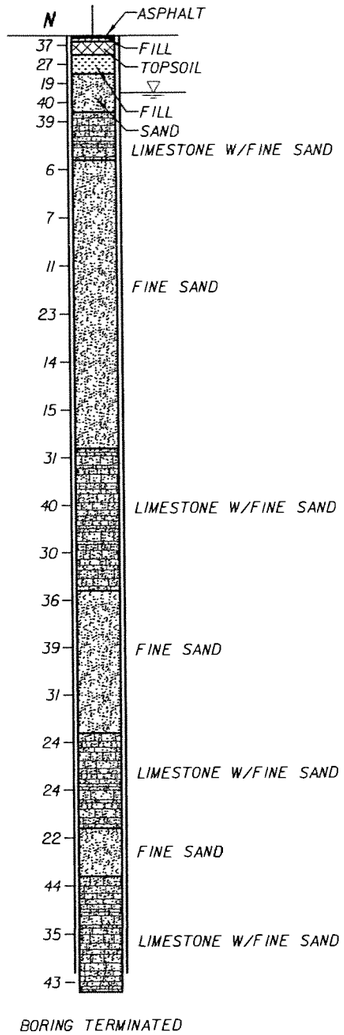

BORING TERMINATED AT 100 FT DEPTH

BORING No.: B-166
LOCATION: 540+54.468 (16.255' LT)
ELEVATION: 11.35
HAMMER: SAFETY
TYPE OF RIG: B-53
DATE: 06/13/05

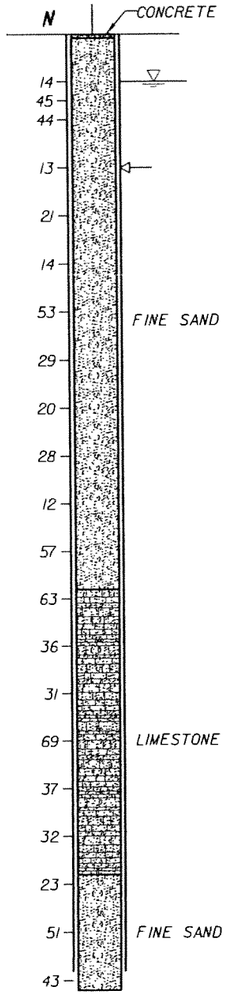

BORING TERMINATED AT 100 FT DEPTH

BORING No.: B-167
LOCATION: 543+40.636 (9.113' LT)
ELEVATION: 7.42
HAMMER: SAFETY
TYPE OF RIG: B-53
DATE: 06/14/05

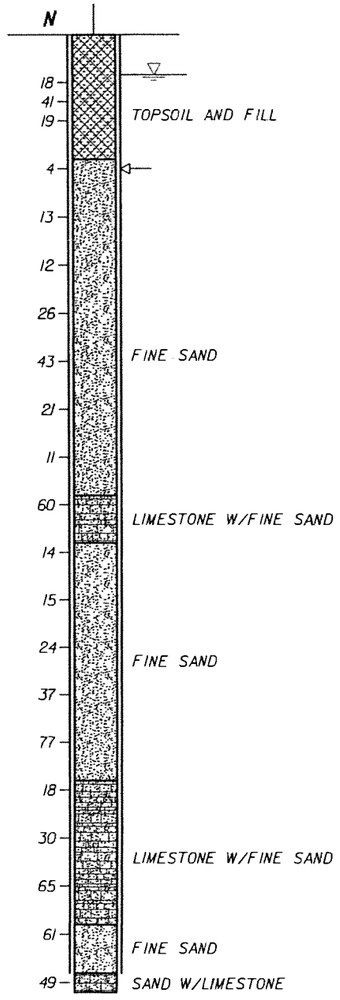

BORING TERMINATED AT 100 FT DEPTH

VERTICAL SCALE: 1"=16'

BORING No.: B-168
LOCATION: 546+71.017 (8.937' LT)
ELEVATION: 6.28
HAMMER: SAFETY
TYPE OF RIG: B-53
DATE: 06/18/05

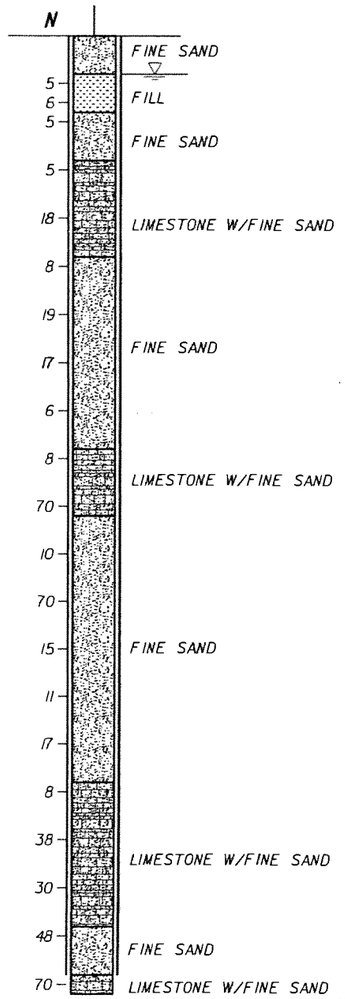

BORING TERMINATED AT 100 FT DEPTH

ENVIRONMENTAL CLASSIFICATION

SEE THE GEOTECHNICAL REPORT

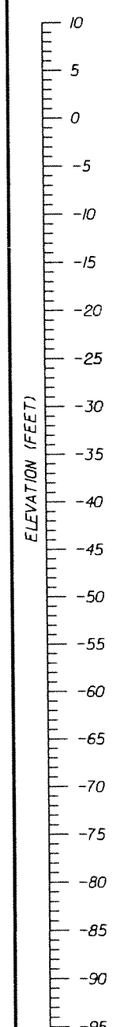

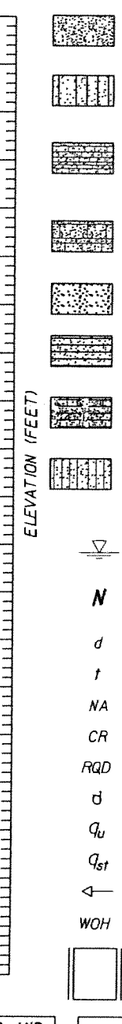

LEGEND:

- ASPHALT PAVEMENT
- (TOPSOIL) BLACK/DARK BROWN/DARK GRAY TO GRAY, SILTY SAND WITH ROOTS, ORGANICS, AND OTHER MATERIALS
- (FILL) LIMEROCK FRAGMENTS, COARSE GRAVEL TO SILT SIZE, IN SHADES OF BROWN OR GRAY, OCCASIONALLY MIXED WITH TOP SOIL
- (FINE SAND) VERY LOOSE TO VERY DENSE, FINE-SAND-SIZE MATERIAL IN SHADES OF BROWN, GRAY, OR OTHERS COLORS, OCCASIONALLY ORGANIC STAINED
- (SILTY SAND) SILTY SAND-SIZE MATERIAL IN SHADES OF BROWN/GRAY/OTHER COLORS POSSIBLY DISINTEGRATED SEDIMETARY ROCK
- (LIMESTONE WITH FINE SAND) VUGGY, SEDIMENTARY ROCK MADE OF $CaCO_3$, WITH SAND-SIZE MATERIAL, IN SHADES OF BROWN/GRAY/OTHER COLORS, OCCASIONALLY WITH SANDSTONE AND SHELL FRAGMENTS
- (SAND WITH LIMESTONE) SAND-SIZE MATERIAL WITH LIMESTONE FRAGMENTS IN SHADES OF BROWN, GRAY, OR OTHER COLORS, SOMETIMES WITH SANDSTONE FRAGMENTS
- (ORGANICS) DARK GRAY TO BLACK, SILT TO FINE-SAND-SIZE MATERIAL HAVING ORGANIC CONTENT> 5%
- (SANDSTONE WITH SAND) SEDIMENTARY ROCK MADE OF SAND-SIZE MATERIAL IN $CaCO_3$ MATRIX, IN SHADES OF BROWN OR GRAY, WITH FINE-SAND-SIZE MATERIAL
- (SAND WITH SANDSTONE) SAND-SIZE MATERIAL WITH SANDSTONE FRAGMENTS IN SHADES OF BROWN/GRAY/OTHER COLORS
- (SANDY SILT) SANDY, SILT-SIZE MATERIAL IN SHADES OF BLACK/BROWN/GRAY, POSSIBLY DISINTEGRATED SEDIMETARY ROCK

NOTES:

- ▽ WATER TABLE AT THE TIME OF DRILLING
- N NUMBERS TO THE LEFT OF BORINGS INDICATE SPT VALUE FOR 1 FOOT (12") PENETRATION (UNLESS OTHERWISE NOTED)
- d DIAMETER
- t TIME
- NA NOT AVAILABLE
- CR CORE RECOVERY
- RQD ROCK QUALITY DESIGNATION
- γ_d UNIT WEIGHT lb/cft
- q_u UNCONFINED COMPRESSION AT SAMPLE DEPTH (tsf)
- q_{st} SPLIT TENSILE STRENGTH AT SAMPLE DEPTH (tsf)
- ⟵ LOSS OF CIRCULATION
- WOH WEIGHT OT THE HAMMER
- CASING USED

NOTES:

1. THE LIMESTONE MAY BE HARD TO EXCAVATE AND DEWATER; SPECIAL EQUIPMENT AND TOOLS MAY BE REQUIRED.
2. BORING LOCATIONS (STATIONS AND OFFSETS) BASED ON 70% PRELIMINARY ENGINEERING ALIGNMENT. SEE BORING LOCATION PLANS FOR SPECIFIC COORDINATE DATA.

RELATION OF RQD AND IN-SITU ROCK QUALITY

RQD (%)	ROCK QUALITY
90-100	EXCELLENT
75-90	GOOD
50-75	FAIR
25-50	POOR
0-25	VERY POOR

GRANULAR MATERIALS

RELATIVE DENSITY	SAFETY HAMMER SPT N-VALUE (BLOW/FOOT)	AUTOMATIC HAMMER SPT N-VALUE (BLOW/FOOT)
VERY LOOSE	LESS THAN 4	LESS THAN 3
LOOSE	4 - 10	3 - 7
MEDIUM DENSE	10 - 30	7 - 21
DENSE	30 - 50	21 - 35
VERY DENSE	GREATER THAN 50	GREATER THAN 35

SK	05-06				
Designed by	Date				
SK/EP	05-06				
Drawn by	Date				
AK	05-06				
Checked by	Date				
Approved by	Date	No.	Date	By / Chk	App.	Revisions

NORTH CORRIDOR METRORAIL EXTENSION - PRELIMINARY ENGINEERING (100% SUBMITTAL)

MIAMI-DADE COUNTY

MIAMI-DADE TRANSIT

PARSONS
7800 CORPORATE CENTER DRIVE, SUITE 500
MIAMI, FLORIDA 33126
PHONE: (786) 464-1000 FAX: (786) 845-7119
CERTIFICATE OF AUTHORIZATION NO. 1838
Approved | Date

HP CONSULTANTS INC.
License No. 9509
ARVIND KUMBHOJKAR, PH.D, P.E.
License No. 41067
10220 SW 107 Street
Miami, Fl 33176 Ph:(305)596-1585
Approved | Date

GEOTECHNICAL

REPORT OF CORE BORINGS

Scale 1" = 16' | Drawing GE-063 | Sheet 455

5/4/2006 1:51:15 AM c:\HP\BORING_PROFILE\Rgeonc14.dgn

BORING No.: B-169
LOCATION: 552+23.441 (101.620' RT)
ELEVATION: 5.71
HAMMER: SAFETY
TYPE OF RIG: CME-75
DATE: 10/10/05

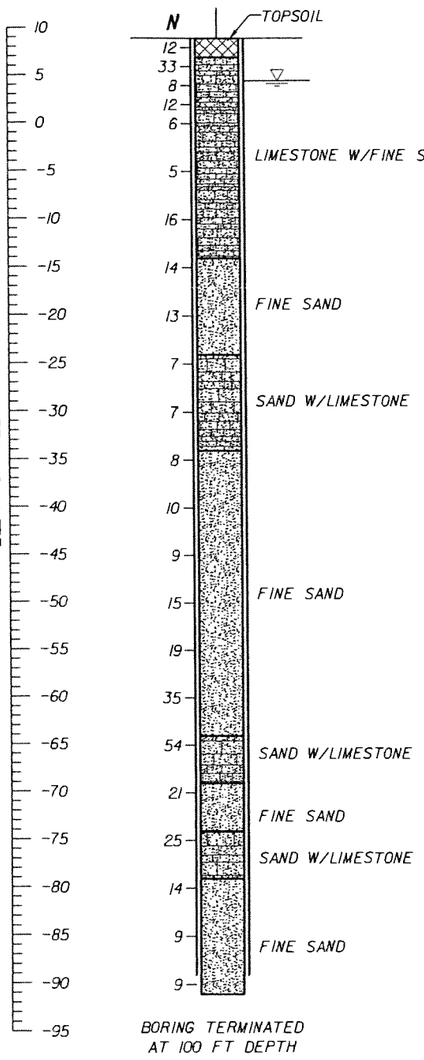

BORING TERMINATED AT 100 FT DEPTH

BORING No.: B-170
LOCATION: 554+48.574 (44.017' RT)
ELEVATION: 6.21
HAMMER: SAFETY
TYPE OF RIG: CME-75
DATE: 09/12/05

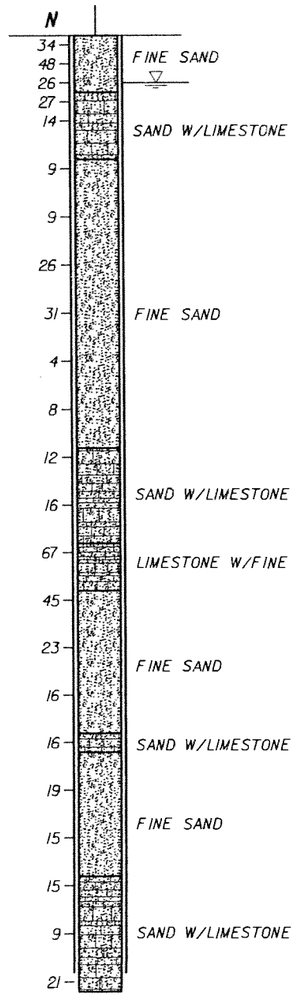

BORING TERMINATED AT 100 FT DEPTH

BORING No.: B-171
LOCATION: 556+36.124 (31.422' RT)
ELEVATION: 6.49
HAMMER: SAFETY
TYPE OF RIG: B-53
DATE: 06/07/05

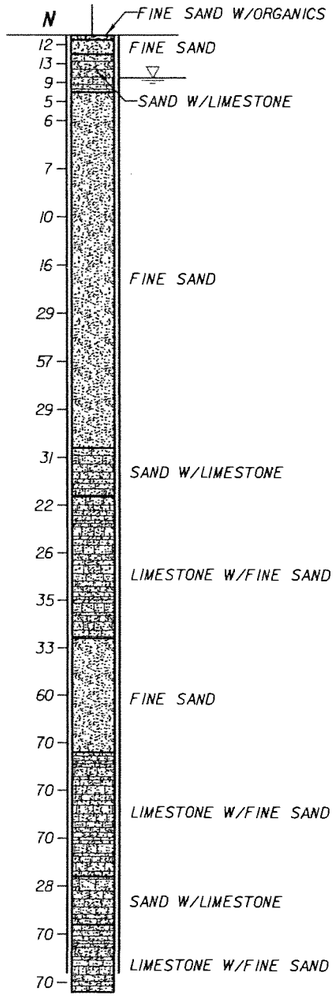

BORING TERMINATED AT 100 FT DEPTH

BORING No.: B-172
LOCATION: 558+58.878 (4.247' LT)
ELEVATION: 6.85
HAMMER: SAFETY
TYPE OF RIG: B-53
DATE: 06/06/05

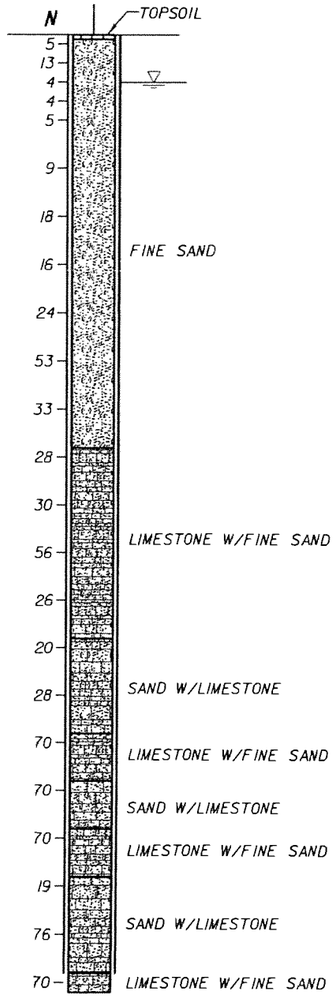

BORING TERMINATED AT 100 FT DEPTH

VERTICAL SCALE: 1"=16'

LEGEND:

- ASPHALT PAVEMENT
- (TOPSOIL) BLACK/DARK BROWN/DARK GRAY TO GRAY, SILTY SAND WITH ROOTS, ORGANICS, AND OTHER MATERIALS
- (FILL) LIMEROCK FRAGMENTS, COARSE GRAVEL TO SILT SIZE, IN SHADES OF BROWN OR GRAY, OCCASIONALLY MIXED WITH TOP SOIL
- (FINE SAND) VERY LOOSE TO VERY DENSE, FINE-SAND-SIZE MATERIAL IN SHADES OF BROWN, GRAY, OR OTHERS COLORS, OCCASIONALLY ORGANIC STAINED
- (SILTY SAND) SILTY SAND-SIZE MATERIAL IN SHADES OF BROWN/GRAY/OTHER COLORS POSSIBLY DISINTEGRATED SEDIMETARY ROCK
- (LIMESTONE WITH FINE SAND) VUGGY, SEDIMENTARY ROCK MADE OF $CaCO_3$, WITH SAND-SIZE MATERIAL, IN SHADES OF BROWN/GRAY/OTHER COLORS, OCCASIONALLY WITH SANDSTONE AND SHELL FRAGMENTS
- (SAND WITH LIMESTONE) SAND-SIZE MATERIAL WITH LIMESTONE FRAGMENTS IN SHADES OF BROWN, GRAY, OR OTHER COLORS, SOMETIMES WITH SANDSTONE FRAGMENTS
- (ORGANICS) DARK GRAY TO BLACK, SILT TO FINE-SAND-SIZE MATERIAL HAVING ORGANIC CONTENT > 5%
- (SANDSTONE WITH SAND) SEDIMENTARY ROCK MADE OF SAND-SIZE MATERIAL IN $CaCO_3$ MATRIX, IN SHADES OF BROWN OR GRAY, WITH FINE-SAND-SIZE MATERIAL
- (SAND WITH SANDSTONE) SAND-SIZE MATERIAL WITH SANDSTONE FRAGMENTS IN SHADES OF BROWN/GRAY/OTHER COLORS
- (SANDY SILT) SANDY, SILT-SIZE MATERIAL IN SHADES OF BLACK/BROWN/GRAY, POSSIBLY DISINTEGRATED SEDIMETARY ROCK

NOTES:

- WATER TABLE AT THE TIME OF DRILLING
- N — NUMBERS TO THE LEFT OF BORINGS INDICATE SPT VALUE FOR 1 FOOT (12") PENETRATION (UNLESS OTHERWISE NOTED)
- d — DIAMETER
- t — TIME
- NA — NOT AVAILABLE
- CR — CORE RECOVERY
- RQD — ROCK QUALITY DESIGNATION
- γ_d — UNIT WEIGHT lb/cft
- q_u — UNCONFINED COMPRESSION AT SAMPLE DEPTH (tsf)
- q_{st} — SPLIT TENSILE STRENGTH AT SAMPLE DEPTH (tsf)
- ⟵ — LOSS OF CIRCULATION
- WOH — WEIGHT OT THE HAMMER
- CASING USED

NOTES:

1. THE LIMESTONE MAY BE HARD TO EXCAVATE AND DEWATER; SPECIAL EQUIPMENT AND TOOLS MAY BE REQUIRED.
2. BORING LOCATIONS (STATIONS AND OFFSETS) BASED ON 70% PRELIMINARY ENGINEERING ALIGNMENT. SEE BORING LOCATION PLANS FOR SPECIFIC COORDINATE DATA.

ENVIRONMENTAL CLASSIFICATION

SEE THE GEOTECHNICAL REPORT

RELATION OF RQD AND IN-SITU ROCK QUALITY

RQD (%)	ROCK QUALITY
90-100	EXCELLENT
75-90	GOOD
50-75	FAIR
25-50	POOR
0-25	VERY POOR

GRANULAR MATERIALS

RELATIVE DENSITY	SAFETY HAMMER SPT N-VALUE (BLOW/FOOT)	AUTOMATIC HAMMER SPT N-VALUE (BLOW/FOOT)
VERY LOOSE	LESS THAN 4	LESS THAN 3
LOOSE	4 - 10	3 - 7
MEDIUM DENSE	10 - 30	7 - 21
DENSE	30 - 50	21 - 35
VERY DENSE	GREATER THAN 50	GREATER THAN 35

SK	05-06				
Designed by	Date				
SK/EP	05-06				
Drawn by	Date				
AK	05-06				
Checked by	Date				
Approved by	Date	No.	Date	By / Chk	App.	Revisions

NORTH CORRIDOR METRORAIL EXTENSION - PRELIMINARY ENGINEERING (100% SUBMITTAL)

GEOTECHNICAL

MIAMI-DADE COUNTY — MIAMI-DADE TRANSIT

PARSONS
7600 CORPORATE CENTER DRIVE, SUITE 500
MIAMI, FLORIDA 33126
PHONE: (786) 464-1000 FAX: (786) 845-7119
CERTIFICATE OF AUTHORIZATION NO. 1838

Approved / Date

HP CONSULTANTS INC.
License No. 9509
ARVIND KUMBHOJKAR, PH.D, P.E.
License No. 41067
10220 SW 107 Street
Miami, Fl 33176 Ph:(305)596-1585

Approved / Date

REPORT OF CORE BORINGS

Scale: 1" = 16' | Drawing: GE-064 | Sheet: 45

5/4/2006 1:51:46 AM c:\HP\BORING_PROFILE\Rgeonc15.dgn

BORING No.: B-173
LOCATION: 562+40.454 (55.501' LT)
ELEVATION: 6.47
HAMMER: SAFETY
TYPE OF RIG: B-47
DATE: 06/06/05

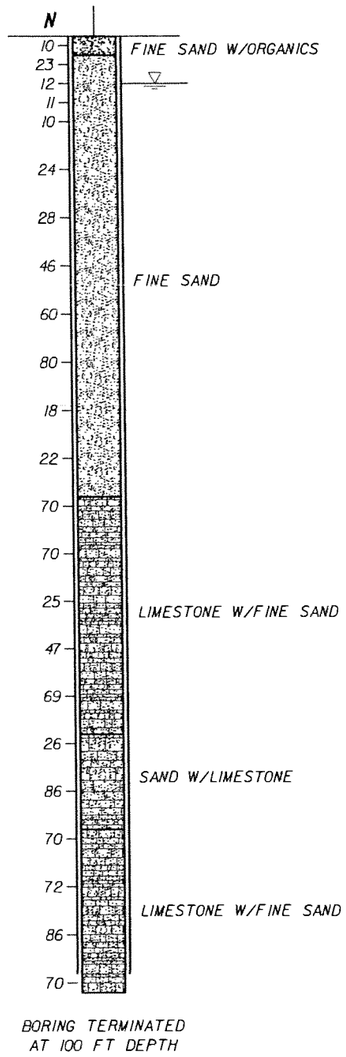

BORING TERMINATED AT 100 FT DEPTH

BORING No.: B-174
LOCATION: 563+87.209 (59.743' LT)
ELEVATION: 6.07
HAMMER: SAFETY
TYPE OF RIG: B-53
DATE: 06/06/05

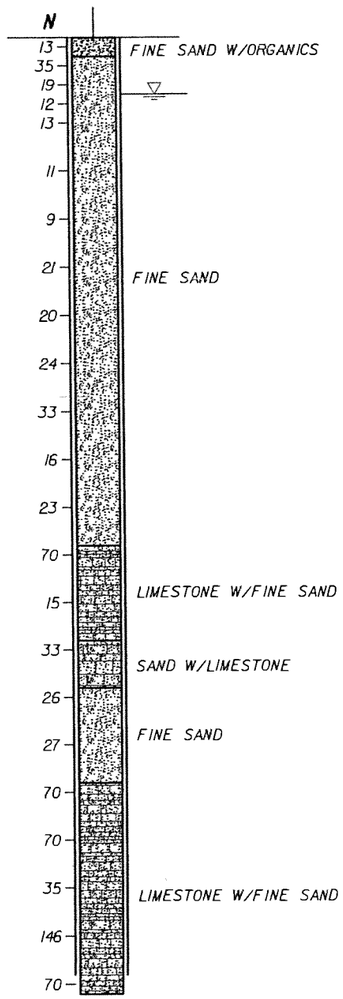

BORING TERMINATED AT 100 FT DEPTH

BORING No.: B-175
LOCATION: 565+16.631 (59.992' LT)
ELEVATION: 5.94
HAMMER: SAFETY
TYPE OF RIG: B-57
DATE: 05/26/05

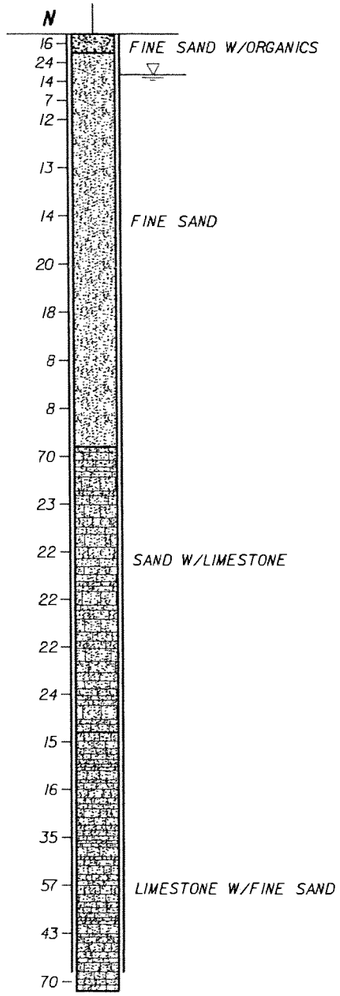

BORING TERMINATED AT 100 FT DEPTH

BORING No.: B-176
LOCATION: 568+05.747 (63.547' LT)
ELEVATION: 6.28
HAMMER: SAFETY
TYPE OF RIG: B-53
DATE: 05/25/05

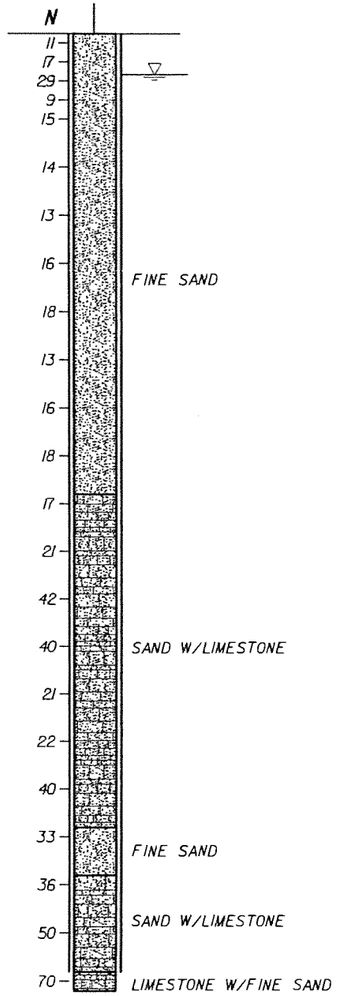

BORING TERMINATED AT 100 FT DEPTH

VERTICAL SCALE: 1"=16'

LEGEND:

- ASPHALT PAVEMENT
- (TOPSOIL) BLACK/DARK BROWN/DARK GRAY TO GRAY, SILTY SAND WITH ROOTS, ORGANICS, AND OTHER MATERIALS
- (FILL) LIMEROCK FRAGMENTS, COARSE GRAVEL TO SILT SIZE, IN SHADES OF BROWN OR GRAY, OCCASIONALLY MIXED WITH TOP SOIL
- (FINE SAND) VERY LOOSE TO VERY DENSE, FINE-SAND-SIZE MATERIAL IN SHADES OF BROWN, GRAY, OR OTHERS COLORS, OCCASIONALLY ORGANIC STAINED
- (SILTY SAND) SILTY SAND-SIZE MATERIAL IN SHADES OF BROWN/GRAY/OTHER COLORS POSSIBLY DISINTEGRATED SEDIMETARY ROCK
- (LIMESTONE WITH FINE SAND) VUGGY, SEDIMENTARY ROCK MADE OF $CaCO_3$, WITH SAND-SIZE MATERIAL, IN SHADES OF BROWN/GRAY/OTHER COLORS, OCCASIONALLY WITH SANDSTONE AND SHELL FRAGMENTS
- (SAND WITH LIMESTONE) SAND-SIZE MATERIAL WITH LIMESTONE FRAGMENTS IN SHADES OF BROWN, GRAY, OR OTHER COLORS, SOMETIMES WITH SANDSTONE FRAGMENTS
- (ORGANICS) DARK GRAY TO BLACK, SILT TO FINE-SAND-SIZE MATERIAL HAVING ORGANIC CONTENT > 5%
- (SANDSTONE WITH SAND) SEDIMENTARY ROCK MADE OF SAND-SIZE MATERIAL IN $CaCO_3$ MATRIX, IN SHADES OF BROWN OR GRAY, WITH FINE-SAND-SIZE MATERIAL
- (SAND WITH SANDSTONE) SAND-SIZE MATERIAL WITH SANDSTONE FRAGMENTS IN SHADES OF BROWN/GRAY/OTHER COLORS
- (SANDY SILT) SANDY, SILT-SIZE MATERIAL IN SHADES OF BLACK/BROWN/GRAY, POSSIBLY DISINTEGRATED SEDIMETARY ROCK

NOTES:

- WATER TABLE AT THE TIME OF DRILLING
- N — NUMBERS TO THE LEFT OF BORINGS INDICATE SPT VALUE FOR 1 FOOT (12") PENETRATION (UNLESS OTHERWISE NOTED)
- d — DIAMETER
- t — TIME
- NA — NOT AVAILABLE
- CR — CORE RECOVERY
- RQD — ROCK QUALITY DESIGNATION
- δ — UNIT WEIGHT lb/cft
- q_u — UNCONFINED COMPRESSION AT SAMPLE DEPTH (tsf)
- q_{st} — SPLIT TENSILE STRENGTH AT SAMPLE DEPTH (tsf)
- ⟵ — LOSS OF CIRCULATION
- WOH — WEIGHT OT THE HAMMER
- CASING USED

NOTES:

1. THE LIMESTONE MAY BE HARD TO EXCAVATE AND DEWATER; SPECIAL EQUIPMENT AND TOOLS MAY BE REQUIRED.
2. BORING LOCATIONS (STATIONS AND OFFSETS) BASED ON 70% PRELIMINARY ENGINEERING ALIGNMENT. SEE BORING LOCATION PLANS FOR SPECIFIC COORDINATE DATA.

ENVIRONMENTAL CLASSIFICATION

SEE THE GEOTECHNICAL REPORT

RELATION OF RQD AND IN-SITU ROCK QUALITY	
RQD (%)	ROCK QUALITY
90-100	EXCELLENT
75-90	GOOD
50-75	FAIR
25-50	POOR
0-25	VERY POOR

GRANULAR MATERIALS

RELATIVE DENSITY	SAFETY HAMMER SPT N-VALUE (BLOW/FOOT)	AUTOMATIC HAMMER SPT N-VALUE (BLOW/FOOT)
VERY LOOSE	LESS THAN 4	LESS THAN 3
LOOSE	4 - 10	3 - 7
MEDIUM DENSE	10 - 30	7 - 21
DENSE	30 - 50	21 - 35
VERY DENSE	GREATER THAN 50	GREATER THAN 35

SK	05-06
Designed by	Date
SK/EP	05-06
Drawn by	Date
AK	05-06
Checked by	Date
Approved by	Date

No.	Date	By / Chk	App.	Revisions

NORTH CORRIDOR METRORAIL EXTENSION - PRELIMINARY ENGINEERING (100% SUBMITTAL)

MIAMI-DADE COUNTY — MIAMI-DADE TRANSIT

PARSONS
7600 CORPORATE CENTER DRIVE, SUITE 500
MIAMI, FLORIDA 33126
PHONE: (786) 464-1000 FAX: (786) 845-7119
CERTIFICATE OF AUTHORIZATION NO. 1838

Approved / Date

HP CONSULTANTS INC.
License No. 9509
ARVIND KUMBHOJKAR, PH.D. P.E.
License No. 41067
10220 SW 107 Street
Miami, Fl 33176 Ph:(305)596-1585

Approved / Date

GEOTECHNICAL

REPORT OF CORE BORINGS

Scale	Drawing	Sheet
1" = 16'	GE-065	457

5/4/2006 1:52:05 AM c:\HP\BORING_PROFILE\Rgeonc15.dgn

BORING No.: B-177
LOCATION: 569+95.014 (57.579' LT)
ELEVATION: 5.97
HAMMER: SAFETY
TYPE OF RIG: B-53
DATE: 05/13/05

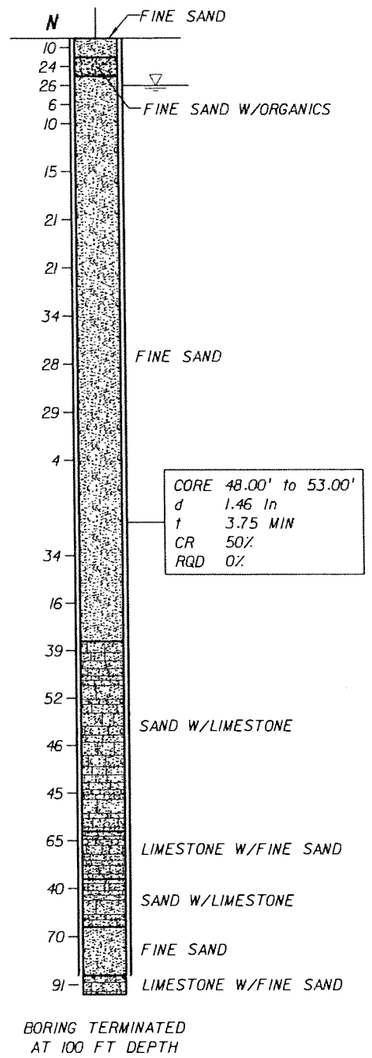

BORING TERMINATED AT 100 FT DEPTH

BORING No.: B-178
LOCATION: 571+70.274 (64.884' LT)
ELEVATION: 5.50
HAMMER: SAFETY
TYPE OF RIG: B-53
DATE: 05/12/05

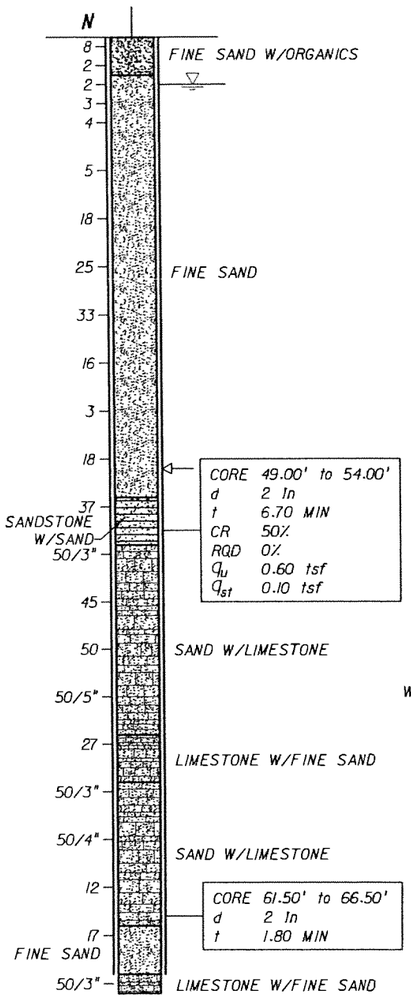

BORING TERMINATED AT 100 FT DEPTH

BORING No.: B-179
LOCATION: 574+88.404 (66.466' LT)
ELEVATION: 6.03
HAMMER: SAFETY
TYPE OF RIG: B-53
DATE: 05/10/05

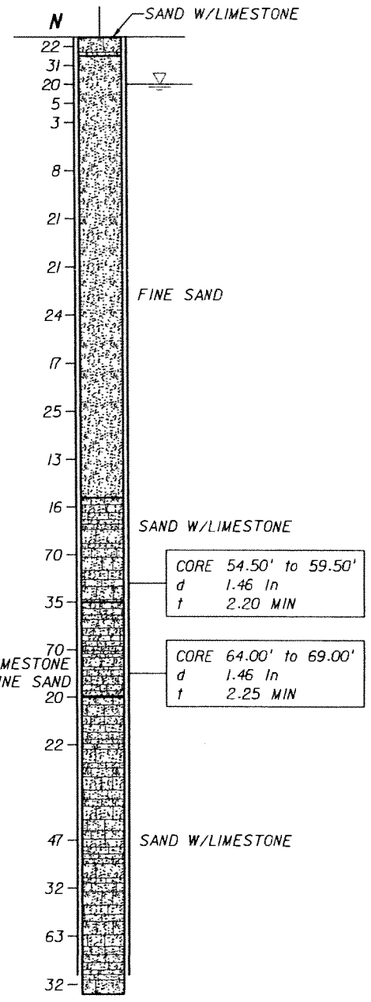

BORING TERMINATED AT 100 FT DEPTH

BORING No.: B-180
LOCATION: 576+02.167 (64.591' LT)
ELEVATION: 5.88
HAMMER: SAFETY
TYPE OF RIG: B-53
DATE: 05/04/05

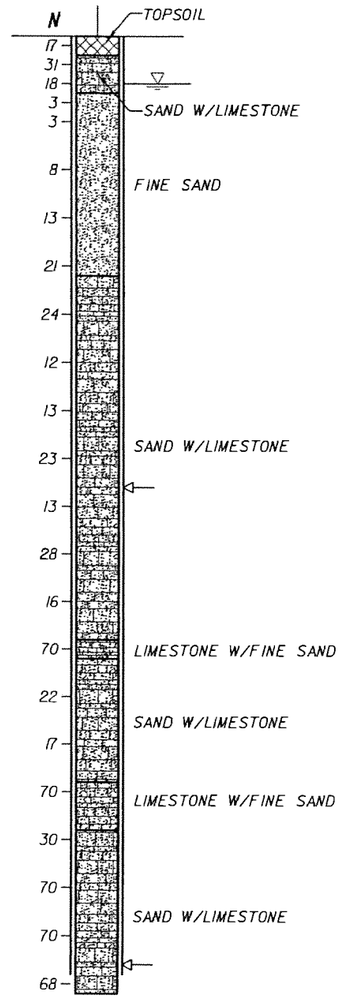

BORING TERMINATED AT 100 FT DEPTH

VERTICAL SCALE: 1"=16'

LEGEND:

- ASPHALT PAVEMENT
- (TOPSOIL) BLACK/DARK BROWN/DARK GRAY TO GRAY, SILTY SAND WITH ROOTS, ORGANICS, AND OTHER MATERIALS
- (FILL) LIMEROCK FRAGMENTS, COARSE GRAVEL TO SILT SIZE, IN SHADES OF BROWN OR GRAY, OCCASIONALLY MIXED WITH TOP SOIL
- (FINE SAND) VERY LOOSE TO VERY DENSE, FINE-SAND-SIZE MATERIAL IN SHADES OF BROWN, GRAY, OR OTHERS COLORS, OCCASIONALLY ORGANIC STAINED
- (SILTY SAND) SILTY SAND-SIZE MATERIAL IN SHADES OF BROWN/GRAY/OTHER COLORS POSSIBLY DISINTEGRATED SEDIMETARY ROCK
- (LIMESTONE WITH FINE SAND) VUGGY, SEDIMENTARY ROCK MADE OF $CaCO_3$, WITH SAND-SIZE MATERIAL, IN SHADES OF BROWN/GRAY/OTHER COLORS, OCCASIONALLY WITH SANDSTONE AND SHELL FRAGMENTS
- (SAND WITH LIMESTONE) SAND-SIZE MATERIAL WITH LIMESTONE FRAGMENTS IN SHADES OF BROWN, GRAY, OR OTHER COLORS, SOMETIMES WITH SANDSTONE FRAGMENTS
- (ORGANICS) DARK GRAY TO BLACK, SILT TO FINE-SAND-SIZE MATERIAL HAVING ORGANIC CONTENT > 5%
- (SANDSTONE WITH SAND) SEDIMENTARY ROCK MADE OF SAND-SIZE MATERIAL IN $CaCO_3$ MATRIX, IN SHADES OF BROWN OR GRAY, WITH FINE-SAND-SIZE MATERIAL
- (SAND WITH SANDSTONE) SAND-SIZE MATERIAL WITH SANDSTONE FRAGMENTS IN SHADES OF BROWN/GRAY/OTHER COLORS
- (SANDY SILT) SANDY, SILT-SIZE MATERIAL IN SHADES OF BLACK/BROWN/GRAY, POSSIBLY DISINTEGRATED SEDIMETARY ROCK

NOTES:

- WATER TABLE AT THE TIME OF DRILLING
- **N** NUMBERS TO THE LEFT OF BORINGS INDICATE SPT VALUE FOR 1 FOOT (12") PENETRATION (UNLESS OTHERWISE NOTED)
- d DIAMETER
- t TIME
- NA NOT AVAILABLE
- CR CORE RECOVERY
- RQD ROCK QUALITY DESIGNATION
- δ UNIT WEIGHT lb/cft
- q_u UNCONFINED COMPRESSION AT SAMPLE DEPTH (tsf)
- q_{st} SPLIT TENSILE STRENGTH AT SAMPLE DEPTH (tsf)
- ⟵ LOSS OF CIRCULATION
- WOH WEIGHT OT THE HAMMER
- CASING USED

NOTES:

1. THE LIMESTONE MAY BE HARD TO EXCAVATE AND DEWATER; SPECIAL EQUIPMENT AND TOOLS MAY BE REQUIRED.
2. BORING LOCATIONS (STATIONS AND OFFSETS) BASED ON 70% PRELIMINARY ENGINEERING ALIGNMENT. SEE BORING LOCATION PLANS FOR SPECIFIC COORDINATE DATA.

ENVIRONMENTAL CLASSIFICATION

SEE THE GEOTECHNICAL REPORT

RELATION OF RQD AND IN-SITU ROCK QUALITY

RQD (%)	ROCK QUALITY
90-100	EXCELLENT
75-90	GOOD
50-75	FAIR
25-50	POOR
0-25	VERY POOR

GRANULAR MATERIALS

RELATIVE DENSITY	SAFETY HAMMER SPT N-VALUE (BLOW/FOOT)	AUTOMATIC HAMMER SPT N-VALUE (BLOW/FOOT)
VERY LOOSE	LESS THAN 4	LESS THAN 3
LOOSE	4 - 10	3 - 7
MEDIUM DENSE	10 - 30	7 - 21
DENSE	30 - 50	21 - 35
VERY DENSE	GREATER THAN 50	GREATER THAN 35

SK	05-06				
Designed by	Date				
SK/EP	05-06				
Drawn by	Date				
AK	05-06				
Checked by	Date				
Approved by	Date	No.	Date	By / Chk	App.	Revisions

NORTH CORRIDOR METRORAIL EXTENSION - PRELIMINARY ENGINEERING (100% SUBMITTAL)

MIAMI-DADE COUNTY
MIAMI-DADE TRANSIT

PARSONS
7600 CORPORATE CENTER DRIVE, SUITE 500
MIAMI, FLORIDA 33126
PHONE: (786) 464-1000 FAX: (786) 845-7119
CERTIFICATE OF AUTHORIZATION NO. 1838

Approved | Date

HP CONSULTANTS INC.
License No. 9509
ARVIND KUMBHOJKAR, PH.D, P.E.
License No. 41067
10220 SW 107 Street
Miami, Fl 33176 Ph:(305)596-1585

Approved | Date

GEOTECHNICAL

REPORT OF CORE BORINGS

Scale 1" = 16' | Drawing GE-066 | Sheet 458

5/4/2006 1:52:33 AM c:\HP\BORING_PROFILE\Rgeonc15.dgn

TRAFFIC CONTROL GENERAL NOTES

1. TRAFFIC CONTROLS SHALL BE IN ACCORDANCE WITH THE PROJECT PLANS, THE CURRENT EDITION OF THE FLORIDA DOT DESIGN STANDARDS (600 SERIES), THE STANDARD SPECIFICATION FOR ROAD AND BRIDGE CONSTRUCTION, AND THE MANUAL ON UNIFORM TRAFFIC CONTROL DEVICES AS MINIMUM CRITERIA.

2. TEMPORARY PAVEMENT SHALL CONSIST OF A MINIMUM OF 6 IN OF LIMEROCK BASE, PRIME COAT AND 1 IN OF SUPERPAVE ASPHALTIC CONCRETE. THE BASE LAYER SHALL BE PLACED OVER A FIRM, UNYIELDING, WELL-COMPACTED SUBGRADE. COST OF CONSTRUCTION AND REMOVAL OF TEMPORARY PAVEMENT TO BE INCLUDED IN PAY ITEM 334-1-11, SUPERPAVE ASPHALTIC CONCRETE (TRAFFIC LEVEL C).

3. THE CONTRACTOR SHALL IMMEDIATELY REPAIR ALL POTHOLES THAT DEVELOP WITHIN THE PROJECT LIMITS AND WILL MAINTAIN A SUPPLY OF COLD MIX ON THE PROJECT SITE TO EXPEDITE THOSE REPAIRS. COST OF REPAIR TO BE INCLUDED IN PAY ITEM 102-1, MAINTENANCE OF TRAFFIC.

4. NOTIFICATION OF LANE CLOSURES OR TEMPORARY DETOURS SHALL BE ACCOMPLISHED 14 WORKING DAYS PRIOR TO CLOSURE OR DETOUR BY SUBMITTING THE REQUIRED LANE CLOSURE FORM, SKETCHES, CALCULATIONS, AND OTHER DATA THROUGH THE MIAMI-DADE TRANSIT PROJECT ENGINEER AND THE FDOT DISTRICT TRAFFIC OPERATIONS OFFICE.

5. AT THE DISCRETION OF THE ENGINEER, IF A LANE CLOSURE CAUSES EXTENDED CONGESTION OR DELAY, THE CONTRACTOR SHALL BE DIRECTED TO REOPEN THE CLOSED LANE(S) UNTIL SUCH TIME THAT THE TRAFFIC FLOW HAS RETURNED TO AN ACCEPTABLE LEVEL.

6. THE TRAFFIC AND TRAVEL WAYS SHALL NOT BE ALTERED BY THE CONTRACTOR TO CREATE A WORK ZONE UNTIL ALL LABOR, MATERIAL AND EQUIPMENT ARE AVAILABLE FOR THE CONSTRUCTION IN THAT AREA.

7. LANE CLOSURE SHALL OCCUR ONLY DURING NON-PEAK HOURS ON NON-EVENT DAYS/NIGHTS/WEEKENDS.
   NON-PEAK HOURS ARE:
   9:00 AM TO 3:30PM - WEEKDAYS AND WEEKENDS
   9:00PM TO 5:30AM - SUNDAY THROUGH THURSDAY NIGHTS
   11:00PM TO 7:00AM - FRIDAY AND SATURDAY NIGHTS

8. TRAFFIC CONTROL PLANS FOR PHASES I, II, III, AND IV ARE DESIGNED FOR NON-PEAK HOURS ONLY. THE CONTRACTOR SHALL KEEP ALL EXISTING LANES OPEN DURING PEAK HOURS IN THESE PHASES.

9. ALL WORK SHALL BE PERFORMED DURING DAYTIME ONLY.

10. REGULATORY SPEED ESTABLISHED WITHIN WORK ZONE TRAVEL WAYS SHALL BE 40 M.P.H. REDUCED SPEED AND REGULATORY SPEED SIGNS SHALL BE INSTALLED ON SEPARATE POSTS IN ACCORDANCE WITH THE STANDARD INDEXES.

11. AS DETERMINED BY THE ENGINEER, THE CONTRACTOR SHALL COVER WORK ZONE SIGNS WHEN CONDITIONS NO LONGER WARRANT THEIR USE. COST OF COVERING AND UNCOVERING THE SIGNS SHALL BE INCLUDED IN PAY ITEM 102-1, MAINTENANCE OF TRAFFIC.

12. CONTRACTOR SHALL REMOVE, RELOCATE OR COVER ANY EXISTING OR PROPOSED SIGNS THAT CONFLICT WITH THE TRAFFIC CONTROL PLANS. WHEN THE CONFLICT NO LONGER EXISTS, THE CONTRACTOR SHALL RESTORE THE SIGNS TO THEIR ORIGINAL POSITION. COST OF TEMPORARILY REMOVING, RELOCATING, COVERING AND RESTORING THE SIGNS SHALL BE INCLUDED IN PAY ITEM 102-1, MAINTENANCE OF TRAFFIC.

13. THE CONTRACTOR SHALL NOT PROPOSE AN ALTERNATIVE TRAFFIC CONTROL PLAN THAT REDUCES THE NUMBER OF TRAVEL LANES SHOWN ON THE CONTRACT TRAFFIC CONTROL PLANS.

14. ARROWS ON THE TCP DENOTE THE DIRECTION OF TRAFFIC ONLY AND DO NOT REFLECT PAVEMENT MARKINGS UNLESS SPECIFICALLY NOTED.

15. LANE CLOSURES SHALL NOT BE PERMITTED DURING SCHOOL SPEED ZONE HOURS WHERE SUCH CLOSURES WILL AFFECT TRAFFIC FLOW IN THE VICINITY OF THE SCHOOL SPEED ZONES.

16. EACH EXISTING STREET NAME AND STOP SIGN AFFECTED BY CONSTRUCTION SHALL BE RELOCATED AND MAINTAINED IN AN APPROPRIATE LOCATION FOR THE DURATION OF THE PROJECT. WHEN NO LONGER AFFECTED BY CONSTRUCTION, THESE SIGNS SHALL BE RESTORED TO THEIR ORIGINAL POSITION. COST OF TEMPORARILY RELOCATING AND RESTORING THE SIGNS SHALL BE INCLUDED IN PAY ITEM 102-1, MAINTENANCE OF TRAFFIC.

17. CONTRACTOR SHALL BE RESPONSIBLE FOR THE IMMEDIATE REMOVAL OF STORM WATER FROM ROADWAYS UTILIZED FOR MAINTAINING TRAFFIC IN A MANNER APPROVED BY THE ENGINEER. COST FOR REMOVING THE WATER SHALL BE INCLUDED IN PAY ITEM 102-1, MAINTENANCE OF TRAFFIC.

DROP OFFS:

18. FOR DROPS OFFS, THE CONTRACTOR'S ATTENTION IS DIRECTED TO STANDARD INDEX NO. 600, SHEET 7 OF 10 . THE CONTRACTOR SHALL USE SHOULDER TREATMENT DETAIL WHEN NO BARRIERS ARE REQUIRED IN THE PLANS.

MARKINGS:

19. THE CONTRACTOR SHALL REMOVE ANY EXISTING OR TEMPORARY PAVEMENT MARKINGS THAT CONFLICT WITH THE TRAFFIC CONTROL PLANS. GRINDING OR MILLING SHALL ONLY BE PERMITTED IN NON-TRAFFIC AREAS. COST OF REMOVAL OF TEMPORARY PAVEMENT MARKINGS, REGARDLESS OF METHOD, IS INCLUDED IN THE RELATED PAVEMENT MARKING PAY ITEMS. USE OF BLACK PAINT TO COVER EXISTING AND/OR TEMPORARY PAVEMENT MARKINGS IS PROHIBITED.

20. TEMPORARY LANE TRANSITIONS, SHIFTS, AND CROSSOVERS SHALL HAVE SOLID LANE AND EDGE LINES FOR THE LENGTH OF THE TRANSITION, SHIFT OR CROSSOVER. IN ADDITION, SOLID LANE AND EDGE LINES SHALL EXTEND 100 FT ON TANGENT BEYOND EACH END OF THE TRANSITION, SHIFT, OR CROSSOVER. EXCEPTION SHALL BE THROUGH INTERSECTIONS WHERE 2-4 FT SKIP LINES WILL BE PLACED.

21. TEMPORARY RAISED PAVEMENT MARKERS (RPM'S) SHALL BE INSTALLED ON THE EDGE, CENTER, AND LANE LINES OF ALL CROSSOVERS, TRANSITIONS, AND TANGENT SECTIONS WITHIN THE WORK ZONE WHERE THE VEHICLE PATHS ARE ALTERED. THE SPACING FOR THESE RPM'S SHALL BE 40 FT ON CENTERS FOR TANGENT SECTIONS AND 5 FT FOR TRANSITIONS, CURVES, AND CROSSOVERS. THE RPM'S SHALL EXTEND 100 FT ON THE TANGENT SECTION BEYOND EACH END OF THESE CROSSOVERS OR TRANSITION AREAS. COST OF THE TEMPORARY RPM'S SHALL BE INCLUDED IN PAY ITEM 102-78, TEMPORARY REFLECTIVE PAVEMENT MARKER.

SIGNALS:

22. CONTRACTOR SHALL NOTIFY MIAMI DADE COUNTY SIGNS AND SIGNALS DIVISION LOCATED AT 7100 N.W. 36TH STREET MIAMI, FLORIDA 33166 AND PHONE NO. (305) 592-3470, 48 HOURS PRIOR TO ANY MODIFICATION OF AN EXISTING TRAFFIC SIGNAL SYSTEM. THE CONTRACTOR SHALL HAVE FULL RESPONSIBILITY FOR THE MAINTENANCE OF THE EXISTING OR TEMPORARY TRAFFIC SIGNAL(S) WITHIN THE PROJECT LIMITS. COST OF RELOCATING TRAFFIC SIGNAL HEADS, PROVIDING AND REMOVING TEMPORARY SIGNALS, AND MAINTAINING THE EXISTING OR TEMPORARY TRAFFIC SIGNALS SHALL BE INCLUDED IN PAY ITEM 102-1, MAINTENANCE OF TRAFFIC.

23. THE CONTRACTOR SHALL MAINTAIN ONLINE COMMUNICATION OF EXISTING OR TEMPORARY SIGNALIZATION VIA INTERCONNECT OR PHONE LINE DURING CONSTRUCTION. CONTRACTORS SHALL PROVIDE TEMPORARY LINES AND CONNECTIONS IF NECESSARY. COST OF MAINTAINING COMMUNICATION, INCLUDING TEMPORARY LINES AND CONNECTIONS SHALL BE INCLUDED IN PAY ITEM 102-1, MAINTENANCE OF TRAFFIC.

WORK ZONE LIMITS:

24. THE LENGTH OF AN OPEN TRENCH SHALL NOT EXCEED 500 FT. PROPERTY ACCESS SHALL BE MAINTAINED IN ACCORDANCE TO ARTICLE 102-5.5 OF THE STANDARD SPECIFICATIONS FOR ROAD AND BRIDGE CONSTRUCTION.

25. ALL MILLED SURFACES SHALL BE PAVED PRIOR TO OPENING TO TRAFFIC.

INTERSECTIONS:

26. ADJACENT INTERSECTIONS SHALL NOT BE CONSTRUCTED SIMULTANEOUSLY UNLESS DIRECTED BY THE ENGINEER.

27. INTERSECTIONS SHALL BE RECONSTRUCTED WORKING ON A CONTINUOUS DAILY BASIS UNTIL COMPLETE AND UNTIL THE STRUCTURAL COURSE IS PLACED.

28. WORK AT MAJOR INTERSECTIONS SHALL BE DONE CONTINUOUSLY UNTIL THE ROAD HAS BEEN PAVED AND DROP OFFS SAFELY SLOPED. WORK HOURS AT THESE INTERSECTIONS SHALL BE FROM XX P.M. FRIDAY UNTIL XX A.M. THE FOLLOWING MONDAY AT WHICH TIME THE INTERSECTION SHALL BE REOPENED TO TRAFFIC. THE FOLLOWING ARE THE MAJOR INTERSECTIONS: TBD

29. M.O.T. TRANSITIONS AND TEMPORARY INTERSECTION CROSSOVERS WHERE CONSTRUCTION HAS CAUSED GRADE DIFFERENCES BETWEEN THE EXISTING AND NEW ROADWAYS SHALL BE CONSTRUCTED USING 1:20 TYPE SP ASPHALT CONCRETE SLOPED TO ACCOMMODATE VEHICULAR TRAFFIC FROM ANY DIRECTION. ALL MATERIAL, EQUIPMENT AND WORK, INCLUDING ITS REMOVAL, SHALL BE UNDER PAY ITEM 102-1, MAINTENANCE OF TRAFFIC.

PEDESTRIANS, BICYCLES, AND WHEELCHAIRS:

30. AT THE END OF EACH WORK DAY OR WHENEVER THE WORK ZONE BECOMES INACTIVE, ANY DROP OFF GREATER THAN 6 IN ADJACENT TO THE PEDESTRIAN, BICYCLE, AND WHEELCHAIR TRAVEL PATHS SHALL BE BACKFILLED FLUSH WITH THE SAID PATHS OR PROTECTED WITH TEMPORARY FENCE, CONCRETE BARRIER WALL OR APPROVED HANDRAIL. COST SHALL BE INCLUDED IN PAY ITEM 102-1, MAINTENANCE OF TRAFFIC.

SUBJECT TO CHANGE

W.L.L. Designed by	05-06 Date					
J.N. / T.W. Drawn by	05-06 Date					
C.V. Checked by	05-02-06 Date					
T.B. Approved by	05-05-06 Date	No.	Date	By / Chk	App.	Revisions

NORTH CORRIDOR METRORAIL EXTENSION - PRELIMINARY ENGINEERING (100% SUBMITTAL)

MIAMI-DADE COUNTY — MIAMI-DADE TRANSIT

PARSONS
7600 CORPORATE CENTER DRIVE, SUITE 500
MIAMI, FLORIDA 33126
PHONE: (786) 464-1000 FAX: (786) 845-7119
CERTIFICATE OF AUTHORIZATION NO. 1838
Approved ----- Date -----

BND
CIVIL ENGINEERING • ENVIRONMENTAL • AIRPORT • CONSTRUCTION MANAGEMENT • TRANSPORTATION
1200 NW 78 AVENUE, SUITE 400
MIAMI, FLORIDA 33126 - (305) 599-8495
Approved T. BUDALL, P.E. Date -----

ROADWAY - TRAFFIC CONTROL PLANS

TRAFFIC CONTROL GENERAL NOTES

Scale N.T.S. | Drawing TCP-01 | Sheet 459

TRAFFIC CONTROL GENERAL NOTES CONT.

ADVANCE CONSTRUCTION NOTICE:

31. THE CONTRACTOR SHALL FURNISH AND MAINTAIN VARIABLE MESSAGE SIGNS AT LOCATIONS SHOWN ON THE PLANS. MESSAGES FOR THE VMS SHALL BE AS INDICATED ON THE PLANS OR AS DIRECTED BY THE ENGINEER. THE VMS SHALL BE IN PLACE ONE WEEK BEFORE THE START OF ANY WORK ITEMS AFFECTING THE EXISTING VEHICULAR AND PEDESTRIAN TRAFFIC. VMS INSTALLATION, OPERATION, AND REMOVAL BEFORE CONSTRUCTION BEGINS SHALL BE PAID UNDER PAY ITEM 102-1, MAINTENANCE OF TRAFFIC. VMS INSTALLATION, OPERATION, AND REMOVAL DURING CONSTRUCTION SHALL BE PAID UNDER PAY ITEM 102-99, VARIABLE MESSAGE SIGN.

LIGHTING:

32. THE CONTRACTOR SHALL MAINTAIN THE EXISTING LIGHTING SYSTEM UNTIL THE PROPOSED LIGHTING SYSTEM IS IN SERVICE. THIS WILL INCLUDE BUT NOT BE LIMITED TO ROUTINE MAINTENANCE OF AND REPLACEMENTS RESULTING FROM ANY DAMAGE BY THE CONTRACTOR OR HIS SUBCONTRACTORS TO LUMINARIES, FUSES, BALLAST, POLES, BASES, OR ANY INCIDENTAL PARTS. COST TO BE INCLUDED IN PAY ITEM 102-1, MAINTENANCE OF TRAFFIC.

33. THE CONTRACTOR SHALL INSTALL THE PROPOSE LIGHTING SYSTEM, INCLUDING CONDUIT, PULL BOXES, AND SERVICE CONNECTIONS AND HAVE THE SYSTEM IN OPERATION BEFORE TAKING THE EXISTING LIGHTING SYSTEM OUT OF SERVICE. COST TO MAINTAIN THE PROPOSED LIGHTING SYSTEM IN SERVICE PRIOR TO FINAL ACCEPTANCE SHALL BE INCLUDED IN PAY ITEM 102-1, MAINTENANCE OF TRAFFIC.

34. THE CONTRACTOR SHALL INSTALL A TEMPORARY LIGHTING SYSTEM AS SHOWN IN THE PLANS BEFORE TAKING THE EXISTING SYSTEM OUT OF SERVICE. IN PAY ITEM 102-1, MAINTENANCE OF TRAFFIC. THE COST OF THE TEMPORARY LIGHTING SHALL BE INCLUDED

RAILROAD:

35. RAILROAD CROSSING(S) IN CLOSE PROXIMITY TO THIS PROJECT OCCUR(S) AT FLORIDA EAST COAST RAILWAY CROSSING AND CSX TRANSPORTATION CROSSING. WHERE WORK AREAS ARE IN CLOSE PROXIMITY TO A CROSSING, TRAFFIC CONTROL PROVISIONS SHALL BE ESTABLISHED TO AVOID ALL INTERFERENCE WITH, OR IMPEDIMENT OF VEHICLES EXITING THE CROSSING. IT SHALL BE THE CONTRACTOR'S RESPONSIBILITY TO MAINTAIN THE RAILROAD PREEMPTION LINK TO THE ADJACENT INTERSECTION TRAFFIC SIGNALS.

    THIS REQUIREMENT APPLIES TO WORK ZONES, APPROACHES, AND EXITS THEREFROM AND SUPERSEDES STANDARD INDEX NO. 601 THROUGH 660 WHERE NECESSARY. ALL LANE REDUCTIONS, WHICH MAY INCLUDE BUT ARE NOT LIMITED TO LANE SHIFTS, LANE CLOSURES, AND/OR MERGE AREAS, NEEDED FOR THE MAINTENANCE OF TRAFFIC AND WHICH ARE IN CLOSE PROXIMITY TO THE CROSSING, SHALL OCCUR PRIOR TO THE CROSSING. IT SHALL BE THE RESPONSIBILITY OF THE CONTRACTOR TO ENSURE THAT ALL TRAFFIC WILL BE IN ITS ASSIGNED LANE(S) BEFORE THE CROSSING. COSTS TO MEET THESE REQUIREMENTS SHALL BE INCLUDED IN PAY ITEM 102-1, MAINTENANCE OF TRAFFIC.

36. WHEN WORK, EQUIPMENT, OR MATERIAL MOVEMENT REQUIRES INTERMITTENT TRAFFIC STOPPAGE, THE CONTRACTOR SHALL PROVIDE QUALIFIED CONSTRUCTION FLAGGER(S) TO HOLD TRAFFIC BEFORE THEIR QUEUING ONTO THE RAILROAD CROSSINGS(S). IF TIME OF DAY OR VOLUMES ARE SUCH THAT THE QUEUING OF VEHICLES ACROSS THE RAILROAD CROSSING CAN NOT BE AVOIDED, A LAW ENFORCEMENT OFFICER SHALL BE PROVIDED AT THE CROSSING TO PREVENT VEHICLES FROM STOPPING ON THE RAILROAD TRACKS, EVEN IF AUTOMATIC OR OTHER WARNING DEVICES ARE IN PLACE. COST OF LAW ENFORCEMENT OFFICER SHALL BE INCLUDED IN PAY ITEM 102-13 TRAFFIC CONTROL OFFICER.

SUBJECT TO CHANGE

W.L.L. Designed by	05-06 Date					
J.N. / T.W. Drawn by	05-06 Date					
C.V. Checked by	05-02-06 Date					
T.B. Approved by	05-05-06 Date	No.	Date	By / Chk	App.	Revisions

NORTH CORRIDOR METRORAIL EXTENSION - PRELIMINARY ENGINEERING (100% SUBMITTAL)

ROADWAY - TRAFFIC CONTROL PLANS

MIAMI-DADE COUNTY

MIAMI-DADE TRANSIT

PARSONS
7600 CORPORATE CENTER DRIVE, SUITE 500
MIAMI, FLORIDA 33126
PHONE: (786) 464-1000 FAX: (786) 845-7119
CERTIFICATE OF AUTHORIZATION NO. 1838

Approved ----- Date -----

BND
CIVIL ENGINEERING • ENVIRONMENTAL • AIRPORT • CONSTRUCTION MANAGEMENT • TRANSPORTATION
1200 NW 78 AVENUE, SUITE 400
MIAMI, FLORIDA 33126 - (305) 599-8495

Approved T. BUDALL, P.E. Date -----

TRAFFIC CONTROL GENERAL NOTES

Scale N.T.S. Drawing TCP-02 Sheet 460

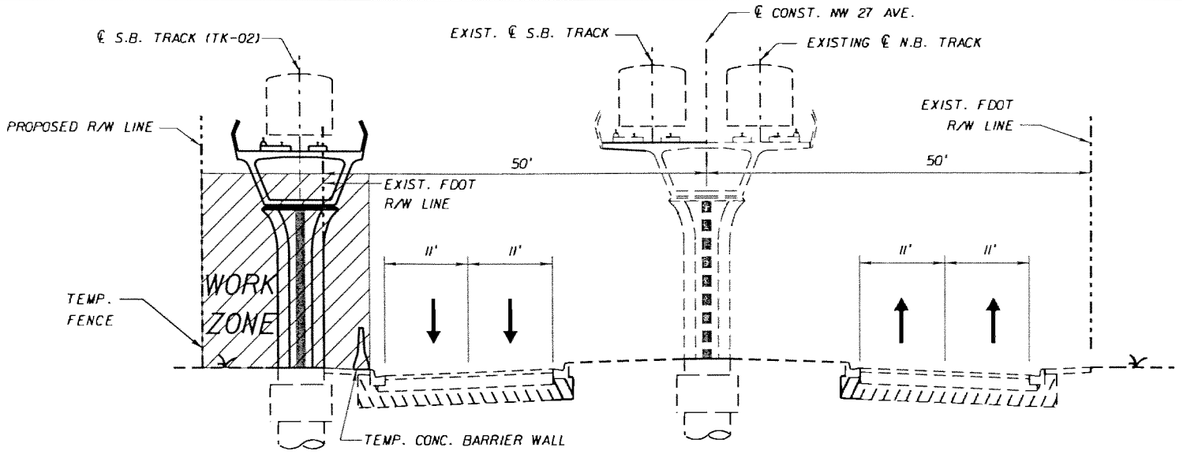

PHASE I

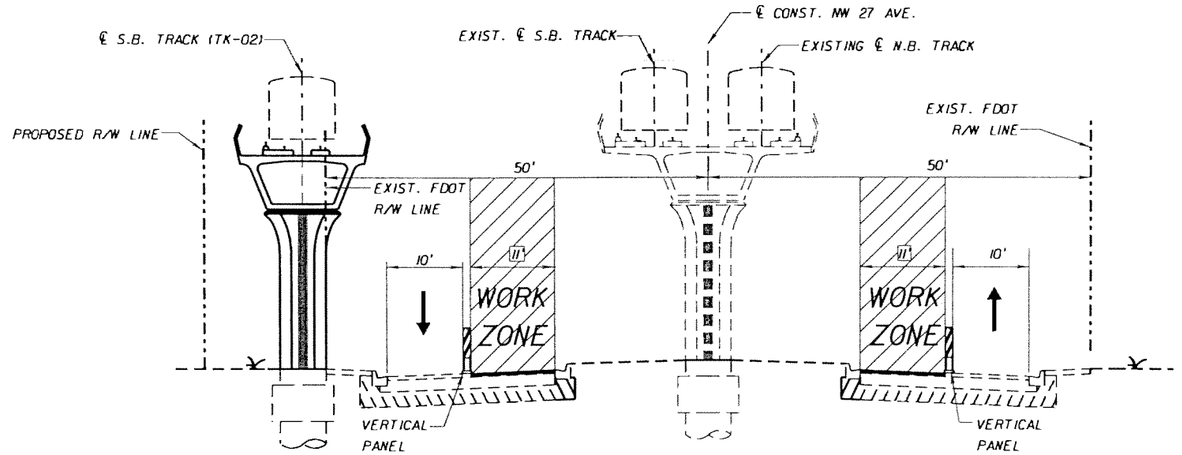

PHASE II

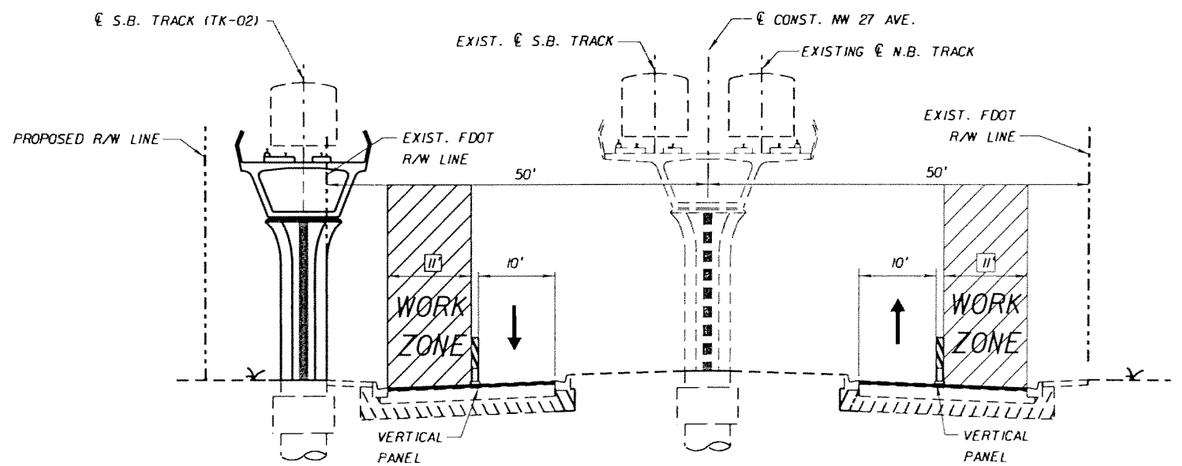

PHASE III

* = SR 9 / NW 27TH AVENUE
STA. 121+80.00 TO STA. 140+80.00

PHASE I *

1. PLACE TEMPORARY SIGNS, BARRICADES, CONCRETE BARRIER WALL AND PAVEMENT MARKINGS IN ACCORDANCE WITH THE PROJECT PLANS, THE CURRENT EDITION OF THE FLORIDA DOT DESIGN STANDARDS (600 SERIES), THE STANDARD SPECIFICATIONS FOR ROAD AND BRIDGE CONSTRUCTION, AND THE M.U.T.C.D. AS MINIMUM CRITERIA.
2. CLEAR AND GRUB.
3. CONSTRUCT METRORAIL COLUMN.

PHASE II *

1. REMOVE TEMPORARY CONCRETE BARRIER WALL AND PLACE TEMPORARY SIGNS, BARRICADES, AND PAVEMENT MARKINGS IN ACCORDANCE WITH THE PROJECT PLANS, THE CURRENT EDITION OF THE FLORIDA DOT DESIGN STANDARDS (600 SERIES), THE STANDARD SPECIFICATIONS FOR ROAD AND BRIDGE CONSTRUCTION, AND THE M.U.T.C.D. AS MINIMUM CRITERIA.
2. CLEAR AND GRUB.
3. MILL AND RESURFACE INSIDE LANE

PHASE III *

1. PLACE TEMPORARY SIGNS, BARRICADES, AND PAVEMENT MARKINGS IN ACCORDANCE WITH THE PROJECT PLANS, THE CURRENT EDITION OF THE FLORIDA DOT DESIGN STANDARDS (600 SERIES), THE STANDARD SPECIFICATIONS FOR ROAD AND BRIDGE CONSTRUCTION, AND THE M.U.T.C.D. AS MINIMUM CRITERIA.
2. CLEAR AND GRUB.
3. MILL AND RESURFACE OUTSIDE LANE

PHASE IV *

1. PLACE TEMPORARY SIGNS, BARRICADES, AND PAVEMENT MARKINGS IN ACCORDANCE WITH THE PROJECT PLANS, THE CURRENT EDITION OF THE FLORIDA DOT DESIGN STANDARDS (600 SERIES), THE STANDARD SPECIFICATIONS FOR ROAD AND BRIDGE CONSTRUCTION, AND THE M.U.T.C.D. AS MINIMUM CRITERIA.
2. APPLY FRICTION COURSE, PAVEMENT MARKINGS AND RPM'S IN ACCORDANCE WITH THE SIGNING AND PAVEMENT MARKING PLANS, THE CURRENT EDITION OF THE FLORIDA DOT DESIGN STANDARDS, THE STANDARD SPECIFICATIONS FOR ROAD AND BRIDGE CONSTRUCTION, AND THE M.U.T.C.D. AS MINIMUM CRITERIA.

SUBJECT TO CHANGE

W.L.L. Designed by	05-06 Date					
J.N. / T.W. Drawn by	05-06 Date					
C.V. Checked by	05-02-06 Date					
M.A.B. Approved by	05-05-06 Date	No.	Date	By / Chk	App.	Revisions

NORTH CORRIDOR METRORAIL EXTENSION - PRELIMINARY ENGINEERING (100% SUBMITTAL)

MIAMI-DADE COUNTY — MIAMI-DADE TRANSIT

PARSONS
7600 CORPORATE CENTER DRIVE, SUITE 500
MIAMI, FLORIDA 33126
PHONE: (786) 464-1000 FAX: (786) 845-7119
CERTIFICATE OF AUTHORIZATION NO. 1838
Approved | Date

BND
CIVIL ENGINEERING • ENVIRONMENTAL • AIRPORT • CONSTRUCTION MANAGEMENT • TRANSPORTATION
1200 NW 78 AVENUE, SUITE 400
MIAMI, FLORIDA 33126 - (305) 599-8495
Approved MICHAEL A. BUDALL, P.E. | Date

ROADWAY - TRAFFIC CONTROL PLANS

TRAFFIC CONTROL PRELIMINARY PHASING

Scale N.T.S. | Drawing TCP-03 | Sheet

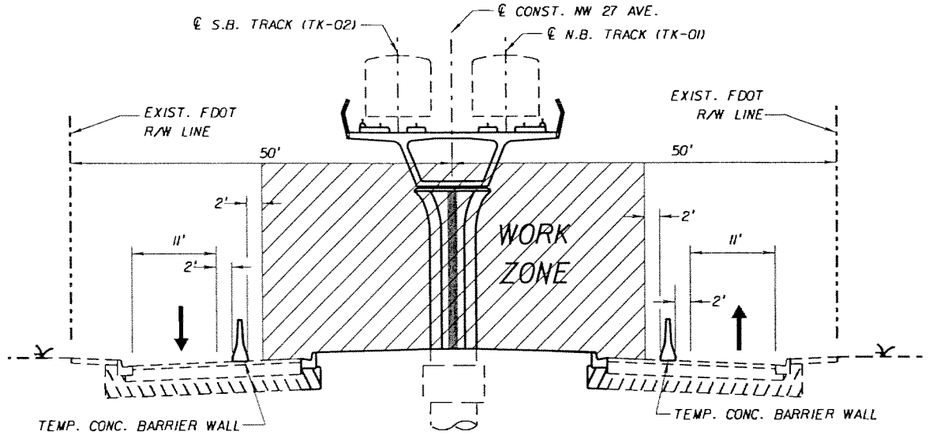

PHASE I

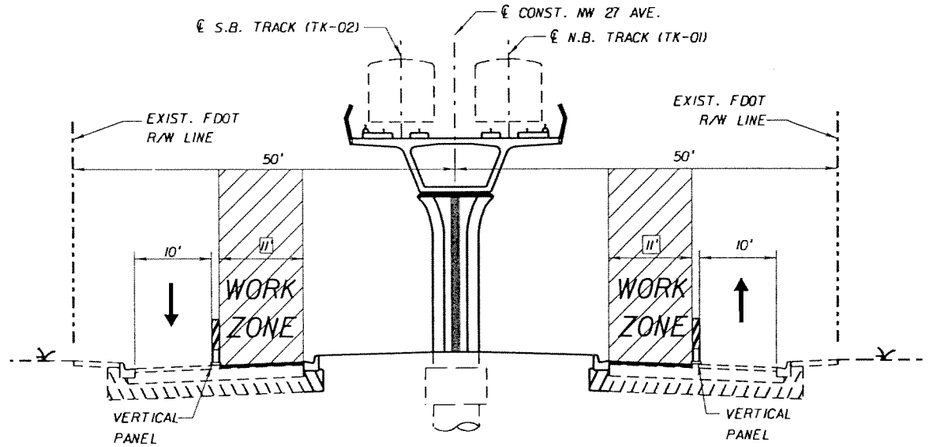

PHASE II

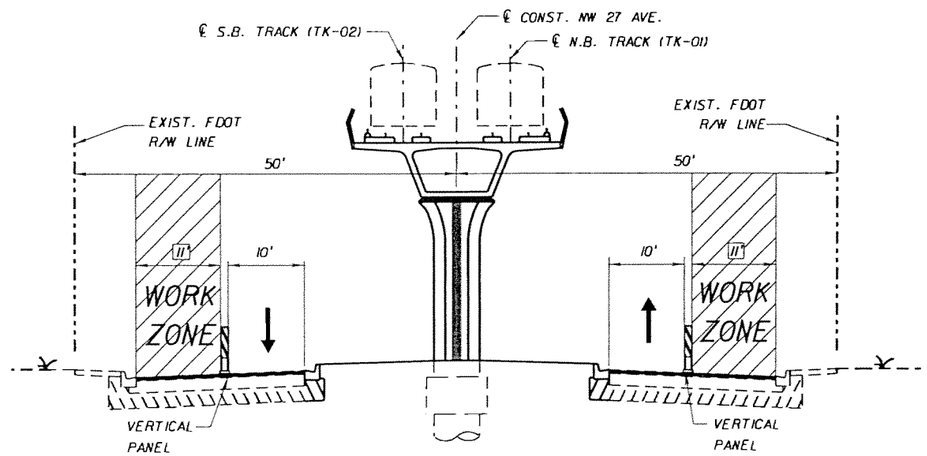

PHASE III

* = SR 9 / NW 27TH AVENUE
STA. 121+80.00 TO STA. 140+80.00

PHASE I *

1. PLACE TEMPORARY SIGNS, BARRICADES, CONCRETE BARRIER WALL AND PAVEMENT MARKINGS IN ACCORDANCE WITH THE PROJECT PLANS, THE CURRENT EDITION OF THE FLORIDA DOT DESIGN STANDARDS (600 SERIES), THE STANDARD SPECIFICATIONS FOR ROAD AND BRIDGE CONSTRUCTION, AND THE M.U.T.C.D. AS MINIMUM CRITERIA.
2. CLEAR AND GRUB.
3. REMOVE EXISTING MEDIAN AND ASPHALT.
4. CONSTRUCT METRORAIL COLUMN.
5. CONSTRUCT NEW MEDIAN, CURB AND GUTTER TYPE "F"

PHASE II *

1. REMOVE TEMPORARY CONCRETE BARRIER WALL AND PLACE TEMPORARY SIGNS, BARRICADES, AND PAVEMENT MARKINGS IN ACCORDANCE WITH THE PROJECT PLANS, THE CURRENT EDITION OF THE FLORIDA DOT DESIGN STANDARDS (600 SERIES), THE STANDARD SPECIFICATIONS FOR ROAD AND BRIDGE CONSTRUCTION, AND THE M.U.T.C.D. AS MINIMUM CRITERIA.
2. CLEAR AND GRUB.
3. MILL AND RESURFACE INSIDE LANE

PHASE III *

1. PLACE TEMPORARY SIGNS, BARRICADES, AND PAVEMENT MARKINGS IN ACCORDANCE WITH THE PROJECT PLANS, THE CURRENT EDITION OF THE FLORIDA DOT DESIGN STANDARDS (600 SERIES), THE STANDARD SPECIFICATIONS FOR ROAD AND BRIDGE CONSTRUCTION, AND THE M.U.T.C.D. AS MINIMUM CRITERIA.
2. CLEAR AND GRUB.
3. MILL AND RESURFACE OUTSIDE LANE

PHASE IV *

1. PLACE TEMPORARY SIGNS, BARRICADES, AND PAVEMENT MARKINGS IN ACCORDANCE WITH THE PROJECT PLANS, THE CURRENT EDITION OF THE FLORIDA DOT DESIGN STANDARDS (600 SERIES), THE STANDARD SPECIFICATIONS FOR ROAD AND BRIDGE CONSTRUCTION, AND THE M.U.T.C.D. AS MINIMUM CRITERIA.
2. APPLY FRICTION COURSE, PAVEMENT MARKINGS AND RPM'S IN ACCORDANCE WITH THE SIGNING AND PAVEMENT MARKING PLANS, THE CURRENT EDITION OF THE FLORIDA DOT DESIGN STANDARDS, THE STANDARD SPECIFICATIONS FOR ROAD AND BRIDGE CONSTRUCTION, AND THE M.U.T.C.D. AS MINIMUM CRITERIA.

SUBJECT TO CHANGE

W.L.L. Designed by	05-06 Date					
J.N. / T.W. Drawn by	05-06 Date					
C.V. Checked by	05-02-06 Date					
M.A.B. Approved by	05-05-06 Date	No.	Date	By / Chk	App.	Revisions

NORTH CORRIDOR METRORAIL EXTENSION - PRELIMINARY ENGINEERING (100% SUBMITTAL)

MIAMI-DADE COUNTY — MIAMI-DADE TRANSIT

PARSONS
7600 CORPORATE CENTER DRIVE, SUITE 500
MIAMI, FLORIDA 33126
PHONE: (786) 464-1000 FAX: (786) 845-7119
CERTIFICATE OF AUTHORIZATION NO. 1638
Approved Date

BND
CIVIL ENGINEERING • ENVIRONMENTAL • AIRPORT • CONSTRUCTION MANAGEMENT • TRANSPORTATION
1200 NW 78 AVENUE, SUITE 400
MIAMI, FLORIDA 33126 - (305) 599-8495
Approved MICHAEL A. BUDALL, P.E. Date

ROADWAY - TRAFFIC CONTROL PLANS

TRAFFIC CONTROL PRELIMINARY PHASING

Scale N.T.S. | Drawing TCP-04 | Sheet 4 of 7

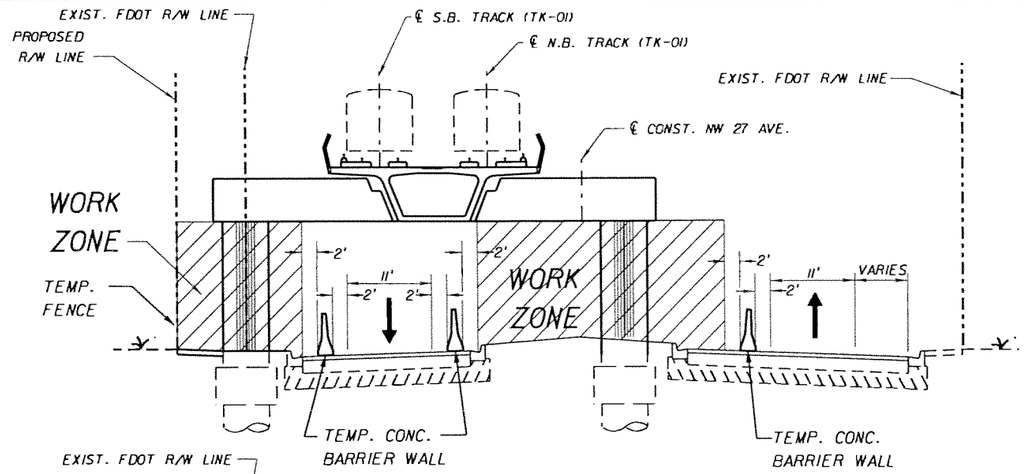

PHASE I

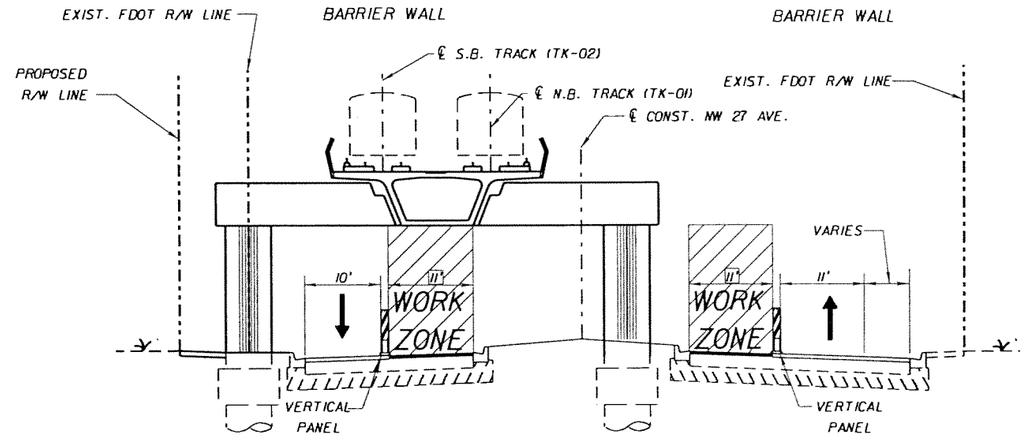

PHASE II

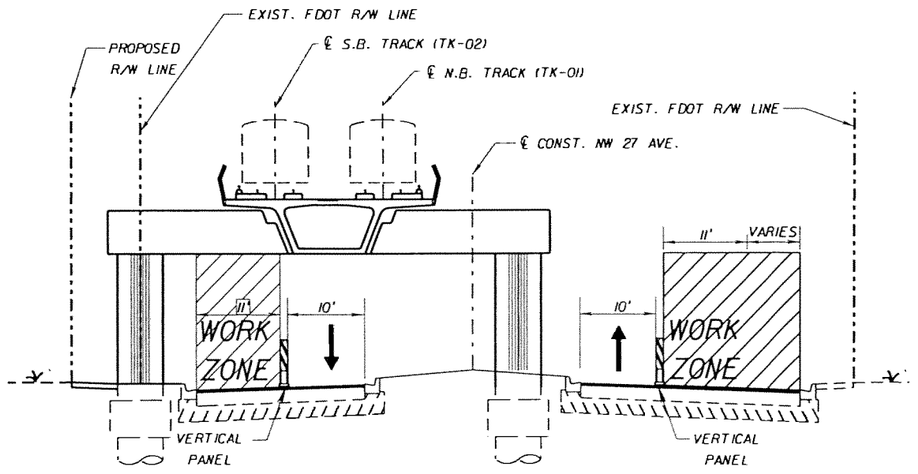

PHASE III

* = SR 9 / NW 27TH AVENUE
STA. 140+80.00 TO STA. 142+15.00

PHASE I *

1. PLACE TEMPORARY SIGNS, BARRICADES, CONCRETE BARRIER WALL, FENCE AND PAVEMENT MARKINGS IN ACCORDANCE WITH THE PROJECT PLANS, THE CURRENT EDITION OF THE FLORIDA DOT DESIGN STANDARDS (600 SERIES), THE STANDARD SPECIFICATIONS FOR ROAD AND BRIDGE CONSTRUCTION, AND THE M.U.T.C.D. AS MINIMUM CRITERIA.
2. CLEAR AND GRUB.
3. REMOVE EXISTING MEDIAN AND ASPHALT.
4. CONSTRUCT METRORAIL COLUMN.
5. CONSTRUCT NEW MEDIAN, CURB, SIDEWALK AND GUTTER TYPE "F".

PHASE II *

1. REMOVE TEMPORARY CONCRETE BARRIER WALL AND PLACE TEMPORARY SIGNS, BARRICADES, AND PAVEMENT MARKINGS IN ACCORDANCE WITH THE PROJECT PLANS, THE CURRENT EDITION OF THE FLORIDA DOT DESIGN STANDARDS (600 SERIES), THE STANDARD SPECIFICATIONS FOR ROAD AND BRIDGE CONSTRUCTION, AND THE M.U.T.C.D. AS MINIMUM CRITERIA.
2. CLEAR AND GRUB.
3. MILL AND RESURFACE INSIDE LANE.

PHASE III *

1. PLACE TEMPORARY SIGNS, BARRICADES, AND PAVEMENT MARKINGS IN ACCORDANCE WITH THE PROJECT PLANS, THE CURRENT EDITION OF THE FLORIDA DOT DESIGN STANDARDS (600 SERIES), THE STANDARD SPECIFICATIONS FOR ROAD AND BRIDGE CONSTRUCTION, AND THE M.U.T.C.D. AS MINIMUM CRITERIA.
2. CLEAR AND GRUB.
3. MILL AND RESURFACE OUTSIDE LANE.

PHASE IV *

1. PLACE TEMPORARY SIGNS, BARRICADES, AND PAVEMENT MARKINGS IN ACCORDANCE WITH THE PROJECT PLANS, THE CURRENT EDITION OF THE FLORIDA DOT DESIGN STANDARDS (600 SERIES), THE STANDARD SPECIFICATIONS FOR ROAD AND BRIDGE CONSTRUCTION, AND THE M.U.T.C.D. AS MINIMUM CRITERIA.
2. APPLY FRICTION COURSE, PAVEMENT MARKINGS AND RPM'S IN ACCORDANCE WITH THE SIGNING AND PAVEMENT MARKING PLANS, THE CURRENT EDITION OF THE FLORIDA DOT DESIGN STANDARDS, THE STANDARD SPECIFICATIONS FOR ROAD AND BRIDGE CONSTRUCTION, AND THE M.U.T.C.D. AS MINIMUM CRITERIA.

SUBJECT TO CHANGE

W.L.L. Designed by	05-06 Date					
J.N. / T.W. Drawn by	05-06 Date					
C.V. Checked by	05-02-06 Date					
M.A.B. Approved by	05-05-06 Date	No.	Date	By / Chk	App.	Revisions

NORTH CORRIDOR METRORAIL EXTENSION - PRELIMINARY ENGINEERING (100% SUBMITTAL)

MIAMI-DADE COUNTY — MIAMI-DADE TRANSIT

PARSONS
7600 CORPORATE CENTER DRIVE, SUITE 500
MIAMI, FLORIDA 33126
PHONE: (786) 464-1000 FAX: (786) 845-7119
CERTIFICATE OF AUTHORIZATION NO. 1638
Approved ____ Date ____

BND
CIVIL ENGINEERING • ENVIRONMENTAL • AIRPORT • CONSTRUCTION MANAGEMENT • TRANSPORTATION
1200 NW 78 AVENUE, SUITE 400
MIAMI, FLORIDA 33126 - (305) 599-8495
Approved MICHAEL A. BUDALL, P.E. Date ____

ROADWAY - TRAFFIC CONTROL PLANS

TRAFFIC CONTROL PRELIMINARY PHASING

Scale N.T.S. | Drawing TCP-05 | Sheet 46

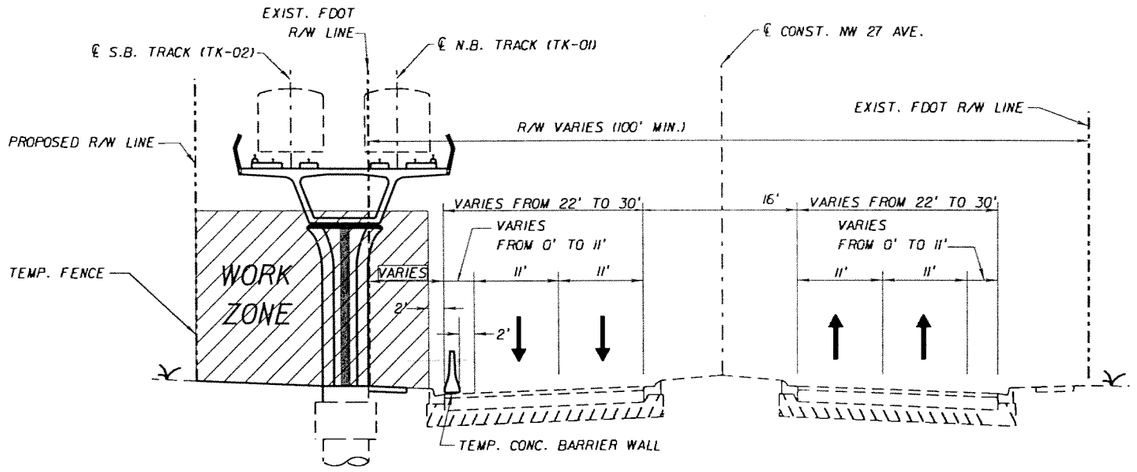

PHASE 1 (STA. 142+15.00 TO STA. 167+80.00)

1. PLACE TEMPORARY SIGNS, BARRICADES, CONCRETE BARRIER WALL, FENCE AND PAVEMENT MARKINGS IN ACCORDANCE WITH THE PROJECT PLANS, THE CURRENT EDITION OF THE FLORIDA DOT DESIGN STANDARDS (600 SERIES), THE STANDARD SPECIFICATIONS FOR ROAD AND BRIDGE CONSTRUCTION, AND THE M.U.T.C.D. AS MINIMUM CRITERIA.
2. CLEAR AND GRUB.
3. CONSTRUCT METRORAIL COLUMN.
4. CONSTRUCT NEW SIDEWALK.

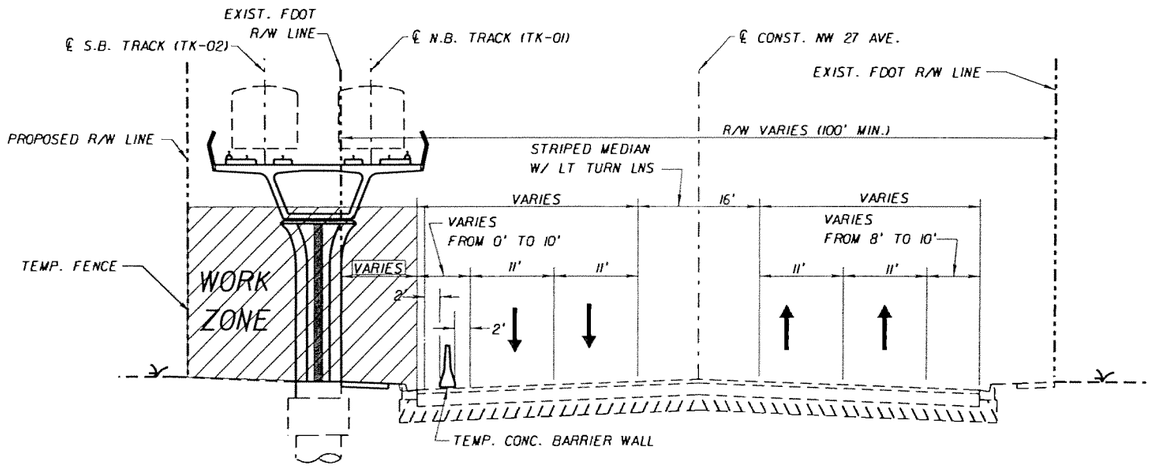

PHASE 1 (STA. 167+80.00 TO STA. 170+50.00)

1. PLACE TEMPORARY SIGNS, BARRICADES, CONCRETE BARRIER WALL, FENCE AND PAVEMENT MARKINGS IN ACCORDANCE WITH THE PROJECT PLANS, THE CURRENT EDITION OF THE FLORIDA DOT DESIGN STANDARDS (600 SERIES), THE STANDARD SPECIFICATIONS FOR ROAD AND BRIDGE CONSTRUCTION, AND THE M.U.T.C.D. AS MINIMUM CRITERIA.
2. CLEAR AND GRUB.
3. CONSTRUCT METRORAIL COLUMN.
4. CONSTRUCT NEW SIDEWALK.

SUBJECT TO CHANGE

W.L.L. Designed by	05-06 Date					
J.N. / T.W. Drawn by	05-06 Date					
C.V. Checked by	05-02-06 Date					
M.A.B. Approved by	05-05-06 Date	No.	Date	By / Chk	App.	Revisions

NORTH CORRIDOR METRORAIL EXTENSION - PRELIMINARY ENGINEERING (100% SUBMITTAL)

MIAMI-DADE COUNTY — MIAMI-DADE TRANSIT

PARSONS
7600 CORPORATE CENTER DRIVE, SUITE 500
MIAMI, FLORIDA 33126
PHONE: (786) 464-1000 FAX: (786) 845-7119
CERTIFICATE OF AUTHORIZATION NO. 1836
Approved Date

BND
CIVIL ENGINEERING · ENVIRONMENTAL · AIRPORT · CONSTRUCTION MANAGEMENT · TRANSPORTATION
1200 NW 78 AVENUE, SUITE 400
MIAMI, FLORIDA 33126 · (305) 599-8495
Approved MICHAEL A. BUDALL, P.E. Date

ROADWAY - TRAFFIC CONTROL PLANS

TRAFFIC CONTROL PRELIMINARY PHASING

Scale N.T.S. | Drawing TCP-06 | Sheet 22 of 22

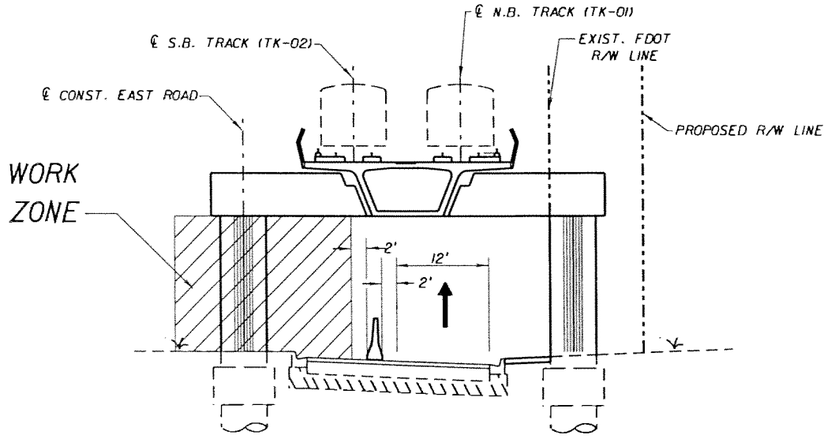

PHASE I

PHASE I *

1. PLACE TEMPORARY SIGNS, BARRICADES, CONCRETE BARRIER WALL, FENCE AND PAVEMENT MARKINGS IN ACCORDANCE WITH THE PROJECT PLANS, THE CURRENT EDITION OF THE FLORIDA DOT DESIGN STANDARDS (600 SERIES), THE STANDARD SPECIFICATIONS FOR ROAD AND BRIDGE CONSTRUCTION, AND THE M.U.T.C.D. AS MINIMUM CRITERIA.
2. CLEAR AND GRUB.
3. REMOVE EXISTING MEDIAN AND ASPHALT.
4. CONSTRUCT METRORAIL COLUMN.
5. CONSTRUCT NEW MEDIAN, CURB, SIDEWALK AND GUTTER TYPE "F".

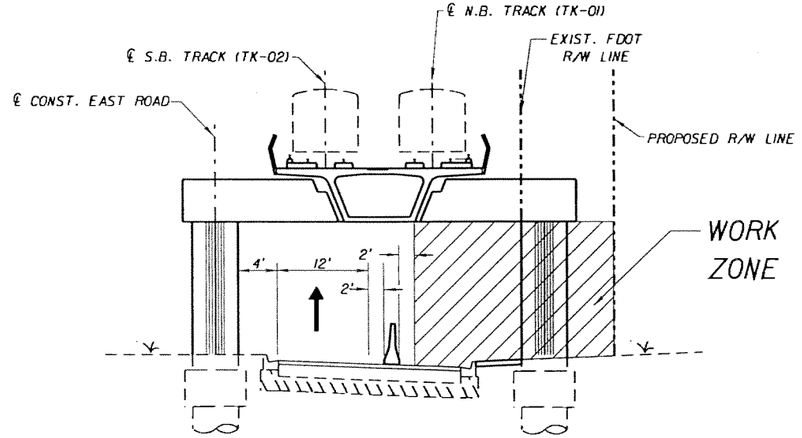

PHASE II

PHASE II *

1. REMOVE TEMPORARY CONCRETE BARRIER WALL AND PLACE TEMPORARY SIGNS, BARRICADES, AND PAVEMENT MARKINGS IN ACCORDANCE WITH THE PROJECT PLANS, THE CURRENT EDITION OF THE FLORIDA DOT DESIGN STANDARDS (600 SERIES), THE STANDARD SPECIFICATIONS FOR ROAD AND BRIDGE CONSTRUCTION, AND THE M.U.T.C.D. AS MINIMUM CRITERIA.
2. CLEAR AND GRUB.
3. MILL AND RESURFACE INSIDE LANE.

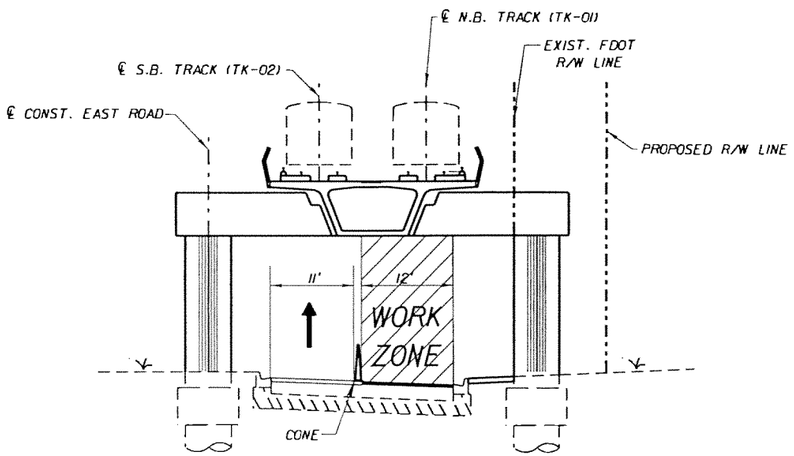

PHASE III

PHASE III *

1. PLACE TEMPORARY SIGNS, BARRICADES, AND PAVEMENT MARKINGS IN ACCORDANCE WITH THE PROJECT PLANS, THE CURRENT EDITION OF THE FLORIDA DOT DESIGN STANDARDS (600 SERIES), THE STANDARD SPECIFICATIONS FOR ROAD AND BRIDGE CONSTRUCTION, AND THE M.U.T.C.D. AS MINIMUM CRITERIA.
2. CLEAR AND GRUB.
3. MILL AND RESURFACE OUTSIDE LANE.

* = EAST ROAD (MDC North Campus)
STA. 223+25.00 TO STA. 225+96.00
SR 9 / NW 27TH AVENUE (NORTHBOUND)
STA. 324+14.00 TO 325+45.00

SUBJECT TO CHANGE

W.L.L. 05-06 Designed by Date						
J.N. / T.W. 05-06 Drawn by Date						
C.V. 05-02-06 Checked by Date						
M.A.B. 05-05-06 Approved by Date	No.	Date	By / Chk	App.	Revisions	

NORTH CORRIDOR METRORAIL EXTENSION - PRELIMINARY ENGINEERING (100% SUBMITTAL)

MIAMI-DADE COUNTY — MIAMI-DADE TRANSIT

PARSONS
7600 CORPORATE CENTER DRIVE, SUITE 500
MIAMI, FLORIDA 33126
PHONE: (786) 464-1000 FAX: (786) 845-7119
CERTIFICATE OF AUTHORIZATION NO. 1836
Approved Date

BND
CIVIL ENGINEERING • ENVIRONMENTAL • AIRPORT • CONSTRUCTION MANAGEMENT • TRANSPORTATION
1200 NW 78 AVENUE, SUITE 400
MIAMI, FLORIDA 33126 - (305) 599-8495
Approved MICHAEL A. BUDALL, P.E. Date

ROADWAY - TRAFFIC CONTROL PLANS

TRAFFIC CONTROL PRELIMINARY PHASING

Scale N.T.S. Drawing TCP-07 Sheet

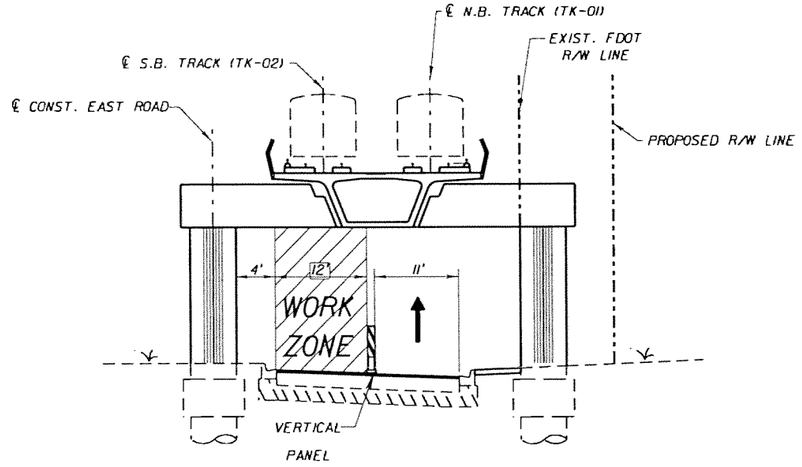

PHASE IV

PHASE IV *

1. PLACE TEMPORARY SIGNS, BARRICADES, AND PAVEMENT MARKINGS IN ACCORDANCE WITH THE PROJECT PLANS, THE CURRENT EDITION OF THE FLORIDA DOT DESIGN STANDARDS (600 SERIES), THE STANDARD SPECIFICATIONS FOR ROAD AND BRIDGE CONSTRUCTION, AND THE M.U.T.C.D. AS MINIMUM CRITERIA.
2. CLEAR AND GRUB.
3. MILL AND RESURFACE OUTSIDE LANE.

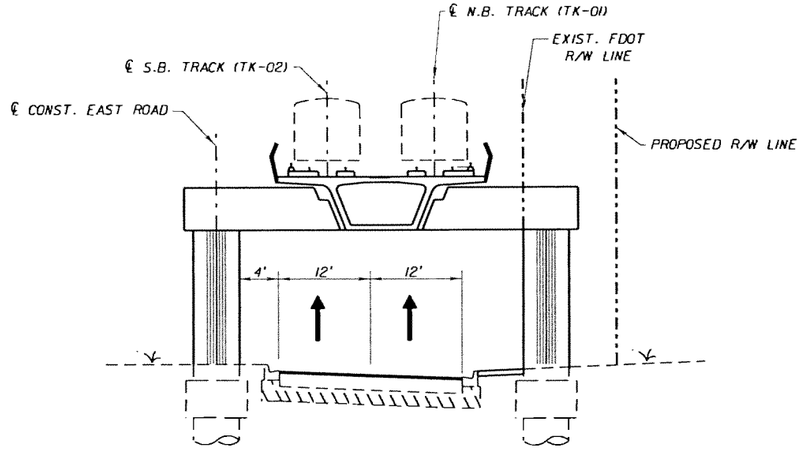

PHASE V

PHASE V *

1. PLACE TEMPORARY SIGNS, BARRICADES, AND PAVEMENT MARKINGS IN ACCORDANCE WITH THE PROJECT PLANS, THE CURRENT EDITION OF THE FLORIDA DOT DESIGN STANDARDS (600 SERIES), THE STANDARD SPECIFICATIONS FOR ROAD AND BRIDGE CONSTRUCTION, AND THE M.U.T.C.D. AS MINIMUM CRITERIA.
2. APPLY FRICTION COURSE, PAVEMENT MARKINGS AND RPM'S IN ACCORDANCE WITH THE SIGNING AND PAVEMENT MARKING PLANS, THE CURRENT EDITION OF THE FLORIDA DOT DESIGN STANDARDS, THE STANDARD SPECIFICATIONS FOR ROAD AND BRIDGE CONSTRUCTION, AND THE M.U.T.C.D. AS MINIMUM CRITERIA.

* = EAST ROAD (MDC North Campus)
STA. 223+25.00 TO STA. 225+96.00
SR 9 / NW 27TH AVENUE (NORTHBOUND)
STA. 324+14.00 TO 325+45.00

SUBJECT TO CHANGE

W.L.L. Designed by	05-06 Date						
J.N. / T.W. Drawn by	05-06 Date						
C.V. Checked by	05-02-06 Date						
M.A.B. Approved by	05-05-06 Date	No.	Date	By / Chk	App.	Revisions	

NORTH CORRIDOR METRORAIL EXTENSION - PRELIMINARY ENGINEERING (100% SUBMITTAL)

ROADWAY - TRAFFIC CONTROL PLANS

MIAMI-DADE COUNTY

MIAMI-DADE TRANSIT

PARSONS
7600 CORPORATE CENTER DRIVE, SUITE 500
MIAMI, FLORIDA 33126
PHONE: (786) 464-1000 FAX: (786) 845-7119
CERTIFICATE OF AUTHORIZATION NO. 1836

Approved ____ Date ____

BND
CIVIL ENGINEERING • ENVIRONMENTAL • AIRPORT • CONSTRUCTION MANAGEMENT • TRANSPORTATION
1200 NW 78 AVENUE, SUITE 400
MIAMI, FLORIDA 33126 - (305) 599-8495

Approved MICHAEL A. BUDALL, P.E. Date ____

TRAFFIC CONTROL PRELIMINARY PHASING

Scale N.T.S. | Drawing TCP-08 | Sheet

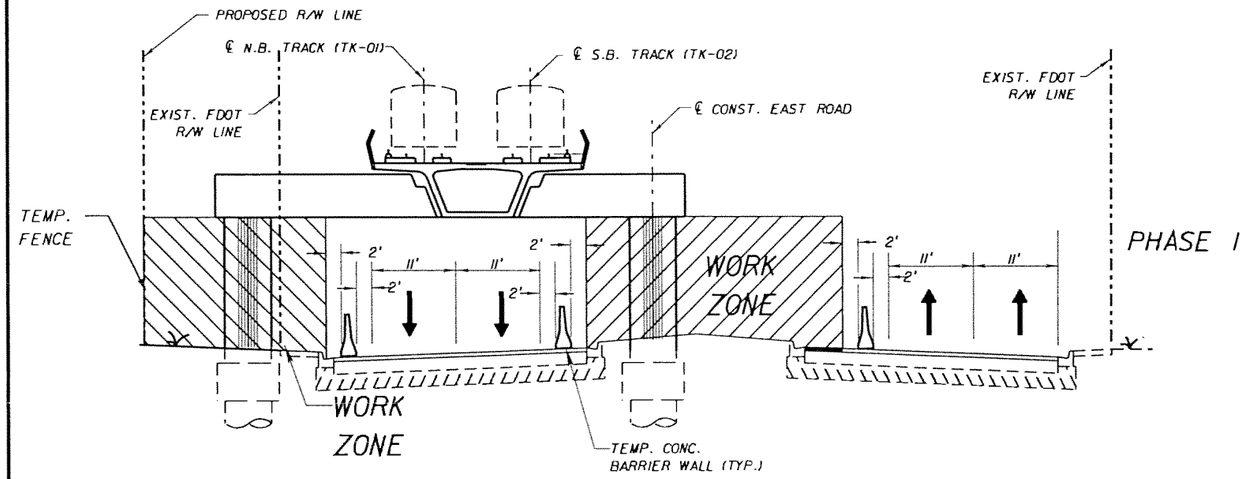

PHASE I

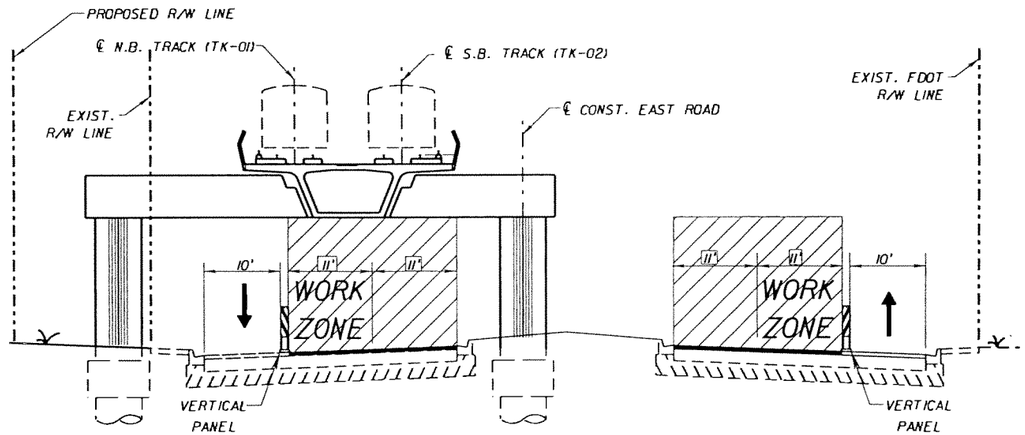

PHASE II

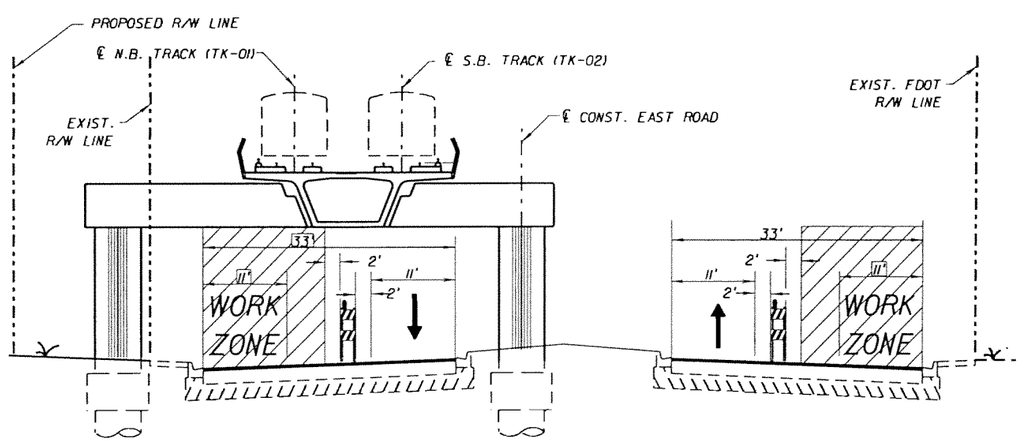

PHASE III

* = EAST ROAD (MDC North Campus)
STA. 230+25.00 TO STA. 237+80.00

PHASE I *

1. PLACE TEMPORARY SIGNS, BARRICADES, CONCRETE BARRIER WALL, FENCE AND PAVEMENT MARKINGS IN ACCORDANCE WITH THE PROJECT PLANS, THE CURRENT EDITION OF THE FLORIDA DOT DESIGN STANDARDS (600 SERIES), THE STANDARD SPECIFICATIONS FOR ROAD AND BRIDGE CONSTRUCTION, AND THE M.U.T.C.D. AS MINIMUM CRITERIA.
2. CLEAR AND GRUB.
3. REMOVE EXISTING MEDIAN AND ASPHALT.
4. CONSTRUCT METRORAIL COLUMN.
5. CONSTRUCT NEW MEDIAN, CURB AND GUTTER TYPE "F".

PHASE II *

1. REMOVE TEMPORARY CONCRETE BARRIER WALL AND PLACE TEMPORARY SIGNS, BARRICADES, AND PAVEMENT MARKINGS IN ACCORDANCE WITH THE PROJECT PLANS, THE CURRENT EDITION OF THE FLORIDA DOT DESIGN STANDARDS (600 SERIES), THE STANDARD SPECIFICATIONS FOR ROAD AND BRIDGE CONSTRUCTION, AND THE M.U.T.C.D. AS MINIMUM CRITERIA.
2. CLEAR AND GRUB.
3. MILL AND RESURFACE INSIDE AND MIDDLE LANE.

PHASE III *

1. PLACE TEMPORARY SIGNS, BARRICADES, AND PAVEMENT MARKINGS IN ACCORDANCE WITH THE PROJECT PLANS, THE CURRENT EDITION OF THE FLORIDA DOT DESIGN STANDARDS (600 SERIES), THE STANDARD SPECIFICATIONS FOR ROAD AND BRIDGE CONSTRUCTION, AND THE M.U.T.C.D. AS MINIMUM CRITERIA.
2. CLEAR AND GRUB.
3. MILL AND RESURFACE OUTSIDE LANE.

PHASE IV *

1. PLACE TEMPORARY SIGNS, BARRICADES, AND PAVEMENT MARKINGS IN ACCORDANCE WITH THE PROJECT PLANS, THE CURRENT EDITION OF THE FLORIDA DOT DESIGN STANDARDS (600 SERIES), THE STANDARD SPECIFICATIONS FOR ROAD AND BRIDGE CONSTRUCTION, AND THE M.U.T.C.D. AS MINIMUM CRITERIA.
2. APPLY FRICTION COURSE, PAVEMENT MARKINGS AND RPM'S IN ACCORDANCE WITH THE SIGNING AND PAVEMENT MARKING PLANS, THE CURRENT EDITION OF THE FLORIDA DOT DESIGN STANDARDS, THE STANDARD SPECIFICATIONS FOR ROAD AND BRIDGE CONSTRUCTION, AND THE M.U.T.C.D. AS MINIMUM CRITERIA.

SUBJECT TO CHANGE

W.L.L. Designed by	05-06 Date					
J.N. / T.W. Drawn by	05-06 Date					
C.V. Checked by	05-02-06 Date					
M.A.B. Approved by	05-05-06 Date	No.	Date	By / Chk	App.	Revisions

NORTH CORRIDOR METRORAIL EXTENSION - PRELIMINARY ENGINEERING (100% SUBMITTAL)

MIAMI-DADE COUNTY — MIAMI-DADE TRANSIT

PARSONS
7600 CORPORATE CENTER DRIVE, SUITE 500
MIAMI, FLORIDA 33126
PHONE: (786) 464-1000 FAX: (786) 845-7119
CERTIFICATE OF AUTHORIZATION NO. 1838
Approved Date

BND
CIVIL ENGINEERING • ENVIRONMENTAL • AIRPORT • CONSTRUCTION MANAGEMENT • TRANSPORTATION
1200 NW 78 AVENUE, SUITE 400
MIAMI, FLORIDA 33126 - (305) 599-8495
Approved MICHAEL A. BUDALL, P.E. Date

ROADWAY - TRAFFIC CONTROL PLANS

TRAFFIC CONTROL PRELIMINARY PHASING

Scale N.T.S. | Drawing TCP-09 | Sheet

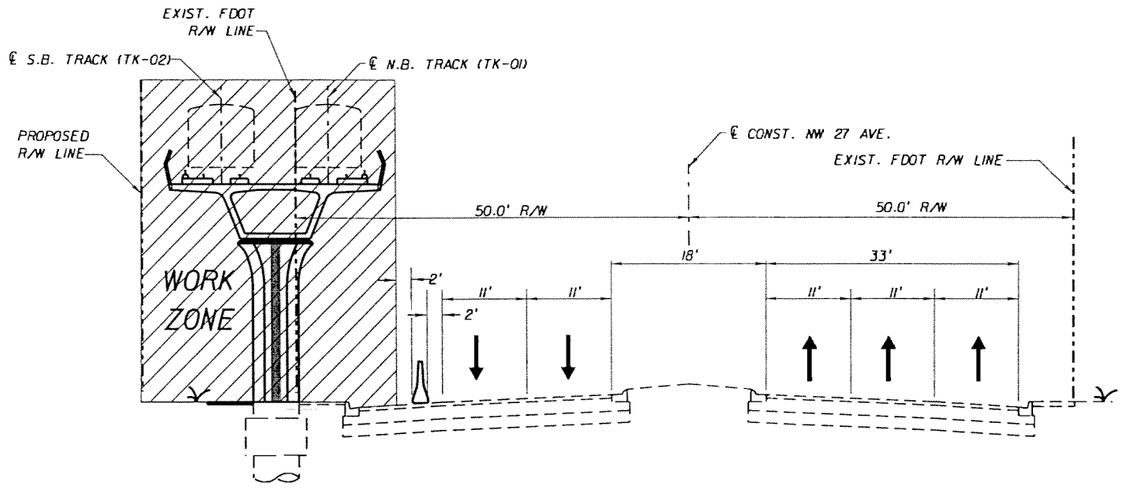

PHASE I

SR 9 / NW 27TH AVENUE
STA. 179+05.00 TO STA. 185+70.00

PHASE I

1. PLACE TEMPORARY SIGNS, BARRICADES, CONCRETE BARRIER WALL, FENCE AND PAVEMENT MARKINGS IN ACCORDANCE WITH THE PROJECT PLANS, THE CURRENT EDITION OF THE FLORIDA DOT DESIGN STANDARDS (600 SERIES), THE STANDARD SPECIFICATIONS FOR ROAD AND BRIDGE CONSTRUCTION, AND THE M.U.T.C.D. AS MINIMUM CRITERIA.
2. CLEAR AND GRUB.
3. CONSTRUCT METRORAIL COLUMN.
4. CONSTRUCT NEW CONCRETE SIDEWALK, CURB AND GUTTER TYPE "F"

SUBJECT TO CHANGE

W.L.L. 05-06 Designed by Date						
J.N. / T.W. 05-06 Drawn by Date						
C.V. 05-02-06 Checked by Date						
M.A.B. 05-05-06 Approved by Date	No.	Date	By / Chk	App.	Revisions	

NORTH CORRIDOR METRORAIL EXTENSION - PRELIMINARY ENGINEERING (100% SUBMITTAL)

MIAMI-DADE COUNTY — MIAMI-DADE TRANSIT

PARSONS
7600 CORPORATE CENTER DRIVE, SUITE 500
MIAMI, FLORIDA 33126
PHONE: (786) 464-1000 FAX: (786) 845-7119
CERTIFICATE OF AUTHORIZATION NO. 1838

Approved ____ Date ____

BND
CIVIL ENGINEERING • ENVIRONMENTAL • AIRPORT • CONSTRUCTION MANAGEMENT • TRANSPORTATION
1200 NW 78 AVENUE, SUITE 400
MIAMI, FLORIDA 33126 - (305) 599-8495

Approved MICHAEL A. BUDALL, P.E. Date ____

ROADWAY - TRAFFIC CONTROL PLANS

TRAFFIC CONTROL PRELIMINARY PHASING

Scale N.T.S. Drawing TCP-10 Sheet 44 of 62

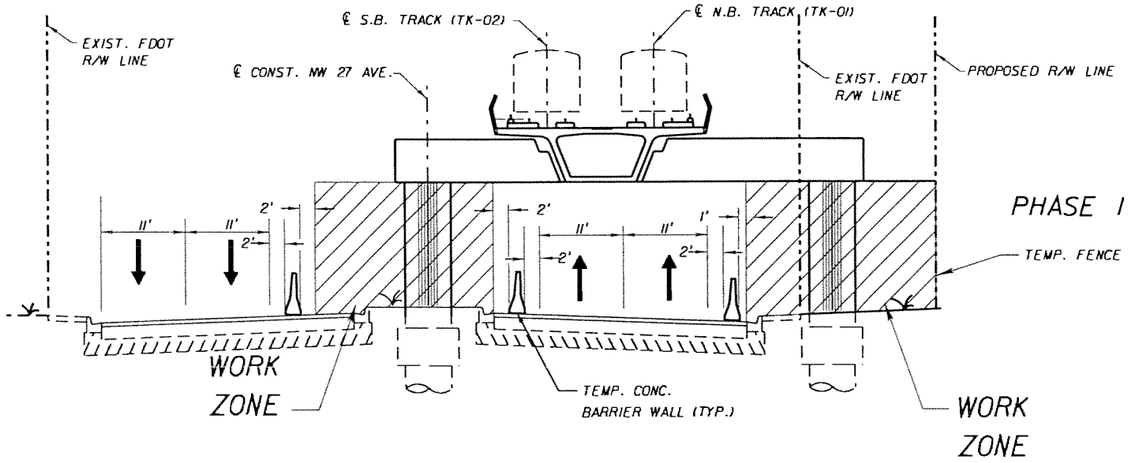

PHASE I

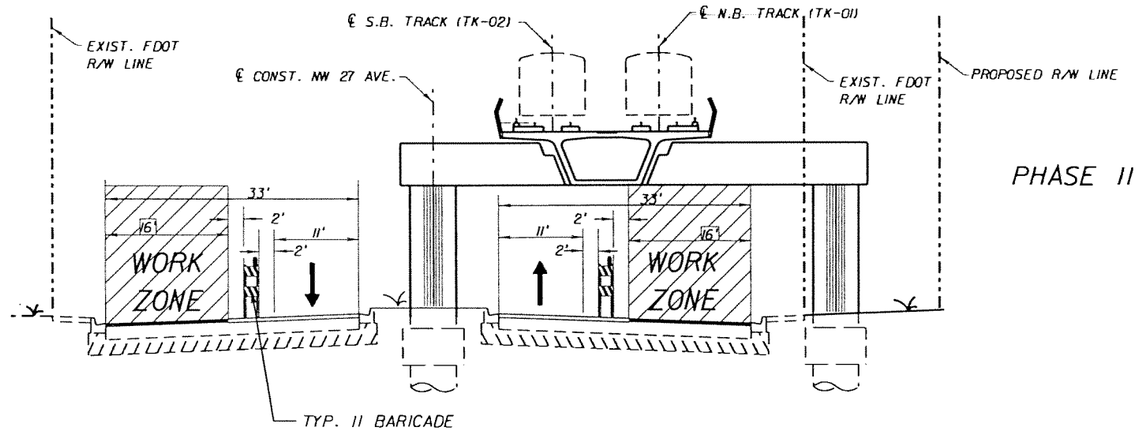

PHASE II

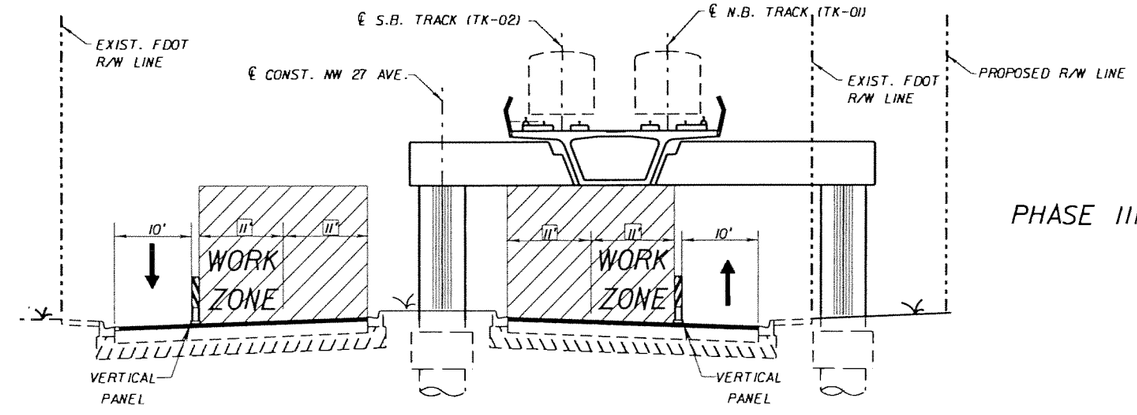

PHASE III

* = SR 9 / NW 27TH AVENUE
STA. 476+00.00 TO STA. 478+05.00

PHASE I *

1. PLACE TEMPORARY SIGNS, BARRICADES, CONCRETE BARRIER WALL FENCE AND PAVEMENT MARKINGS IN ACCORDANCE WITH THE PROJECT PLANS, THE CURRENT EDITION OF THE FLORIDA DOT DESIGN STANDARDS (600 SERIES), THE STANDARD SPECIFICATIONS FOR ROAD AND BRIDGE CONSTRUCTION, AND THE M.U.T.C.D. AS MINIMUM CRITERIA.
2. CLEAR AND GRUB.
3. REMOVE EXISTING MEDIAN AND ASPHALT.
4. CONSTRUCT METRORAIL COLUMN.
5. CONSTRUCT NEW MEDIAN, CURB AND GUTTER TYPE "F".

PHASE II *

1. REMOVE TEMPORARY CONCRETE BARRIER WALL AND PLACE TEMPORARY SIGNS, BARRICADES, AND PAVEMENT MARKINGS IN ACCORDANCE WITH THE PROJECT PLANS, THE CURRENT EDITION OF THE FLORIDA DOT DESIGN STANDARDS (600 SERIES), THE STANDARD SPECIFICATIONS FOR ROAD AND BRIDGE CONSTRUCTION, AND THE M.U.T.C.D. AS MINIMUM CRITERIA.
2. CLEAR AND GRUB.
3. MILL AND RESURFACE OUTSIDE LANE.

PHASE III *

1. PLACE TEMPORARY SIGNS, BARRICADES, AND PAVEMENT MARKINGS IN ACCORDANCE WITH THE PROJECT PLANS, THE CURRENT EDITION OF THE FLORIDA DOT DESIGN STANDARDS (600 SERIES), THE STANDARD SPECIFICATIONS FOR ROAD AND BRIDGE CONSTRUCTION, AND THE M.U.T.C.D. AS MINIMUM CRITERIA.
2. CLEAR AND GRUB.
3. MILL AND RESURFACE INSIDE AND MIDDLE LANE.

PHASE IV *

1. PLACE TEMPORARY SIGNS, BARRICADES, AND PAVEMENT MARKINGS IN ACCORDANCE WITH THE PROJECT PLANS, THE CURRENT EDITION OF THE FLORIDA DOT DESIGN STANDARDS (600 SERIES), THE STANDARD SPECIFICATIONS FOR ROAD AND BRIDGE CONSTRUCTION, AND THE M.U.T.C.D. AS MINIMUM CRITERIA.
2. APPLY FRICTION COURSE, PAVEMENT MARKINGS AND RPM'S IN ACCORDANCE WITH THE SIGNING AND PAVEMENT MARKING PLANS, THE CURRENT EDITION OF THE FLORIDA DOT DESIGN STANDARDS, THE STANDARD SPECIFICATIONS FOR ROAD AND BRIDGE CONSTRUCTION, AND THE M.U.T.C.D. AS MINIMUM CRITERIA.

SUBJECT TO CHANGE

W.L.L.	05-06						
Designed by	Date						
J.N. / T.W.	05-06						
Drawn by	Date						
C.V.	05-02-06						
Checked by	Date						
M.A.B.	05-05-06						
Approved by	Date	No.	Date	By / Chk	App.	Revisions	

NORTH CORRIDOR METRORAIL EXTENSION - PRELIMINARY ENGINEERING (100% SUBMITTAL)

MIAMI-DADE COUNTY

MIAMI-DADE TRANSIT

PARSONS
7600 CORPORATE CENTER DRIVE, SUITE 500
MIAMI, FLORIDA 33126
PHONE: (786) 464-1000 FAX: (786) 845-7119
CERTIFICATE OF AUTHORIZATION NO. 1838

Approved _____ Date _____

BND
CIVIL ENGINEERING • ENVIRONMENTAL • AIRPORT • CONSTRUCTION MANAGEMENT • TRANSPORTATION
1200 NW 78 AVENUE, SUITE 400
MIAMI, FLORIDA 33126 - (305) 599-8495

Approved MICHAEL A. BUDALL, P.E. Date _____

ROADWAY - TRAFFIC CONTROL PLANS

TRAFFIC CONTROL PRELIMINARY PHASING

Scale N.T.S. | Drawing TCP-11 | Sheet 41 of

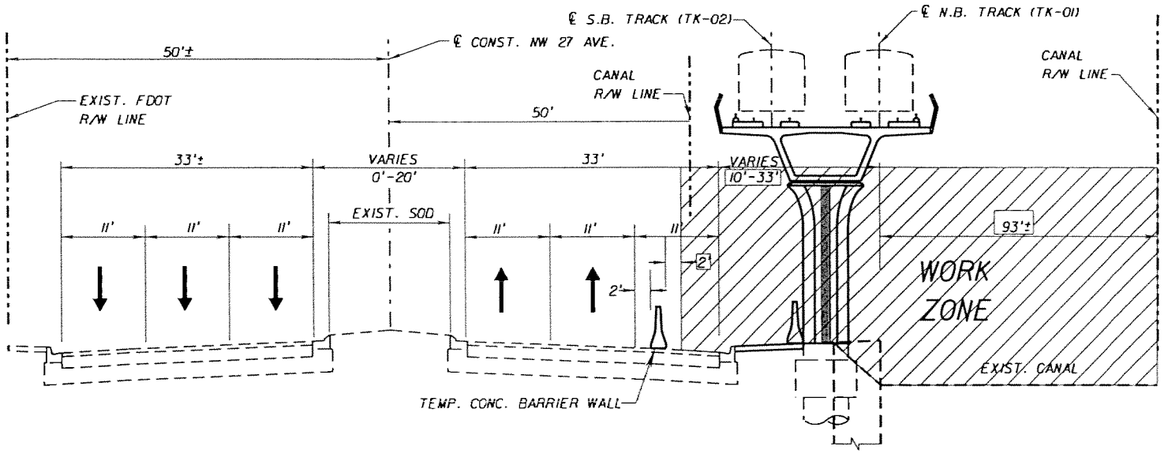

PHASE I

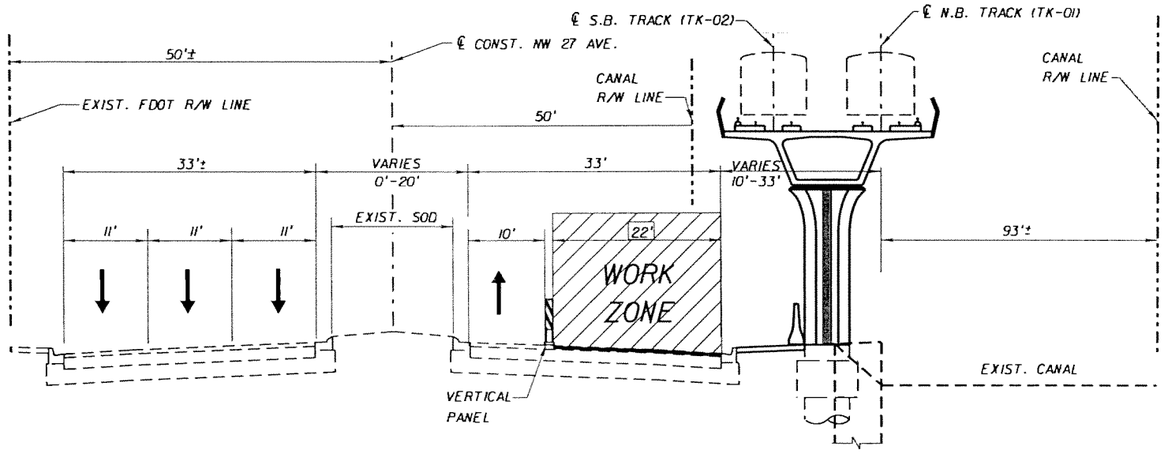

PHASE II

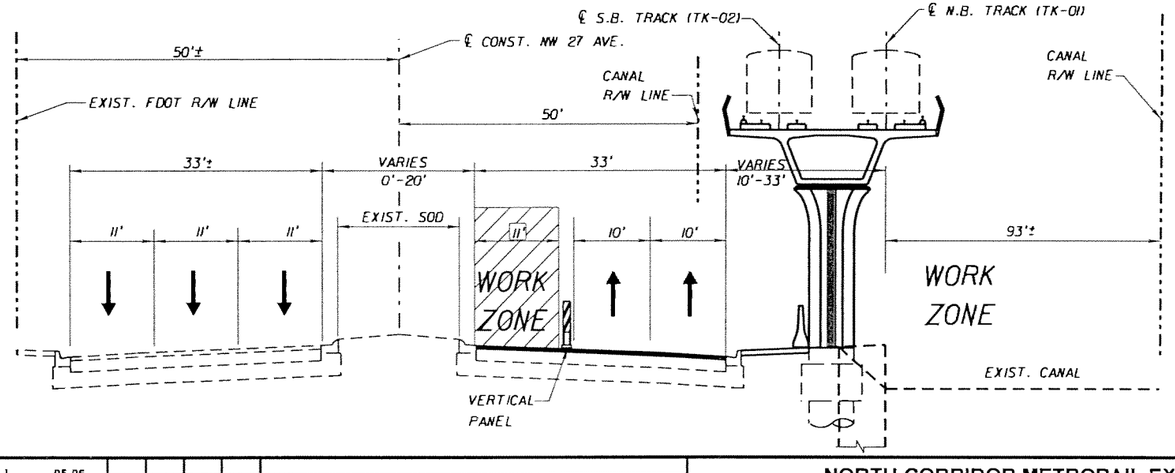

PHASE III

* = SR 817 (NW27TH AVE)
STA. 536+55.00 TO STA. 552+25.00

PHASE I *

1. PLACE TEMPORARY SIGNS, BARRICADES, CONCRETE BARRIER WALL AND PAVEMENT MARKINGS IN ACCORDANCE WITH THE PROJECT PLANS, THE CURRENT EDITION OF THE FLORIDA DOT DESIGN STANDARDS (600 SERIES), THE STANDARD SPECIFICATIONS FOR ROAD AND BRIDGE CONSTRUCTION, AND THE M.U.T.C.D. AS MINIMUM CRITERIA.
2. CLEAR AND GRUB.
3. CONSTRUCT METRORAIL COLUMN.
4. CONSTRUCT NEW SIDEWALK

PHASE II *

1. REMOVE TEMPORARY CONCRETE BARRIER WALL AND PLACE TEMPORARY SIGNS, BARRICADES, AND PAVEMENT MARKINGS IN ACCORDANCE WITH THE PROJECT PLANS, THE CURRENT EDITION OF THE FLORIDA DOT DESIGN STANDARDS (600 SERIES), THE STANDARD SPECIFICATIONS FOR ROAD AND BRIDGE CONSTRUCTION, AND THE M.U.T.C.D. AS MINIMUM CRITERIA.
2. CLEAR AND GRUB.
3. MILL AND RESURFACE MIDDLE AND OUTSIDE LANES.

PHASE III *

1. PLACE TEMPORARY SIGNS, BARRICADES, AND PAVEMENT MARKINGS IN ACCORDANCE WITH THE PROJECT PLANS, THE CURRENT EDITION OF THE FLORIDA DOT DESIGN STANDARDS (600 SERIES), THE STANDARD SPECIFICATIONS FOR ROAD AND BRIDGE CONSTRUCTION, AND THE M.U.T.C.D. AS MINIMUM CRITERIA.
2. CLEAR AND GRUB.
3. MILL AND RESURFACE INSIDE LANE.

PHASE IV *

1. PLACE TEMPORARY SIGNS, BARRICADES, AND PAVEMENT MARKINGS IN ACCORDANCE WITH THE PROJECT PLANS, THE CURRENT EDITION OF THE FLORIDA DOT DESIGN STANDARDS (600 SERIES), THE STANDARD SPECIFICATIONS FOR ROAD AND BRIDGE CONSTRUCTION, AND THE M.U.T.C.D. AS MINIMUM CRITERIA.
2. APPLY FRICTION COURSE, PAVEMENT MARKINGS AND RPM'S IN ACCORDANCE WITH THE SIGNING AND PAVEMENT MARKING PLANS, THE CURRENT EDITION OF THE FLORIDA DOT DESIGN STANDARDS, THE STANDARD SPECIFICATIONS FOR ROAD AND BRIDGE CONSTRUCTION, AND THE M.U.T.C.D. AS MINIMUM CRITERIA.

SUBJECT TO CHANGE

W.L.L.	05-06					
Designed by	Date					
J.N. / T.W.	05-06					
Drawn by	Date					
C.V.	05-02-06					
Checked by	Date					
M.A.B.	05-05-06					
Approved by	Date	No.	Date	By / Chk.	App.	Revisions

NORTH CORRIDOR METRORAIL EXTENSION - PRELIMINARY ENGINEERING (100% SUBMITTAL)

MIAMI-DADE COUNTY — MIAMI-DADE TRANSIT

PARSONS
7600 CORPORATE CENTER DRIVE, SUITE 500
MIAMI, FLORIDA 33126
PHONE: (786) 464-1000 FAX: (786) 845-7119
CERTIFICATE OF AUTHORIZATION NO. 1836

Approved ____ Date ____

BND
CIVIL ENGINEERING • ENVIRONMENTAL • AIRPORT • CONSTRUCTION MANAGEMENT • TRANSPORTATION
1200 NW 78 AVENUE, SUITE 400
MIAMI, FLORIDA 33126 - (305) 599-8495

Approved MICHAEL A. BUDALL, P.E. Date ____

ROADWAY - TRAFFIC CONTROL PLANS

TRAFFIC CONTROL PRELIMINARY PHASING

Scale N.T.S. | Drawing TCP-12 | Sheet 470

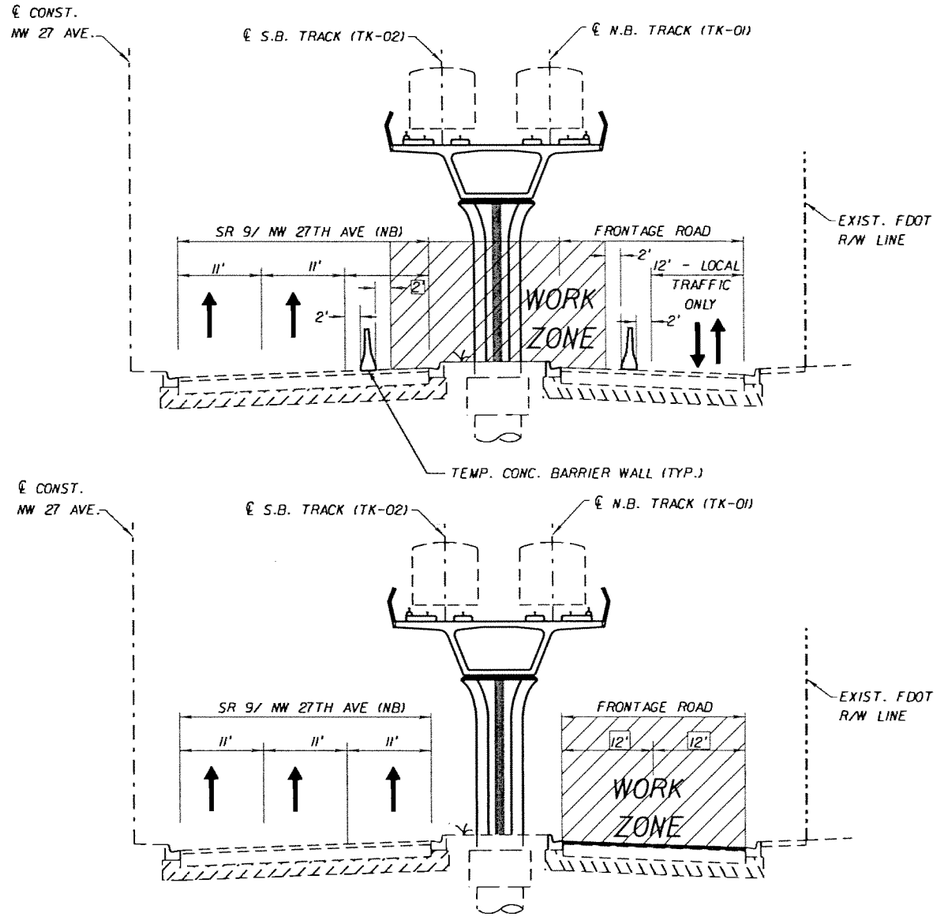

PHASE I

PHASE I

1. PLACE TEMPORARY SIGNS, BARRICADES, CONCRETE BARRIER WALL AND PAVEMENT MARKINGS IN ACCORDANCE WITH THE PROJECT PLANS, THE CURRENT EDITION OF THE FLORIDA DOT DESIGN STANDARDS (600 SERIES), THE STANDARD SPECIFICATIONS FOR ROAD AND BRIDGE CONSTRUCTION, AND THE M.U.T.C.D. AS MINIMUM CRITERIA.
2. CLEAR AND GRUB.
3. CONSTRUCT METRORAIL COLUMN.
4. CONSTRUCT CURB AND GUTTER TYPE "F".

PHASE II

PHASE II

1. REMOVE TEMPORARY CONCRETE BARRIER WALL AND PLACE TEMPORARY SIGNS, BARRICADES, AND PAVEMENT MARKINGS IN ACCORDANCE WITH THE PROJECT PLANS, THE CURRENT EDITION OF THE FLORIDA DOT DESIGN STANDARDS (600 SERIES), THE STANDARD SPECIFICATIONS FOR ROAD AND BRIDGE CONSTRUCTION, AND THE M.U.T.C.D. AS MINIMUM CRITERIA.
2. CLEAR AND GRUB.
3. MILL AND RESURFACE FRONTAGE ROAD

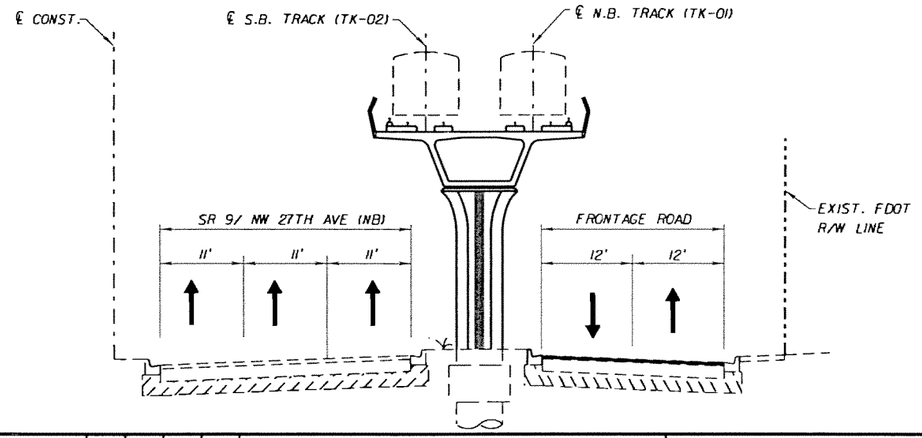

PHASE III

PHASE III

1. PLACE TEMPORARY SIGNS, BARRICADES, AND PAVEMENT MARKINGS IN ACCORDANCE WITH THE PROJECT PLANS, THE CURRENT EDITION OF THE FLORIDA DOT DESIGN STANDARDS (600 SERIES), THE STANDARD SPECIFICATIONS FOR ROAD AND BRIDGE CONSTRUCTION, AND THE M.U.T.C.D. AS MINIMUM CRITERIA.
2. APPLY FRICTION COURSE, PAVEMENT MARKINGS AND RPM'S IN ACCORDANCE WITH THE SIGNING AND PAVEMENT MARKING PLANS, THE CURRENT EDITION OF THE FLORIDA DOT DESIGN STANDARDS, THE STANDARD SPECIFICATIONS FOR ROAD AND BRIDGE CONSTRUCTION, AND THE M.U.T.C.D. AS MINIMUM CRITERIA.

FRONTAGE ROAD
NORTHBOUND NW 27 AVE

SUBJECT TO CHANGE

W.L.L.	05-06					
Designed by	Date					
J.N. / T.W.	05-06					
Drawn by	Date					
C.V.	05-02-06					
Checked by	Date					
M.A.B.	05-05-06					
Approved by	Date	No.	Date	By / Chk	App.	Revisions

NORTH CORRIDOR METRORAIL EXTENSION - PRELIMINARY ENGINEERING (100% SUBMITTAL)

MIAMI-DADE COUNTY

MIAMI-DADE TRANSIT

PARSONS
7600 CORPORATE CENTER DRIVE, SUITE 500
MIAMI, FLORIDA 33126
PHONE: (786) 454-1000 FAX: (786) 845-7119
CERTIFICATE OF AUTHORIZATION NO. 1838
Approved | Date

BND
CIVIL ENGINEERING • ENVIRONMENTAL • AIRPORT • CONSTRUCTION MANAGEMENT • TRANSPORTATION
1200 NW 78 AVENUE, SUITE 400
MIAMI, FLORIDA 33126 - (305) 599-8495
Approved MICHAEL A. BUDALL, P.E. | Date

ROADWAY - TRAFFIC CONTROL PLANS

TRAFFIC CONTROL PRELIMINARY PHASING

Scale N.T.S. | Drawing TCP-13 | Sheet 471

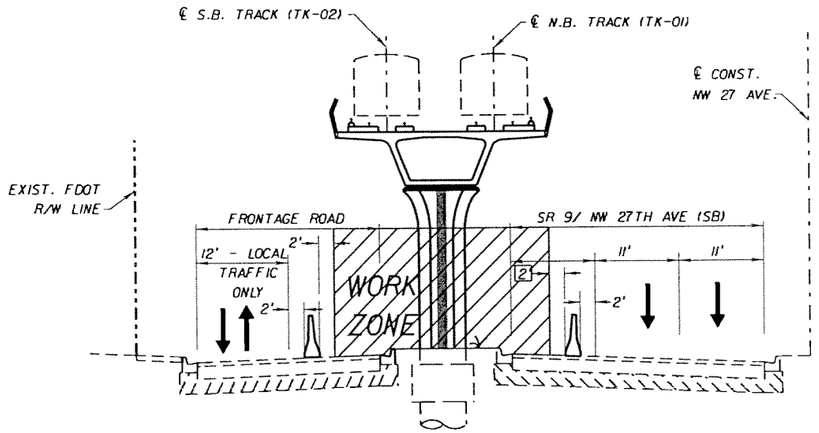

PHASE I

PHASE I

1. PLACE TEMPORARY SIGNS, BARRICADES, CONCRETE BARRIER WALL AND PAVEMENT MARKINGS IN ACCORDANCE WITH THE PROJECT PLANS, THE CURRENT EDITION OF THE FLORIDA DOT DESIGN STANDARDS (600 SERIES), THE STANDARD SPECIFICATIONS FOR ROAD AND BRIDGE CONSTRUCTION, AND THE M.U.T.C.D. AS MINIMUM CRITERIA.
2. CLEAR AND GRUB.
3. CONSTRUCT METRORAIL COLUMN.
4. CONSTRUCT CURB AND GUTTER TYPE "F".

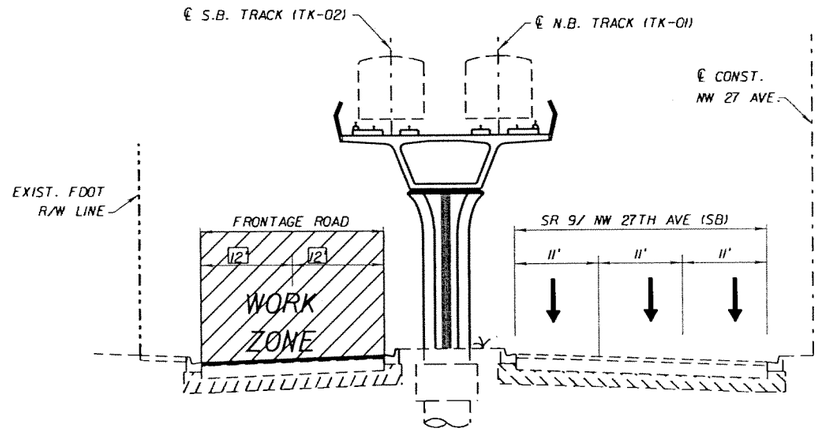

PHASE II

PHASE II

1. REMOVE TEMPORARY CONCRETE BARRIER WALL AND PLACE TEMPORARY SIGNS, BARRICADES, AND PAVEMENT MARKINGS IN ACCORDANCE WITH THE PROJECT PLANS, THE CURRENT EDITION OF THE FLORIDA DOT DESIGN STANDARDS (600 SERIES), THE STANDARD SPECIFICATIONS FOR ROAD AND BRIDGE CONSTRUCTION, AND THE M.U.T.C.D. AS MINIMUM CRITERIA.
2. CLEAR AND GRUB.
3. MILL AND RESURFACE FRONTAGE ROAD.

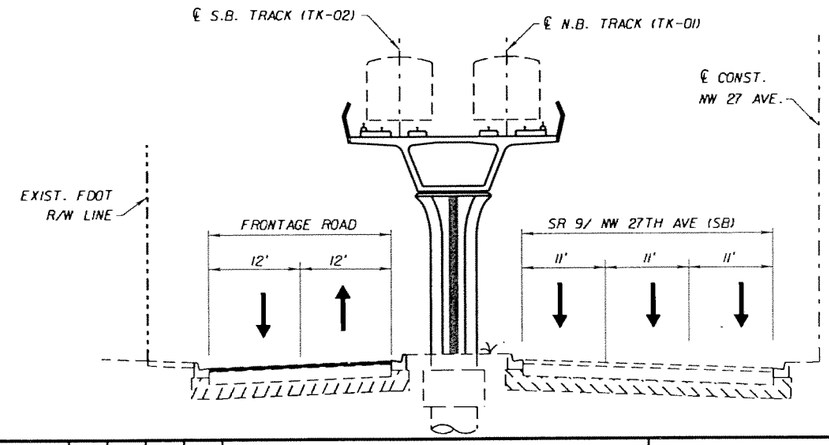

PHASE III

PHASE III

1. PLACE TEMPORARY SIGNS, BARRICADES, AND PAVEMENT MARKINGS IN ACCORDANCE WITH THE PROJECT PLANS, THE CURRENT EDITION OF THE FLORIDA DOT DESIGN STANDARDS (600 SERIES), THE STANDARD SPECIFICATIONS FOR ROAD AND BRIDGE CONSTRUCTION, AND THE M.U.T.C.D. AS MINIMUM CRITERIA.
2. APPLY FRICTION COURSE, PAVEMENT MARKINGS AND RPM'S IN ACCORDANCE WITH THE SIGNING AND PAVEMENT MARKING PLANS, THE CURRENT EDITION OF THE FLORIDA DOT DESIGN STANDARDS, THE STANDARD SPECIFICATIONS FOR ROAD AND BRIDGE CONSTRUCTION, AND THE M.U.T.C.D. AS MINIMUM CRITERIA.

FRONTAGE ROAD
SOUTHBOUND NW 27 AVE

SUBJECT TO CHANGE

W.L.L. Designed by	05-06 Date						
J.N. / T.W. Drawn by	05-06 Date						
C.V. Checked by	05-02-06 Date						
M.A.B. Approved by	05-05-06 Date	No.	Date	By / Chk	App.	Revisions	

NORTH CORRIDOR METRORAIL EXTENSION - PRELIMINARY ENGINEERING (100% SUBMITTAL)

MIAMI-DADE COUNTY — MIAMI-DADE TRANSIT

PARSONS
7600 CORPORATE CENTER DRIVE, SUITE 500
MIAMI, FLORIDA 33126
PHONE: (786) 464-1000 FAX: (786) 845-7119
CERTIFICATE OF AUTHORIZATION NO. 1838
Approved Date

BND
CIVIL ENGINEERING • ENVIRONMENTAL • AIRPORT • CONSTRUCTION MANAGEMENT • TRANSPORTATION
1200 NW 78 AVENUE, SUITE 400
MIAMI, FLORIDA 33126 - (305) 599-8495
Approved MICHAEL A. BUDALL, P.E. Date

ROADWAY - TRAFFIC CONTROL PLANS

TRAFFIC CONTROL PRELIMINARY PHASING

Scale N.T.S. | Drawing TCP-14 | Sheet 1172

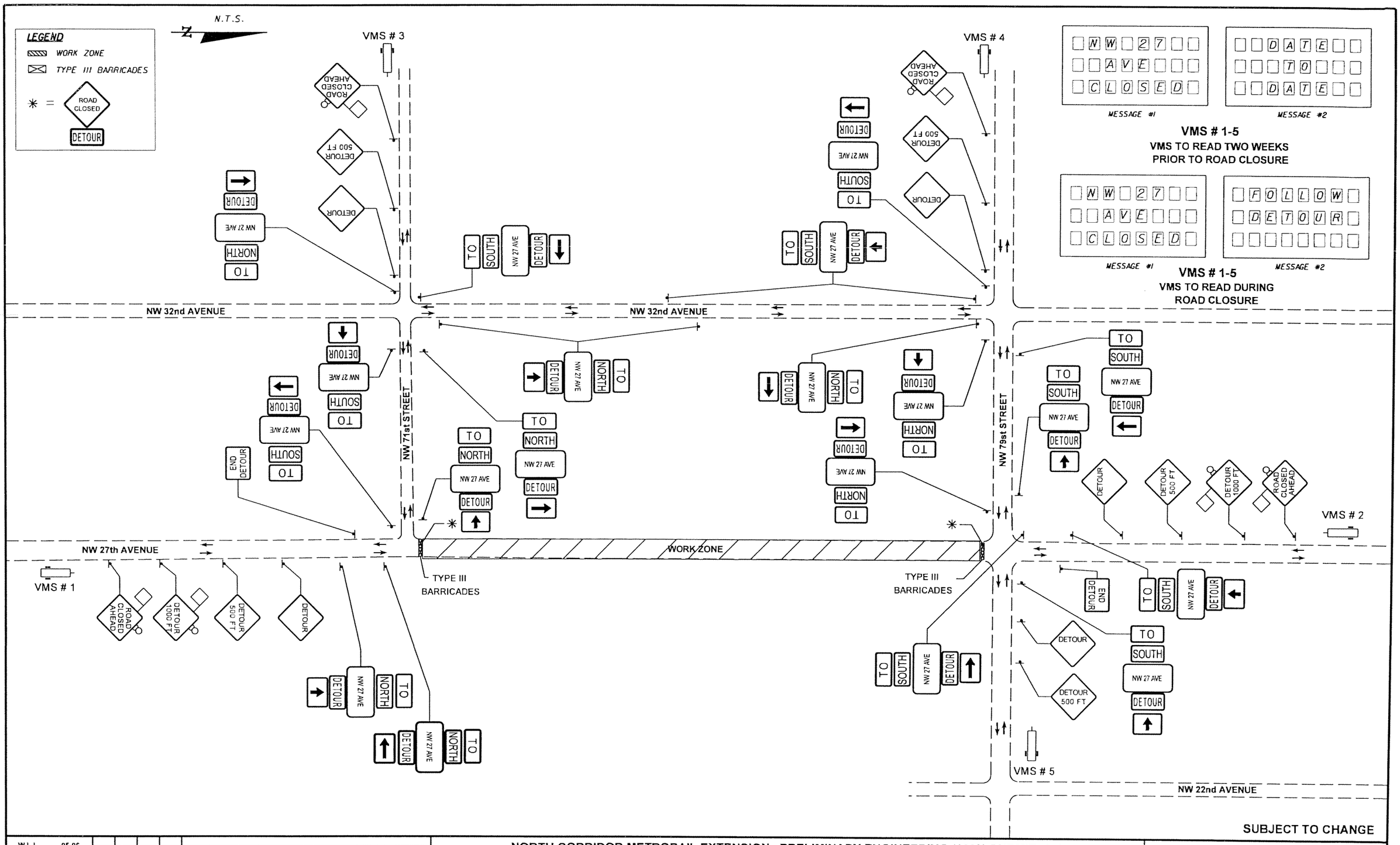

W.L.L. Designed by	05-06 Date					
J.N. / T.W. Drawn by	05-06 Date					
C.V. Checked by	05-02-06 Date					
T.B. Approved by	05-05-06 Date	No.	Date	By / Chk	App.	Revisions

NORTH CORRIDOR METRORAIL EXTENSION - PRELIMINARY ENGINEERING (100% SUBMITTAL)

ROADWAY - TRAFFIC CONTROL PLANS

MIAMI-DADE COUNTY

MIAMI-DADE TRANSIT

PARSONS
7600 CORPORATE CENTER DRIVE, SUITE 500
MIAMI, FLORIDA 33126
PHONE: (786) 464-1000 FAX: (786) 845-7119
CERTIFICATE OF AUTHORIZATION NO. 1838

BND
CIVIL ENGINEERING • ENVIRONMENTAL • AIRPORT • CONSTRUCTION MANAGEMENT • TRANSPORTATION
1200 NW 78 AVENUE, SUITE 400
MIAMI, FLORIDA 33126 - (305) 599-8495

Approved ---- Date ----

Approved T. BUDALL, P.E. Date ----

DETOUR

Scale N.T.S. Drawing TCP-15 Sheet 473

N.T.S.

LEGEND

- WORK ZONE
- TYPE III BARRICADES
- ✳ = ROAD CLOSED / DETOUR

MESSAGE #1: NW 27 AVE / CLOSED

MESSAGE #2: DATE TO DATE

VMS # 1 & 2
VMS TO READ TWO WEEKS PRIOR TO ROAD CLOSURE

MESSAGE #1: NW 27 AVE / CLOSED

MESSAGE #2: FOLLOW DETOUR

VMS # 1 & 2
VMS TO READ DURING ROAD CLOSURE

NW 32nd AVENUE

NW 79st STREET

NW 85st STREET

NW 27th AVENUE

NW 22nd AVENUE

WORK ZONE

TYPE III BARRICADES

TYPE III BARRICADES

VMS #1

VMS # 2

SUBJECT TO CHANGE

W.L.L. Designed by	05-05-06 Date						
J.N. / T.W. Drawn by	05-06 Date						
C.V. Checked by	05-02-06 Date						
T.B. Approved by	05-05-06 Date	No.	Date	By / Chk	App.	Revisions	

NORTH CORRIDOR METRORAIL EXTENSION - PRELIMINARY ENGINEERING (100% SUBMITTAL)

ROADWAY - TRAFFIC CONTROL PLANS

MIAMI-DADE COUNTY — MIAMI-DADE TRANSIT

PARSONS
7600 CORPORATE CENTER DRIVE, SUITE 500
MIAMI, FLORIDA 33126
PHONE: (786) 464-1000 FAX: (786) 845-7119
CERTIFICATE OF AUTHORIZATION NO. 1838

BND
CIVIL ENGINEERING • ENVIRONMENTAL • AIRPORT • CONSTRUCTION MANAGEMENT • TRANSPORTATION
1200 NW 78 AVENUE, SUITE 400
MIAMI, FLORIDA 33126 - (305) 599-8495

Approved ----- Date -----

Approved T. BUDALL, P.E. Date -----

DETOUR

Scale N.T.S. Drawing TCP-16 Sheet 474

N.T.S.

LEGEND

- WORK ZONE
- TYPE III BARRICADES
- ✳ = ROAD CLOSED / DETOUR

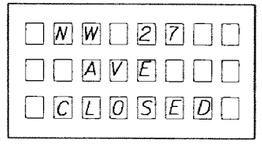

MESSAGE #1 — MESSAGE #2

VMS # 1 & 2
VMS TO READ TWO WEEKS PRIOR TO ROAD CLOSURE

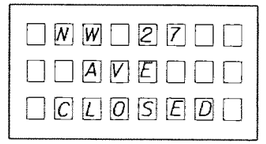

MESSAGE #1 — MESSAGE #2

VMS # 1 & 2
VMS TO READ DURING ROAD CLOSURE

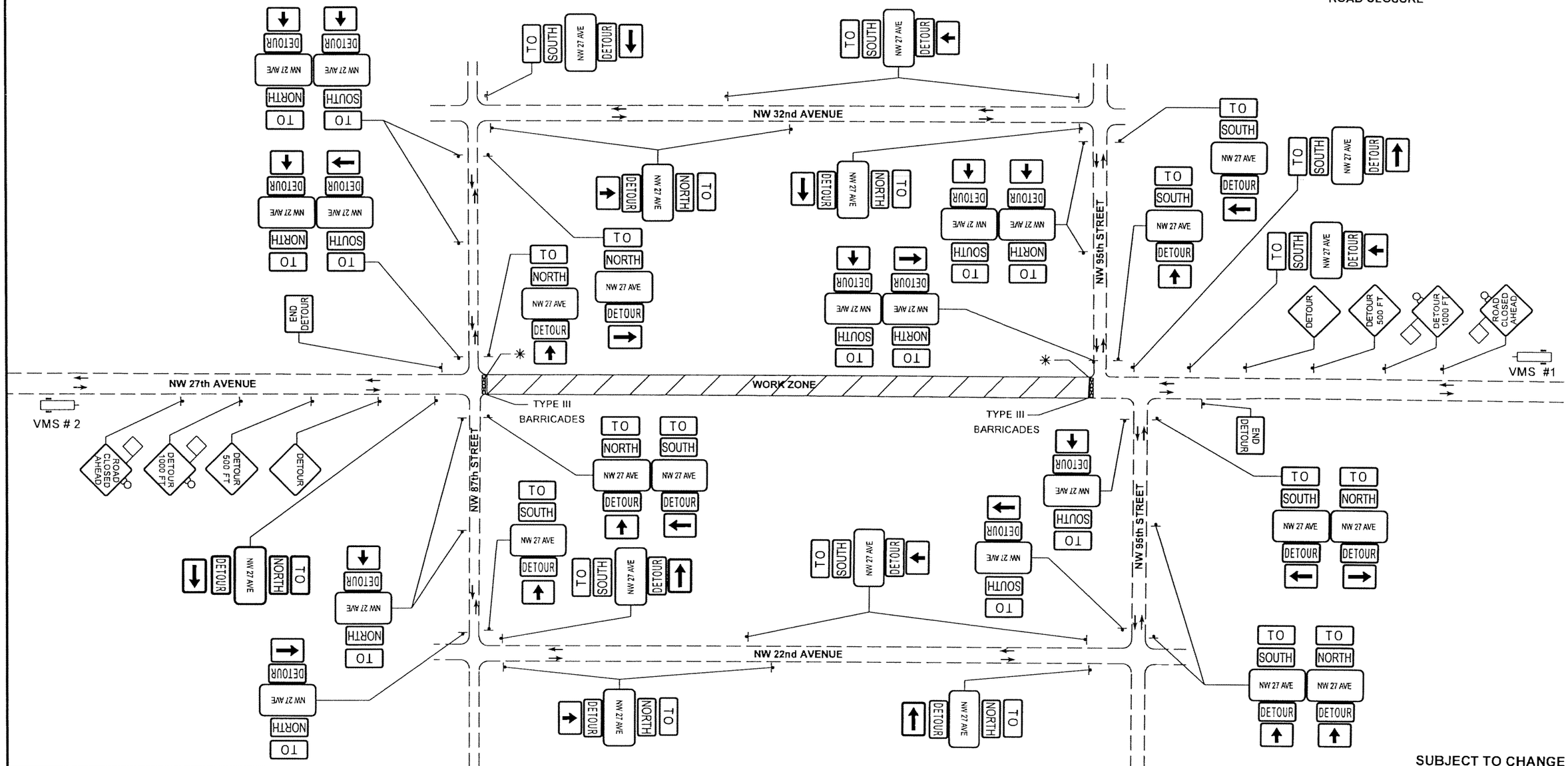

SUBJECT TO CHANGE

W.L.L. Designed by	05-06 Date					
J.N. / T.W. Drawn by	05-06 Date					
C.V. Checked by	05-02-06 Date					
T.B. Approved by	05-05-06 Date	No.	Date	By / Chk	App.	Revisions

NORTH CORRIDOR METRORAIL EXTENSION - PRELIMINARY ENGINEERING (100% SUBMITTAL)

ROADWAY - TRAFFIC CONTROL PLANS

MIAMI-DADE COUNTY — MIAMI-DADE TRANSIT

PARSONS
7600 CORPORATE CENTER DRIVE, SUITE 500
MIAMI, FLORIDA 33126
PHONE: (786) 464-1000 FAX: (786) 845-7119
CERTIFICATE OF AUTHORIZATION NO. 1838
Approved ----- Date -----

BND
CIVIL ENGINEERING • ENVIRONMENTAL • AIRPORT • CONSTRUCTION MANAGEMENT • TRANSPORTATION
1200 NW 78 AVENUE, SUITE 400
MIAMI, FLORIDA 33126 • (305) 599-8495
Approved T. BUDALL, P.E. Date -----

DETOUR

Scale N.T.S. | Drawing TCP-17 | Sheet 475

N.T.S.

LEGEND

- WORK ZONE
- TYPE III BARRICADES
- ✳ = ROAD CLOSED / DETOUR

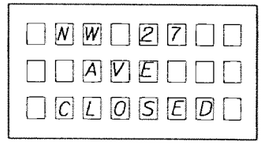

MESSAGE #1

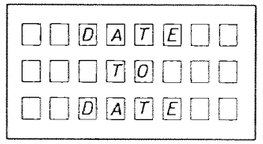

MESSAGE #2

VMS # 1 & 2
VMS TO READ TWO WEEKS PRIOR TO ROAD CLOSURE

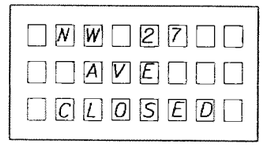

MESSAGE #1

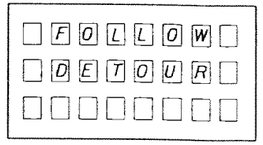

MESSAGE #2

VMS # 1 & 2
VMS TO READ DURING ROAD CLOSURE

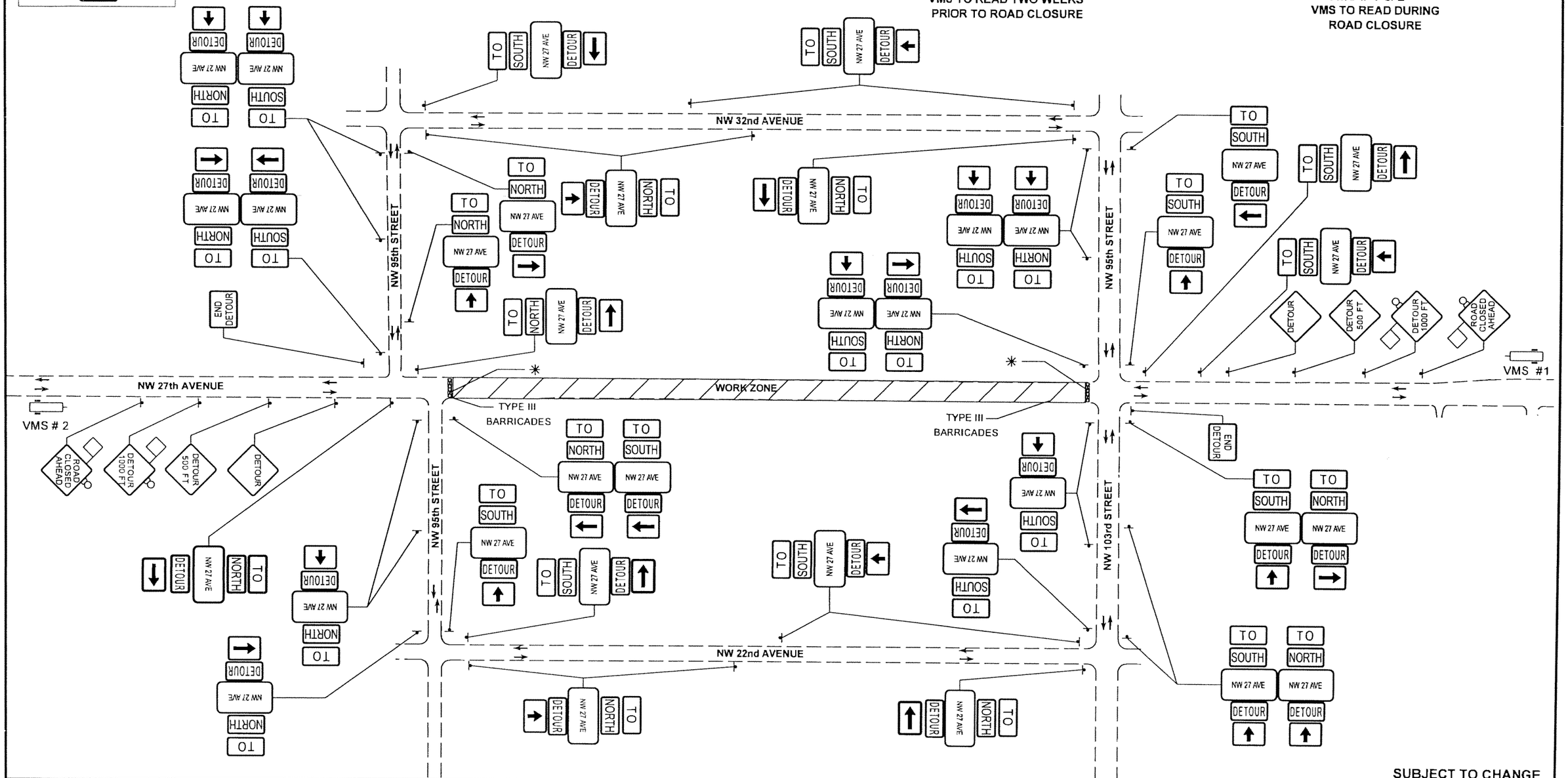

SUBJECT TO CHANGE

W.L.L. Designed by	05-06 Date						
J.N. / T.W. Drawn by	05-06 Date						
C.V. Checked by	05-02-06 Date						
T.B. Approved by	05-05-06 Date	No.	Date	By / Chk.	App.	Revisions	

NORTH CORRIDOR METRORAIL EXTENSION - PRELIMINARY ENGINEERING (100% SUBMITTAL)

ROADWAY - TRAFFIC CONTROL PLANS

MIAMI-DADE COUNTY

MIAMI-DADE TRANSIT

PARSONS
7600 CORPORATE CENTER DRIVE, SUITE 500
MIAMI, FLORIDA 33126
PHONE: (786) 464-1000 FAX: (786) 845-7119
CERTIFICATE OF AUTHORIZATION NO. 1838

Approved ---- Date ----

BND
CIVIL ENGINEERING • ENVIRONMENTAL • AIRPORT • CONSTRUCTION MANAGEMENT • TRANSPORTATION
1200 NW 78 AVENUE, SUITE 100
MIAMI, FLORIDA 33126 - (305) 599-8495

Approved T. BUDALL, P.E. Date ----

DETOUR

Scale N.T.S. Drawing TCP-18 Sheet 476

N.T.S.

LEGEND

- WORK ZONE
- TYPE III BARRICADES
- ✳ = ROAD CLOSED
- ✳✳ = PARKING ENTRANCE

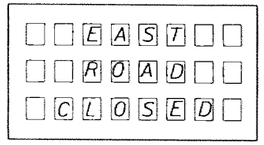

MESSAGE #1

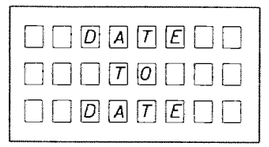

MESSAGE #2

VMS # 1 & 2
VMS TO READ TWO WEEKS PRIOR TO ROAD CLOSURE

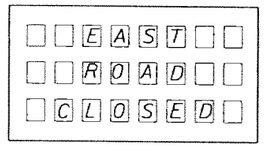

MESSAGE #1

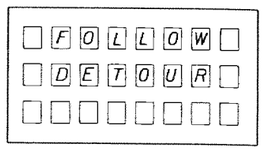

MESSAGE #2

VMS # 1 & 2
VMS TO READ DURING ROAD CLOSURE

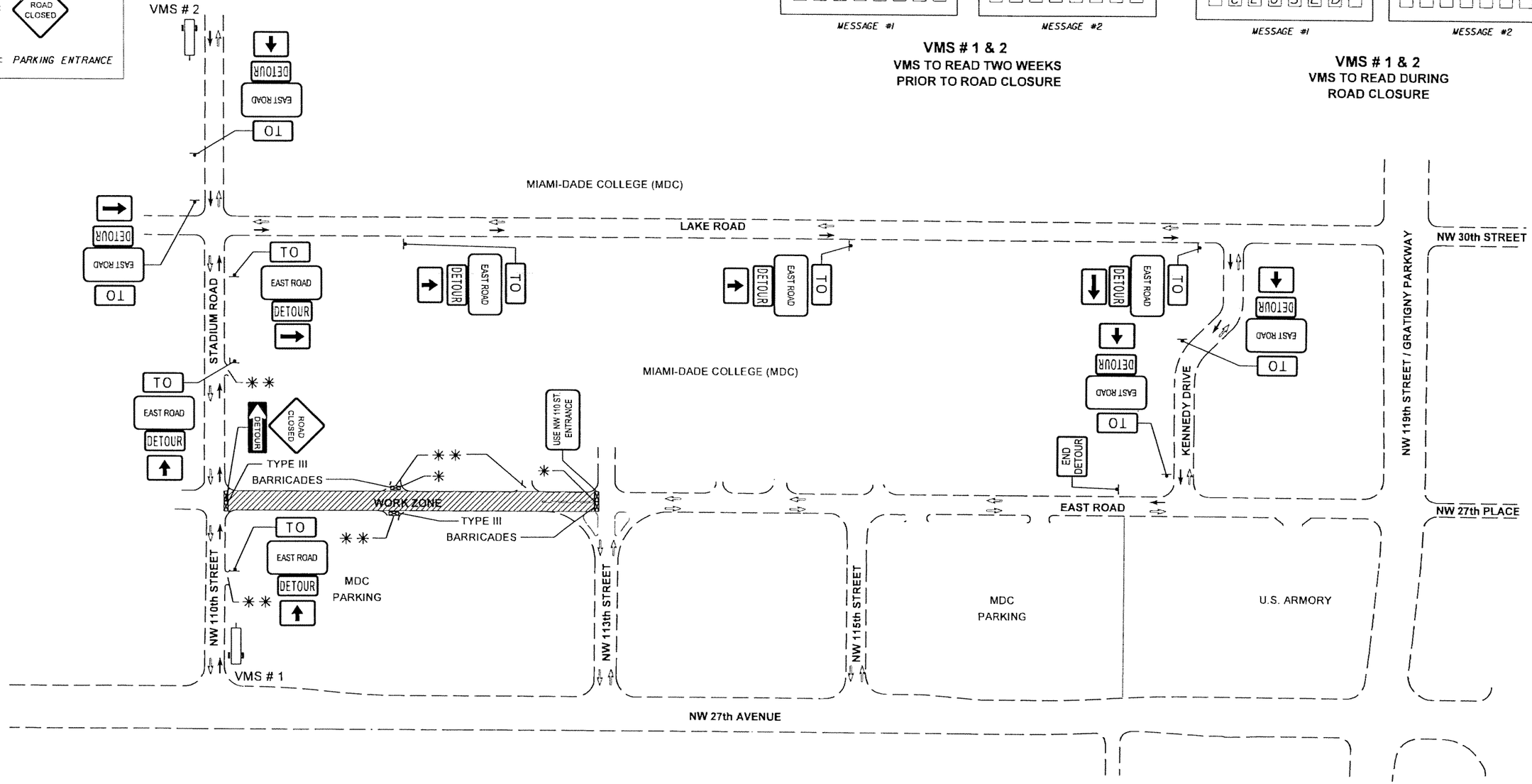

SUBJECT TO CHANGE

W.L.L. Designed by	05-06 Date					
J.N. / T.W. Drawn by	05-06 Date					
C.V. Checked by	05-02-06 Date					
T.B. Approved by	05-05-06 Date	No.	Date	By / Chk	App.	Revisions

NORTH CORRIDOR METRORAIL EXTENSION - PRELIMINARY ENGINEERING (100% SUBMITTAL)

MIAMI-DADE COUNTY — MIAMI-DADE TRANSIT

PARSONS
7600 CORPORATE CENTER DRIVE, SUITE 500
MIAMI, FLORIDA 33126
PHONE: (786) 464-1000 FAX: (786) 845-7119
CERTIFICATE OF AUTHORIZATION NO. 1838
Approved ---- Date ----

BND
CIVIL ENGINEERING • ENVIRONMENTAL • AIRPORT • CONSTRUCTION MANAGEMENT • TRANSPORTATION
1200 NW 78 AVENUE, SUITE 400
MIAMI, FLORIDA 33126 - (305) 599-8495
Approved T. BUDALL, P.E. Date ----

ROADWAY - TRAFFIC CONTROL PLANS

DETOUR

Scale N.T.S. | Drawing TCP-19 | Sheet 4 of 7

N.T.S.

LEGEND

- WORK ZONE
- TYPE III BARRICADES
- ✳ = ROAD CLOSED
- ✳✳ = PARKING ENTRANCE

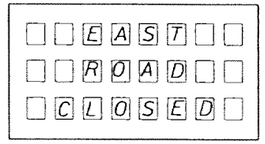

MESSAGE #1

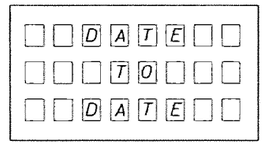

MESSAGE #2

VMS # 1 & 2
VMS TO READ TWO WEEKS PRIOR TO ROAD CLOSURE

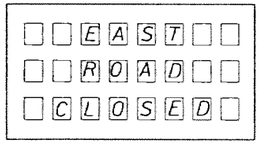

MESSAGE #1

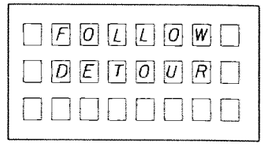

MESSAGE #2

VMS # 1 & 2
VMS TO READ DURING ROAD CLOSURE

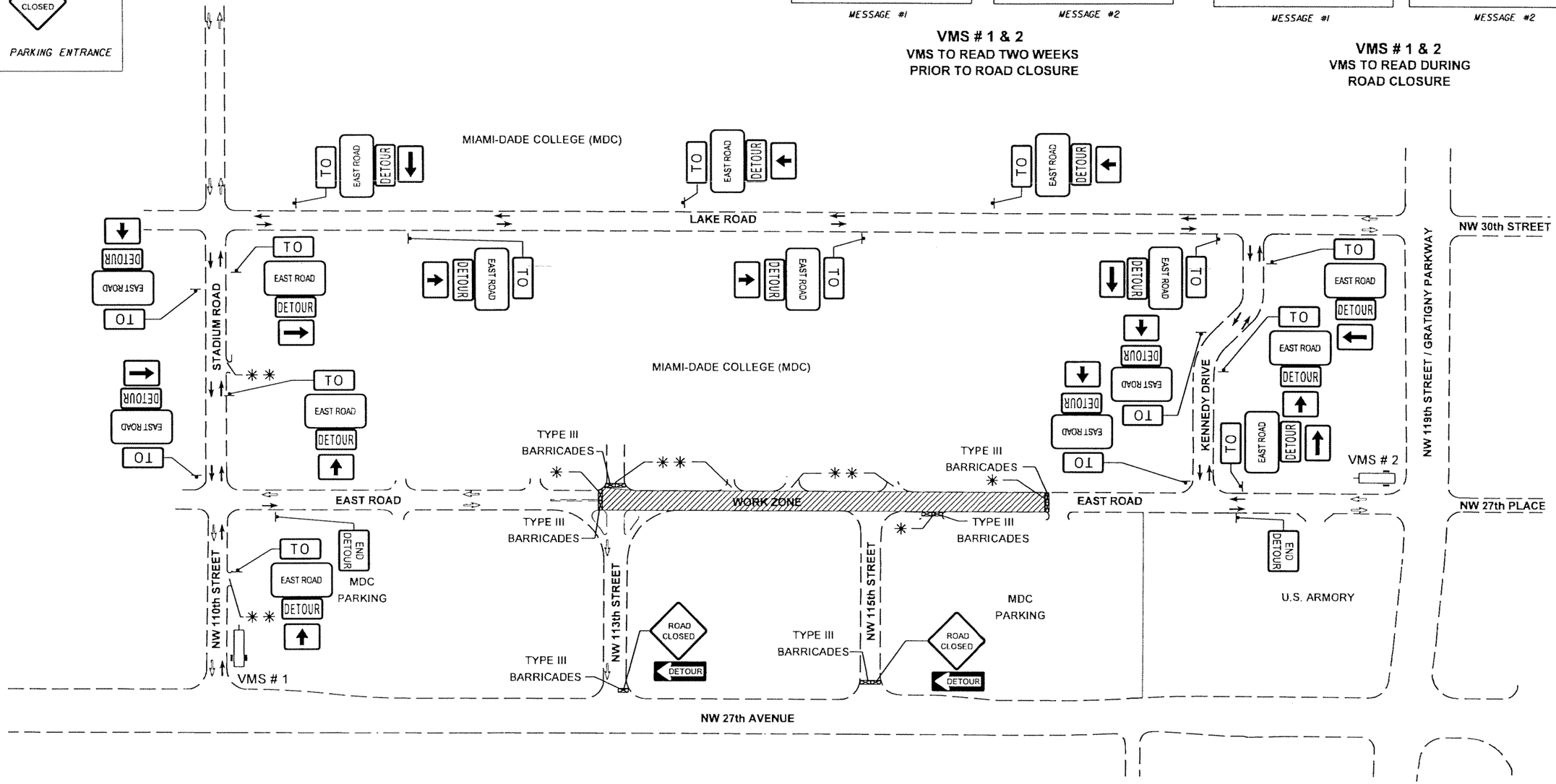

SUBJECT TO CHANGE

W.L.L. Designed by	05-06 Date					
J.N. / T.W. Drawn by	05-06 Date					
C.V. Checked by	05-02-06 Date					
T.B. Approved by	05-05-06 Date	No.	Date	By / Chk	App.	Revisions

NORTH CORRIDOR METRORAIL EXTENSION - PRELIMINARY ENGINEERING (100% SUBMITTAL)

ROADWAY - TRAFFIC CONTROL PLANS

MIAMI-DADE COUNTY — MIAMI-DADE TRANSIT

PARSONS
7600 CORPORATE CENTER DRIVE, SUITE 500
MIAMI, FLORIDA 33126
PHONE: (786) 464-1000 FAX: (786) 845-7119
CERTIFICATE OF AUTHORIZATION NO. 1838
Approved ---- Date ----

BND
CIVIL ENGINEERING • ENVIRONMENTAL • AIRPORT • CONSTRUCTION MANAGEMENT • TRANSPORTATION
1200 NW 78 AVENUE, SUITE 400
MIAMI, FLORIDA 33126 - (305) 599-8495
Approved T. BUDALL, P.E. Date ----

DETOUR

Scale N.T.S. | Drawing TCP-20 | Sheet 478

N.T.S.

LEGEND

- WORK ZONE
- TYPE III BARRICADES
- ✳ = ROAD CLOSED
- ✳✳ = PARKING ENTRANCE

MIAMI-DADE COLLEGE (MDC)

LAKE ROAD

STADIUM ROAD

NW 30th STREET

NW 119th STREET / GRATIGNY PARKWAY

KENNEDY DRIVE

EAST ROAD

NW 110th STREET

NW 113th STREET

NW 115th STREET

NW 27th PLACE

NW 27th AVENUE

TYPE III BARRICADES

WORK ZONE

MDC PARKING

U.S. ARMORY

SUBJECT TO CHANGE

W.L.L. Designed by	05-06 Date					NORTH CORRIDOR METRORAIL EXTENSION - PRELIMINARY ENGINEERING (100% SUBMITTAL)	ROADWAY - TRAFFIC CONTROL PLANS
J.N. / T.W. Drawn by	05-06 Date						
C.V. Checked by	05-02-06 Date					MIAMI-DADE COUNTY / MIAMI-DADE TRANSIT	DETOUR
T.B. Approved by	05-05-06 Date	No.	Date	By / Chk	App.	Revisions	

PARSONS
7600 CORPORATE CENTER DRIVE, SUITE 500
MIAMI, FLORIDA 33126
PHONE: (786) 464-1000 FAX: (786) 845-7119
CERTIFICATE OF AUTHORIZATION NO. 1838
Approved ----- Date -----

BND
CIVIL ENGINEERING · ENVIRONMENTAL · AIRPORT · CONSTRUCTION MANAGEMENT · TRANSPORTATION
1200 NW 78 AVENUE, SUITE 400
MIAMI, FLORIDA 33126 · (305) 599-8495
Approved T. BUDALL, P.E. Date -----

Scale N.T.S. | Drawing TCP-21 | Sheet 479

SIGNING & PAVEMENT MARKING NOTES

1. ALL SIGNING AND PAVEMENT MARKINGS INSTALLED AS PART OF THESE PLANS SHALL CONFORM TO THE MILLENNIUM EDITION OF FEDERAL HIGHWAY ADMINISTRATION (FHWA) MANUAL OF UNIFORM TRAFFIC CONTROL DEVICES FOR THE STREET AND HIGHWAYS, FLORIDA DEPARTMENT OF TRANSPORTATION DESIGN STANDARDS (2004). ALL SIGN PANELS SHALL BE FABRICATED TO COMPLY WITH THE MOST RECENT EDITION OF FEDERAL HIGHWAY AND ADMINISTRATION STANDARD HIGHWAY SIGNS.

2. MATCH EXISTING PAVEMENT MARKINGS AT THE BEGINNING AND THE END OF THE PROJECT AND AT ALL SIDE STREETS WITHOUT JOGS AND OFFSETS.

3. SIGN ASSEMBLY LOCATIONS SHOWN ON PLANS WHICH ARE IN CONFLICT WITH LIGHTING, UTILITIES, DRIVEWAYS, WHEELCHAIR RAMPS, ETC., MAY BE ADJUSTED SLIGHTLY AS DIRECTED BY ENGINEER. EXTREME LOCATION CHANGES MUST BE APPROVED BY DISTRICT TRAFFIC OPERATION DEPARTMENT.

4. INCORRECTLY PLACED (THERMOPLASTIC OR) PAINT MARKINGS OVER FRICTION COURSE WILL BE REMOVED BY MILLING AND REPLACING THE FRICTION COURSE A MINIMUM WIDTH OF 18 INCHES AT THE CONTRACTOR'S EXPENSE. THE ENGINEER MAY APPROVE AN ALTERNATIVE METHOD IF IT CAN BE DEMONSTRATED TO COMPLETELY REMOVE THE MARKINGS WITHOUT DAMAGING THE ASPHALT.

5. THE CONTRACTOR SHALL RELOCATE ALL EXISTING POST-MOUNTED STREET NAME AND STOP SIGNS TO VISIBLE AREA UNDISTURBED BY THE CONSTRUCTION SO AS TO MINIMIZE DAMAGE TO THE SIGNS DURING CONSTRUCTION. THE STREET NAME SHALL BE REATTACHED TO THE TOP OF THE NEW STOP SIGN ON MINOR SIDE STREETS AT THE END OF CONSTRUCTION. THE NEW STOP SIGNS SHALL HAVE ADEQUATE LENGTH TO ACCOMMODATE THE EXISTING STREET NAMES AT THE TOP. COST OF RELOCATION AND REATTACHMENT OF SAID SIGN SHALL BE PAID FOR UNDER PAY ITEM 102-1, MAINTENANCE OF TRAFFIC.

6. EXTRUDED ALUMINUM SIGN SUPPORT CLAMPS ARE NOT ACCEPTABLE. ALL RELOCATED SIGNS MUST COMPLY WITH THE STANDARD SPECIFICATIONS, SPECIAL PROVISIONS AND ROADWAY DESIGN AND TRAFFIC STANDARDS AS IF THEY WERE NEW SIGNS. IF EXISTING CLAMPS, BRACKETS, POLES, ETC. NEED TO BE REPLACED THE COST SHALL BE INCLUDED IN THE RELOCATION PAY ITEMS.

7. THE CONTRACTOR SHALL SUBMIT A LIST OF THE EXISTING SIGNS TO THE PROJECT ENGINEER AT THE PRE-CONSTRUCTION CONFERENCE. ANY LOST OR DAMAGED DURING CONSTRUCTION SIGNS SHALL BE REPLACED AT NO ADDITIONAL COST. COST OF MAINTAINING OF EXISTING SIGNS TO BE INCLUDED IN ITEM 102-1, MAINTENANCE OF TRAFFIC.

UTILITES NOTES

1. FOR UTILITY ADJUSTMENT SYMBOLS, SEE FDOT STANDARD INDEX NO. 002

2. ALL EXISTING UTILITIES ARE TO REMAIN UNLESS OTHERWISE NOTED.

3. TWO FULL BUSINESS DAYS PRIOR TO DIGGING THE CONTRACTOR SHALL CALL SUNSHINE STATE ONE CALL OF FLORIDA, TELEPHONE NUMBER 1-800-432-4770, AND THE UTILITY OWNER AND REQUEST UTILITY LOCATIONS. A CONTRACTOR'S REPRESENTATIVE MUST BE PRESENT WHEN UTILITY COMPANIES LOCATE THEIR FACILITIES.

4. THE CONTRACTOR IS ADVISED THAT PROPERTIES ADJACENT TO THE PROJECT HAVE ELECTRIC, TELEPHONE, GAS, WATER AND/OR SEWER SERVICE LATERALS WHICH MAY NOT BE SHOWN IN PLANS. THE CONTRACTOR MUST REQUEST THE LOCATION OF THESE LATERAL SERVICES FROM THE UTILITY COMPANIES. THE COST OF EXCAVATING, INSTALLING, BACKFILLING AND COMPACTING AROUND THESE LATERAL SERVICES MUST BE INCLUDED IN THE BID RELATED ITEM FOR THE WORK BEING DONE.

5. PRE-TRENCHING IN THE ALIGNMENT AND GRADE OF PROPOSED PIPES STRUCTURES, FRENCH DRAINS, SLAB COVERED TRENCHES, CONDUITS, POLE FOUNDATIONS AND/ OR SUB-GRADE SHALL BE PERFORMED SEVEN DAYS IN ADVANCE OF ITS CONSTRUCTION. THE CONTRACTOR SHALL PROVIDE UNDERGROUND UTILITY OWNERS AND THE DEPARTMENT WITH A SEVEN DAYS ADVANCE NOTICE OF ANY CONFLICT WITH PROPOSED CONSTRUCTION. THIS NOTIFICATION SHALL PROVIDE SURVEY INFORMATION ABOUT EXISTING UTILITY ALIGNMENT, GRADE AND POSSIBLE CONFLICTS. PAYMENT FOR PRE-TRENCHING, SURVEY AND BACKFILLING SHALL BE INCLUDED IN THE COST OF THE RELATED BID ITEM FOR THE WORK BEING DONE.

UTILITY OWNERS:

COMPANY	CONTACT	TELEPHONE NO.
ADELPHIA COMMUNICATIONS	MERCEDES ANDERSON	305-238-7690
BROWARD COUNTY OES-WATER SUPPLY	EVA FLORIAN	954-831-0916
COMCAST CABLE	THOMAS CARROLL	954-534-7417
FLORIDA CITY GAS	ALAN WILLIAMS	305-694-6870
CITY OF NORTH MIAMI	NINI BALAURAT	305-787-1006
CITY OF MIRAMAR	HENRY TALTON	954-602-3325
MIAMI DADE COMMUNITY COLLEGE	ROBERT BEALL	305-237-0869
FLORIDA GAS TRANSMISSION CO.	JOSEPH E. SANCHEZ	407-838-7171
FLORIDA POWER AND LIGHT	TRACY STERN	305-442-5966
FPL FIBERNET	NOEL REESE	305-552-3249
MCI	DEAN BOYERS	972-729-6016
MIAMI DADE WATER AND SEWER	PHILLIP TORRES	305-669-7658
XO COMMUNICATIONS	TERESA MILLER	703-547-2000
NORTH MIAMI BEACH PUBLIC WORKS DEPT.	MRS. MARCH	305-948-2967
PEOPLES GAS-MIAMI	ANGEL A. QUANT	305-573-3820
PROGRESS TELECOM	RICHARD SHEILDS	727-471-5336
QWEST COMMUNICATIONS	KIM JORDAN	1-800-283-4237
BELLSOUTH SOUTH BROWARD	AMZI M. POSTEN	954-723-2540
BELLSOUTH	STEVEN B. MASSIE	305-222-8745
TCG SOUTH FLORIDA	BILL HAM	407-578-8000
TRAFFIC CONTROL DEVICES	FRED HORN	407-869-5316
GLOBAL CROSSING COMMUNICATIONS, INC.	BRUCE NACHREINER	954-924-5524
WILTEL COMMUNICATIONS	RUSSELL RYAN	1-888-265-2283
FDOT	HARVEY SHONE	305-470-5458
SFWMD	BEVERLY MILLER	561-682-6979
MIAMI DADE COUNTY PUBLIC WORKS DEPT.	OSCAR RUBIO	305-592-8925
OPA LOCKA	WAYNE EMMONS	786-426-3786
CITY OF MIAMI	FRANCIS MITCHELL	305-416-1218
TELCOVE	TONY KOWALESKI	954-217-6700
XSPEDIUS FIBER GROUP	TOM LEWIS	954-334-0308
DERM	MARIE K. HALL	305-372-6438

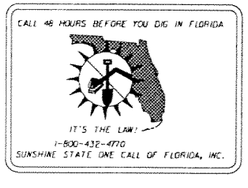

SUBJECT TO CHANGE

W.L.L. Designed by	05-06 Date				
T.W. Drawn by	05-06 Date				
C.V. Checked by	05-02-06 Date				
T.B. Approved by	05-05-06 Date				
		No.	Date	By / Chk	App.

Revisions

NORTH CORRIDOR METRORAIL EXTENSION - PRELIMINARY ENGINEERING (100% SUBMITTAL)

SIGNING AND PAVEMENT MARKINGS

MIAMI-DADE COUNTY

MIAMI-DADE TRANSIT

PARSONS
7600 CORPORATE CENTER DRIVE, SUITE 500
MIAMI, FLORIDA 33126
PHONE: (786) 464-1000 FAX: (786) 845-7119
CERTIFICATE OF AUTHORIZATION NO. 1838

Approved ----- Date -----

BND
CIVIL ENGINEERING • ENVIRONMENTAL • AIRPORT • CONSTRUCTION MANAGEMENT • TRANSPORTATION
1200 NW 78 AVENUE, SUITE 400
MIAMI, FLORIDA 33126 - (305) 599-8495

Approved T. BUDALL, P.E. Date -----

GENERAL NOTES

Scale 1" = 100' Drawing SPM-01 Sheet 4 of 50

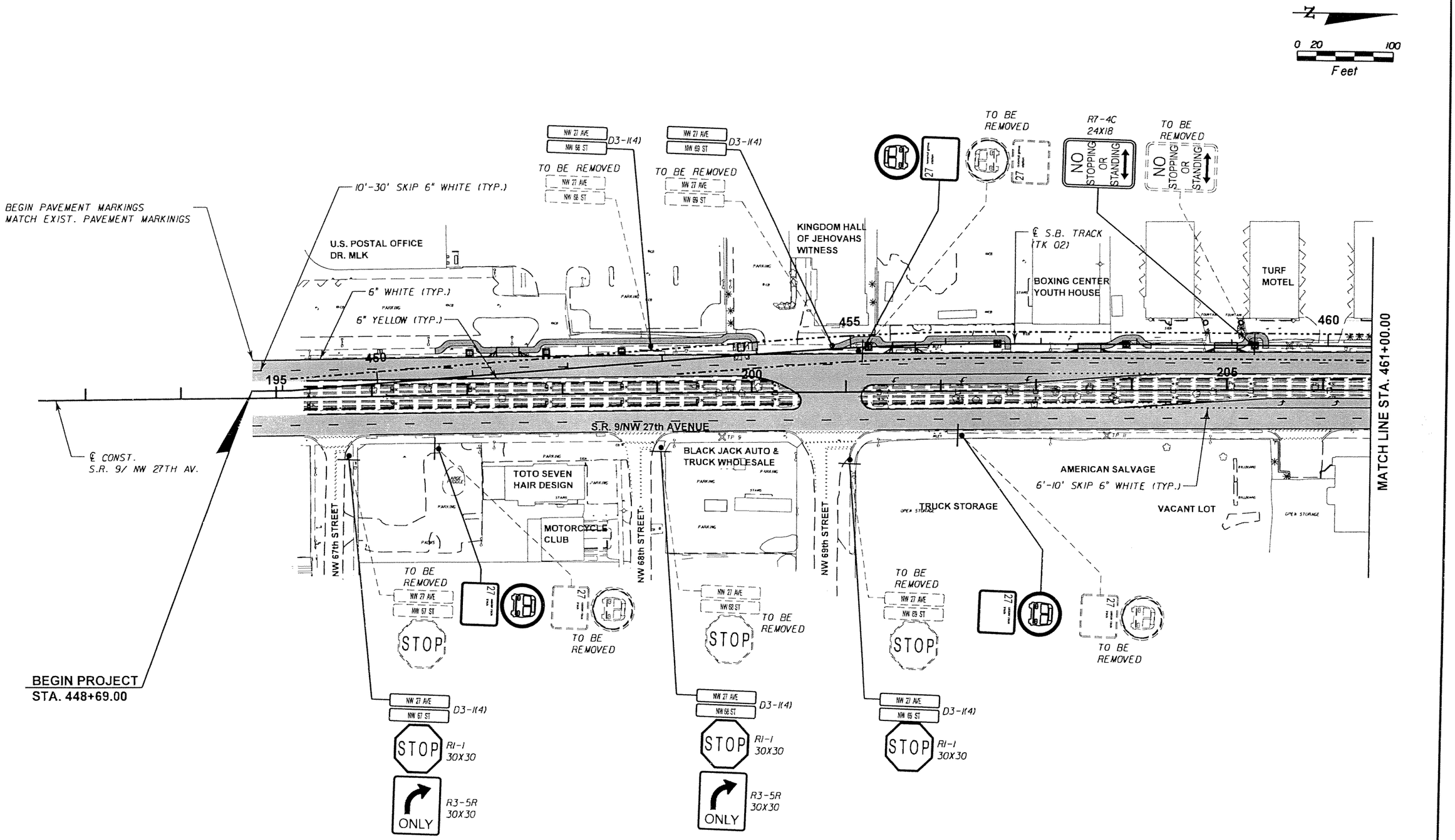

SUBJECT TO CHANGE

W.L.L. Designed by	05-06 Date					
T.W. Drawn by	05-06 Date					
C.V. Checked by	05-02-06 Date					
M.A.B. Approved by	05-05-05 Date	No.	Date	By / Chk	App.	Revisions

NORTH CORRIDOR METRORAIL EXTENSION - PRELIMINARY ENGINEERING (100% SUBMITTAL)

SIGNING AND PAVEMENT MARKINGS

MIAMI-DADE COUNTY

MIAMI-DADE TRANSIT

PARSONS
7600 CORPORATE CENTER DRIVE, SUITE 500
MIAMI, FLORIDA 33126
PHONE: (786) 464-1000 FAX: (786) 845-7119
CERTIFICATE OF AUTHORIZATION NO. 1838

Approved ---- Date ----

BND
CIVIL ENGINEERING • ENVIRONMENTAL • AIRPORT • CONSTRUCTION MANAGEMENT • TRANSPORTATION
1200 NW 78 AVENUE, SUITE 400
MIAMI, FLORIDA 33126 - (305) 599-8495

Approved MICHAEL A. BUDALL, P.E. Date

SIGNING AND PAVEMENT MARKING PLAN

Scale 1" = 100' | Drawing SPM-02 | Sheet 27 of 1

N

0 20 100
Feet

MATCH LINE STA. 461+00.00

MATCH LINE STA. 106+00.00

R1-1 30X30 STOP

D3-1(4) NW 73 ST / NW 72 ST

TO BE REMOVED

D3-1(4) NW 27 AVE / NW 71 ST

TO BE REMOVED

6" YELLOW (TYP.)

6" WHITE (TYP.)

EQUATION: STA 464+51.95
BK = STA 92+04.67 AH

GUS PAINT & BODY SHOP INC.

12" WHITE (TYP.)

℄ CONST. SR.9 / NW 27TH AVE.

S.R. 9/NW 27TH AV. ℄ CONST.

NW 71st STREET

NW 73st STREET

95

℄ S.B. TRACK (TK 02)

R8-8 24X30 DO NOT STOP ON TRACKS

TO BE REMOVED DO NOT STOP ON TRACKS

FESTA TRANSPORT

R2-1 24X30 SPEED LIMIT 35

TO BE REMOVED SPEED LIMIT 35

W10-1 36X36

TO BE REMOVED

R6-1R 36X12 ONE WAY

TO BE REMOVED ONE WAY

3 STORAGE INC.
NW MILL WORKS

100

LA VEGA MOTOR CAR & TRUCKS

FEAT. RAILROAD

210

215

220

S.R. 9/NW 27th AVENUE

105

10'-30' SKIP 6" WHITE (TYP.)

6'-10' SKIP 6" WHITE (TYP.)

VACANT LOT

RO-SA-MAR INC USED CAR

6" WHITE (TYP.)

24" WHITE (TYP.)

PAYLESS CAR SALES

USED CARS

℄ N.B. TRACK (TK 01)

VACANT LOT

REDS SPECIALTY

NW 74th STREET

NW 71st TERRACE

NW 72nd STREET

NW 27 AVE / NW 71 TER STOP TO BE REMOVED

NW 27 AVE / NW 71 TER D3-1(4) STOP R1-1 30X30 ONLY R3-5R 30X30

NW 27 AVE / NW 72 ST D3-1(4) STOP R1-1 30X30 ONLY R3-5R 30X30

STOP TO BE REMOVED

STOP R1-1 30X30

W10-1 15X15

TO BE REMOVED

SPEED LIMIT 35 TO BE REMOVED

SPEED LIMIT 35 R2-1 24X30

ONE WAY TO BE REMOVED

ONE WAY R6-1R 36X12

NO STOPPING OR STANDING TO BE REMOVED

NO STOPPING OR STANDING R7-4C 24X30

DO NOT STOP ON TRACKS TO BE REMOVED

DO NOT STOP ON TRACKS R8-8 24X30

SPEED LIMIT 35 TO BE REMOVED

SPEED LIMIT 35 R2-1 24X30

NO STOPPING OR STANDING R7-4C 24X18

NO STOPPING OR STANDING TO BE REMOVED

SUBJECT TO CHANGE

W.L.L. Designed by	05-06 Date					
T.W. Drawn by	05-06 Date					
C.V. Checked by	05-02-06 Date					
M.A.B. Approved by	05-05-06 Date	No.	Date	By / Chk	App.	Revisions

NORTH CORRIDOR METRORAIL EXTENSION - PRELIMINARY ENGINEERING (100% SUBMITTAL)

MIAMI-DADE COUNTY

MIAMI-DADE TRANSIT

PARSONS
7600 CORPORATE CENTER DRIVE, SUITE 500
MIAMI, FLORIDA 33126
PHONE: (786) 464-1000 FAX: (786) 845-7119
CERTIFICATE OF AUTHORIZATION NO. 1836

BND
CIVIL ENGINEERING · ENVIRONMENTAL · AIRPORT · CONSTRUCTION MANAGEMENT · TRANSPORTATION
1200 NW 78 AVENUE, SUITE 400
MIAMI, FLORIDA 33126 · (305) 599-8495

Approved ----- Date -----

Approved MICHAEL A. BUDALL, P.E. Date

SIGNING AND PAVEMENT MARKINGS

SIGNING AND PAVEMENT MARKING PLAN

Scale 1" = 100' Drawing SPM-02 Sheet 023

N

0 20 100
Feet

END SIGNING & PAVEMENT MARKINGS
MATCH EXISTING PAVEMENT MARKINGS

STA. 234+35.31 ℄ CONST. NW 27 AVE=
STA. 14+02.09 ℄ NW 79TH ST.

℄ CONST.
NW 79 ST.

MATCH LINE STA. 106+00.00

MATCH LINE STA. 120+00.00

℄ S.B. TRACK
(TK 02)
FLY OVER

NW 75th STREET

TO BE REMOVED

R1-1
30X30
STOP

10'-30' SKIP
6" WHITE (TYP.)

6" YELLOW (TYP.)

24" WHITE (TYP.)

TO BE REMOVED

R3-5
30X30
ONLY

R1-1
30X30
STOP

TO BE REMOVED

LANE ENDS
MERGE
LEFT

TO BE REMOVED

M3-3
24X12
SOUTH
9

TO BE REMOVED

SOUTH
9

TO BE REMOVED

RIGHT
LANE
ENDS

TO BE REMOVED

NW 79th STREET

A1A CAR
CENTER INC.

FAMILY
DOLLAR

ROYAL
CASTLE

105
110
225
230
115

S.R. 9/NW 27th AVENUE

VACANT LOT

℄ N.B TRACK
(TK 01)

℄ CONST. S.R. 9/NW 27TH AV.

NW 75th STREET

6'-10' SKIP
6" WHITE (TYP.)

6" DOUBLE
YELLOW (TYP.)

ZEDYS
CABINES
TEL.

TO BE REMOVED

SHOPPING PLAZA

NW 27 AV
NW 71 ST

STOP

TO BE REMOVED

REFLECTIVE YELLOW PAINT (TYP.)

VACANT LOT

TO BE REMOVED

D3-1 (4)
NW 27 AV
NW 71 ST

R1-1
30X30
STOP

R3-5R
30X30
ONLY

END SIGNING & PAVEMENT MARKINGS
MATCH EXISTING PAVEMENT MARKINGS

BEGIN SIGNING & PAVEMENT MARKINGS
MATCH EXISTING PAVEMENT MARKINGS

LA
QUARTER
NIGHT
CLUB

NW 77th STREET

934
JCT

TO BE REMOVED

FTP-17-04
30X24

M2-1
21X15

TRI-RAIL

TO BE REMOVED

M6-1
21X15

FLAT
BUSH
HAIR

6" WHITE
(TYP.)

10'-30' SKIP
6" WHITE (TYP.)

A
AUTO
INS.

BOYS &
GIRLS
DAY
CARE

12" WHITE
(TYP.)

M6-1 (2)
21X15

934
WEST
EAST

TO BE REMOVED

M3-4
24X12

M3-2
24X12

FTP-17-04 (2)
30X24

12" WHITE (TYP.)

24" WHITE (TYP.)

NW 79th STREET

END SIGNING & PAVEMENT MARKINGS
MATCH EXISTING PAVEMENT MARKINGS

SUBJECT TO CHANGE

W.L.L.	05-06					
Designed by	Date					
T.W.	05-06					
Drawn by	Date					
C.V.	05-02-06					
Checked by	Date					
M.A.B.	05-05-06					
Approved by	Date	No.	Date	By / Chk.	App.	Revisions

NORTH CORRIDOR METRORAIL EXTENSION - PRELIMINARY ENGINEERING (100% SUBMITTAL)

SIGNING AND PAVEMENT MARKINGS

MIAMI-DADE COUNTY

MIAMI-DADE TRANSIT

PARSONS
7600 CORPORATE CENTER DRIVE, SUITE 500
MIAMI, FLORIDA 33126
PHONE: (786) 464-1000 FAX: (786) 845-7119
CERTIFICATE OF AUTHORIZATION NO. 1838

Approved ----- Date -----

BND
CIVIL ENGINEERING • ENVIRONMENTAL • AIRPORT • CONSTRUCTION MANAGEMENT • TRANSPORTATION
1200 NW 78 AVENUE, SUITE 400
MIAMI, FLORIDA 33126 - (305) 599-8495

Approved MICHAEL A. BUDALL, P.E. Date -----

SIGNING AND PAVEMENT MARKING PLAN

Scale 1" = 100' | Drawing SPM-04 | Sheet 4 of 12

SUBJECT TO CHANGE

W.L.L.	05-06	Designed by / Date
T.W.	05-06	Drawn by / Date
C.V.	05-02-06	Checked by / Date
M.A.B.	05-05-06	Approved by / Date

No. | Date | By / Chk | App. | Revisions

NORTH CORRIDOR METRORAIL EXTENSION - PRELIMINARY ENGINEERING (100% SUBMITTAL)

MIAMI-DADE COUNTY

MIAMI-DADE TRANSIT

PARSONS
7600 CORPORATE CENTER DRIVE, SUITE 500
MIAMI, FLORIDA 33126
PHONE: (786) 464-1000 FAX: (786) 845-7119
CERTIFICATE OF AUTHORIZATION NO. 1838
Approved | Date

BND
CIVIL ENGINEERING • ENVIRONMENTAL • AIRPORT • CONSTRUCTION MANAGEMENT • TRANSPORTATION
1200 NW 78 AVENUE, SUITE 400
MIAMI, FLORIDA 33126 - (305) 599-8495
Approved MICHAEL A. BUDALL, P.E. | Date

SIGNING AND PAVEMENT MARKINGS

SIGNING AND PAVEMENT MARKING PLAN

Scale 1" = 100' | Drawing SPM-05 | Sheet 484

NW 82ND STREET STATION
(FOR ADDITIONAL INFORMATION
REFER TO ARCHITECTURAL
AND STRUCTURAL PLANS)

END SIGNING & PAVEMENT MARKINGS
MATCH EXISTING PAVEMENT MARKINGS

8" YELLOW (TYP.)
18" YELLOW (TYP.)
6" DOUBLE YELLOW (TYP.)
6" WHITE (TYP.)

N
0 20 100
Feet

NO STOPPING OR STANDING R7-4C 24X18
ONLY R3-5R 30X36
STOP R1-1 30X30
TO BE REMOVED
NO STOPPING OR STANDING
ONLY
STOP
6'-10' SKIP 6" WHITE (TYP.)
12" WHITE (TYP.)
NW 84th STREET
℄ CONST. 84TH ST.
REFLECTIVE YELLOW PAINT
WACHOVIA
PAWN SHOP
FIRESTONE
S.R. 9/NW 27TH AV. ℄ CONST.
R7-4A 24X18
NO STOPPING OR STANDING
METRO-DADE POLICE DEPT STATION 2
DEPARTMENT OF HUMAN RESOURCES
UNITED HOUSE OF PRAYER FOR ALL PEOPLE
CHUCHO AUTO REPAIR
RADIATOR'S US
18" WHITE (TYP.)
8" WHITE
R10-11A 24X30
NO TURN ON RED
DO NOT TURN ON RED
W16-7D 24X12
S1-1 30X30
NW 87th STREET
U-GAS
DAIRY QUEEN
MATCH LINE STA. 134+00.00
MATCH LINE STA. 148+00.00
250
255
135
140
145
260
10
STA. 251+34.61 ℄ CONST. NW 27 AVE. = STA. 14+22.97 ℄ CONST. NW 84 ST.
24" WHITE (TYP.)
SAVACON
RESIDENTIAL
URBAN LEAGUE OF GREATER MIAMI
10'-30' 6" SKIP 6" WHITE
℄ N.B. TRACK (TK 01)
℄ S.B. TRACK (TK 02)
6'-10' SKIP 6" WHITE (TYP.)
6" YELLOW (TYP.)
6" WHITE (TYP.)
W16-9D 24X12
AHEAD
S1-1 30X30
END SIGNING & PAVEMENT MARKINGS MATCH EXISTING PAVEMENT MARKINGS
STA. 261+24.51 ℄ CONST. NW 27 AVE. = STA. 12+00.45 ℄ CONST. NW 87 ST.
℄ CONST. NW 87 ST.
R7-4C 24X18
W16-7P 24X12
S1-1 30X30

SUBJECT TO CHANGE

W.L.L. Designed by	05-06 Date					
T.W. Drawn by	05-06 Date					
C.V. Checked by	05-02-06 Date					
M.A.B. Approved by	05-05-06 Date	No.	Date	By Chk	App.	Revisions

NORTH CORRIDOR METRORAIL EXTENSION - PRELIMINARY ENGINEERING (100% SUBMITTAL)

MIAMI-DADE COUNTY
MIAMI-DADE TRANSIT

PARSONS
7600 CORPORATE CENTER DRIVE, SUITE 500
MIAMI, FLORIDA 33126
PHONE: (786) 464-1000 FAX: (786) 845-7119
CERTIFICATE OF AUTHORIZATION NO. 1638
Approved ----- Date -----

BND
CIVIL ENGINEERING • ENVIRONMENTAL • AIRPORT • CONSTRUCTION MANAGEMENT • TRANSPORTATION
1200 NW 78 AVENUE, SUITE 400
MIAMI, FLORIDA 33126 - (305) 599-8495
Approved MICHAEL A. BUDALL, P.E. Date -----

SIGNING AND PAVEMENT MARKINGS

SIGNING AND PAVEMENT MARKING PLAN

Scale 1" = 100' | Drawing SPM-06 | Sheet 145

N

0 20 100
Feet

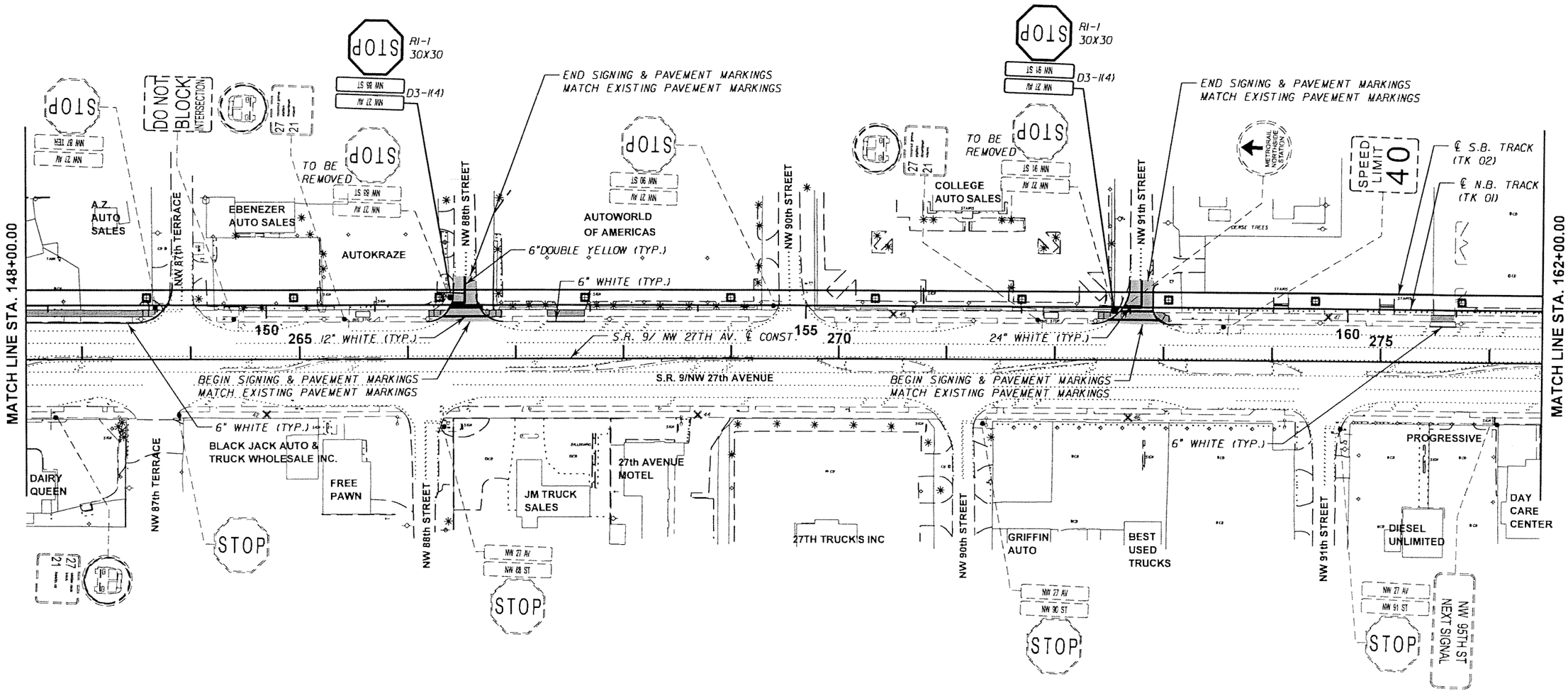

SUBJECT TO CHANGE

W.L.L. Designed by	05-06 Date					
T.W. Drawn by	05-06 Date					
C.V. Checked by	05-02-06 Date					
M.A.B. Approved by	05-05-06 Date	No.	Date	By / Chk	App.	Revisions

NORTH CORRIDOR METRORAIL EXTENSION - PRELIMINARY ENGINEERING (100% SUBMITTAL)

SIGNING AND PAVEMENT MARKINGS

MIAMI-DADE COUNTY

MIAMI-DADE TRANSIT

PARSONS
7600 CORPORATE CENTER DRIVE, SUITE 500
MIAMI, FLORIDA 33126
PHONE: (786) 464-1000 FAX: (786) 845-7119
CERTIFICATE OF AUTHORIZATION NO. 1838
Approved Date

BND
CIVIL ENGINEERING • ENVIRONMENTAL • AIRPORT • CONSTRUCTION MANAGEMENT • TRANSPORTATION
1200 NW 78 AVENUE, SUITE 400
MIAMI, FLORIDA 33126 - (305) 599-8495
Approved MICHAEL A. BUDALL, P.E. Date

SIGNING AND PAVEMENT MARKING PLAN

Scale 1" = 100' | Drawing SPM-07 | Sheet

N

0 20 100
Feet

MATCH LINE STA. 162+00.00

MATCH LINE STA. 176+00.00

STOP
R1-1
30X30
NW 94 ST
NW 27 AV
D3-1(4)

NO STOPPING ANY TIME

27
21

STOP
NW 93 ST
NW 27 AV

SOUTH
9

TO BE REMOVED

STOP
NW 94 ST
NW 27 AV

END SIGNING & PAVEMENT MARKING
MATCH EXISTING PAVEMENT MARKING

6" DOUBLE YELLOW (TYP.)

SPEED LIMIT 40

DO NOT BLOCK INTERSECTION

RIGHT TURN ONLY
STOP
NW 95 TER
NW 27 AV

VACANT LOT

NW 93rd STREET

SUPERCAR

DENSE TREES

INTERSTATE BLOOD BANK

FAMILY DOLLAR

NW 94th STREET

PRICE CHOICE FOOD MARKET

℄ S.B. TRACK (TK 02)

℄ N.B. TRACK (TK 01)

6" WHITE (TYP.)

NW 95th STREET

SMYTHS

STEPHENS CERTIFIED PUBLIC SCALE

WESTERN UNION

NW 95th TERRACE

165 280

12" WHITE (TYP.)
24" WHITE (TYP.)

170 285

S.R. 9/NW 27th AV.
℄ CONST.

175 290

BEGIN SIGNING & PAVEMENT MARKINGS
MATCH EXISTING PAVEMENT MARKINGS

S.R. 9/NW 27th AVENUE

6" WHITE (TYP.)

ADVANCE AUTO PARTS

NW 92nd STREET

NICA MOTORS

ARRIOLA AUTO SALES CORP.

NW 93rd STREET

NW 93rd TERRACE

K & L AUTO

AUTO PIEZAS USA

ARRIOILA AUTO SALES

RIGHT LANE MUST TURN RIGHT

F.R.C. AUTO SALES

NW 95th STREET

SHOPPING PLAZA

LIBRARY

SPEED LIMIT 40

NW 27 AV
NW 92 ST
STOP

NW 27 AV
NW 93 ST
STOP

NW 27 AV
NW 93 TERR
STOP

RIGHT TURN ONLY

DO NOT ENTER

ONE WAY

SUBJECT TO CHANGE

W.L.L. Designed by	05-06 Date					
T.W. Drawn by	05-06 Date					
C.V. Checked by	05-02-06 Date					
M.A.B. Approved by	05-05-06 Date	No.	Date	By / Chk	App.	Revisions

NORTH CORRIDOR METRORAIL EXTENSION - PRELIMINARY ENGINEERING (100% SUBMITTAL)

SIGNING AND PAVEMENT MARKINGS

MIAMI-DADE COUNTY

MIAMI-DADE TRANSIT

PARSONS
7600 CORPORATE CENTER DRIVE, SUITE 500
MIAMI, FLORIDA 33126
PHONE: (786) 464-1000 FAX: (786) 845-7119
CERTIFICATE OF AUTHORIZATION NO. 1838

Approved

Date

BND
CIVIL ENGINEERING • ENVIRONMENTAL • AIRPORT • CONSTRUCTION MANAGEMENT • TRANSPORTATION
1200 NW 78 AVENUE, SUITE 400
MIAMI, FLORIDA 33126 - (305) 599-8495

Approved MICHAEL A. BUDALL, P.E.

Date

SIGNING AND PAVEMENT MARKING PLAN

Scale 1" = 100'

Drawing SPM-08

Sheet

0 20 100
Feet

END SIGNING & PAVEMENT MARKINGS
MATCH EXISTING PAVEMENT MARKINGS

MATCH LINE STA. 176+00.00

NW 95TH ST NEXT SIGNAL
LEFT LANE MUST TURN LEFT
STOP NW 96 ST / NW 27 AV
LIBRARY
STOP NW 97 ST / NW 27 AV
STOP RI-1 30X30 NW 96 ST / NW 27 AV D3-1(4)
STOP NW 27 AV
STOP RI-1 30X30 NW 96 ST / NW 27 AV D3-1(4)
STOP NW 96 ST / NW 27 AV
℄ S.B. TRACK (TK 02)
℄ N.B. TRACK (TK 01)

NORTH CENTRAL BRANCH LIBRARY
NW 96th STREET
TONY'S SW IMPORT CAR SALES
VACANT LOT
DENSE TREES
CANO MOTORS
6" WHITE (TYP.)
NW 97th STREET
VACANT LOT
6" WHITE (TYP.)
BENNY'S TRUCK SALE
NW 98th STREET
PREFERRED AUTO ENTERPRISE
RUCHI TRUCKSALE
NW 99th STREET
SHOPPING PLAZA

180 295
S.R. 9/ NW 27TH AV. ℄ CONST.
185 300
S.R. 9/NW 27th AVENUE
BEGIN SIGNING & PAVEMENT MARKINGS
MATCH EXISTING PAVEMENT MARKINGS

MATCH LINE STA. 190+00.00

BEST PRICE AUTO SALES
CARRIBEAN MOTORS INC.
DENSE TREES
AMER CORP. AUTO SALES
NO TURNS
NW 97th STREET
SHOPPING PLAZA
NW 27 AV / NW 97 ST
STOP
CANO MOTORS
BENJI MOTORS
NW 99th STREET
GENERAL AUTO CREDIT
AL'S TROPICAL CARS
ELITE
NW 27 AV / NW 99 ST
STOP

SUBJECT TO CHANGE

W.L.L. Designed by	05-06 Date					
T.W. Drawn by	05-06 Date					
C.V. Checked by	05-02-06 Date					
M.A.B. Approved by	05-05-06 Date	No.	Date	By / Chk	App.	Revisions

NORTH CORRIDOR METRORAIL EXTENSION - PRELIMINARY ENGINEERING (100% SUBMITTAL)

MIAMI-DADE COUNTY
MIAMI-DADE TRANSIT

PARSONS
7600 CORPORATE CENTER DRIVE, SUITE 500
MIAMI, FLORIDA 33126
PHONE: (786) 464-1000 FAX: (786) 845-7119
CERTIFICATE OF AUTHORIZATION NO. 1838
Approved Date

BND
CIVIL ENGINEERING • ENVIRONMENTAL • AIRPORT • CONSTRUCTION MANAGEMENT • TRANSPORTATION
1200 NW 78 AVENUE, SUITE 400
MIAMI, FLORIDA 33126 - (305) 599-8495
Approved MICHAEL A. BUDALL, P.E. Date

SIGNING AND PAVEMENT MARKINGS

SIGNING AND PAVEMENT MARKING PLAN

Scale 1" = 100' | Drawing SPM-09 | Sheet 4959

N

0 20 100
Feet

END SIGNING & PAVEMENT MARKINGS MATCH EXISTING PAVEMENT MARKINGS

END SIGNING AND PAVEMENT MARKINGS MATCH EXISTING PAVEMENT MARKINGS

END SIGNING & PAVEMENT MARKINGS MATCH EXISTING PAVEMENT MARKINGS

R1-1 30X30 STOP

D3-1(4) NW 100 ST / NW 27 AV

TO BE REMOVED STOP

6" DOUBLE YELLOW (TYP.)

℄ N.B. TRACK (TK 01)

℄ S.B. TRACK (TK 02)

NW 100th STREET

NW 101st STREET

NW 102nd STREET

NW 103rd STREET

NEW IMAGE MOTORS

SUN # 1 AUTO SALES

LA CARIDAD HARWARE

BAHIA HONDA SUPERMARKET

PAWN SHOP

R5-2A NO THRU TRUCKS

TO BE REMOVED NO THRU TRUCKS

SHOPPING PLAZA

R3-5 30X36 ONLY

SPEED LIMIT 40

PUBLIC AUTO SALE

SOUTH 9

10

WEST EAST 932

RIGHT LANE MUST TURN RIGHT

SHELL

BAILEY FURNITURE

FLIPPER MARINE

MATCH LINE STA. 190+00.00

190 305

195 310

200 315

MATCH LINE STA. 204+00.00

24" WHITE (TYP.)

12" WHITE (TYP.)

6" WHITE (TYP.)

BEGIN SIGNING & PAVEMENT MARKINGS MATCH EXISITING PAVEMENT MARKINGS

S.R. 9/NW 27TH AVENUE

BEGIN SIGNING & PAVEMENT MARKINGS MATCH EXISTING PAVEMENT MARKINGS

STA. 314+81.00 ℄ CONST. NW 27 AVE = STA. 12+19.92 ℄ CONST. NW 103 ST.

S.R. 9/NW 27TH AV ℄ CONST.

R & R CARS

JAPANESE AUTO SALES

FIRST CAPITAL AUTO

SHOPPING PLAZA

MIAMI VANS & TRUCKS

MOBIL GAS STATION

NW 27 AV / NW 101 ST STOP

JCT 932

SPEED LIMIT 40

WEST EAST 932

SPEED LIMIT 40

NO PARKING ANY TIME

BENJI AUTO SALES

SHOPPING PLAZA

℄ CONST. NW 103 ST.

SUBJECT TO CHANGE

W.L.L. Designed by	05-06 Date					
T.W. Drawn by	05-06 Date					
C.V. Checked by	05-02-06 Date					
M.A.B. Approved by	05-05-06 Date	No.	Date	By / Chk	App.	Revisions

NORTH CORRIDOR METRORAIL EXTENSION - PRELIMINARY ENGINEERING (100% SUBMITTAL)

SIGNING AND PAVEMENT MARKINGS

MIAMI-DADE COUNTY

MIAMI-DADE TRANSIT

PARSONS
7600 CORPORATE CENTER DRIVE, SUITE 500
MIAMI, FLORIDA 33126
PHONE: (786) 464-1000 FAX: (786) 845-7119
CERTIFICATE OF AUTHORIZATION NO. 1638

Approved ----- Date -----

BND
CIVIL ENGINEERING • ENVIRONMENTAL • AIRPORT • CONSTRUCTION MANAGEMENT • TRANSPORTATION
1200 NW 78 AVENUE, SUITE 400
MIAMI, FLORIDA 33126 • (305) 599-8495

Approved MICHAEL A. BUDALL, P.E. Date

SIGNING AND PAVEMENT MARKING PLAN

Scale 1" = 100' | Drawing SPM 10 | Sheet 1128

N

0 20 100
Feet

MATCH LINE STA. 204+00.00

MATCH LINE STA. 218+00.00

EAST 932

SOUTH 9

NORTH 6

STOP R1-1 30X30

NW 106 ST / NW 27 AV

D3-1(4)

TO BE REMOVED STOP

NW 103RD ST NEXT SIGNAL

27 21

END SIGNING & PAVEMENT MARKINGS MATCH EXISTING PAVENT MARKINGS

6" DOUBLE YELLOW (TYP.)

12" WHITE (TYP.)

BEGIN SIGNING & PAVEMENT MARKINGS MATCH EXISTING PAVEMENT MARKINGS

24" WHITE (TYP.)

℄ S.B. TRACK (TK 02)

℄ N.B. TRACK (TK 01)

NW 106th STREET

C-7 CANAL

C-7 WATER MANAGEMENT

S.R. 9/NW 27TH AV ℄ CONST.

S.R. 9/NW 27th AVENUE

NW 104th TERRACE

NW 105th TERRACE

NW 106th STREET

NW 107th STREET

NW 108th STREET

FLIPPER MARINE

JK AUTO SALES

SOLARS AUTO SALES

G&G QUALITY AUTO SALES

RENTAL COMMUNITY

CENTRAL RECEIVING MAINTENANCE MIAMI DADE COLLEGE

MARINE WORLD

JK AUTO SALES

JOSEPHS TIRES

TOMMY CYCLE

NATHALY AUTO SALES

KAR CONNECTION

MCDONALDS

NO THRU TRUCKS

NO OUTLET

205 320 210 215 325 330

SUBJECT TO CHANGE

W.L.L. Designed by	05-06 Date				
T.W. Drawn by	05-06 Date				
C.V. Checked by	05-02-06 Date				
M.A.B. Approved by	05-05-06 Date	No.	Date	By / Chk	App. Revisions

NORTH CORRIDOR METRORAIL EXTENSION - PRELIMINARY ENGINEERING (100% SUBMITTAL)

SIGNING AND PAVEMENT MARKINGS

MIAMI-DADE COUNTY

MIAMI-DADE TRANSIT

PARSONS
7600 CORPORATE CENTER DRIVE, SUITE 500
MIAMI, FLORIDA 33126
PHONE: (786) 464-1000 FAX: (786) 845-7119
CERTIFICATE OF AUTHORIZATION NO. 1838
Approved Date

BND
CIVIL ENGINEERING • ENVIRONMENTAL • AIRPORT • CONSTRUCTION MANAGEMENT • TRANSPORTATION
1200 NW 78 AVENUE, SUITE 400
MIAMI, FLORIDA 33126 - (305) 599-8495
Approved MICHAEL A. BUDALL, P.E. Date

SIGNING AND PAVEMENT MARKING PLAN

Scale 1" = 100' | Drawing SPM-11 | Sheet 4 of 9

0 20 100
Feet

MIAMI-DADE COLLEGE (NORTH CAMPUS)

LOT 3

MIAMI-DADE COLLEGE (NORTH CAMPUS)

MIAMI-DADE COLLEGE (NORTH CAMPUS)

RI-3 12X6 4-WAY
RI-1 30X30 STOP
TO BE REMOVED 4-WAY STOP
TO BE REMOVED 4-WAY STOP
TO BE REMOVED STOP 4-WAY
RI-1 30X30 STOP 4-WAY
RI-3 12X6
TO BE REMOVED
RI-1 30X30 STOP
TO BE REMOVED STOP
STOP FOR PEDESTRIAN IN CROSSWALK
TO BE REMOVED STOP FOR PEDESTRIAN IN CROSSWALK
NO PARKING THIS BLOCK
TO BE REMOVED NO PARKING THIS BLOCK
LOT 1
STADIUM DRIVE
NW 110th STREET
℄ N.B. TRACK (TK 01)
℄ S.B. TRACK (TK 02)
BEGIN SIGNING & PAVEMENT MARKINGS MATCH EXISTING PAVEMENT MARKINGS
MATCH LINE STA. 218+00.00
MATCH LINE STA. 232+00.00
10
15
220
225
230
EAST ROAD
℄ CONST. EAST RD
6" YELLOW (TYP.)
10'-30' SKIP 6" WHITE (TYP.)
6" WHITE (TYP.)
SPECIAL EMPHASIS CROSSWALK AS PER FDOT INDEX 17346 (TYP.)
TO BE REMOVED
STADIUM DR EAST RD
D3-1 (4)
SPEED LIMIT 20
R2-1 24X30
LOT 18
LOT 2
STOP TO BE REMOVED
RI-1 30X30

* END SIGNING & PAVEMENT MARKINGS
MATCH EXISTING PAVEMENT MARKINGS

SUBJECT TO CHANGE

W.L.L.	05-06					
Designed by	Date					
T.W.	05-06					
Drawn by	Date					
C.V.	05-02-06					
Checked by	Date					
M.A.B.	05-05-06					
Approved by	Date	No.	Date	By / Chk	App.	Revisions

NORTH CORRIDOR METRORAIL EXTENSION - PRELIMINARY ENGINEERING (100% SUBMITTAL)

MIAMI-DADE COUNTY
MIAMI-DADE TRANSIT

PARSONS
7600 CORPORATE CENTER DRIVE, SUITE 500
MIAMI, FLORIDA 33126
PHONE: (786) 464-1000 FAX: (786) 845-7119
CERTIFICATE OF AUTHORIZATION NO. 1838
Approved Date

BND
CIVIL ENGINEERING • ENVIRONMENTAL • AIRPORT • CONSTRUCTION MANAGEMENT • TRANSPORTATION
1200 NW 78 AVENUE, SUITE 400
MIAMI, FLORIDA 33126 - (305) 599-8495
Approved MICHAEL A. BUDALL, P.E. Date

SIGNING AND PAVEMENT MARKINGS

SIGNING AND PAVEMENT MARKING PLAN

Scale 1" = 100' | Drawing SPM-12 | Sheet 041

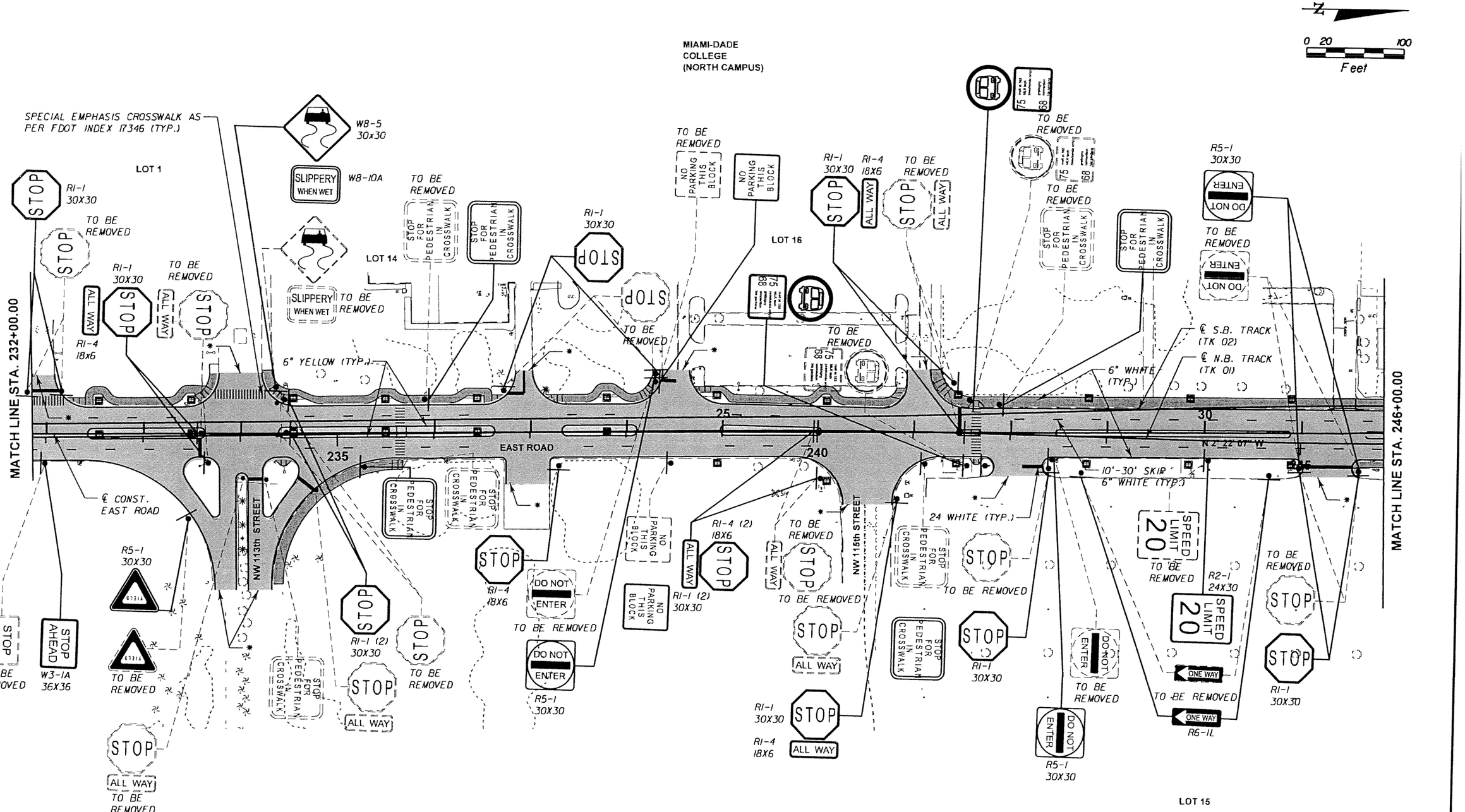

SUBJECT TO CHANGE

W.L.L. Designed by	05-06 Date					
T.W. Drawn by	05-06 Date					
C.V. Checked by	05-02-06 Date					
M.A.B. Approved by	05-05-06 Date	No.	Date	By / Chk	App.	Revisions

NORTH CORRIDOR METRORAIL EXTENSION - PRELIMINARY ENGINEERING (100% SUBMITTAL)

MIAMI-DADE COUNTY — MIAMI-DADE TRANSIT

PARSONS
7600 CORPORATE CENTER DRIVE, SUITE 500
MIAMI, FLORIDA 33126
PHONE: (786) 464-1000 FAX: (786) 845-7119
CERTIFICATE OF AUTHORIZATION NO. 1838
Approved _____ Date _____

BND
CIVIL ENGINEERING • ENVIRONMENTAL • AIRPORT • CONSTRUCTION MANAGEMENT • TRANSPORTATION
1200 NW 78 AVENUE, SUITE 400
MIAMI, FLORIDA 33126 • (305) 599-8495
Approved MICHAEL A. BUDALL, P.E. Date _____

SIGNING AND PAVEMENT MARKINGS

SIGNING AND PAVEMENT MARKING PLAN

Scale 1" = 100' | Drawing SPM-13 | Sheet U87

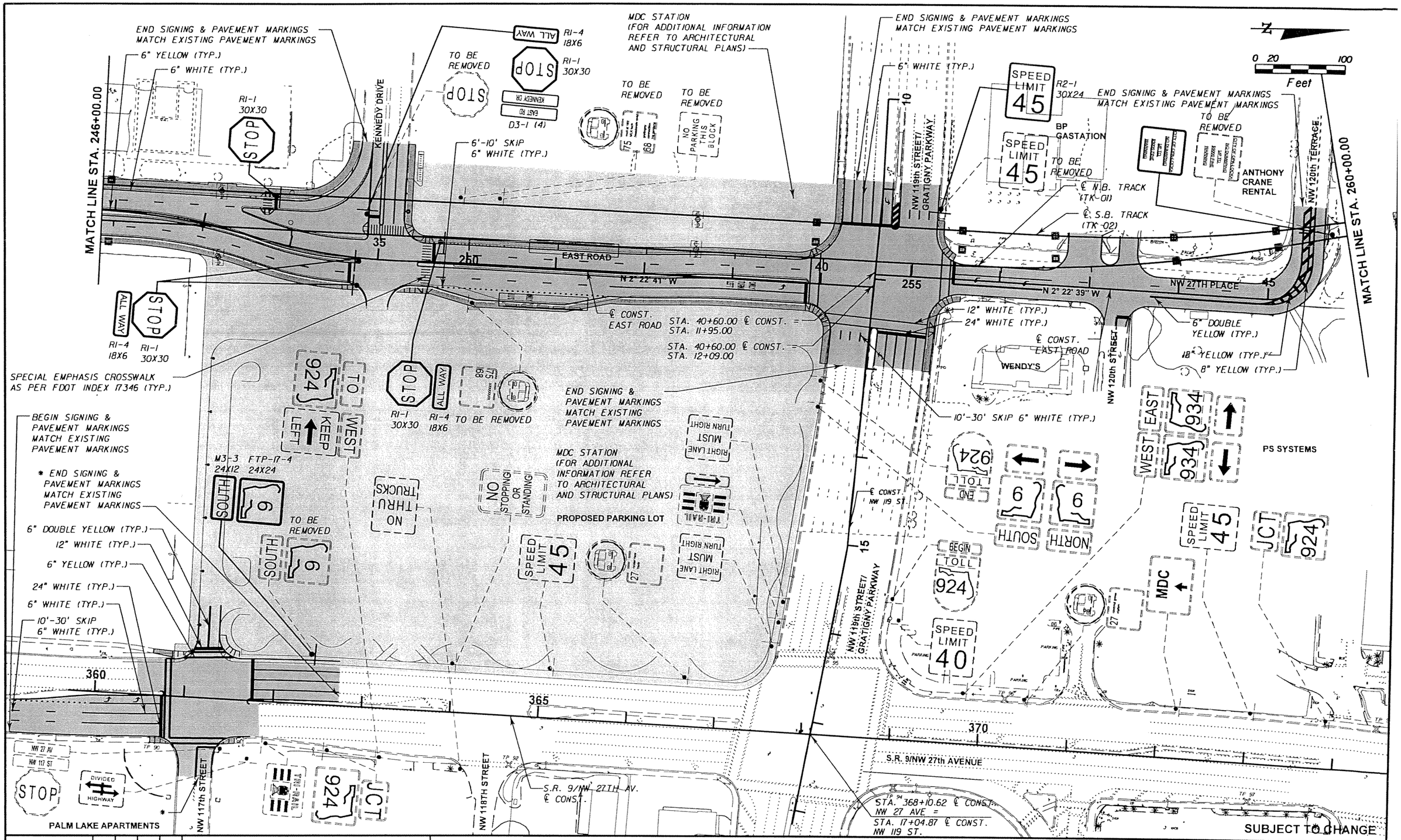

W.L.L. Designed by	05-06 Date					
T.W. Drawn by	05-06 Date					
C.V. Checked by	05-02-06 Date					
M.A.B. Approved by	05-05-06 Date	No.	Date	By / Chk	App.	Revisions

NORTH CORRIDOR METRORAIL EXTENSION - PRELIMINARY ENGINEERING (100% SUBMITTAL)

MIAMI-DADE COUNTY

MIAMI-DADE TRANSIT

PARSONS
7600 CORPORATE CENTER DRIVE, SUITE 500
MIAMI, FLORIDA 33126
PHONE: (786) 464-1000 FAX: (786) 845-7119
CERTIFICATE OF AUTHORIZATION NO. 1838

Approved ____ Date ____

BND
CIVIL ENGINEERING • ENVIRONMENTAL • AIRPORT • CONSTRUCTION MANAGEMENT • TRANSPORTATION
1200 NW 78 AVENUE, SUITE 400
MIAMI, FLORIDA 33126 - (305) 599-8495

Approved MICHAEL A. BUDALL, P.E. Date ____

SIGNING AND PAVEMENT MARKINGS

SIGNING AND PAVEMENT MARKING PLAN

Scale 1" = 100' Drawing SPM-14 Sheet 492

0 20 100
Feet

GFS
GORDON
FOOD
SERVICES

COUNTY WIDE
OF MIAMI

NW 28 AVE
NW 122 ST
STOP

GOLD COAST
FREIGHTWAYS

STOP
NW 123 ST
NW 28 AVE

NW 123nd STREET

NO STANDING OR STOPPING

℄ N.B. TRACK
(TK 01)

℄ S.B. TRACK
(TK 02)

NW 28th AVENUE

MATCH LINE STA. 260+00.00

260

265

270

MATCH LINE STA. 274+00.00

DADE COUNTY
BUS PARKING

2780
WAREHOUSES

NW 122nd STREET

MDC P.S
JOHN H. SCHEE
TRANSPORTATION CENTER

ARROW
TRANSPORTATION
SERVICES

SPEED LIMIT 15

NO STANDING OR STOPPING

MIAMI-DADE COUNTY
MAINTENANCE YARD

SUBJECT TO CHANGE

W.L.L. Designed by	05-06 Date					
T.W. Drawn by	05-06 Date					
C.V. Checked by	05-02-06 Date					
M.A.B. Approved by	05-05-06 Date	No.	Date	By / Chk	App.	Revisions

NORTH CORRIDOR METRORAIL EXTENSION - PRELIMINARY ENGINEERING (100% SUBMITTAL)

SIGNING AND PAVEMENT MARKINGS

MIAMI-DADE COUNTY
MIAMI-DADE TRANSIT

PARSONS
7600 CORPORATE CENTER DRIVE, SUITE 500
MIAMI, FLORIDA 33126
PHONE: (786) 464-1000 FAX: (786) 845-7119
CERTIFICATE OF AUTHORIZATION NO. 1838

BND
CIVIL ENGINEERING • ENVIRONMENTAL • AIRPORT • CONSTRUCTION MANAGEMENT • TRANSPORTATION
1200 NW 78 AVENUE, SUITE 400
MIAMI, FLORIDA 33126 - (305) 599-8495

Approved _____ Date _____

Approved MICHAEL A. BUDALL, P.E. Date _____

SIGNING AND PAVEMENT MARKING PLAN

Scale 1" = 100' | Drawing SPM-15 | Sheet 494

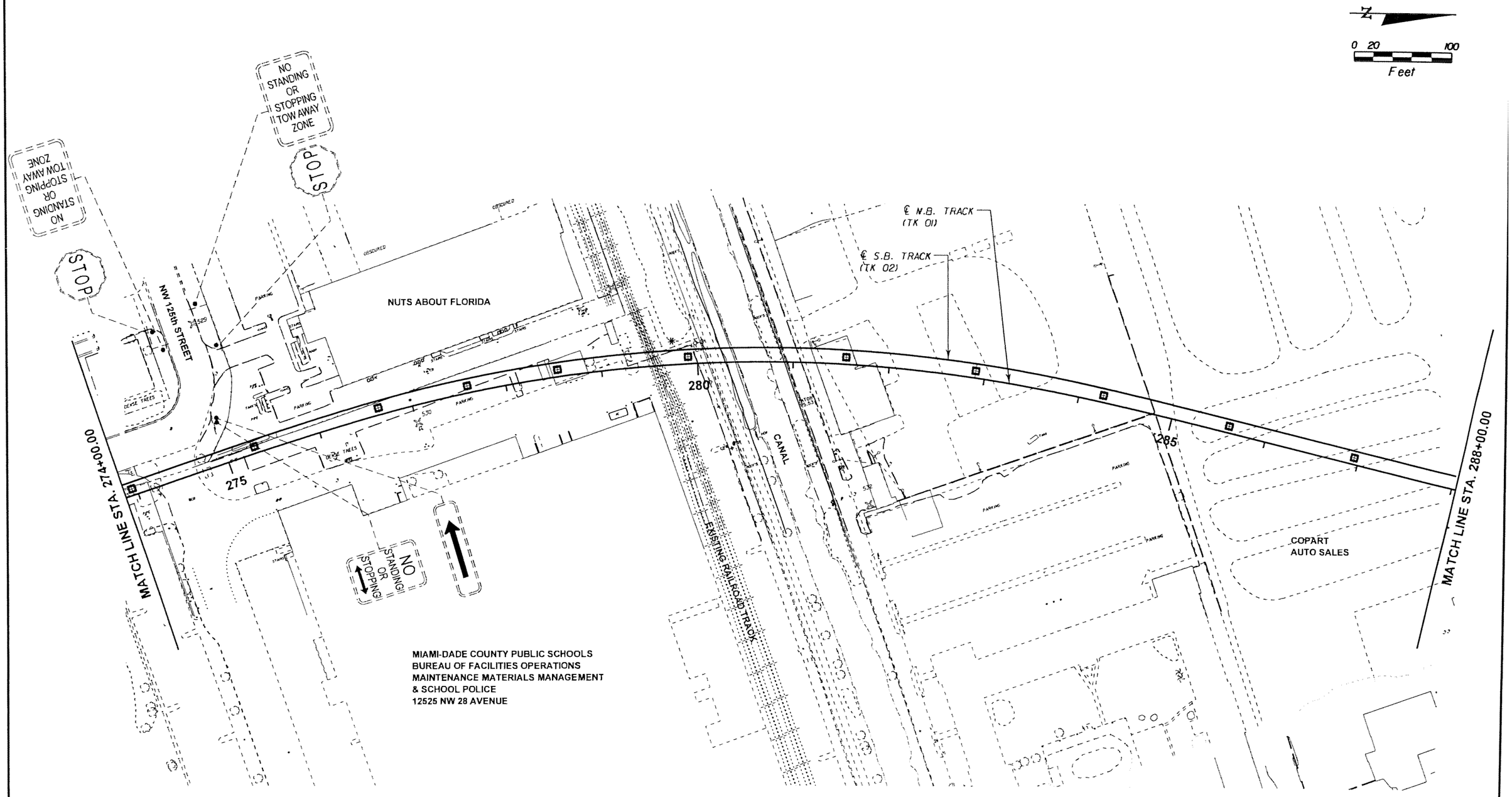

SUBJECT TO CHANGE

W.L.L. Designed by	05-06 Date					
T.W. Drawn by	05-06 Date					
C.V. Checked by	05-02-06 Date					
M.A.B. Approved by	05-05-06 Date	No.	Date	By / Chk	App.	Revisions

NORTH CORRIDOR METRORAIL EXTENSION - PRELIMINARY ENGINEERING (100% SUBMITTAL)

SIGNING AND PAVEMENT MARKINGS

MIAMI-DADE COUNTY

MIAMI-DADE TRANSIT

PARSONS
7600 CORPORATE CENTER DRIVE, SUITE 500
MIAMI, FLORIDA 33126
PHONE: (786) 464-1000 FAX: (786) 845-7119
CERTIFICATE OF AUTHORIZATION NO. 1838

Approved ____ Date ____

BND
CIVIL ENGINEERING • ENVIRONMENTAL • AIRPORT • CONSTRUCTION MANAGEMENT • TRANSPORTATION
1200 NW 78 AVENUE, SUITE 400
MIAMI, FLORIDA 33126 - (305) 599-8495

Approved MICHAEL A. BUDALL, P.E. Date ____

SIGNING AND PAVEMENT MARKING PLAN

Scale 1" = 100' | Drawing SPM-16 | Sheet 49

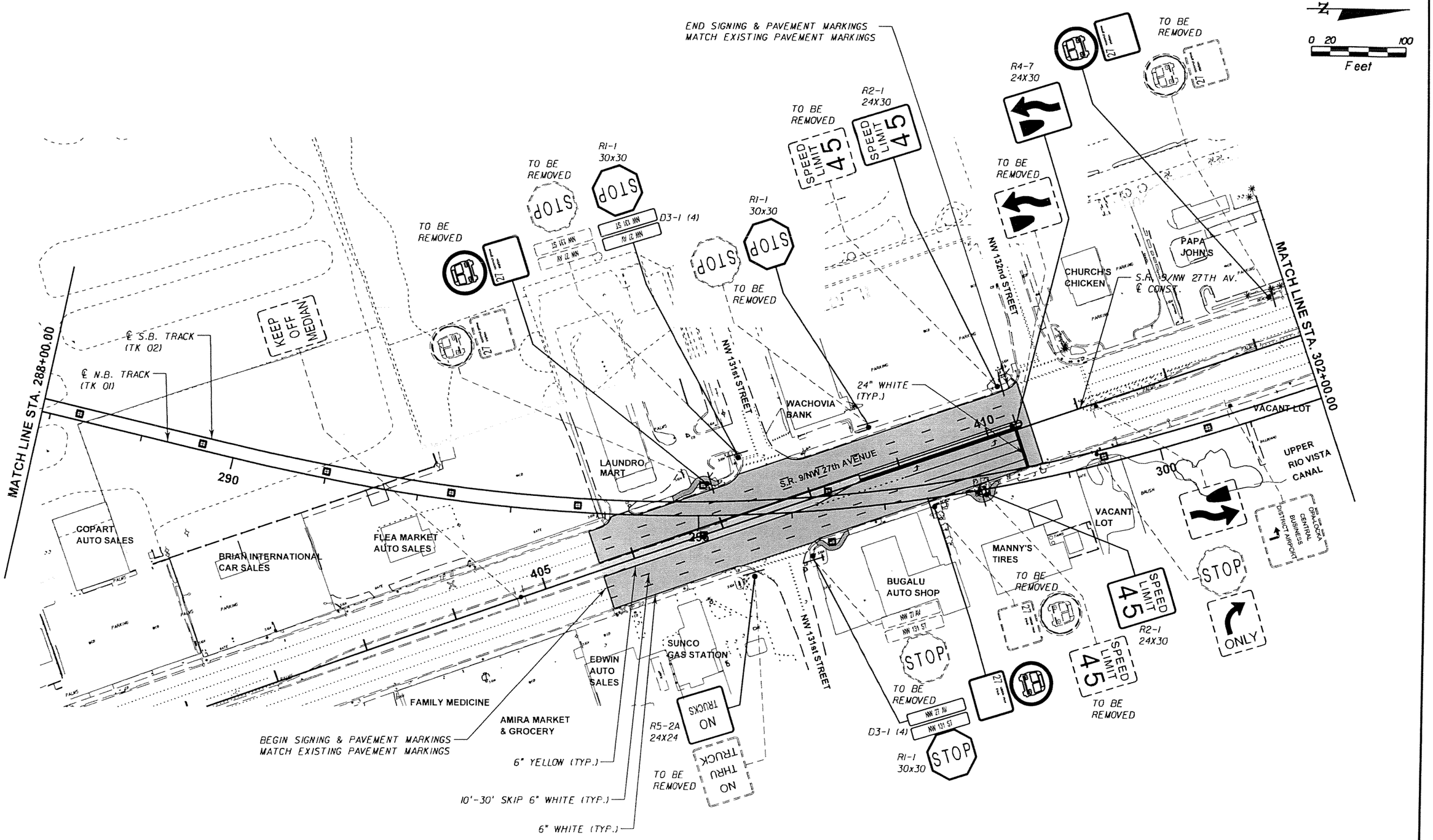

SUBJECT TO CHANGE

W.L.L. Designed by 05-06 Date						NORTH CORRIDOR METRORAIL EXTENSION - PRELIMINARY ENGINEERING (100% SUBMITTAL)
T.W. Drawn by 05-06 Date						MIAMI-DADE COUNTY / MIAMI-DADE TRANSIT
C.V. Checked by 05-02-06 Date						PARSONS 7600 CORPORATE CENTER DRIVE, SUITE 500 MIAMI, FLORIDA 33126 PHONE: (786) 464-1000 FAX: (786) 845-7119 CERTIFICATE OF AUTHORIZATION NO. 1838
M.A.B. 05-05-06 Approved by Date	No.	Date	By / Chk	App.	Revisions	Approved Date

BND
CIVIL ENGINEERING • ENVIRONMENTAL • AIRPORT • CONSTRUCTION MANAGEMENT • TRANSPORTATION
1200 NW 78 AVENUE, SUITE 400
MIAMI, FLORIDA 33126 - (305) 599-8495
Approved MICHAEL A. BUDALL, P.E. Date

SIGNING AND PAVEMENT MARKINGS

SIGNING AND PAVEMENT MARKING PLAN

Scale 1" = 100' | Drawing SPM-17 | Sheet 49

N

0 20 100
Feet

STOP
DR. STEWART GREER AVENUE
SPEED LIMIT 45
DO NOT ENTER
EAST 916
NW 135TH ST NEXT SIGNAL
ONE WAY
WEST 916
TRI-RAIL
ADVANCE AUTO PARTS
VACANT LOT (ECKERD'S)
NW 135th STREET
OPA LOCKA BOULEVARD
W. DRIVE BOULEVARD
VALERO GAS STATION
DRIVE IN TV
VACANT (KFC)
VALENTINES LIQUORS
VALUE
SUPERIOR FOOD MARKET & WESTERN UNION
MATCH LINE STA. 302+00.00
415
S.R. 9/NW 27TH AV. ℄ CONST.
420
425
S.R. 9/NW 27th AVENUE
6" WHITE (TYP.)
MATCH LINE STA. 316+00.00
305
UPPER RIO VISTA CANAL
U-GAS GAS STATION
310
CARIBBEAN CAFE
MOBIL GAS STATION
315
℄ S.B. TRACK (TK 02)
℄ N.B. TRACK (TK 01)
NW 135th STREET
OPA LOCKA BOULEVARD
NW 136th STREET
JCT 916
NW 135TH ST NEXT SIGNAL
WEST 916
EAST 916
DO NOT ENTER
ONE WAY
SPEED LIMIT 45
NW 27 AV
NW 136 ST
STOP
ONLY

SUBJECT TO CHANGE

W.L.L. Designed by	05-06 Date					
T.W. Drawn by	05-06 Date					
C.V. Checked by	05-02-06 Date					
M.A.B. Approved by	05-05-06 Date	No.	Date	By / Chk	App.	Revisions

NORTH CORRIDOR METRORAIL EXTENSION - PRELIMINARY ENGINEERING (100% SUBMITTAL)

MIAMI-DADE COUNTY
MIAMI-DADE TRANSIT

PARSONS
7600 CORPORATE CENTER DRIVE, SUITE 500
MIAMI, FLORIDA 33126
PHONE: (786) 464-1000 FAX: (786) 845-7119
CERTIFICATE OF AUTHORIZATION NO. 1838
Approved Date

BND
CIVIL ENGINEERING • ENVIRONMENTAL • AIRPORT • CONSTRUCTION MANAGEMENT • TRANSPORTATION
1200 NW 78 AVENUE, SUITE 400
MIAMI, FLORIDA 33126 - (305) 599-8495
Approved MICHAEL A. BUDALL, P.E. Date

SIGNING AND PAVEMENT MARKINGS

SIGNING AND PAVEMENT MARKING PLAN

Scale 1" = 100' | Drawing SPM-18 | Sheet 497

N

0 20 100
Feet

MATCH LINE STA. 316+00.00

MATCH LINE STA. 330+00.00

NW 137th STREET

YORK STREET

WILMINGTON STREET

VERMONT STREET

NW 139th STREET

SHOPPING PLAZA

PARADISE DINNER & BBQ (ABANDONED)

POP'S CAR WASH

MONEY TREE PAWN

OPEN DOOR SANCTUARY MINISTRY

AUTO REPAIR CENTER

GENERAL AUTO CREDIT

SHOPPING PLAZA

S.R. 9/NW 27TH AV. ℄ CONST.

S.R. 817/ 27TH AV. ℄ CONST.

430

10

435

440

S.R. 9/NW 27th AVENUE

S.R. 817/NW 27th AVENUE

S.R. 9/NW 27th AVENUE

CUSTOM WHEELS

GOODWEAR SERVICE CENTER

BUGER KING

320

GC MOTORS AUTO SALES

325

PROTERS LOCKSMITH

6" WHITE (TYP.)

6" WHITE (TYP.)

NW 27 AV

NW 139 ST

PRICE CHOICE SUPERMARKET

℄ S.B. TRACK (TK 02)

℄ N.B. TRACK (TK 01)

JCT 916

STOP

ONLY

ONE WAY

NO TURN ON RED

NORTH 817

NW 27 AVE

NORTH 9

SUBJECT TO CHANGE

W.L.L. Designed by	05-06 Date					
T.W. Drawn by	05-06 Date					
C.V. Checked by	05-02-06 Date					
M.A.B. Approved by	05-05-06 Date	No.	Date	By	App.	Revisions

NORTH CORRIDOR METRORAIL EXTENSION - PRELIMINARY ENGINEERING (100% SUBMITTAL)

MIAMI-DADE COUNTY

MIAMI-DADE TRANSIT

PARSONS
7600 CORPORATE CENTER DRIVE, SUITE 500
MIAMI, FLORIDA 33126
PHONE: (786) 464-1000 FAX: (786) 845-7119
CERTIFICATE OF AUTHORIZATION NO. 1838

BND
CIVIL ENGINEERING • ENVIRONMENTAL • AIRPORT • CONSTRUCTION MANAGEMENT • TRANSPORTATION
1200 NW 78 AVENUE, SUITE 400
MIAMI, FLORIDA 33126 - (305) 599-8495

Approved _____ Date _____

Approved MICHAEL A. RUDALL, P.E. Date _____

SIGNING AND PAVEMENT MARKINGS

SIGNING AND PAVEMENT MARKING PLAN

Scale _____ Drawing _____ Sheet _____

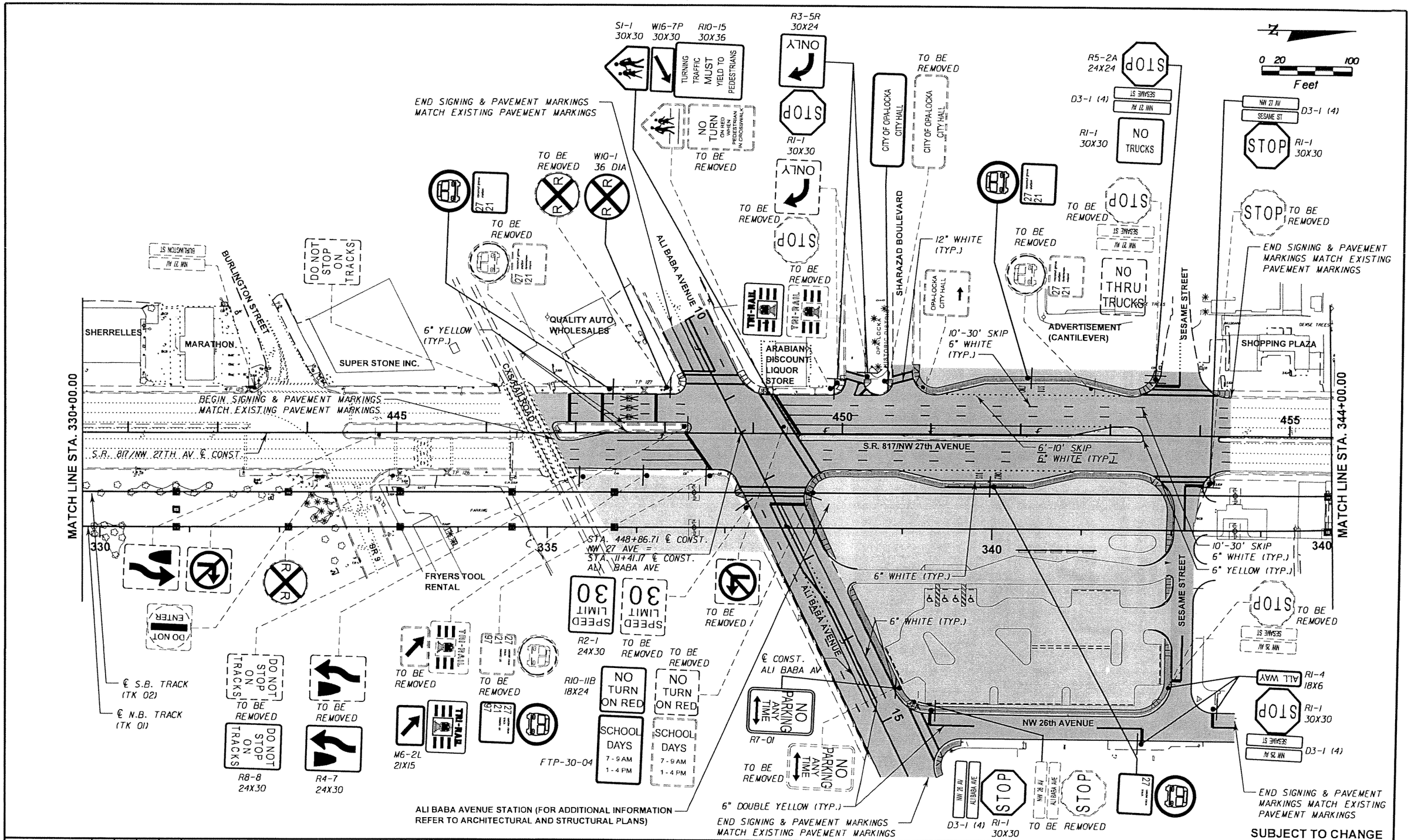

W.L.L. Designed by	05-06 Date					
T.W. Drawn by	05-06 Date					
C.V. Checked by	05-02-06 Date					
M.A.B. Approved by	05-05-06 Date	No.	Date	By / Chk	App.	Revisions

NORTH CORRIDOR METRORAIL EXTENSION - PRELIMINARY ENGINEERING (100% SUBMITTAL)

MIAMI-DADE COUNTY

MIAMI-DADE TRANSIT

PARSONS
7600 CORPORATE CENTER DRIVE, SUITE 500
MIAMI, FLORIDA 33126
PHONE: (786) 464-1000 FAX: (786) 845-7119
CERTIFICATE OF AUTHORIZATION NO. 1838

Approved ..... Date .....

BND
CIVIL ENGINEERING • ENVIRONMENTAL • AIRPORT • CONSTRUCTION MANAGEMENT • TRANSPORTATION
1200 NW 78 AVENUE, SUITE 400
MIAMI, FLORIDA 33126 - (305) 599-8495

Approved MICHAEL A. BUDALL, P.E. Date .....

SIGNING AND PAVEMENT MARKINGS

SIGNING AND PAVEMENT MARKING PLAN

Scale 1" = 100' Drawing SPM-20 Sheet 499

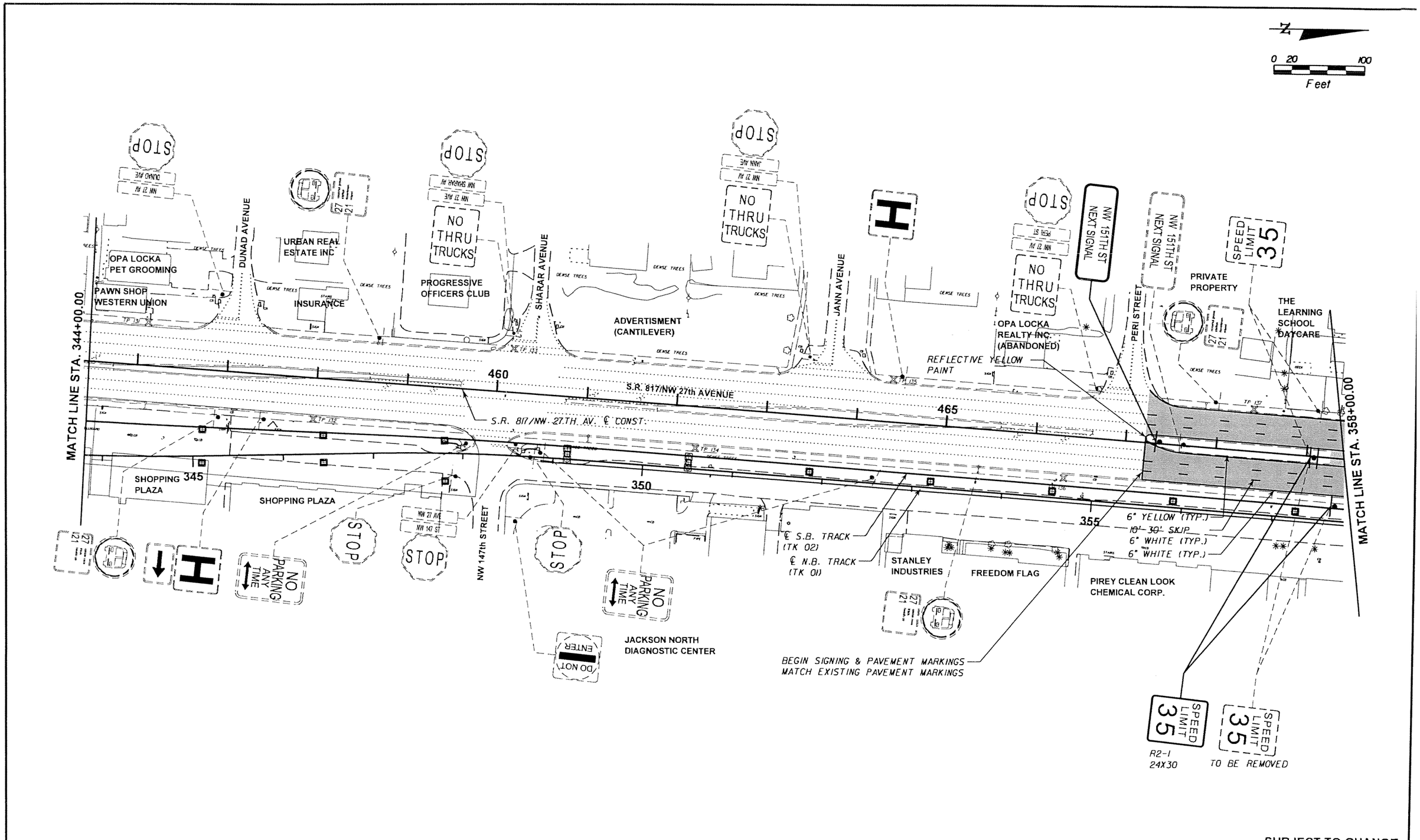

SUBJECT TO CHANGE

W.L.L. Designed by	05-06 Date					
T.W. Drawn by	05-06 Date					
C.V. Checked by	05-02-06 Date					
M.A.B. Approved by	05-05-06 Date	No.	Date	By / Chk	App.	Revisions

NORTH CORRIDOR METRORAIL EXTENSION - PRELIMINARY ENGINEERING (100% SUBMITTAL)

MIAMI-DADE COUNTY

MIAMI-DADE TRANSIT

PARSONS
7600 CORPORATE CENTER DRIVE, SUITE 500
MIAMI, FLORIDA 33126
PHONE: (786) 464-1000 FAX: (786) 845-7119
CERTIFICATE OF AUTHORIZATION NO. 1838

Approved | Date

BND
CIVIL ENGINEERING • ENVIRONMENTAL • AIRPORT • CONSTRUCTION MANAGEMENT • TRANSPORTATION
1200 NW 78 AVENUE, SUITE 400
MIAMI, FLORIDA 33126 - (305) 599-8495

Approved MICHAEL A. BUDALL, P.E. | Date

SIGNING AND PAVEMENT MARKINGS

SIGNING AND PAVEMENT MARKING PLAN

Scale 1" = 100' | Drawing SPM-21 | Sheet 500

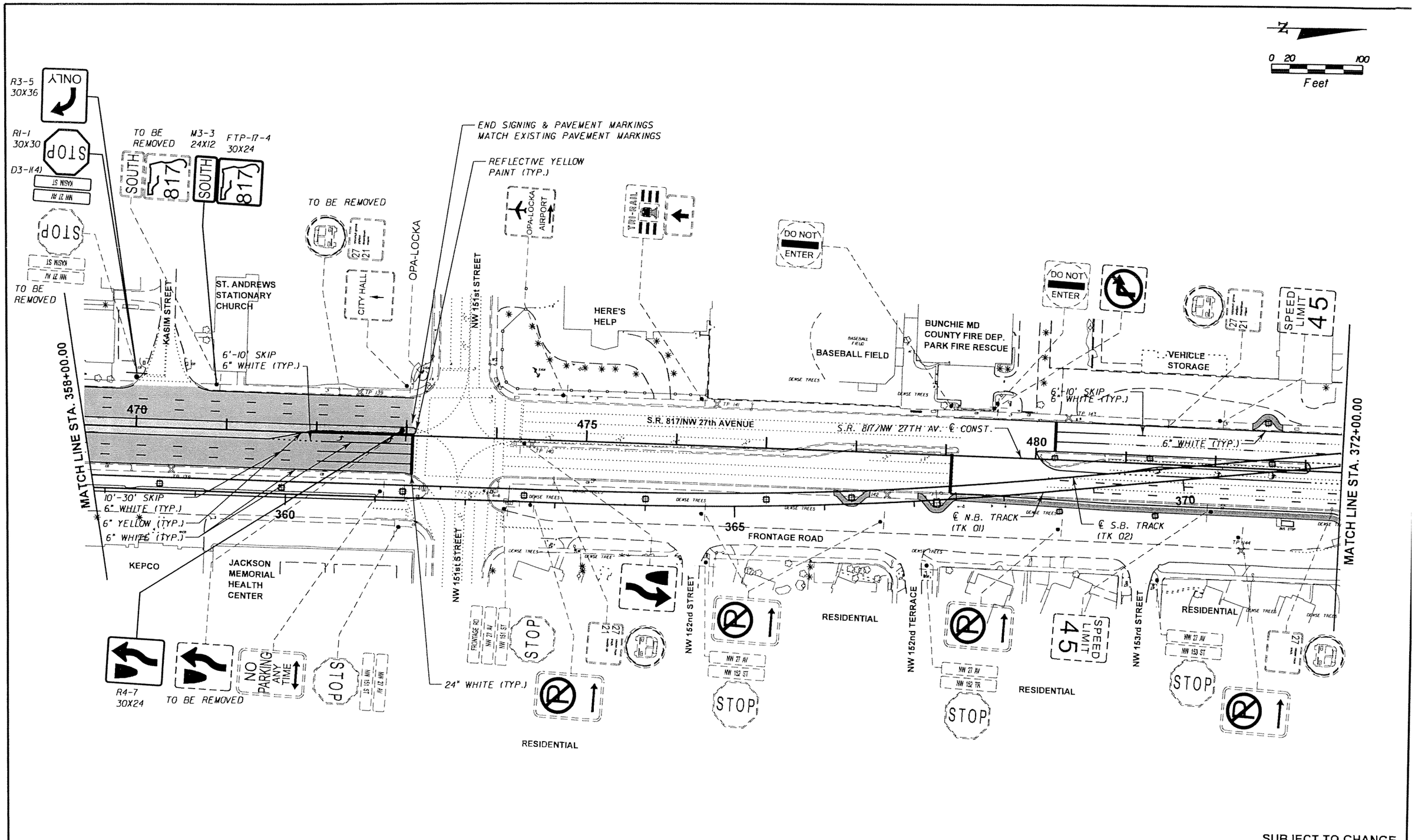

SUBJECT TO CHANGE

W.L.L.	05-06					
Designed by	Date					
T.W.	05-06					
Drawn by	Date					
C.V.	05-02-06					
Checked by	Date					
M.A.B.	05-05-06					
Approved by	Date	No.	Date	By / Chk	App.	Revisions

NORTH CORRIDOR METRORAIL EXTENSION - PRELIMINARY ENGINEERING (100% SUBMITTAL)

MIAMI-DADE COUNTY

MIAMI-DADE TRANSIT

PARSONS
7600 CORPORATE CENTER DRIVE, SUITE 500
MIAMI, FLORIDA 33126
PHONE: (786) 464-1000 FAX: (786) 845-7119
CERTIFICATE OF AUTHORIZATION NO. 1838

Approved | Date

BND
CIVIL ENGINEERING • ENVIRONMENTAL • AIRPORT • CONSTRUCTION MANAGEMENT • TRANSPORTATION
1200 NW 78 AVENUE, SUITE 400
MIAMI, FLORIDA 33126 - (305) 599-8495

Approved MICHAEL A. BUDALL, P.E. | Date

SIGNING AND PAVEMENT MARKINGS

SIGNING AND PAVEMENT MARKING PLAN

Scale 1" = 100' | Drawing SPM-22 | Sheet 501

0 20 100
Feet

MATCH LINE STA. 372+00.00

MATCH LINE STA. 386+00.00

THE TILE PLACE

C-8 CANAL

C-8 WATER MANAGEMENT DISTRICT

ADVERTISEMENT (CANTILEVER)

PUBLIC STORAGE

KFC

SPEED LIMIT 45

℄ N.B. TRACK (TK 01)

℄ S.B. TRACK (TK 02)

485 375 490 380 495 385

6" WHITE (TYP.)

S.R. 9/NW 27TH AV. ℄ CONST.

S.R. 817/NW 27th AVENUE

6" YELLOW (TYP.)

6'-10' SKIP
6" WHITE (TYP.)

NW 27th AVENUE

NW 164th STREET

NW 156th STREET

NW 27 AV
NW 154 ST

NW 27 AV
NW 156 ST

STOP

SUBJECT TO CHANGE

W.L.L. Designed by	05-06 Date					
T.W. Drawn by	05-06 Date					
C.V. Checked by	05-02-06 Date					
M.A.B. Approved by	05-05-06 Date	No.	Date	By / Chk	App.	Revisions

NORTH CORRIDOR METRORAIL EXTENSION - PRELIMINARY ENGINEERING (100% SUBMITTAL)

SIGNING AND PAVEMENT MARKINGS

MIAMI-DADE COUNTY

MIAMI-DADE TRANSIT

PARSONS
7600 CORPORATE CENTER DRIVE, SUITE 500
MIAMI, FLORIDA 33126
PHONE: (786) 464-1000 FAX: (786) 845-7119
CERTIFICATE OF AUTHORIZATION NO. 1838

BND
CIVIL ENGINEERING • ENVIRONMENTAL • AIRPORT • CONSTRUCTION MANAGEMENT • TRANSPORTATION
1200 NW 78 AVENUE, SUITE 400
MIAMI, FLORIDA 33126 · (305) 599-8495

Approved _____ Date _____

Approved MICHAEL A. BUDALL, P.E. Date _____

SIGNING AND PAVEMENT MARKING PLAN

Scale 1" = 100' | Drawing SPM-23 | Sheet 507

N

0 20 100
Feet

NW 163rd STREET STATION (FOR ADDITIONAL INFROMATION REFER TO ARCHITECTURAL AND STRUCTURAL PLANS)

MATCH LINE STA. 386+00.00

MATCH LINE STA. 400+00.00

NW 27th COURT

NW 159th STREET

NW 160th STREET

M&M FOOD MART

WALGREENS

℄ N.B. TRACK (TK 01)

℄ S.B. TRACK (TK 02)

6" WHITE (TYP.)

S.R. 817/NW 27TH AV. ℄ CONST.

S.R. 817/NW 27th AVENUE

FRONTAGE ROAD

BEGIN SIGNING & PAVEMENT MARKINGS MATCH EXISTING PAVEMENT MARKINGS

6'-10' SKIP 6" WHITE (TYP.)

6" YELLOW (TYP.)

6" WHITE (TYP.)

10'-30' SKIP 6" WHITE (TYP.)

TO BE REMOVED

R2-1 24X30

FTP-68-04 36X48

SUBJECT TO CHANGE

W.L.L. Designed by	05-06 Date						
T.W. Drawn by	05-06 Date						
C.V. Checked by	05-02-06 Date						
M.A.B. Approved by	05-05-06 Date	No.	Date	By / Chk	App.	Revisions	

NORTH CORRIDOR METRORAIL EXTENSION - PRELIMINARY ENGINEERING (100% SUBMITTAL)

MIAMI-DADE COUNTY

MIAMI-DADE TRANSIT

PARSONS
7600 CORPORATE CENTER DRIVE, SUITE 500
MIAMI, FLORIDA 33126
PHONE: (786) 464-1000 FAX: (786) 845-7119
CERTIFICATE OF AUTHORIZATION NO. 1636

Approved Date

BND
CIVIL ENGINEERING • ENVIRONMENTAL • AIRPORT • CONSTRUCTION MANAGEMENT • TRANSPORTATION
1200 NW 78 AVENUE, SUITE 400
MIAMI, FLORIDA 33126 • (305) 599-8495

Approved MICHAEL A. BUDALL, P.E. Date

SIGNING AND PAVEMENT MARKINGS

SIGNING AND PAVEMENT MARKING PLAN

Scale 1" = 100' | Drawing SPM-24 | Sheet 523

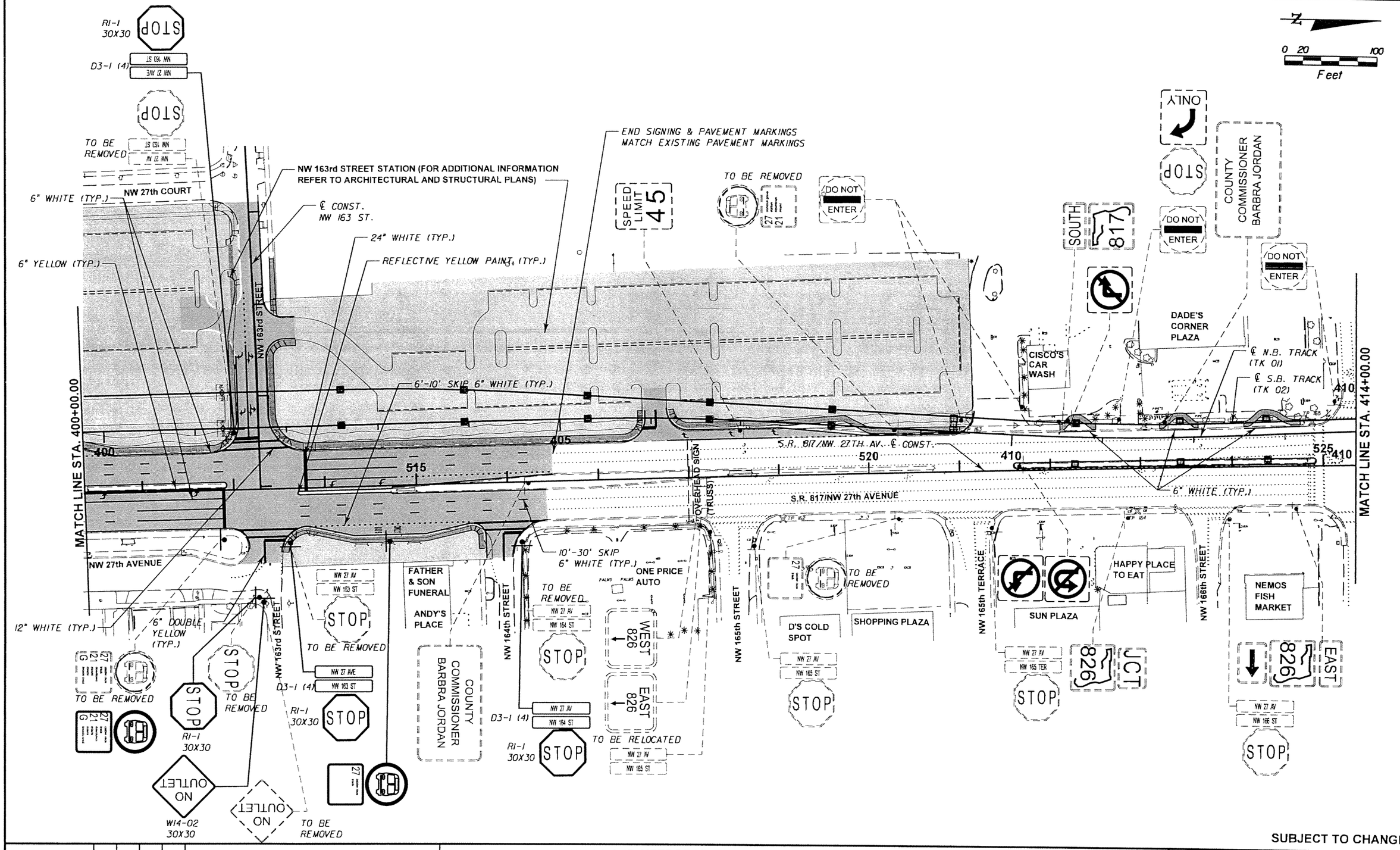

SUBJECT TO CHANGE

W.L.L. Designed by	05-06 Date					
T.W. Drawn by	05-06 Date					
C.V. Checked by	05-02-06 Date					
M.A.B. Approved by	05-05-06 Date	No.	Date	By / Chk	App.	Revisions

NORTH CORRIDOR METRORAIL EXTENSION - PRELIMINARY ENGINEERING (100% SUBMITTAL)

MIAMI-DADE COUNTY

MIAMI-DADE TRANSIT

PARSONS
7600 CORPORATE CENTER DRIVE, SUITE 500
MIAMI, FLORIDA 33126
PHONE: (786) 464-1000 FAX: (786) 845-7119
CERTIFICATE OF AUTHORIZATION NO. 1838
Approved Date

BND
CIVIL ENGINEERING • ENVIRONMENTAL • AIRPORT • CONSTRUCTION MANAGEMENT • TRANSPORTATION
1200 NW 78 AVENUE, SUITE 400
MIAMI, FLORIDA 33126 - (305) 599-8495
Approved MICHAEL A. BUDALI, P.E. Date

SIGNING AND PAVEMENT MARKINGS

SIGNING AND PAVEMENT MARKING PLAN

Scale Drawing Sheet

0 20 100
Feet

MATCH LINE STA. 414+00.00

MATCH LINE STA. 428+00.00

FRONTAGE ROAD

FRONTAGE ROAD

NW 167th STREET

NW 167th TERRACE

NW 168th TERRACE

NW 169th TERRACE

NW 170th STREET

NW 170th TERRACE

PALMETTO EXPRESSWAY

OPA-LOCKA AIRPORT

TATOO SHOP

FPL POWER STATION

CITGO

RUSSELL MOTORS

GEORGIA MEAT'S

SHELL GAS STATION

GREATER PEACE MB CHURCH

VACANT LOT

ADVERTISEMENT (CANTILEVER)

VACANT LOT

RACE TRACK

OPA-LOCKA NEIGHBORHOOD SERVICE CENTER

STADIUM RACETRACK

OVERHEAD SIGN (TRUSS)

TO BE REMOVED

6" WHITE (TYP.)

6" WHITE (TYP.)

6" WHITE (TYP.)

6" WHITE (TYP.)

S.R. 817/NW 27TH AV. ℄ CONST.

S.R. 817/NW 27th AVENUE

℄ N.B. TRACK (TK 01)

℄ S.B. TRACK (TK 02)

415

530

420

535

425

SUBJECT TO CHANGE

W.L.L.	05-06					
Designed by	Date					
T.W.	05-06					
Drawn by	Date					
C.V.	05-02-06					
Checked by	Date					
M.A.B.	05-05-06					
Approved by	Date	No.	Date	By / Chk	App.	Revisions

NORTH CORRIDOR METRORAIL EXTENSION - PRELIMINARY ENGINEERING (100% SUBMITTAL)

SIGNING AND PAVEMENT MARKINGS

MIAMI-DADE COUNTY

MIAMI-DADE TRANSIT

PARSONS
7600 CORPORATE CENTER DRIVE, SUITE 500
MIAMI, FLORIDA 33126
PHONE: (786) 464-1000 FAX: (786) 845-7119
CERTIFICATE OF AUTHORIZATION NO. 1838

Approved

Date

BND
CIVIL ENGINEERING • ENVIRONMENTAL • AIRPORT • CONSTRUCTION MANAGEMENT • TRANSPORTATION
1200 NW 78 AVENUE, SUITE 400
MIAMI, FLORIDA 33126 - (305) 599-8495

Approved MICHAEL A. BUDALL, P.E.

Date

SIGNING AND PAVEMENT MARKING PLAN

Scale 1" = 100'

Drawing SPM-26

Sheet 505

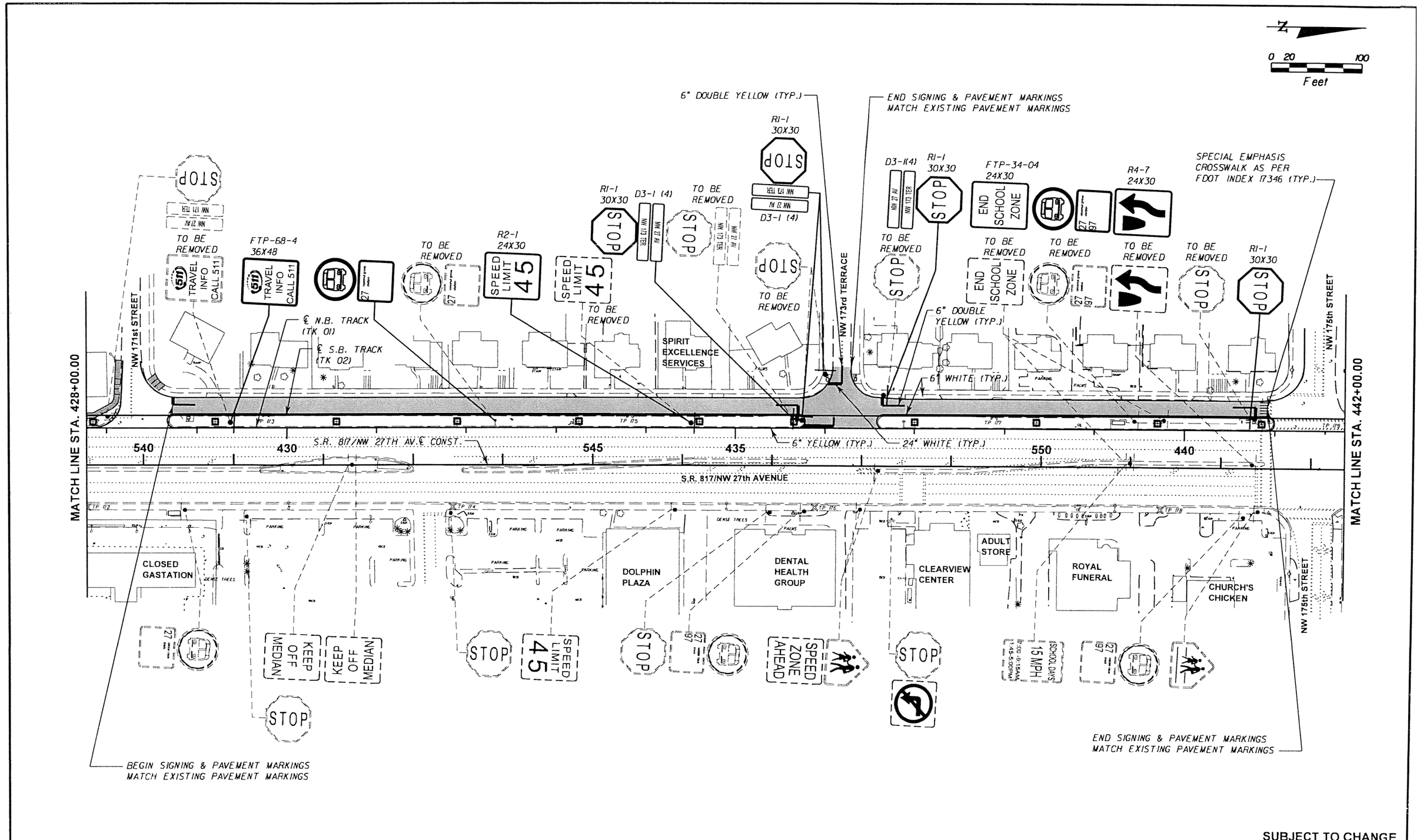

SUBJECT TO CHANGE

W.L.L. Designed by	05-06 Date					
T.W. Drawn by	05-06 Date					
C.V. Checked by	05-02-06 Date					
M.A.B. Approved by	05-05-06 Date	No.	Date	By / Chk	App.	Revisions

NORTH CORRIDOR METRORAIL EXTENSION - PRELIMINARY ENGINEERING (100% SUBMITTAL)

MIAMI-DADE COUNTY

MIAMI-DADE TRANSIT

PARSONS
7600 CORPORATE CENTER DRIVE, SUITE 500
MIAMI, FLORIDA 33126
PHONE: (786) 464-1000 FAX: (786) 845-7119
CERTIFICATE OF AUTHORIZATION NO. 1838

Approved | Date

BND
CIVIL ENGINEERING • ENVIRONMENTAL • AIRPORT • CONSTRUCTION MANAGEMENT • TRANSPORTATION
1200 NW 78 AVENUE, SUITE 400
MIAMI, FLORIDA 33126 - (305) 599-8495

Approved MICHAEL A. BUDALL, P.E. | Date

SIGNING AND PAVEMENT MARKINGS

SIGNING AND PAVEMENT MARKING PLAN

Scale 1" = 100' | Drawing SPM 27 | Sheet

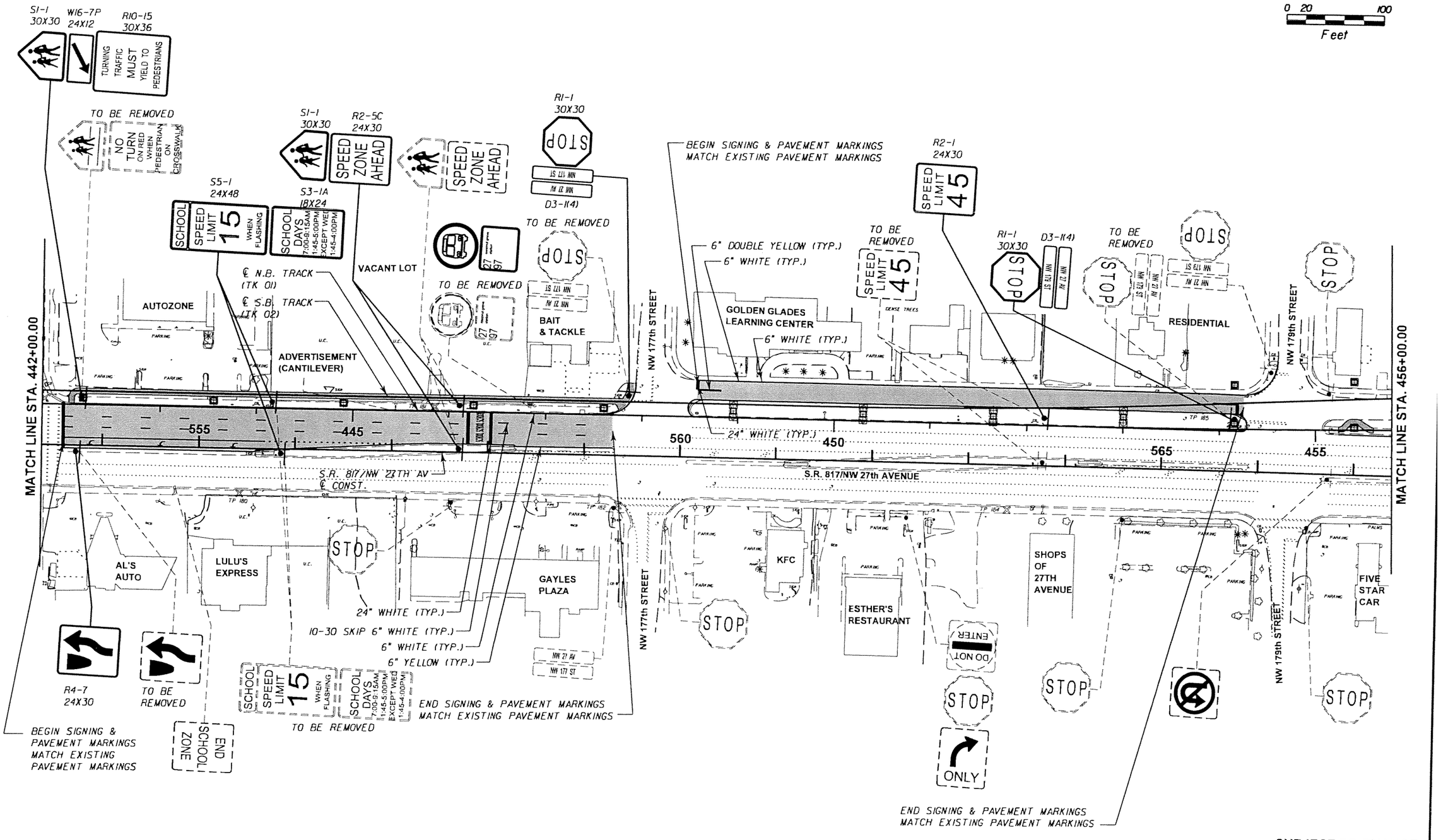

SUBJECT TO CHANGE

W.L.L. Designed by	05-06 Date					
T.W. Drawn by	05-06 Date					
C.V. Checked by	05-02-06 Date					
M.A.B. Approved by	05-05-06 Date	No.	Date	By / Chk	App.	Revisions

NORTH CORRIDOR METRORAIL EXTENSION - PRELIMINARY ENGINEERING (100% SUBMITTAL)

SIGNING AND PAVEMENT MARKINGS

MIAMI-DADE COUNTY

MIAMI-DADE TRANSIT

PARSONS
7600 CORPORATE CENTER DRIVE, SUITE 500
MIAMI, FLORIDA 33126
PHONE: (786) 464-1000 FAX: (786) 845-7119
CERTIFICATE OF AUTHORIZATION NO. 1838

Approved ____ Date ____

BND
CIVIL ENGINEERING • ENVIRONMENTAL • AIRPORT • CONSTRUCTION MANAGEMENT • TRANSPORTATION
1200 NW 78 AVENUE, SUITE 400
MIAMI, FLORIDA 33126 - (305) 599-8495

Approved MICHAEL A. BUDALL, P.E. Date ____

SIGNING AND PAVEMENT MARKING PLAN

Scale 1" = 100' | Drawing SPM-28 | Sheet 57

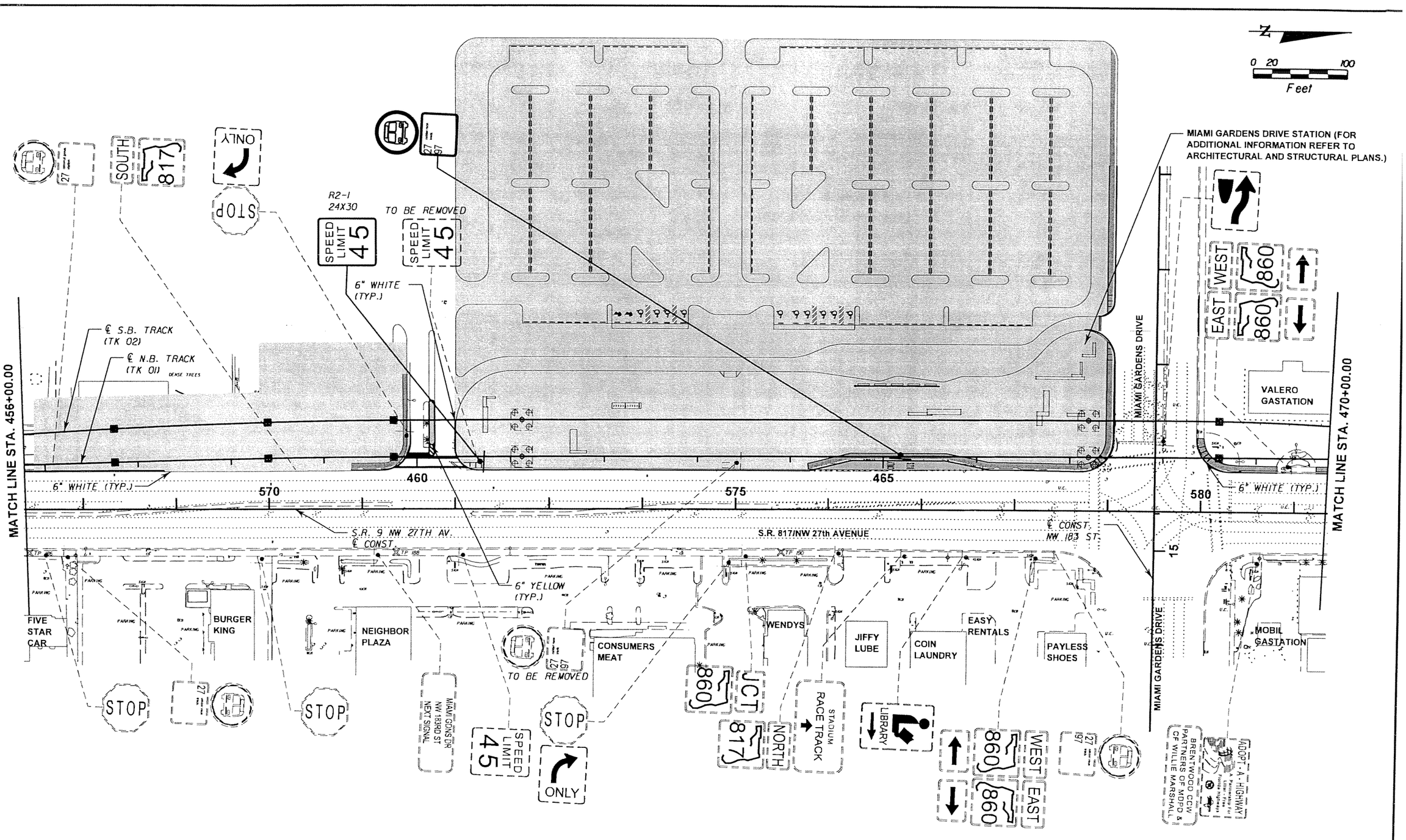

SUBJECT TO CHANGE

W.L.L. Designed by	05-06 Date				
T.W. Drawn by	05-06 Date				
C.V. Checked by	05-02-06 Date				
M.A.B. Approved by	05-05-06 Date	No.	Date	By / Chk	App. Revisions

NORTH CORRIDOR METRORAIL EXTENSION - PRELIMINARY ENGINEERING (100% SUBMITTAL)

SIGNING AND PAVEMENT MARKINGS

MIAMI-DADE COUNTY

MIAMI-DADE TRANSIT

PARSONS
7600 CORPORATE CENTER DRIVE, SUITE 500
MIAMI, FLORIDA 33126
PHONE: (786) 464-1000 FAX: (786) 845-7119
CERTIFICATE OF AUTHORIZATION NO. 1838

BND
CIVIL ENGINEERING · ENVIRONMENTAL · AIRPORT · CONSTRUCTION MANAGEMENT · TRANSPORTATION
1200 NW 78 AVENUE, SUITE 400
MIAMI, FLORIDA 33126 · (305) 599-8495

Approved _____ Date _____

Approved MICHAEL A. BUDALI, P.E. Date _____

SIGNING AND PAVEMENT MARKING PLAN

Scale 1" = 100' | Drawing | Sheet

0 20 100
Feet

R2-1 30X30 STOP
R5-1 30X30 DO NOT ENTER
RIGHT TURN ONLY
TO BE REMOVED STOP
TO BE REMOVED STOP
DO NOT ENTER
TO BE REMOVED JCT 860
M2-1 21X15 JCT
FTP-17-4 30X24 860
MIAMI GDNS DR NW 183RD ST NEXT SIGNAL
MIAMI GDNS DR NW 183RD ST NEXT SIGNAL

END SIGNING & PAVEMENT MARKINGS
MATCH EXISTING PAVEMENT MARKINGS

HIDDEN ENTRANCE

ARCHDIOCESE OF MIAMI (CENTER)
BELLSOUTH
U-HAUL
S.R. 817/NW 27TH AV. CONST.
S.R. 817/NW 27th AVENUE
595
590
585
480
475
470
MATCH LINE STA. 470+00.00
MATCH LINE STA. 484+00.00
6" WHITE (TYP.)
6" YELLOW (TYP.)
℄ S.B. TRACK (TK 02)
℄ N.B. TRACK (TK 01)
10-30 SKIP 6" WHITE (TYP.)
8" YELLOW (TYP.)
18" YELLOW (TYP.)
6" WHITE (TYP.)
CITGO GAS STATION
MIDAS
SUBWAY DUNKIN DONUTS
ANNETTE WILLIAMS INSURANCE
CAROL CITY FIRE STATION
NW 187th STREET
NW 27 AVE
NW 187 ST
STOP
817 NORTH M3-1 24X12
FTP-17-4 30X24
817 NORTH TO BE REMOVED
FLORIDA'S TURNPIKE TO
FTP-16-4 30X36
M4-5 24X12
STOP
FLORIDA'S TURNPIKE TO BE REMOVED
BEGIN SIGNING & PAVEMENT MARKINGS MATCH EXISTING PAVEMENT MARKINGS
MIAMI GARDENS PLAZA
WACHOVIA
OUTLET ON

SUBJECT TO CHANGE

W.L.L. Designed by	05-06 Date					
T.W. Drawn by	05-06 Date					
C.V. Checked by	05-02-06 Date					
M.A.B. Approved by	05-05-06 Date	No.	Date	By / Chk	App.	Revisions

NORTH CORRIDOR METRORAIL EXTENSION - PRELIMINARY ENGINEERING (100% SUBMITTAL)

SIGNING AND PAVEMENT MARKINGS

MIAMI-DADE COUNTY
MIAMI-DADE TRANSIT

PARSONS
7600 CORPORATE CENTER DRIVE, SUITE 500
MIAMI, FLORIDA 33126
PHONE: (786) 464-1000 FAX: (786) 845-7119
CERTIFICATE OF AUTHORIZATION NO. 1838
Approved ----- Date -----

BND
CIVIL ENGINEERING • ENVIRONMENTAL • AIRPORT • CONSTRUCTION MANAGEMENT • TRANSPORTATION
1200 NW 78 AVENUE, SUITE 400
MIAMI, FLORIDA 33126 - (305) 599-8495
Approved MICHAEL A. BUDALL, P.E. Date -----

SIGNING AND PAVEMENT MARKING PLAN

Scale 1" = 100' | Drawing SPM-30 | Sheet 509

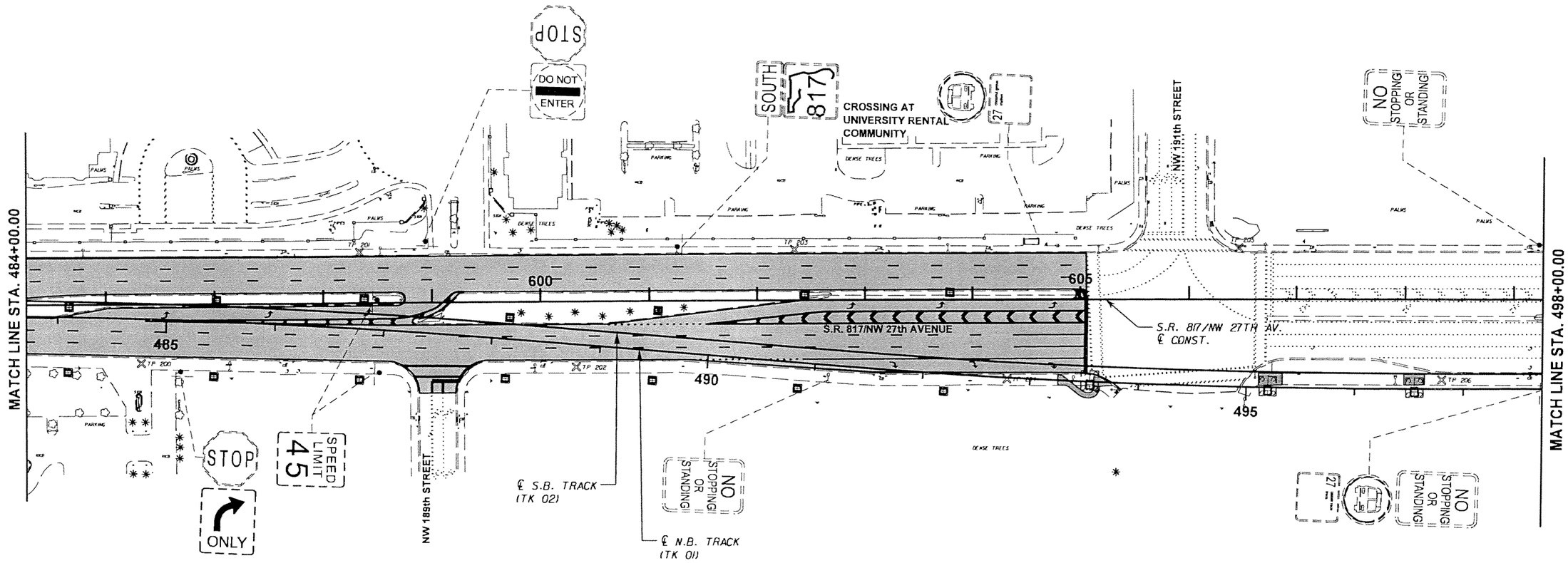

SUBJECT TO CHANGE

W.L.L. Designed by	05-06 Date					NORTH CORRIDOR METRORAIL EXTENSION - PRELIMINARY ENGINEERING (100% SUBMITTAL)	SIGNING AND PAVEMENT MARKINGS
T.W. Drawn by	05-06 Date						
C.V. Checked by	05-02-06 Date						
M.A.B. Approved by	05-05-06 Date	No.	Date	By / Chk	App.	Revisions	

MIAMI-DADE COUNTY — MIAMI-DADE TRANSIT

PARSONS
7600 CORPORATE CENTER DRIVE, SUITE 500
MIAMI, FLORIDA 33126
PHONE: (786) 464-1000 FAX: (786) 845-7119
CERTIFICATE OF AUTHORIZATION NO. 1836
Approved ----- Date -----

BND
CIVIL ENGINEERING · ENVIRONMENTAL · AIRPORT · CONSTRUCTION MANAGEMENT · TRANSPORTATION
1200 NW 78 AVENUE, SUITE 400
MIAMI, FLORIDA 33126 - (305) 599-8495
Approved MICHAEL A. BUDALL, P.E. Date -----

SIGNING AND PAVEMENT MARKING PLAN

Scale 1" = 100' | Drawing SPM-31 | Sheet 510

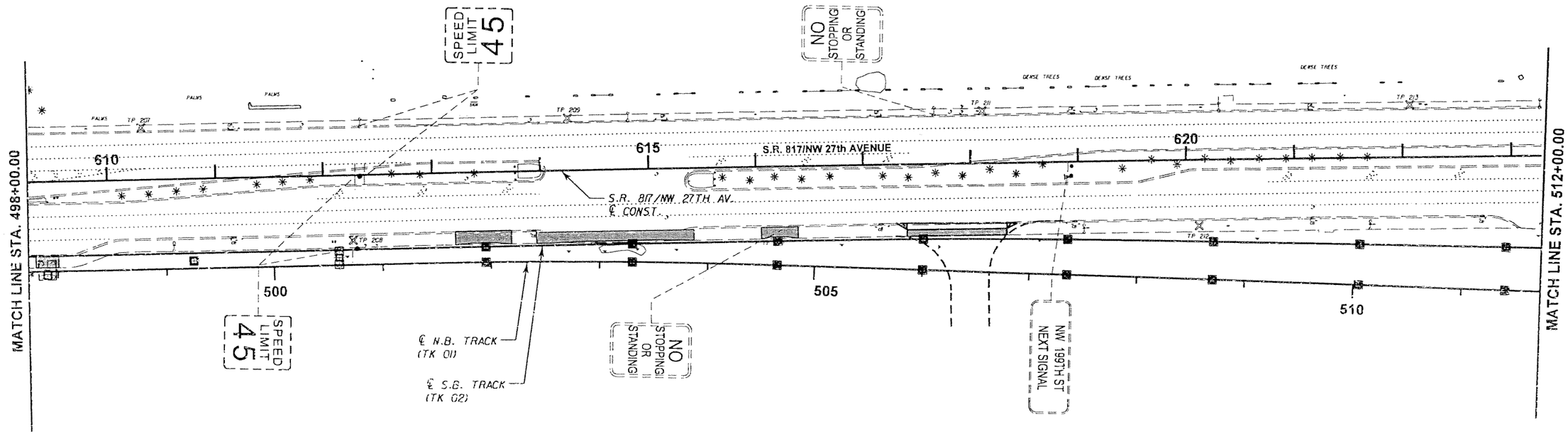

SUBJECT TO CHANGE

W.L.L. Designed by	05-06 Date						
T.W. Drawn by	05-06 Date						
C.V. Checked by	05-02-06 Date						
M.A.B. Approved by	05-05-06 Date	No.	Date	By / Chk	App.	Revisions	

NORTH CORRIDOR METRORAIL EXTENSION - PRELIMINARY ENGINEERING (100% SUBMITTAL)

SIGNING AND PAVEMENT MARKINGS

MIAMI-DADE COUNTY

MIAMI-DADE TRANSIT

PARSONS
7600 CORPORATE CENTER DRIVE, SUITE 500
MIAMI, FLORIDA 33126
PHONE: (786) 454-1000 FAX: (786) 845-7119
CERTIFICATE OF AUTHORIZATION NO. 1838

Approved _____ Date _____

BND
CIVIL ENGINEERING • ENVIRONMENTAL • AIRPORT • CONSTRUCTION MANAGEMENT • TRANSPORTATION
1200 NW 78 AVENUE, SUITE 400
MIAMI, FLORIDA 33126 • (305) 599-8495

Approved MICHAEL A. BUDALL, P.E. Date _____

SIGNING AND PAVEMENT MARKING PLAN

Scale 1" = 100' | Drawing SPM-32 | Sheet 5 of 11

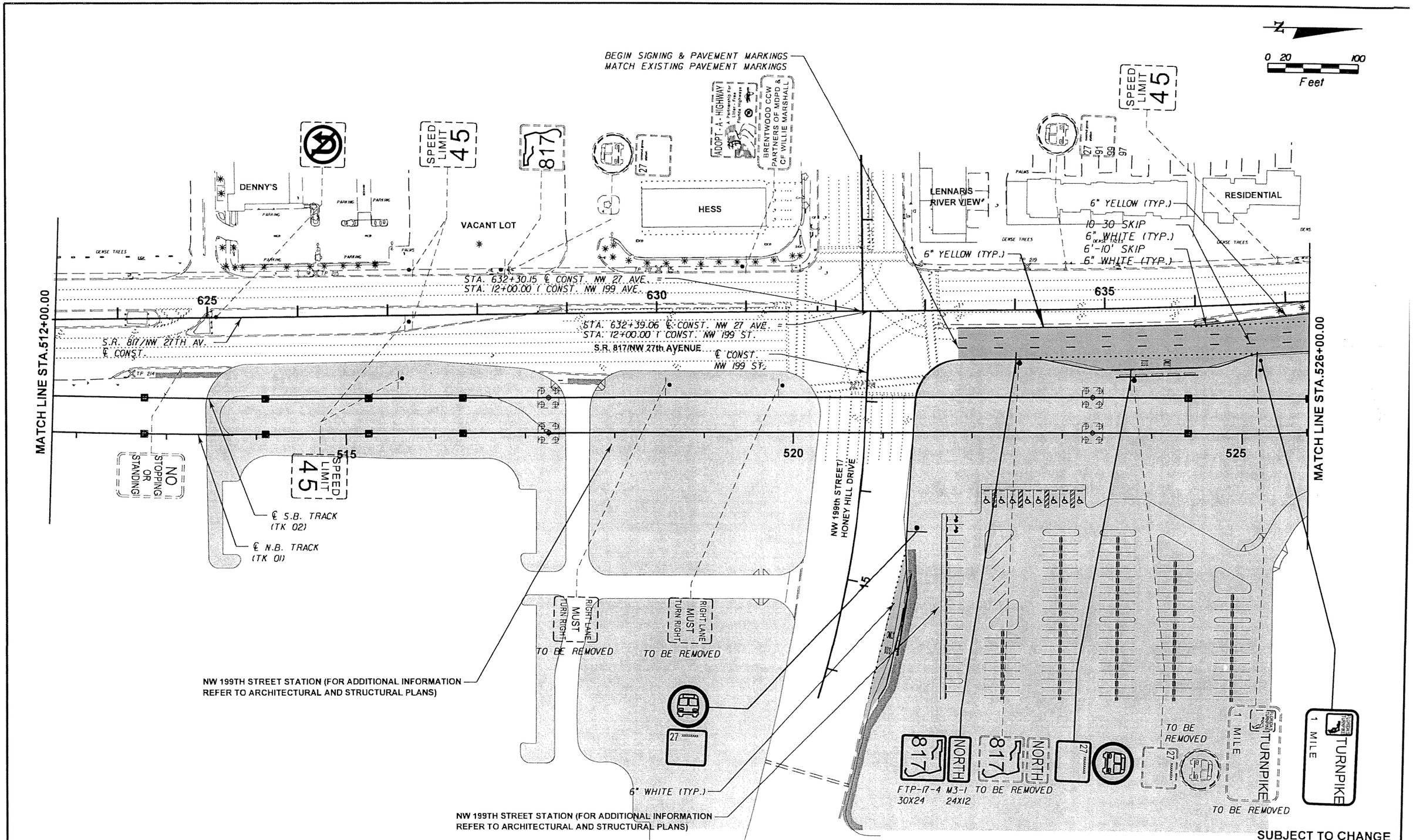

SUBJECT TO CHANGE

W.L.L. Designed by	05-06 Date					
T.W. Drawn by	05-06 Date					
C.V. Checked by	05-02-06 Date					
M.A.B. Approved by	05-05-06 Date	No.	Date	By / Chk	App.	Revisions

NORTH CORRIDOR METRORAIL EXTENSION - PRELIMINARY ENGINEERING (100% SUBMITTAL)

MIAMI-DADE COUNTY

MIAMI-DADE TRANSIT

PARSONS
7600 CORPORATE CENTER DRIVE, SUITE 500
MIAMI, FLORIDA 33126
PHONE: (786) 464-1000 FAX: (786) 845-7119
CERTIFICATE OF AUTHORIZATION NO. 1838

Approved | Date

BND
CIVIL ENGINEERING • ENVIRONMENTAL • AIRPORT • CONSTRUCTION MANAGEMENT • TRANSPORTATION
1200 NW 78 AVENUE, SUITE 400
MIAMI, FLORIDA 33126 - (305) 599-8495

Approved MICHAEL A. BUDALL, P.E. | Date

SIGNING AND PAVEMENT MARKINGS

SIGNING AND PAVEMENT MARKING PLAN

Scale 1" = 100' | Drawing SPM-33 | Sheet

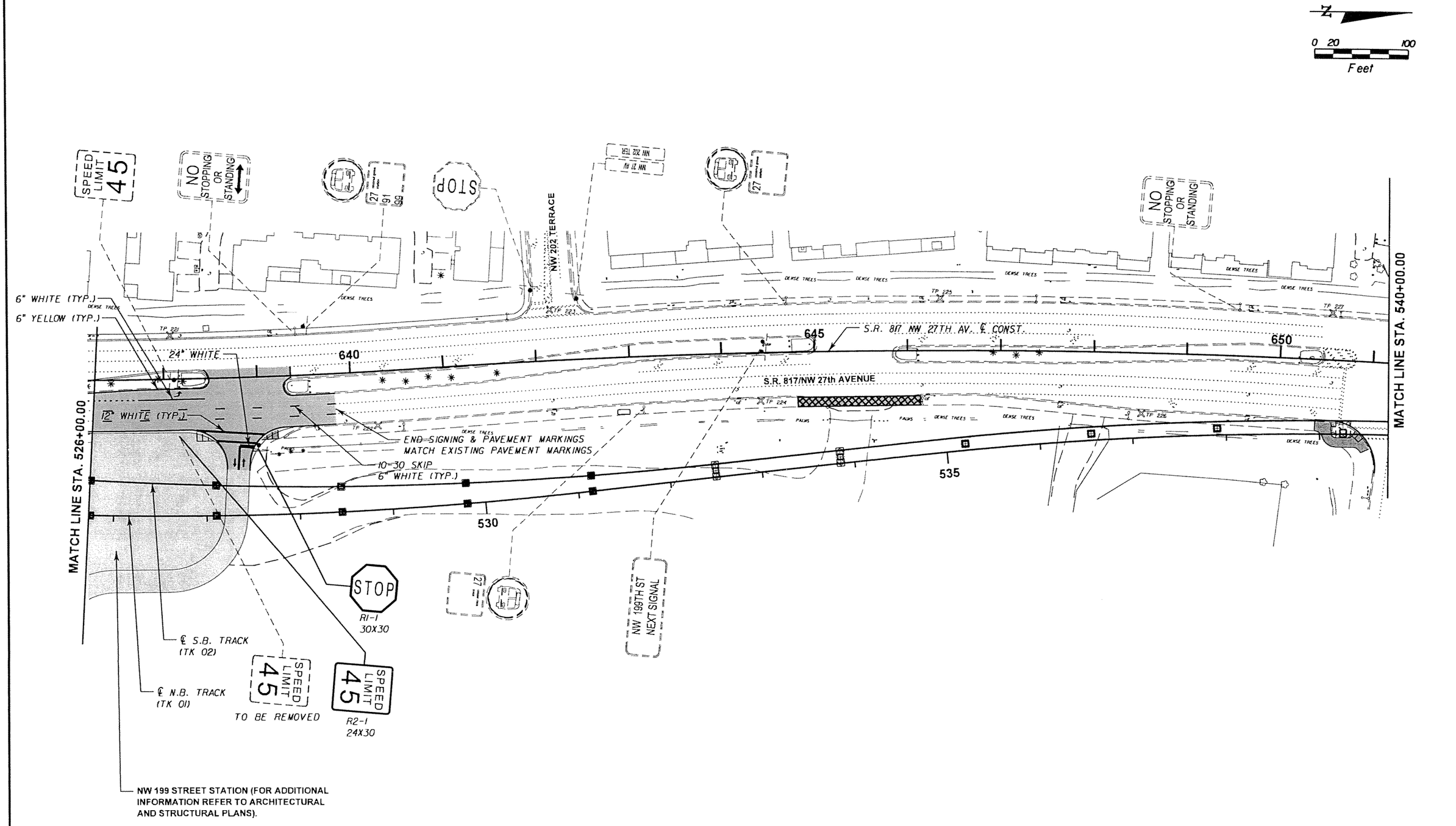

SUBJECT TO CHANGE

W.L.L. Designed by	05-06 Date					
T.W. Drawn by	05-06 Date					
C.V. Checked by	05-02-06 Date					
M.A.B. Approved by	05-05-06 Date	No.	Date	By / Chk	App.	Revisions

NORTH CORRIDOR METRORAIL EXTENSION - PRELIMINARY ENGINEERING (100% SUBMITTAL)

SIGNING AND PAVEMENT MARKINGS

MIAMI-DADE COUNTY

MIAMI-DADE TRANSIT

PARSONS
7600 CORPORATE CENTER DRIVE, SUITE 500
MIAMI, FLORIDA 33126
PHONE: (786) 464-1000 FAX: (786) 845-7119
CERTIFICATE OF AUTHORIZATION NO. 1838

Approved Date

BND
CIVIL ENGINEERING • ENVIRONMENTAL • AIRPORT • CONSTRUCTION MANAGEMENT • TRANSPORTATION
1200 NW 78 AVENUE, SUITE 400
MIAMI, FLORIDA 33126 - (305) 599-8495

Approved MICHAEL A. BUDALL, P.E. Date

SIGNING AND PAVEMENT MARKING PLAN

Scale 1" = 100' | Drawing SPM-34 | Sheet 513

N

0 20 100
Feet

R2-1
24X30

SPEED LIMIT 45

TO BE REMOVED

SPEED LIMIT 45

STADIUM

TO BE REMOVED

STADIUM

TO BE REMOVED

ONLY

STOP

R4-7
24X30

27
91
99

NO STANDING OR STOPPING

817 817

NORTH SOUTH

VACANT LOT

6'-10' SKIP
6" WHITE (TYP.)

RACETRACK
GAS STATION

655

660

665

S.R. 817/NW 27TH AV. ℄ CONST.

S.R. 817/NW 27th AVENUE

540

545

550

℄ S.B. TRACK
(TK 02)

℄ N.B. TRACK
(TK 01)

SNAKE CREEK CANAL

8" WHITE
(TYP.)

18" WHITE (TYP.)

CANAL

24" WHITE (TYP.)

MATCH LINE STA. 540+00.00

MATCH LINE STA.554+00.00

NW 207th STREET

BEGIN SIGNING & PAVEMENT MARKINGS
MATCH EXISTING PAVEMENT MARKINGS

6" YELLOW (TYP.)

10-30 SKIP 6" WHITE (TYP.)

6" WHITE (TYP.)

C-6
WATER MANAGEMENT DISTRICT

C-6
WATER MANAGEMENT DISTRICT

SPEED LIMIT 45

R2-1
24X30

SPEED LIMIT 45

TO BE REMOVED

TO BE REMOVED

S1-1
30X30

NO STANDING OR STOPPING

R7-4C
18X24

NO STANDING OR STOPPING

TO BE REMOVED

W16-7P
24X12

S1-1
30X30

TO BE REMOVED

OUTLET
ON

END SIGNING & PAVEMENT MARKINGS
MATCH EXISTING PAVEMENT MARKINGS

SUBJECT TO CHANGE

W.L.L. Designed by	05-06 Date					
T.W. Drawn by	05-06 Date					
C.V. Checked by	05-02-06 Date					
M.A.B. Approved by	05-05-06 Date	No.	Date	By / Chk	App.	Revisions

NORTH CORRIDOR METRORAIL EXTENSION - PRELIMINARY ENGINEERING (100% SUBMITTAL)

SIGNING AND PAVEMENT MARKINGS

MIAMI-DADE COUNTY

MIAMI-DADE TRANSIT

PARSONS
7600 CORPORATE CENTER DRIVE, SUITE 500
MIAMI, FLORIDA 33126
PHONE: (786) 464-1000 FAX: (786) 845-7119
CERTIFICATE OF AUTHORIZATION NO. 1838

Approved | Date

BND
CIVIL ENGINEERING · ENVIRONMENTAL · AIRPORT · CONSTRUCTION MANAGEMENT · TRANSPORTATION
1200 NW 78 AVENUE, SUITE 400
MIAMI, FLORIDA 33126 - (305) 599-8495

Approved MICHAEL A. BUDALL, P.E. | Date

SIGNING AND PAVEMENT MARKING PLAN

Scale 1" = 100' | Drawing SPM-35 | Sheet 514

N

0 20 100
Feet

END SIGNING & PAVEMENT MARKINGS
MATCH EXISTING PAVEMENT MARKINGS

SPEED LIMIT 45

10-30 SKIP
6" WHITE (TYP.)

6" YELLOW (TYP.)

24" WHITE

6" WHITE (TYP.)

CITGO

S.R. 817/NW 27TH AV.
℄ CONST.

S.R. 817/NW 27th AVENUE

670

675

CANAL

SPEED LIMIT 45

TO BE REMOVED

CALDER

MATCH LINE STA.554+00.00

MATCH LINE STA.568+00.00

6" WHITE (TYP.)

6" DOUBLE YELLOW (TYP.)

CANAL

555

560

565

NW 27 AVE

R1-1 30X30 STOP

STADIUM

TO BE REMOVED

STADIUM

TO BE REMOVED

CRYSTAL LAKE APARTMENTS

CALDER RACE COURSE

℄ S.B. TRACK (TK 02)

℄ N.B. TRACK (TK 01)

END SIGNIN & PAVEMENT MARKINGS
MATCH EXISTING PAVEMENT MARKING

SPECIAL EMPHASIS CROSSWALK
AS PER FOOT INDEX 17346 (TYP.)

BEGIN SIGNING & PAVEMENT MARKINGS
MATCH EXISTING PAVEMENT MARKINGS

SUBJECT TO CHANGE

W.L.L. Designed by	05-06 Date					
T.W. Drawn by	05-06 Date					
C.V. Checked by	05-02-06 Date					
M.A.B. Approved by	05-05-06 Date	No.	Date	By / Chk	App.	Revisions

NORTH CORRIDOR METRORAIL EXTENSION - PRELIMINARY ENGINEERING (100% SUBMITTAL)

SIGNING AND PAVEMENT MARKINGS

MIAMI-DADE COUNTY

MIAMI-DADE TRANSIT

PARSONS
7600 CORPORATE CENTER DRIVE, SUITE 500
MIAMI, FLORIDA 33126
PHONE: (786) 464-1000 FAX: (786) 845-7119
CERTIFICATE OF AUTHORIZATION NO. 1838

Approved | Date

BND
CIVIL ENGINEERING • ENVIRONMENTAL • AIRPORT • CONSTRUCTION MANAGEMENT • TRANSPORTATION
1200 NW 78 AVENUE, SUITE 400
MIAMI, FLORIDA 33126 - (305) 599-8495

Approved MICHAEL A. BUDALL, P.E. | Date

SIGNING AND PAVEMENT MARKING PLAN

Scale 1" = 100' | Drawing SPM-36 | Sheet 515

N

0 20 100
Feet

MATCH LINE STA. 568+00.00

R2-1 24X30 SPEED LIMIT 45 — TO BE REMOVED
M3-3 24X12 FTP-17-4 30X24 SOUTH 817 — TO BE REMOVED
R2-1 24X30 SPEED LIMIT 45 — TO BE REMOVED
R3-4 24X24 — TO BE REMOVED
FTP-47-4 24X30 BUCKLE UP IT'S THE LAW — TO BE REMOVED
R7-4C 18X24 NO STANDING OR STOPPING — TO BE REMOVED
I-2 30X24 ENTERING MIAMI-DADE COUNTY — TO BE REMOVED
M3-1 24X12 NORTH FTP-16-4 30X36 FLORIDA'S TURNPIKE — TO BE REMOVED
R3-2 24X24
CARRIE P. MEEK BOULEVARD
ONE WAY
DO NOT ENTER
STADIUM
SPEED LIMIT 45
COUNTY LINE ROAD NW 215 ST NEXT SIGNAL

6" WHITE (TYP.)
6" YELLOW (TYP.)
S.R. 817/NW 27TH AV.
℄ CONST. 680
685
690
8" WHITE (TYP.)
18" WHITE (TYP.)
6" WHITE (TYP.)
STA. 691+69.00 ℄ CONST. = STA. 10+00.00
BEGIN SIGNING & PAVEMENT MARKINGS
MATCH EXISTING PAVEMENT MARKINGS
S.R. 817/NW 27th AVENUE
8" WHITE (TYP.)
6'-10' SKIP 6" WHITE (TYP.)
REFLECTIVE YELLOW PAINT
24" WHITE (TYP.)
8" YELLOW (TYP.)
18" YELLOW (TYP.)
R1-1 30X30 STOP STOP
℄ S.B. TRACK (TK 02)
℄ N.B. TRACK (TK 01)
CANAL
10'-30' SKIP 6" WHITE (TYP.)
CANAL
END SIGNING & PAVEMENT MARKINGS
MATCH EXISTING PAVEMENT MARKINGS
COUNTY LINE ROAD NW 215th STREET
CANAL
570
575
580
10
15

JCT 852 — TO BE REMOVED
441 TO — TO BE REMOVED
ORLANDO — TO BE REMOVED
JCT 852 — FTP-17-4 30X24, M2-1 21X15
M6-1R 21X15, 441 M1-4S 30X24, TO M4-5 24X12
MDTA BUSES COUNTY LINE ROAD — TO BE REMOVED
MDTA BUSES COUNTY LINE ROAD
FLORIDA'S TURNPIKE NORTH — FTP-16-4 30X36, M3-1 24X12
FLORIDA'S TURNPIKE NORTH — TO BE REMOVED
852 EAST — TO BE REMOVED
M6-1R 21X15, FTP-17-4 852 30X24, EAST M3-2 24X12
TO BE REMOVED
BUSES ONLY
ENTERING BROWARD COUNTY
MIRAMAR CITY LIMITS
END PROJECT STA. 577+39.00
℄ CONST. NW 215 ST.

NW 215th STREET STATION (FOR ADDITIONAL INFORMATION REFER TO ARCHITECTURAL AND STRUCTURAL PLANS)

SUBJECT TO CHANGE

W.L.L. Designed by	05-06 Date					
T.W. Drawn by	05-06 Date					
C.V. Checked by	05-02-06 Date					
M.A.B. Approved by	05-05-06 Date	No.	Date	By / Chk	App.	Revisions

NORTH CORRIDOR METRORAIL EXTENSION - PRELIMINARY ENGINEERING (100% SUBMITTAL)

MIAMI-DADE COUNTY — MIAMI-DADE TRANSIT

PARSONS
7600 CORPORATE CENTER DRIVE, SUITE 500
MIAMI, FLORIDA 33126
PHONE: (786) 464-1000 FAX: (786) 845-7119
CERTIFICATE OF AUTHORIZATION NO. 1838
Approved ----- Date -----

BND
CIVIL ENGINEERING • ENVIRONMENTAL • AIRPORT • CONSTRUCTION MANAGEMENT • TRANSPORTATION
1200 NW 78 AVENUE, SUITE 400
MIAMI, FLORIDA 33126 - (305) 599-8495
Approved MICHAEL A. BUDALL, P.E. Date -----

SIGNING AND PAVEMENT MARKINGS

SIGNING AND PAVEMENT MARKING PLAN

Scale 1" = 100' | Drawing SPM-37 | Sheet 516

SIGNALIZATION GENERAL NOTES

1. THE CONTRACTOR SHALL PERFORM AN INVENTORY OF THE EXISTING INTERSECTIONS PRIOR TO THE BEGINNING CONSTRUCTION ACTIVITIES. A WRITTEN REPORT WILL BE PREPARED LISTING ALL SIGNAL ITEMS OPERABLE AND INOPERABLE. THE COMPLETED REPORT WILL BE FORWARDED TO THE PROJECT ENGINEER WITH COPIES TO THE MAINTAINING AGENCY PRIOR TO BEGINNING CONSTRUCTION.

2. IF MAST ARM POLES ARE USED JOINT-USE WITH STREET LIGHTING, SEPARATE ELECTRICAL CIRCUITS AND SERVICE ASSEMBLIES SHALL BE USED. STREET LIGHTING CIRCUIT VOLTAGES SHOULD NEVER EXCEED THAT OF THE SIGNAL VOLTAGE OF 120 VOLTS AC.

3. INTERCONNECT CONDUIT AT CROSSING INTERSECTIONS OR CORRIDORS SHALL BE TIED INTO THE CONTROLLER CABINETS.

4. THE CONTRACTOR SHALL USE LIGHT EMITTING DIODE (LED) FOR THE RED INDICATION AND INCANDESCENT LAMPS FOR THE YELLOW AND GREEN INDICATIONS.

5. GOVERNING STANDARDS AND SPECIFICATIONS ARE: THE DESIGN STANDARDS OF 2004, THE FLORIDA DEPARTMENT OF TRANSPORTATION STANDARD SPECIFICATION FOR ROAD AND BRIDGE CONSTRUCTION AND THE MIAMI-DADE COUNTY TECHNICAL SPECIAL PROVISIONS FOR TRAFFIC SIGNALS.

6. THE SIGNAL-MAINTAINING AGENCY IS: MIAMI -DADE COUNTY PUBLIC WORKS DEPARTMENT TRAFFIC SIGNAL & SIGNS DIVISION.

7. EXISTING COMMUNICATIONS OR COMMAND WIRE CONNECTIONS SHALL BE MAINTAINED AT ALL SIGNALIZED LOCATIONS DURING CONSTRUCTION. THIS SHALL INCLUDE INTERCONNECT, RAILROAD FLASHING BEACONS, RAILROAD PRE-EMPTION, FIRE PREEMPTION AND SCHOOL ZONE FLASHERS. CONTRACTORS SHALL PROVIDE TEMPORARY LINES AND CONNECTIONS IF NECESSARY. COST OF MAINTAINING COMMUNICATION, INCLUDING TEMPORARY LINES AND CONNECTIONS SHALL BE INCLUDED IN PAY ITEM NUMBER 102-1, MAINTENANCE OF TRAFFIC.

8. THE CONTRACTOR SHALL NOTIFY THE MAINTAINING AGENCY AT LEAST FORTY-EIGHT (48) HOURS IN ADVANCE OF ANY WORK TO BE CARRIED OUT AT ANY SIGNAL RELATED INSTALLATION.

9. MAST ARM POLE CONCRETE FOUNDATION IS TO BE POURED IN ONE SINGLE POUR WITH ITS TOP AT THE GRADE AND SLOPE OF THE FINISHED SIDEWALK. FOUNDATIONS NOT IN COMPLIANCE WITH THESE REQUIREMENTS SHALL BE COMPLETELY REMOVED AND POURED AGAIN AT THE CONTRACTOR'S EXPENSE.

10. PULL BOXES, MAST ARM FOUNDATIONS AND CONTROLLER FOUNDATIONS SHALL HAVE A MINIMUM 4" CLEARANCE FROM ALL JOINTS AND EDGE OF SIDEWALK. THERE SHALL BE NO EXPANSION MATERIAL AROUND PULL BOXES, MAST ARM FOUNDATIONS AND CONTROLLER FOUNDATIONS. PULL BOXES SHALL NOT BE PLACED IN PEDESTRIAN RAMPS.

11. THE CONTRACTOR WILL PROVIDE TWO (2) SETS OF AS-BUILT DRAWINGS AT THE TIME OF INSPECTIONS.

12. THE CONTRACTOR RESPONSE TIME TO ALL REPORTED MALFUNCTIONS OF TRAFFIC SIGNAL WITHIN THE PROJECT LIMITS SHALL BE NO MORE THAN TWO (2) HOURS, AND SHALL RESTORE ALL MALFUNCTIONING TRAFFIC SIGNAL EQUIPMENT TO ITS LEVEL OF OPERATION PRIOR TO MALFUNCTION WITHIN TWENTY-FOUR (24) HOURS. DURING THIS TIME THE CONTRACTOR SHALL PROVIDE, AT HIS EXPENSE, TEMPORARY TRAFFIC CONTROL DEVICES, FLAGMAN PERSONNEL, AND LAW ENFORCEMENT PERSONNEL AS NECESSARY TO MAINTAIN A SAFE AND EFFICIENT FLOW OF TRAFFIC AT THE AFFECTED SIGNALIZED INTERSECTIONS. THIS WOULD INCLUDE EXCEPTION AREAS THAT NEED TO BE ADJUSTED FOR M.O.T. PHASING. THE ENGINEER SHALL APPROVE ALL MODIFICATIONS PRIOR TO THEIR IMPLEMENTATION.

13. ALL SALVAGEABLE SIGNAL EQUIPMENT THAT ARE REMOVED MUST BE DELIVERED AND UNLOADED AT THE.
MIAMI-DADE COUNTY TRAFFIC SIGNALS & SIGNS DIVISION
ATTN: BOB WILLIAMS
7100 N.W. 36TH STREET
MIAMI, FLORIDA 33166
RECEIPTS MUST BE OBTAINED FROM THE ABOVE AGENCY AND SUBMITTED TO THE PROJECT ENGINEER TO RECEIVE PAYMENT FOR REMOVAL ITEMS.
(COST TO BE INCLUDED IN PAY ITEM 110-86 DELIVERY OF SALVAGEABLE MATERIALS).

14. SIGNAL EQUIPMENT CONSIDERED SALVAGEABLE IS AS FOLLOWS:

CONTROLLERS, CONTROLLER CABINETS, CONTROLLER HARDWARE AND SOFTWARE, FLASHERS, COMMUNICATION DEVICES AND HARDWARE, SIGNAL HEADS, MAST-ARM POLES AND ASSOCIATED HARDWARE. ALL OTHER EQUIPMENT SHALL BE DISPOSED OF AT THE CONTRACTOR'S EXPENSE.

15. THE CONTRACTOR SHALL NOTIFY THE MIAMI-DADE TRANSIT IN WRITING, NO LESS THAN 14 WORKING DAYS IN ADVANCE OF THE NEED OF ELECTRICAL POWER SERVICE HOOKUPS OF SIGNALIZATION / STREET LIGHTING FACILITIES.THE CONTRACTOR SHALL SUBMIT A LETTER OF REQUEST ALONG WITH AN AFFIDAVIT OF GENERAL ELECTRICAL WORK, SIGNED AND CERTIFIED BY A MASTER ELECTRICIAN.

16. TWO FULL BUSINESS DAYS PRIOR TO DIGGING THE CONTRACTOR SHALL CALL SUNSHINE STATE ONE CALL OF FLORIDA, TELEPHONE NUMBER 1-800-432-4770, AND THE UTILITY OWNER AND REQUEST UTILITY LOCATIONS. A CONTRACTOR'S REPRESENTATIVE MUST BE PRESENT DURING UTILITY COMPANY LOCATIONS OF THEIR FACILITIES.

17. UTILITY OWNERS:

COMPANY	CONTACT	TELEPHONE NO.
ADELPHIA COMMNUNICATIONS	MERCEDES ANDERSON	305-238-7690
BROWARD COUNTY GES-WATER SUPPLY	EVA FLORIAN	954-831-0916
COMCAST CABLE	THOMAS CARROLL	954-534-7417
FLORIDA CITY GAS	ALAN WILLIAMS	305-694-6870
CITY OF NORTH MIAMI	NINI BALAURAT	305-787-1006
CITY OF MIRAMAR	HENRY TALTON	954-602-3325
MIAMI DADE COMMUNITY COLLEGE	ROBERT BEALL	305-237-0869
FLORIDA GAS TRANSMISSION CO.	JOSEPH E. SANCHEZ	407-838-7171
FLORIDA POWER AND LIGHT	TRACY STERN	305-442-5966
FPL FIBERNET	NOEL REESE	305-552-3249
MCI	DEAN BOYERS	972-729-6016
MIAMI DADE WATER AND SEWER	PHILLIP TORRES	305-669-7658
XO COMMUNICATIONS	TERESA MILLER	703-547-2000
NORTH MIAMI BEACH PUBLIC WORKS DEPT.	MRS. MARCH	305-948-2967
PEOPLES GAS-MIAMI	ANGEL A. QUANT	305-573-3820
PROGRESS TELECOM	RICHARD SHEILDS	727-471-5336
QWEST COMMUNICATIONS	KIM JORDAN	1-800-283-4237
BELLSOUTH SOUTH BROWARD	AMZI M. POSTEN	954-723-2540
BELLSOUTH	STEVEN B. MASSIE	305-222-8745
TCG SOUTH FLORIDA	BILL HAM	407-578-8000
TRAFFIC CONTROL DEVICES	FRED HORN	407-869-5316
GLOBAL CROSSING COMMUNICATIONS, INC.	BRUCE NACHREINER	954-924-5524

UTILITY OWNERS CONT.:

COMPANY	CONTACT	TELEPHONE NO.
WILTEL COMMUNICATIONS	RUSSELL RYAN	1-888-265-2283
FDOT	HARVEY SHONE	305-470-5458
SFWMD	BEVERLY MILLER	561-682-6979
MIAMI DADE COUNTY PUBLIC WORKS DEPT.	OSCAR RUBIO	305-592-8925
CITY OF OPA LOCKA	WAYNE EMMONS	786-426-3786
CITY OF MIAMI	FRANCIS MITCHELL	305-416-1218
TELCOVE	TONY KOWALESKI	954-217-6700
XSPEDIUS FIBER GROUP	TOM LEWIS	954-334-0308
DERM	MARIE K. HALL	305-372-6438

SUBJECT TO CHANGE

W.L.L. Designed by	05-06 Date				
J.N. / T.W. Drawn by	05-06 Date				
K.K. Checked by	05-02-06 Date				
T.B. Approved by	05-05-06 Date	No.	Date	By / Chk	App. Revisions

NORTH CORRIDOR METRORAIL EXTENSION - PRELIMINARY ENGINEERING (100% SUBMITTAL)

MIAMI-DADE COUNTY — MIAMI-DADE TRANSIT

PARSONS
7600 CORPORATE CENTER DRIVE, SUITE 500
MIAMI, FLORIDA 33126
PHONE: (786) 464-1000 FAX: (786) 845-7119
CERTIFICATE OF AUTHORIZATION NO. 1838
Approved ----- Date -----

BND
CIVIL ENGINEERING • ENVIRONMENTAL • AIRPORT • CONSTRUCTION MANAGEMENT • TRANSPORTATION
1200 NW 78 AVENUE, SUITE 400
MIAMI, FLORIDA 33126 - (305) 599-8495
Approved T. BUDALL, P.E. Date -----

ROADWAY - SIGNAL PLANS

GENERAL NOTES

Scale N.T.S. Drawing RSP-01 Sheet 5

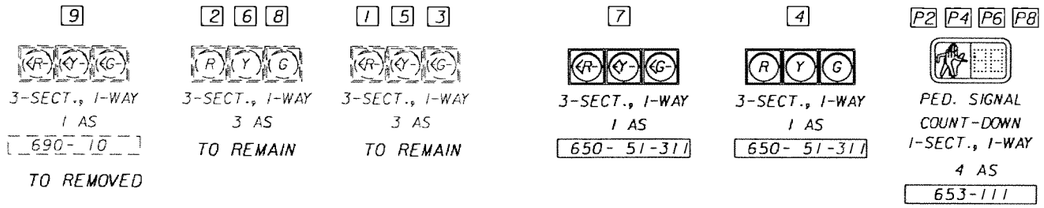

SIGNAL HEAD DETAIL

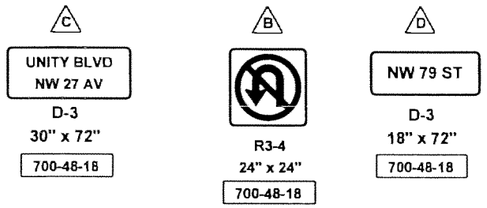

SERIES "C" LETTERS
8" CAPITALS
10" NUMERALS

GENERAL NOTES

1. MAJOR STREET IS NW 27TH AVENUE
   MINOR STREET IS NW 79TH STREET
2. FLASHING OPERATION: EXISTING TO REMAIN
3. EXISTING F.D.O.T. STANDARD SIGNAL OPERATION PLAN TO REMAIN
4. MAINTAINING AGENCY IS MIAMI-DADE COUNTY TRAFFIC ENGINEERING
5. SIGNAL TIMING TO BE PROVIDED BY MAINTAINING AGENCY

DETECTORS FOR LOOPS				
LOOP	NO. OF LOOPS	NO. OF NEW DETS.	NO. OF EXIST. DETS.	DELAY TIME (SEC)
L-1	1	1	-	-
L-3	1	1	-	-
L-5	1	1	-	-
L-7	1	1	-	-
L-2	3	1	-	-
L-4	3	1	-	-
L-6	2	1	-	-
L-8	2	1	-	-

DELAY TIME IS INITIAL AND MAY REQUIRE FIELD ADJUSTING AS DIRECTED BY PROJECT ENGINEER.

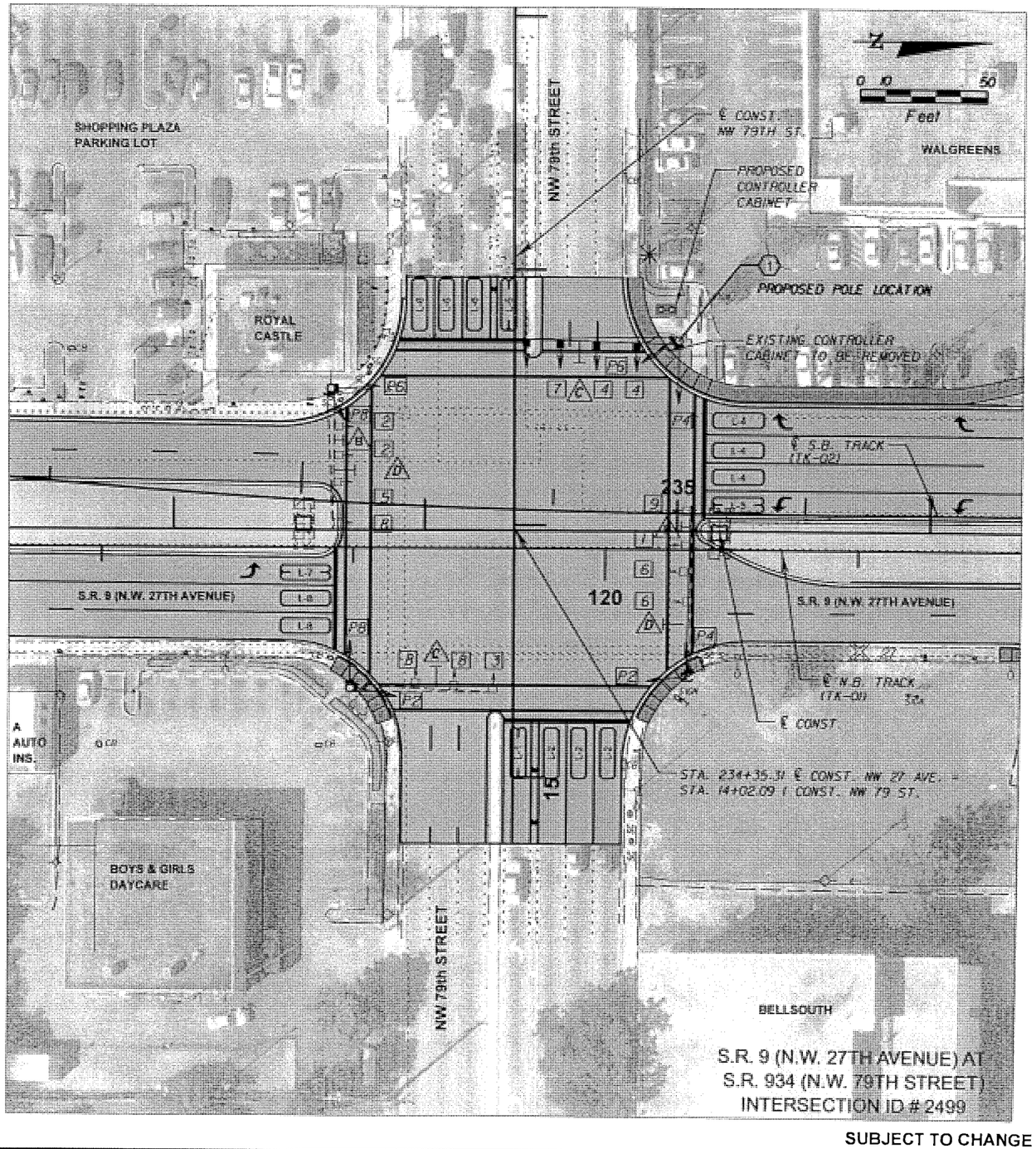

SUBJECT TO CHANGE

W.L.L. Designed by	05-06 Date					
J.N. / T.W. Drawn by	05-06 Date					
C.V. Checked by	05-02-06 Date					
M.A.B. Approved by	05-05-06 Date	No.	Date	By / Chk	App.	Revisions

NORTH CORRIDOR METRORAIL EXTENSION - PRELIMINARY ENGINEERING (100% SUBMITTAL)

MIAMI-DADE COUNTY

MIAMI-DADE TRANSIT

PARSONS
7600 CORPORATE CENTER DRIVE, SUITE 500
MIAMI, FLORIDA 33126
PHONE: (786) 464-1000 FAX: (786) 845-7119
CERTIFICATE OF AUTHORIZATION NO. 1838

Approved | Date

BND
CIVIL ENGINEERING • ENVIRONMENTAL • AIRPORT • CONSTRUCTION MANAGEMENT • TRANSPORTATION
1200 NW 78 AVENUE, SUITE 400
MIAMI, FLORIDA 33126 - (305) 599-8495

Approved MICHAEL A. BUDALL, P.E. | Date

ROADWAY - SIGNAL PLANS

SIGNALIZATION PLAN

Scale 1" = 50' | Drawing RSP-02 | Sheet 51B

5 7 2
(R) (Y) (G)
3-SECT., 1-WAY
3 AS
TO REMAIN

6
(R) (Y) (G)
3-SECT., 1-WAY
1 AS
TO REMAIN

4
(R) (Y) (G)
3-SECT., 1-WAY
1 AS
690-10
TO BE RELOCATED

P2 P4
PED. SIGNAL
COUNT-DOWN
1-SECT., 1-WAY
2 AS
653-111

SIGNAL HEAD DETAIL

C
UNITY BLVD
NW 27 AV
D-3
30" x 72"
700-48-18

B
R3-4
24" x 24"
700-48-18

D
NW 84 ST
D-3
18" x 72"
700-48-18

SERIES "C" LETTERS
8" CAPITALS
10" NUMERALS

GENERAL NOTES

1. MAJOR STREET IS NW 27TH AVENUE
   MINOR STREET IS NW 84TH STREET
2. FLASHING OPERATION: EXISTING TO REMAIN
3. EXISTING F.D.O.T. STANDARD SIGNAL OPERATION PLAN TO REMAIN
4. MAINTAINING AGENCY IS MIAMI-DADE COUNTY TRAFFIC ENGINEERING
5. SIGNAL TIMING TO BE PROVIDED BY MAINTAINING AGENCY

DETECTORS FOR LOOPS				
LOOP	NO. OF LOOPS	NO. OF NEW DETS.	NO. OF EXIST. DETS.	DELAY TIME (SEC)
L-1	1	1	-	-
L- 5	1	1	-	-
L-2	2	1	-	-
L- 4	2	1	-	-
L-6	1	1	-	-

DELAY TIME IS INITIAL AND MAY REQUIRE FIELD ADJUSTING AS DIRECTED BY PROJECT ENGINEER.

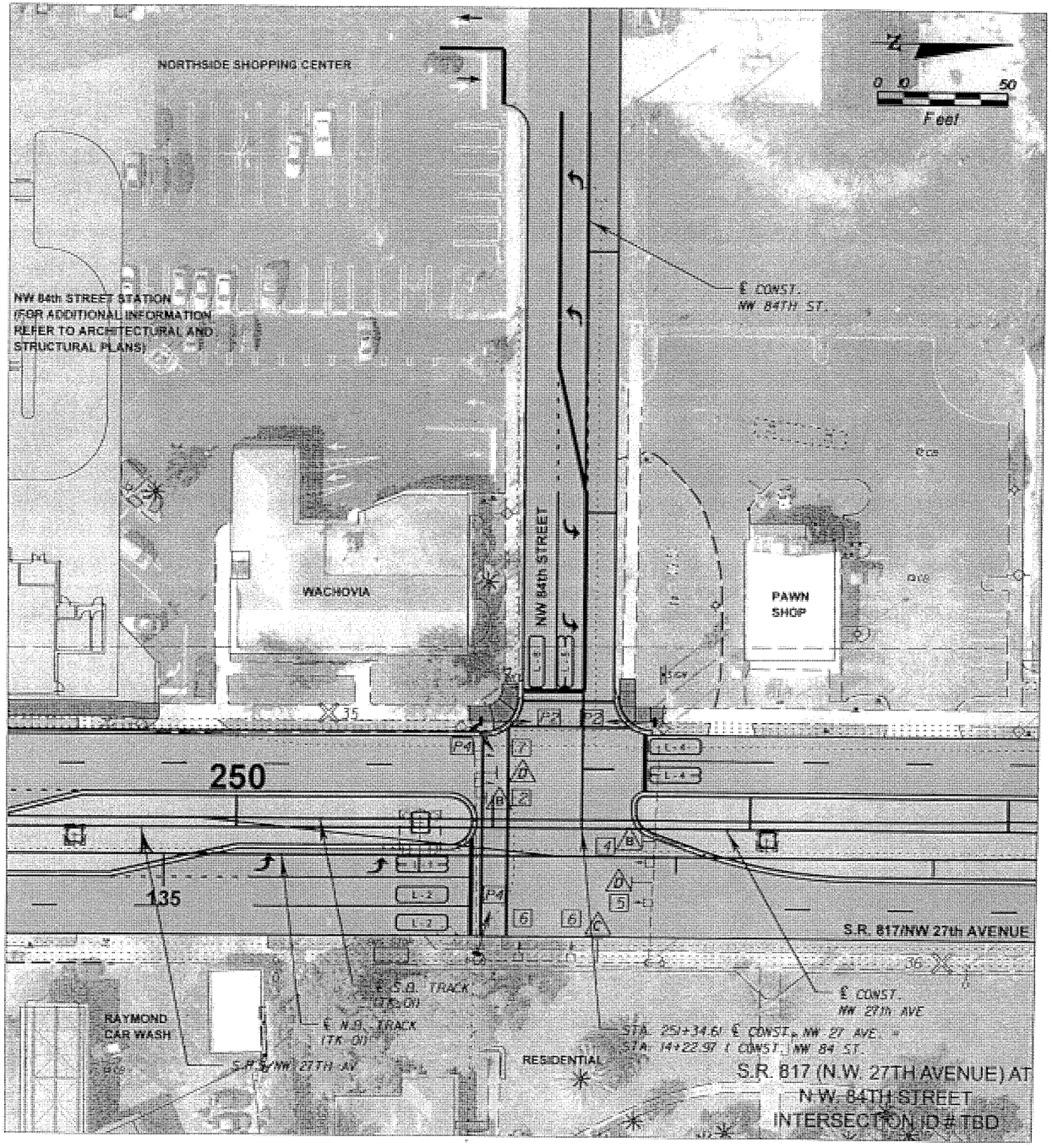

SUBJECT TO CHANGE

W.L.L.	05-06					
Designed by	Date					
J.N. / T.W.	05-06					
Drawn by	Date					
C.V.	05-02-06					
Checked by	Date					
M.A.B.	05-05-06					
Approved by	Date	No.	Date	By / CHK	App.	Revisions

NORTH CORRIDOR METRORAIL EXTENSION - PRELIMINARY ENGINEERING (100% SUBMITTAL)

ROADWAY - SIGNAL PLANS

MIAMI-DADE COUNTY
MIAMI-DADE TRANSIT

PARSONS
7600 CORPORATE CENTER DRIVE, SUITE 500
MIAMI, FLORIDA 33126
PHONE: (786) 464-1000 FAX: (786) 845-7119
CERTIFICATE OF AUTHORIZATION NO. 1838
Approved Date

BND
CIVIL ENGINEERING · ENVIRONMENTAL · AIRPORT · CONSTRUCTION MANAGEMENT · TRANSPORTATION
1200 NW 78 AVENUE, SUITE 400
MIAMI, FLORIDA 33126 · (305) 599-8495
Approved MICHAEL A. BUDALL, P.E. Date

SIGNALIZATION PLAN

Scale 1" = 50' | Drawing RSP-03 | Sheet 519

1 3 5 7

(R) (Y) (G)

3-SECT., 1-WAY
4 AS
650- 51-311

2 4

(R) (Y) (G)

3-SECT., 1-WAY
2 AS
650- 51-311

P2 P4 P6

PED. SIGNAL
COUNT-DOWN
1-SECT., 1-WAY
3 AS
653-111

SIGNAL HEAD DETAIL

B

NW 117 ST.

D-3
18" x 72"
700-48-18

C

UNITY BLVD
NW 27 AV

D-3
30" x 72"
700-48-18

D

R3-4
24" x 24"
700-48-18

GENERAL NOTES

1. MAJOR STREET IS NW 27TH AVENUE
   MINOR STREET IS NW 117TH STREET
2. FLASHING OPERATION: EXISTING TO REMAIN
3. EXISTING F.D.O.T. STANDARD SIGNAL OPERATION PLAN TO REMAIN
4. MAINTAINING AGENCY IS MIAMI-DADE COUNTY TRAFFIC ENGINEERING
5. SIGNAL TIMING TO BE PROVIDED BY MAINTAINING AGENCY

DETECTORS FOR LOOPS				
LOOP	NO. OF LOOPS	NO. OF NEW DETS.	NO. OF EXIST. DETS.	DELAY TIME (SEC)
L-1	1	1	-	-
L-5	1	1	-	-
L-2	3	1	-	-
L-4	1	1	-	-
L-6	3	1	-	-
L-8	1	1	-	-

DELAY TIME IS INITIAL AND MAY REQUIRE FIELD ADJUSTING AS DIRECTED BY PROJECT ENGINEER.

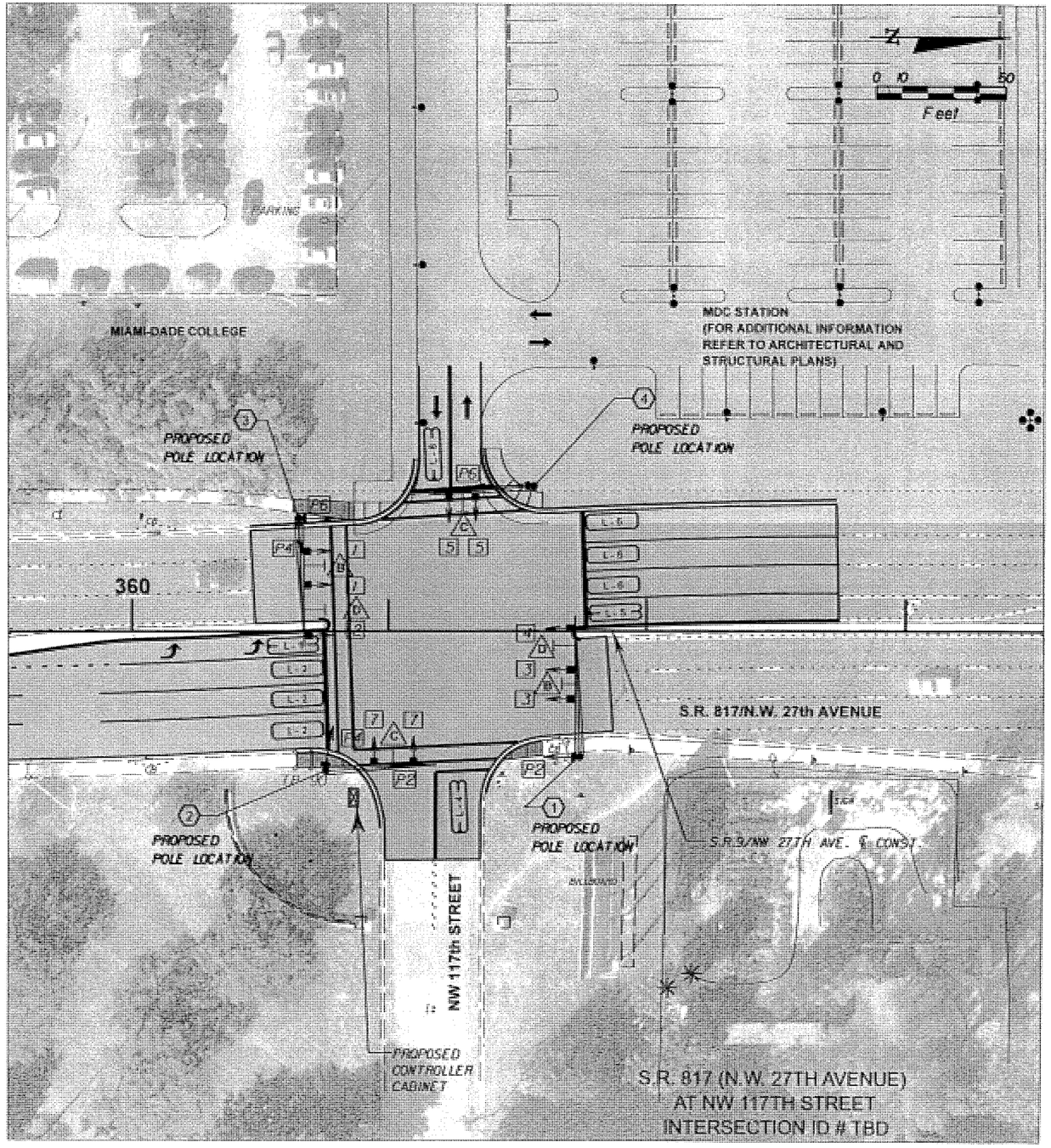

SUBJECT TO CHANGE

W.L.L. Designed by	05-06 Date					
J.N. / T.W. Drawn by	05-06 Date					
C.V. Checked by	05-02-06 Date					
M.A.B. Approved by	05-05-06 Date	No.	Date	By / Chk	App.	Revisions

NORTH CORRIDOR METRORAIL EXTENSION - PRELIMINARY ENGINEERING (100% SUBMITTAL)

MIAMI-DADE COUNTY

MIAMI-DADE TRANSIT

PARSONS
7600 CORPORATE CENTER DRIVE, SUITE 500
MIAMI, FLORIDA 33126
PHONE: (786) 464-1000 FAX: (786) 845-7119
CERTIFICATE OF AUTHORIZATION NO. 1838
Approved Date

BND
CIVIL ENGINEERING • ENVIRONMENTAL • AIRPORT • CONSTRUCTION MANAGEMENT • TRANSPORTATION
1200 NW 78 AVENUE, SUITE 400
MIAMI, FLORIDA 33126 - (305) 599-8495
Approved MICHAEL A. BUDALL, P.E. Date

ROADWAY - SIGNAL PLANS

SIGNALIZATION PLAN

Scale 1" = 50' | Drawing RSP-04 | Sheet 520

1 3 5 7 — (R) (Y) (G)

3-SECT., 1-WAY
4 AS
650- 51-311

2 4 6 8 — (R-) (Y-) (G-)

3-SECT., 1-WAY
4 AS
650- 51-311

P2 P4 P6

PED. SIGNAL
COUNT-DOWN
1-SECT., 1-WAY
3 AS
653-111

SIGNAL HEAD DETAIL

A

EAST ROAD

D-3
12" x 60"
700-48-18

B

NW 119 ST
GRATIGNY RWY

D-3
24" x 60"
700-48-18

SERIES "C" LETTERS
6" CAPITALS
8" NUMERALS

C

R3-4
24" x 24"
700-48-18

GENERAL NOTES

1. MAJOR STREET IS NW 27TH AVENUE
   MINOR STREET IS NW 119TH STREET
2. FLASHING OPERATION: EXISTING TO REMAIN
3. EXISTING F.D.O.T. STANDARD SIGNAL OPERATION PLAN TO REMAIN
4. MAINTAINING AGENCY IS MIAMI-DADE COUNTY TRAFFIC ENGINEERING
5. SIGNAL TIMING TO BE PROVIDED BY MAINTAINING AGENCY

DETECTORS FOR LOOPS		
LOOP	NO. OF LOOPS	NO. OF NEW DETS.
L- 1	1	1
L- 3	1	1
L- 5	1	1
L- 7	1	1
L- 2	4	2
L- 4	1	1
L- 6	4	2
L- 8	1	1

DELAY TIME IS INITIAL AND MAY REQUIRE FIELD ADJUSTING AS DIRECTED BY PROJECT ENGINEER.

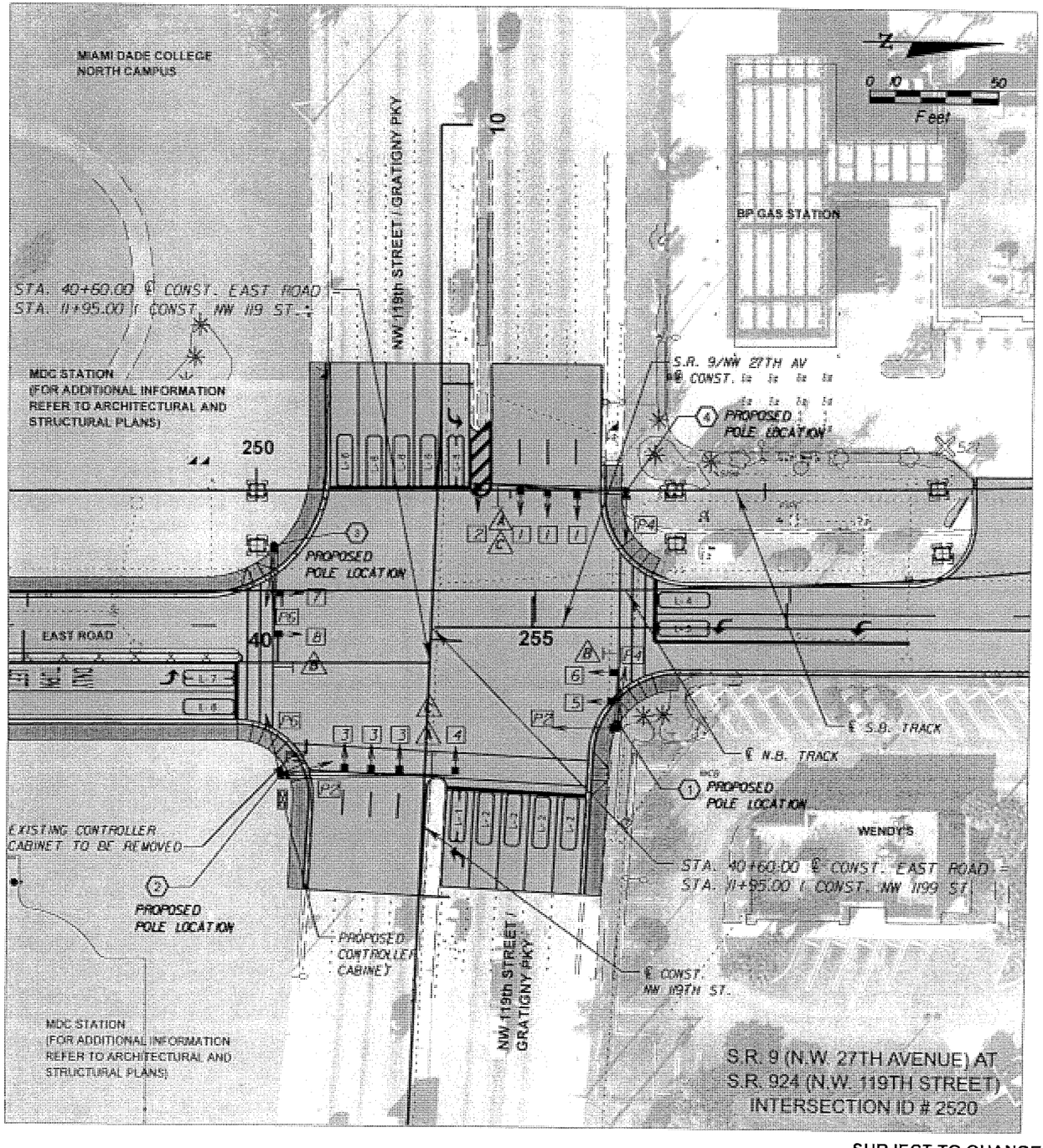

SUBJECT TO CHANGE

W.L.L. Designed by	05-06 Date					
J.N. / T.W. Drawn by	05-06 Date					
C.V. Checked by	05-02-06 Date					
M.A.B. Approved by	05-05-06 Date	No.	Date	By / Chk	App.	Revisions

NORTH CORRIDOR METRORAIL EXTENSION - PRELIMINARY ENGINEERING (100% SUBMITTAL)

MIAMI-DADE COUNTY — MIAMI-DADE TRANSIT

PARSONS
7600 CORPORATE CENTER DRIVE, SUITE 500
MIAMI, FLORIDA 33126
PHONE: (786) 464-1000 FAX: (786) 845-7119
CERTIFICATE OF AUTHORIZATION NO. 1838
Approved ____ Date ____

BND
CIVIL ENGINEERING • ENVIRONMENTAL • AIRPORT • CONSTRUCTION MANAGEMENT • TRANSPORTATION
1200 NW 78 AVENUE, SUITE 400
MIAMI, FLORIDA 33126 - (305) 599-8495
Approved MICHAEL A. BUDALL, P.E. Date ____

ROADWAY - SIGNAL PLANS

SIGNALIZATION PLAN

Scale 1" = 50' | Drawing RSP-05 | Sheet 521

2

3-SECT., 1-WAY
1 AS
690-10

TO BE RELOCATED

5

3-SECT., 1-WAY
1 AS
650-51-311

6 8

3-SECT., 1-WAY
2 AS

TO REMAIN

4

3-SECT., 1-WAY
1 AS

TO REMAIN

P2 P4 P6

PED. SIGNAL
COUNT-DOWN
1-SECT., 1-WAY
3 AS
653-111

SIGNAL HEAD DETAIL

C

UNITY BLVD
NW 27 AV

D-3
30" x 72"
700-48-18

B

R3-4
24" x 24"
700-48-18

D

ALI BABA AVE

D-3
30" x 72"
700-48-18

SERIES "C" LETTERS
8" CAPITALS
10" NUMERALS

GENERAL NOTES

1. MAJOR STREET IS NW 27TH AVENUE
   MINOR STREET IS NW ALI BABA AVENUE
2. FLASHING OPERATION: EXISTING TO REMAIN
3. EXISTING F.D.O.T. STANDARD SIGNAL OPERATION PLAN TO REMAIN
4. MAINTAINING AGENCY IS MIAMI-DADE COUNTY TRAFFIC ENGINEERING
5. SIGNAL TIMING TO BE PROVIDED BY MAINTAINING AGENCY

DETECTORS FOR LOOPS				
LOOP	NO. OF LOOPS	NO. OF NEW DETS.	NO. OF EXIST. DETS.	DELAY TIME (SEC)
L- 1	1	1	-	-
L- 3	1	1	-	-
L- 5	1	1	-	-
L- 7	1	1	-	-
L- 2	2	1	-	-
L- 4	3	1	-	-
L- 6	2	1	-	-
L- 8	3	1	-	-

DELAY TIME IS INITIAL AND MAY REQUIRE FIELD ADJUSTING AS DIRECTED BY PROJECT ENGINEER.

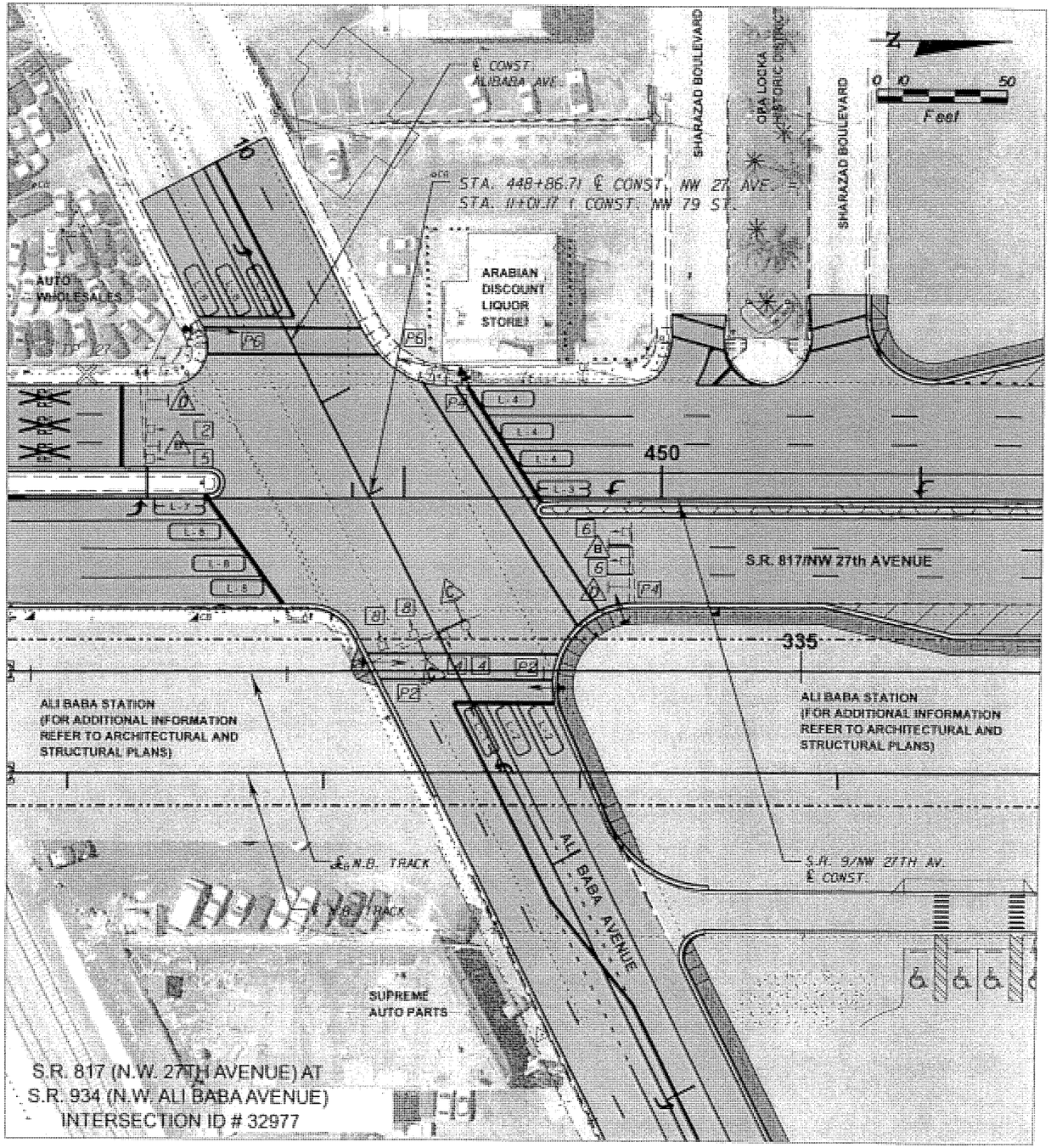

SUBJECT TO CHANGE

W.L.L. Designed by	05-06 Date					
J.N. / T.W. Drawn by	05-06 Date					
C.V. Checked by	05-02-06 Date					
M.A.B. Approved by	05-05-06 Date	No.	Date	By / Chk	App.	Revisions

NORTH CORRIDOR METRORAIL EXTENSION - PRELIMINARY ENGINEERING (100% SUBMITTAL)

ROADWAY - SIGNAL PLANS

MIAMI-DADE COUNTY

MIAMI-DADE TRANSIT

PARSONS
7600 CORPORATE CENTER DRIVE, SUITE 500
MIAMI, FLORIDA 33126
PHONE: (786) 464-1000 FAX: (786) 845-7119
CERTIFICATE OF AUTHORIZATION NO. 1838
Approved Date

BND
CIVIL ENGINEERING • ENVIRONMENTAL • AIRPORT • CONSTRUCTION MANAGEMENT • TRANSPORTATION
1200 NW 78 AVENUE, SUITE 400
MIAMI, FLORIDA 33126 - (305) 599-8495
Approved MICHAEL A. BUDALL, P.E. Date

SIGNALIZATION PLAN

Scale 1" = 50' | Drawing RSP-06 | Sheet 522

1 3 5 7

R Y G

3-SECT., 1-WAY
4 AS
690- 10

2 4

R Y G

3-SECT., 1-WAY
2 AS
650- 51-311

P2 P4

PED. SIGNAL
COUNT-DOWN
1-SECT., 1-WAY
2 AS
653-111

SIGNAL HEAD DETAIL

C

UNITY BLVD
NW 27 AV

D-3
30" x 72"
700-48-18

B

R3-4
24" x 24"
700-48-18

D

NW 163 ST

D-3
18" x 72"
700-48-18

SERIES "C" LETTERS
8" CAPITALS
10" NUMERALS

GENERAL NOTES

1. MAJOR STREET IS NW 27TH AVENUE
   MINOR STREET IS NW 163TH STREET
2. FLASHING OPERATION: EXISTING TO REMAIN
3. EXISTING F.D.O.T. STANDARD SIGNAL OPERATION PLAN TO REMAIN
4. MAINTAINING AGENCY IS MIAMI-DADE COUNTY TRAFFIC ENGINEERING
5. SIGNAL TIMING TO BE PROVIDED BY MAINTAINING AGENCY

DETECTORS FOR LOOPS				
LOOP	NO. OF LOOPS	NO. OF NEW DETS.	NO. OF EXIST. DETS.	DELAY TIME (SEC)
L-1	1	1	-	-
L-3	1	1	-	-
L-2	3	1	-	-
L-4	1	1	-	-
L-5	3	1	-	-
L-8	1	1	-	-

DELAY TIME IS INITIAL AND MAY REQUIRE FIELD ADJUSTING AS DIRECTED BY PROJECT ENGINEER.

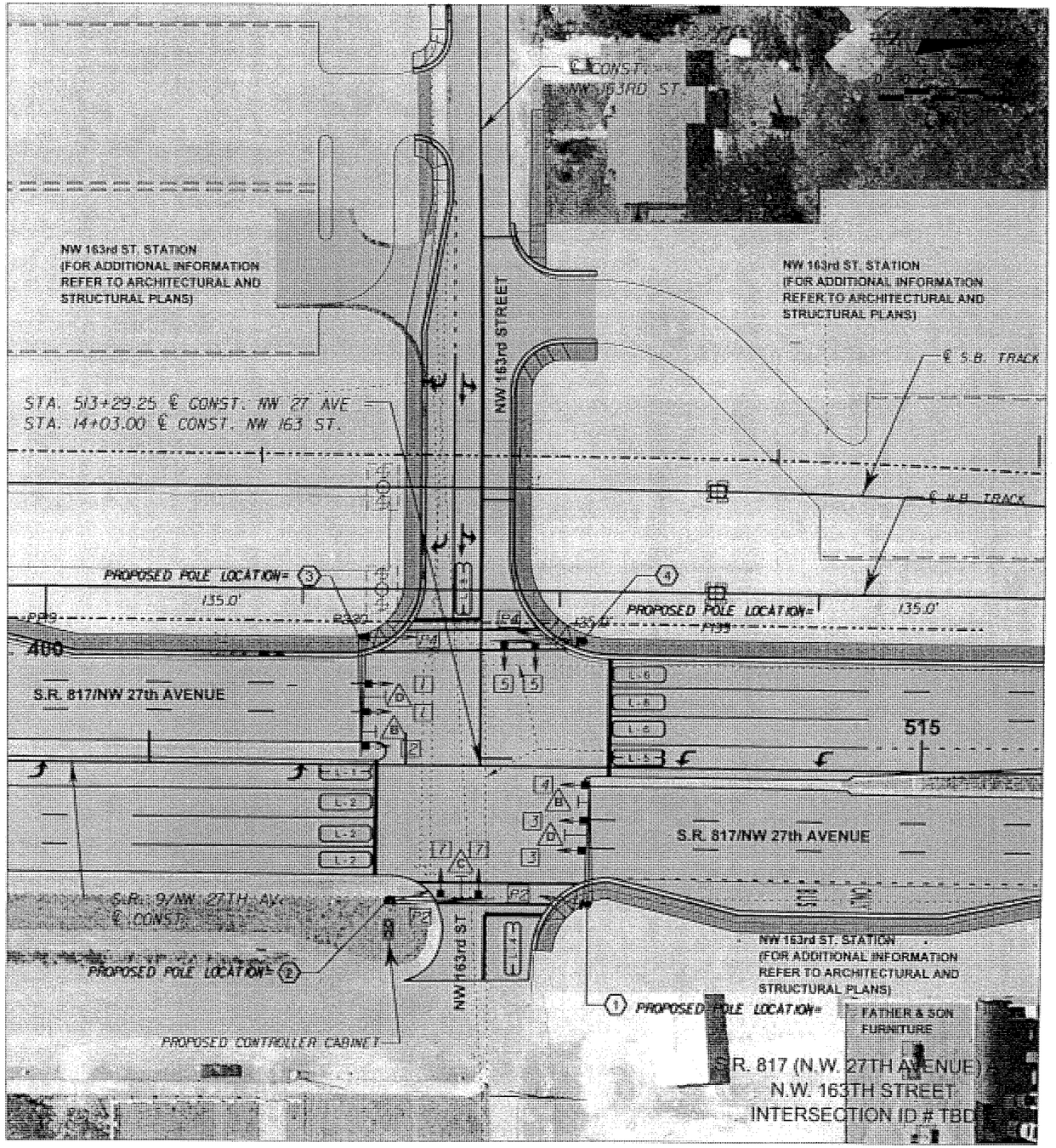

SUBJECT TO CHANGE

W.L.L. Designed by	05-06 Date					
J.N. / T.W. Drawn by	05-06 Date					
C.V. Checked by	05-02-06 Date					
M.A.B. Approved by	05-05-06 Date	No.	Date	By / Chk	App.	Revisions

NORTH CORRIDOR METRORAIL EXTENSION - PRELIMINARY ENGINEERING (100% SUBMITTAL)

MIAMI-DADE COUNTY

MIAMI-DADE TRANSIT

PARSONS
7600 CORPORATE CENTER DRIVE, SUITE 500
MIAMI, FLORIDA 33126
PHONE: (786) 464-1000 FAX: (786) 845-7119
CERTIFICATE OF AUTHORIZATION NO. 1638
Approved Date

BND
CIVIL ENGINEERING • ENVIRONMENTAL • AIRPORT • CONSTRUCTION MANAGEMENT • TRANSPORTATION
1200 NW 78 AVENUE, SUITE 400
MIAMI, FLORIDA 33126 - (305) 599-8495
Approved MICHAEL A. BUDALL, P.E. Date

ROADWAY - SIGNAL PLANS

SIGNALIZATION PLAN

Scale 1" = 50' | Drawing RSP-07 | Sheet 523

2

R Y G

3-SECT., 1-WAY
1 AS
650- 51-311

1

4R 4Y 4G

3-SECT., 1-WAY
1 AS
650- 51-311

SIGNAL HEAD DETAIL

B

R3-4
24" x 24"
700-48-18

C

UNITY BLVD
NW 27 AV
D-3
30" x 72"
700-48-18

D

CALDER RACETRACK
D-3
18" x 72"
700-48-18

SERIES "C" LETTERS
8" CAPITALS
10" NUMERALS

GENERAL NOTES

1. MAJOR STREET IS NW 27TH AVENUE
   MINOR STREET IS CALDER RACE TRACK ENTRANCE
2. FLASHING OPERATION: EXISTING TO REMAIN
3. EXISTING F.D.O.T. STANDARD SIGNAL OPERATION PLAN TO REMAIN
4. MAINTAINING AGENCY IS MIAMI-DADE COUNTY TRAFFIC ENGINEERING
5. SIGNAL TIMING TO BE PROVIDED BY MAINTAINING AGENCY

DETECTORS FOR LOOPS				
LOOP	NO. OF LOOPS	NO. OF NEW DETS.	NO. OF EXIST. DETS.	DELAY TIME (SEC)
L- 2	3	1	-	-
L- 4	1	1	-	-
L- 6	3	1	-	-

DELAY TIME IS INITIAL AND MAY REQUIRE FIELD ADJUSTING AS DIRECTED BY PROJECT ENGINEER.

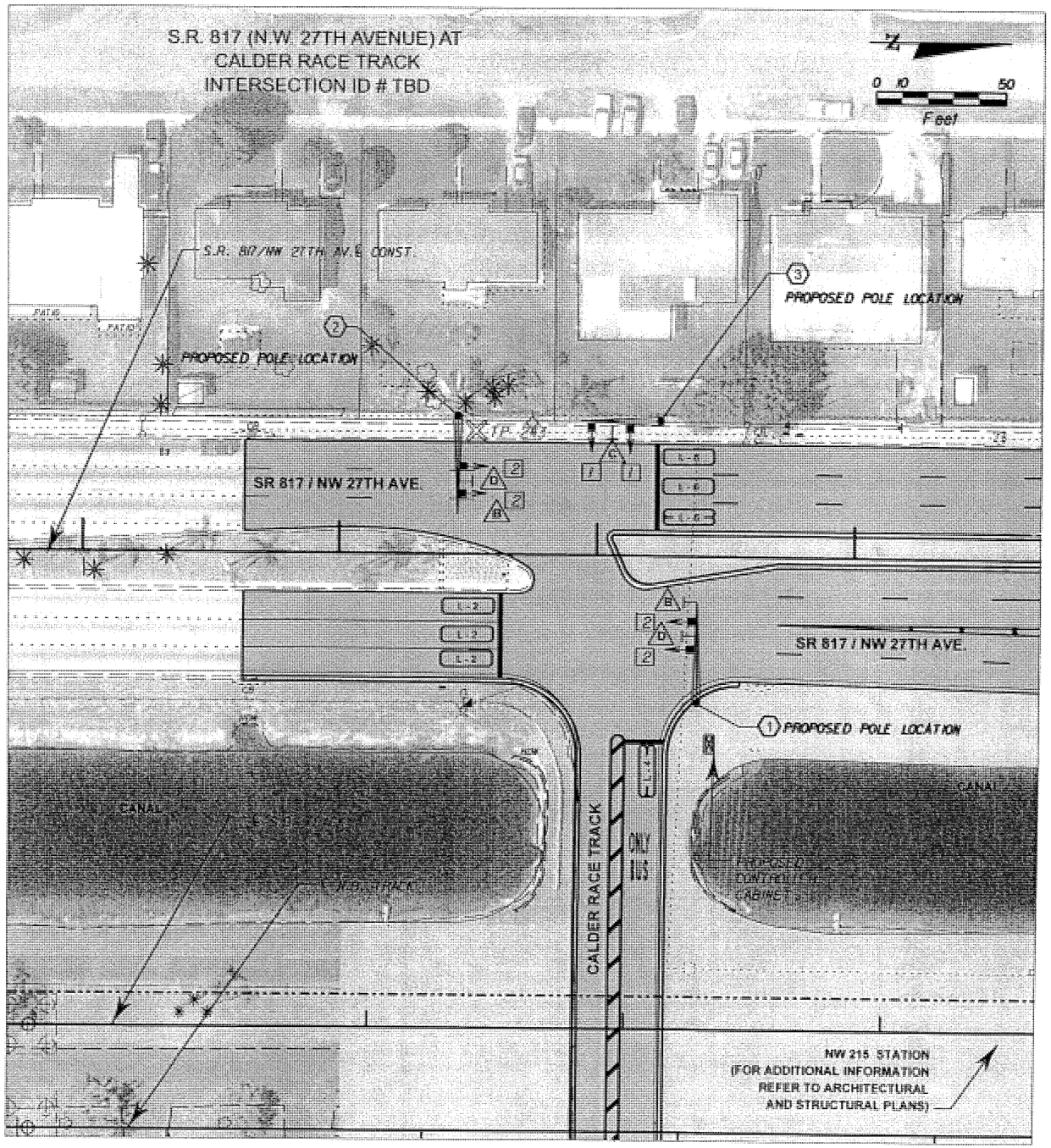

SUBJECT TO CHANGE

W.L.L. Designed by	05-06 Date					
J.N. / T.W. Drawn by	05-06 Date					
C.V. Checked by	05-02-06 Date					
M.A.B. Approved by	05-05-06 Date	No.	Date	By / Chk	App.	Revisions

NORTH CORRIDOR METRORAIL EXTENSION - PRELIMINARY ENGINEERING (100% SUBMITTAL)

MIAMI-DADE COUNTY
MIAMI-DADE TRANSIT

PARSONS
7600 CORPORATE CENTER DRIVE, SUITE 500
MIAMI, FLORIDA 33126
PHONE: (786) 454-1000 FAX: (786) 845-7119
CERTIFICATE OF AUTHORIZATION NO. 1838
Approved Date

BND
CIVIL ENGINEERING • ENVIRONMENTAL • AIRPORT • CONSTRUCTION MANAGEMENT • TRANSPORTATION
1200 NW 78 AVENUE, SUITE 400
MIAMI, FLORIDA 33126 - (305) 599-8495
Approved MICHAEL A. BUDALL, P.E. Date

ROADWAY - SIGNAL PLANS

SIGNALIZATION PLAN

Scale 1" = 50' | Drawing RSP-08 | Sheet S24

2

R Y G

3-SECT., 1-WAY
AS
650- 51-311

1

3-SECT., 1-WAY
AS
650- 51-311

3

1-SECT., 1-WAY
AS
650- 51-111

SIGNAL HEAD DETAIL

C

UNITY BLVD
NW 27 AV
D-3
30" x 72"
700-48-18

D

R3-4
24" x 24"
700-48-18

GENERAL NOTES

1. MAJOR STREET IS NW 27TH AVENUE
   MINOR STREET IS NW 215TH STREET METRORAIL PARKING ENTRANCE
2. FLASHING OPERATION: EXISTING TO REMAIN
3. EXISTING F.D.O.T. STANDARD SIGNAL OPERATION PLAN TO REMAIN
4. MAINTAINING AGENCY IS MIAMI-DADE COUNTY TRAFFIC ENGINEERING
5. SIGNAL TIMING TO BE PROVIDED BY MAINTAINING AGENCY

DETECTORS FOR LOOPS				
LOOP	NO. OF LOOPS	NO. OF NEW DETS.	NO. OF EXIST. DETS.	DELAY TIME (SEC)
L- 2	1	1		
L- 3	1	1		
L- 4	3	1		
L- 6	2	1		

DELAY TIME IS INITIAL AND MAY REQUIRE FIELD ADJUSTING AS DIRECTED BY PROJECT ENGINEER.

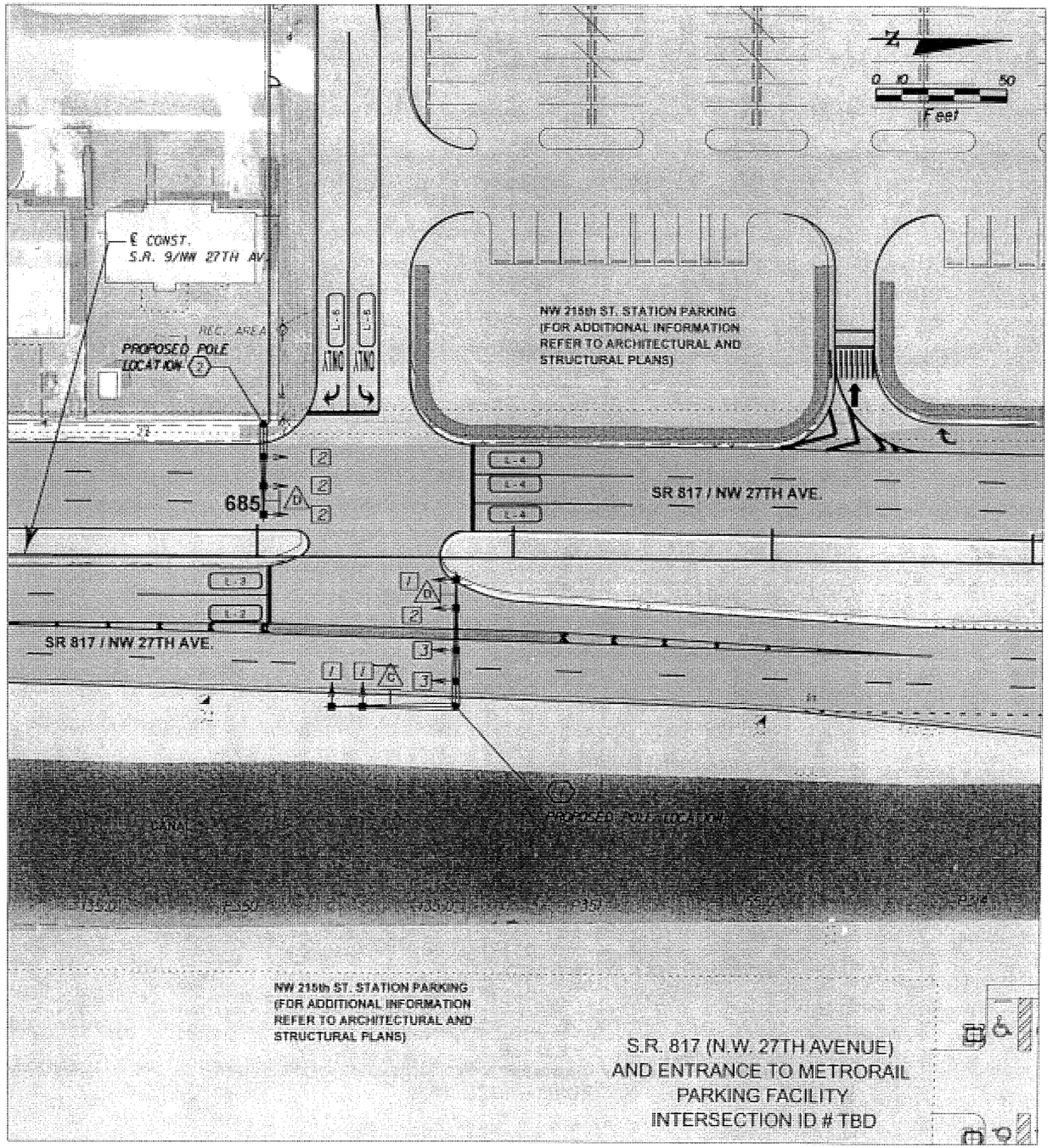

SUBJECT TO CHANGE

W.L.L. Designed by	05-06 Date					
J.N. / T.W. Drawn by	05-06 Date					
C.V. Checked by	05-02-06 Date					
M.A.B. Approved by	05-05-06 Date	No.	Date	By / Chk	App.	Revisions

NORTH CORRIDOR METRORAIL EXTENSION - PRELIMINARY ENGINEERING (100% SUBMITTAL)

MIAMI-DADE COUNTY
MIAMI-DADE TRANSIT

PARSONS
7600 CORPORATE CENTER DRIVE, SUITE 500
MIAMI, FLORIDA 33126
PHONE: (786) 464-1000 FAX: (786) 845-7119
CERTIFICATE OF AUTHORIZATION NO. 1638
Approved Date

BND
CIVIL ENGINEERING • ENVIRONMENTAL • AIRPORT • CONSTRUCTION MANAGEMENT • TRANSPORTATION
1200 NW 78 AVENUE, SUITE 400
MIAMI, FLORIDA 33126 - (305) 599-8495
Approved MICHAEL A. BUDALL, P.E. Date 5/8/2006

ROADWAY - SIGNAL PLANS

SIGNALIZATION PLAN

Scale 1" = 50' | Drawing RSP-09 | Sheet 525

MIAMI NORTH CORRIDOR FEIS

VOLUME II PART II

PRELIMINARY ENGINEERING DRAWINGS

FINAL ENVIRONMENTAL IMPACT STATEMENT

FEBRUARY 2007

MIAMI-DADE COUNTY TRANSIT

LOCALLY PREFERRED ALTERNATIVE

MIAMI-DADE COUNTY

MIAMI-DADE TRANSIT

NORTH CORRIDOR METRORAIL EXTENSION PROJECT
PRELIMINARY ENGINEERING
CONTRACT NO. TR05-NCPE

100% SUBMITTAL OF THE PRELIMINARY ENGINEERING PLANS

VOLUME II OF II

PLANS INCLUDE:

GENERAL, PASSENGER STATIONS, STRUCTURES-STATION, LANDSCAPE, ELECTRICAL, MECHANICAL, PLUMBING, FIRE PROTECTION, SYSTEMS- COMMUNICATION, TRACTION POWER, TRAIN CONTROL, AND CORROSION CONTROL

SUBJECT TO CHANGE

KJ Designed by	5-06 Date					
KJ Drawn by	5-06 Date					
JE Checked by	5-06 Date					
Approved by	Date	No.	Date	By / Chk	App.	Revisions

NORTH CORRIDOR METRORAIL EXTENSION - PRELIMINARY ENGINEERING (100% SUBMITTAL)

MIAMI-DADE COUNTY

MIAMI-DADE TRANSIT

PARSONS
7600 CORPORATE CENTER DRIVE, SUITE 500
MIAMI, FLORIDA 33126
PHONE: (786) 464-1000 FAX: (786) 845-7119
CERTIFICATE OF AUTHORIZATION NO. 1838

Approved | Date | Approved | Date

GENERAL

KEY SHEET

Scale NTS | Drawing GEN - 01 | Sheet 1

05/12/2006 05:32:57 PM s:\mdt_north\index_sheets\gen-01a.dgn

NOTES TO REVIEWER

1. THE ENCLOSED PLANS REPRESENT 100% COMPLETION OF THE OVERALL PRELIMINARY ENGINEERING PACKAGE.

2. THE PLANS ARE DIVIDED INTO TWO (2) VOLUMES:

   a. VOLUME I CONTAINS: GENERAL, TRACK, CURVE DATA, ROADWAY, REAL ESTATE ACQUISITION, UTILITY AND DRAINAGE, STRUCTURES-GUIDEWAY, BORING PLANS, TRAFFIC CONTROL, SIGNING AND PAVEMENT MARKINGS, AND ROADWAY- SIGNALS PLANS.

   b. THE VOLUME II CONTAINS: GENERAL, PASSENGER STATIONS, STRUCTURES-STATION, LANDSCAPE, ELECTRICAL, MECHANICAL, PLUMBING, FIRE PROTECTION, SYSTEMS-COMMUNICATION, TRACTION POWER, TRAIN CONTROL, AND CORROSION CONTROL.

   THE 100% PLANS HAVE BEEN REPACKAGED FROM THE 70%. THE REPACKAGING WAS DONE SO THAT VOLUME I CAN BE INCLUDED IN WITH THE FEIS PACKAGE, WITHOUT THE NEED FOR THE OTHER DETAIL PLANS INCLUDED IN VOLUME II.

3. A DECISION ON THE TWO (2) ALIGNMENT OPTIONS ((1) FLYOVER CROSSING OPTION AND (2) LEVEL CROSSING OPTION) PRESENTED IN THE 70% HAS BEEN DECIDED UPON. THE OPTION BEING TAKEN THROUGH THE FINAL DESIGN IS THE FLYOVER OPTION WHICH IS INCLUDED IN THE 100% PLANS.

4. A DECISION ON THE TWO (2) STRUCTURAL OPTIONS SHOWN IN THE 70% PLANS HAS BEEN DECIDED UPON. THE ENCLOSED STRUCTURAL PLANS HAVE TAKEN THE PRECAST POST-TENSIONED SEGMENTAL CONCRETE BOX GIRDER OPTION THROUGH TO FINAL PRELIMINARY ENGINEERING. ALL OTHER PLANS IN THE PLAN SET ARE REFERENCING THE CONCRETE BOX GIRDER PIER LOCATIONS FOR COORDINATION.

5. THE TRACTION POWER PLANS HAVE BEEN UPDATED FROM THE 70% BASED ON NEW CRITERIA AND DESIGN DIRECTION. THE NUMBER OF SUBSTATIONS HAVE BEEN REDUCED FROM 16-2.5 MW TO 10-5 MW. REFER TO THE TRACTION POWER PLANS FOR DETAILS AS WELL AS THE TRACK PLAN AND PROFILES FOR TENTATIVE LOCATIONS ALONG THE ALIGNMENT.

6. THE STATION PLATFORM AND TRACKWORK AT THE 215TH STREET STATION HAS CHANGED FROM THE 70% DUE TO THE NEED FOR VEHICLE STORAGE IN THE TAIL TRACK AS WELL AS A LIGHT MAINTENANCE TRACK. THE SHIFT IN THE STATION WAS APPROXIMATLY 300-FT SOUTH OF WHERE IT WAS SHOWN IN THE 70% PLANS. PLEASE SEE PLANS FOR RELATED CHANGES.

KJ Designed by	5-06 Date						
KJ Drawn by	5-06 Date						
JE Checked by	5-06 Date						
Approved by	Date	No.	Date	By / Chk	App.	Revisions	

NORTH CORRIDOR METRORAIL EXTENSION - PRELIMINARY ENGINEERING (100% SUBMITTAL)

GENERAL

MIAMI-DADE COUNTY

MIAMI-DADE TRANSIT

PARSONS
7600 CORPORATE CENTER DRIVE, SUITE 500
MIAMI, FLORIDA 33126
PHONE: (786) 464-1000 FAX: (786) 845-7119
CERTIFICATE OF AUTHORIZATION NO. 1838

Approved | Date | Approved | Date

NOTES TO REVIEWER

Scale N.T.S. | Drawing GEN-02 | Sheet 2

05/15/2006 02:54:49 PM s:\mdt_north\index_sheets\100%\notestoreviewer.dgn

GENERAL

SHEET NO.	DWG NO.	SHEET DESCRIPTION
1	GEN-01	KEY SHEET
2	GEN-02	NOTES TO REVIEWER
3	GEN-03	INDEX OF DRAWINGS
4	GEN-04	INDEX OF DRAWINGS
5	GEN-05	INDEX OF DRAWINGS
6	GEN-06	INDEX OF DRAWINGS
7	GEN-07	INDEX OF DRAWINGS

PASSENGER- STATIONS

SHEET NO.	DWG NO.	SHEET DESCRIPTION
8	PST-01	NW 82ND ST. STATION SITE PLAN
9	PST-02	NW 82ND ST. STATION PLAZA LEVEL PLAN
10	PST-03	NW 82ND ST. STATION MEZZANINE LEVEL PLAN
11	PST-04	NW 82ND ST. STATION PLATFORM LEVEL PLAN
12	PST-05	NW 82ND ST. STATION REFLECTED CEILING PLAN
13	PST-06	NW 82ND ST. STATION ROOF PLAN
14	PST-07	NW 82ND ST. STATION 1- EAST ELEVATION
15	PST-08	NW 82ND ST. STATION 2-WEST ELEVATION
16	PST-09	NW 82ND ST. STATION ELEVATIONS
17	PST-10	NW 82ND ST. STATION A-CROSS SECTION
18	PST-11	NW 82ND ST. STATION B-CROSS SECTION.
19	PST-12	NW 82ND ST. STATION C-CROSS SECTION
20	PST-13	NW 82ND ST. STATION D-SECTION
21	PST-14	NW 82ND ST. STATION E-SECTION
22	PST-15	NW 119TH ST. STATION SITE PLAN
23	PST-16	NW 119TH ST. STATION PLAZA LEVEL PLAN
24	PST-17	NW 119TH ST. STATION PLATFORM PLAN
25	PST-18	NW 119TH ST. STATION REFLECTED CEILING PLAN
26	PST-19	NW 119TH ST. STATION ROOF PLAN
27	PST-20	NW 119TH ST. STATION 1-EAST ELEVATIONS
28	PST-21	NW 119TH ST. STATION 2-WEST ELEVATIONS
29	PST-22	NW 119TH ST. STATION ELEVATIONS
30	PST-23	NW 119TH ST. STATION ELEVATIONS
31	PST-24	NW 119TH ST. STATION A-CROSS SECTION
32	PST-25	NW 119TH ST. STATION B-LONGITUDINAL SECTION
33	PST-26	ALI BABA AVE. STATION SITE PLAN
34	PST-27	ALI BABA AVE. STATION PLAZA LEVEL PLAN
35	PST-28	ALI BABA AVE. STATION PLATFORM PLAN
36	PST-29	ALI BABA AVE. STATION REFLECTED CEILING PLAN
37	PST-30	ALI BABA AVE. STATION ROOF PLAN
38	PST-31	ALI BABA AVE. STATION 1-EAST ELEVATIONS
39	PST-32	ALI BABA AVE. STATION 2- WEST ELEVATIONS
40	PST-33	ALI BABA AVE. STATION ELEVATIONS
41	PST-34	ALI BABA AVE. STATION ELEVATIONS
42	PST-35	ALI BABA AVE. STATION A-CROSS SECTION
43	PST-36	ALI BABA AVE. STATION B-LONGITUDINAL SECTION
44	PST-37A	NW 163RD ST. STATION SITE PLAN
45	PST-37B	NW 163RD ST. STATION SITE PLAN-CONT'D
46	PST-38	NW 163RD ST. STATION PLAZA LEVEL PLAN
47	PST-39	NW 163RD ST. STATION PLATFORM PLAN
48	PST-40	NW 163RD ST. STATION REFLECTED CEILING PLAN
49	PST-41	NW 163RD ST. STATION ROOF PLAN
50	PST-42	NW 163RD ST. STATION 1-EAST ELEVATION
51	PST-43	NW 163RD ST. STATION 2-WEST ELEVATION
52	PST-44	NW 163RD ST. STATION ELEVATIONS
53	PST-45	NW 163RD ST. STATION ELEVATIONS DETAILS
54	PST-46	NW 163RD ST. STATION A-CROSS SECTION
55	PST-47	NW 163RD ST. STATION B-LONGITUDINAL SECTION
56	PST-48	NW 183RD ST. STATION SITE PLAN
57	PST-49	NW 183RD ST. STATION PLAZA LEVEL PLAN
58	PST-50	NW 183RD ST. STATION PLATFORM PLAN
59	PST-51	NW 183RD ST. STATION REFLECTED CEILING PLAN
60	PST-52	NW 183RD ST. STATION ROOF PLAN
61	PST-53	NW 183RD ST. STATION 1-EAST ELEVATION
62	PST-54	NW 183RD ST. STATION 2-WEST ELEVATION
63	PST-55	NW 183RD ST. STATION ELEVATIONS
64	PST-56	NW 183RD ST. STATION ELEVATIONS
65	PST-57	NW 183RD ST. STATION A-CROSS SECTION
66	PST-58	NW 183RD ST. STATION B-LONGITUDINAL SECTION
67	PST-59	NW 199TH ST. STATION SITE PLAN
68	PST-60	NW 199TH ST. STATION PLAZA LEVEL PLAN
69	PST-61	NW 199TH ST. STATION PLATFORM LEVEL PLAN
70	PST-62	NW 199TH ST. STATION REFLECTED CEILING PLAN
71	PST-63	NW 199TH ST. STATION ROOF PLAN
72	PST-64	NW 199TH ST. STATION 1-EAST ELEVATION
73	PST-65	NW 199TH ST. STATION 2-WEST ELEVATION
74	PST-66	NW 199TH ST. STATION ELEVATIONS
75	PST-67	NW 199TH ST. STATION ELEVATIONS
76	PST-68	NW 199TH ST. STATION A-CROSS SECTION
77	PST-69	NW 199TH ST. STATION B-LONGITUDINAL SECTION
78	PST-70A	NW 215TH ST. STATION SITE PLAN
79	PST-70B	NW 215TH ST. STATION SITE PLAN-CONT'D
80	PST-71	NW 215TH ST. STATION PLAZA LEVEL PLAN
81	PST-72	NW 215TH ST. STATION MEZZANINE PLAN
82	PST-73	NW 215TH ST. STATION PLATFORM PLAN
83	PST-74	NW 215TH ST. STATION REFLECTED CEILING PLAN
84	PST-75	NW 215TH ST. STATION REFLECTED CEILING PLAN
85	PST-76	NW 215TH ST. STATION MEZZANINE ROOF PLAN
86	PST-77	NW 215TH ST. STATION ROOF PLAN
87	PST-78	NW 215TH ST. STATION 1-EAST ELEVATION
88	PST-79	NW 215TH ST. STATION 2-WEST ELEVATION
89	PST-80	NW 215TH ST. STATION 3- SOUTH ELEVATION
90	PST-81	NW 215TH ST. STATION ELEVATIONS
91	PST-82	NW 215TH ST. STATION A-CROSS SECTION
92	PST-83	NW 215TH ST. STATION B-CROSS SECTION
93	PST-84	NW 215TH ST. STATION B-LONGITUDINAL SECTION

SUBJECT TO CHANGE

KJ Designed by	5-06 Date					
KJ Drawn by	5-06 Date					
JE Checked by	5-06 Date					
Approved by	Date	No.	Date	By / Chk	App	Revisions

NORTH CORRIDOR METRORAIL EXTENSION - PRELIMINARY ENGINEERING (100% SUBMITTAL)

GENERAL

MIAMI-DADE COUNTY

MIAMI-DADE TRANSIT

PARSONS
7600 CORPORATE CENTER DRIVE, SUITE 500
MIAMI, FLORIDA 33126
PHONE: (786) 464-1000 FAX: (786) 845-7119
CERTIFICATE OF AUTHORIZATION NO. 1838

Approved	Date	Approved	Date

INDEX OF DRAWINGS

Scale	Drawing	Sheet
N.T.S.	GEN-03	3

05/16/2006 03:15:17 PM s:\mdt_north\index_sheets\gen-06.dgn

STATION-STRUCTURES

SHEET NO.	DWG NO.	SHEET DESCRIPTION
94	SSP-S1-01	NW 82ND STREET PLAZA LAYOUT PLAN
95	SSP-S1-02	NW 82ND STREET MEZZANINE LAYOUT PLAN
96	SSP-S1-03	NW 82ND STREET MEZZANINE ROOF PLAN
97	SSP-S1-04	NW 82ND STREET PLATFORM LAYOUT PLAN
98	SSP-S1-05	NW 82ND STREET ROOF LAYOUT PLAN
99	SSP-S1-06	NW 82ND STREET SECTION SHEET 1 OF 7
100	SSP-S1-07	NW 82ND STREET SECTION SHEET 2 OF 7
101	SSP-S1-08	NW 82ND STREET SECTION SHEET 3 OF 7
102	SSP-S1-09	NW 82ND STREET SECTION SHEET 4 OF 7
103	SSP-S1-10	NW 82ND STREET SECTION SHEET 5 OF 7
104	SSP-S1-11	NW 82ND STREET SECTION SHEET 6 OF 7
105	SSP-S1-12	NW 82ND STREET SECTION SHEET 7 OF 7
106	SSP-S2-01	NW 119TH STREET PLAZA LAYOUT
107	SSP-S2-02	NW 119TH STREET LOWER ROOF PLANS
108	SSP-S2-03	NW 119TH STREET PLATFORM LAYOUT AND CANOPY ROOF PLAN
109	SSP-S2-04	NW 119TH STREET SECTION SHEET 1 OF 3
110	SSP-S2-05	NW 119TH STREET SECTION SHEET 2 OF 3
111	SSP-S2-06	NW 119TH STREET SECTION SHEET 3 OF 3
112	SSP-S2-07	NW 119TH STREET ENTRANCE ROOF SHELL STRUCTURE DETAILS
113	SSP-S3-01	ALI BABA AVENUE PLAZA LAYOUT AND LOWER ROOF PLANS
114	SSP-S3-02	ALI BABA AVENUE PLATFORM LAYOUT AND CANOPY ROOF PLANS
115	SSP-S3-03	ALI BABA AVENUE SECTION SHEET 1 OF 3
116	SSP-S3-04	ALI BABA AVENUE SECTION SHEET 2 OF 3
117	SSP-S3-05	ALI BABA AVENUE SECTION SHEET 3 OF 3
118	SSP-S4-01	NW 163RD STREET PLAZA LAYOUT AND LOWER ROOF PLANS
119	SSP-S4-02	NW 163RD STREET PLAZA LAYOUT AND LOWER ROOF PLANS
120	SSP-S4-03	NW 163RD STREET SECTION SHEET 1 OF 3
121	SSP-S4-04	NW 163RD STREET SECTION SHEET 2 OF 3
122	SSP-S4-05	NW 163RD STREET SECTION SHEET 3 OF 3
123	SSP-S4-06	NW 163RD STREET ENTRANCE ROOF SHELL STRUCTURE DETAILS
124	SSP-S5-01	NW 183RD STREET PLAZA LAYOUT AND LOWER ROOF PLANS
125	SSP-S5-02	NW 183RD STREET PLATFORM LAYOUT AND CANOPY ROOF PLANS
126	SSP-S5-03	NW 183RD STREET SECTION SHEET 1 OF 3
127	SSP-S5-04	NW 183RD STREET SECTION SHEET 2 OF 3
128	SSP-S5-05	NW 183RD STREET SECTION SHEET 3 OF 3
129	SSP-S5-06	NW 183RD STREET ENTRANCE ROOF SHELL STRUCTURE DETAILS
130	SSP-S6-01	NW 199TH STREET PLAZA LAYOUT AND LOWER ROOF PLANS
131	SSP-S6-02	NW 199TH STREET PLATFORM LAYOUT AND CANOPY ROOF PLANS
132	SSP-S6-03	NW 199TH STREET SECTION SHEET 1 OF 3
133	SSP-S6-04	NW 199TH STREET SECTION SHEET 2 OF 3
134	SSP-S6-05	NW 199TH STREET SECTION SHEET 3 OF 3
135	SSP-S6-06	NW 199TH STREET ENTRANCE ROOF SHELL STRUCTURE DETAILS
136	SSP-S7-01	NW 215TH STREET PLAZA LAYOUT PLAN
137	SSP-S7-02	NW 215TH STREET MEZZANINE LAYOUT PLAN
138	SSP-S7-03	NW 215TH STREET PLATFORM LAYOUT AND CANOPY ROOF PLAN
139	SSP-S7-04	NW 215TH STREET SECTION SHEET 1 OF 3
140	SSP-S7-05	NW 215TH STREET SECTION SHEET 2 OF 3
141	SSP-S7-06	NW 215TH STREET SECTION SHEET 3 OF 3
142	SSP-S7-07	NW 215TH STREET PEDESTRIAN BRIDGE GENERAL ARRANGEMENT
143	SSP-S7-08	NW 215TH STREET PEDESTRIAN BRIDGE FOUNDATION DETAILS
144	SSP-S7-09	NW 215TH STREET PEDESTRIAN BRIDGE SECTIONS & NOTES

LANDSCAPE

SHEET NO.	DWG NO.	SHEET DESCRIPTION
145	TLSC-01	TRACKWAY LANDSCAPING
146	TLSC-02	TRACKWAY LANDSCAPING
147	TLSC-03	TRACKWAY LANDSCAPING
148	TLSC-04	TRACKWAY LANDSCAPING
149	TLSC-05	TRACKWAY LANDSCAPING
150	TLSC-06	TRACKWAY LANDSCAPING
151	TLSC-07	TRACKWAY LANDSCAPING
152	TLSC-08	TRACKWAY LANDSCAPING
153	TLSC-09	TRACKWAY LANDSCAPING
154	TLSC-10	TRACKWAY LANDSCAPING
155	TLSC-11	TRACKWAY LANDSCAPING
156	TLSC-12	TRACKWAY LANDSCAPING
157	TLSC-13	TRACKWAY LANDSCAPING
158	TLSC-14	TRACKWAY LANDSCAPING
159	TLSC-15	TRACKWAY LANDSCAPING
160	TLSC-16	TRACKWAY LANDSCAPING
161	TLSC-17	TRACKWAY LANDSCAPING
162	TLSC-18	TRACKWAY LANDSCAPING
163	TLSC-19	TRACKWAY LANDSCAPING AND DETAILS
164	SLSC8201	82ND STREET STATION LANDSCAPING
165	SLSC11901	119TH STREET STATION LANDSCAPING
166	SLSCALI01	143RD STREET (ALI-BABA) STATION LANDSCAPING
167	SLSC16301	163RD STREET STATION LANDSCAPING
168	SLSC16302	163RD STREET (CONT.) STATION LANDSCAPING
169	SLSC18301	183RD STREET STATION LANDSCAPING
170	SLSC19901	199TH STREET STATION LANDSCAPING
171	SLSC21501	215TH STREET STATION LANDSCAPING
172	SLSC21502	215TH STREET (CONT.) STATION LANDSCAPING

SUBJECT TO CHANGE

KJ Designed by 5-06 Date
KJ Drawn by 5-06 Date
JE Checked by 5-06 Date
Approved by Date

No.	Date	By / Chk.	App.	Revisions

NORTH CORRIDOR METRORAIL EXTENSION - PRELIMINARY ENGINEERING (100% SUBMITTAL)

MIAMI-DADE COUNTY

MIAMI-DADE TRANSIT

PARSONS
7600 CORPORATE CENTER DRIVE, SUITE 500
MIAMI, FLORIDA 33126
PHONE: (786) 464-1000 FAX: (786) 845-7119
CERTIFICATE OF AUTHORIZATION NO. 1838

Approved Date
Approved Date

GENERAL

INDEX OF DRAWINGS

Scale N.T.S. Drawing GEN-04 Sheet 4

05/16/2006 03:15:19 PM s:\mdt_north\index_sheets\gen-07.dgn

ELECTRICAL

SHEET NO.	DWG NO.	SHEET DESCRIPTION
173	EL-01	NW 82ND ST. STATION ELECTRICAL SITE PLAN
174	EL-02	NW 82ND ST. STATION ELECTRICAL PLAZA LEVEL PLAN
175	EL-03	NW 82ND ST. STATION ELECTRICAL MEZZANINE LEVEL PLAN
176	EL-04	NW 82ND ST. STATION ELECTRICAL PLATFORM LEVEL PLAN
177	EL-05	NW 82ND ST. STATION ELECTRICAL ROOF PLAN
178	EL-06	NW 119TH ST. STATION ELECTRICAL SITE PLAN
179	EL-07	NW 119TH ST. STATION ELECTRICAL PLAZA LEVEL PLAN
180	EL-08	NW 119TH ST. STATION ELECTRICAL PLATFORM PLAN
181	EL-09	NW 119TH ST. STATION ELECTRICAL REFLECTED CEILING PLAN
182	EL-10	NW 119TH ST. STATION ELECTRICAL ROOF PLAN
183	EL-11	NW ALI BABA AVE. STATION ELECTRICAL SITE PLAN
184	EL-12	NW ALI BABA AVE. STATION ELECTRICAL PLAZA LEVEL PLAN
185	EL-13	NW ALI BABA AVE. STATION ELECTRICAL PLATFORM LEVEL PLAN
186	EL-14	NW ALI BABA AVE. STATION ELECTRICAL REFLECTED CEILING PLAN
187	EL-15	NW ALI BABA AVE. STATION ELECTRICAL ROOF PLAN
188	EL-16	NW 163RD STREET STATION ELECTRICAL SITE PLAN
189	EL-17	NW 163RD STREET STATION ELECTRICAL SITE PLAN -CONT'D
190	EL-18	NW 163RD STREET STATION ELECTRICAL PLAZA LEVEL PLAN
191	EL-19	NW 163RD STREET STATION ELECTRICAL PLATFORM LEVEL PLAN
192	EL-20	NW 163RD STREET STATION ELECTRICAL REFLECTED CEILING PLAN
193	EL-21	NW 163RD STREET STATION ELECTRICAL ROOF LEVEL PLAN
194	EL-22	NW 183RD ST. STATION ELECTRICAL SITE PLAN
195	EL-23	NW 183RD ST. STATION ELECTRICAL PLAZA LEVEL PLAN
196	EL-24	NW 183RD ST. STATION ELECTRICAL PLATFORM PLAN
197	EL-25	NW 183RD ST. STATION ELECTRICAL REFLECTED CEILING PLAN
198	EL-26	NW 183RD ST. STATION ELECTRICAL ROOF PLAN
199	EL-27	NW 199TH STREET STATION ELECTRICAL SITE PLAN
200	EL-28	NW 199TH STREET STATION ELECTRICAL PLAZA LEVEL PLAN
201	EL-29	NW 199TH STREET STATION ELECTRICAL PLATFORM LEVEL PLAN
202	EL-30	NW 199TH STREET STATION ELECTRICAL REFLECTED CEILING PLAN
203	EL-31	NW 199TH STREET STATION ELECTRICAL ROOF PLAN
204	EL-32	NW 215TH ST. STATION ELECTRICAL SITE PLAN
205	EL-33	NW 215TH ST. STATION ELECTRICAL SITE PLAN - CONT'D
206	EL-34	NW 215TH ST. STATION ELECTRICAL PLAZA LEVEL PLAN
207	EL-35	NW 215TH ST. STATION ELECTRICAL MEZZANINE FLOOR PLAN
208	EL-36	NW 215TH ST. STATION ELECTRICAL MEZZANINE REFLECTED CEILING PLAN
209	EL-37	NW 215TH ST. STATION ELECTRICAL PLATFORM PLAN
210	EL-38	NW 215TH ST. STATION ELECTRICAL PLATFORM REFLECTED CEILING PLAN
211	EL-39	NW 215TH ST. STATION ELECTRICAL MEZZANINE ROOF PLAN
212	EL-40	NW 215TH ST. STATION ELECTRICAL ROOF PLAN

MECHANICAL

SHEET NO.	DWG NO.	SHEET DESCRIPTION
213	ME-01	NW 82ND ST. STATION MECHANICAL SITE PLAN
214	ME-02	NW 82ND ST. STATION MECHANICAL PLAZA LEVEL PLAN
215	ME-03	NW 82ND ST. STATION MECHANICAL MEZZANINE LEVEL PLAN
216	ME-04	NW 82ND ST. STATION MECHANICAL PLATFORM LEVEL PLAN
217	ME-05	NW 82ND ST. STATION MECHANICAL ROOF PLAN
218	ME-06	NW 119TH ST. STATION MECHANICAL SITE PLAN
219	ME-07	NW 119TH ST. STATION MECHANICAL PLAZA LEVEL PLAN
220	ME-08	NW 119TH ST. STATION MECHANICAL PLATFORM PLAN
221	ME-09	NW 119TH ST. STATION MECHANICAL ROOF PLAN
222	ME-10	NW ALI BABA AVE. STATION MECHANICAL SITE PLAN
223	ME-11	NW ALI BABA AVE. STATION MECHANICAL PLAZA LEVEL PLAN
224	ME-12	NW ALI BABA AVE. STATION MECHANICAL PLATFORM PLAN
225	ME-13	NW ALI BABA AVE. STATION MECHANICAL ROOF PLAN
226	ME-14	NW 163RD STREET STATION MECHANICAL SITE PLAN
227	ME-15	NW 163RD STREET STATION MECHANICAL SITE PLAN -CONT'D
228	ME-16	NW 163RD STREET STATION MECHANICAL PLAZA LEVEL PLAN
229	ME-17	NW 163RD STREET STATION MECHANICAL PLATFORM LEVEL PLAN
230	ME-18	NW 163RD STREET STATION MECHANICAL ROOF LEVEL PLAN
231	ME-19	NW 183RD ST. STATION MECHANICAL SITE PLAN
232	ME-20	NW 183RD ST. STATION MECHANICAL PLAZA LEVEL PLAN
233	ME-21	NW 183RD ST. STATION MECHANICAL PLATFORM LEVEL PLAN
234	ME-22	NW 183RD ST. STATION MECHANICAL ROOF PLAN
235	ME-23	NW 199TH STREET STATION MECHANICAL SITE PLAN

SUBJECT TO CHANGE

KJ Designed by 5-06 Date
KJ Drawn by 5-06 Date
JE Checked by 5-06 Date
Approved by Date

No.	Date	By Chk	App.	Revisions

NORTH CORRIDOR METRORAIL EXTENSION - PRELIMINARY ENGINEERING (100% SUBMITTAL)

MIAMI-DADE COUNTY

MIAMI-DADE TRANSIT

PARSONS
7600 CORPORATE CENTER DRIVE, SUITE 500
MIAMI, FLORIDA 33126
PHONE: (786) 464-1000 FAX: (786) 845-7119
CERTIFICATE OF AUTHORIZATION NO. 1636

Approved Date
Approved Date

GENERAL

INDEX OF DRAWINGS

Scale N.T.S. | Drawing GEN-05 | Sheet 5

05/16/2006 03:15:21 PM s:\mdt_north\index_sheets\gen-05.dgn

MECHANICAL (CONT.)

SHEET NO.	DWG NO.	SHEET DESCRIPTION
236	ME-24	NW 199TH STREET STATION MECHANICAL PLAZA LEVEL PLAN
237	ME-25	NW 199TH STREET STATION MECHANICAL PLATFORM LEVEL PLAN
238	ME-26	NW 199TH STREET STATION MECHANICAL ROOF PLAN
239	ME-27	NW 215TH ST. STATION MECHANICAL SITE PLAN
240	ME-28	NW 215TH ST. STATION MECHANICAL SITE PLAN - CONT'D
241	ME-29	NW 215TH ST. STATION MECHANICAL PLAZA LEVEL PLAN
242	ME-30	NW 215TH ST. STATION MECHANICAL MEZZANINE FLOOR PLAN
243	ME-31	NW 215TH ST. STATION MECHANICAL PLATFORM PLAN
244	ME-32	NW 215TH ST. STATION MECHANICAL MEZZANINE ROOF PLAN
245	ME-33	NW 215TH ST. STATION MECHANICAL ROOF PLAN

PLUMBING

SHEET NO.	DWG NO.	SHEET DESCRIPTION
246	PL-01	NW 82ND ST. STATION PLUMBING SITE PLAN
247	PL-02	NW 82ND ST. STATION PLUMBING PLAZA LEVEL PLAN
248	PL-03	NW 82ND ST. STATION PLUMBING MEZZANINE LEVEL PLAN
249	PL-04	NW 82ND ST. STATION PLUMBING PLATFORM LEVEL PLAN
250	PL-05	NW 82ND ST. STATION PLUMBING ROOF PLAN
251	PL-06	NW 119TH ST. STATION PLUMBING SITE PLAN
252	PL-07	NW 119TH ST. STATION PLUMBING PLAZA LEVEL PLAN
253	PL-08	NW 119TH ST. STATION PLUMBING PLATFORM PLAN
254	PL-09	NW 119TH ST. STATION PLUMBING ROOF PLAN
255	PL-10	NW ALI BABA AVE. STATION PLUMBING SITE PLAN
256	PL-11	NW ALI BABA AVE. STATION PLUMBING PLAZA LEVEL PLAN
257	PL-12	NW ALI BABA AVE. STATION PLUMBING PLATFORM PLAN
258	PL-13	NW ALI BABA AVE. STATION PLUMBING ROOF PLAN
259	PL-14	NW 163RD STREET STATION PLUMBING SITE PLAN
260	PL-15	NW 163RD STREET STATION PLUMBING SITE PLAN -CONT'D
261	PL-16	NW 163RD STREET STATION PLUMBING PLAZA LEVEL PLAN
262	PL-17	NW 163RD STREET STATION PLUMBING PLATFORM LEVEL PLAN
263	PL-18	NW 163RD STREET STATION PLUMBING ROOF LEVEL PLAN
264	PL-19	NW 183RD ST. STATION PLUMBING SITE PLAN
265	PL-20	NW 183RD ST. STATIONPLUMBING PLAZA LEVEL PLAN
266	PL-21	NW 183RD ST. STATION PLUMBING PLATFORM LEVEL PLAN
267	PL-22	NW 183RD ST. STATION PLUMBING ROOF PLAN
268	PL-23	NW 199TH STREET STATION PLUMBING SITE PLAN
269	PL-24	NW 199TH STREET STATION PLUMBING PLAZA LEVEL PLAN
270	PL-25	NW 199TH STREET STATION PLUMBING PLATFORM LEVEL PLAN
271	PL-26	NW 199TH STREET STATION PLUMBING ROOF PLAN
272	PL-27	NW 215TH ST. STATION PLUMBING SITE PLAN
273	PL-28	NW 215TH ST. STATION PLUMBING SITE PLAN - CONT'D
274	PL-29	NW 215TH ST. STATION PLUMBING PLAZA LEVEL PLAN
275	PL-30	NW 215TH ST. STATION PLUMBING MEZZANINE FLOOR PLAN
276	PL-31	NW 215TH ST. STATION PLUMBING PLATFORM PLAN
277	PL-32	NW 215TH ST. STATION PLUMBING MEZZANINE ROOF PLAN
278	PL-33	NW 215TH ST. STATION PLUMBING ROOF PLAN

FIRE PROTECTION

SHEET NO.	DWG NO.	SHEET DESCRIPTION
279	FP-01	NW 82ND ST. STATION FIRE PROTECTION SITE PLAN
280	FP-02	NW 82ND ST. STATION FIRE PROTECTION PLAZA LEVEL PLAN
281	FP-03	NW 82ND ST. STATION FIRE PROTECTION MEZZANINE LEVEL PLAN
282	FP-04	NW 82ND ST. STATION FIRE PROTECTION PLATFORM LEVEL PLAN
283	FP-05	NW 82ND ST. STATION FIRE PROTECTION ROOF PLAN
284	FP-06	NW 119TH ST. STATION FIRE PROTECTION SITE PLAN
285	FP-07	NW 119TH ST. STATION FIRE PROTECTION PLAZA LEVEL PLAN
286	FP-08	NW 119TH ST. STATION FIRE PROTECTION PLATFORM PLAN
287	FP-09	NW 119TH ST. STATION FIRE PROTECTION ROOF PLAN
288	FP-10	NW ALI BABA AVE. STATION FIRE PROTECTION SITE PLAN
289	FP-11	NW ALI BABA AVE. STATION FIRE PROTECTION PLAZA LEVEL PLAN
290	FP-12	NW ALI BABA AVE. STATION FIRE PROTECTION PLATFORM LEVEL PLAN
291	FP-13	NW ALI BABA AVE. STATION FIRE PROTECTION ROOF PLAN
292	FP-14	NW 163RD STREET STATION FIRE PROTECTION SITE PLAN
293	FP-15	NW 163RD STREET STATION FIRE PROTECTION SITE PLAN -CONT'D
294	FP-16	NW 163RD STREET STATION FIRE PROTECTION PLAZA LEVEL PLAN
295	FP-17	NW 163RD STREET STATION FIRE PROTECTION PLATFORM LEVEL PLAN
296	FP-18	NW 163RD STREET STATION FIRE PROTECTION ROOF LEVEL PLAN
297	FP-19	NW 183RD ST. STATION FIRE PROTECTION SITE PLAN
298	FP-20	NW 183RD ST. STATION FIRE PROTECTION PLAZA LEVEL PLAN
299	FP-21	NW 183RD ST. STATION FIRE PROTECTION PLATFORM LEVEL PLAN
300	FP-22	NW 183RD ST. STATION FIRE PROTECTION ROOF PLAN
301	FP-23	NW 199TH STREET STATION FIRE PROTECTION SITE PLAN
302	FP-24	NW 199TH STREET STATION FIRE PROTECTION PLAZA LEVEL PLAN
303	FP-25	NW 199TH STREET STATION FIRE PROTECTION PLATFORM LEVEL PLAN
304	FP-26	NW 199TH STREET STATION FIRE PROTECTION ROOF PLAN
305	FP-27	NW 215TH ST. STATION FIRE PROTECTION SITE PLAN
306	FP-28	NW 215TH ST. STATION FIRE PROTECTION SITE PLAN - CONT'D
307	FP-29	NW 215TH ST. STATION FIRE PROTECTION PLAZA LEVEL PLAN
308	FP-30	NW 215TH ST. STATION FIRE PROTECTION MEZZANINE FLOOR PLAN
309	FP-31	NW 215TH ST. STATION FIRE PROTECTION PLATFORM PLAN
310	FP-32	NW 215TH ST. STATION FIRE PROTECTION MEZZANINE ROOF PLAN
311	FP-33	NW 215TH ST. STATION FIRE PROTECTION ROOF PLAN

SYSTEMS-COMMUNICATION

SHEET NO.	DWG NO.	SHEET DESCRIPTION
312	SCM-103	COMMUNICATION SYMBOLS AND NOMENKLATURE
313	SCM-104	TYPICAL COMMUNICATIONS ROOM PASSENGER STATION BLOCK DIAGRAM
314	SCM-106	FIBER OPTIC CABLE PLANT
315	SCM-107	SONET SINGLE LINE DIAGRAM
316	SCM-108	NETWORK LAYOUT
317	SCM-109	TYPICAL TRAIN CONTROL / COMMUNICATIONS EQUIPMENT LAYOUT
318	SCM-110	FUNCTIONAL BLOCK DIAGRAM TRAIN CONTROL/ COMMUNICATION INTERFACE
319	SCM-111	TYPICAL COMMUNICATIONS ROOM/TPSS INTERFACES
320	SCM-131	NW 82ND ST. STATION CCTV, F&I DEVICE LOCATIONS SITE PLAN
321	SCM-132	NW 82ND ST. STATION CCTV, F&I DEVICE LOCATIONS PLAZA LEVEL PLAN
322	SCM-133	NW 82ND ST. STATION CCTV, F&I DEVICE LOCATIONS MEZZANINE LEVEL PLAN

SUBJECT TO CHANGE

KJ Designed by	5-06 Date					NORTH CORRIDOR METRORAIL EXTENSION - PRELIMINARY ENGINEERING (100% SUBMITTAL)	GENERAL
KJ Drawn by	5-06 Date					MIAMI-DADE COUNTY / MIAMI-DADE TRANSIT	INDEX OF DRAWINGS
JE Checked by	5-06 Date					PARSONS 7600 CORPORATE CENTER DRIVE, SUITE 500 MIAMI, FLORIDA 33126 PHONE: (786) 464-1000 FAX: (786) 845-7119 CERTIFICATE OF AUTHORIZATION NO. 1836	
Approved by	Date	No.	Date	By / Chk.	App.	Revisions	Approved / Date / Approved / Date / Scale N.T.S. / Drawing GEN-06 / Sheet 6

05/16/2006 03:15:22 PM s:\mdt_north\index_sheets\gen-09a.dgn

SYSTEMS-COMMUNICATION (CONT.)

SHEET NO.	DWG NO.	SHEET DESCRIPTION
323	SCM-134	NW 82ND ST. STATION CCTV, F&I DEVICE LOCATIONS PLATFORM LEVEL PLAN
324	SCM-135	NW 82ND ST. STATION PHONE AND BLS LOCATIONS SITE PLAN
325	SCM-136	NW 82ND ST. STATION PHONE AND BLS LOCATIONS PLAZA LEVEL PLAN
326	SCM-137	NW 82ND ST. STATION PHONE AND BLS LOCATIONS MEZZANINE LEVEL PLAN
327	SCM-138	NW 82ND ST. STATION PHONE AND BLS LOCATIONS PLATFORM LEVEL PLAN
328	SCM-139	NW 82ND ST. STATION SPEAKER AND SIGNAGE LOCATIONS PLAZA LEVEL PLAN
329	SCM-140	NW 82ND ST. STATION SPEAKER AND SIGNAGE LOCATIONS MEZZANINE LEVEL PLAN
330	SCM-141	NW 82ND ST. STATION SPEAKER AND SIGNAGE LOCATIONS PLATFORM LEVEL PLAN
331	SCM-151	NW 183RD ST. STATION CCTV, F&I DEVICE LOCATIONS SITE PLAN
332	SCM-152	NW 183RD ST. STATION CCTV, F&I DEVICE LOCATIONS PLAZA LEVEL PLAN
333	SCM-153	NW 183RD ST. STATION CCTV, F&I DEVICE LOCATIONS PLATFORM LEVEL PLAN
334	SCM-155	NW 183RD ST. STATION PHONE AND BLS LOCATIONS PLAZA LEVEL PLAN
335	SCM-156	NW 183RD ST. STATION PHONE AND BLS LOCATIONS PLAZA LEVEL PLAN
336	SCM-157	NW 183RD ST. STATION SPEAKER AND SIGNAGE LOCATIONS PLAZA LEVEL PLAN
337	SCM-158	NW 183RD ST. STATION SPEAKER AND SIGNAGE LOCATIONS PLATFORM PLAN

TRACTION POWER

SHEET NO.	DWG NO.	SHEET DESCRIPTION
338	TPW-103	LEGENDS, SYMBOLS, & ABBREVIATIONS(1 OF 2)
339	TPW-104	LEGENDS, SYMBOLS, & ABBREVIATIONS(2 OF 2)
340	TPW-105	SUBSTATION LOCATION MAP
341	TPW-106	ELECTRICAL SECTIONING DIAGRAM-STA. 75+00 TO STA. 172+00
342	TPW-107	ELECTRICAL SECTIONING DIAGRAM-STA. 172+00 TO STA. 260+00
343	TPW-108	ELECTRICAL SECTIONING DIAGRAM-STA. 260+00 TO STA. 355+00
344	TPW-109	ELECTRICAL SECTIONING DIAGRAM-STA. 355+50 TO STA. 450+00
345	TPW-110	ELECTRICAL SECTIONING DIAGRAM-STA. 450+00 TO STA. 540+00
346	TPW-111	ELECTRICAL SECTIONING DIAGRAM-STA. 540+00 TO STA. 581+14
347	TPW-120	TYPICAL TRACTION POWER SUBSTATION METERING & RELAY SINGLE LINE DIAGRAM (1OF 2)
348	TPW-121	TYPICAL TRACTION POWER SUBSTATION METERING & RELAY SINGLE LINE DIAGRAM (2OF 2)
349	TPW-125	TYPICAL GAP-TIE STATION METERING & RELAY SINGLE LINE DIAGRAM
350	TPW-130	TYPICAL TP SUBSTATION EQUIPMENT LAYOUT
351	TPW-135	TYPICAL GAP-TIE STATION EQUIPMENT LAYOUT

TRAIN CONTROL

SHEET NO.	DWG NO.	SHEET DESCRIPTION
352	SY-102	LEGENDS, SYMBOLS, & ABBREVIATIONS
353	SY-103	EXAMPLE VEHICLE SAFE BRAKING MODEL
354	SY-104	EXAMPLE INTERLOCKING TRAIN CONTROL ROOM FUNCTIONAL BLOCK DIAGRAM
355	SY-105	SINGLE LINE TRACK SCHEMATIC STA. 447+00- 118+00
356	SY-106	SINGLE LINE TRACK SCHEMATIC STA. 118+00- 178+00
357	SY-107	SINGLE LINE TRACK SCHEMATIC STA. 178+00- 238+00
358	SY-108	SINGLE LINE TRACK SCHEMATIC STA. 238+00- 298+00
359	SY-109	SINGLE LINE TRACK SCHEMATIC STA. 298+00- 347+00
360	SY-110	SINGLE LINE TRACK SCHEMATIC STA. 347+00- 407+00
361	SY-111	SINGLE LINE TRACK SCHEMATIC STA. 407+00- 467+00
362	SY-112	SINGLE LINE TRACK SCHEMATIC STA. 467+00- 526+00
363	SY-113	SINGLE LINE TRACK SCHEMATIC STA. 526+00- 586+00
364	SY-114	EXAMPLE TRAIN CONTROL AND COMMUNICATION EQUIPMENT ROOM LAYOUT

CORROSION CONTROL

SHEET NO.	DWG NO.	SHEET DESCRIPTION
365	CC-102	GUIDEWAY STRAY CURRENT CONTROL DETAILS-1
366	CC-103	GUIDEWAY STRAY CURRENT CONTROL DETAILS-2
367	CC-104	TEST STATION DETAILS

SUBJECT TO CHANGE

KJ Designed by 5-06 Date						NORTH CORRIDOR METRORAIL EXTENSION - PRELIMINARY ENGINEERING (100% SUBMITTAL)
KJ Drawn by 5-06 Date						MIAMI-DADE COUNTY / MIAMI-DADE TRANSIT
JE Checked by 5-06 Date						PARSONS 7600 CORPORATE CENTER DRIVE, SUITE 500 MIAMI, FLORIDA 33126 PHONE: (786) 464-1000 FAX: (786) 845-7119 CERTIFICATE OF AUTHORIZATION NO 1838
Approved by Date	No.	Date	By / Chk	App.	Revisions	Approved / Date / Approved / Date

GENERAL

INDEX OF DRAWINGS

Scale N.T.S. | Drawing GEN-07 | Sheet 7

05/16/2006 06:24:44 PM s:\MDT_North\Index_sheets\GEN-09.dgn

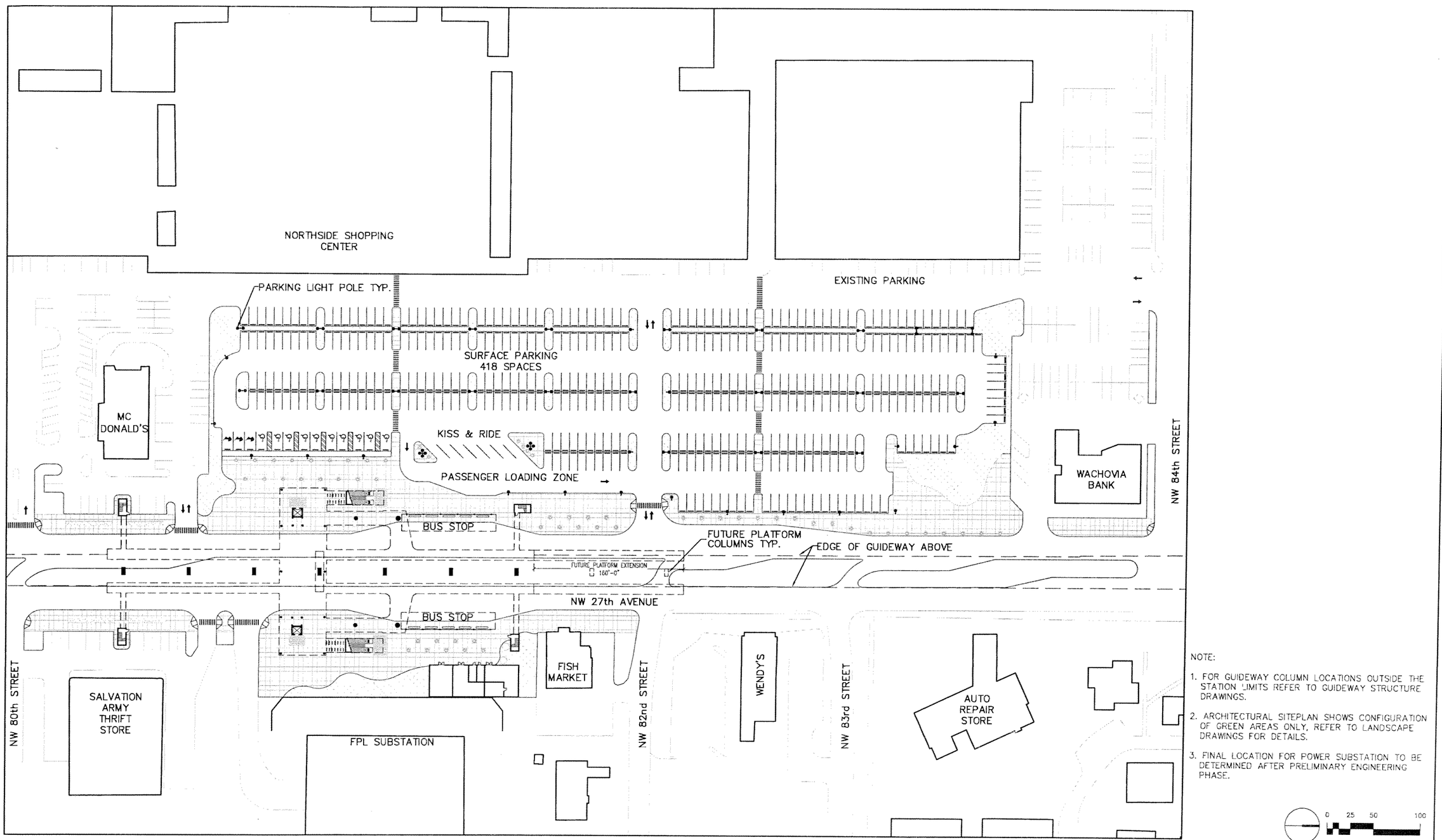

NOTE:

1. FOR GUIDEWAY COLUMN LOCATIONS OUTSIDE THE STATION LIMITS REFER TO GUIDEWAY STRUCTURE DRAWINGS.
2. ARCHITECTURAL SITEPLAN SHOWS CONFIGURATION OF GREEN AREAS ONLY, REFER TO LANDSCAPE DRAWINGS FOR DETAILS.
3. FINAL LOCATION FOR POWER SUBSTATION TO BE DETERMINED AFTER PRELIMINARY ENGINEERING PHASE.

0 25 50 100

SUBJECT TO CHANGE

Designed by ML	5/06	1	9/22/05		60% PROGRESS SET
Drawn by HC	5/06	2	10/17/05		70% PROGRESS SET
Checked by ML	5/06	3	3/10/06		90% REVISED PROGRESS SET
Approved by	Date	4	5/22/06		100% SUBMITTAL
		No.	Date	By / Chk App.	Revisions

NORTH CORRIDOR METRORAIL EXTENSION - PRELIMINARY ENGINEERING (100% SUBMITTAL)

MIAMI-DADE COUNTY

MIAMI-DADE TRANSIT

PARSONS
7600 CORPORATE CENTER DRIVE, SUITE 500
MIAMI, FLORIDA 33126
PHONE: (786) 464-1000 FAX: (786) 845-7119
CERTIFICATE OF AUTHORIZATION NO. 1838

Approved | Date

EARTHTECH
Transportation Services
architecture · engineering · construction
3190 NW 87th Avenue, Suite 300
Miami, Florida 33172-2430
CERTIFICATE OF AUTHORIZATION NO. 8115
REGISTRATION # AA26000697

Approved | Date 05-22-06

DATE TIME FILE

PASSENGER STATIONS

NW 82ND ST. STATION SITE PLAN

Scale 1" = 100' | Drawing PST-01 | Sheet 8

MC DONALD'S

RAMP

KISS & RIDE

TREE GRATES TYP.

PASSENGER LOADING ZONE

STATION DEFINING FLOOR PATTERN TYP.

EXIT STAIR TYP.

BICYCLE RACKS TYP.

BUS STOP

CURB RAMP TYP.

CROSSWALK TYP.

CONCRETE SIDEWALK TYP.

STATION SUPPORT COLUMN TYP.

MEZZANINE ABOVE

STATION PLATFORM ABOVE

NW 27th AVENUE

MEZZANINE SUPPORT COLUMN TYP.

BUS STOP

BENCHES TYP.

EMERGENCY STAIRWAY TYP.

STATION ENTRANCE CANOPY TYP.

FISH MARKET

ELECTRICAL

MECHANICAL

TRASH

MAINT.

TRAIN CONTROL & COMM. RM.

BATTERY RM

SALVATION ARMY THRIFT STORE

FPL SUBSTATION

EXISTING FPL SUBSTATION WALL

0 10 20 40

SUBJECT TO CHANGE

No.	Date	By / Chk	App.	Revisions
1	9/02/06			60% PROGRESS SET
2	10/17/06			70% PROGRESS SET
3	3/19/06			90% REVISED PROGRESS SET
4	5/22/06			100% SUBMITTAL

Designed by ML 5/06 Date

Drawn by HC 5/06 Date

Checked by ML 5/06 Date

Approved by Date

NORTH CORRIDOR METRORAIL EXTENSION - PRELIMINARY ENGINEERING (100% SUBMITTAL)

MIAMI-DADE COUNTY

MIAMI-DADE TRANSIT

PARSONS
7600 CORPORATE CENTER DRIVE, SUITE 500
MIAMI, FLORIDA 33126
PHONE: (786) 464-1000 FAX: (786) 845-7118
CERTIFICATE OF AUTHORIZATION NO. 1836

Approved Date

EARTHTECH
Transportation Services
architecture · engineering · construction
3750 NW 87th Avenue, Suite 300
Miami, Florida 33178-2030
CERTIFICATE OF AUTHORIZATION NO. 8115
REGISTRATION # AA26000697

Approved Date 05-22-06

DATE TIME FILE

PASSENGER STATIONS

NW 82ND ST. STATION PLAZA LEVEL PLAN

Scale 1" = 40' Drawing PST-02 Sheet

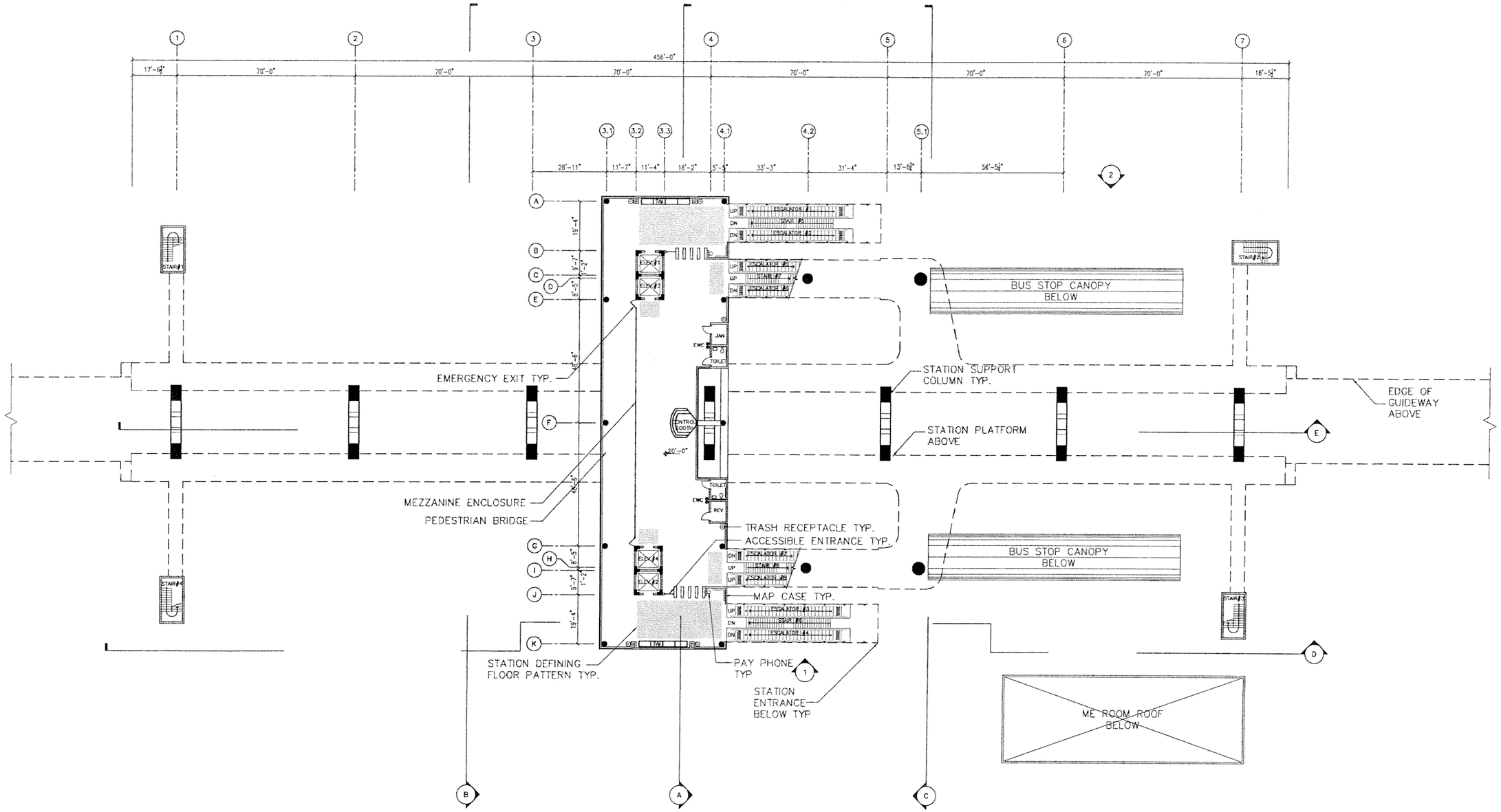

SUBJECT TO CHANGE

Designed by ML 5/06	No.	Date	By / Chk	App.	Revisions
Drawn by HC 5/06	1	9/02/05			60% PROGRESS SET
Checked by ML 5/06	2	10/17/05			70% PROGRESS SET
Approved by Date	3	3/10/06			90% REVISED PROGRESS SET
	4	5/22/06			100% SUBMITTAL

NORTH CORRIDOR METRORAIL EXTENSION - PRELIMINARY ENGINEERING (100% SUBMITTAL)

MIAMI-DADE COUNTY — MIAMI-DADE TRANSIT

PARSONS
7600 CORPORATE CENTER DRIVE, SUITE 500
MIAMI, FLORIDA 33126
PHONE: (786) 464-1000 FAX: (786) 845-7119
CERTIFICATE OF AUTHORIZATION NO. 1838

Approved ____ Date ____

EARTHTECH
Transportation Services
architecture · engineering · construction
3756 NW 87th Avenue, Suite 300
Miami, Florida 33178-2430
CERTIFICATE OF AUTHORIZATION NO. 9115
REGISTRATION # AA0003687

Approved ____ Date 05-22-06

DATE TIME FILE

PASSENGER STATIONS

NW 82ND ST. STATION MEZZANINE LEVEL PLAN

Scale 1" = 40' Drawing PST-03 Sheet 10

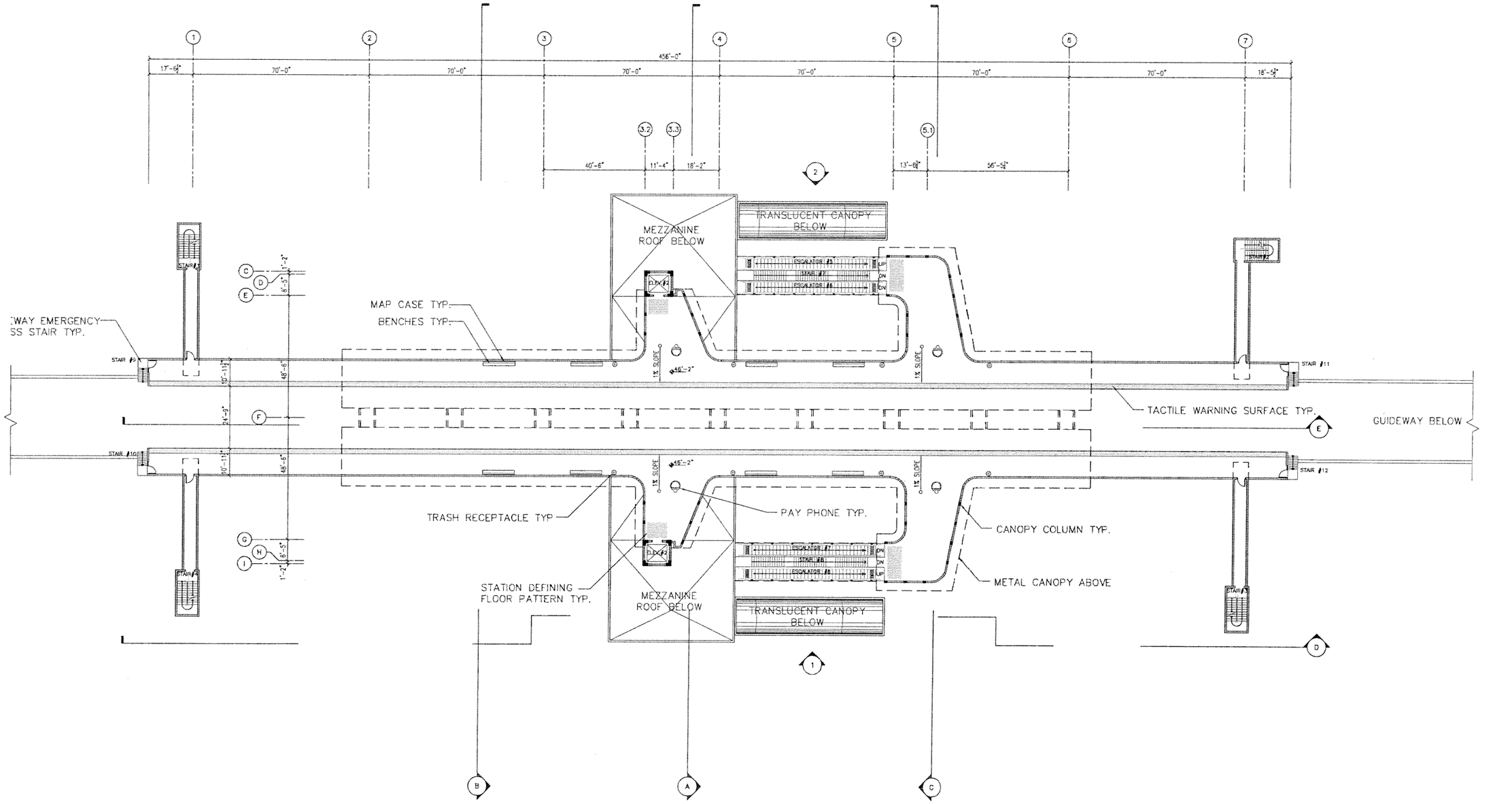

0 10 20 40

SUBJECT TO CHANGE

Designed by ML	Date 5/06
Drawn by HC	Date 5/06
Checked by ML	Date 5/06
Approved by	Date

No.	Date	By	Chk	App.	Revisions
1	6/02/05				60% PROGRESS SET
2	10/17/05				70% PROGRESS SET
3	3/10/06				90% REVISED PROGRESS SET
4	5/22/06				100% SUBMITTAL

NORTH CORRIDOR METRORAIL EXTENSION - PRELIMINARY ENGINEERING (100% SUBMITTAL)

MIAMI-DADE COUNTY

MIAMI-DADE TRANSIT

PARSONS
7600 CORPORATE CENTER DRIVE, SUITE 500
MIAMI, FLORIDA 33126
PHONE: (786) 464-1000 FAX: (786) 645-7119
CERTIFICATE OF AUTHORIZATION NO. 1838

EARTHTECH
Transportation Services
architecture · engineering · construction
3750 NW 87th Avenue, Suite 300
Miami, Florida 33178-2430
CERTIFICATE OF AUTHORIZATION NO. 8115
REGISTRATION # AA26000667

Approved	Date	Approved	Date 05-22-06
			DATE TIME FILE

PASSENGER STATIONS

NW 82ND ST. STATION PLATFORM LEVEL PLAN

Scale 1" = 40' | Drawing PST-04 | Sheet 11

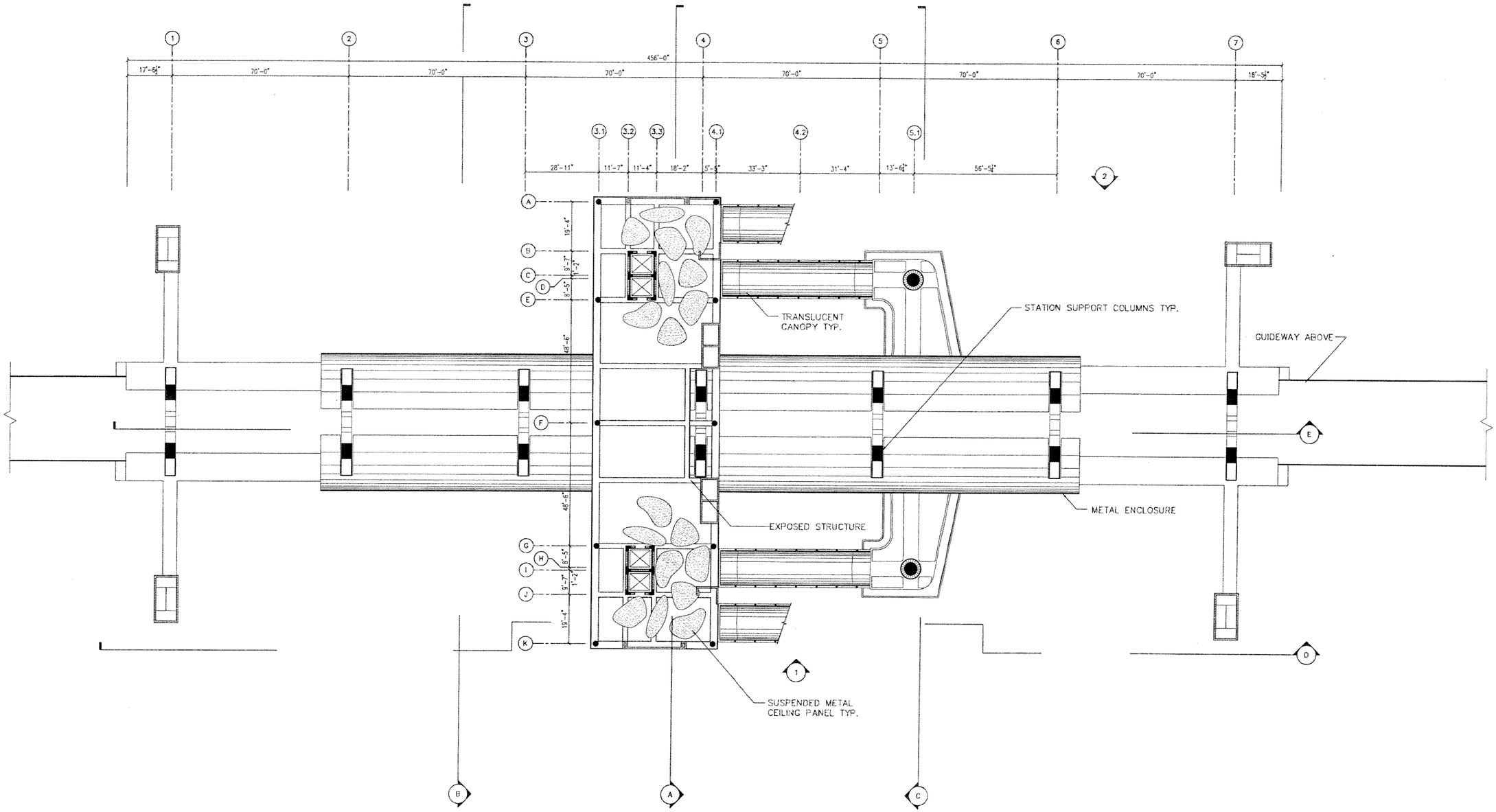

0 10 20 40

SUBJECT TO CHANGE

Designed by ML 5/06	1	5/02/05			60% PROGRESS SET
Drawn by HC 5/06	2	10/17/05			70% PROGRESS SET
Checked by ML 5/06	3	3/10/06			90% REVISED PROGRESS SET
	4	5/22/06			100% SUBMITTAL
Approved by Date	No.	Date	By / Chk	App.	Revisions

NORTH CORRIDOR METRORAIL EXTENSION - PRELIMINARY ENGINEERING (100% SUBMITTAL)

MIAMI-DADE COUNTY

MIAMI-DADE TRANSIT

PARSONS
7600 CORPORATE CENTER DRIVE, SUITE 500
MIAMI, FLORIDA 33126
PHONE: (786) 464-1000 FAX: (786) 845-7119
CERTIFICATE OF AUTHORIZATION NO. 1638

EARTH TECH
Transportation Services
architecture · engineering · construction
3760 NW 87th Avenue, Suite 300
Miami, Florida 33178-2432
CERTIFICATE OF AUTHORIZATION NO. 8115
REGISTRATION # AA26000697

Approved | Date | Approved | Date 05-22-06

DATE TIME FILE

PASSENGER STATIONS

NW 82ND ST. STATION REFLECTED CEILING PLAN

Scale 1" = 40' | Drawing PST-05 | Sheet 12

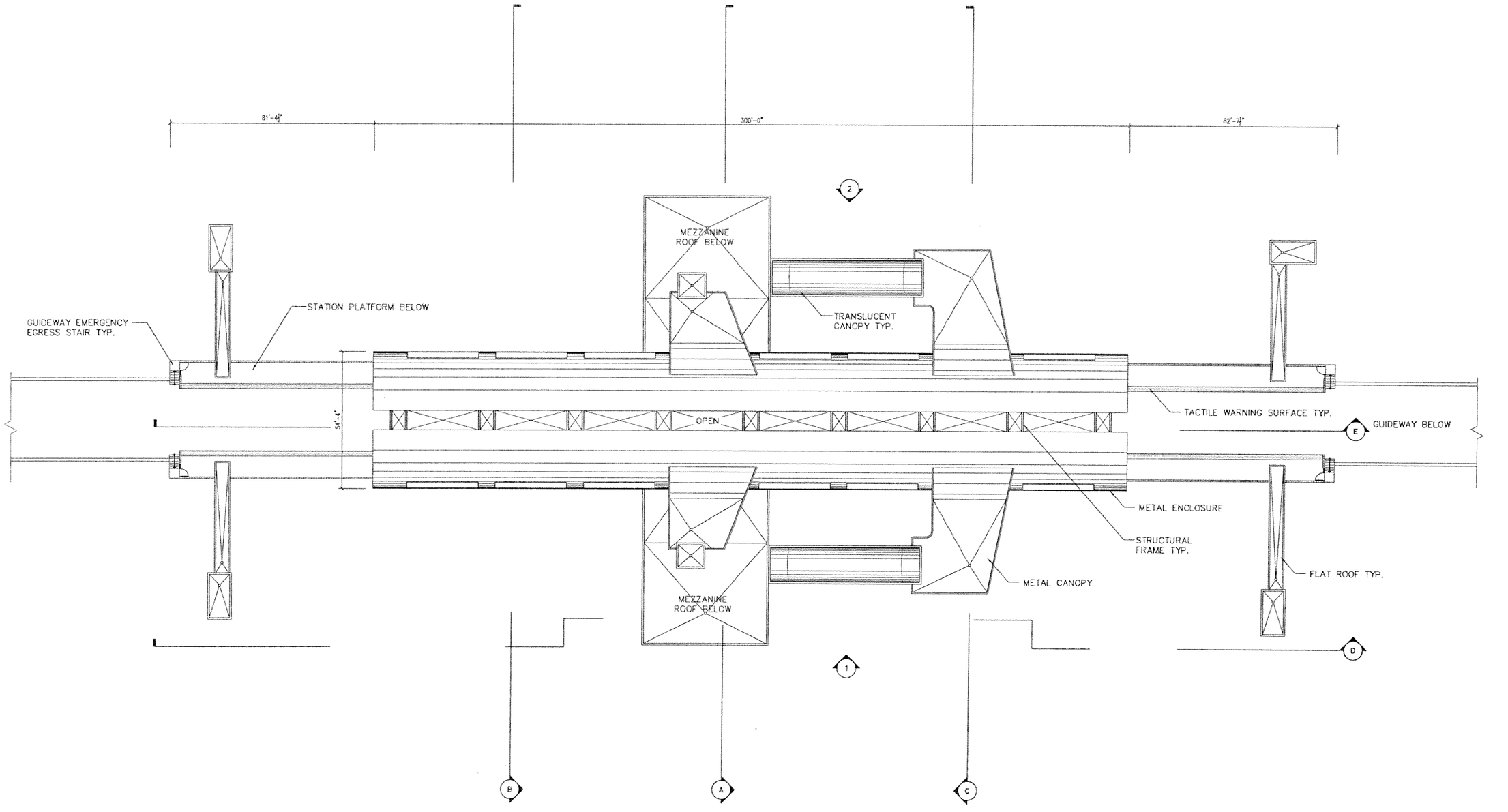

0 10 20 40

SUBJECT TO CHANGE

1	9/02/05				60% PROGRESS SET
2	10/17/05				70% PROGRESS SET
3	3/10/06				90% REVISED PROGRESS SET
4	5/22/06				100% SUBMITTAL

Designed by ML 5/06 Date
Drawn by HC 5/06 Date
Checked by ML 5/06 Date
Approved by Date

No. Date By / Chk App. Revisions

NORTH CORRIDOR METRORAIL EXTENSION - PRELIMINARY ENGINEERING (100% SUBMITTAL)

MIAMI-DADE COUNTY

MIAMI-DADE TRANSIT

PARSONS
7600 CORPORATE CENTER DRIVE, SUITE 500
MIAMI, FLORIDA 33126
PHONE: (786) 464-1000 FAX: (786) 845-7119
CERTIFICATE OF AUTHORIZATION NO. 1836

Approved Date

EARTHTECH
Transportation Services
architecture · engineering · construction
3136 NW 97th. Avenue, Suite 300
Miami, Florida 33178-2490
CERTIFICATE OF AUTHORIZATION NO. 8115
REGISTRATION # AA26000697

Approved Date 05-22-06

DATE TIME FILE

PASSENGER STATIONS

NW 82ND ST. STATION ROOF PLAN

Scale 1" = 40' Drawing PST-06 Sheet 13

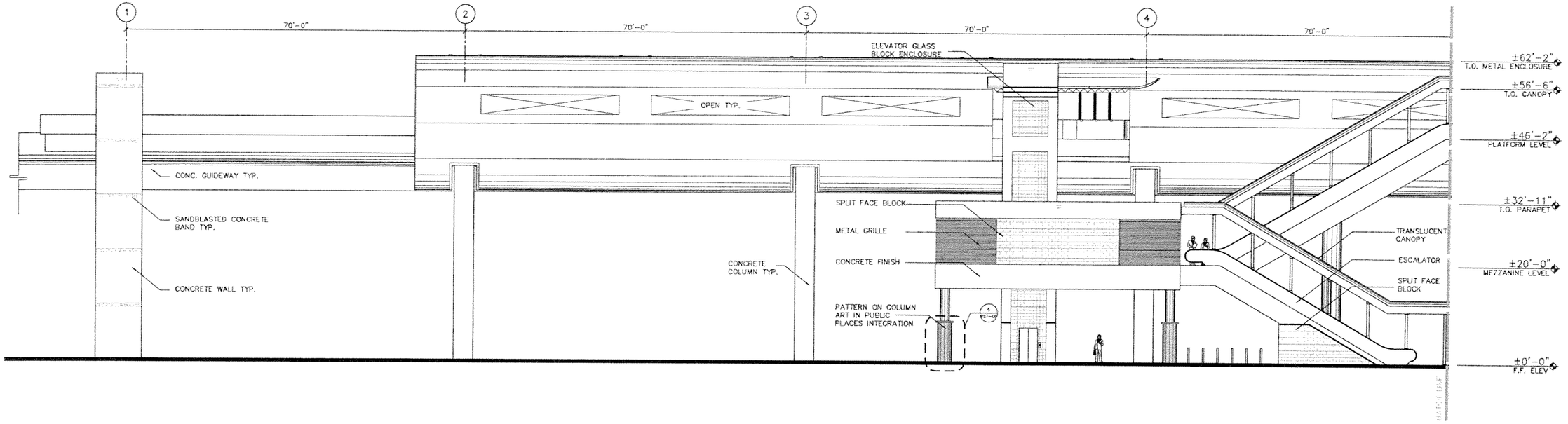

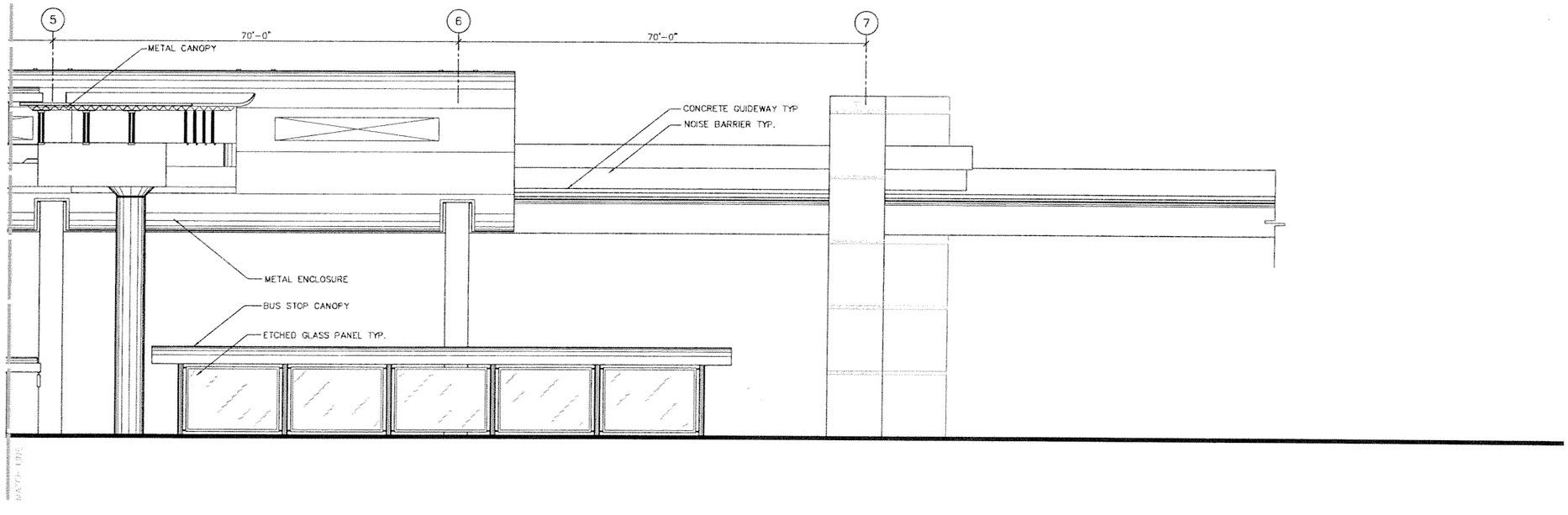

0 5 10 20

SUBJECT TO CHANGE

Designed by ML 5/06 Date	1	9/02/05			60% PROGRESS SET
Drawn by HC 5/06 Date	2	10/17/05			70% PROGRESS SET
Checked by ML 5/06 Date	3	3/15/06			90% REVISED PROGRESS SET
	4	5/22/06			100% SUBMITTAL
Approved by Date	No.	Date	By / Chk	App.	Revisions

NORTH CORRIDOR METRORAIL EXTENSION - PRELIMINARY ENGINEERING (100% SUBMITTAL)

MIAMI-DADE COUNTY

MIAMI-DADE TRANSIT

PARSONS
7600 CORPORATE CENTER DRIVE, SUITE 500
MIAMI, FLORIDA 33126
PHONE: (786) 464-1000 FAX: (786) 845-7119
CERTIFICATE OF AUTHORIZATION NO. 1636

Approved | Date

EARTHTECH
Transportation Services
architecture · engineering · construction
3750 NW 87th Avenue, Suite 300
Miami, Florida 33178-2030
CERTIFICATE OF AUTHORIZATION NO. 8115
REGISTRATION # AA26000681

Approved | Date 05-22-06

DATE TIME FILE

PASSENGER STATIONS

NW 82ND ST. STATION 1-EAST ELEVATION

Scale 1" = 20' | Drawing PST-07 | Sheet 14

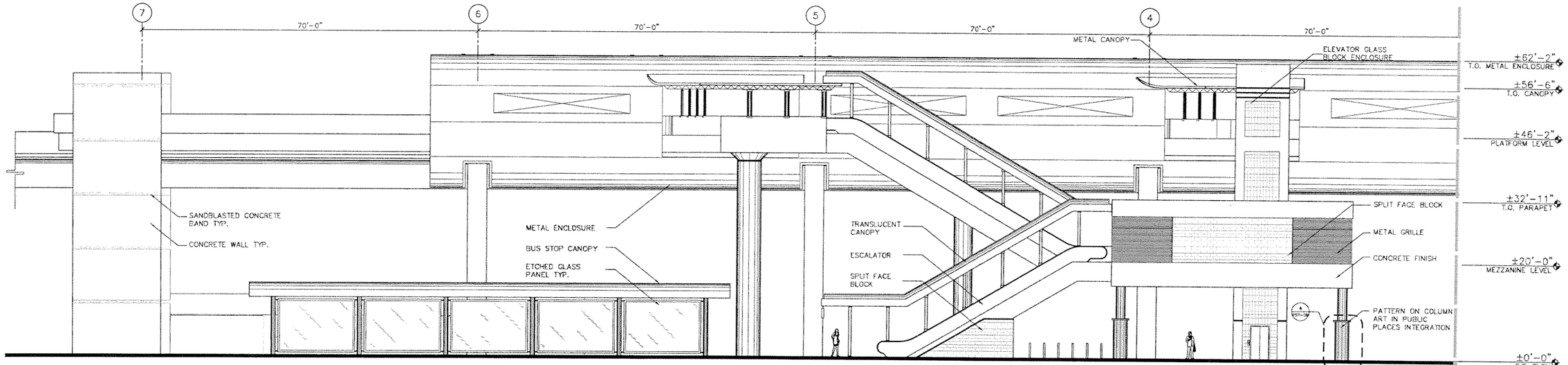

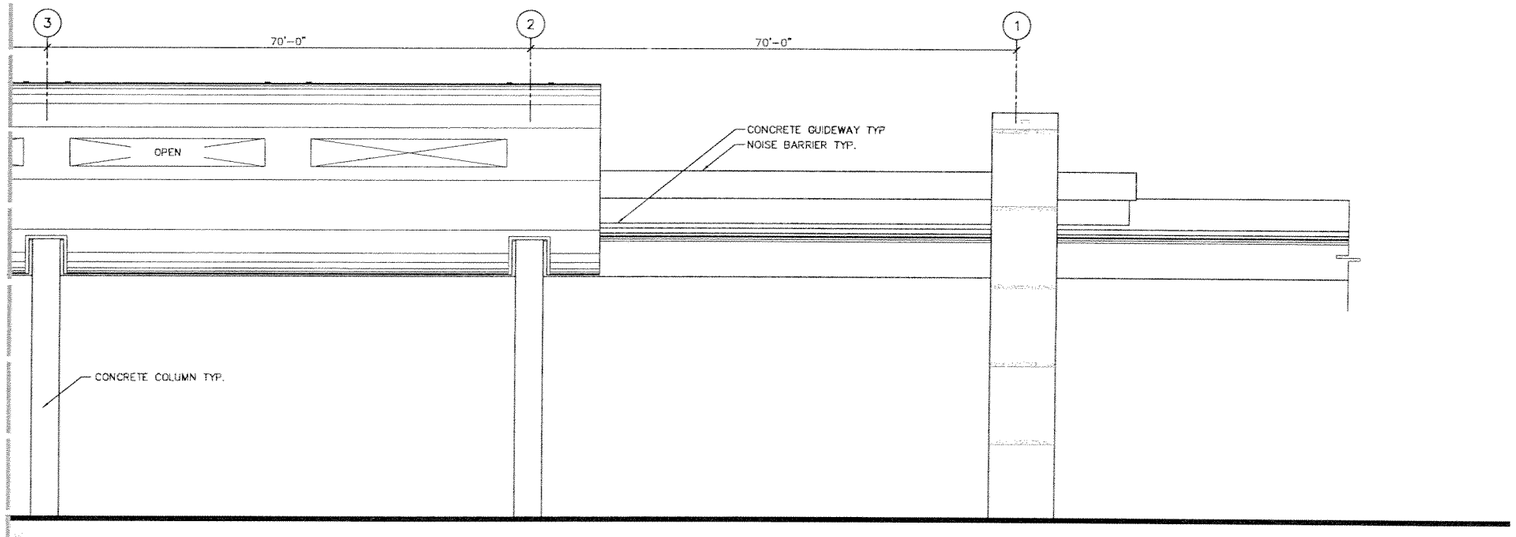

0 5 10 20

SUBJECT TO CHANGE

Designed by ML 5/06 Date	1	9/02/05			60% PROGRESS SET
Drawn by HC 5/06 Date	2	10/17/05			70% PROGRESS SET
Checked by ML 5/06 Date	3	3/10/06			90% REVISED PROGRESS SET
	4	5/22/06			100% SUBMITTAL
Approved by Date	No.	Date	By / Chk	App.	Revisions

NORTH CORRIDOR METRORAIL EXTENSION - PRELIMINARY ENGINEERING (100% SUBMITTAL)

MIAMI-DADE COUNTY — MIAMI-DADE TRANSIT

PARSONS
7600 CORPORATE CENTER DRIVE, SUITE 500
MIAMI, FLORIDA 33126
PHONE: (786) 454-1000 FAX: (786) 845-7119
CERTIFICATE OF AUTHORIZATION NO. 1836

EARTH TECH
Transportation Services
architecture · engineering · construction
5750 NW 87th Avenue, Suite 300
Miami, Florida 33178-2600
CERTIFICATE OF AUTHORIZATION NO. 8116
REGISTRATION # AA26000667

Approved	Date	Approved	Date	Scale	Drawing	Sheet
			05-22-06	1" = 20'	PST-08	15
			DATE TIME FILE			

PASSENGER STATIONS

NW 82ND ST. STATION 2-WEST ELEVATION

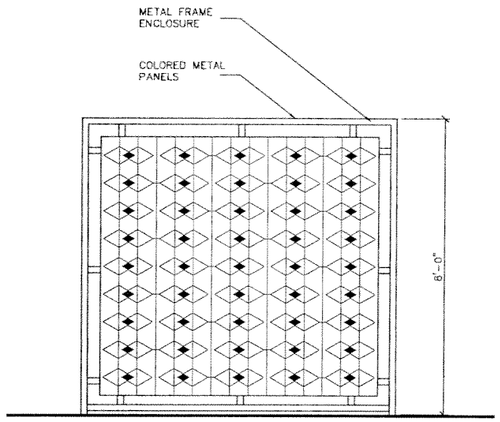

3- STATION DEFINING IMAGE ON MEZZANINE ENCLOSURE

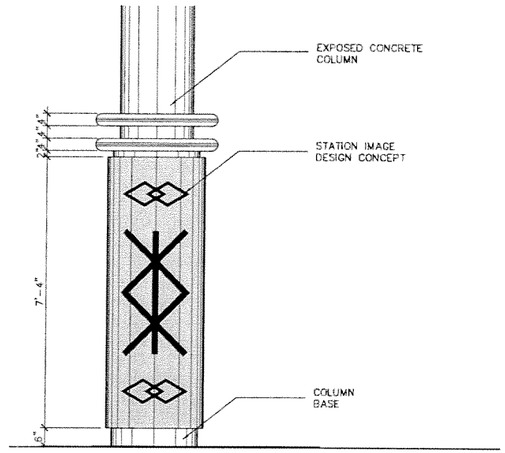

4-STATION DEFINING IMAGE ON CONCRETE COLUMNS

NOTE: FINAL DESIGN ON COLUMN AND ENCLOSURE TO BE DETERMINED DURING FINAL DESIGN PHASE.

SUBJECT TO CHANGE

Designed by ML 5/06	1	5/22/06			60% PROGRESS SET
Drawn by HC 5/06	2	10/17/06			70% PROGRESS SET
Checked by ML 5/06	3	3/1/06			90% REVISED PROGRESS SET
Approved by	4	5/22/06			100% SUBMITTAL
	No.	Date	By / Chk.	App.	Revisions

NORTH CORRIDOR METRORAIL EXTENSION - PRELIMINARY ENGINEERING (100% SUBMITTAL)

MIAMI-DADE COUNTY — MIAMI-DADE TRANSIT

PARSONS
7600 CORPORATE CENTER DRIVE, SUITE 500
MIAMI, FLORIDA 33126
PHONE: (786) 464-1000 FAX: (786) 845-7119
CERTIFICATE OF AUTHORIZATION NO. 1838
Approved | Date

EARTHTECH
Transportation Services
architecture · engineering · construction
3750 NW 87th Avenue, Suite 300
Miami, Florida 33178-2830
CERTIFICATE OF AUTHORIZATION NO. 8115
REGISTRATION # AA26000987
Approved | Date 05-22-06

DATE TIME FILE

PASSENGER STATIONS

NW 82ND ST. STATION ELEVATIONS

Scale NTS | Drawing PST-09 | Sheet 16

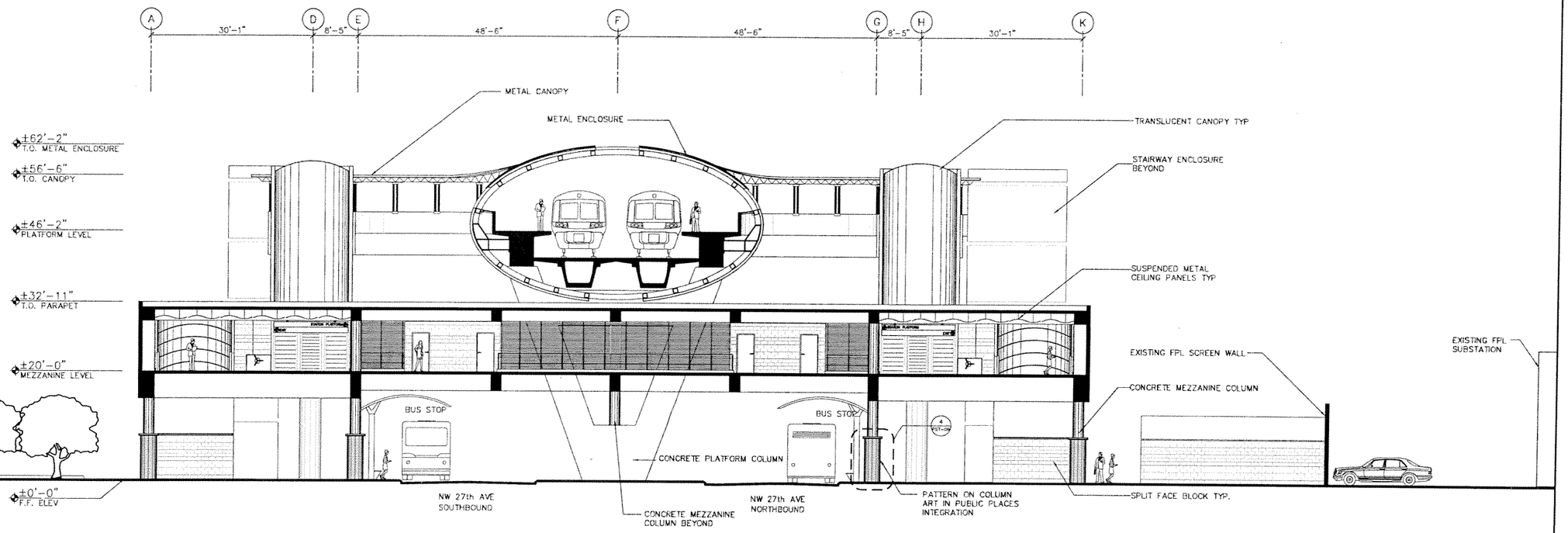

SECTION LOOKING NORTH

0 5 10 20

SUBJECT TO CHANGE

Designed by ML 5/06 Date	1	5/02/06			60% PROGRESS SET
	2	10/17/06			70% PROGRESS SET
Drawn by HC 5/06 Date	3	3/13/06			90% REVISED PROGRESS SET
	4	5/22/06			100% SUBMITTAL
Checked by ML 5/06 Date					
Approved by Date	No.	Date	By / Chk	App.	Revisions

NORTH CORRIDOR METRORAIL EXTENSION - PRELIMINARY ENGINEERING (100% SUBMITTAL)

MIAMI-DADE COUNTY

MIAMI-DADE TRANSIT

PARSONS
7600 CORPORATE CENTER DRIVE, SUITE 500
MIAMI, FLORIDA 33126
PHONE: (786) 464-1000 FAX: (786) 845-7119
CERTIFICATE OF AUTHORIZATION NO. 1838

Approved Date

EARTHTECH
Transportation Services
architecture · engineering · construction
3750 NW 87th Avenue, Suite 300
Miami, Florida 33178-2428
CERTIFICATE OF AUTHORIZATION NO. 8115
REGISTRATION # AA26000697

Approved Date 05-22-06
DATE TIME FILE

PASSENGER STATIONS

NW 82ND ST. STATION A-CROSS SECTION

Scale 1"=20' | Drawing PST-10 | Sheet 17

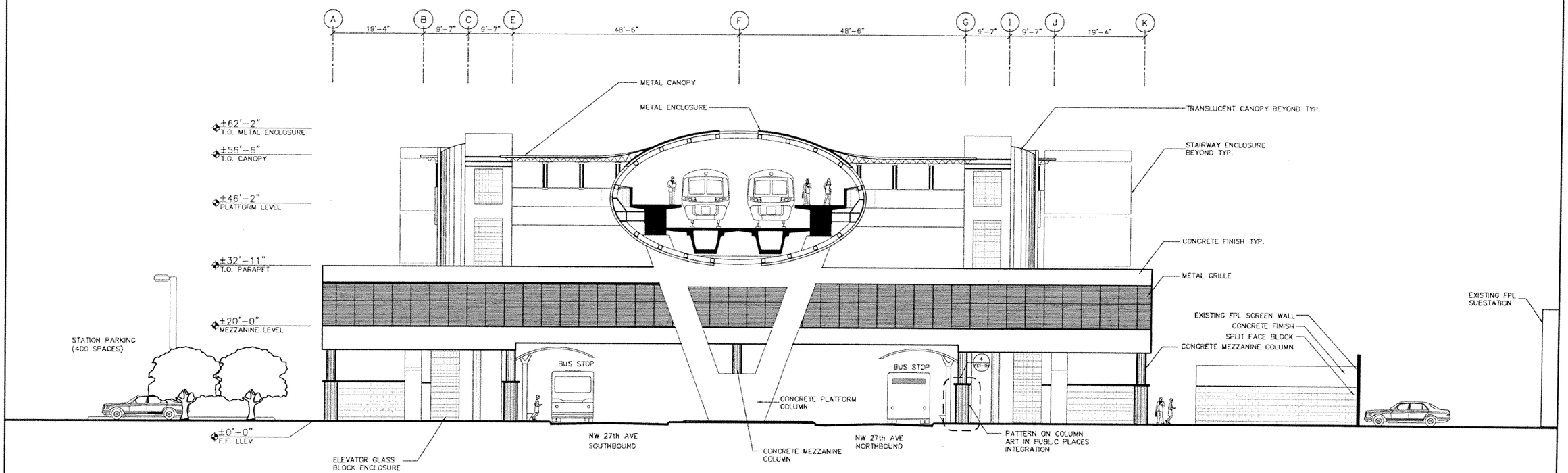

SECTION LOOKING NORTH

0 5 10 20

SUBJECT TO CHANGE

Designed by ML 5/06 Date	1	9/02/05				60% PROGRESS SET
	2	10/17/05				70% PROGRESS SET
Drawn by HC 5/06 Date	3	3/10/06				90% REVISED PROGRESS SET
	4	5/22/06				100% SUBMITTAL
Checked by ML 5/06 Date						
Approved by Date	No.	Date	By / Chk	App.	Revisions	

NORTH CORRIDOR METRORAIL EXTENSION - PRELIMINARY ENGINEERING (100% SUBMITTAL)

MIAMI-DADE COUNTY

MIAMI-DADE TRANSIT

PARSONS
7600 CORPORATE CENTER DRIVE, SUITE 500
MIAMI, FLORIDA 33126
PHONE: (786) 464-1000 FAX: (786) 845-7119
CERTIFICATE OF AUTHORIZATION NO. 1838

Approved | Date

EARTHTECH
Transportation Services
architecture · engineering · construction
3750 NW 87th Avenue, Suite 300
Miami, Florida 33178-2430
CERTIFICATE OF AUTHORIZATION NO. 8115
REGISTRATION # AA25000087

Approved | Date 05-22-06

DATE TIME FILE

PASSENGER STATIONS

NW 82ND ST. STATION
B-CROSS SECTION

Scale 1" = 20' | Drawing PST-11 | Sheet 18

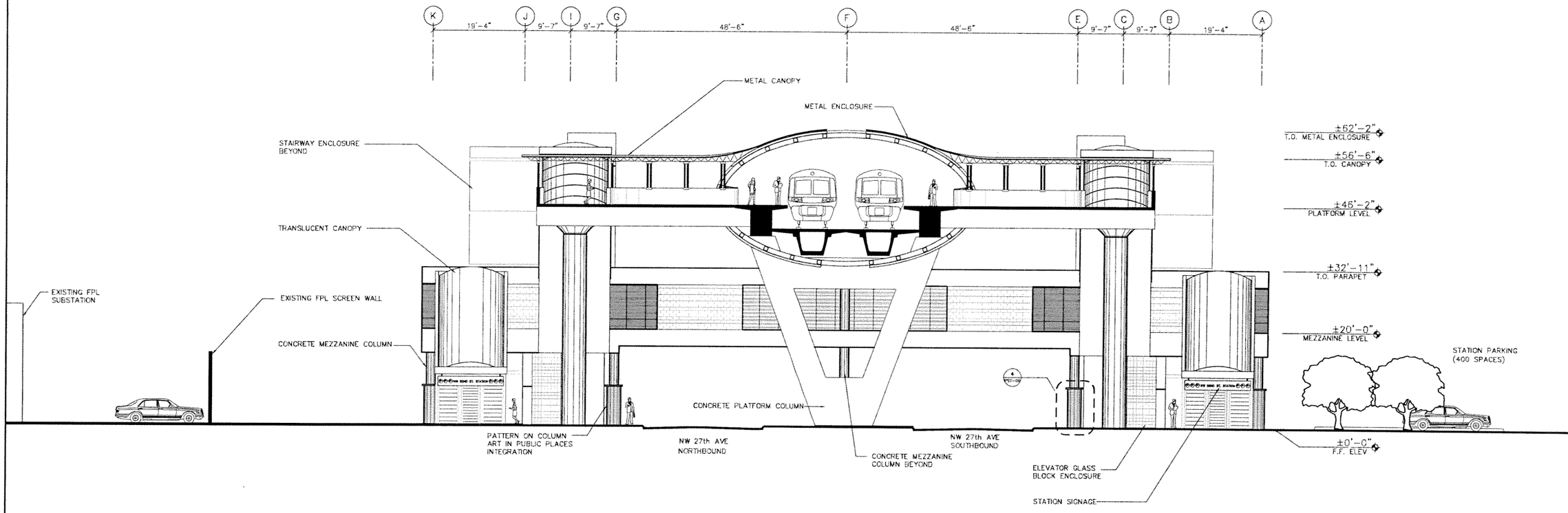

SECTION LOOKING SOUTH

0 5 10 20

SUBJECT TO CHANGE

No.	Date	By	Chk	App.	Revisions
1	5/12/06				60% PROGRESS SET
2	10/17/05				70% PROGRESS SET
3	3/10/06				90% REVISED PROGRESS SET
4	5/22/06				100% SUBMITTAL

Designed by ML 5/26 Date
Drawn by HC 5/26 Date
Checked by ML 5/26 Date
Approved by Date

NORTH CORRIDOR METRORAIL EXTENSION - PRELIMINARY ENGINEERING (100% SUBMITTAL)

MIAMI-DADE COUNTY

MIAMI-DADE TRANSIT

PARSONS
7600 CORPORATE CENTER DRIVE, SUITE 500
MIAMI, FLORIDA 33126
PHONE: (786) 464-1000 FAX: (786) 845-7119
CERTIFICATE OF AUTHORIZATION NO. 1838

Approved Date

EARTHTECH
Transportation Services
architecture · engineering · construction
3756 NW 87th Avenue, Suite 300
Miami, Florida 33178-2430
CERTIFICATE OF AUTHORIZATION NO. 8115
REGISTRATION # AA25000667

Approved Date 05-22-06

DATE TIME FILE

PASSENGER STATIONS

NW 82ND ST. STATION C-CROSS SECTION

Scale 1" = 20' Drawing PST-12 Sheet 19

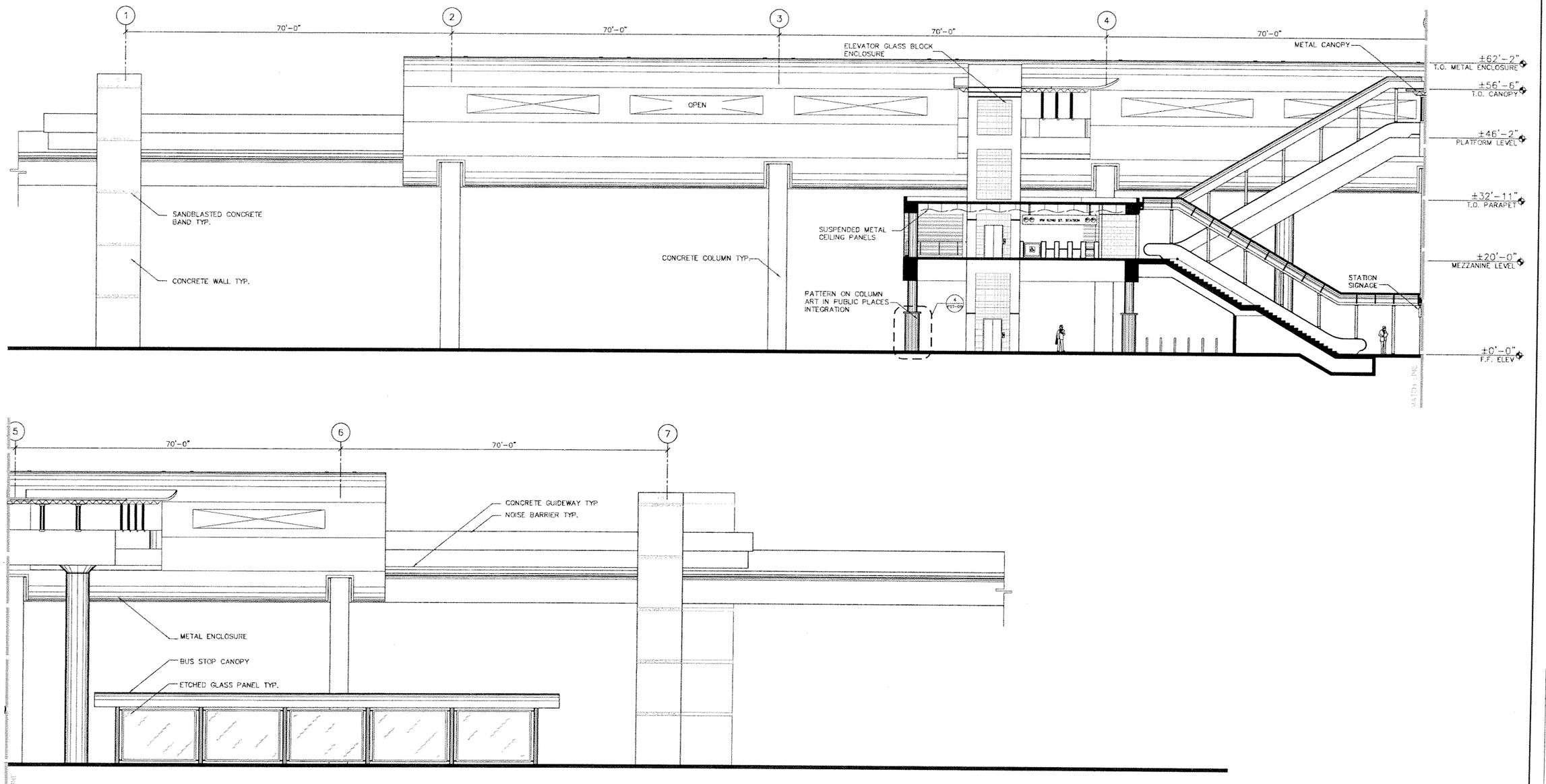

SECTION LOOKING WEST

0 5 10 20

SUBJECT TO CHANGE

Designed by ML 5/06	1	9/02/05			60% PROGRESS SET
Drawn by HC 5/06	2	10/17/05			70% PROGRESS SET
Checked by ML 5/06	3	3/10/06			90% REVISED PROGRESS SET
	4	5/22/06			100% SUBMITTAL
Approved by Date	No.	Date	By / Chk	App.	Revisions

NORTH CORRIDOR METRORAIL EXTENSION - PRELIMINARY ENGINEERING (100% SUBMITTAL)

MIAMI-DADE COUNTY

MIAMI-DADE TRANSIT

PARSONS
7600 CORPORATE CENTER DRIVE, SUITE 500
MIAMI, FLORIDA 33126
PHONE: (786) 464-1000 FAX: (786) 845-7119
CERTIFICATE OF AUTHORIZATION NO. 1836

EARTHTECH
Transportation Services
architecture · engineering · construction
3750 NW 87th Avenue, Suite 300
Miami, Florida 33178-2430
CERTIFICATE OF AUTHORIZATION NO. 8115
REGISTRATION # AA26002287

Approved | Date | Approved | Date 05-22-06

PASSENGER STATIONS

NW 82ND ST. STATION D-SECTION

Scale 1" = 20' | Drawing PST-13 | Sheet 20

DATE TIME FILE

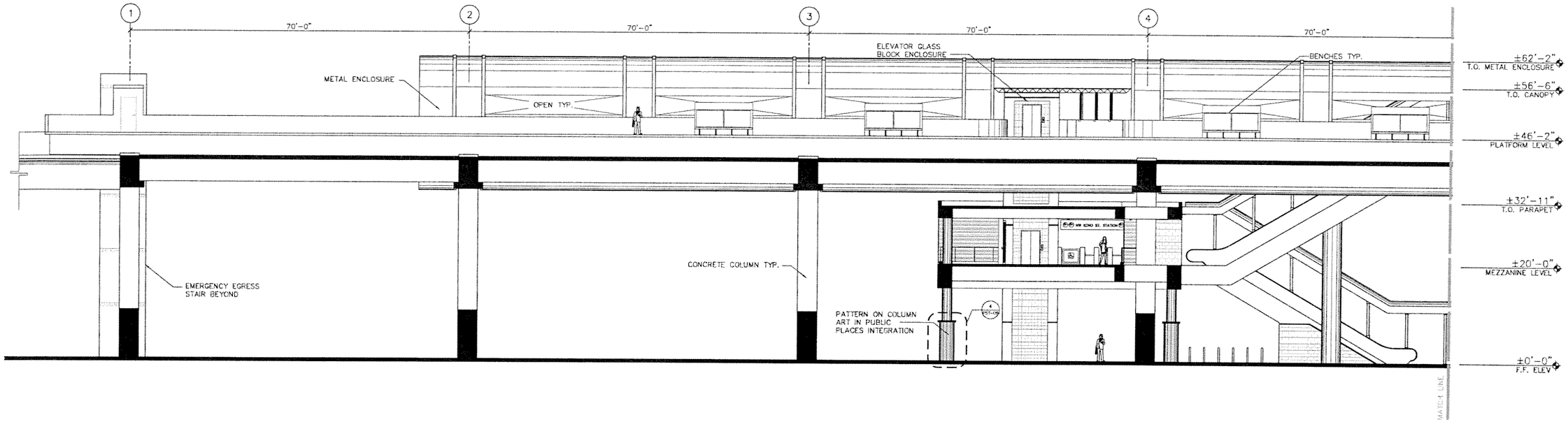

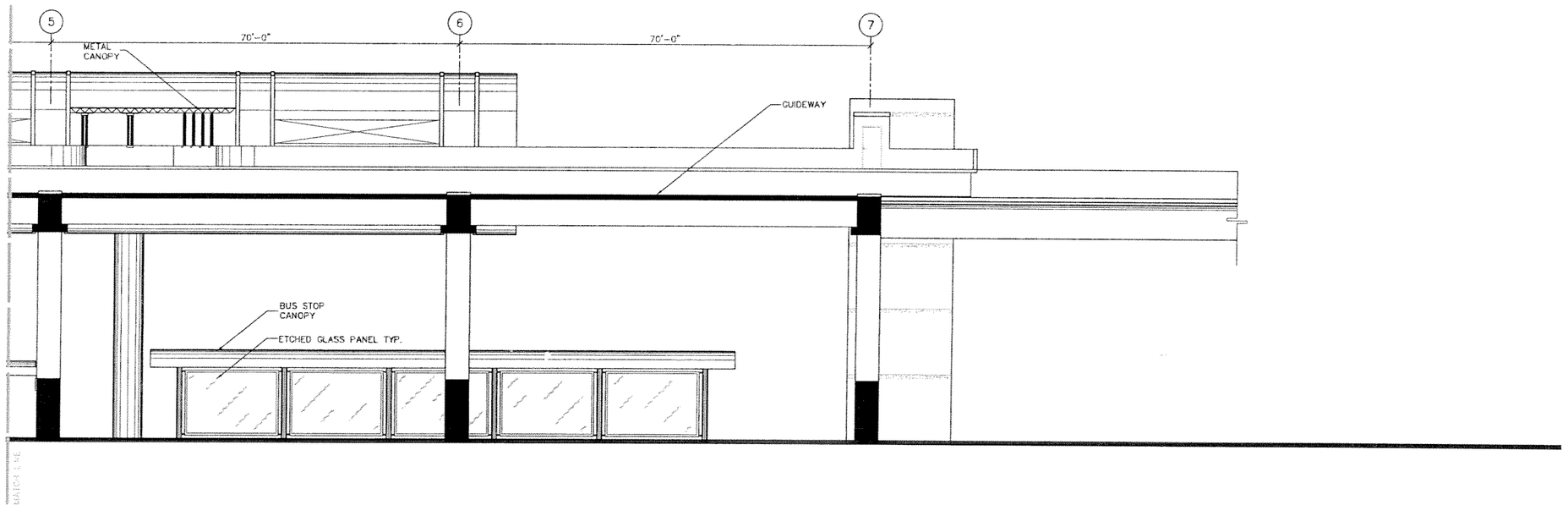

SECTION LOOKING WEST

0 5 10 20

SUBJECT TO CHANGE

No.	Date	By / Chk	App.	Revisions
1	9/02/05			60% PROGRESS SET
2	10/17/05			70% PROGRESS SET
3	3/13/06			90% REVISED PROGRESS SET
4	5/22/06			100% SUBMITTAL

Designed by ML 5/06 Date
Drawn by HC 5/06 Date
Checked by ML 5/06 Date
Approved by Date

NORTH CORRIDOR METRORAIL EXTENSION - PRELIMINARY ENGINEERING (100% SUBMITTAL)

MIAMI-DADE COUNTY

MIAMI-DADE TRANSIT

PARSONS
7600 CORPORATE CENTER DRIVE, SUITE 500
MIAMI, FLORIDA 33126
PHONE: (786) 464-1000 FAX: (786) 845-7119
CERTIFICATE OF AUTHORIZATION NO. 1838

Approved Date

EARTH TECH
Transportation Services
architecture · engineering · construction
3750 NW 87th Avenue, Suite 300
Miami, Florida 33178-2430
CERTIFICATE OF AUTHORIZATION NO. 8155
REGISTRATION # AA26000367

Approved Date 05-22-06

DATE TIME FILE

PASSENGER STATIONS

NW 82ND ST. STATION
E-SECTION

Scale 1" = 20' | Drawing PST-14 | Sheet 21

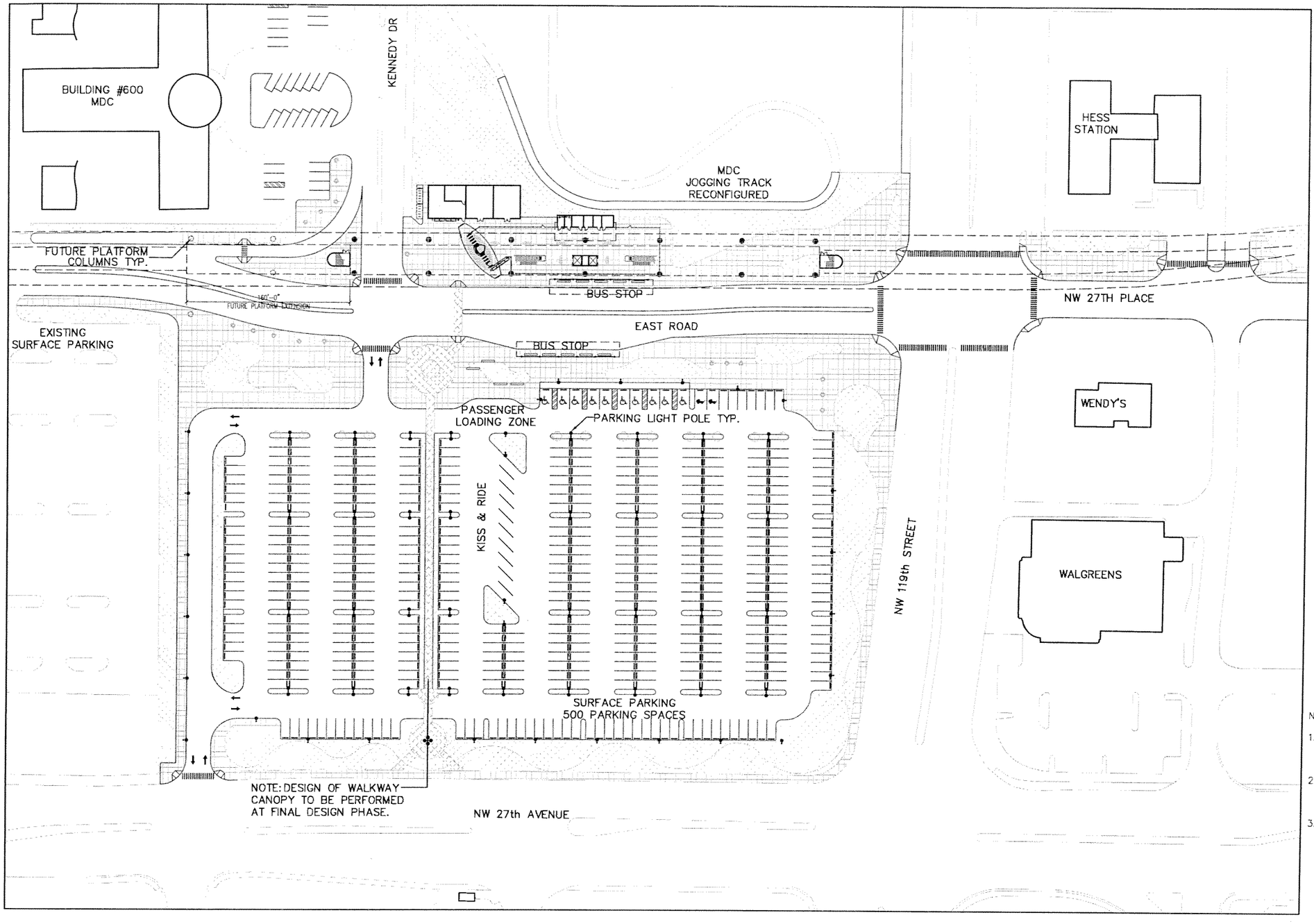

NOTE:

1. FOR GUIDEWAY COLUMN LOCATIONS OUTSIDE THE STATION LIMITS REFER TO GUIDEWAY STRUCTURE DRAWINGS.
2. ARCHITECTURAL SITEPLAN SHOWS CONFIGURATION OF GREEN AREAS ONLY, REFER TO LANDSCAPE DRAWINGS FOR DETAILS.
3. FINAL LOCATION FOR POWER SUBSTATION TO BE DETERMINED AFTER PRELIMINARY ENGINEERING PHASE.

0 25 50 100

SUBJECT TO CHANGE

Designed by ML 5/06	1	6/02/05			60% PROGRESS SET
	2	10/17/05			70% PROGRESS SET
Drawn by DR 5/06	3	3/10/06			90% REVISED PROGRESS SET
	4	5/22/06			100% SUBMITTAL
Checked by ML 5/06					
Approved by Date	No.	Date	By / Chk	App.	Revisions

NORTH CORRIDOR METRORAIL EXTENSION - PRELIMINARY ENGINEERING (100% SUBMITTAL)

MIAMI-DADE COUNTY — MIAMI-DADE TRANSIT

PARSONS
7600 CORPORATE CENTER DRIVE, SUITE 500
MIAMI, FLORIDA 33126
PHONE: (786) 464-1000 FAX: (786) 845-7119
CERTIFICATE OF AUTHORIZATION NO. 1838

EARTHTECH
Transportation Services
architecture · engineering · construction
3760 NW 87th Avenue, Suite 300
Miami, Florida 33178-2428
CERTIFICATE OF AUTHORIZATION NO. 8155
REGISTRATION # AA26000697

Approved	Date	Approved	Date
			05-22-06

DATE TIME FILE

PASSENGER STATIONS

NW 119TH ST. STATION SITE PLAN

Scale 1" = 100' Drawing PST-15 Sheet 22

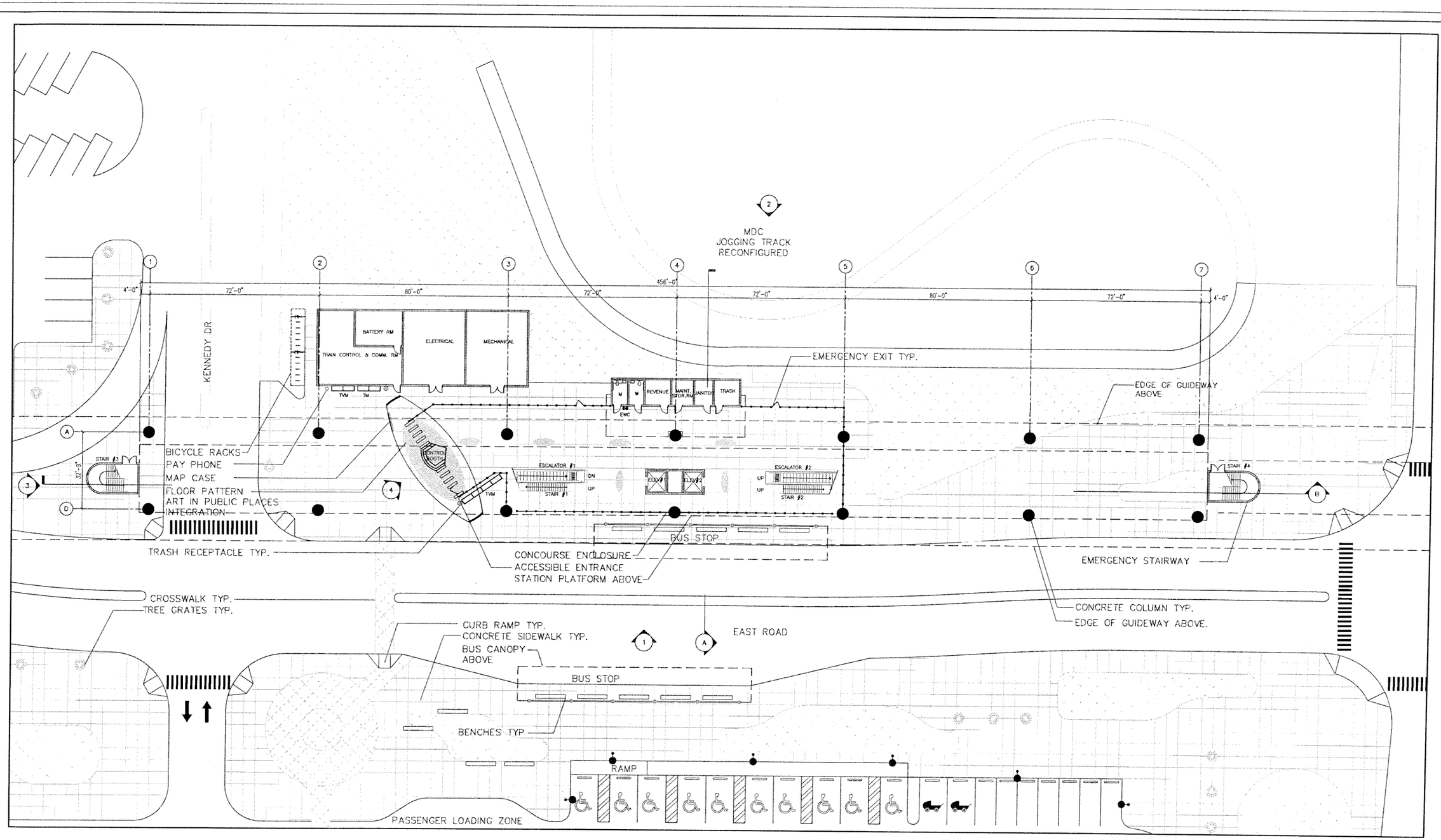

SUBJECT TO CHANGE

Designed by ML	5/06 Date	1	9/02/05			60% PROGRESS SET
		2	10/17/05			70% PROGRESS SET
Drawn by DR	5/06 Date	3	3/10/06			90% REVISED PROGRESS SET
		4	5/22/06			100% SUBMITTAL
Checked by ML	5/06 Date					
Approved by	Date	No.	Date	By / Chk	App.	Revisions

NORTH CORRIDOR METRORAIL EXTENSION - PRELIMINARY ENGINEERING (100% SUBMITTAL)

MIAMI-DADE COUNTY

MIAMI-DADE TRANSIT

PARSONS
7600 CORPORATE CENTER DRIVE, SUITE 500
MIAMI, FLORIDA 33126
PHONE: (786) 464-1000 FAX: (786) 845-7119
CERTIFICATE OF AUTHORIZATION NO. 1838

Approved | Date

EARTHTECH
Transportation Services
architecture · engineering · construction
3750 NW 87th Avenue, Suite 300
Miami, Florida 33178-2430
CERTIFICATE OF AUTHORIZATION NO. 8115
REGISTRATION # AA26000087

Approved | Date 05-22-06

DATE TIME FILE

PASSENGER STATIONS

NW 119TH ST. STATION PLAZA LEVEL PLAN

Scale 1" = 40' | Drawing PST-16 | Sheet 23

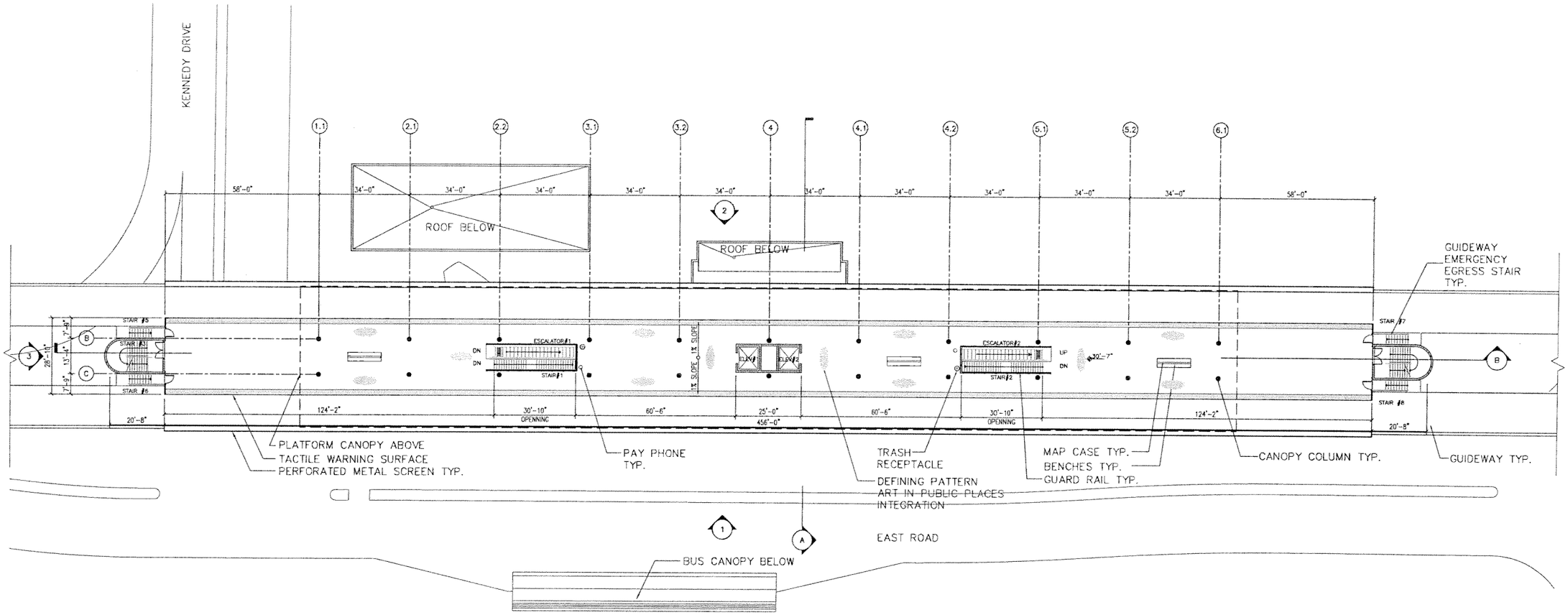

0 10 20 40

SUBJECT TO CHANGE

No.	Date	By / Chk	App.	Revisions
1	9/02/05			60% PROGRESS SET
2	10/17/05			70% PROGRESS SET
3	3/10/06			90% REVISED PROGRESS SET
4	5/22/06			100% SUBMITTAL

Designed by ML 5/06 Date
Drawn by DR 5/06 Date
Checked by ML 5/06 Date
Approved by Date

NORTH CORRIDOR METRORAIL EXTENSION - PRELIMINARY ENGINEERING (100% SUBMITTAL)

MIAMI-DADE COUNTY
MIAMI-DADE TRANSIT

PARSONS
7600 CORPORATE CENTER DRIVE, SUITE 500
MIAMI, FLORIDA 33126
PHONE: (786) 464-1000 FAX: (786) 845-7119
CERTIFICATE OF AUTHORIZATION NO. 1836
Approved Date

EARTH TECH
Transportation Services
architecture · engineering · construction
3750 NW 87th Avenue, Suite 300
Miami, Florida 33178-2430
CERTIFICATE OF AUTHORIZATION NO. 0155
REGISTRATION # AA26000697
Approved Date 05-22-06

DATE TIME FILE

PASSENGER STATIONS

NW 119TH ST. STATION PLATFORM PLAN

Scale 1"=40' Drawing PST-17 Sheet 24

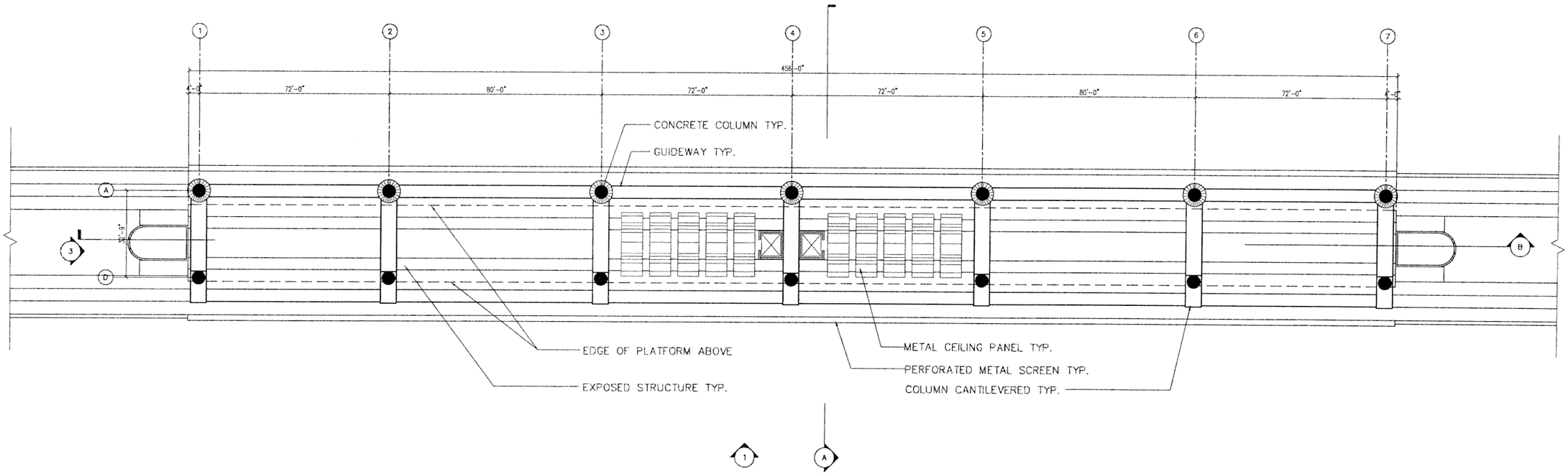

0 10 20 40

SUBJECT TO CHANGE

Designed by ML 5/06	1	9/22/05			60% PROGRESS SET
Drawn by DR 5/06	2	10/17/05			70% PROGRESS SET
Checked by ML 5/06	3	3/13/06			90% REVISED PROGRESS SET
Approved by	4	5/22/06			100% SUBMITTAL
Date	No.	Date	By / Chk	App.	Revisions

NORTH CORRIDOR METRORAIL EXTENSION - PRELIMINARY ENGINEERING (100% SUBMITTAL)

MIAMI-DADE COUNTY

MIAMI-DADE TRANSIT

PARSONS
7600 CORPORATE CENTER DRIVE, SUITE 500
MIAMI, FLORIDA 33126
PHONE: (786) 464-1000 FAX: (786) 845-7119
CERTIFICATE OF AUTHORIZATION NO. 1838

Approved | Date

EARTHTECH
Transportation Services
architecture · engineering · construction
3750 NW 87th. Avenue, Suite 300
Miami, Florida 33178-2435
CERTIFICATE OF AUTHORIZATION NO. 8115
REGISTRATION # AA26000697

Approved | Date 05-22-06

DATE TIME FILE

PASSENGER STATIONS

NW 119TH ST. STATION REFLECTED CEILING PLAN

Scale 1" = 40' | Drawing PST-18 | Sheet 25

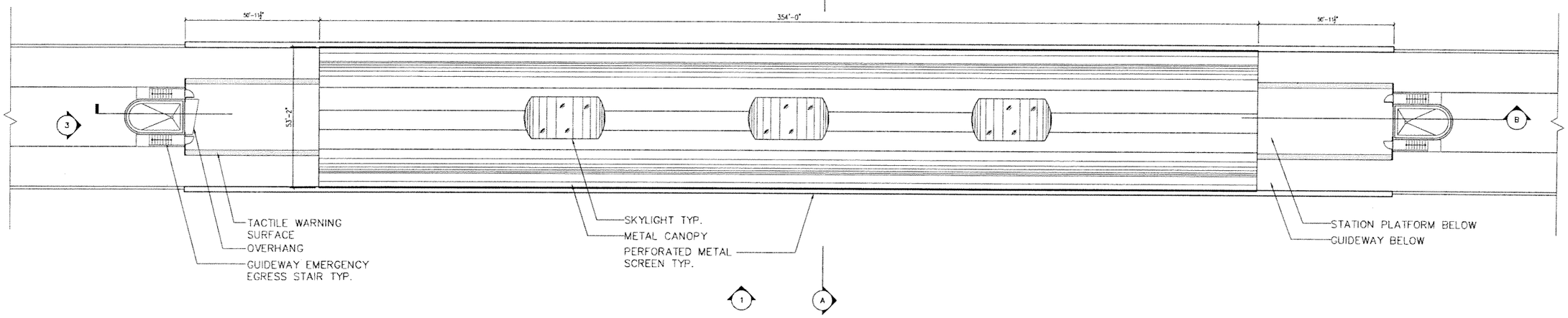

0 10 20 40

SUBJECT TO CHANGE

	No.	Date	By	Chk	App.	Revisions
	1	9/02/05				60% PROGRESS SET
	2	10/17/05				70% PROGRESS SET
	3	3/10/06				90% REVISED PROGRESS SET
	4	5/22/06				100% SUBMITTAL

Designed by ML 5/06 Date
Drawn by DR 5/06 Date
Checked by ML 5/06 Date
Approved by Date

NORTH CORRIDOR METRORAIL EXTENSION - PRELIMINARY ENGINEERING (100% SUBMITTAL)

MIAMI-DADE COUNTY
MIAMI-DADE TRANSIT

PARSONS
7600 CORPORATE CENTER DRIVE, SUITE 500
MIAMI, FLORIDA 33126
PHONE: (786) 464-1000 FAX: (786) 845-7119
CERTIFICATE OF AUTHORIZATION NO. 1838
Approved Date

EARTHTECH
Transportation Services
architecture · engineering · construction
3190 NW 87th Avenue, Suite 300
Miami, Florida 33172-2430
CERTIFICATE OF AUTHORIZATION NO. 8115
REGISTRATION # AA26000867
Approved Date 05-22-06
DATE TIME FILE

PASSENGER STATIONS

NW 119TH ST. STATION ROOF PLAN

Scale 1"=40' Drawing PST-19 Sheet 26

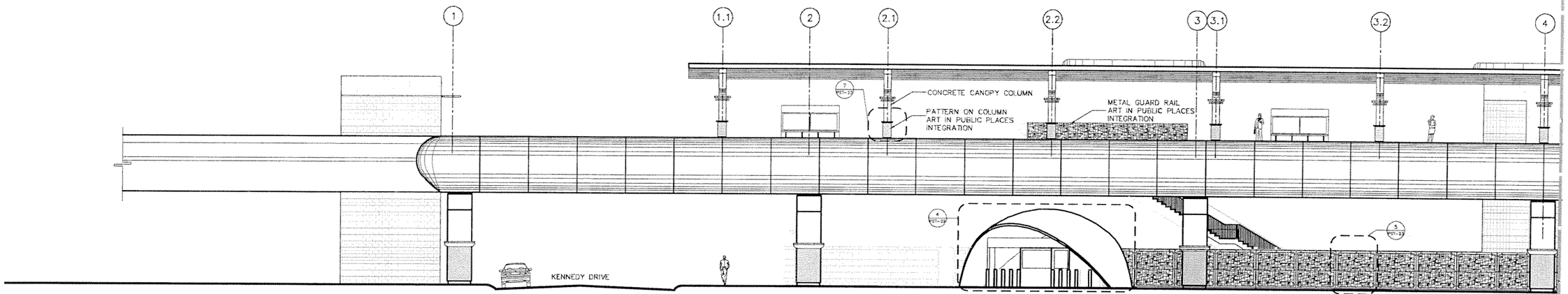

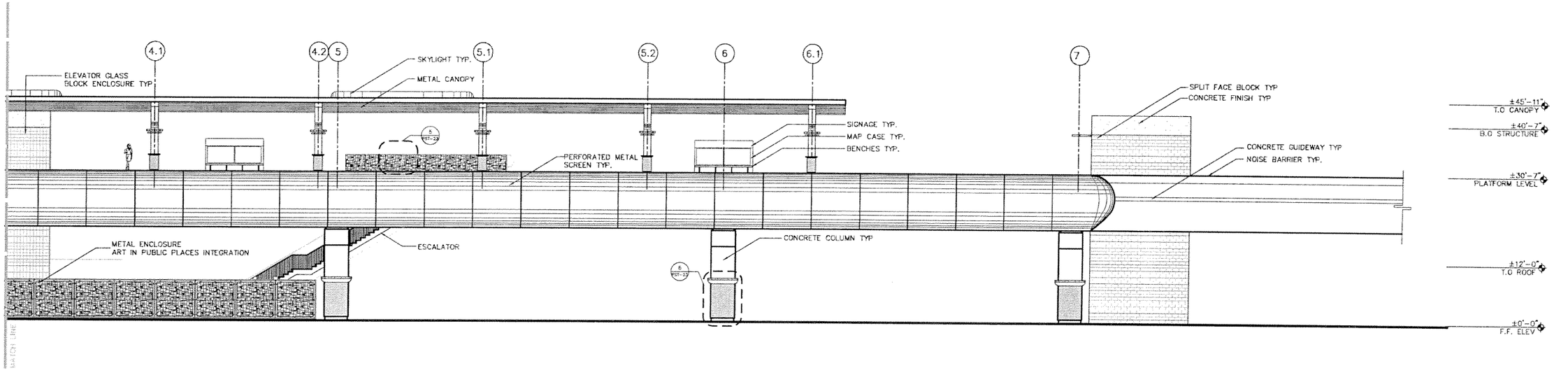

0 5 10 20

SUBJECT TO CHANGE

Designed by ML 5/06 Date	No.	Date	By / Chk	App.	Revisions
Drawn by DR 5/06 Date	1	9/02/05			60% PROGRESS SET
Checked by ML 5/06 Date	2	10/17/05			70% PROGRESS SET
	3	3/10/06			90% REVISED PROGRESS SET
	4	5/22/06			100% SUBMITTAL
Approved by Date					

NORTH CORRIDOR METRORAIL EXTENSION - PRELIMINARY ENGINEERING (100% SUBMITTAL)

MIAMI-DADE COUNTY

MIAMI-DADE TRANSIT

PARSONS
7600 CORPORATE CENTER DRIVE, SUITE 500
MIAMI, FLORIDA 33126
PHONE: (786) 464-1000 FAX: (786) 845-7119
CERTIFICATE OF AUTHORIZATION NO. 1838

Approved | Date

EARTH TECH
Transportation Services
architecture · engineering · construction
2750 NW 87th Avenue, Suite 300
Miami, Florida 33172-2630
CERTIFICATE OF AUTHORIZATION NO. 8115
REGISTRATION # AA26000697

Approved | Date 05-22-06

DATE TIME FILE

PASSENGER STATIONS

NW 119TH ST. STATION 1-EAST ELEVATIONS

Scale 1"=20' | Drawing PST-20 | Sheet 27

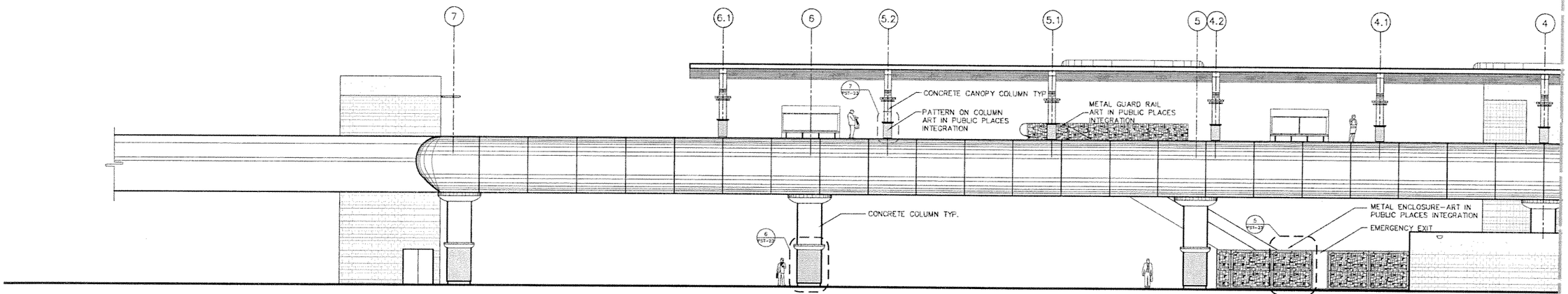

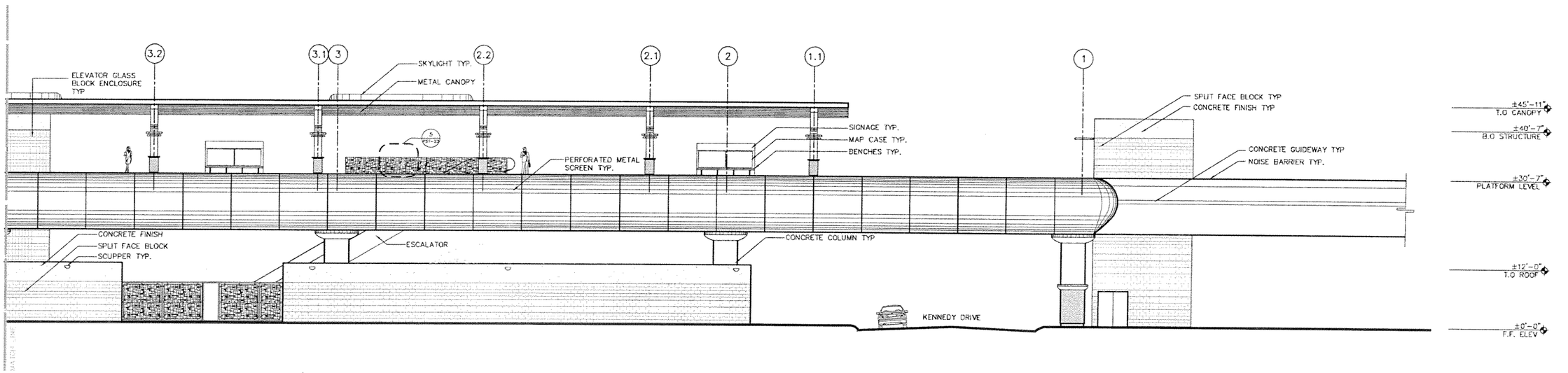

0 5 10 20

SUBJECT TO CHANGE

No.	Date	By / Chk	App.	Revisions
1	9/02/05			60% PROGRESS SET
2	10/17/05			70% PROGRESS SET
3	3/10/06			90% REVISED PROGRESS SET
4	5/22/06			100% SUBMITTAL

Designed by ML 5/06 Date
Drawn by DR 5/06 Date
Checked by ML 5/06 Date
Approved by Date

NORTH CORRIDOR METRORAIL EXTENSION - PRELIMINARY ENGINEERING (100% SUBMITTAL)

MIAMI-DADE COUNTY
MIAMI-DADE TRANSIT

PARSONS
7600 CORPORATE CENTER DRIVE, SUITE 500
MIAMI, FLORIDA 33126
PHONE: (786) 464-1000 FAX: (786) 845-7119
CERTIFICATE OF AUTHORIZATION NO. 1836

Approved Date

EARTHTECH
Transportation Services
architecture · engineering · construction
3750 NW 87th Avenue, Suite 300
Miami, Florida 33178-2430
CERTIFICATE OF AUTHORIZATION NO. 8115
REGISTRATION # AA26000881

Approved Date 05-22-06

DATE TIME FILE

PASSENGER STATIONS

NW 119TH ST. STATION 2-WEST ELEVATIONS

Scale 1" = 20' Drawing PST-21 Sheet 28

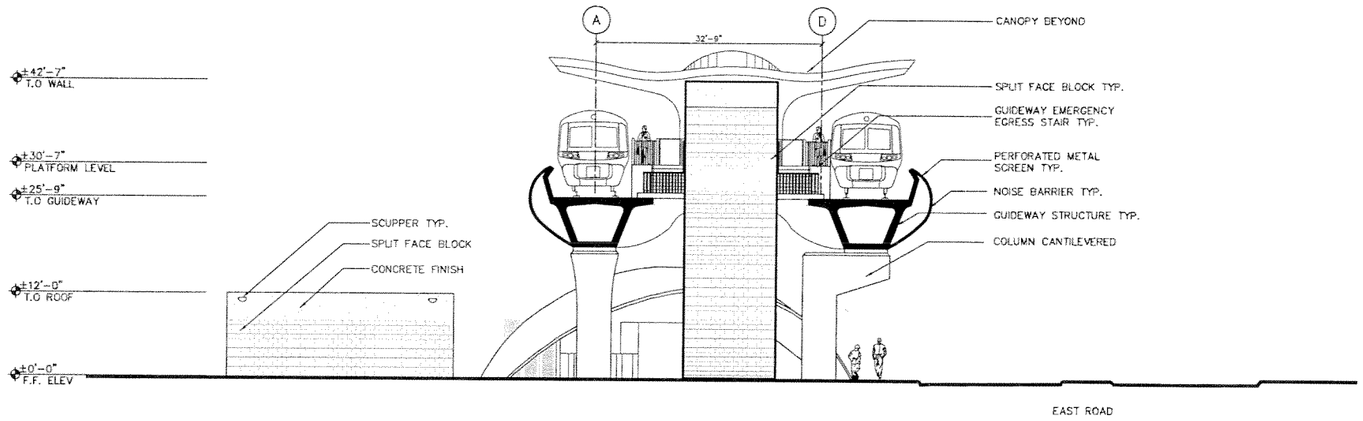

3- SOUTH ELEVATION

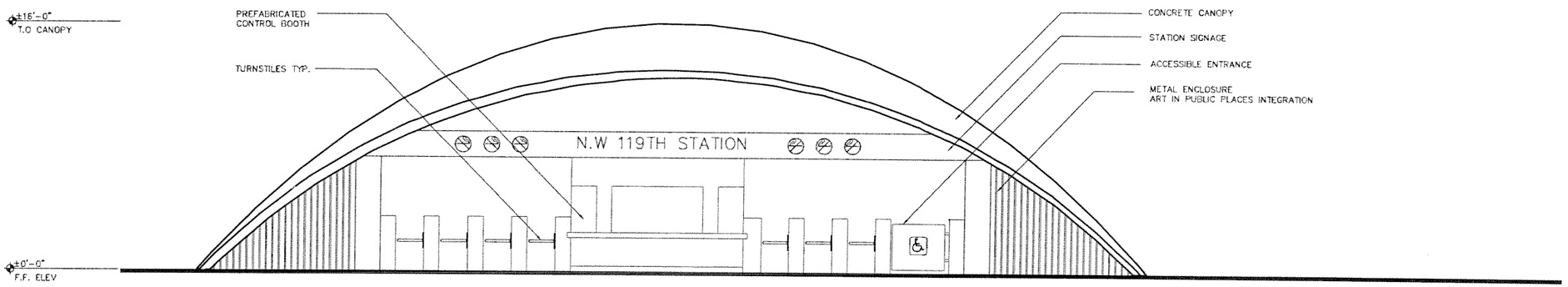

4-ENTRANCE CANOPY ELEVATION

Designed by ML 5/06	1	9/02/05			60% PROGRESS SET
Date	2	10/17/05			70% PROGRESS SET
Drawn by DR 5/06	3	3/10/06			90% REVISED PROGRESS SET
Date	4	5/22/06			100% SUBMITTAL
Checked by ML 5/06					
Date					
Approved by Date	No.	Date	By / Chk	App.	Revisions

SUBJECT TO CHANGE

NORTH CORRIDOR METRORAIL EXTENSION - PREliminary ENGINEERING (100% SUBMITTAL)

PASSENGER STATIONS

MIAMI-DADE COUNTY

MIAMI-DADE TRANSIT

PARSONS
7600 CORPORATE CENTER DRIVE, SUITE 500
MIAMI, FLORIDA 33126
PHONE: (786) 464-1000 FAX: (786) 845-7119
CERTIFICATE OF AUTHORIZATION NO. 1838

Approved | Date

EARTHTECH
Transportation Services
architecture · engineering · construction
3750 NW 87th Avenue, Suite 300
Miami, Florida 33178-2400
CERTIFICATE OF AUTHORIZATION NO. 8115
REGISTRATION # AA26000667

Approved | Date 05-22-06

DATE TIME FILE

NW 119TH ST. STATION ELEVATIONS

Scale NTS | Drawing PST-22 | Sheet 29

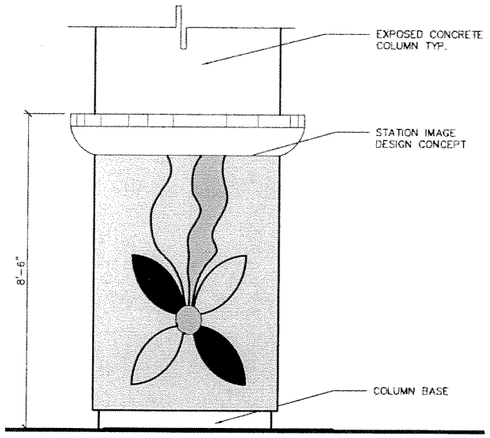

5-STATION DEFINING IMAGE ON STATION/GUIDEWAY SUPPORT COLUMNS

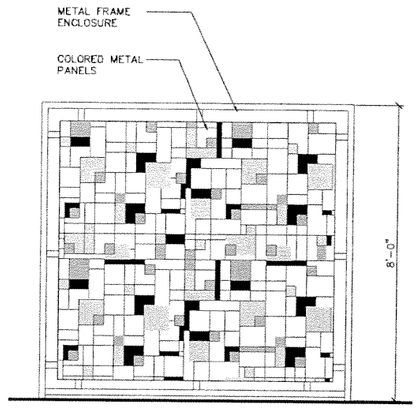

6-STATION DEFINING IMAGE ON CONCOURSE & ESCALATOR ENCLOSURE

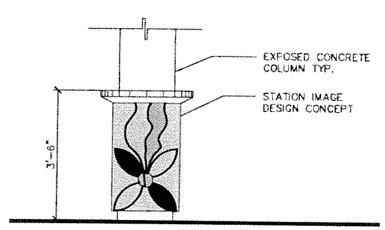

7-STATION DEFINING IMAGE ON STATION COLUMNS

NOTE: FINAL DESIGN ON COLUMN AND ENCLOSURE TO BE DETERMINED DURING FINAL DESIGN PHASE.

SUBJECT TO CHANGE

Designed by ML 5/06	No.	Date	By / Chk	App.	Revisions
Drawn by DR 5/06	1	04/21/06			60% PROGRESS SET
Checked by ML 5/06	2	10/17/06			70% PROGRESS SET
Approved by Date	3	5/10/06			90% REVISED PROGRESS SET
	4	5/22/06			100% SUBMITTAL

NORTH CORRIDOR METRORAIL EXTENSION - PRELIMINARY ENGINEERING (100% SUBMITTAL)

MIAMI-DADE COUNTY — MIAMI-DADE TRANSIT

PARSONS
7600 CORPORATE CENTER DRIVE, SUITE 500
MIAMI, FLORIDA 33126
PHONE: (786) 464-1000 FAX: (786) 845-7119
CERTIFICATE OF AUTHORIZATION NO. 1836

Approved ____ Date ____

EARTHTECH
Transportation Services
architecture · engineering · construction
3750 NW 87th Avenue, Suite 300
Miami, Florida 33178-2430
CERTIFICATE OF AUTHORIZATION NO. 8115
REGISTRATION # AA26000697

Approved ____ Date 05-22-06

DATE TIME FILE

PASSENGER STATIONS

NW 119TH ST. STATION ELEVATIONS

Scale NTS | Drawing PST-23 | Sheet 30

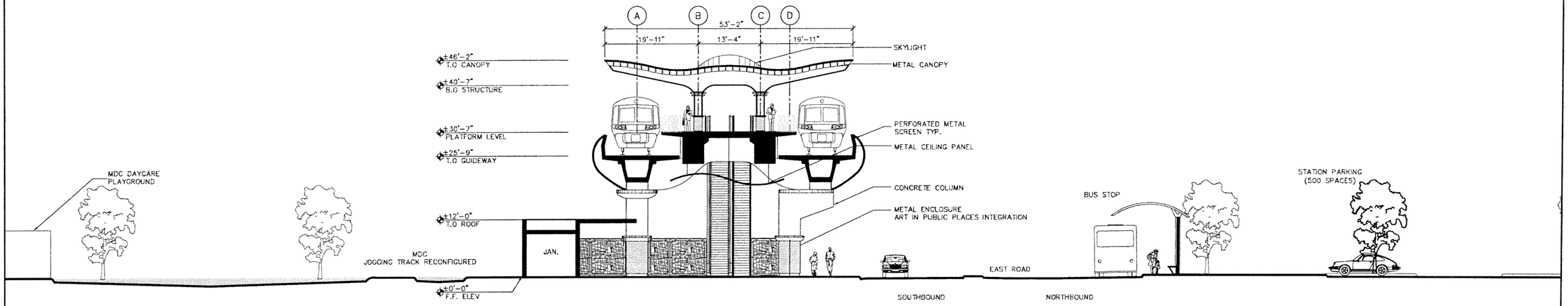

SECTION LOOKING NORTH

0 5 10 20

SUBJECT TO CHANGE

No.	Date	By	Chk	App.	Revisions
1	9/02/05				60% PROGRESS SET
2	10/17/05				70% PROGRESS SET
3	3/19/06				90% REVISED PROGRESS SET
4	5/22/06				100% SUBMITTAL

Designed by ML 5/06 Date
Drawn by DR 5/06 Date
Checked by ML 5/06 Date
Approved by Date

NORTH CORRIDOR METRORAIL EXTENSION - PRELIMINARY ENGINEERING (100% SUBMITTAL)

MIAMI-DADE COUNTY

MIAMI-DADE TRANSIT

PARSONS
7600 CORPORATE CENTER DRIVE, SUITE 500
MIAMI, FLORIDA 33126
PHONE: (786) 464-1000 FAX: (786) 845-7119
CERTIFICATE OF AUTHORIZATION NO. 1838

Approved Date

EARTHTECH
Transportation Services
architecture · engineering · construction
3750 NW 87th Avenue, Suite 300
Miami, Florida 33178-2428
CERTIFICATE OF AUTHORIZATION NO. 8115
REGISTRATION # AA26000867

Approved Date 05-22-06

DATE TIME FILE

PASSENGER STATIONS

NW 119TH ST. STATION A-CROSS SECTION

Scale 1"=20' Drawing PST-24 Sheet 31

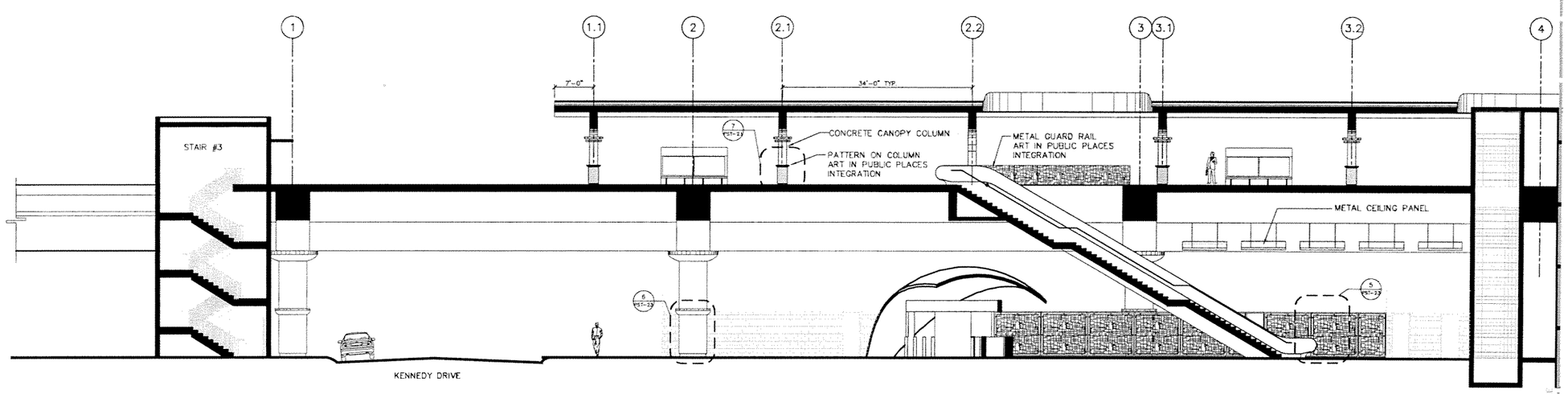

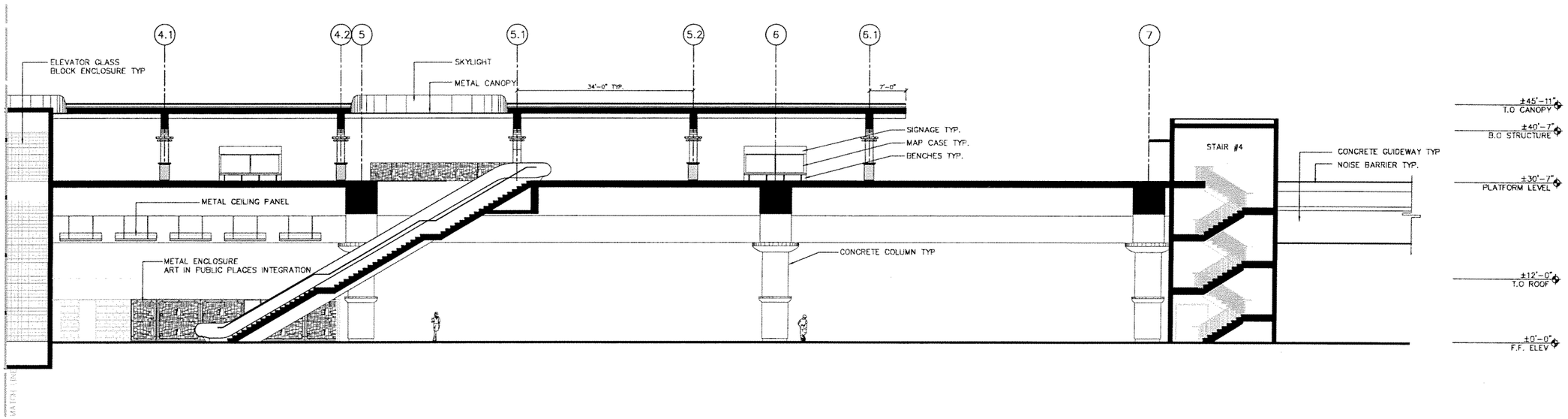

SECTION LOOKING WEST

0 5 10 20

SUBJECT TO CHANGE

Designed by ML 5/06	No.	Date	By / Chk	App.	Revisions
Drawn by DR 5/06	1	9/12/05			60% PROGRESS SET
Checked by ML 5/06	2	10/17/05			70% PROGRESS SET
Approved by Date	3	3/1/06			90% REVISED PROGRESS SET
	4	5/22/06			100% SUBMITTAL

NORTH CORRIDOR METRORAIL EXTENSION - PRELIMINARY ENGINEERING (100% SUBMITTAL)

MIAMI-DADE COUNTY — MIAMI-DADE TRANSIT

PARSONS
7600 CORPORATE CENTER DRIVE, SUITE 500
MIAMI, FLORIDA 33126
PHONE: (786) 464-1000 FAX: (786) 845-7119
CERTIFICATE OF AUTHORIZATION NO. 1838

Approved ____ Date ____

EARTHTECH
Transportation Services
architecture · engineering · construction
3730 NW 82th Avenue, Suite 305
Miami, Florida 33178-2430
CERTIFICATE OF AUTHORIZATION NO. 8115
REGISTRATION # AA26000687

Approved ____ Date 05-22-06

DATE TIME FILE

PASSENGER STATIONS

NW 119TH ST. STATION
B-LONGITUDINAL SECTION

Scale 1" = 20' | Drawing PST-25 | Sheet 32

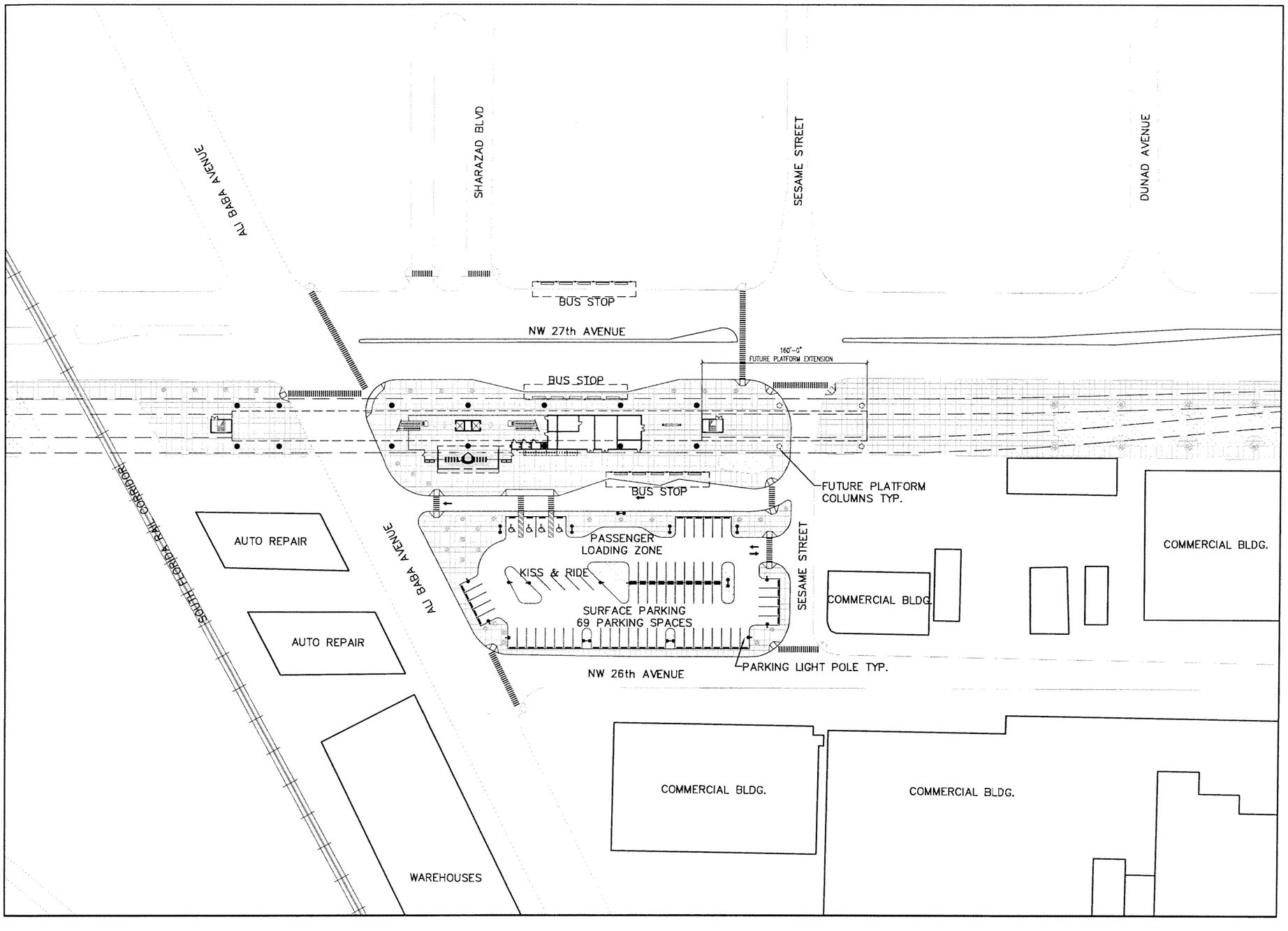

NOTE:

1. FOR GUIDEWAY COLUMN LOCATIONS OUTSIDE THE STATION LIMITS REFER TO GUIDEWAY STRUCTURE DRAWINGS.
2. ARCHITECTURAL SITEPLAN SHOWS CONFIGURATION OF GREEN AREAS ONLY, REFER TO LANDSCAPE DRAWINGS FOR DETAILS.
3. FINAL LOCATION FOR POWER SUBSTATION TO BE DETERMINED AFTER PRELIMINARY ENGINEERING PHASE.

0 25 50 100

SUBJECT TO CHANGE

No.	Date	By	Chk	App.	Revisions
1	04/22/05				60% PROGRESS SET
2	10/17/05				70% PROGRESS SET
3	3/10/06				90% REVISED PROGRESS SET
4	5/22/06				100% SUBMITTAL

Designed by ML 5/06 Date
Drawn by ER 5/06 Date
Checked by ML 5/06 Date
Approved by Date

NORTH CORRIDOR METRORAIL EXTENSION - PRELIMINARY ENGINEERING (100% SUBMITTAL)

MIAMI-DADE COUNTY
MIAMI-DADE TRANSIT

PARSONS
7600 CORPORATE CENTER DRIVE, SUITE 500
MIAMI, FLORIDA 33126
PHONE: (786) 464-1000 FAX: (786) 845-7119
CERTIFICATE OF AUTHORIZATION NO. 1836

Approved Date

EARTHTECH
Transportation Services
architecture · engineering · construction
3750 NW 87th Avenue, Suite 300
Miami, Florida 33178-2426
CERTIFICATE OF AUTHORIZATION NO. 8115
REGISTRATION # AA26000687

Approved Date 05-22-06

DATE TIME FILE

PASSENGER STATIONS

ALI BABA AVE. STATION SITE PLAN

Scale 1" = 100' Drawing PST-26 Sheet 33

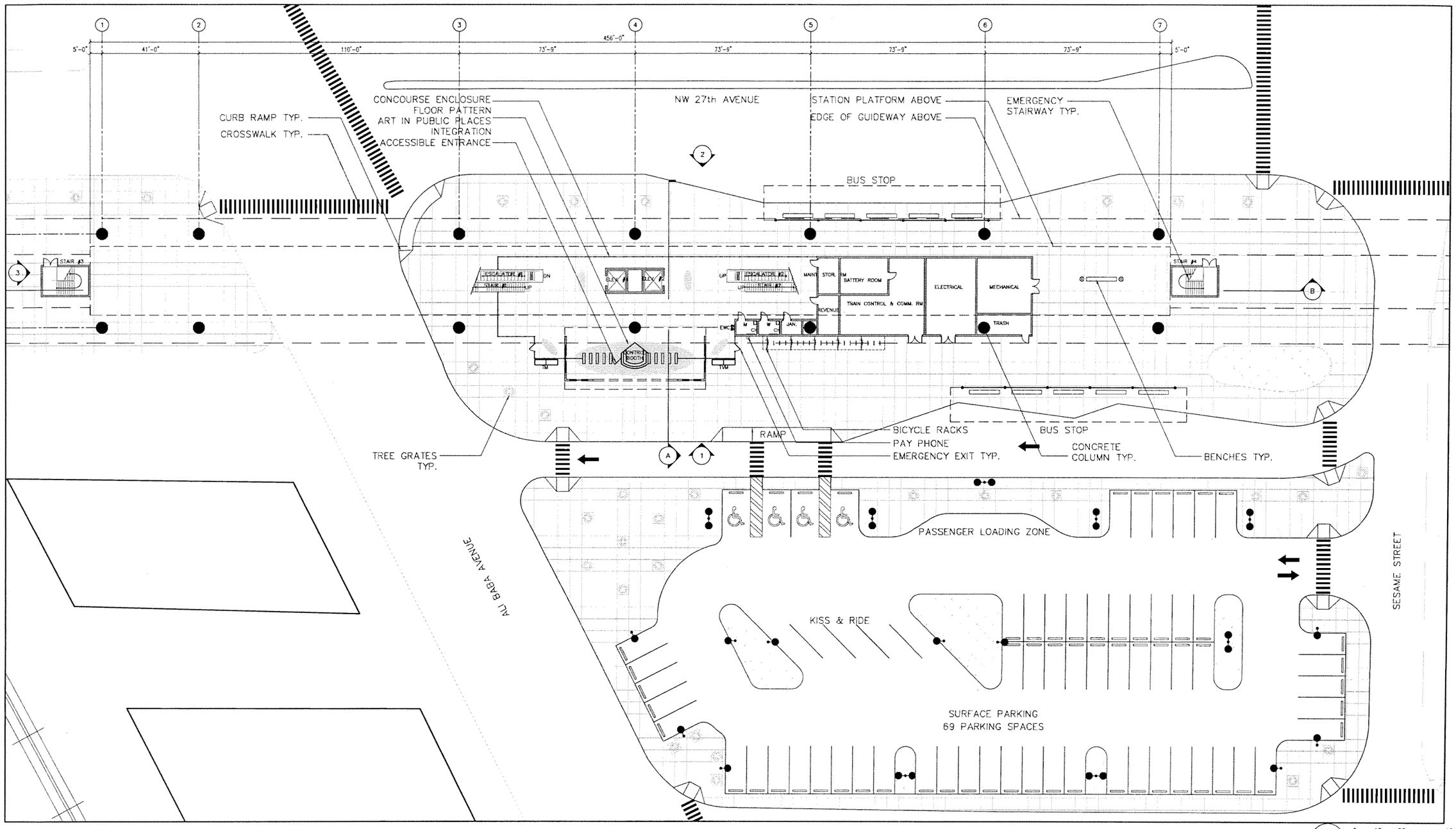

SUBJECT TO CHANGE

Designed by	Date	No.	Date	By / Chk	App.	Revisions
ML	5/06	1	5/02/05			60% PROGRESS SET
Drawn by ER	5/06	2	10/17/05			70% PROGRESS SET
		3	3/15/06			90% REVISED PROGRESS SET
Checked by ML	5/06	4	5/22/06			100% SUBMITTAL
Approved by	Date					

NORTH CORRIDOR METRORAIL EXTENSION - PRELIMINARY ENGINEERING (100% SUBMITTAL)

MIAMI-DADE COUNTY

MIAMI-DADE TRANSIT

PARSONS
7600 CORPORATE CENTER DRIVE, SUITE 500
MIAMI, FLORIDA 33126
PHONE: (786) 464-1000 FAX: (786) 845-7119
CERTIFICATE OF AUTHORIZATION NO. 1838

Approved | Date

EARTH TECH
Transportation Services
architecture · engineering · construction
3750 NW 87th Avenue, Suite 300
Miami, Florida 33178-2428
CERTIFICATE OF AUTHORIZATION NO. 8115
REGISTRATION # AA26000697

Approved | Date 05-22-06

DATE TIME FILE

PASSENGER STATIONS

ALI BABA AVE. STATION PLAZA LEVEL PLAN

Scale 1" = 40' | Drawing PST-27 | Sheet 34

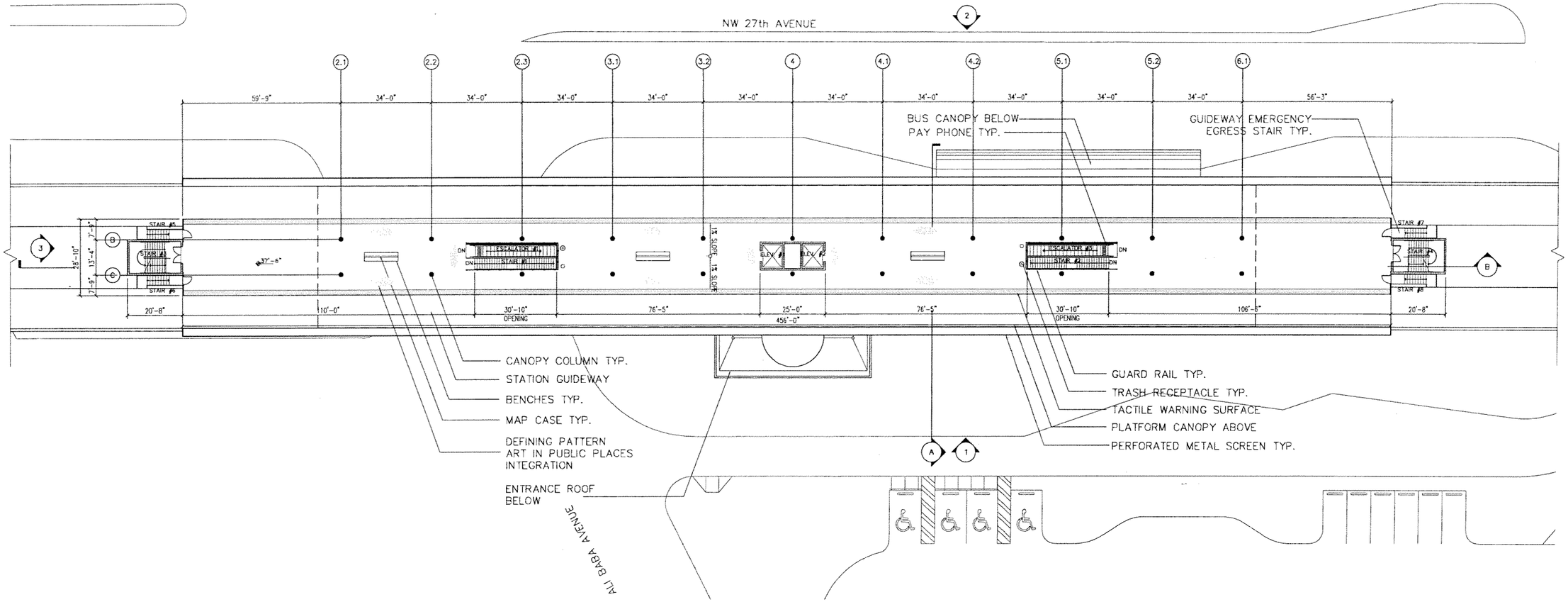

SUBJECT TO CHANGE

Designed by	Date	No.	Date	By / Chk	App.	Revisions
ML	5/06	1	5/02/05			60% PROGRESS SET
Drawn by ER	5/06	2	10/17/05			70% PROGRESS SET
Checked by ML	5/06	3	3/15/06			90% REVISED PROGRESS SET
Approved by	Date	4	5/22/06			100% SUBMITTAL

NORTH CORRIDOR METRORAIL EXTENSION - PRELIMINARY ENGINEERING (100% SUBMITTAL)

MIAMI-DADE COUNTY

MIAMI-DADE TRANSIT

PARSONS
7600 CORPORATE CENTER DRIVE, SUITE 500
MIAMI, FLORIDA 33126
PHONE: (786) 464-1000 FAX: (786) 845-7119
CERTIFICATE OF AUTHORIZATION NO. 1838

Approved | Date

EARTHTECH
Transportation Services
architecture · engineering · construction
3750 NW 87th Avenue, Suite 300
Miami, Florida 33178-2430
CERTIFICATE OF AUTHORIZATION NO. 8115
REGISTRATION # AA26000697

Approved | Date 05-22-06

DATE | TIME | FILE

PASSENGER STATIONS

ALI BABA AVE. STATION PLATFORM PLAN

Scale 1"=40' | Drawing PST-28 | Sheet 35

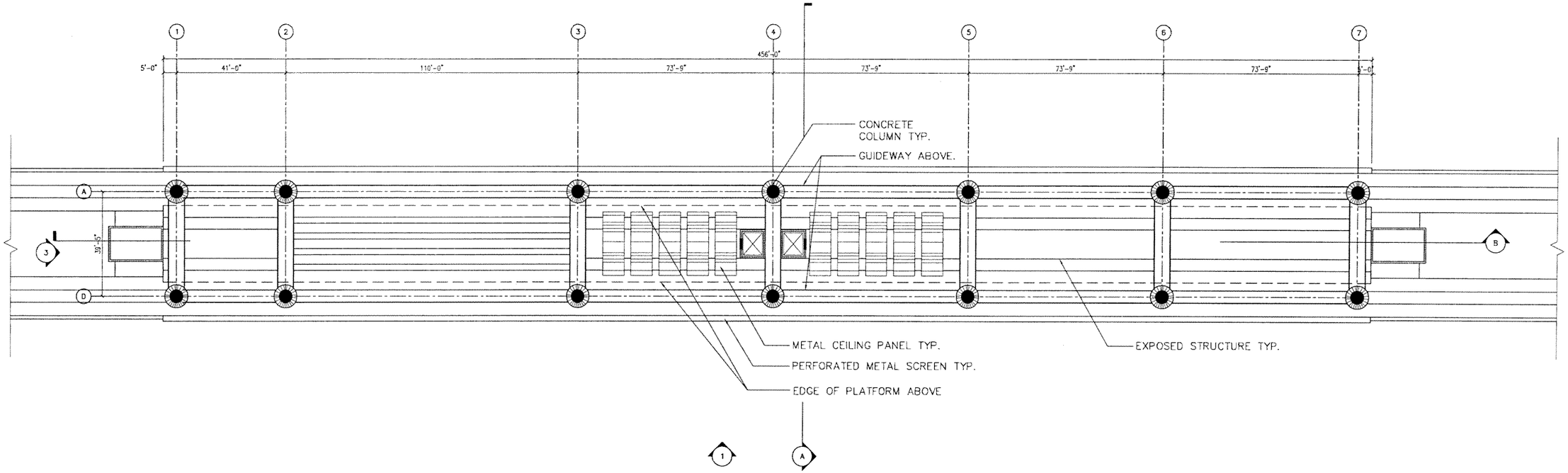

0 10 20 40

SUBJECT TO CHANGE

Designed by ML 5/06	1	8/02/05			60% PROGRESS SET
Drawn by ER 5/06	2	10/17/05			70% PROGRESS SET
Checked by ML 5/06	3	3/16/06			90% REVISED PROGRESS SET
	4	5/22/06			100% SUBMITTAL
Approved by Date	No.	Date	By / Chk	App.	Revisions

NORTH CORRIDOR METRORAIL EXTENSION - PRELIMINARY ENGINEERING (100% SUBMITTAL)

MIAMI-DADE COUNTY

MIAMI-DADE TRANSIT

PARSONS
7600 CORPORATE CENTER DRIVE, SUITE 500
MIAMI, FLORIDA 33126
PHONE: (786) 464-1000 FAX: (786) 845-7115
CERTIFICATE OF AUTHORIZATION NO. 1838

Approved | Date

EARTHTECH
Transportation Services
architecture · engineering · construction
3750 NW 87th Avenue, Suite 300
Miami, Florida 33178-2400
CERTIFICATE OF AUTHORIZATION NO. 8115
REGISTRATION # AA26000697

Approved | Date 05-22-06

DATE TIME FILE

PASSENGER STATIONS

ALI BABA AVE. STATION REFLECTED CEILING PLAN

Scale 1"=40' | Drawing PST-29 | Sheet 36

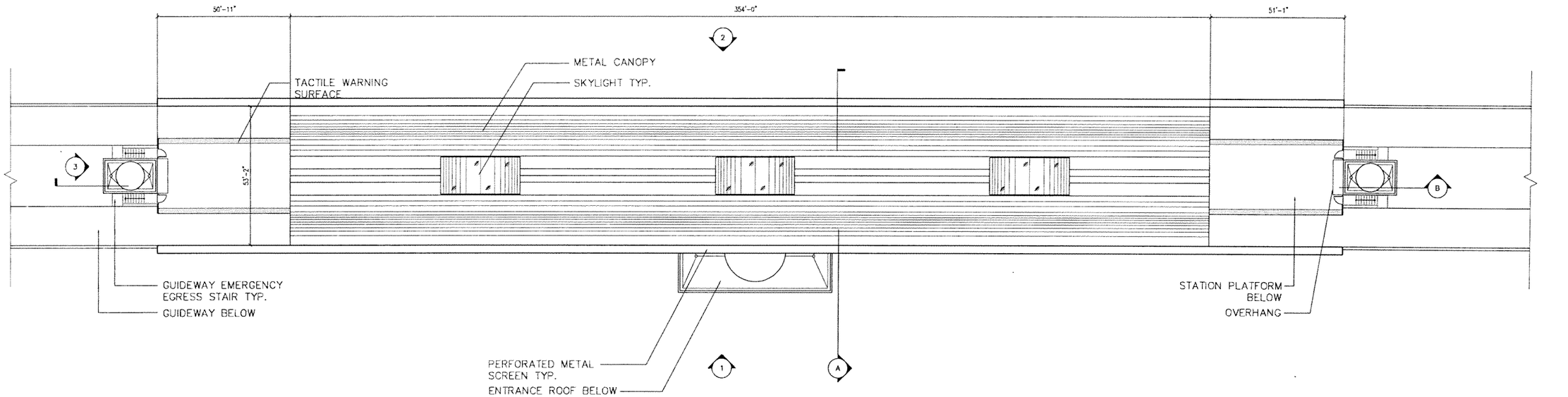

0 10 20 40

SUBJECT TO CHANGE

No.	Date	By	Chk	App.	Revisions
1	5/2/05				60% PROGRESS SET
2	10/17/05				70% PROGRESS SET
3	3/10/06				90% REVISED PROGRESS SET
4	5/22/06				100% SUBMITTAL

Designed by ML 5/06 Date
Drawn by ER 5/06 Date
Checked by ML 5/06 Date
Approved by Date

NORTH CORRIDOR METRORAIL EXTENSION - PRELIMINARY ENGINEERING (100% SUBMITTAL)

MIAMI-DADE COUNTY
MIAMI-DADE TRANSIT

PARSONS
7600 CORPORATE CENTER DRIVE, SUITE 500
MIAMI, FLORIDA 33126
PHONE: (786) 464-1000 FAX: (786) 845-7119
CERTIFICATE OF AUTHORIZATION NO. 1838

Approved Date

EARTHTECH
Transportation Services
architecture · engineering · construction
3750 NW 87th Avenue, Suite 300
Miami, Florida 33178-2428
CERTIFICATE OF AUTHORIZATION NO. 8116
REGISTRATION # AA26002661

Approved Date 05-22-06

DATE TIME FILE

PASSENGER STATIONS

ALI BABA AVE. STATION ROOF PLAN

Scale 1"=40' Drawing PST-30 Sheet 37

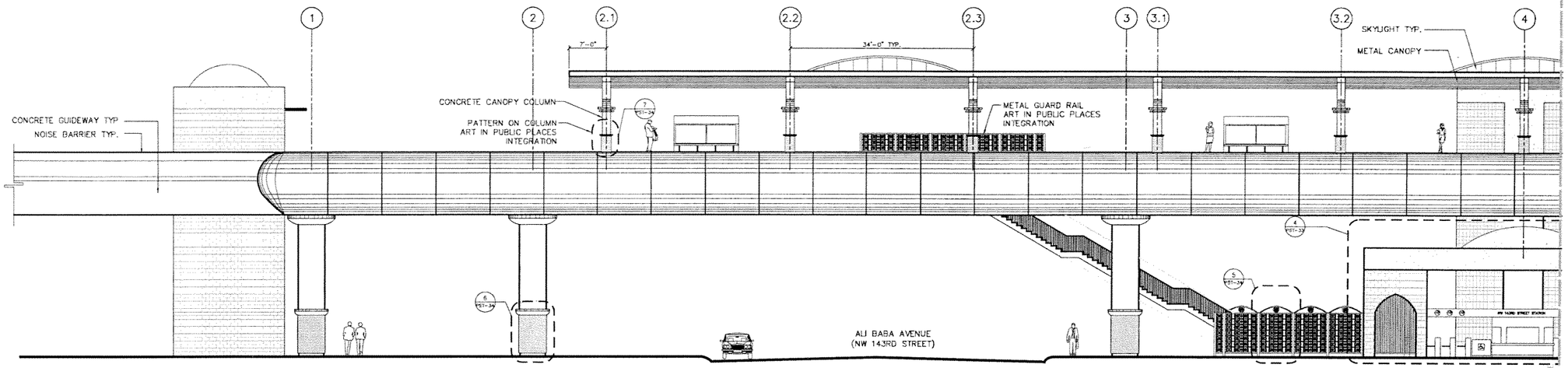

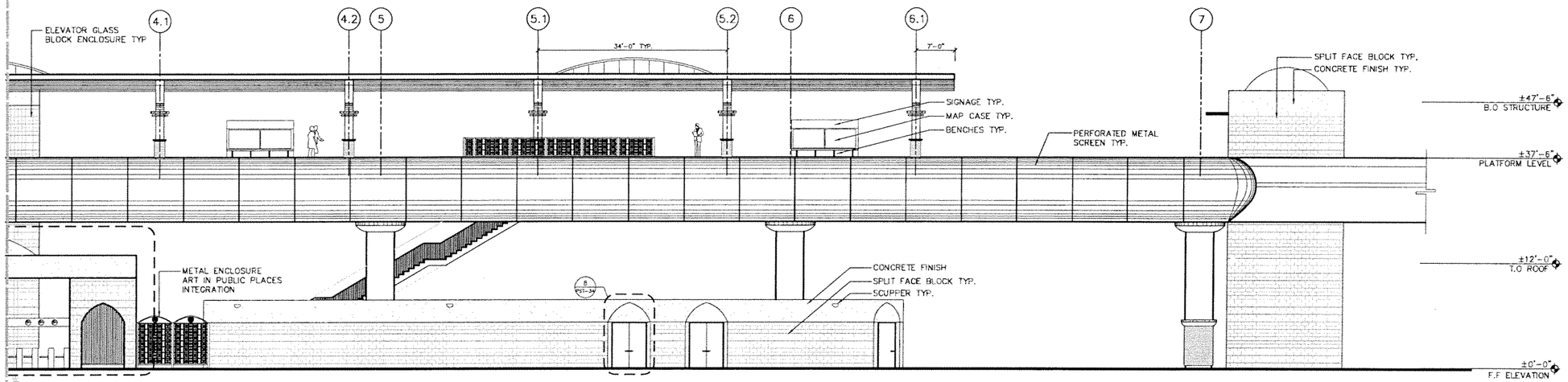

0 5 10 20

SUBJECT TO CHANGE

Designed by ML 5/06 Date	1	9/22/05			60% PROGRESS SET
Drawn by ER 5/06 Date	2	10/17/05			70% PROGRESS SET
Checked by ML 5/06 Date	3	3/10/06			90% REVISED PROGRESS SET
	4	5/22/06			100% SUBMITTAL
Approved by Date	No.	Date	By / Chk	App.	Revisions

NORTH CORRIDOR METRORAIL EXTENSION - PRELIMINARY ENGINEERING (100% SUBMITTAL)

MIAMI-DADE COUNTY

MIAMI-DADE TRANSIT

PARSONS
7600 CORPORATE CENTER DRIVE, SUITE 500
MIAMI, FLORIDA 33126
PHONE: (786) 464-1000 FAX: (786) 845-7119
CERTIFICATE OF AUTHORIZATION NO. 1838

Approved Date

EARTHTECH
Transportation Services
architecture · engineering · construction
3750 NW 87th Avenue, Suite 300
Miami, Florida 33178-2430
CERTIFICATE OF AUTHORIZATION NO. 8115
REGISTRATION # AA26000687

Approved Date 05-22-06

DATE TIME F.D.T.

PASSENGER STATIONS

ALI BABA AVE. STATION 1-EAST ELEVATIONS

Scale 1" = 20' Drawing PST-31 Sheet 38

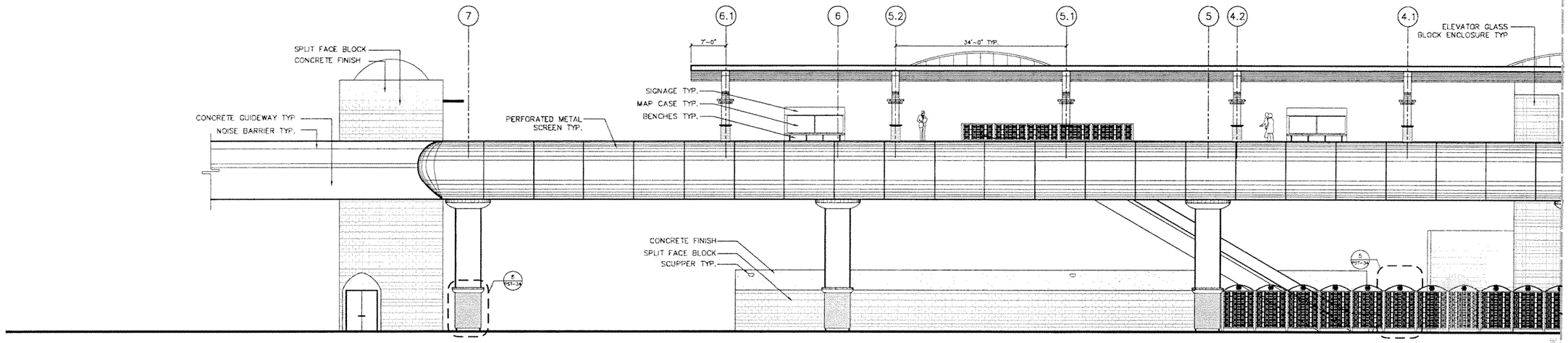

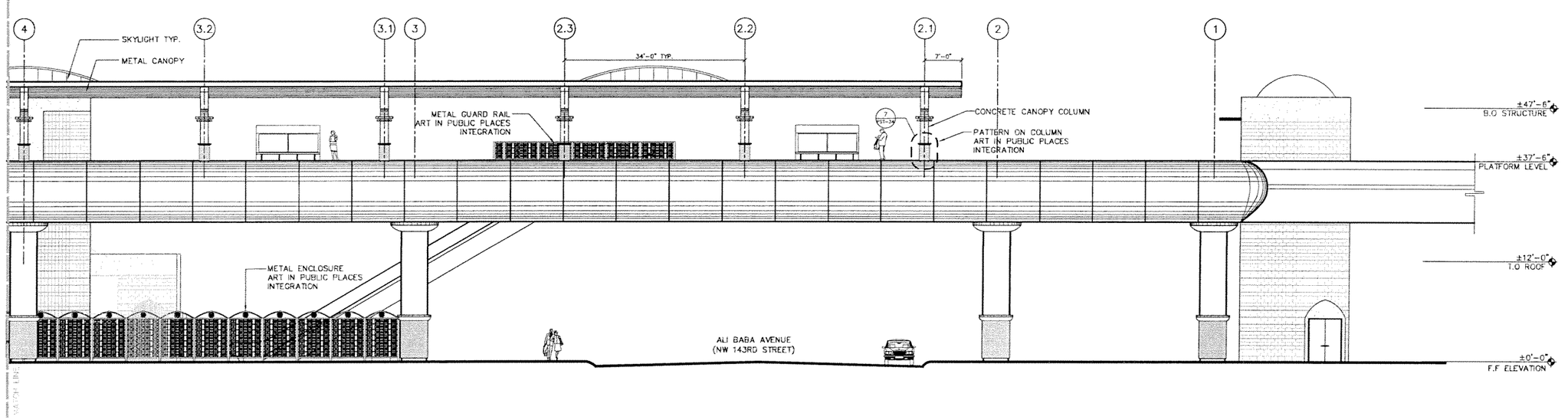

0 5 10 20

SUBJECT TO CHANGE

Designed by ML 5/06 Date	1	9/02/05			60% PROGRESS SET
Drawn by ER 5/06 Date	2	10/17/05			70% PROGRESS SET
Checked by ML 5/06 Date	3	3/10/06			90% REVISED PROGRESS SET
	4	5/22/06			100% SUBMITTAL
Approved by Date	No.	Date	By / Chk	App.	Revisions

NORTH CORRIDOR METRORAIL EXTENSION - PRELIMINARY ENGINEERING (100% SUBMITTAL)

MIAMI-DADE COUNTY — MIAMI-DADE TRANSIT

PARSONS
7600 CORPORATE CENTER DRIVE, SUITE 500
MIAMI, FLORIDA 33126
PHONE: (786) 464-1000 FAX: (786) 845-7119
CERTIFICATE OF AUTHORIZATION NO. 1638
Approved | Date

EARTH TECH
Transportation Services
architecture · engineering · construction
3750 NW 87th Avenue, Suite 300
Miami, Florida 33178-2430
CERTIFICATE OF AUTHORIZATION NO. 8115
REGISTRATION # AA26000087
Approved | Date 05-22-06

DATE TIME CLT

PASSENGER STATIONS

ALI BABA AVE. STATION 2-WEST ELEVATIONS

Scale 1"=20' | Drawing PST-32 | Sheet 39

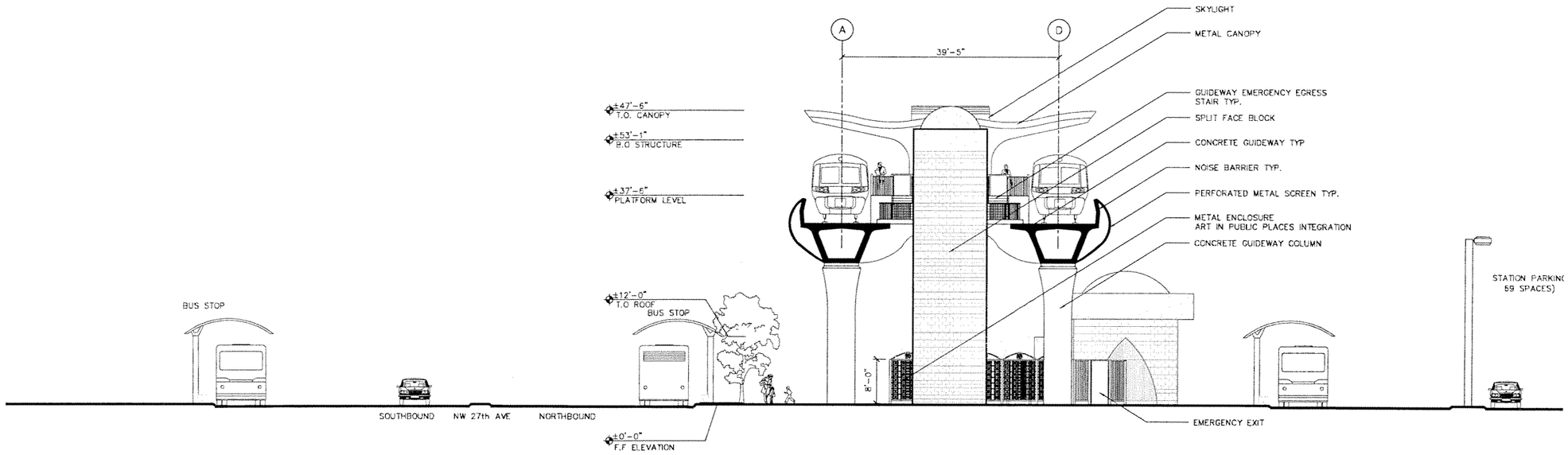

3- SOUTH ELEVATION

0 5 10 20

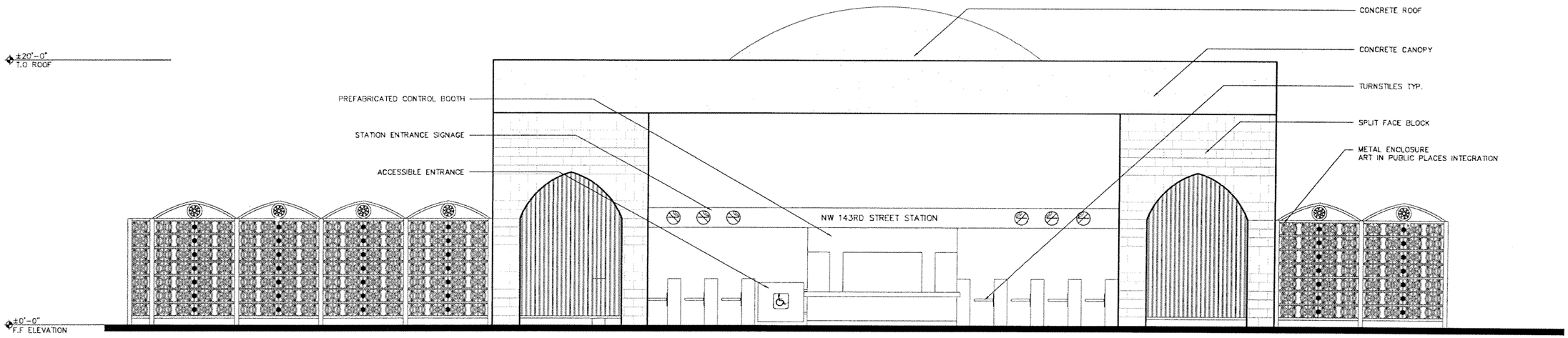

4-ENTRANCE CANOPY ELEVATION

0 2' 4' 8'

SUBJECT TO CHANGE

Designed by ML 5/06 Date	1	5/02/05			60% PROGRESS SET
Drawn by ER 5/06 Date	2	10/17/05			70% PROGRESS SET
Checked by ML 5/06 Date	3	3/10/06			90% REVISED PROGRESS SET
Approved by Date	4	5/22/06			100% SUBMITTAL
	No.	Date	By / Chk	App.	Revisions

NORTH CORRIDOR METRORAIL EXTENSION - PRELIMINARY ENGINEERING (100% SUBMITTAL)

MIAMI-DADE COUNTY — MIAMI-DADE TRANSIT

PARSONS
7600 CORPORATE CENTER DRIVE, SUITE 500
MIAMI, FLORIDA 33126
PHONE: (786) 464-1000 FAX: (786) 845-7119
CERTIFICATE OF AUTHORIZATION NO. 1836

Approved — Date

EARTHTECH
Transportation Services
architecture · engineering · construction
3750 NW 87th Avenue, Suite 300
Miami, Florida 33178-2428
CERTIFICATE OF AUTHORIZATION NO.: 8116
REGISTRATION # AA26000687

Approved — Date 05-22-06

DATE TIME FILE

PASSENGER STATIONS

ALI BABA AVE. STATION ELEVATIONS

Scale NTS | Drawing PST-33 | Sheet 40

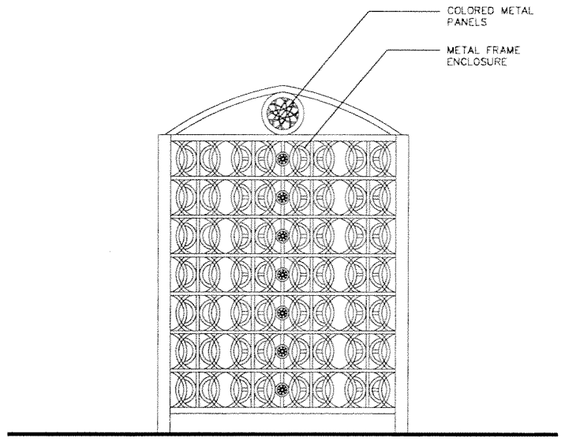

5-STATION DEFINING IMAGE ON CONCOURSE & ESCALATOR ENCLOSURE

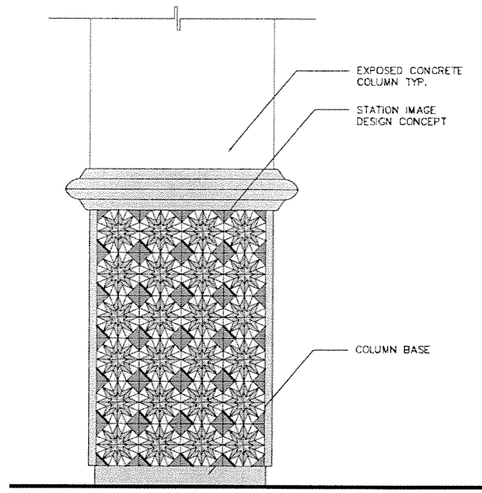

6-STATION DEFINING IMAGE ON STATION/GUIDEWAY SUPPORT COLUMNS

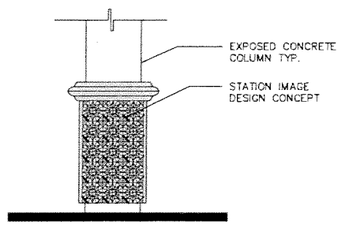

7-STATION DEFINING IMAGE ON STATION COLUMNS

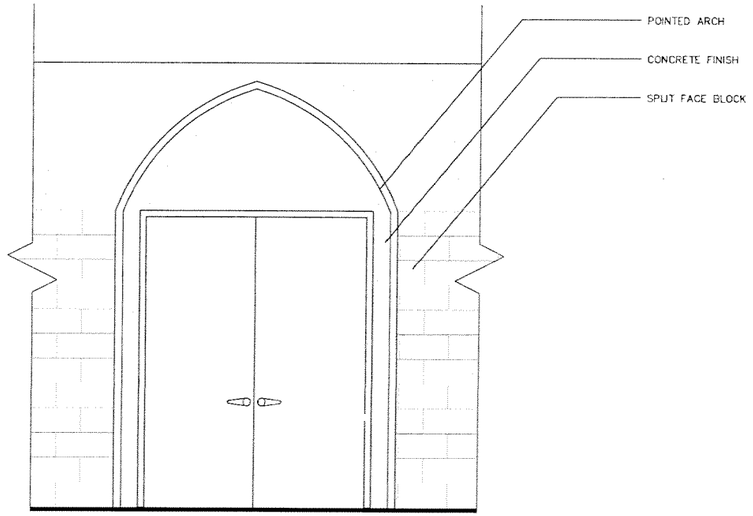

8-STATION DEFINING IMAGE ON WALL

NOTE: FINAL DESIGN ON COLUMN AND ENCLOSURE TO BE DETERMINED DURING FINAL DESIGN PHASE

SUBJECT TO CHANGE

Designed by ML 5/06 Date	No.	Date	By / Chk	App.	Revisions
Drawn by ER 5/06 Date	1	9/02/05			60% PROGRESS SET
Checked by ML 5/06 Date	2	10/17/05			70% PROGRESS SET
Approved by Date	3	3/10/06			90% REVISED PROGRESS SET
	4	5/22/06			100% SUBMITTAL

NORTH CORRIDOR METRORAIL EXTENSION - PRELIMINARY ENGINEERING (100% SUBMITTAL)

MIAMI-DADE COUNTY — MIAMI-DADE TRANSIT

PARSONS
7600 CORPORATE CENTER DRIVE, SUITE 500
MIAMI, FLORIDA 33126
PHONE: (786) 464-1000 FAX: (786) 845-7119
CERTIFICATE OF AUTHORIZATION NO. 1838

Approved ____ Date ____

EARTHTECH
Transportation Services
architecture · engineering · construction
3760 NW 87th Avenue, Suite 300
Miami, Florida 33178-2435
CERTIFICATE OF AUTHORIZATION NO. 8116
REGISTRATION # AA26002697

Approved ____ Date 05-22-06

DATE TIME FILE

PASSENGER STATIONS

ALI BABA AVE. STATION ELEVATIONS

Scale NTS | Drawing PST-34 | Sheet 41

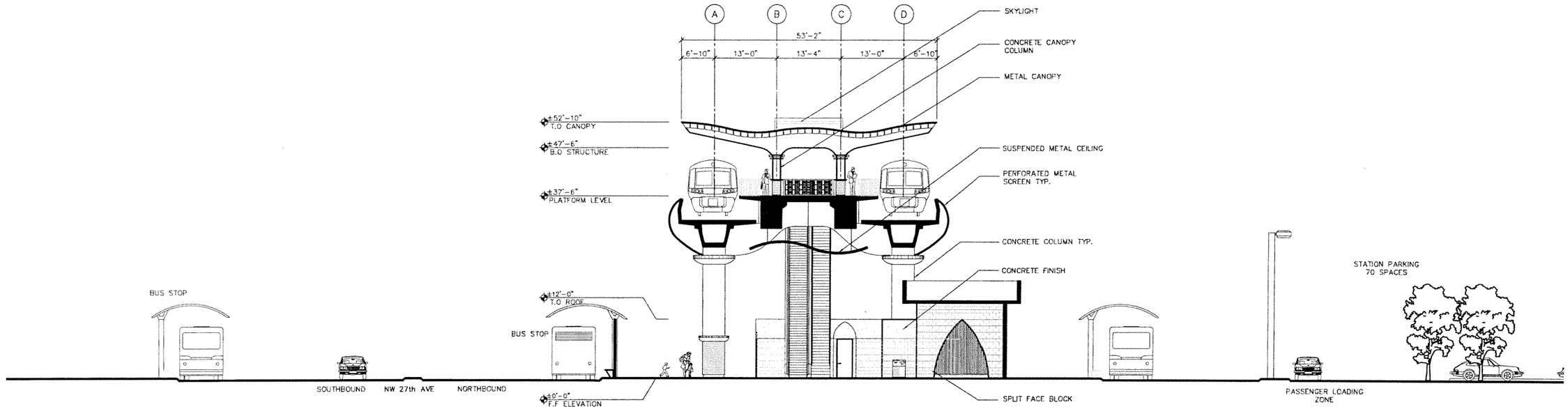

SECTION LOOKING NORTH

0 5 10 20

SUBJECT TO CHANGE

Designed by ML 5/06 Date	1	9/02/05			60% PROGRESS SET
	2	10/17/05			70% PROGRESS SET
Drawn by ER 5/06 Date	3	3/10/06			90% REVISED PROGRESS SET
	4	5/22/06			100% SUBMITTAL
Checked by ML 5/06 Date					
Approved by Date	No.	Date	By / Chk	App.	Revisions

NORTH CORRIDOR METRORAIL EXTENSION - PRELIMINARY ENGINEERING (100% SUBMITTAL)

MIAMI-DADE COUNTY

MIAMI-DADE TRANSIT

PARSONS
7600 CORPORATE CENTER DRIVE, SUITE 500
MIAMI, FLORIDA 33126
PHONE: (786) 464-1000 FAX: (786) 845-7119
CERTIFICATE OF AUTHORIZATION NO. 1838

Approved Date

EARTH TECH
Transportation Services
architecture · engineering · construction
3750 NW 87th Avenue, Suite 300
Miami, Florida 33178-2436
CERTIFICATE OF AUTHORIZATION NO.: 8115
REGISTRATION # AA26000667

Approved Date 05-22-06

DATE TIME FILE

PASSENGER STATIONS

ALI BABA AVE. A-CROSS SECTION

Scale 1" = 20' Drawing PST-35 Sheet 42

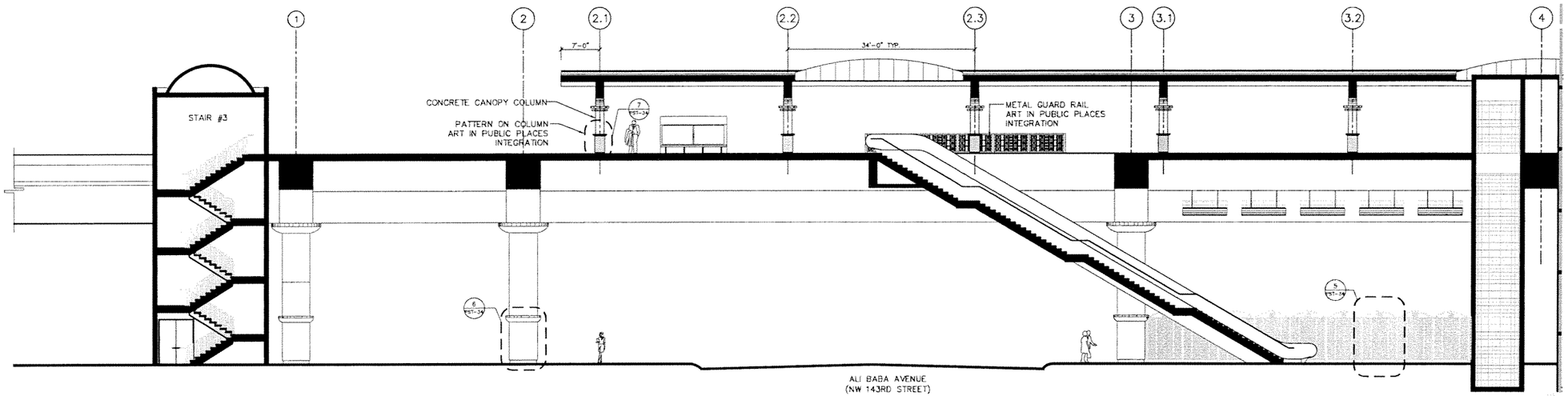

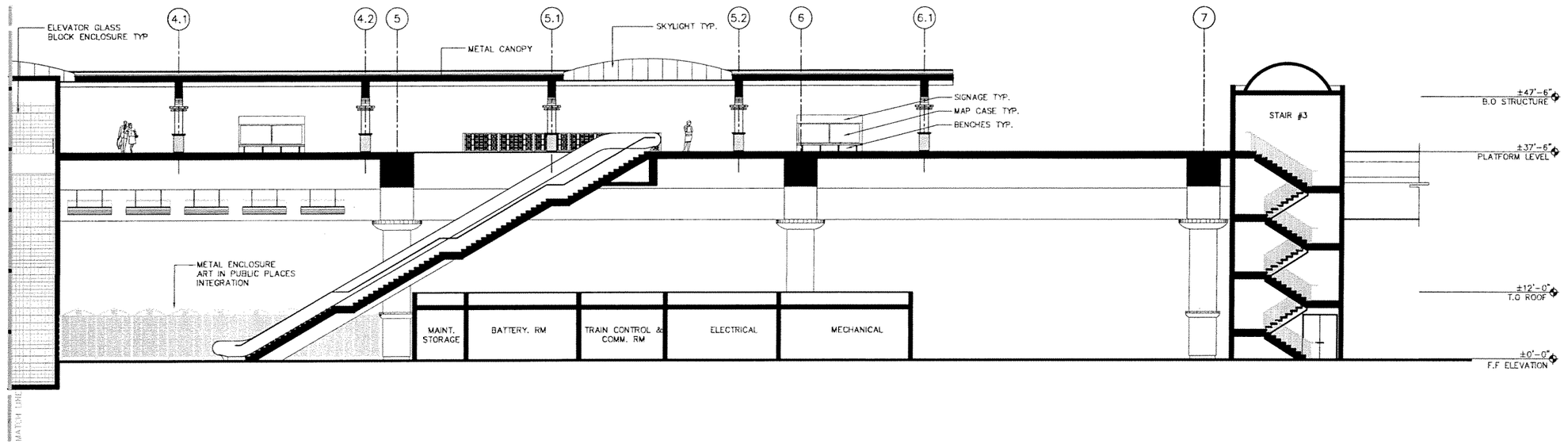

SECTION LOOKING WEST

0 5 10 20

SUBJECT TO CHANGE

Designed by ML 5/1/06	1	9/02/05			60% PROGRESS SET
Drawn by ER 5/1/06	2	10/17/05			70% PROGRESS SET
Checked by ML 5/1/06	3	3/10/06			90% REVISED PROGRESS SET
	4	5/22/06			100% SUBMITTAL
Approved by / Date	No.	Date	By / Chk	App.	Revisions

NORTH CORRIDOR METRORAIL EXTENSION - PRELIMINARY ENGINEERING (100% SUBMITTAL)

MIAMI-DADE COUNTY — MIAMI-DADE TRANSIT

PARSONS
7600 CORPORATE CENTER DRIVE, SUITE 500
MIAMI, FLORIDA 33126
PHONE: (786) 464-1000 FAX: (786) 845-7119
CERTIFICATE OF AUTHORIZATION NO. 1838

Approved / Date

EARTHTECH
Transportation Services
architecture · engineering · construction
3750 NW 87th Avenue, Suite 300
Miami, Florida 33178-2430
CERTIFICATE OF AUTHORIZATION NO. 8115
REGISTRATION # AA0000867

Approved / Date 05-22-06

DATE TIME FILE

PASSENGER STATIONS

ALI BABA AVE.
B-LONGITUDINAL SECTION

Scale 1" = 20' | Drawing PST-36 | Sheet 43

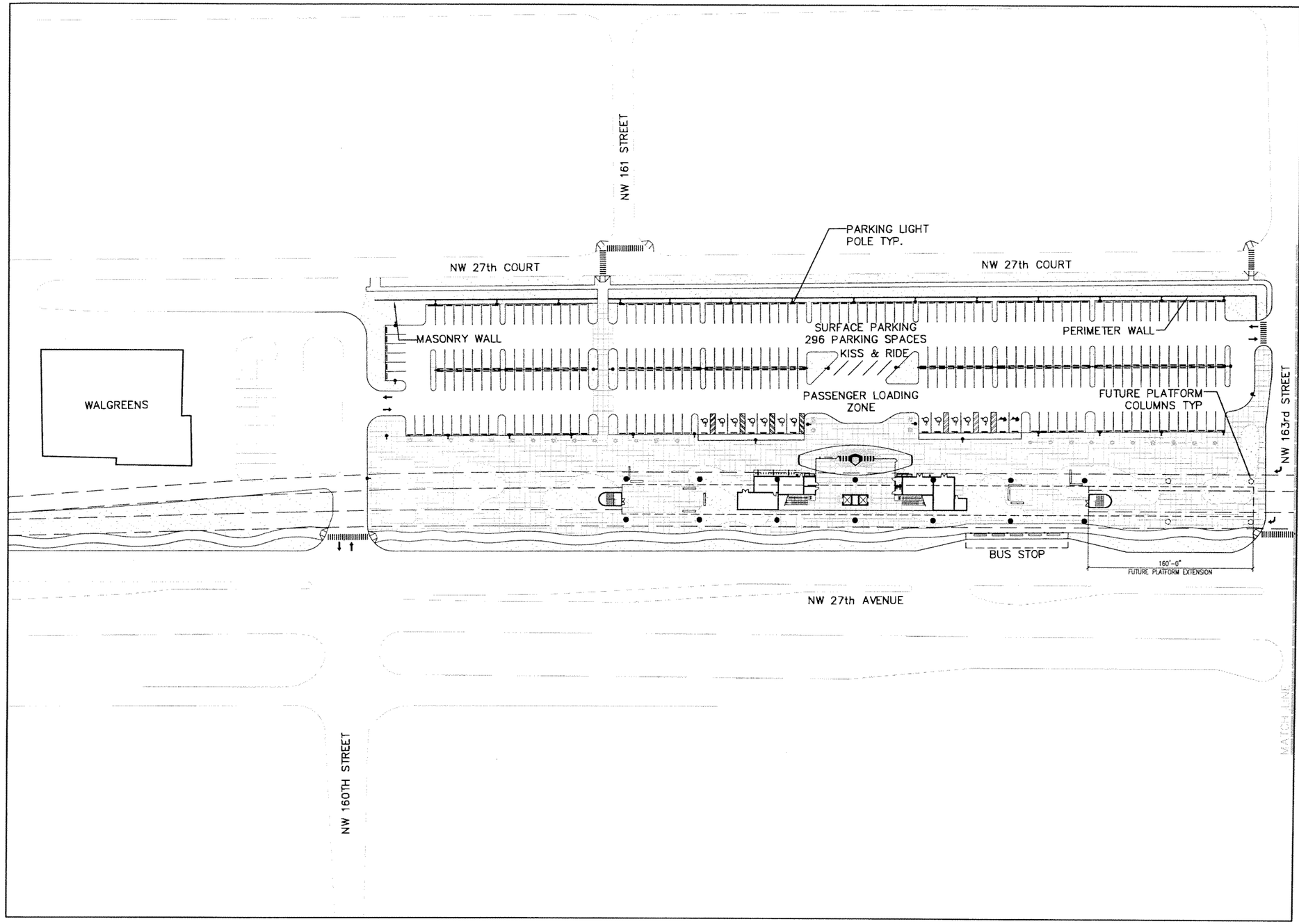

NOTE:

1. FOR GUIDEWAY COLUMN LOCATIONS OUTSIDE THE STATION LIMITS REFER TO GUIDEWAY STRUCTURE DRAWINGS.
2. ARCHITECTURAL SITEPLAN SHOWS CONFIGURATION OF GREEN AREAS ONLY, REFER TO LANDSCAPE DRAWINGS FOR DETAILS.
3. FINAL LOCATION FOR POWER SUBSTATION TO BE DETERMINED AFTER PRELIMINARY ENGINEERING PHASE.

0 25 50 100

SUBJECT TO CHANGE

Designed by ML 5/06 Date
Drawn by JB 5/06 Date
Checked by ML 5/06 Date
Approved by Date

No.	Date	By / Chk	App.	Revisions
1	9/02/05			60% PROGRESS SET
2	10/17/05			70% PROGRESS SET
3	3/1/06			90% REVISED PROGRESS SET
4	5/22/06			100% SUBMITTAL

NORTH CORRIDOR METRORAIL EXTENSION - PRELIMINARY ENGINEERING (100% SUBMITTAL)

MIAMI-DADE COUNTY

MIAMI-DADE TRANSIT

PARSONS
7600 CORPORATE CENTER DRIVE, SUITE 500
MIAMI, FLORIDA 33126
PHONE: (786) 464-1000 FAX: (786) 845-7119
CERTIFICATE OF AUTHORIZATION NO. 1836

Approved Date

EARTHTECH
Transportation Services
architecture · engineering · construction
3750 NW 87th Avenue, Suite 300
Miami, Florida 33178-2428
CERTIFICATE OF AUTHORIZATION NO. 8115
REGISTRATION # AA26000587

Approved Date 05-22-06

DATE TIME FILE

PASSENGER STATIONS

NW 163RD ST. STATION SITE PLAN

Scale 1" = 100' Drawing PST-37A Sheet 44

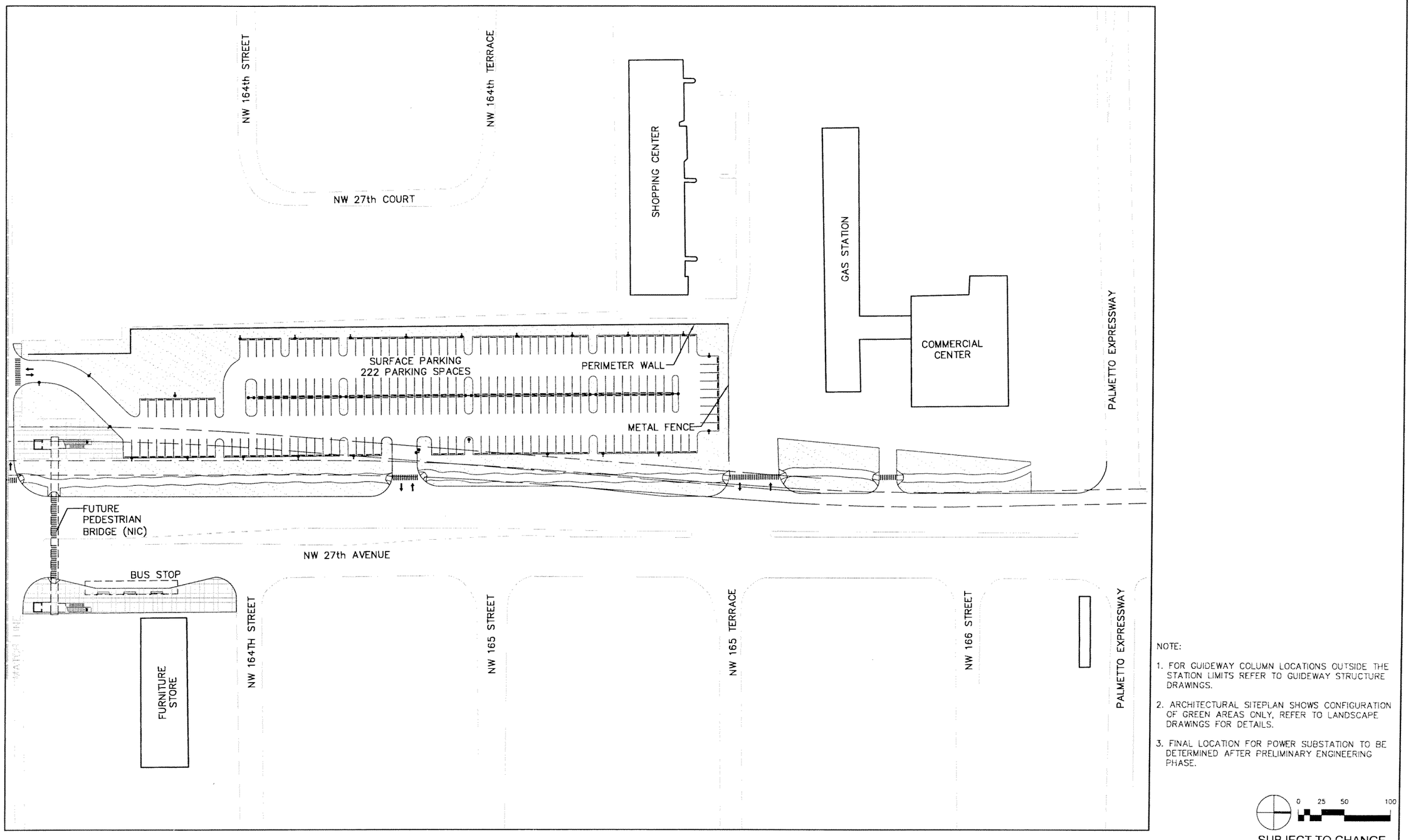

NOTE:

1. FOR GUIDEWAY COLUMN LOCATIONS OUTSIDE THE STATION LIMITS REFER TO GUIDEWAY STRUCTURE DRAWINGS.
2. ARCHITECTURAL SITEPLAN SHOWS CONFIGURATION OF GREEN AREAS ONLY, REFER TO LANDSCAPE DRAWINGS FOR DETAILS.
3. FINAL LOCATION FOR POWER SUBSTATION TO BE DETERMINED AFTER PRELIMINARY ENGINEERING PHASE.

0 25 50 100

SUBJECT TO CHANGE

Designed by ML 5/06	1	9/02/05			60% PROGRESS SET
Drawn by JB 5/06	2	10/17/05			70% PROGRESS SET
Checked by ML 5/06	3	3/10/06			90% REVISED PROGRESS SET
	4	5/22/06			100% SUBMITTAL
Approved by Date	No.	Date	By Chk	App.	Revisions

NORTH CORRIDOR METRORAIL EXTENSION - PRELIMINARY ENGINEERING (100% SUBMITTAL)

MIAMI-DADE COUNTY — MIAMI-DADE TRANSIT

PARSONS
7600 CORPORATE CENTER DRIVE, SUITE 500
MIAMI, FLORIDA 33126
PHONE: (786) 464-1000 FAX: (786) 845-7119
CERTIFICATE OF AUTHORIZATION NO. 1838

Approved | Date

EARTHTECH
Transportation Services
architecture · engineering · construction
3750 NW 87th Avenue, Suite 300
Miami, Florida 33178-2428
CERTIFICATE OF AUTHORIZATION NO. 8115
REGISTRATION # AA26000687

Approved | Date 05-22-06

DATE TIME FILE

PASSENGER STATIONS

NW 163RD ST. STATION SITE PLAN-cont'd

Scale 1"=100' | Drawing PST-37B | Sheet 45

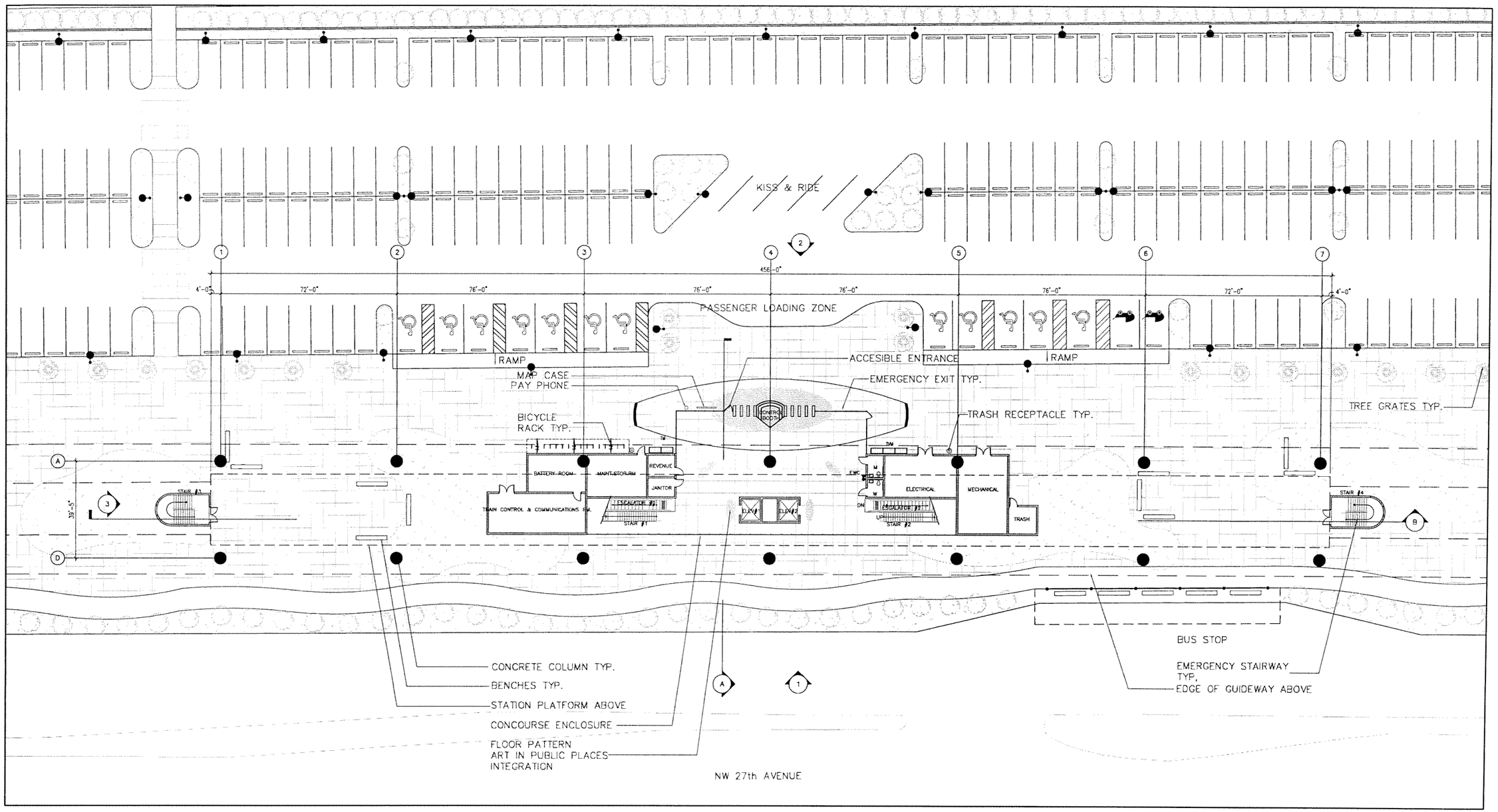

0 10 20 40

SUBJECT TO CHANGE

Designed by ML 5/06 Date	1	9/6/2005			60% PROGRESS SET
	2	10/17/05			70% PROGRESS SET
Drawn by JB 5/06 Date	3	3/10/06			90% REVISED PROGRESS SET
	4	5/22/06			100% SUBMITTAL
Checked by ML 5/06 Date					
Approved by Date	No.	Date	By / Chk	App.	Revisions

NORTH CORRIDOR METRORAIL EXTENSION - PRELIMINARY ENGINEERING (100% SUBMITTAL)

MIAMI-DADE COUNTY

MIAMI-DADE TRANSIT

PARSONS
7600 CORPORATE CENTER DRIVE, SUITE 500
MIAMI, FLORIDA 33126
PHONE: (786) 464-1000 FAX: (786) 845-7119
CERTIFICATE OF AUTHORIZATION NO. 1638

Approved Date

EARTHTECH
Transportation Services
architecture · engineering · construction
3750 NW 87th Avenue, Suite 300
Miami, Florida 33178-2008
CERTIFICATE OF AUTHORIZATION NO. 8115
REGISTRATION # AA26000097

Approved Date 05-22-06

DATE TIME FILE

PASSENGER STATIONS

NW 163RD ST. STATION PLAZA LEVEL PLAN

Scale 1" = 40' Drawing PST-38 Sheet 46

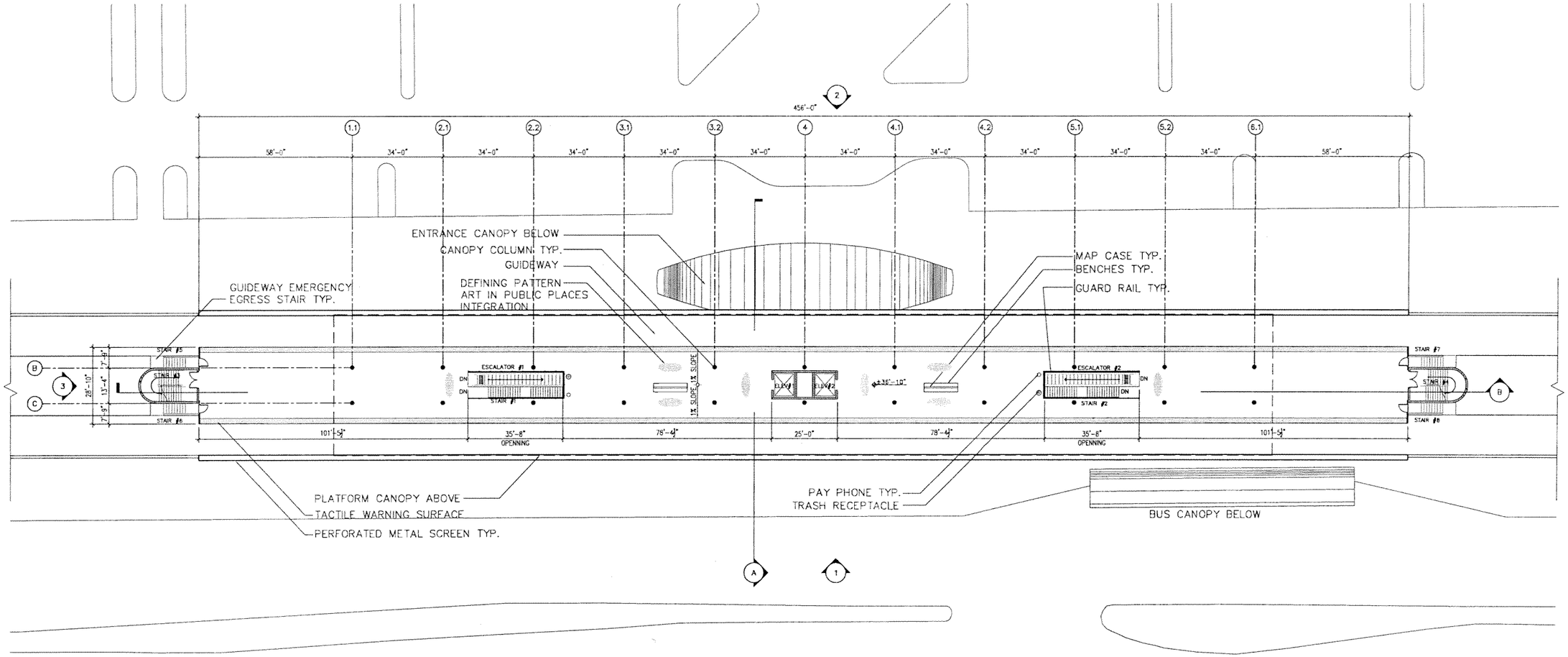

Designed by ML 5/06	1	5/02/05			60% PROGRESS SET
Drawn by JB 5/06	2	10/17/05			70% PROGRESS SET
Checked by ML 5/06	3	3/10/06			90% REVISED PROGRESS SET
Approved by	4	5/22/06			100% SUBMITTAL

NORTH CORRIDOR METRORAIL EXTENSION - PRELIMINARY ENGINEERING (100% SUBMITTAL)

MIAMI-DADE COUNTY

MIAMI-DADE TRANSIT

PARSONS
7900 CORPORATE CENTER DRIVE, SUITE 500
MIAMI, FLORIDA 33126
PHONE: (786) 464-1000 FAX: (786) 845-7119
CERTIFICATE OF AUTHORIZATION NO. 1838

EARTHTECH
Transportation Services
architecture · engineering · construction
3750 NW 87th Avenue, Suite 300
Miami, Florida 33178-2430
CERTIFICATE OF AUTHORIZATION NO. 4115
REGISTRATION # AA26000697

Approved | Date | Approved | Date 05-22-06

DATE TIME FILE

PASSENGER STATIONS

NW 163RD ST. STATION PLATFORM PLAN

Scale 1" = 40' | Drawing PST-39 | Sheet 47

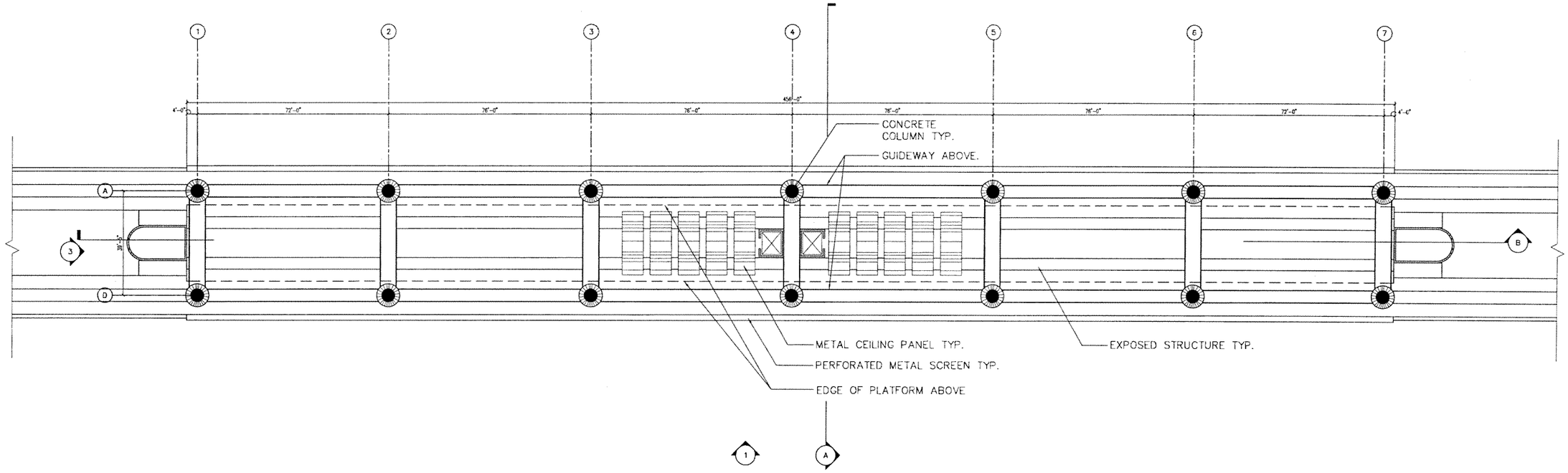

0 10 20 40

SUBJECT TO CHANGE

Designed by ML 5/06	No.	Date	By / Chk.	App.	Revisions
Drawn by JB 5/06	1	9/02/05			60% PROGRESS SET
Checked by ML 5/06	2	10/17/05			70% PROGRESS SET
Approved by Date	3	3/10/06			90% REVISED PROGRESS SET
	4	5/22/06			100% SUBMITTAL

NORTH CORRIDOR METRORAIL EXTENSION - PRELIMINARY ENGINEERING (100% SUBMITTAL)

MIAMI-DADE COUNTY

MIAMI-DADE TRANSIT

PARSONS
7600 CORPORATE CENTER DRIVE, SUITE 500
MIAMI, FLORIDA 33126
PHONE: (786) 464-1000 FAX: (786) 845-7119
CERTIFICATE OF AUTHORIZATION NO. 1838

Approved Date

EARTHTECH
Transportation Services
architecture · engineering · construction
3750 NW 87th Avenue, Suite 300
Miami, Florida 33178-2430
CERTIFICATE OF AUTHORIZATION NO. 8115
REGISTRATION # AA26000987

Approved Date 05-22-06

DATE TIME FILE

PASSENGER STATIONS

NW 163RD ST. STATION REFLECTED CEILING PLAN

Scale 1" = 40' Drawing PST-40 Sheet 28

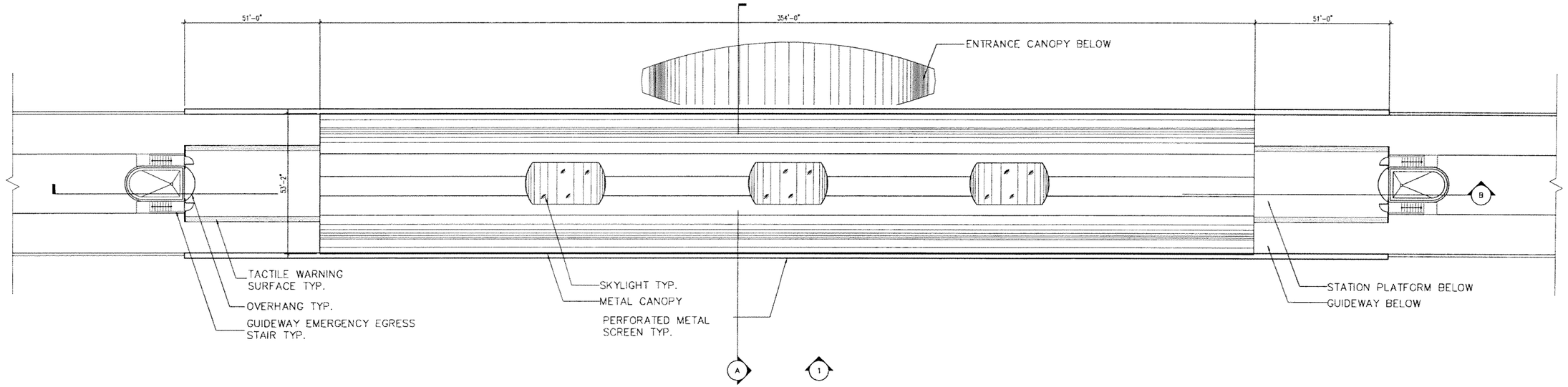

0 10 20 40

SUBJECT TO CHANGE

No.	Date	By/Chk	App.	Revisions
1	9/02/05			60% PROGRESS SET
2	10/17/05			70% PROGRESS SET
3	3/10/06			90% REVISED PROGRESS SET
4	5/22/06			100% SUBMITTAL

Designed by ML 5/06 Date
Drawn by JB 5/06 Date
Checked by ML 5/06 Date
Approved by Date

NORTH CORRIDOR METRORAIL EXTENSION - PRELIMINARY ENGINEERING (100% SUBMITTAL)

MIAMI-DADE COUNTY
MIAMI-DADE TRANSIT

PARSONS
7600 CORPORATE CENTER DRIVE, SUITE 500
MIAMI, FLORIDA 33126
PHONE: (786) 464-1000 FAX: (786) 845-7119
CERTIFICATE OF AUTHORIZATION NO. 1838

Approved | Date

EARTHTECH
Transportation Services
architecture · engineering · construction
3750 NW 87th Avenue, Suite 300
Miami, Florida 33178-2430
CERTIFICATE OF AUTHORIZATION NO. 8115
REGISTRATION # AA26000597

Approved | Date 05-22-06

DATE TIME FILE

PASSENGER STATIONS

NW 163RD ST. STATION ROOF PLAN

Scale 1"=40' | Drawing PST-41 | Sheet 49

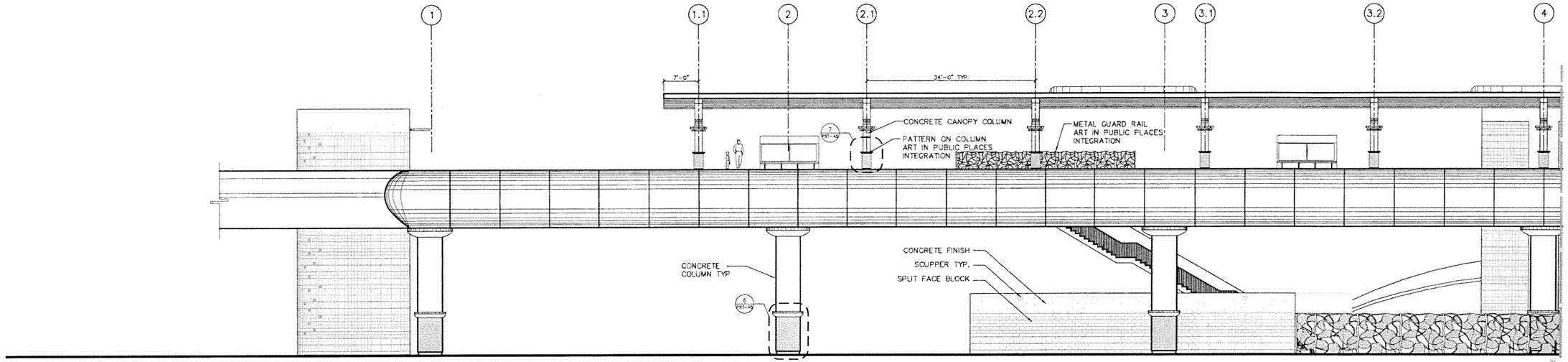

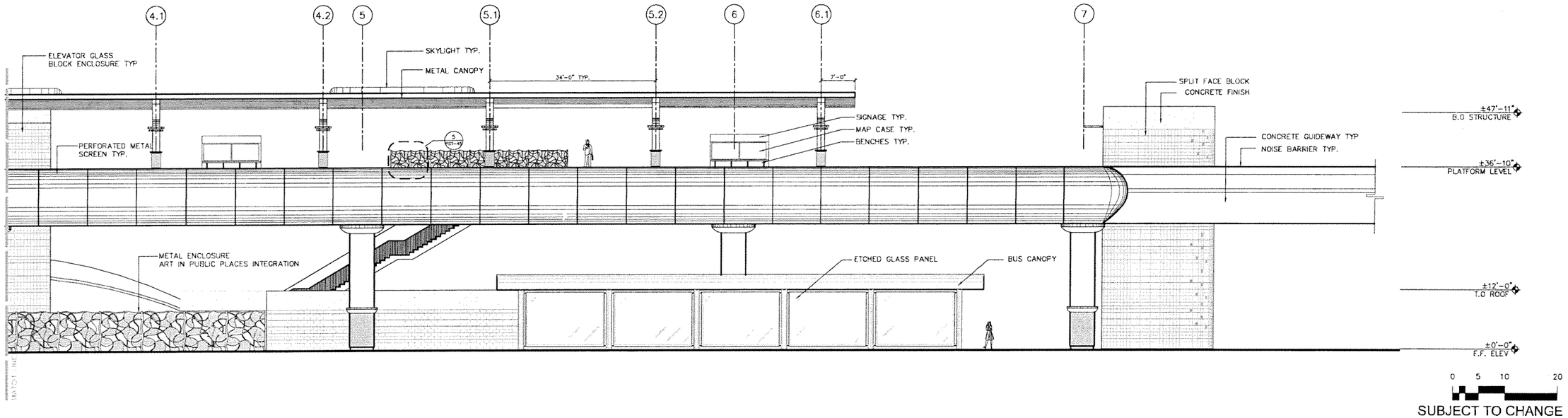

Designed by ML 5/06 Date	1	5/2/06			60% PROGRESS SET
	2	10/17/06			70% PROGRESS SET
Drawn by JB 5/06 Date	3	3/10/06			90% REVISED PROGRESS SET
	4	5/22/06			100% SUBMITTAL
Checked by ML 5/06 Date					
Approved by Date	No.	Date	By / Chk	App.	Revisions

NORTH CORRIDOR METRORAIL EXTENSION - PRELIMINARY ENGINEERING (100% SUBMITTAL)

MIAMI-DADE COUNTY

MIAMI-DADE TRANSIT

PARSONS
7600 CORPORATE CENTER DRIVE, SUITE 500
MIAMI, FLORIDA 33126
PHONE: (786) 464-1000 FAX: (786) 845-7119
CERTIFICATE OF AUTHORIZATION NO. 1838

EARTHTECH
Transportation Services
architecture · engineering · construction
3750 NW 87th Avenue, Suite 300
Miami, Florida 33178-2430
CERTIFICATE OF AUTHORIZATION NO. 8115
REGISTRATION # AA26000397

Approved	Date	Approved	Date	Scale	Drawing	Sheet
			05-22-06	1" = 20'	PST-42	50
			DATE	TIME	FILE	

PASSENGER STATIONS

NW 163RD ST. STATION 1-EAST ELEVATION

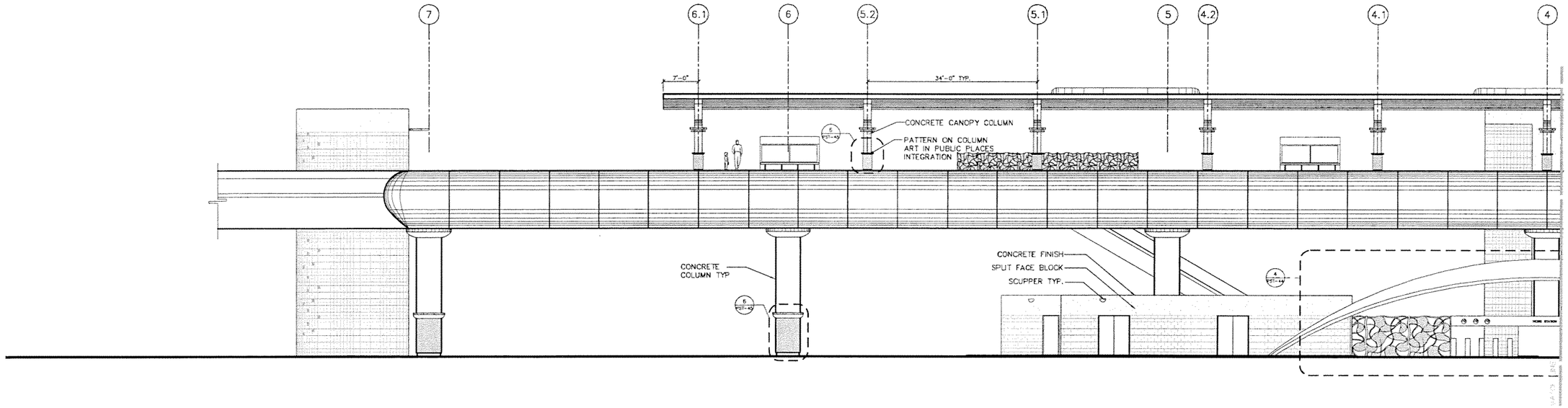

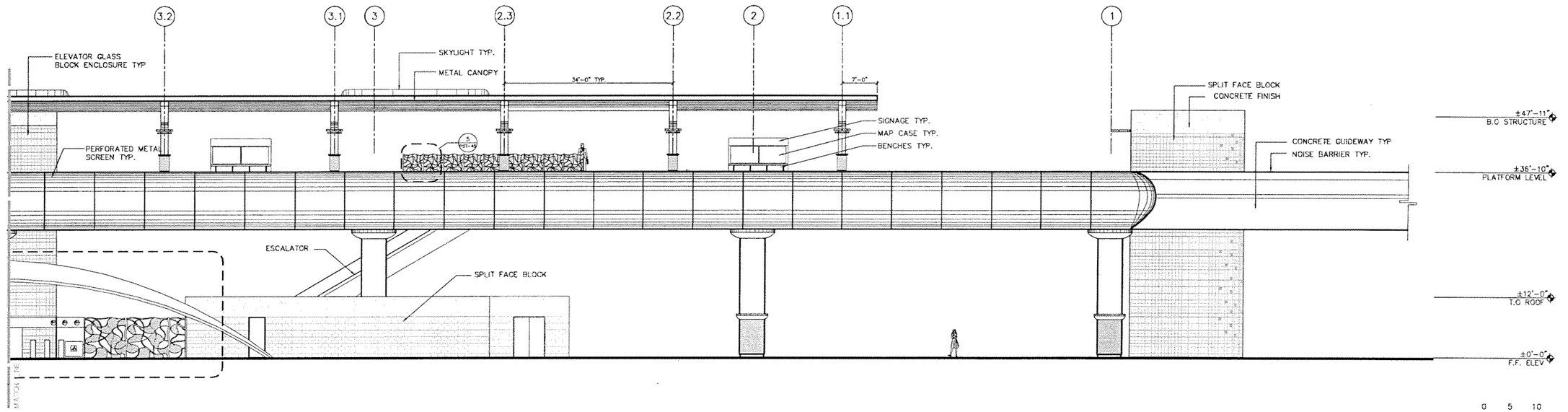

Designed by ML 5/06 Date	1	9/02/05			60% PROGRESS SET
	2	10/17/05			70% PROGRESS SET
Drawn by JB 5/06 Date	3	3/10/06			90% REVISED PROGRESS SET
	4	5/22/06			100% SUBMITTAL
Checked by ML 5/06 Date					
Approved by Date	No.	Date	By / Chk	App.	Revisions

NORTH CORRIDOR METRORAIL EXTENSION - PRELIMINARY ENGINEERING (100% SUBMITTAL)

MIAMI-DADE COUNTY

MIAMI-DADE TRANSIT

PARSONS
7600 CORPORATE CENTER DRIVE, SUITE 500
MIAMI, FLORIDA 33126
PHONE: (786) 464-1000 FAX: (786) 845-7119
CERTIFICATE OF AUTHORIZATION NO. 1838

Approved Date

EARTHTECH
Transportation Services
architecture · engineering · construction
3750 NW 87th Avenue, Suite 301
Miami, Florida 33178-2436
CERTIFICATE OF AUTHORIZATION NO. 8115
REGISTRATION # AA26000987

Approved Date 05-22-06

DATE TIME FILE

PASSENGER STATIONS

NW 163RD ST. STATION
2-WEST ELEVATION

Scale 1" = 20' | Drawing PST-43 | Sheet 51

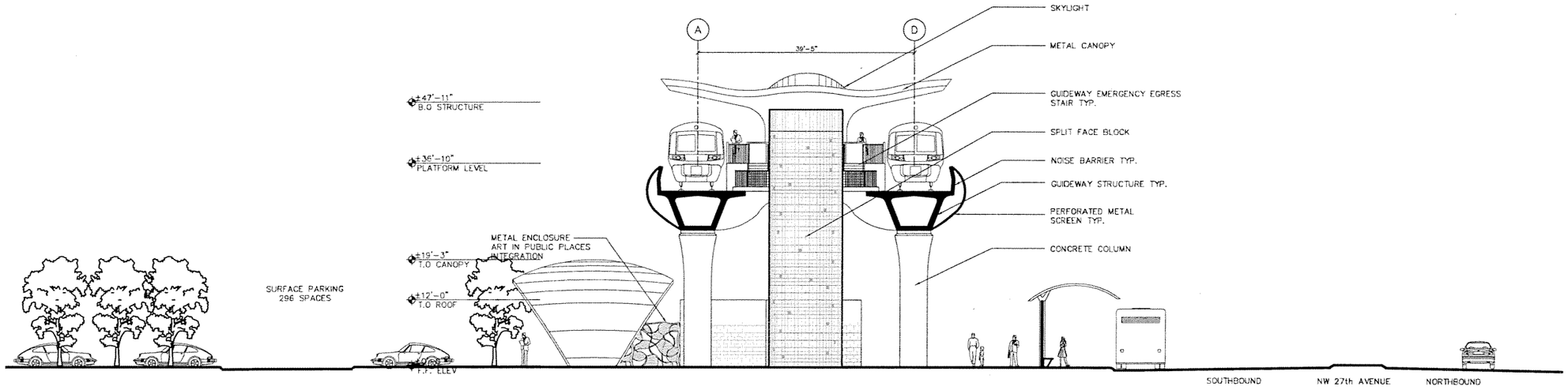

3-SOUTH ELEVATION

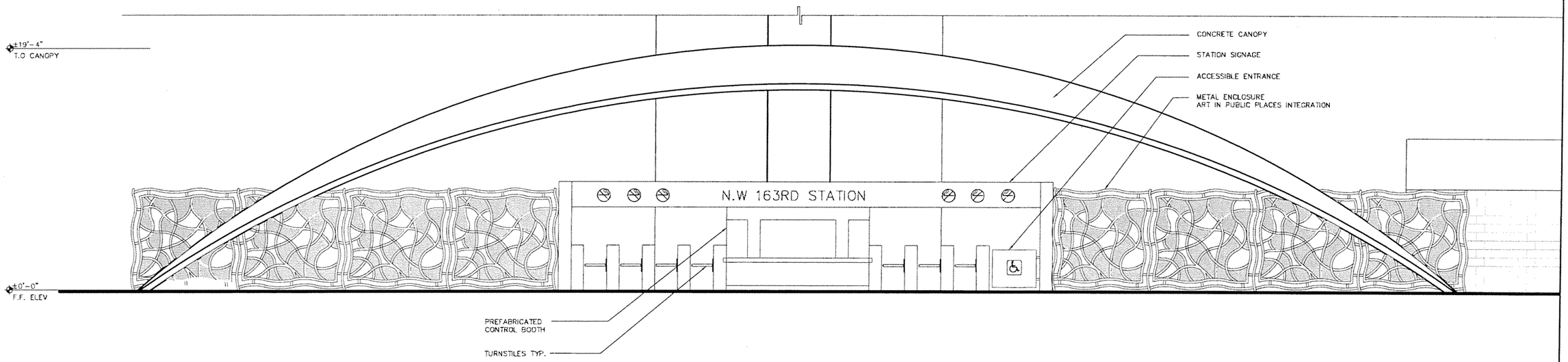

4-ENTRANCE CANOPY ELEVATION

SUBJECT TO CHANGE

Designed by ML 5/06 Date	1	5/02/05			60% PROGRESS SET
	2	10/17/06			70% PROGRESS SET
Drawn by JB 5/06 Date	3	3/10/06			90% REVISED PROGRESS SET
	4	5/22/06			100% SUBMITTAL
Checked by ML 5/06 Date					
Approved by Date	No.	Date	By / Chk	App.	Revisions

NORTH CORRIDOR METRORAIL EXTENSION - PRELIMINARY ENGINEERING (100% SUBMITTAL)

MIAMI-DADE COUNTY

MIAMI-DADE TRANSIT

PARSONS
7600 CORPORATE CENTER DRIVE, SUITE 500
MIAMI, FLORIDA 33126
PHONE: (786) 464-1000 FAX: (786) 845-7119
CERTIFICATE OF AUTHORIZATION NO. 1838

Approved | Date

EARTHTECH
Transportation Services
architecture · engineering · construction
3750 NW 87th Avenue, Suite 300
Miami, Florida 33178-2430
CERTIFICATE OF AUTHORIZATION NO. 8115
REGISTRATION # AA26000687

Approved | Date 05-22-06

DATE TIME FILE

PASSENGER STATIONS

NW 163RD ST. STATION ELEVATIONS

Scale NTS | Drawing PST-44 | Sheet 52

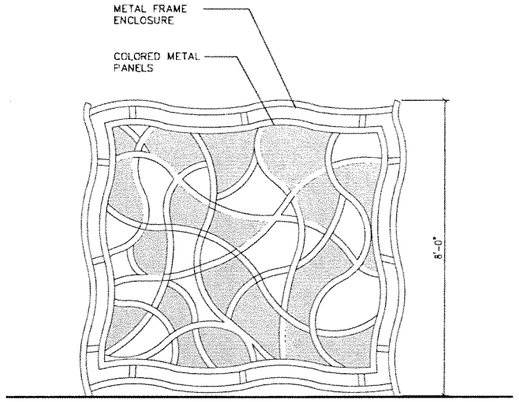

5-STATION DEFINING IMAGE ON CONCOURSE & ESCALATOR ENCLOSURE

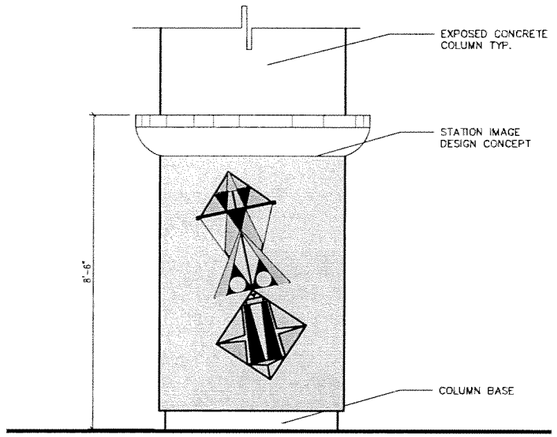

6-STATION DEFINING IMAGE ON STATION/GUIDEWAY SUPPORT COLUMNS

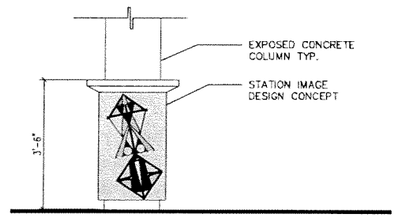

7-STATION DEFINING IMAGE ON STATION COLUMNS

NOTE: FINAL DESIGN ON COLUMN AND ENCLOSURE TO BE DETERMINED DURING FINAL DESIGN PHASE.

SUBJECT TO CHANGE

Designed by ML	No.	Date	By / Chk	App.	Revisions
Drawn by JB	1	9/02/05			60% PROGRESS SET
Checked by ML	2	10/17/05			70% PROGRESS SET
Approved by	3	3/10/06			90% REVISED PROGRESS SET
Date	4	5/22/06			100% SUBMITTAL

NORTH CORRIDOR METRORAIL EXTENSION - PRELIMINARY ENGINEERING (100% SUBMITTAL)

MIAMI-DADE COUNTY

MIAMI-DADE TRANSIT

PARSONS
7600 CORPORATE CENTER DRIVE, SUITE 500
MIAMI, FLORIDA 33126
PHONE: (786) 464-1000 FAX: (786) 845-7119
CERTIFICATE OF AUTHORIZATION NO. 1838

Approved | Date

EARTH TECH
Transportation Services
architecture · engineering · construction
3750 NW 87th Avenue, Suite 300
Miami, Florida 33178-2428
CERTIFICATE OF AUTHORIZATION NO. 8115
REGISTRATION # AA26000687

Approved | Date 05-22-06

DATE TIME FILE

PASSENGER STATIONS

NW 163RD ST. STATION ELEVATIONS DETAILS

Scale NTS | Drawing PST-45 | Sheet 53

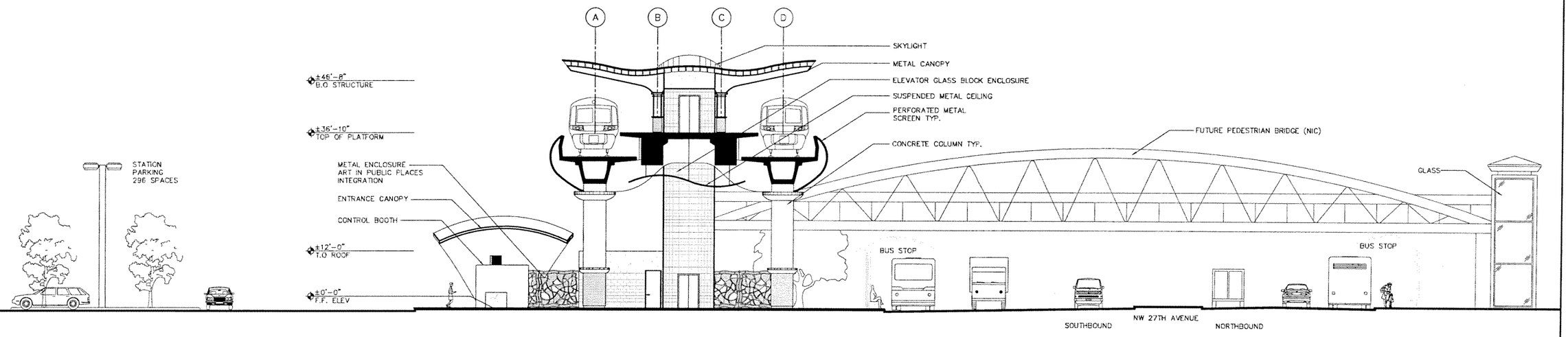

SECTION LOOKING NORTH

0 5 10 20

SUBJECT TO CHANGE

Designed by ML	Date 5/06	No.	Date	By / Chk	App.	Revisions
		1	9/12/05			60% PROGRESS SET
		2	10/17/05			70% PROGRESS SET
Drawn by JB	Date 5/06	3	3/10/06			90% REVISED PROGRESS SET
		4	5/22/06			100% SUBMITTAL
Checked by ML	Date 5/06					
Approved by	Date					

NORTH CORRIDOR METRORAIL EXTENSION - PRELIMINARY ENGINEERING (100% SUBMITTAL)

MIAMI-DADE COUNTY — MIAMI-DADE TRANSIT

PARSONS
7600 CORPORATE CENTER DRIVE, SUITE 500
MIAMI, FLORIDA 33126
PHONE: (786) 464-1000 FAX: (786) 845-7119
CERTIFICATE OF AUTHORIZATION NO. 1838

Approved | Date

EARTHTECH
Transportation Services
architecture · engineering · construction
3750 NW 87th Avenue, Suite 325
Miami, Florida 33178-2436
CERTIFICATE OF AUTHORIZATION NO. 3115
REGISTRATION # AA26000367

Approved | Date 05-22-06

DATE TIME FILE

PASSENGER STATIONS

NW 163RD ST. STATION A-CROSS SECTION

Scale 1"=20' | Drawing PST-46 | Sheet 54

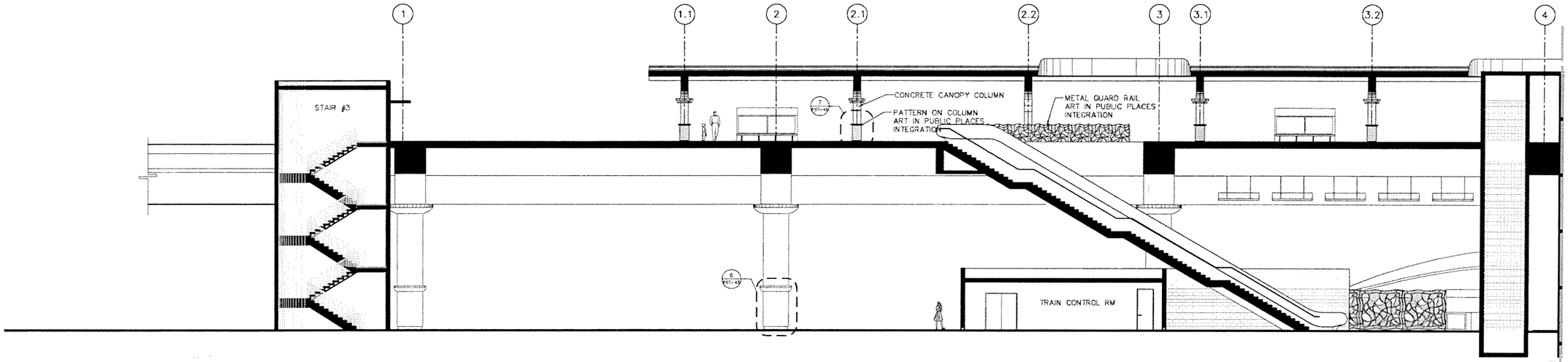

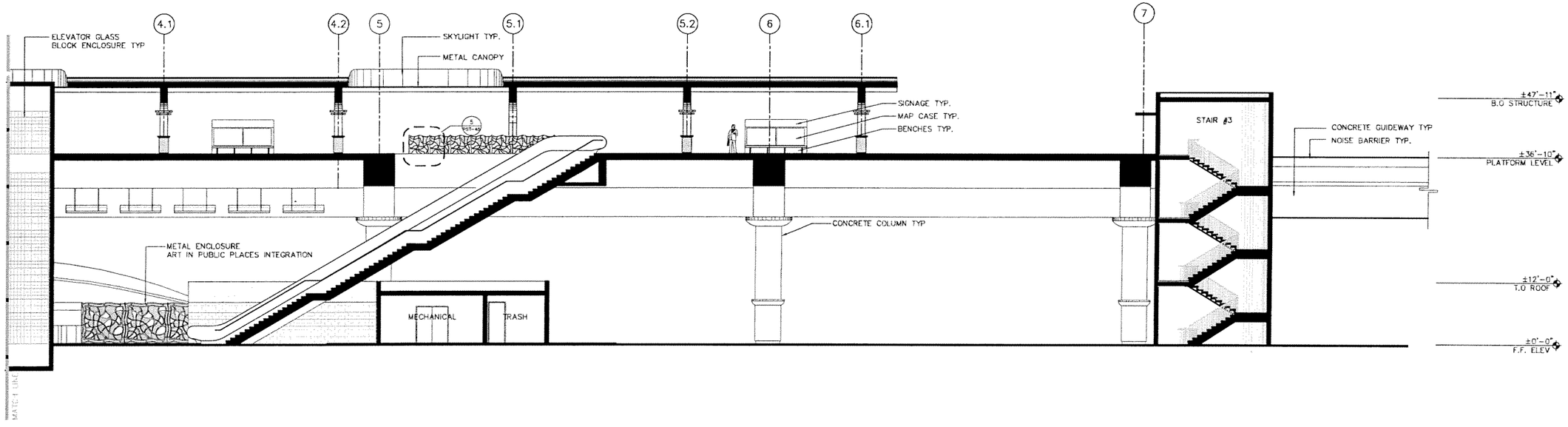

SECTION LOOKING WEST

0 5 10 20

SUBJECT TO CHANGE

Designed by ML 5/06	1	9/02/05			60% PROGRESS SET
	2	10/17/05			70% PROGRESS SET
Drawn by JB 5/06	3	3/19/06			90% REVISED PROGRESS SET
	4	5/22/06			100% SUBMITTAL
Checked by ML 5/06					
Approved by Date	No.	Date	By / Chk	App.	Revisions

NORTH CORRIDOR METRORAIL EXTENSION - PRELIMINARY ENGINEERING (100% SUBMITTAL)

MIAMI-DADE COUNTY — MIAMI-DADE TRANSIT

PARSONS
7600 CORPORATE CENTER DRIVE, SUITE 500
MIAMI, FLORIDA 33126
PHONE: (786) 464-1000 FAX: (786) 845-7119
CERTIFICATE OF AUTHORIZATION NO. 1838

EARTHTECH
Transportation Services
architecture · engineering · construction
3750 NW 87th Avenue, Suite 300
Miami, Florida 33178-2430
CERTIFICATE OF AUTHORIZATION NO. 6116
REGISTRATION # AA26000897

Approved	Date	Approved	Date	Scale	Drawing	Sheet
			05-22-06	1"=20'	PST-47	55
			DATE	TIME	FILE	

PASSENGER STATIONS

NW 163RD ST. STATION
B-LONGITUDINAL SECTION

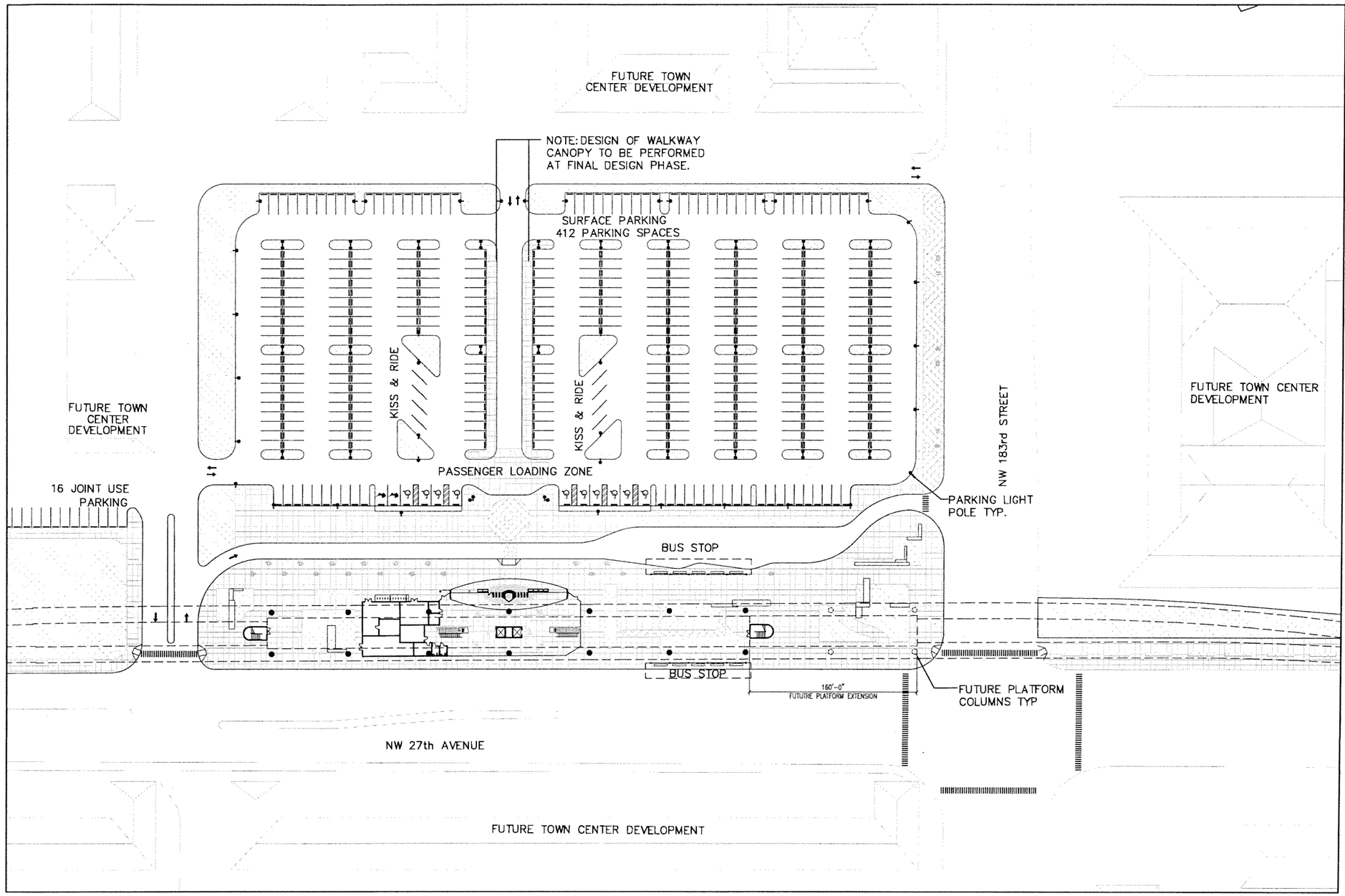

NOTE:

1. FOR GUIDEWAY COLUMN LOCATIONS OUTSIDE THE STATION LIMITS REFER TO GUIDEWAY STRUCTURE DRAWINGS.
2. ARCHITECTURAL SITEPLAN SHOWS CONFIGURATION OF GREEN AREAS ONLY, REFER TO LANDSCAPE DRAWINGS FOR DETAILS.
3. FINAL LOCATION FOR POWER SUBSTATION TO BE DETERMINED AFTER PRELIMINARY ENGINEERING PHASE.

0 25 50 100

SUBJECT TO CHANGE

Designed by ML 5/06	1	9/02/05			60% PROGRESS SET
Drawn by ER 5/06	2	10/17/05			70% PROGRESS SET
Checked by ML 5/06	3	3/16/06			90% REVISED PROGRESS SET
	4	5/22/06			100% SUBMITTAL
Approved by Date	No.	Date	By / Chk	App.	Revisions

NORTH CORRIDOR METRORAIL EXTENSION - PRELIMINARY ENGINEERING (100% SUBMITTAL)

MIAMI-DADE COUNTY — MIAMI-DADE TRANSIT

PARSONS
7600 CORPORATE CENTER DRIVE, SUITE 500
MIAMI, FLORIDA 33126
PHONE: (786) 464-1000 FAX: (786) 845-7119
CERTIFICATE OF AUTHORIZATION NO. 1838

Approved — Date

EARTHTECH
Transportation Services
architecture · engineering · construction
3750 NW 87th Avenue, Suite 300
Miami, Florida 33178-2428
CERTIFICATE OF AUTHORIZATION NO. 8115
REGISTRATION # AA26000367

Approved — Date 05-22-06

DATE TIME FILE

PASSENGER STATIONS

NW 183RD ST. STATION SITE PLAN

Scale 1" = 100' | Drawing PST-48 | Sheet 56

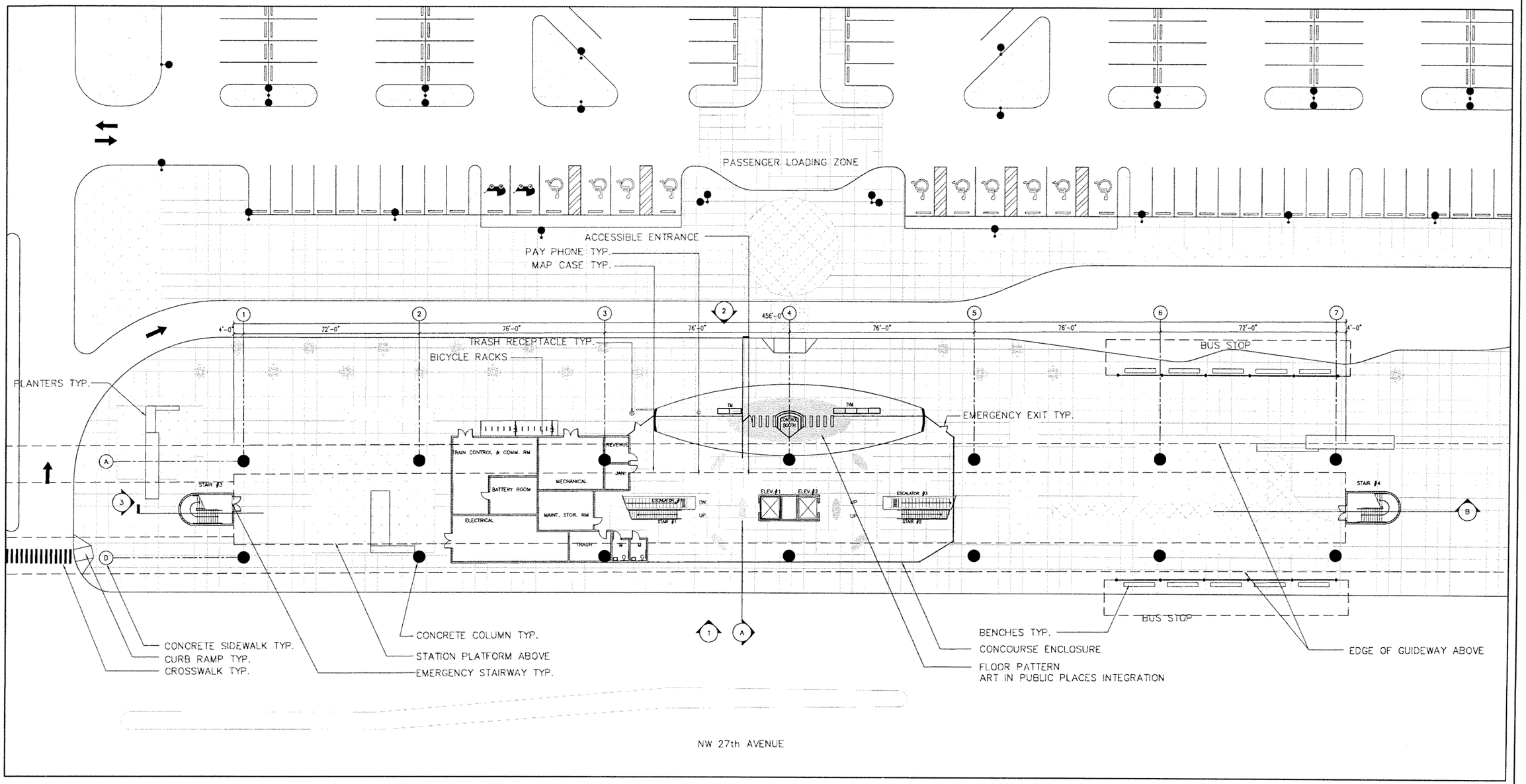

0 10 20 40

SUBJECT TO CHANGE

Designed by ML. 5/06	1	9/12/05			60% PROGRESS SET
Drawn by ER 5/06	2	10/17/05			70% PROGRESS SET
Checked by ML 5/06	3	3/17/06			90% REVISED PROGRESS SET
Approved by	4	5/22/06			100% SUBMITTAL
Date	No.	Date	By / Chk	App.	Revisions

NORTH CORRIDOR METRORAIL EXTENSION - PRELIMINARY ENGINEERING (100% SUBMITTAL)

MIAMI-DADE COUNTY

MIAMI-DADE TRANSIT

PARSONS
7600 CORPORATE CENTER DRIVE, SUITE 500
MIAMI, FLORIDA 33126
PHONE: (786) 464-1000 FAX: (786) 845-7119
CERTIFICATE OF AUTHORIZATION NO. 1838

Approved ____ Date ____

EARTHTECH
Transportation Services
architecture · engineering · construction
3750 NW 87th Avenue, Suite 300
Miami, Florida 33178-2428
CERTIFICATE OF AUTHORIZATION NO. 8115
REGISTRATION # AA26000681

Approved ____ Date 05-22-06

DATE TIME FILE

PASSENGER STATIONS

NW 183RD ST. STATION PLAZA LEVEL PLAN

Scale 1"=40' Drawing PST-49 Sheet 57

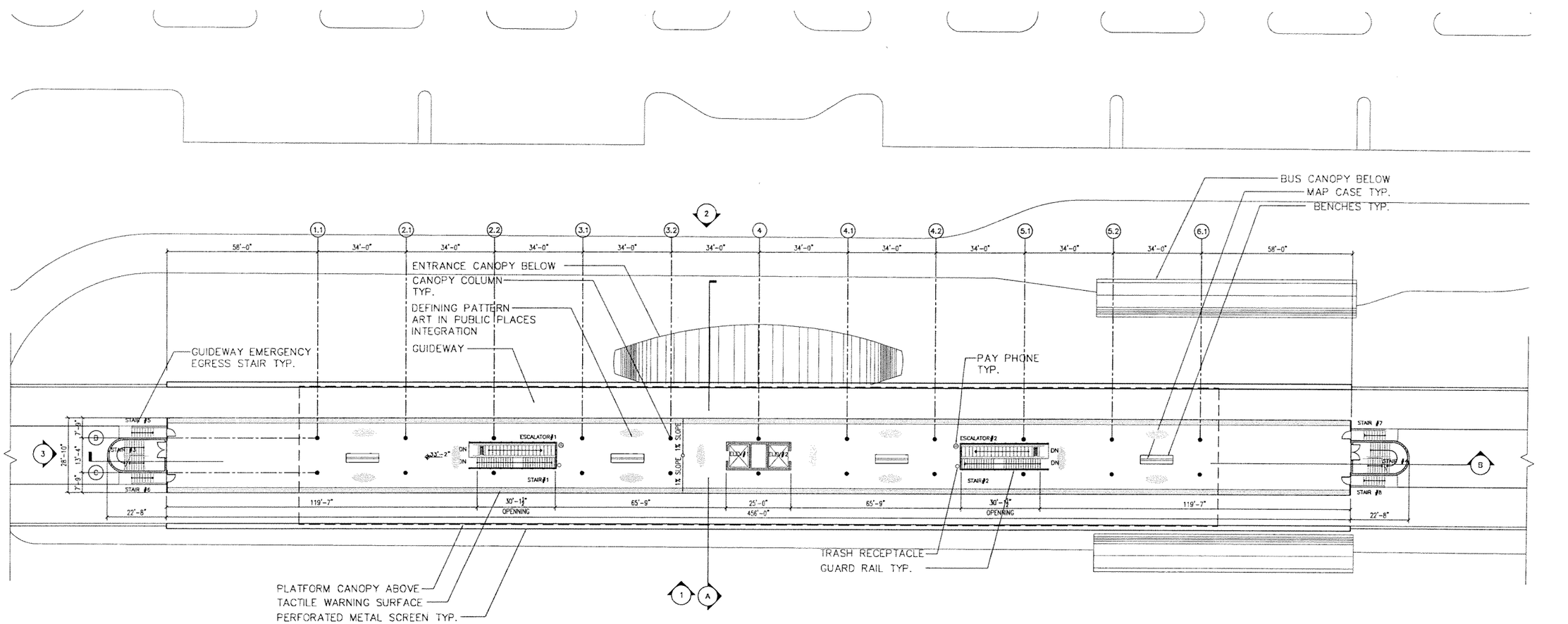

NW 27th AVENUE

0 10 20 40

SUBJECT TO CHANGE

No.	Date	By / Chk	App.	Revisions
1	9/22/05			60% PROGRESS SET
2	10/17/05			70% PROGRESS SET
3	3/10/06			90% REVISED PROGRESS SET
4	5/22/06			100% SUBMITTAL

Designed by ML 5/06 Date
Drawn by ER 5/06 Date
Checked by ML 5/06 Date
Approved by Date

NORTH CORRIDOR METRORAIL EXTENSION - PRELIMINARY ENGINEERING (100% SUBMITTAL)

MIAMI-DADE COUNTY
MIAMI-DADE TRANSIT

PARSONS
7600 CORPORATE CENTER DRIVE, SUITE 500
MIAMI, FLORIDA 33126
PHONE: (786) 464-1000 FAX: (786) 845-7119
CERTIFICATE OF AUTHORIZATION NO. 1838
Approved Date

EARTH TECH
Transportation Services
architecture · engineering · construction
3750 NW 87th Avenue, Suite 300
Miami, Florida 33178-2428
CERTIFICATE OF AUTHORIZATION NO. 9115
REGISTRATION # AA26000967
Approved Date 05-22-06
DATE TIME FILE

PASSENGER STATIONS

NW 183RD ST. STATION PLATFORM PLAN

Scale 1"=40' Drawing PST-50 Sheet 58

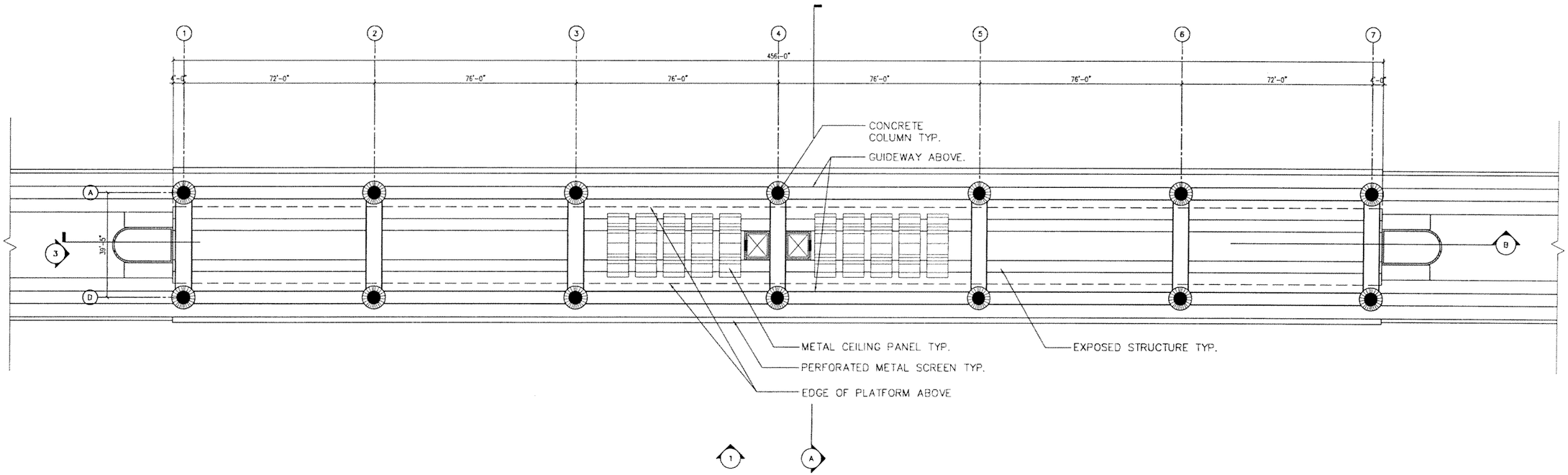

0 10 20 40

SUBJECT TO CHANGE

Designed by ML 5/06	1	9/02/05			60% PROGRESS SET
Drawn by ER 5/06	2	10/17/05			70% PROGRESS SET
Checked by ML 5/06	3	3/10/06			90% REVISED PROGRESS SET
Approved by Date	4	5/22/06			100% SUBMITTAL
	No.	Date	By / Chk	App.	Revisions

NORTH CORRIDOR METRORAIL EXTENSION - PRELIMINARY ENGINEERING (100% SUBMITTAL)

MIAMI-DADE COUNTY

MIAMI-DADE TRANSIT

PARSONS
7600 CORPORATE CENTER DRIVE, SUITE 500
MIAMI, FLORIDA 33126
PHONE: (786) 464-1000 FAX: (786) 845-7119
CERTIFICATE OF AUTHORIZATION NO. 1838

Approved | Date

EARTHTECH
Transportation Services
architecture · engineering · construction
3750 NW 87th Avenue, Suite 300
Miami, Florida 33178-2428
CERTIFICATE OF AUTHORIZATION NO. 8115
REGISTRATION # AA26001897

Approved | Date 05-22-06

DATE TIME FILE

PASSENGER STATIONS

NW 183RD ST. STATION REFLECTED CEILING PLAN

Scale 1" = 40' | Drawing PST-51 | Sheet 59

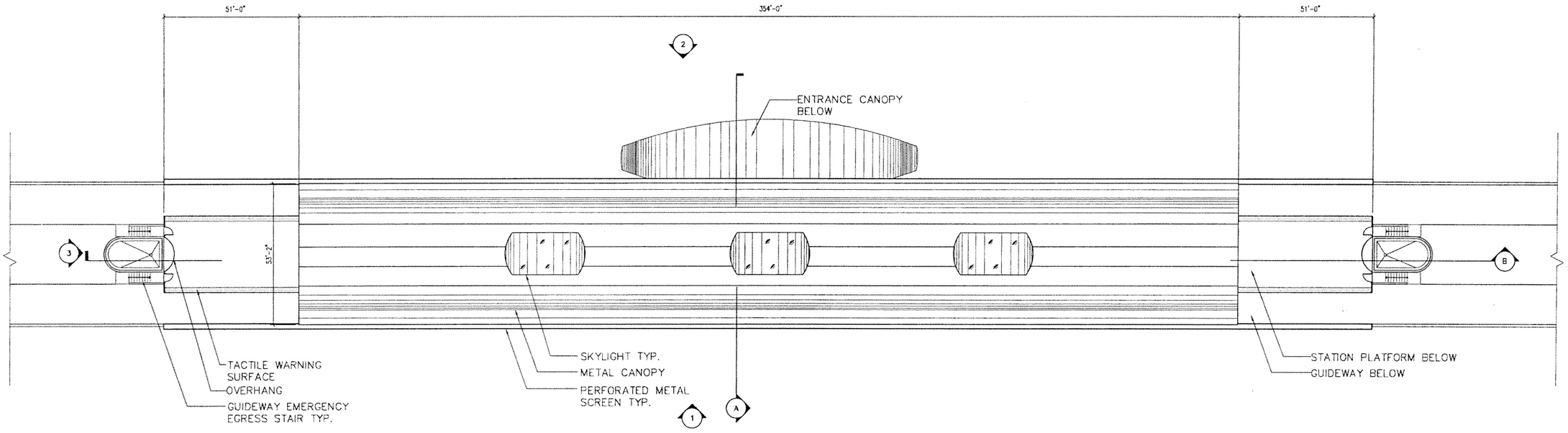

0 10 20 40

SUBJECT TO CHANGE

Designed by ML 5/06 Date	1	9/02/05			60% PROGRESS SET
Drawn by ER 5/06 Date	2	10/17/05			70% PROGRESS SET
Checked by ML 5/06 Date	3	3/10/06			90% REVISED PROGRESS SET
Approved by Date	4	5/22/06			100% SUBMITTAL
	No.	Date	By Chk	App.	Revisions

NORTH CORRIDOR METRORAIL EXTENSION - PRELIMINARY ENGINEERING (100% SUBMITTAL)

MIAMI-DADE COUNTY

MIAMI-DADE TRANSIT

PARSONS
7600 CORPORATE CENTER DRIVE, SUITE 500
MIAMI, FLORIDA 33126
PHONE: (786) 464-1000 FAX: (786) 845-7119
CERTIFICATE OF AUTHORIZATION NO. 1838

Approved Date

EARTHTECH
Transportation Services
architecture · engineering · construction
3756 NW 87th Avenue, Suite 301
Miami, Florida 33178-2430
CERTIFICATE OF AUTHORIZATION NO. 8115
REGISTRATION # AA26000987

Approved Date 05-22-06

DATE TIME FILE

PASSENGER STATIONS

NW 183RD ST. STATION ROOF PLAN

Scale 1"=40' Drawing PST-52 Sheet 60

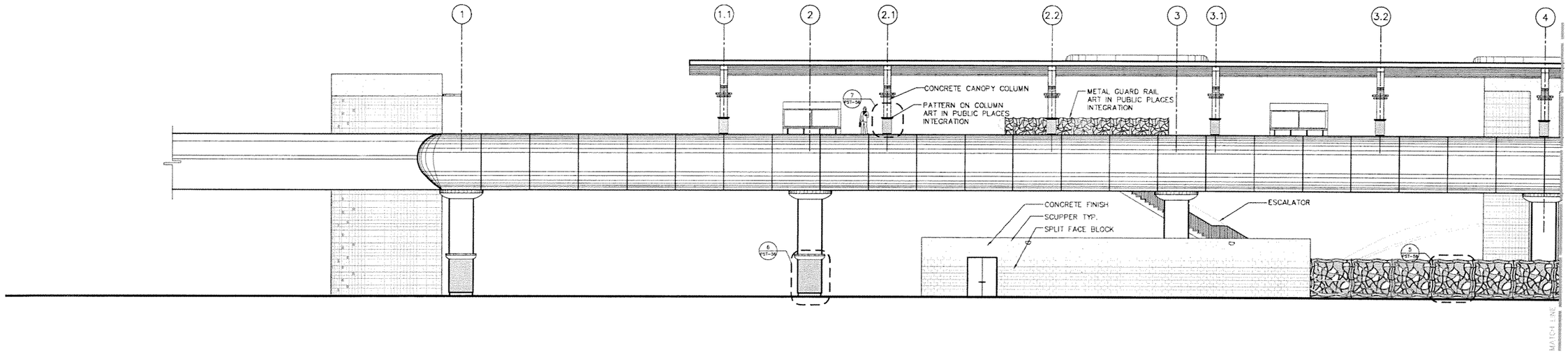

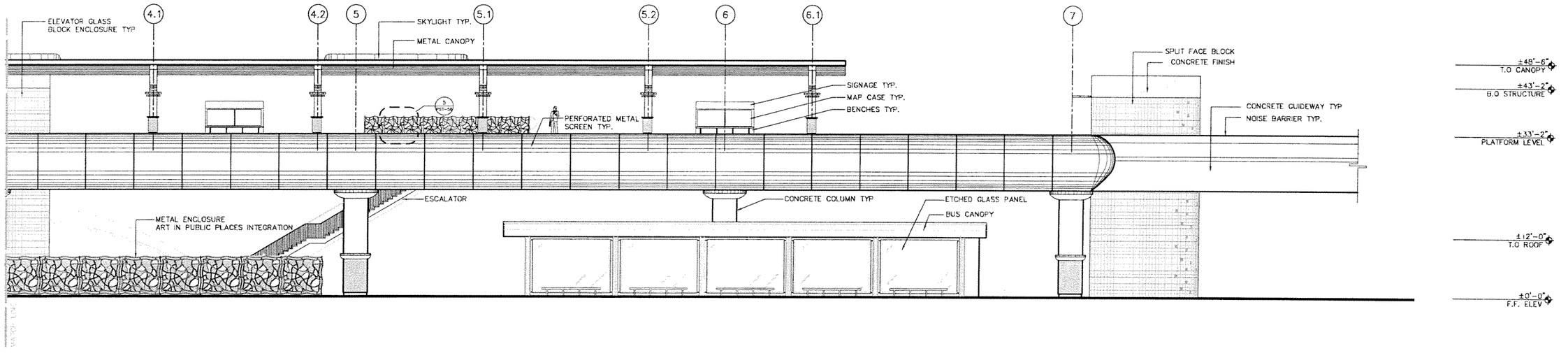

0 5 10 20

SUBJECT TO CHANGE

Designed by ML 5/06	1	5/02/06				60% PROGRESS SET
Drawn by DB 5/06	2	10/17/06				70% PROGRESS SET
Checked by ML 5/06	3	3/19/06				90% REVISED PROGRESS SET
	4	5/22/06				100% SUBMITTAL
Approved by	No.	Date	By / Chk	App.	Revisions	

NORTH CORRIDOR METRORAIL EXTENSION - PRELIMINARY ENGINEERING (100% SUBMITTAL)

MIAMI-DADE COUNTY

MIAMI-DADE TRANSIT

PARSONS
7600 CORPORATE CENTER DRIVE, SUITE 500
MIAMI, FLORIDA 33126
PHONE: (786) 464-1000 FAX: (786) 845-7119
CERTIFICATE OF AUTHORIZATION NO. 1838

Approved ____ Date ____

EARTHTECH
Transportation Services
architecture · engineering · construction
3750 NW 87th Avenue, Suite 300
Miami, Florida 33178-2405
CERTIFICATE OF AUTHORIZATION NO. 8115
REGISTRATION # AA26000697

Approved ____ Date 05-22-06

DATE TIME FILE

PASSENGER STATIONS

NW 183RD ST. STATION
1- EAST ELEVATION

Scale 1" = 20' | Drawing PST-53 | Sheet 61

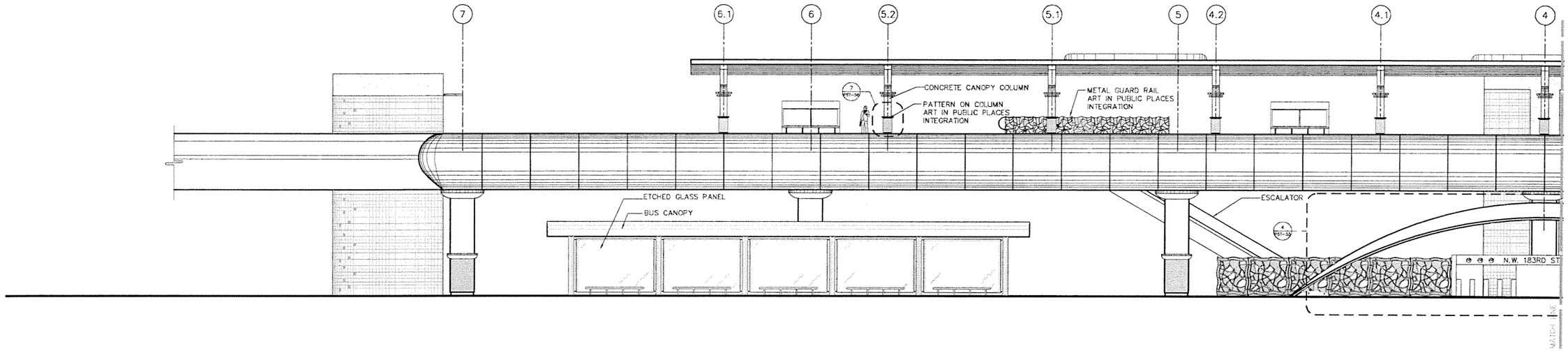

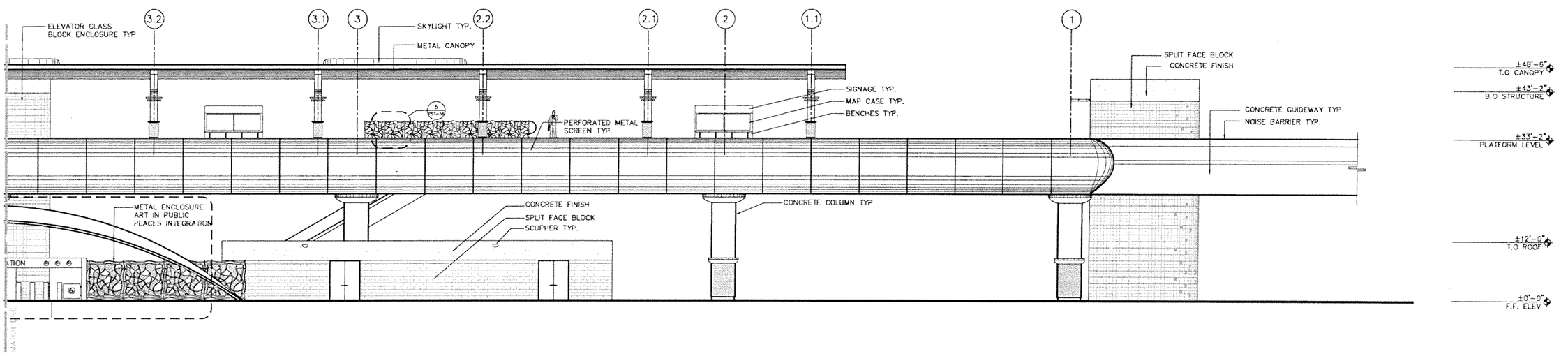

0 5 10 20

SUBJECT TO CHANGE

Designed by ML 5/06	No.	Date	By / Chk	App.	Revisions
Drawn by DB 5/06	1	9/02/05			60% PROGRESS SET
Checked by ML 5/06	2	03/17/06			70% PROGRESS SET
Approved by Date	3	5/19/06			90% REVISED PROGRESS SET
	4	5/22/06			100% SUBMITTAL

NORTH CORRIDOR METRORAIL EXTENSION - PRELIMINARY ENGINEERING (100% SUBMITTAL)

MIAMI-DADE COUNTY

MIAMI-DADE TRANSIT

PARSONS
7600 CORPORATE CENTER DRIVE, SUITE 500
MIAMI, FLORIDA 33126
PHONE: (786) 464-1000 FAX: (786) 845-7119
CERTIFICATE OF AUTHORIZATION NO. 1838

Approved ____ Date ____

EARTH TECH
Transportation Services
architecture · engineering · construction
3750 NW 87th Avenue, Suite 300
Miami, Florida 33178-2428
CERTIFICATE OF AUTHORIZATION NO. 8115
REGISTRATION # AA26000097

Approved ____ Date 05-22-06

DATE TIME FILE

PASSENGER STATIONS

NW 183RD ST. STATION
2-WEST ELEVATION

Scale 1" = 20' | Drawing PST-54 | Sheet 62

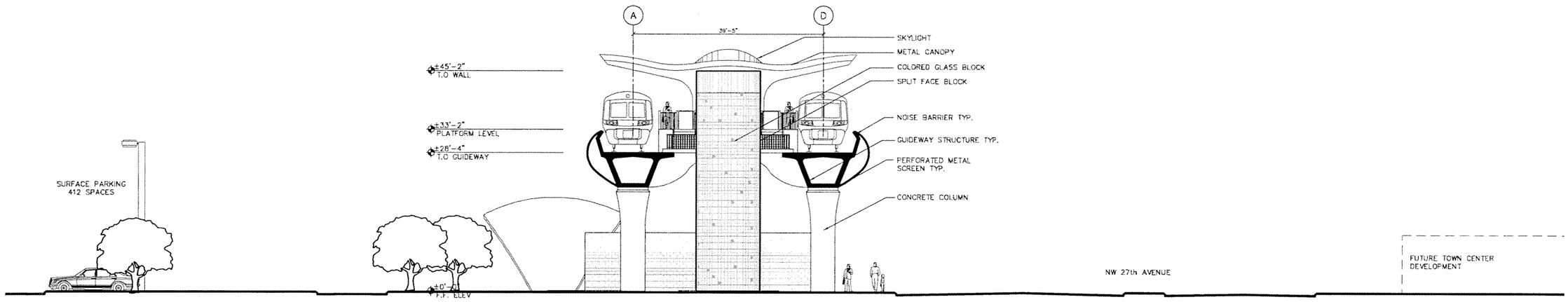

3-SOUTH ELEVATION

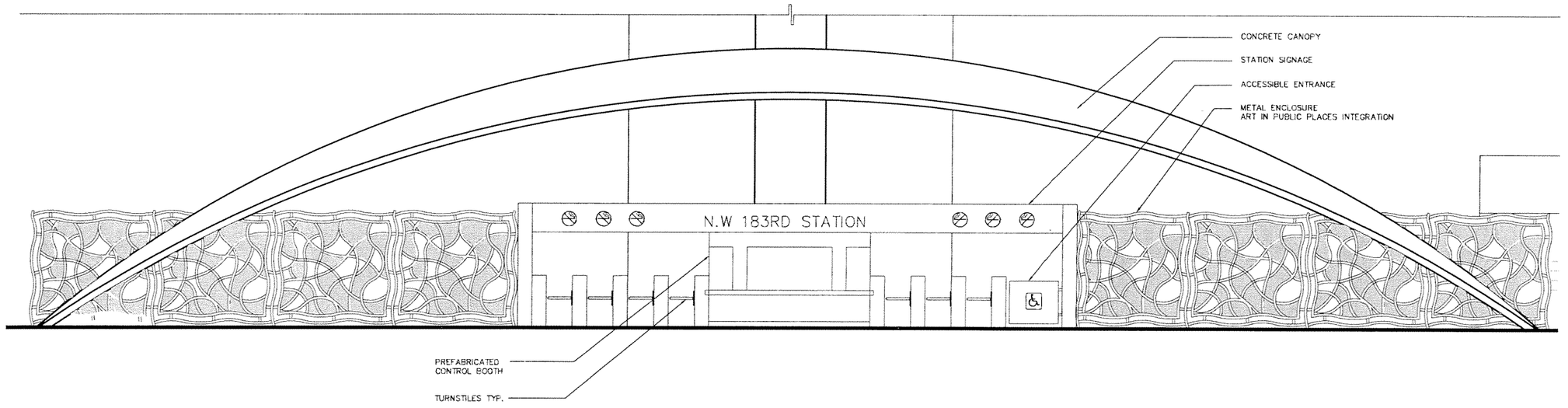

4-ENTRANCE CANOPY ELEVATION

SUBJECT TO CHANGE

Designed by ML 5/06	1	9/02/05			60% PROGRESS SET
Drawn by DB 5/06	2	10/17/05			70% PROGRESS SET
Checked by ML 5/06	3	3/10/06			90% REVISED PROGRESS SET
	4	5/22/06			100% SUBMITTAL
Approved by Date	No.	Date	By / Chk	App.	Revisions

NORTH CORRIDOR METRORAIL EXTENSION - PRELIMINARY ENGINEERING (100% SUBMITTAL)

MIAMI-DADE COUNTY — MIAMI-DADE TRANSIT

PARSONS
7600 CORPORATE CENTER DRIVE, SUITE 500
MIAMI, FLORIDA 33126
PHONE: (786) 464-1000 FAX: (786) 845-7119
CERTIFICATE OF AUTHORIZATION NO. 1838

EARTHTECH
Transportation Services
architecture · engineering · construction
3750 NW 87th Avenue, Suite 300
Miami, Florida 33178-2436
CERTIFICATE OF AUTHORIZATION NO. 8115
REGISTRATION # AA26000687

Approved	Date	Approved	Date	Scale	Drawing	Sheet
			05-22-06	NTS	PST-55	63
			DATE TIME FILE			

PASSENGER STATIONS

NW 183RD ST. STATION ELEVATIONS

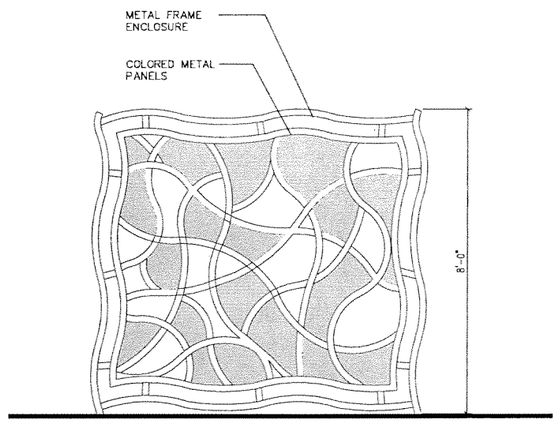

5-STATION DEFINING IMAGE ON CONCOURSE & ESCALATOR ENCLOSURE

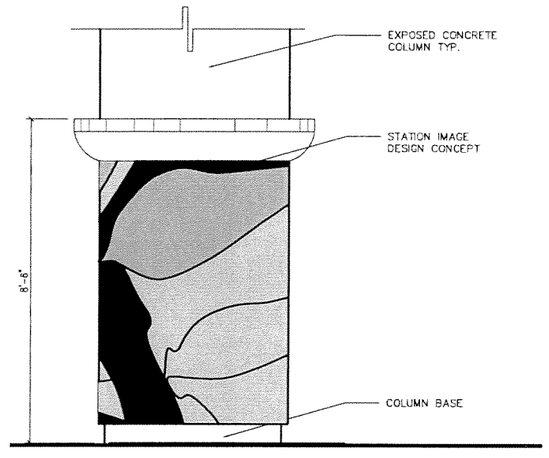

6-STATION DEFINING IMAGE ON STATION/GUIDEWAY SUPPORT COLUMNS

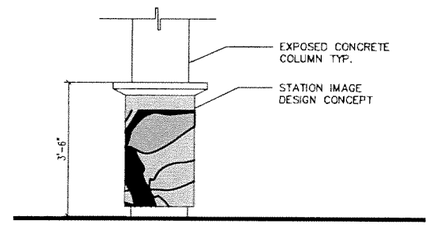

7-STATION DEFINING IMAGE ON STATION COLUMNS

NOTE: FINAL DESIGN ON COLUMN AND ENCLOSURE TO BE DETERMINED DURING FINAL DESIGN PHASE.

SUBJECT TO CHANGE

Designed by ML 5/06	1	9/02/05			60% PROGRESS SET
Drawn by DB 5/06	2	10/17/05			70% PROGRESS SET
Checked by ML 5/06	3	3/10/06			90% REVISED PROGRESS SET
	4	5/22/06			100% SUBMITTAL
Approved by Date	No.	Date	By / Chk	App.	Revisions

NORTH CORRIDOR METRORAIL EXTENSION - PRELIMINARY ENGINEERING (100% SUBMITTAL)

MIAMI-DADE COUNTY — MIAMI-DADE TRANSIT

PARSONS
7600 CORPORATE CENTER DRIVE, SUITE 500
MIAMI, FLORIDA 33126
PHONE: (786) 464-1000 FAX: (786) 845-7119
CERTIFICATE OF AUTHORIZATION NO. 1838

Approved ____ Date ____

EARTHTECH
Transportation Services
architecture · engineering · construction
3750 NW 87th. Avenue, Suite 500
Miami, Florida 33178-2430
CERTIFICATE OF AUTHORIZATION NO. 8115
REGISTRATION # AA26000687

Approved ____ Date 05-22-06

PASSENGER STATIONS

NW 183RD ST. STATION ELEVATIONS

Scale NTS | Drawing PST-56 | Sheet 64

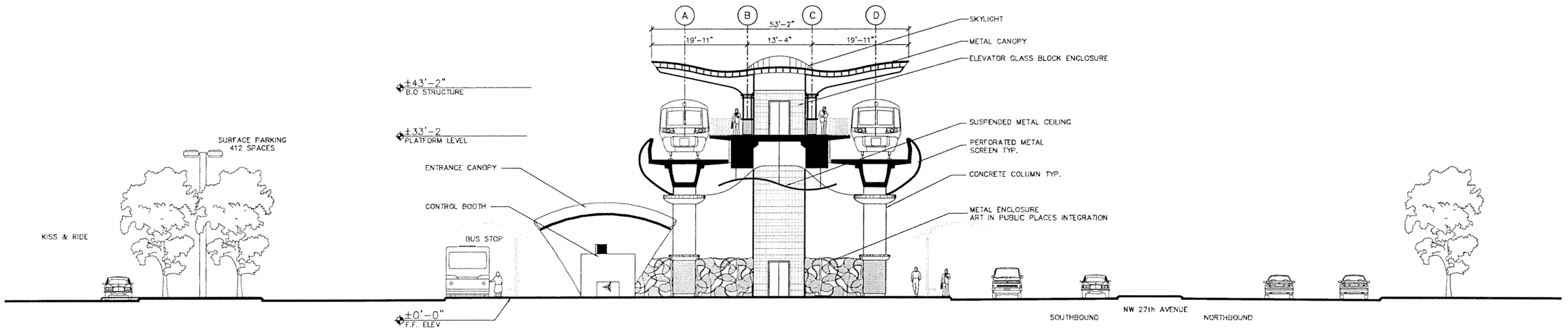

SECTION LOOKING NORTH

0 5 10 20

SUBJECT TO CHANGE

Designed by ML 5/16/06 Date	1	5/12/05				60% PROGRESS SET
	2	10/17/05				70% PROGRESS SET
Drawn by DB 5/16/06 Date	3	3/10/06				90% REVISED PROGRESS SET
	4	5/22/06				100% SUBMITTAL
Checked by ML 5/16/06 Date						
Approved by Date	No.	Date	By / Chk	App.		Revisions

NORTH CORRIDOR METRORAIL EXTENSION - PRELIMINARY ENGINEERING (100% SUBMITTAL)

MIAMI-DADE COUNTY

MIAMI-DADE TRANSIT

PARSONS
7600 CORPORATE CENTER DRIVE, SUITE 500
MIAMI, FLORIDA 33126
PHONE: (786) 464-1000 FAX: (786) 845-7119
CERTIFICATE OF AUTHORIZATION NO. 1838

Approved | Date

EARTH TECH
Transportation Services
architecture · engineering · construction
3750 NW 87th Avenue, Suite 300
Miami, Florida 33178-2436
CERTIFICATE OF AUTHORIZATION NO. 8115
REGISTRATION # AA26000967

Approved | Date 05-22-06

DATE TIME FILE

PASSENGER STATIONS

NW 183RD ST. STATION
A-CROSS SECTION

Scale 1"=20' | Drawing PST-57 | Sheet 65

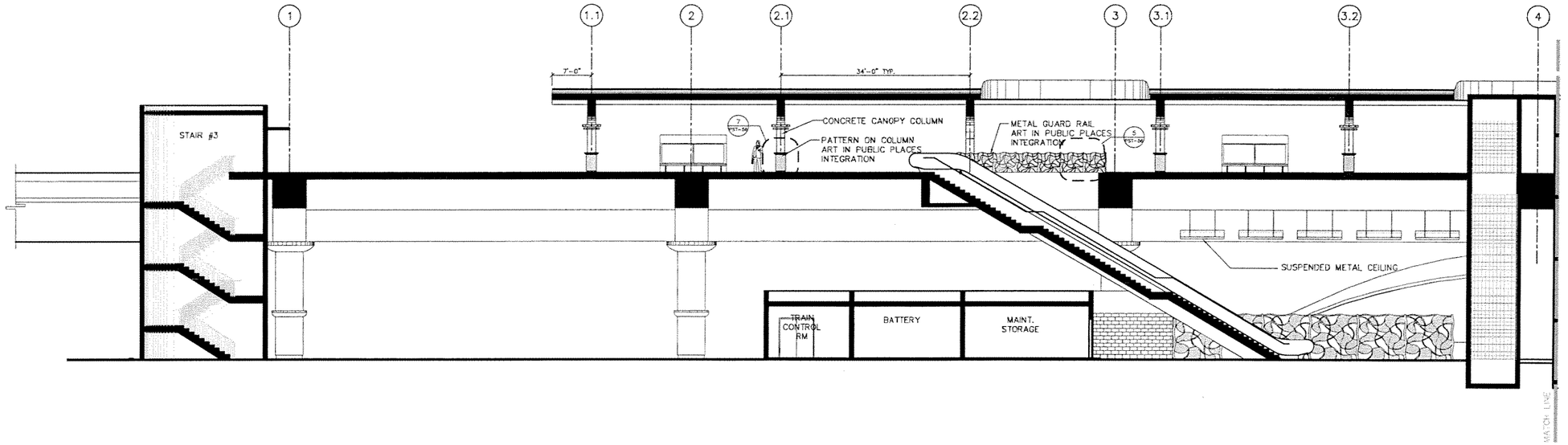

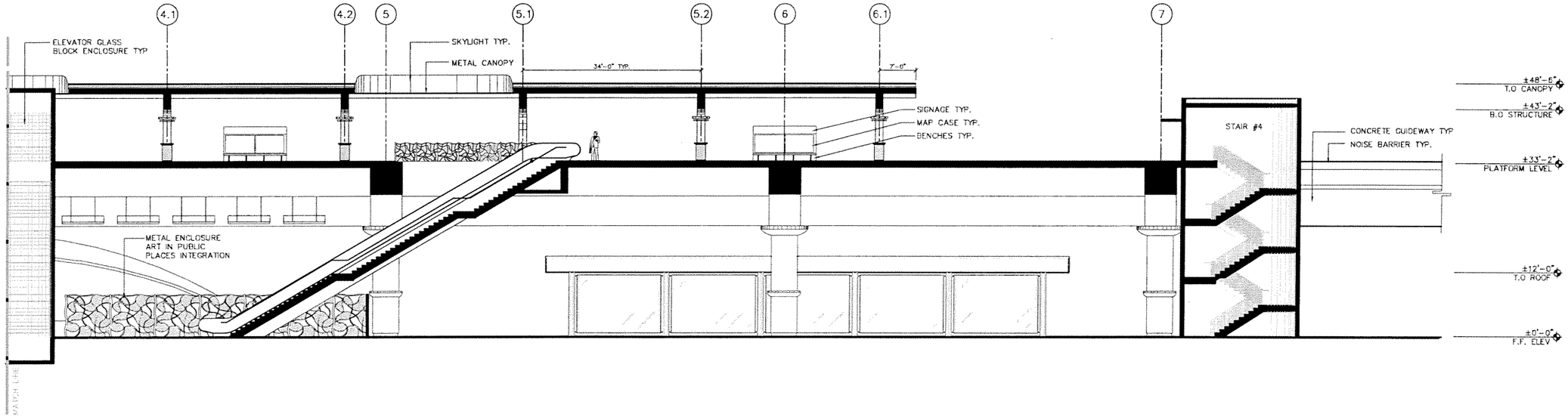

SECTION LOOKING WEST

0 5 10 20

SUBJECT TO CHANGE

Designed by ML 5/16/06	1	9/02/05			60% PROGRESS SET
	2	10/17/05			70% PROGRESS SET
Drawn by DB 5/16/06	3	3/13/06			90% REVISED PROGRESS SET
	4	5/22/06			100% SUBMITTAL
Checked by ML 5/16/06					
Approved by Date	No.	Date	By / Chk	App.	Revisions

NORTH CORRIDOR METRORAIL EXTENSION - PRELIMINARY ENGINEERING (100% SUBMITTAL)

MIAMI-DADE COUNTY

MIAMI-DADE TRANSIT

PARSONS
7600 CORPORATE CENTER DRIVE, SUITE 500
MIAMI, FLORIDA 33126
PHONE: (786) 464-1000 FAX: (786) 645-7119
CERTIFICATE OF AUTHORIZATION NO. 1838

Approved | Date

EARTHTECH
Transportation Services
architecture · engineering · construction
3752 NW 97th Avenue, Suite 300
Miami, Florida 33178-2432
CERTIFICATE OF AUTHORIZATION NO. 8115
REGISTRATION # AA26000867

Approved | Date 05-22-06

DATE TIME FILE

PASSENGER STATIONS

NW 183RD ST. STATION B-LONGITUDINAL SECTION

Scale 1"=20' | Drawing PST-58 | Sheet 66

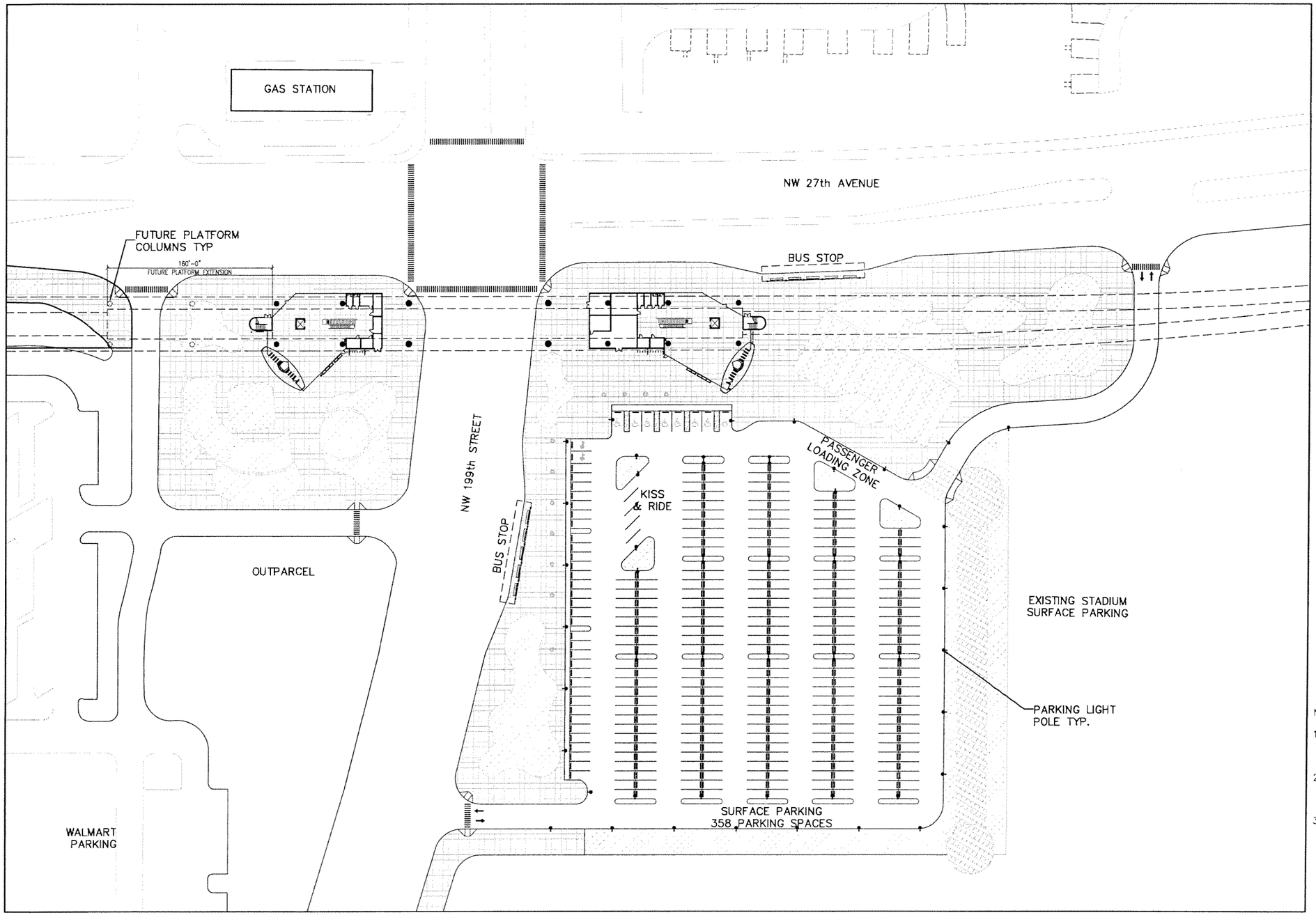

NOTE:

1. FOR GUIDEWAY COLUMN LOCATIONS OUTSIDE THE STATION LIMITS REFER TO GUIDEWAY STRUCTURE DRAWINGS.
2. ARCHITECTURAL SITEPLAN SHOWS CONFIGURATION OF GREEN AREAS ONLY, REFER TO LANDSCAPE DRAWINGS FOR DETAILS.
3. FINAL LOCATION FOR POWER SUBSTATION TO BE DETERMINED AFTER PRELIMINARY ENGINEERING PHASE.

0 25 50 100

SUBJECT TO CHANGE

Designed by ML	Date 5/06	No.	Date	By / Chk	App.	Revisions
		1	5/02/06			60% PROGRESS SET
		2	05/17/06			70% PROGRESS SET
Drawn by DR	Date 5/06	3	5/19/06			90% REVISED PROGRESS SET
		4	5/22/06			100% SUBMITTAL
Checked by ML	Date 5/06					
Approved by	Date					

NORTH CORRIDOR METRORAIL EXTENSION - PRELIMINARY ENGINEERING (100% SUBMITTAL)

MIAMI-DADE COUNTY

MIAMI-DADE TRANSIT

PARSONS
7600 CORPORATE CENTER DRIVE, SUITE 500
MIAMI, FLORIDA 33126
PHONE: (786) 464-1000 FAX: (786) 845-7119
CERTIFICATE OF AUTHORIZATION NO. 1838

Approved | Date

EARTHTECH
Transportation Services
architecture · engineering · construction
3750 NW 87th Avenue, Suite 300
Miami, Florida 33178-2430
CERTIFICATE OF AUTHORIZATION NO. 8115
REGISTRATION # AA26000097

Approved | Date 05-22-06

DATE TIME FILE

PASSENGER STATIONS

NW 199TH ST. STATION SITE PLAN

Scale 1" = 100' | Drawing PST-59 | Sheet 67

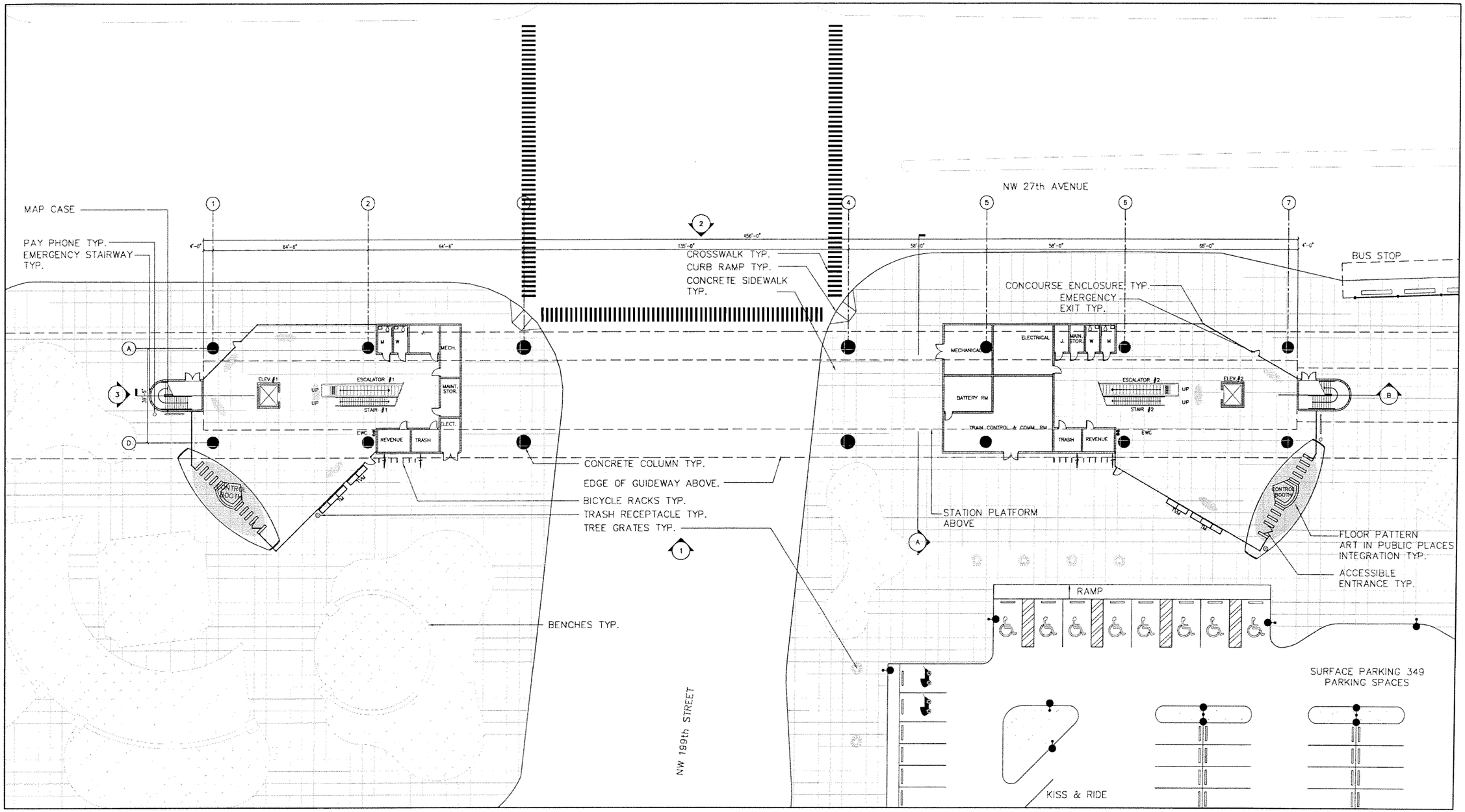

SUBJECT TO CHANGE

1	9/22/06				60% PROGRESS SET
2	10/17/06				70% PROGRESS SET
3	3/19/06				90% REVISED PROGRESS SET
4	5/22/06				100% SUBMITTAL

Designed by ML 5/06 Date
Drawn by DR 5/06 Date
Checked by ML 5/06 Date
Approved by Date

NORTH CORRIDOR METRORAIL EXTENSION - PRELIMINARY ENGINEERING (100% SUBMITTAL)

MIAMI-DADE COUNTY
MIAMI-DADE TRANSIT

PARSONS
7600 CORPORATE CENTER DRIVE, SUITE 500
MIAMI, FLORIDA 33126
PHONE: (786) 454-1000 FAX: (786) 845-7119
CERTIFICATE OF AUTHORIZATION NO. 1838
Approved Date

EARTHTECH
Transportation Services
architecture · engineering · construction
3750 NW 87th Avenue, Suite 300
Miami, Florida 33178-2428
CERTIFICATE OF AUTHORIZATION NO. 3115
REGISTRATION # AA26000697
Approved Date 05-22-06

DATE TIME FILE

PASSENGER STATIONS

NW 199TH ST. STATION PLAZA LEVEL PLAN

Scale 1"=40' Drawing PST-60 Sheet 68

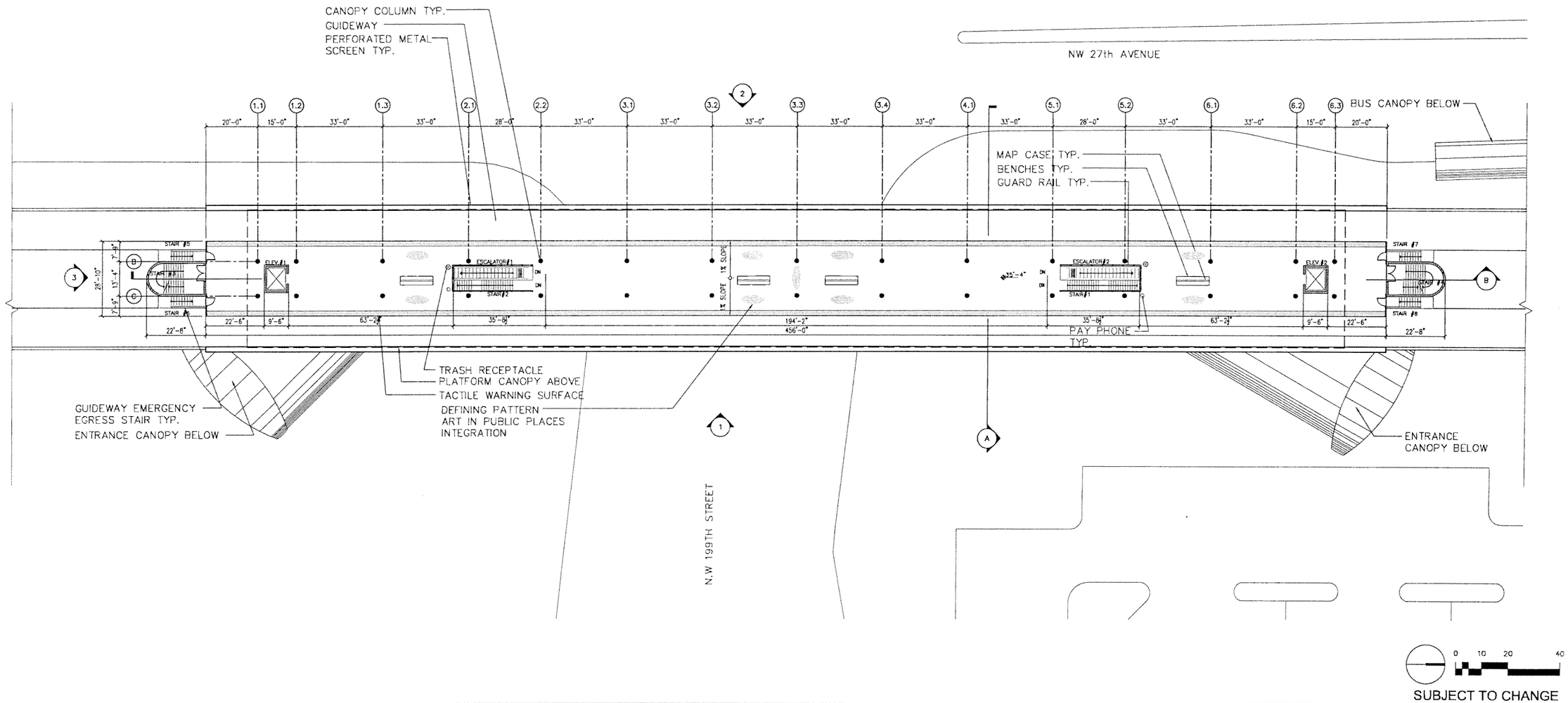

SUBJECT TO CHANGE

	No.	Date	By / Chk	App.	Revisions
Designed by ML 5/06 Date	1	9/22/05			60% PROGRESS SET
	2	10/17/05			70% PROGRESS SET
Drawn by DR 5/06 Date	3	3/10/06			90% REVISED PROGRESS SET
	4	5/22/06			100% SUBMITTAL
Checked by ML 5/06 Date					
Approved by Date					

NORTH CORRIDOR METRORAIL EXTENSION - PRELIMINARY ENGINEERING (100% SUBMITTAL)

MIAMI-DADE COUNTY

MIAMI-DADE TRANSIT

PARSONS
7600 CORPORATE CENTER DRIVE, SUITE 500
MIAMI, FLORIDA 33126
PHONE: (786) 464-1000 FAX: (786) 845-7119
CERTIFICATE OF AUTHORIZATION NO. 1835

Approved | Date

EARTHTECH
Transportation Services
architecture · engineering · construction
3750 NW 87th Avenue, Suite 300
Miami, Florida 33178-2430
CERTIFICATE OF AUTHORIZATION NO. 8115
REGISTRATION # AA26000897

Approved | Date 05-22-06

DATE TIME FILE

PASSENGER STATIONS

NW 199TH ST. STATION PLATFORM LEVEL PLAN

Scale 1" = 40' | Drawing PST-61 | Sheet 69

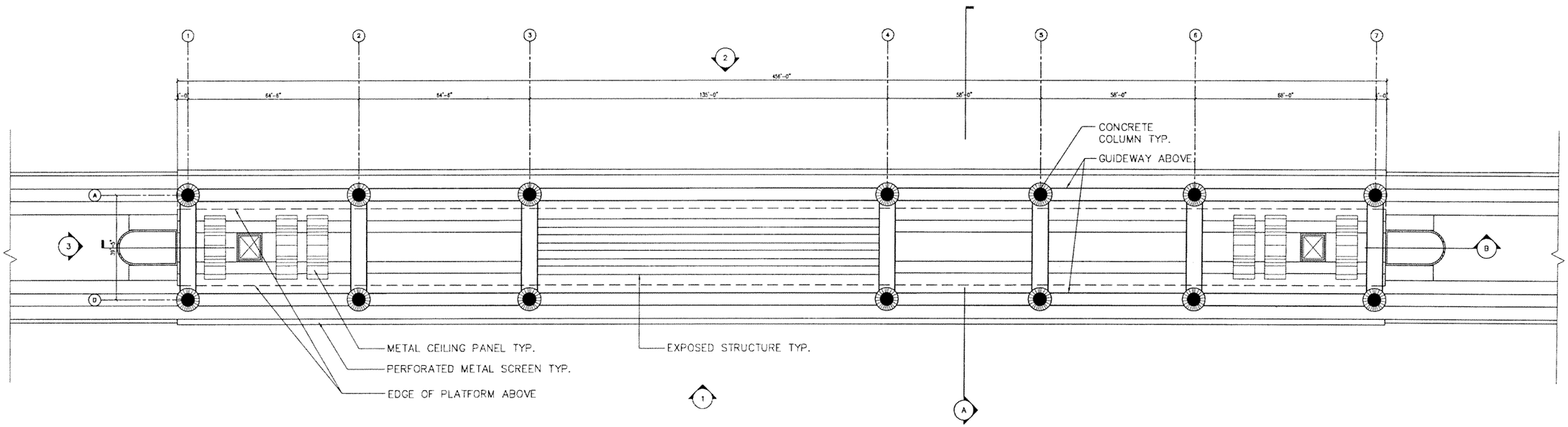

0 10 20 40

SUBJECT TO CHANGE

Designed by ML 5/06	1	9/02/05			60% PROGRESS SET
Drawn by DR 5/06	2	10/17/05			70% PROGRESS SET
Checked by ML 5/06	3	3/10/06			90% REVISED PROGRESS SET
	4	5/22/06			100% SUBMITTAL
Approved by Date	No.	Date	By / Chk	App.	Revisions

NORTH CORRIDOR METRORAIL EXTENSION - PREliminary ENGINEERING (100% SUBMITTAL)

MIAMI-DADE COUNTY

MIAMI-DADE TRANSIT

PARSONS
7600 CORPORATE CENTER DRIVE, SUITE 500
MIAMI, FLORIDA 33126
PHONE: (786) 464-1000 FAX: (786) 845-7119
CERTIFICATE OF AUTHORIZATION NO. 1838

Approved | Date

EARTHTECH
Transportation Services
architecture · engineering · construction
2750 NW 87th Avenue, Suite 300
Miami, Florida 33172-2420
CERTIFICATE OF AUTHORIZATION NO. 8195
REGISTRATION # AA26003387

Approved | Date 05-22-06

DATE TIME FILE

PASSENGER STATIONS

NW 199TH ST. STATION REFLECTED CEILING PLAN

Scale 1" = 40' | Drawing PST-62 | Sheet 10

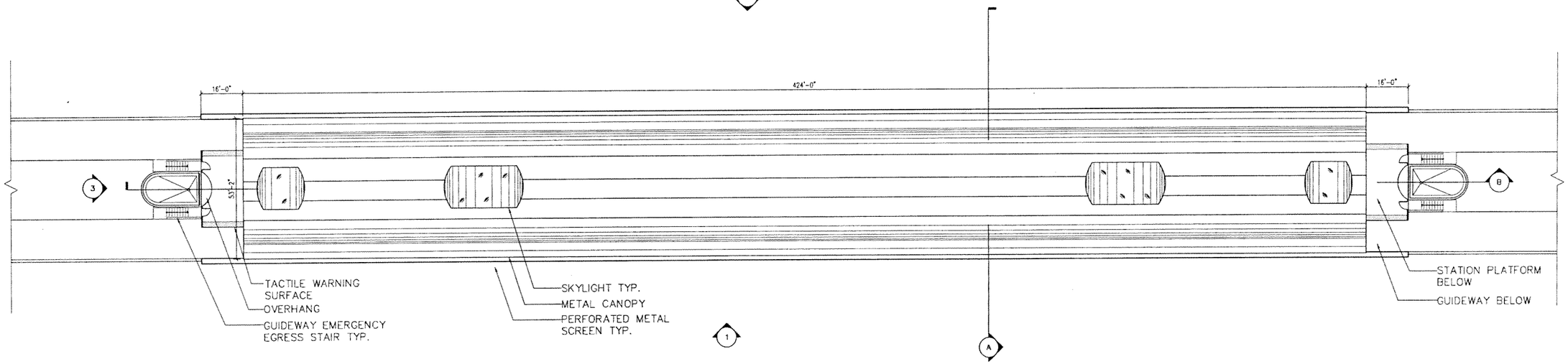

0 10 20 40

SUBJECT TO CHANGE

Designed by ML 5/06 Date	1	9/02/05			60% PROGRESS SET
	2	10/17/05			70% PROGRESS SET
Drawn by DR 5/06 Date	3	3/10/06			90% REVISED PROGRESS SET
	4	5/22/06			100% SUBMITTAL
Checked by ML 5/06 Date					
Approved by Date	No.	Date	By / Chk	App.	Revisions

NORTH CORRIDOR METRORAIL EXTENSION - PRELIMINARY ENGINEERING (100% SUBMITTAL)

MIAMI-DADE COUNTY

MIAMI-DADE TRANSIT

PARSONS
7600 CORPORATE CENTER DRIVE, SUITE 500
MIAMI, FLORIDA 33126
PHONE: (786) 464-1000 FAX: (786) 845-7119
CERTIFICATE OF AUTHORIZATION NO. 1838

Approved Date

EARTHTECH
Transportation Services
architecture · engineering · construction
3750 NW 87th Avenue, Suite 320
Miami, Florida 33178-2430
CERTIFICATE OF AUTHORIZATION NO. 8115
REGISTRATION # AA26000947

Approved Date 05-22-06

DATE TIME FILE

PASSENGER STATIONS

NW 199TH ST. STATION ROOF PLAN

Scale 1"=40' Drawing PST-63 Sheet 71

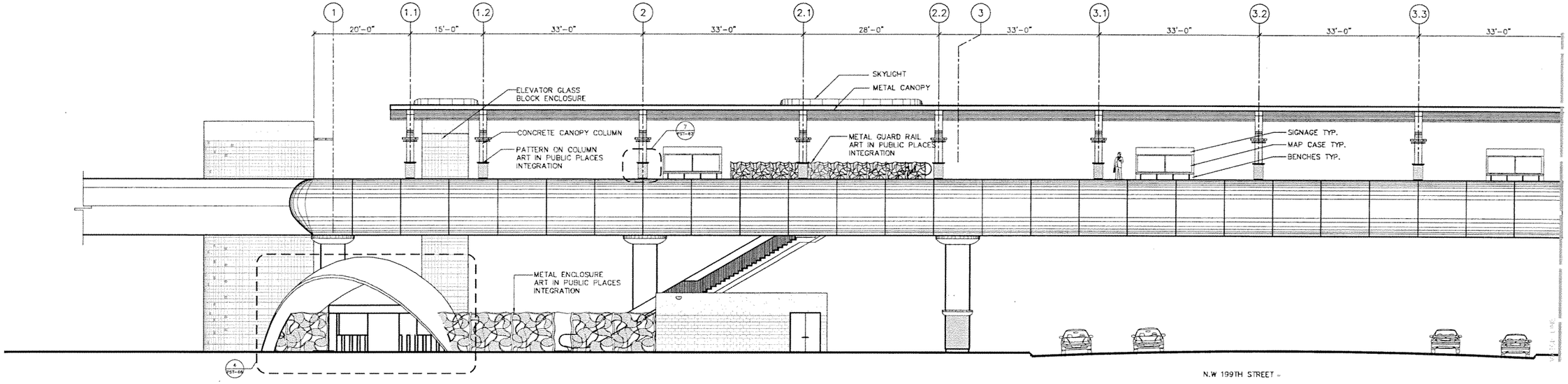

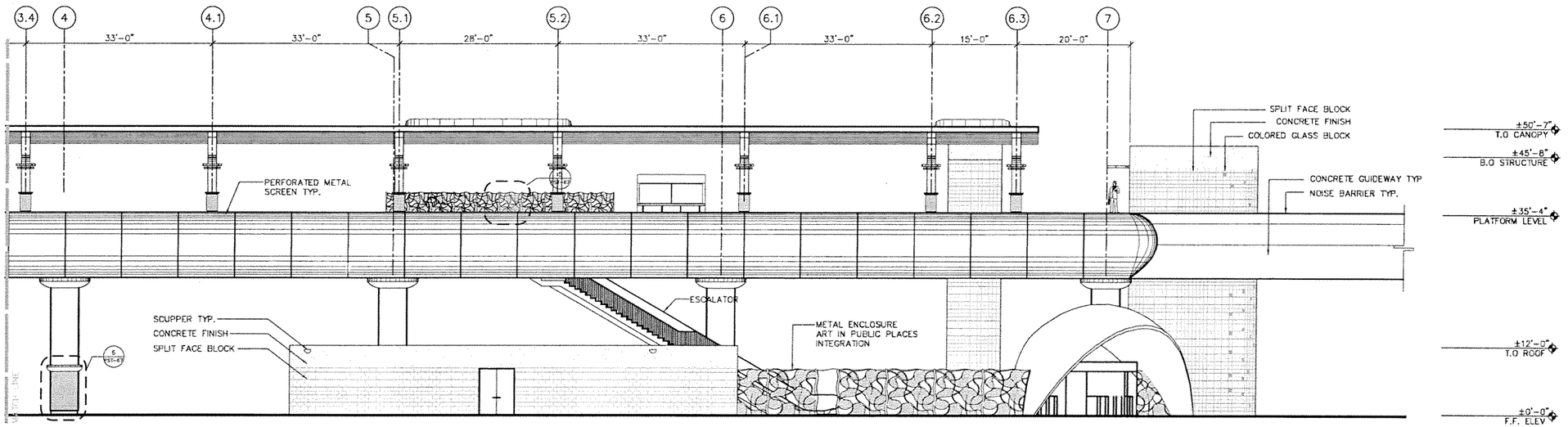

0 5 10 20

SUBJECT TO CHANGE

Designed by ML 5/06	1	9/02/05			60% PROGRESS SET
Drawn by DB 5/06	2	10/17/05			70% PROGRESS SET
Checked by ML 5/06	3	3/10/06			90% REVISED PROGRESS SET
	4	5/22/06			100% SUBMITTAL
Approved by Date	No.	Date	By / Chk	App.	Revisions

NORTH CORRIDOR METRORAIL EXTENSION - PRELIMINARY ENGINEERING (100% SUBMITTAL)

MIAMI-DADE COUNTY

MIAMI-DADE TRANSIT

PARSONS
7600 CORPORATE CENTER DRIVE, SUITE 500
MIAMI, FLORIDA 33126
PHONE: (786) 464-1000 FAX: (786) 845-7119
CERTIFICATE OF AUTHORIZATION NO. 1838

Approved | Date

EARTHTECH
Transportation Services
architecture · engineering · construction
3750 NW 87th Avenue, Suite 300
Miami, Florida 33178-2428
CERTIFICATE OF AUTHORIZATION NO. 8115
REGISTRATION # AA26000587

Approved | Date 05-22-06

DATE TIME FILE

PASSENGER STATIONS

NW 199TH ST. STATION
1- EAST ELEVATIONS

Scale 1" = 20' | Drawing PST-64 | Sheet 72

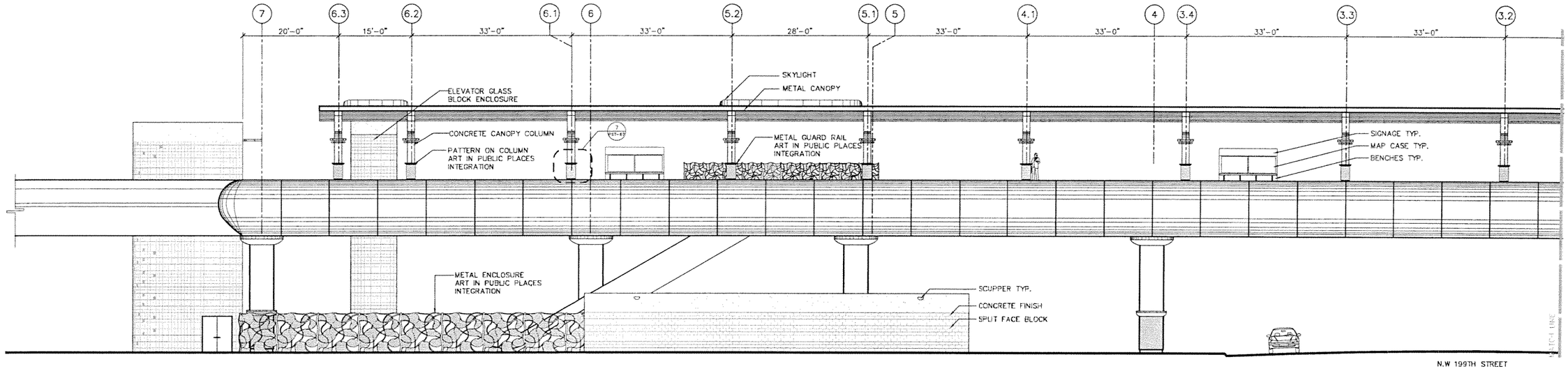

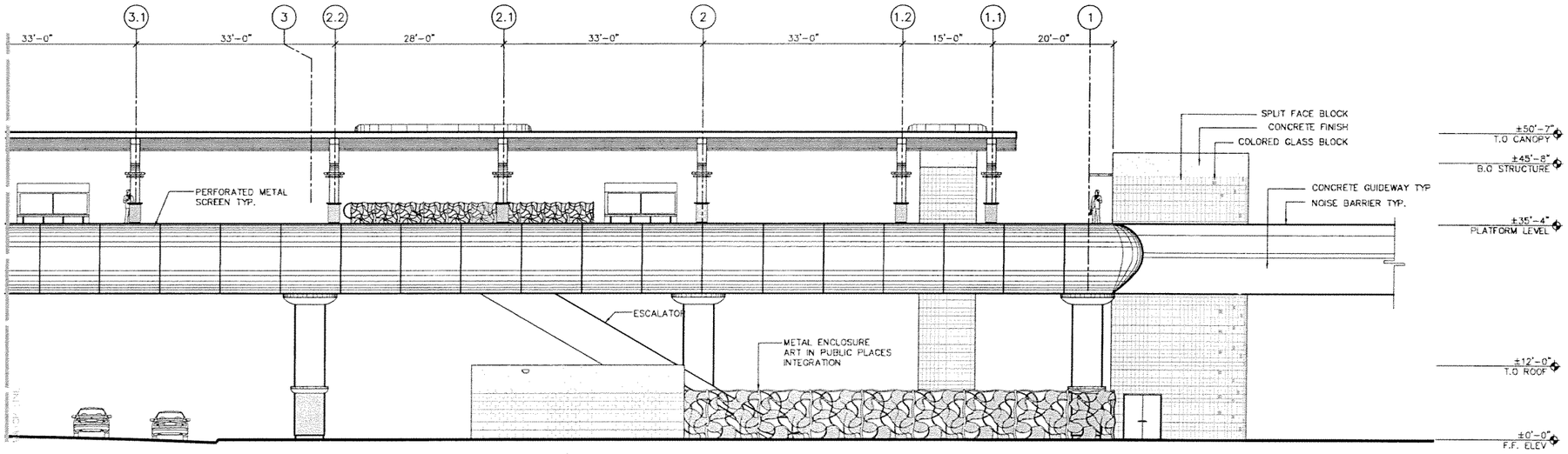

0 5' 11' 21'

SUBJECT TO CHANGE

Designed by ML 5/06 Date	1	9/02/05			60% PROGRESS SET
Drawn by DB 5/06 Date	2	10/17/05			70% PROGRESS SET
Checked by ML 5/06 Date	3	3/10/06			90% REVISED PROGRESS SET
	4	5/22/06			100% SUBMITTAL
Approved by Date	No.	Date	By / Chk	App.	Revisions

NORTH CORRIDOR METRORAIL EXTENSION - PRELIMINARY ENGINEERING (100% SUBMITTAL)

MIAMI-DADE COUNTY

MIAMI-DADE TRANSIT

PARSONS
7600 CORPORATE CENTER DRIVE, SUITE 500
MIAMI, FLORIDA 33126
PHONE: (786) 464-1000 FAX: (786) 845-7119
CERTIFICATE OF AUTHORIZATION NO. 1838

Approved | Date

EARTHTECH
Transportation Services
architecture · engineering · construction
3750 NW 87th Avenue, Suite 300
Miami, Florida 33178-2430
CERTIFICATE OF AUTHORIZATION NO. 8115
REGISTRATION # AA26000697

Approved | Date 05-22-06

DATE TIME FILE

PASSENGER STATIONS

NW 199TH ST. STATION 2- WEST ELEVATIONS

Scale 1" = 20' | Drawing PST-65 | Sheet 73

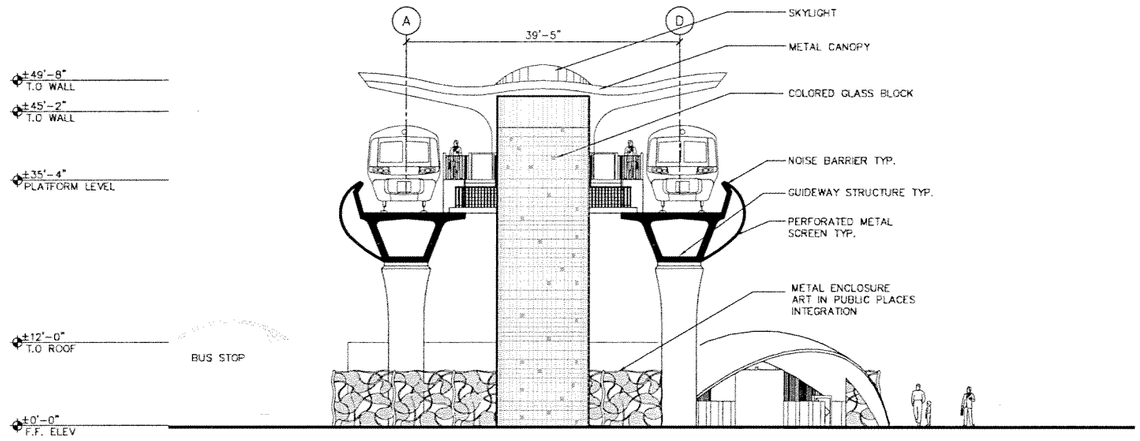

3-SOUTH ELEVATION

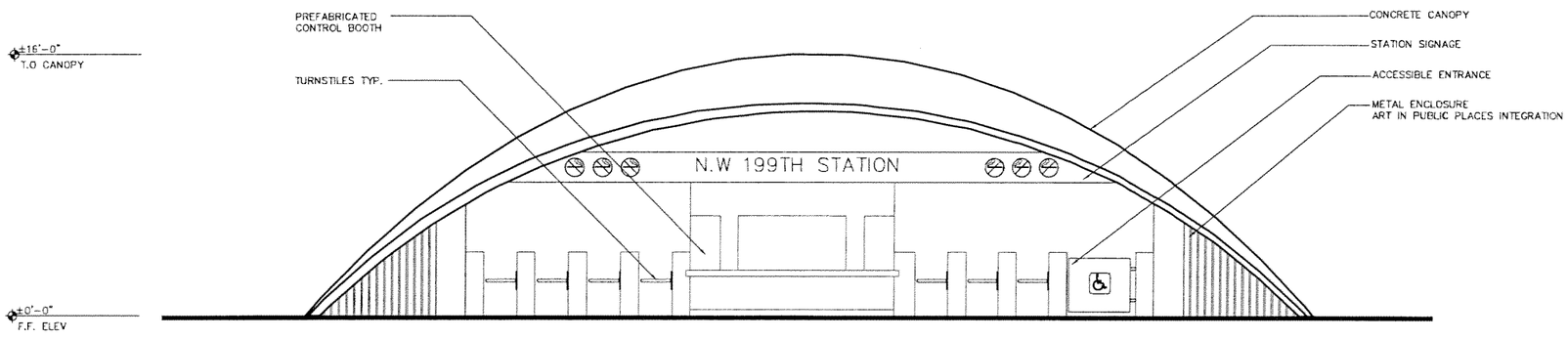

4-SOUTHEAST ELEVATION

SUBJECT TO CHANGE

Designed by ML	5/06 Date	1	9/02/05			60% PROGRESS SET
		2	10/17/05			70% PROGRESS SET
Drawn by DB	5/06 Date	3	3/10/06			90% REVISED PROGRESS SET
		4	5/22/06			100% SUBMITTAL
Checked by ML	5/06 Date					
Approved by	Date	No.	Date	By / Chk	App.	Revisions

NORTH CORRIDOR METRORAIL EXTENSION - PRELIMINARY ENGINEERING (100% SUBMITTAL)

MIAMI-DADE COUNTY

MIAMI-DADE TRANSIT

PARSONS
7600 CORPORATE CENTER DRIVE, SUITE 500
MIAMI, FLORIDA 33126
PHONE: (786) 464-1000 FAX: (786) 845-7119
CERTIFICATE OF AUTHORIZATION NO. 1838

Approved | Date

EARTHTECH
Transportation Services
architecture · engineering · construction
3750 NW 87th Avenue, Suite 300
Miami, Florida 33178-2430
CERTIFICATE OF AUTHORIZATION NO. 8115
REGISTRATION # AA26000687

Approved | Date 05-22-06

DATE TIME FILE

PASSENGER STATIONS

NW 199TH ST. STATION ELEVATIONS

Scale NTS | Drawing PST-66 | Sheet 74

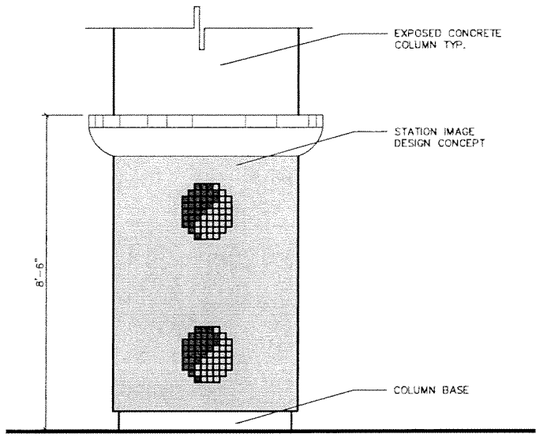

5-STATION DEFINING IMAGE
ON STATION/GUIDEWAY SUPPORT
COLUMNS

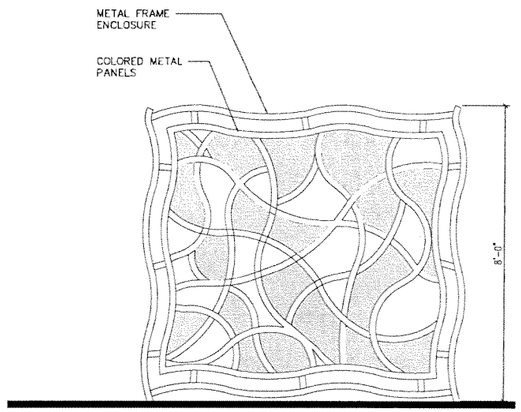

6-STATION DEFINING IMAGE ON
CONCOURSE & ESCALATOR
ENCLOSURE

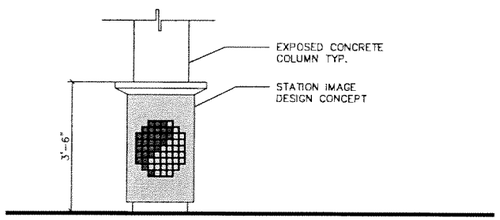

7-STATION DEFINING IMAGE
ON STATION COLUMNS

NOTE: FINAL DESIGN ON COLUMN AND ENCLOSURE
TO BE DETERMINED DURING FINAL DESIGN PHASE.

SUBJECT TO CHANGE

Designed by ML 5/06	1	5/02/06			60% PROGRESS SET
Drawn by DB 5/06	2	10/17/06			70% PROGRESS SET
Checked by ML 5/06	3	3/19/06			90% REVISED PROGRESS SET
	4	5/22/06			100% SUBMITTAL
Approved by Date	No.	Date	By / Chk	App.	Revisions

NORTH CORRIDOR METRORAIL EXTENSION - PRELIMINARY ENGINEERING (100% SUBMITTAL)

MIAMI-DADE COUNTY — MIAMI-DADE TRANSIT

PARSONS
7600 CORPORATE CENTER DRIVE, SUITE 500
MIAMI, FLORIDA 33126
PHONE: (786) 464-1000 FAX: (786) 845-7119
CERTIFICATE OF AUTHORIZATION NO. 1838

Approved | Date

EARTHTECH
Transportation Services
architecture · engineering · construction
2750 NW 87th Avenue, Suite 300
Miami, Florida 33172-2436
CERTIFICATE OF AUTHORIZATION NO. 8115
REGISTRATION # AA26000397

Approved | Date 05-22-06

DATE TIME FILE

PASSENGER STATIONS

NW 199TH ST. STATION ELEVATIONS

Scale NTS | Drawing PST-67 | Sheet 75

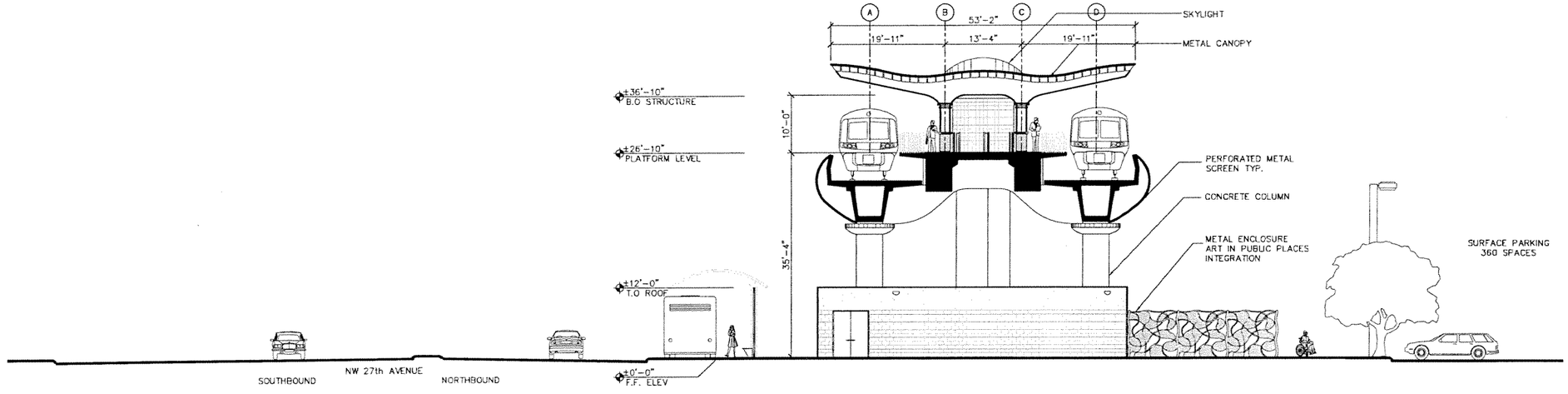

SECTION LOOKING NORTH

0 5 10 20

SUBJECT TO CHANGE

Designed by ML 5/06	1	9/02/05			60% PROGRESS SET
Drawn by DB 5/06	2	10/17/05			70% PROGRESS SET
Checked by ML 5/06	3	3/10/06			90% REVISED PROGRESS SET
	4	5/22/06			100% SUBMITTAL
Approved by Date	No.	Date	By / Chk	App.	Revisions

NORTH CORRIDOR METRORAIL EXTENSION - PRELIMINARY ENGINEERING (100% SUBMITTAL)

MIAMI-DADE COUNTY

MIAMI-DADE TRANSIT

PARSONS
7600 CORPORATE CENTER DRIVE, SUITE 500
MIAMI, FLORIDA 33126
PHONE: (786) 464-1000 FAX: (786) 845-7119
CERTIFICATE OF AUTHORIZATION NO. 1838

Approved | Date

EARTHTECH
Transportation Services
architecture · engineering · construction
3750 NW 87th Avenue, Suite 300
Miami, Florida 33178-2428
CERTIFICATE OF AUTHORIZATION NO. 8115
REGISTRATION # AA26002067

Approved | Date 05-22-06

DATE TIME FILE

PASSENGER STATIONS

NW 199TH ST. STATION A- CROSS SECTION

Scale 1" = 20' | Drawing PST- 68 | Sheet 76

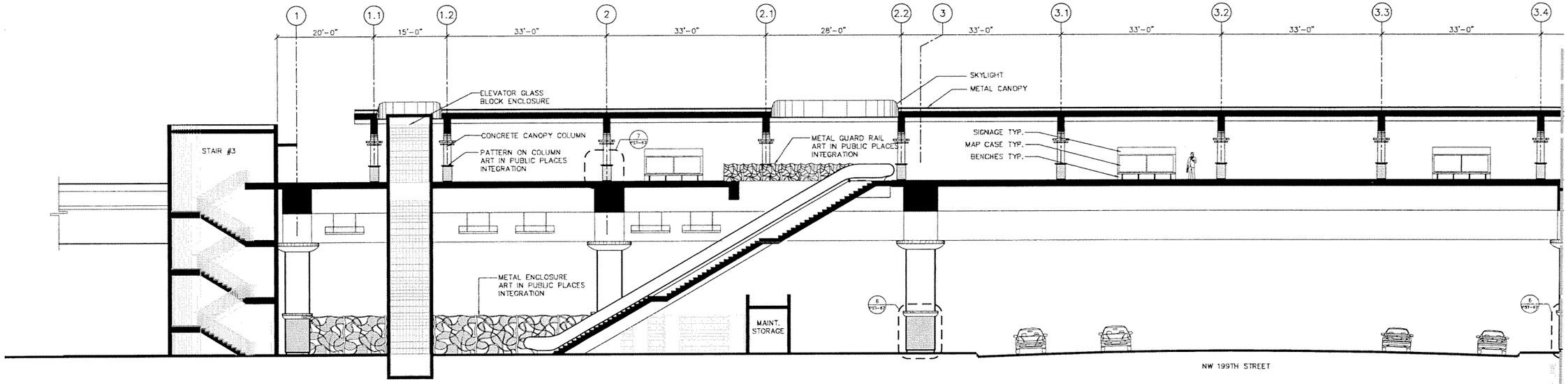

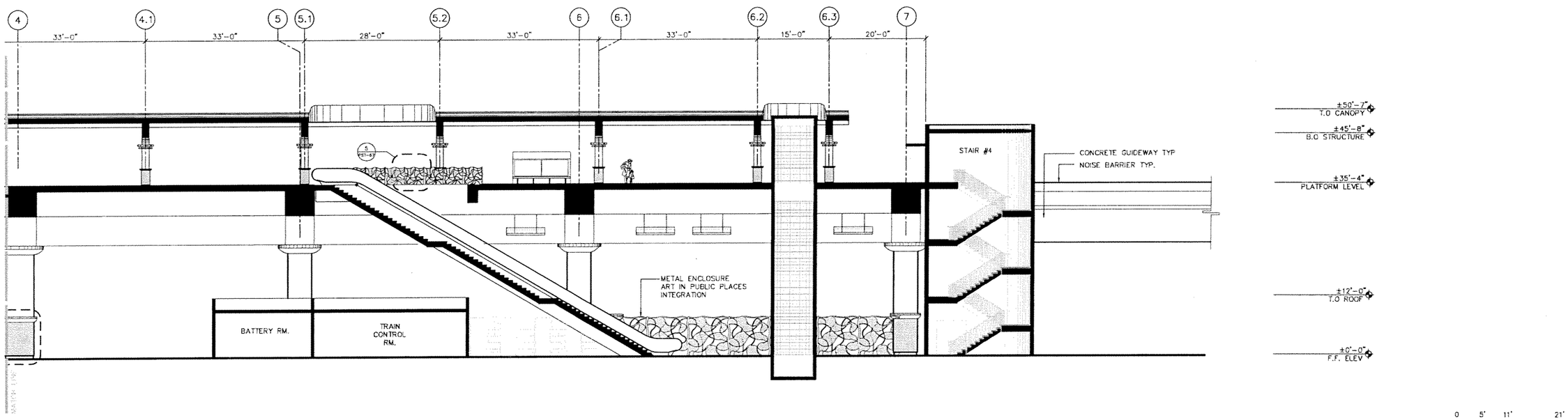

SECTION LOOKING WEST

0 5' 11' 21'

SUBJECT TO CHANGE

Designed by ML 5/06	No.	Date	By/Chk	App.	Revisions
Drawn by DB 5/06	1	9/02/05			60% PROGRESS SET
Checked by ML 5/06	2	10/17/05			70% PROGRESS SET
Approved by Date	3	3/10/06			90% REVISED PROGRESS SET
	4	5/22/06			100% SUBMITTAL

NORTH CORRIDOR METRORAIL EXTENSION - PRELIMINARY ENGINEERING (100% SUBMITTAL)

MIAMI-DADE COUNTY

MIAMI-DADE TRANSIT

PARSONS
7600 CORPORATE CENTER DRIVE, SUITE 500
MIAMI, FLORIDA 33126
PHONE: (786) 464-1000 FAX: (786) 845-7119
CERTIFICATE OF AUTHORIZATION NO. 1838

Approved | Date

EARTH TECH
Transportation Services
architecture · engineering · construction
3750 NW 87th Avenue, Suite 300
Miami, Florida 33178-2428
CERTIFICATE OF AUTHORIZATION NO. 8115
REGISTRATION # AA26000697

Approved | Date 05-22-06

DATE TIME FILE

PASSENGER STATIONS

NW 199TH ST. STATION B-LONGITUDINAL SECTION

Scale 1" = 20' | Drawing PST- 69 | Sheet 77

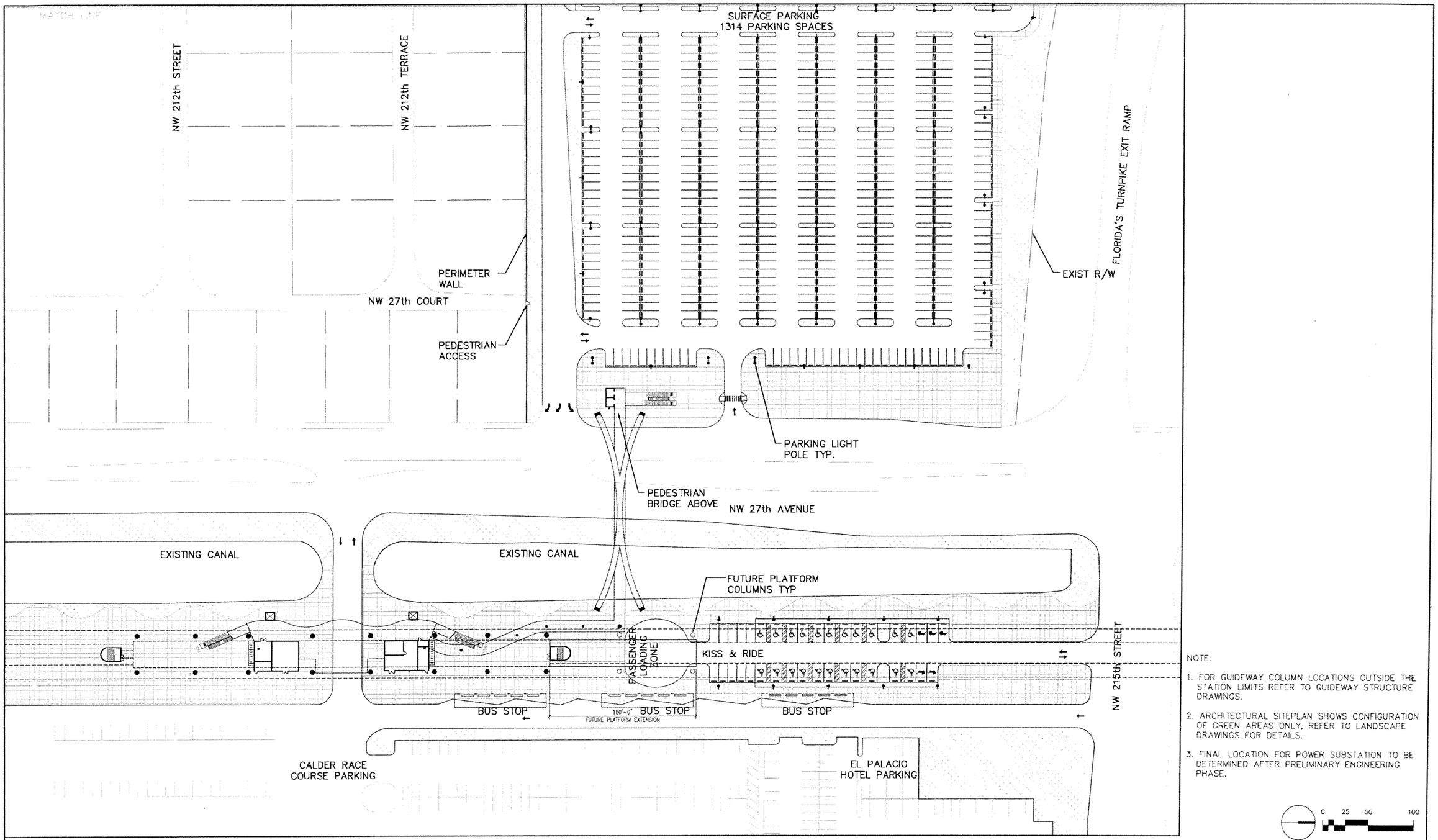

NOTE:

1. FOR GUIDEWAY COLUMN LOCATIONS OUTSIDE THE STATION LIMITS REFER TO GUIDEWAY STRUCTURE DRAWINGS.
2. ARCHITECTURAL SITEPLAN SHOWS CONFIGURATION OF GREEN AREAS ONLY, REFER TO LANDSCAPE DRAWINGS FOR DETAILS.
3. FINAL LOCATION FOR POWER SUBSTATION TO BE DETERMINED AFTER PRELIMINARY ENGINEERING PHASE.

0 25 50 100

SUBJECT TO CHANGE

Designed by ML 5/06	1	6/02/05			60% PROGRESS SET
Drawn by ER 5/06	2	10/17/05			70% PROGRESS SET
Checked by ML 5/06	3	3/10/06			90% REVISED PROGRESS SET
	4	5/22/06			100% SUBMITTAL
Approved by Date	No.	Date	By Chk	App.	Revisions

NORTH CORRIDOR METRORAIL EXTENSION - PRELIMINARY ENGINEERING (100% SUBMITTAL)

MIAMI-DADE COUNTY

MIAMI-DADE TRANSIT

PARSONS
7600 CORPORATE CENTER DRIVE, SUITE 500
MIAMI, FLORIDA 33126
PHONE: (786) 464-1000 FAX: (786) 845-7119
CERTIFICATE OF AUTHORIZATION NO. 1838

Approved | Date

EARTHTECH
Transportation Services
architecture · engineering · construction
3730 NW 87th Avenue, Suite 300
Miami, Florida 33178-2430
CERTIFICATE OF AUTHORIZATION NO. 8115
REGISTRATION # AA26000997

Approved | Date 05-22-06

DATE TIME FILE

PASSENGER STATIONS

NW 215TH ST. STATION SITE PLAN

Scale 1" = 100' | Drawing PST-70A | Sheet 78

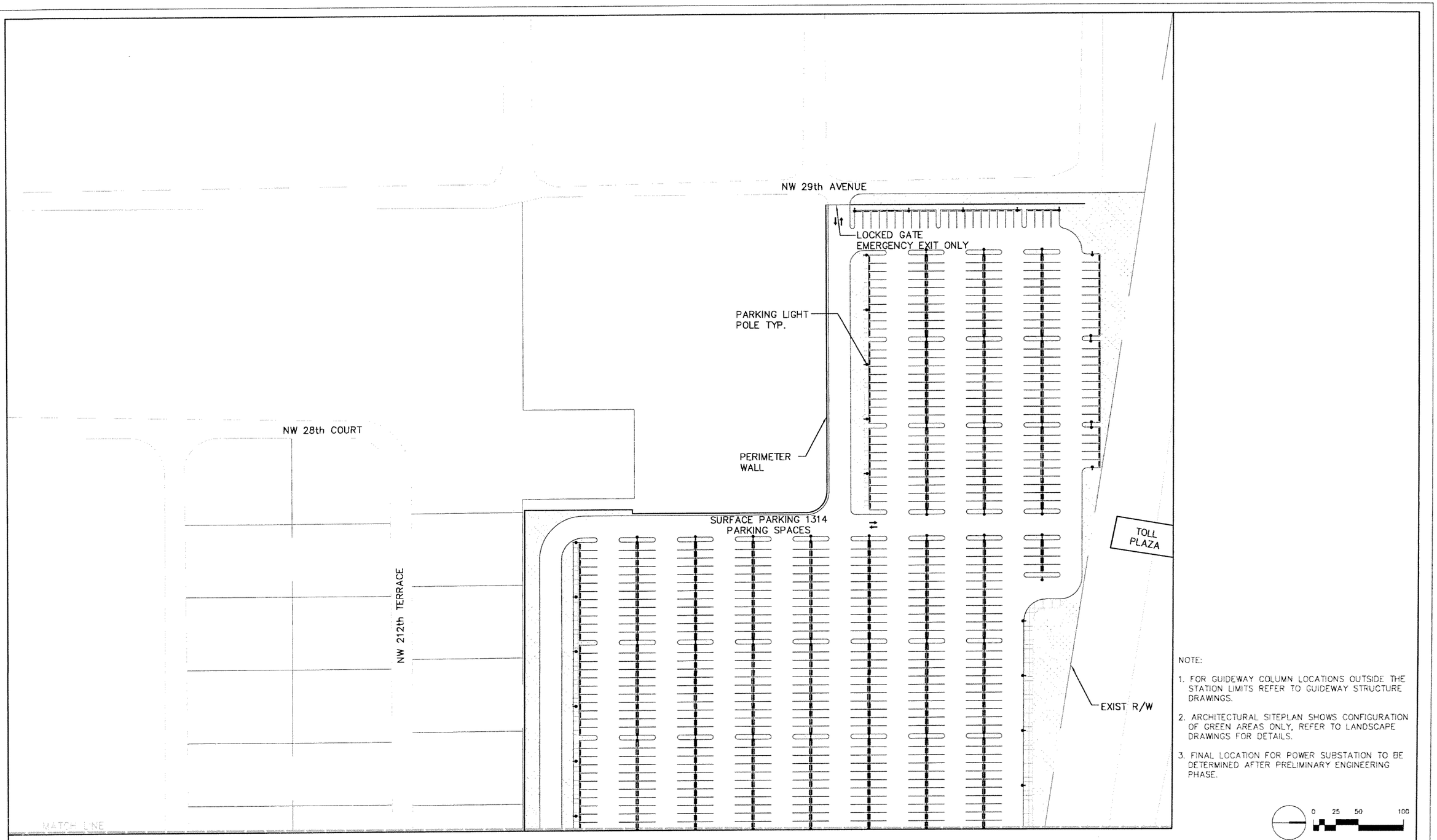

NOTE:

1. FOR GUIDEWAY COLUMN LOCATIONS OUTSIDE THE STATION LIMITS REFER TO GUIDEWAY STRUCTURE DRAWINGS.
2. ARCHITECTURAL SITEPLAN SHOWS CONFIGURATION OF GREEN AREAS ONLY, REFER TO LANDSCAPE DRAWINGS FOR DETAILS.
3. FINAL LOCATION FOR POWER SUBSTATION TO BE DETERMINED AFTER PRELIMINARY ENGINEERING PHASE.

0 25 50 100

SUBJECT TO CHANGE

Designed by ML 5/06	1	9/02/05			60% PROGRESS SET
Drawn by ER 5/06	2	10/17/05			70% PROGRESS SET
Checked by ML 5/06	3	3/15/06			90% REVISED PROGRESS SET
	4	5/22/06			100% SUBMITTAL
Approved by Date	No.	Date	By / Chk	App.	Revisions

NORTH CORRIDOR METRORAIL EXTENSION - PRELIMINARY ENGINEERING (100% SUBMITTAL)

MIAMI-DADE COUNTY

MIAMI-DADE TRANSIT

PARSONS
7600 CORPORATE CENTER DRIVE, SUITE 500
MIAMI, FLORIDA 33126
PHONE: (786) 464-1000 FAX: (786) 845-7119
CERTIFICATE OF AUTHORIZATION NO. 1838

Approved | Date

EARTHTECH
Transportation Services
architecture · engineering · construction
3750 NW 87th Avenue, Suite 300
Miami, Florida 33178-2408
CERTIFICATE OF AUTHORIZATION NO. 8116
REGISTRATION # AA26002867

Approved | Date 05-22-06

DATE TIME FILE

PASSENGER STATIONS

NW 215TH ST. STATION SITE PLAN -cont'd

Scale 1" = 100' | Drawing PST-70B | Sheet 79

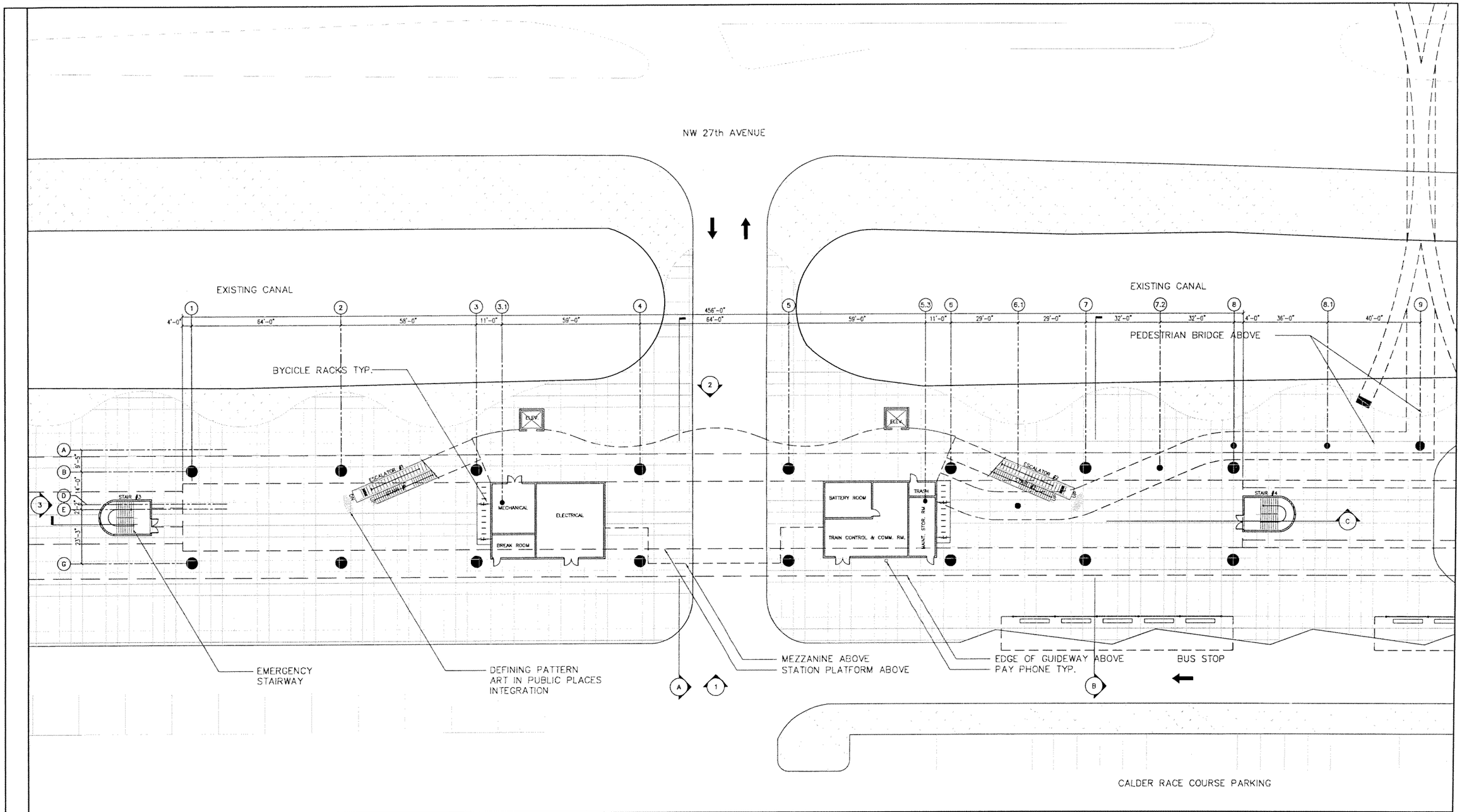

Designed by ML 5/06 Date	1	9/02/05				60% PROGRESS SET
Drawn by ER 5/06 Date	2	10/17/05				70% PROGRESS SET
Checked by ML 5/06 Date	3	3/10/06				90% REVISED PROGRESS SET
	4	5/22/06				100% SUBMITTAL
Approved by Date	No.	Date	By / Chk	App.	Revisions	

NORTH CORRIDOR METRORAIL EXTENSION - PRELIMINARY ENGINEERING (100% SUBMITTAL)

MIAMI-DADE COUNTY

MIAMI-DADE TRANSIT

PARSONS
7600 CORPORATE CENTER DRIVE, SUITE 500
MIAMI, FLORIDA 33126
PHONE: (786) 464-1000 FAX: (786) 645-7119
CERTIFICATE OF AUTHORIZATION NO. 1838

Approved | Date

EARTHTECH
Transportation Services
architecture · engineering · construction
3750 NW 87th Avenue, Suite 300
Miami, Florida 33178-2430
CERTIFICATE OF AUTHORIZATION NO. 8115
REGISTRATION # AA26000867

Approved | Date 05-22-06

DATE TIME FILE

PASSENGER STATIONS

NW 215TH ST. STATION PLAZA LEVEL PLAN

Scale 1"=40' | Drawing PST-71 | Sheet 90

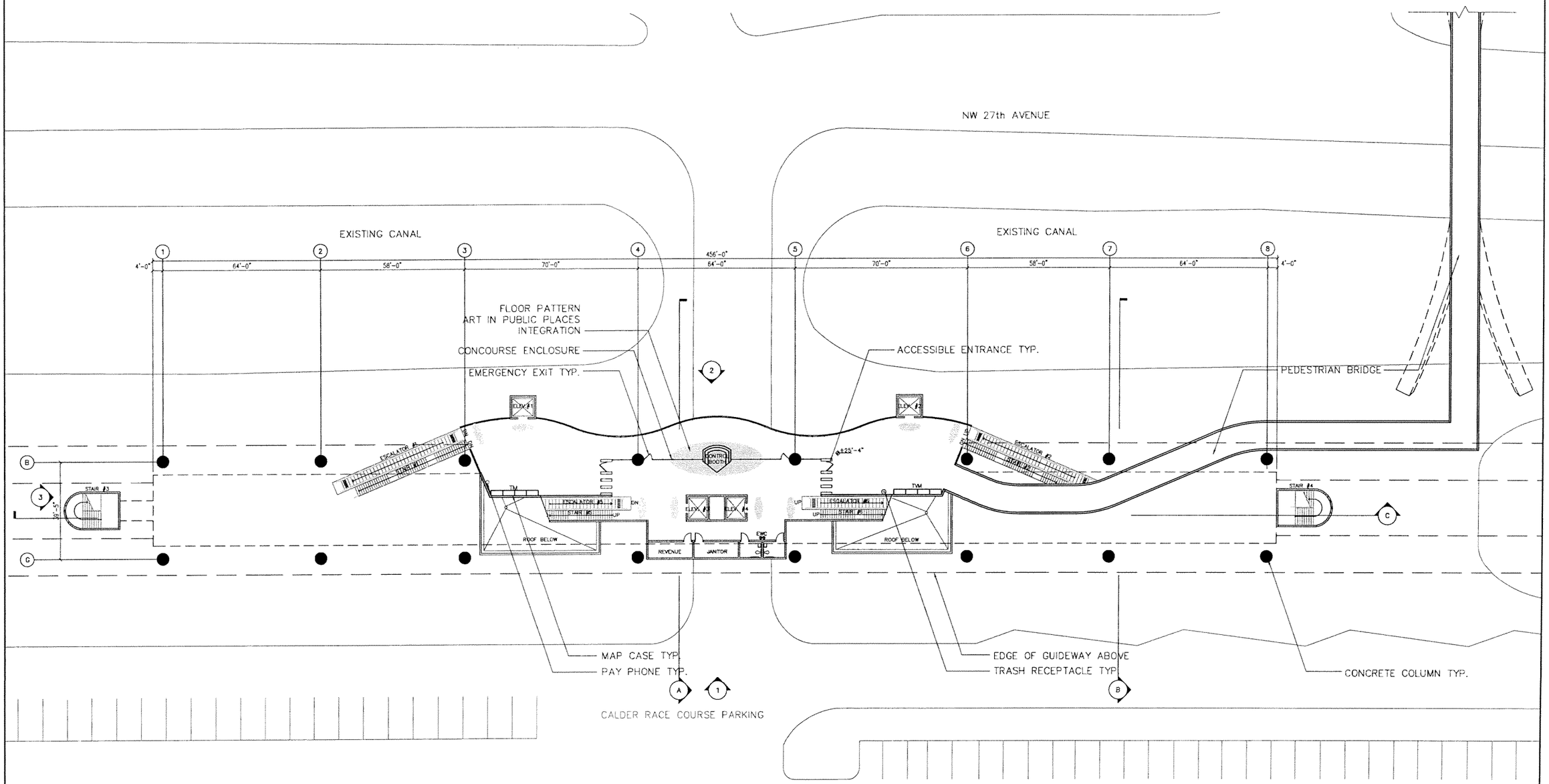

SUBJECT TO CHANGE

Designed by ML 5/06	1	5/02/05			60% PROGRESS SET
Drawn by ER 5/06	2	10/17/05			70% PROGRESS SET
Checked by ML 5/06	3	3/10/06			90% REVISED PROGRESS SET
Approved by Date	4	5/22/06			100% SUBMITTAL
	No.	Date	By / Chk	App.	Revisions

NORTH CORRIDOR METRORAIL EXTENSION - PRELIMINARY ENGINEERING (100% SUBMITTAL)

MIAMI-DADE COUNTY

MIAMI-DADE TRANSIT

PARSONS
7600 CORPORATE CENTER DRIVE, SUITE 500
MIAMI, FLORIDA 33126
PHONE: (786) 464-1000 FAX: (786) 845-7119
CERTIFICATE OF AUTHORIZATION NO. 1836

Approved | Date

EARTHTECH
Transportation Services
architecture · engineering · construction
3750 NW 87th Avenue, Suite 300
Miami, Florida 33178-2428
CERTIFICATE OF AUTHORIZATION NO. #116
REGISTRATION # AA26000967

Approved | Date: 05-22-06

DATE | TIME | FILE

PASSENGER STATIONS

NW 215TH ST. STATION MEZZANINE PLAN

Scale 1" = 40' | Drawing PST-72 | Sheet 91

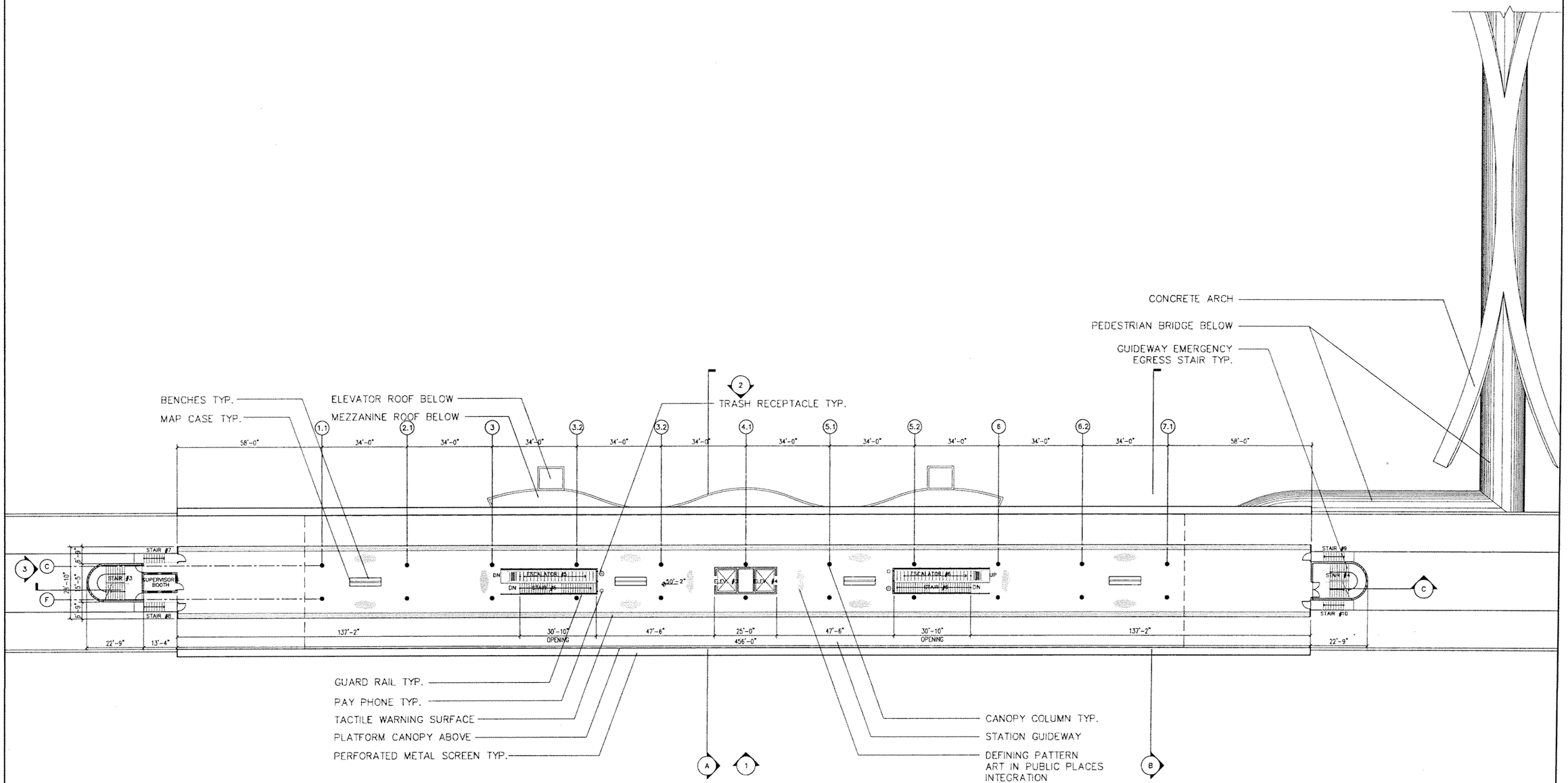

SUBJECT TO CHANGE

Designed by ML 5/06	1	9/02/05			60% PROGRESS SET
Drawn by ER 5/06	2	10/17/05			70% PROGRESS SET
Checked by ML 5/06	3	3/15/06			90% REVISED PROGRESS SET
	4	5/22/06			100% SUBMITTAL
Approved by Date	No.	Date	By / Chk.	App.	Revisions

NORTH CORRIDOR METRORAIL EXTENSION - PRELIMINARY ENGINEERING (100% SUBMITTAL)

MIAMI-DADE COUNTY

MIAMI-DADE TRANSIT

PARSONS
7600 CORPORATE CENTER DRIVE, SUITE 500
MIAMI, FLORIDA 33126
PHONE: (786) 464-1000 FAX: (786) 845-7119
CERTIFICATE OF AUTHORIZATION NO. 1836

Approved | Date

EARTHTECH
Transportation Services
architecture · engineering · construction
3750 NW 87th Avenue, Suite 300
Miami, Florida 33178-2428
CERTIFICATE OF AUTHORIZATION NO. 2116
REGISTRATION # AA26000947

Approved | Date 05-22-06

DATE | TIME | FILE

PASSENGER STATIONS

NW 215TH ST. STATION PLATFORM PLAN

Scale 1" = 40' | Drawing PST-73 | Sheet 82

NOT USED
SUBJECT TO CHANGE

Designed by ML 5/06	1	5/02/06			60% PROGRESS SET
Drawn by ER 5/06	2	5/17/06			70% PROGRESS SET
Checked by ML 5/06	3	5/19/06			90% REVISED PROGRESS SET
Approved by	4	5/22/06			100% SUBMITTAL
	No.	Date	By CN	App.	Revisions

NORTH CORRIDOR METRORAIL EXTENSION - PRELIMINARY ENGINEERING (100% SUBMITTAL)

MIAMI-DADE COUNTY
MIAMI-DADE TRANSIT

PARSONS
7600 CORPORATE CENTER DRIVE, SUITE 500
MIAMI, FLORIDA 33126
PHONE: (786) 454-1000 FAX: (786) 845-7119
CERTIFICATE OF AUTHORIZATION NO. 1838

Approved | Date

EARTH TECH
Transportation Services
architecture · engineering · construction
CERTIFICATE OF AUTHORIZATION NO. 8116
REGISTRATION # AA26000687

Approved | Date 05-22-06

DATE TIME FILE

PASSENGER STATIONS

NW 215TH ST. STATION REFLECTED CEILING PLAN

Scale NTS | Drawing PST-74 | Sheet 93

NOT USED
SUBJECT TO CHANGE

Designed by ML 5/06 Date	1	5-02-05			60% PROGRESS SET
	2	10-11-05			70% PROGRESS SET
Drawn by ER 5/06 Date	3	5-10-06			90% REVISED PROGRESS SET
	4	5-22-06			100% SUBMITTAL
Checked by ML 5/06 Date					
Approved by Date	No	Date	By / Chk	App	Revisions

NORTH CORRIDOR METRORAIL EXTENSION - PRELIMINARY ENGINEERING (100% SUBMITTAL)

MIAMI-DADE COUNTY

MIAMI-DADE TRANSIT

PARSONS
7600 CORPORATE CENTER DRIVE, SUITE 500
MIAMI, FLORIDA 33126
PHONE: (786) 464-1000 FAX: (786) 845-7119
CERTIFICATE OF AUTHORIZATION NO. 1838

Approved | Date

EARTH TECH
Transportation Services
architecture · engineering · construction

Approved | Date 05-22-06

DATE TIME FILE

PASSENGER STATIONS

NW 215TH ST. STATION REFLECTED CEILING PLAN

Scale | Drawing PST-75 | Sheet 84

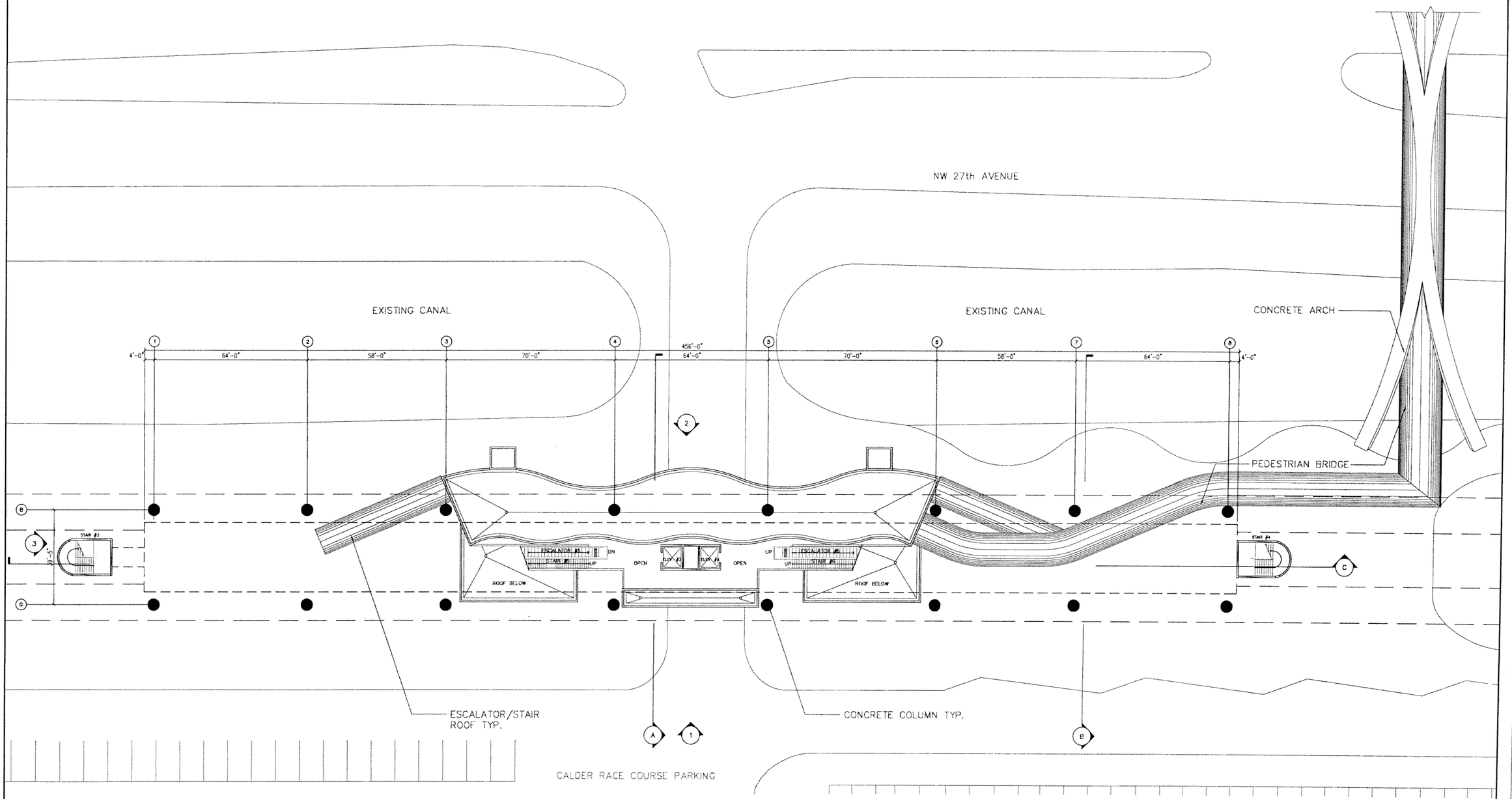

Designed by ML 5/06 Date	1	9/02/05				60% PROGRESS SET
Drawn by ER 5/06 Date	2	10/17/05				70% PROGRESS SET
Checked by ML 5/06 Date	3	3/10/06				90% REVISED PROGRESS SET
	4	5/22/06				100% SUBMITTAL
Approved by Date	No.	Date	By / Chk	App.	Revisions	

NORTH CORRIDOR METRORAIL EXTENSION - PRELIMINARY ENGINEERING (100% SUBMITTAL)

MIAMI-DADE COUNTY

MIAMI-DADE TRANSIT

PARSONS
7600 CORPORATE CENTER DRIVE, SUITE 500
MIAMI, FLORIDA 33126
PHONE: (786) 464-1000 FAX: (786) 845-7119
CERTIFICATE OF AUTHORIZATION NO. 1838

Approved Date

EARTHTECH
Transportation Services
architecture · engineering · construction
1750 NW 87th Avenue, Suite 201
Miami, Florida 33178-2430
CERTIFICATE OF AUTHORIZATION NO. 9116
REGISTRATION # AA26000887

Approved Date 05-22-06

DATE TIME FILE

PASSENGER STATIONS

NW 215TH ST. STATION MEZZANINE ROOF PLAN

Scale 1"=40' Drawing PST-76 Sheet 85

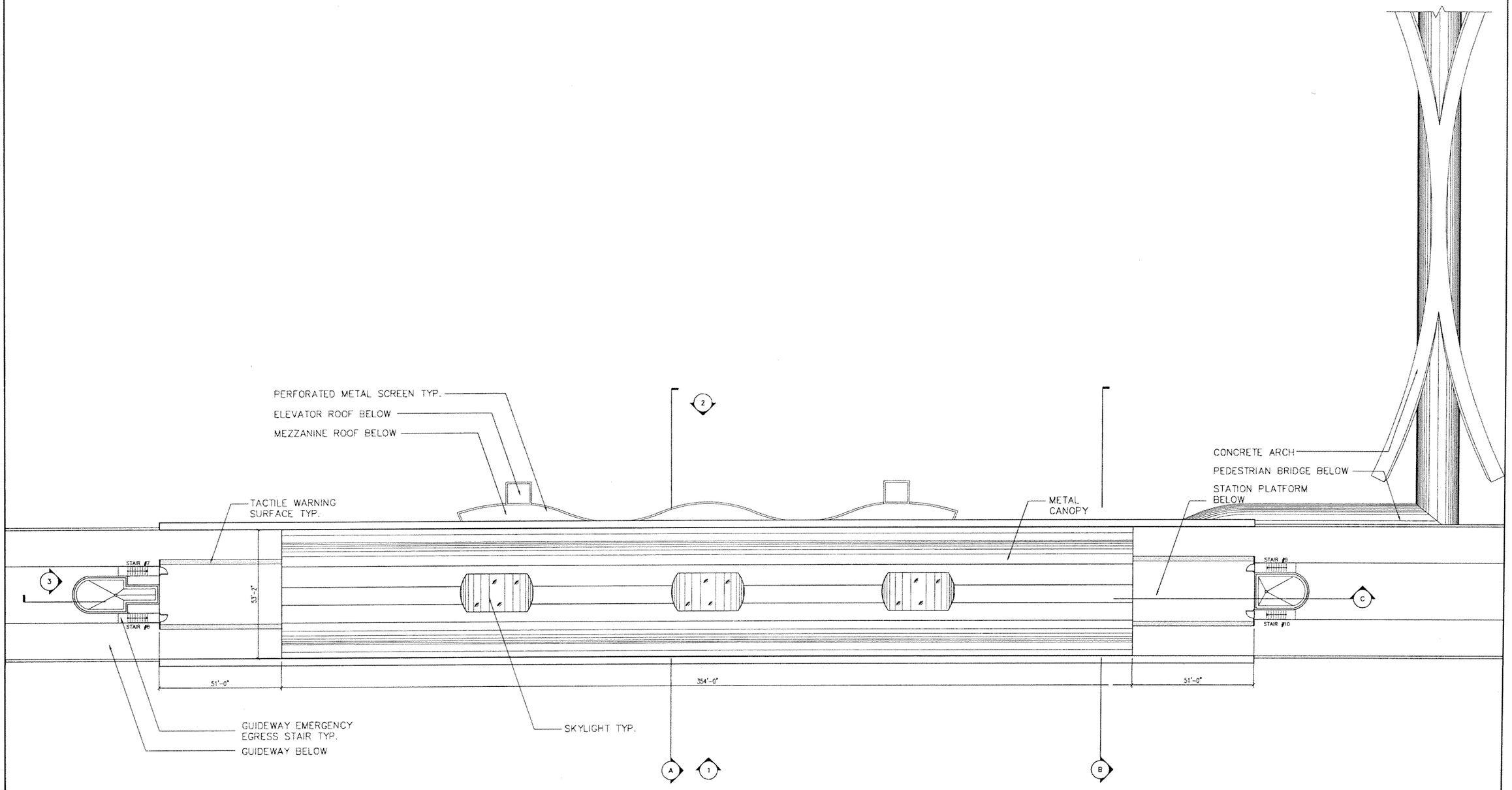

Designed by ML 5/06	1	9/02/05			60% PROGRESS SET
Drawn by ER 5/06	2	10/17/05			70% PROGRESS SET
Checked by ML 5/06	3	3/10/06			90% REVISED PROGRESS SET
	4	5/22/06			100% SUBMITTAL
Approved by Date	No.	Date	By	App.	Revisions

NORTH CORRIDOR METRORAIL EXTENSION - PRELIMINARY ENGINEERING (100% SUBMITTAL)

MIAMI-DADE COUNTY

MIAMI-DADE TRANSIT

PARSONS
7600 CORPORATE CENTER DRIVE, SUITE 500
MIAMI, FLORIDA 33126
PHONE: (786) 464-1000 FAX: (786) 845-7119
CERTIFICATE OF AUTHORIZATION NO. 1838

Approved | Date

EARTHTECH
Transportation Services
architecture · engineering · construction
7780 NW 97th. Avenue, Suite 300
Miami, Florida 33178-2630
CERTIFICATE OF AUTHORIZATION NO. 8116
REGISTRATION # AA26000667

Approved | Date 05-22-06

DATE TIME FILE

PASSENGER STATIONS

NW 215TH ST. STATION ROOF PLAN

Scale 1" = 40' | Drawing PST-77 | Sheet 86

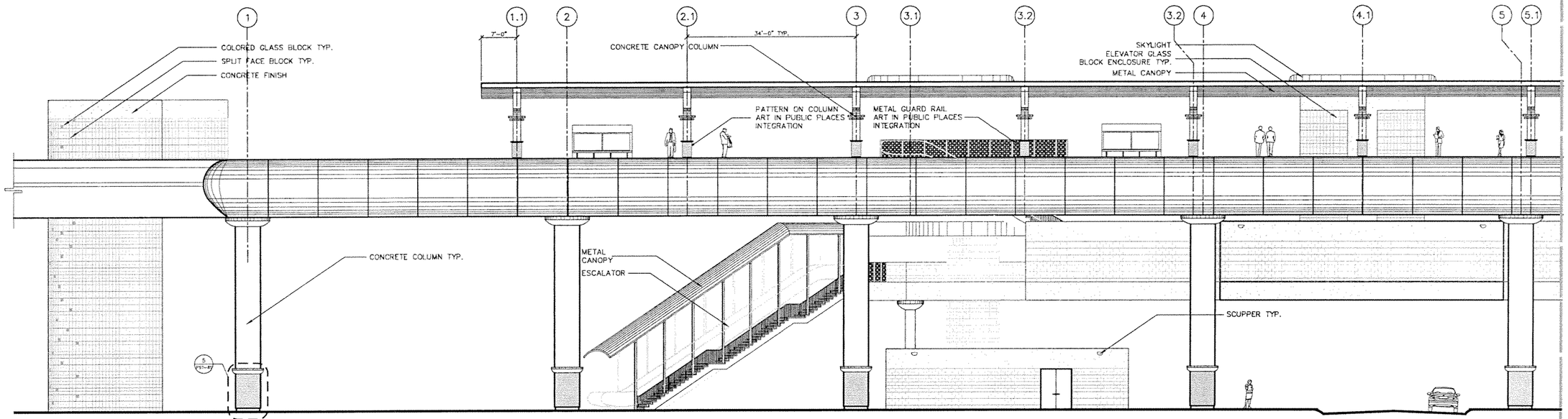

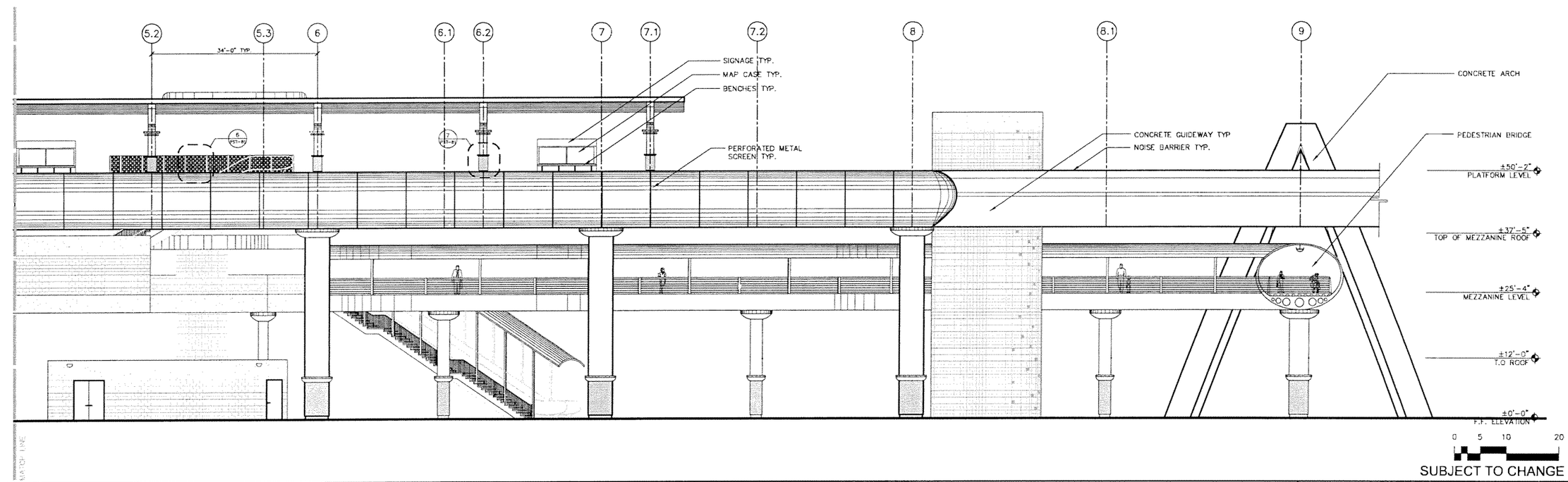

Designed by ML 5/06	No.	Date	By / Chk	App.	Revisions
Drawn by ER 5/06	1	9/02/05			60% PROGRESS SET
Checked by ML 5/06	2	10/17/05			70% PROGRESS SET
Approved by Date	3	3/13/06			90% REVISED PROGRESS SET
	4	5/22/06			100% SUBMITTAL

NORTH CORRIDOR METRORAIL EXTENSION - PRELIMINARY ENGINEERING (100% SUBMITTAL)

MIAMI-DADE COUNTY — MIAMI-DADE TRANSIT

PARSONS
7600 CORPORATE CENTER DRIVE, SUITE 500
MIAMI, FLORIDA 33126
PHONE: (786) 464-1000 FAX: (786) 845-7119
CERTIFICATE OF AUTHORIZATION NO. 1838

Approved ____ Date ____

EARTHTECH
Transportation Services
architecture · engineering · construction
3760 NW 87th. Avenue, Suite 300
Miami, Florida 33178-2428
CERTIFICATE OF AUTHORIZATION NO. 8116
REGISTRATION # AA26000987

Approved ____ Date 05-22-06

DATE PMC PEC

PASSENGER STATIONS

NW 215TH ST. STATION 1-EAST ELEVATION

Scale 1" = 20' | Drawing PST-78 | Sheet 97

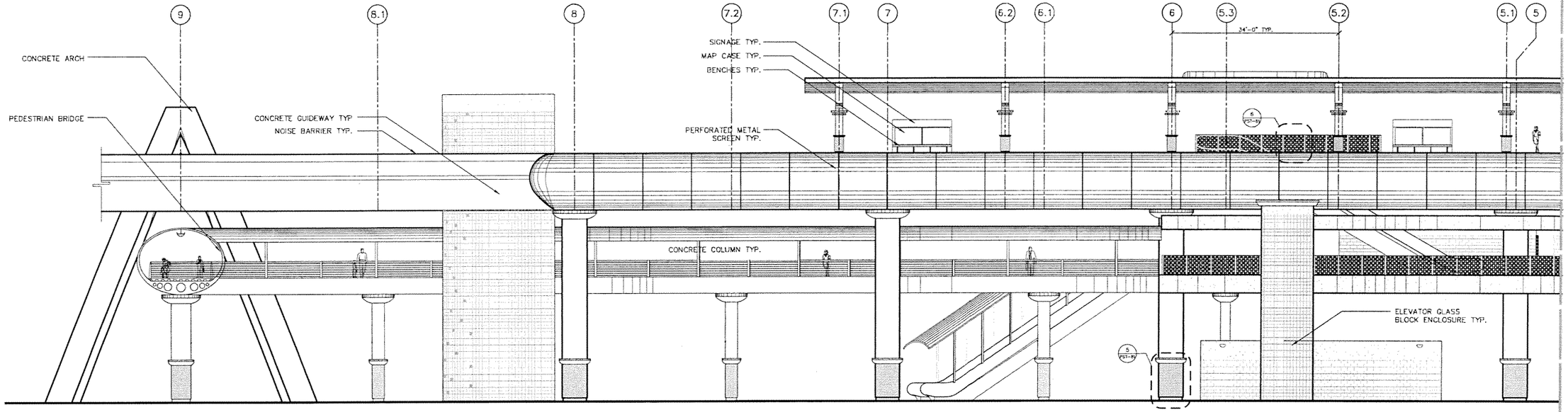

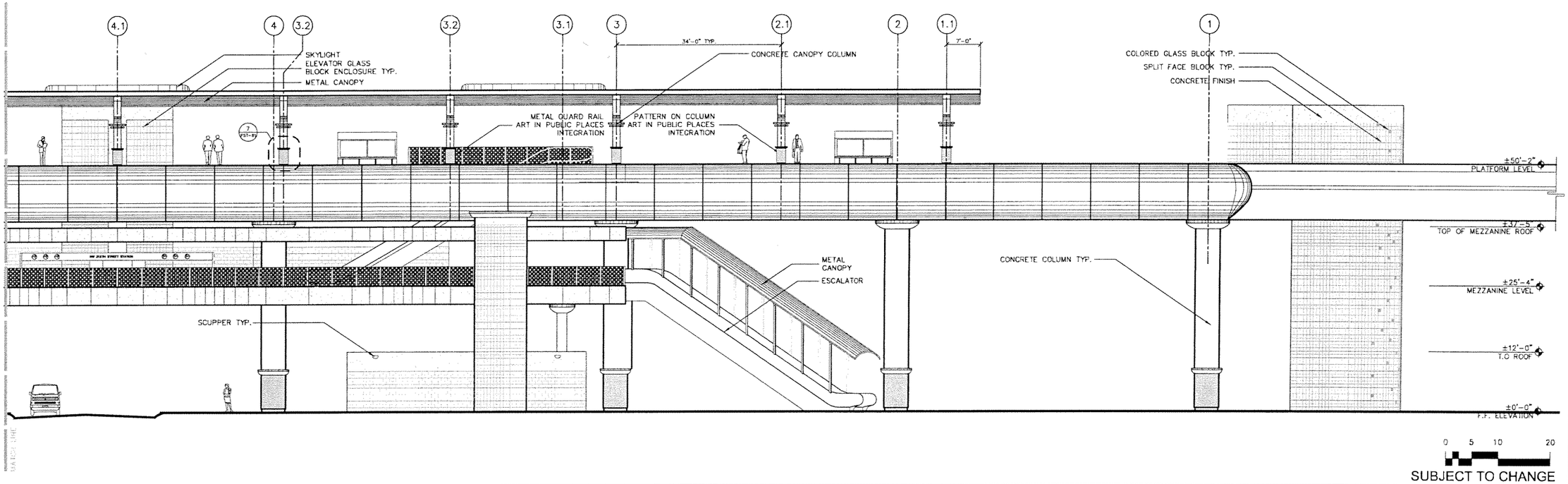

SUBJECT TO CHANGE

Designed by ML 5/06 Date	1	9/02/05			60% PROGRESS SET
Drawn by ER 5/06 Date	2	10/17/05			70% PROGRESS SET
Checked by ML 5/06 Date	3	3/10/06			90% REVISED PROGRESS SET
Approved by Date	4	5/22/06			100% SUBMITTAL
	No.	Date	By / Chk	App.	Revisions

NORTH CORRIDOR METRORAIL EXTENSION - PRELIMINARY ENGINEERING (100% SUBMITTAL)

MIAMI-DADE COUNTY

MIAMI-DADE TRANSIT

PARSONS
7600 CORPORATE CENTER DRIVE, SUITE 500
MIAMI, FLORIDA 33126
PHONE: (786) 464-1000 FAX: (786) 845-7119
CERTIFICATE OF AUTHORIZATION NO. 1838

Approved | Date

EARTHTECH
Transportation Services
architecture · engineering · construction
3750 NW 87th Avenue, Suite 300
Miami, Florida 33178-2428
CERTIFICATE OF AUTHORIZATION NO. 8116
REGISTRATION # AA26000867

Approved | Date 05-22-06

DATE TIME FILE

PASSENGER STATIONS

NW 215TH ST. STATION
2- WEST ELEVATION

Scale 1" = 20' | Drawing PST-79 | Sheet 88

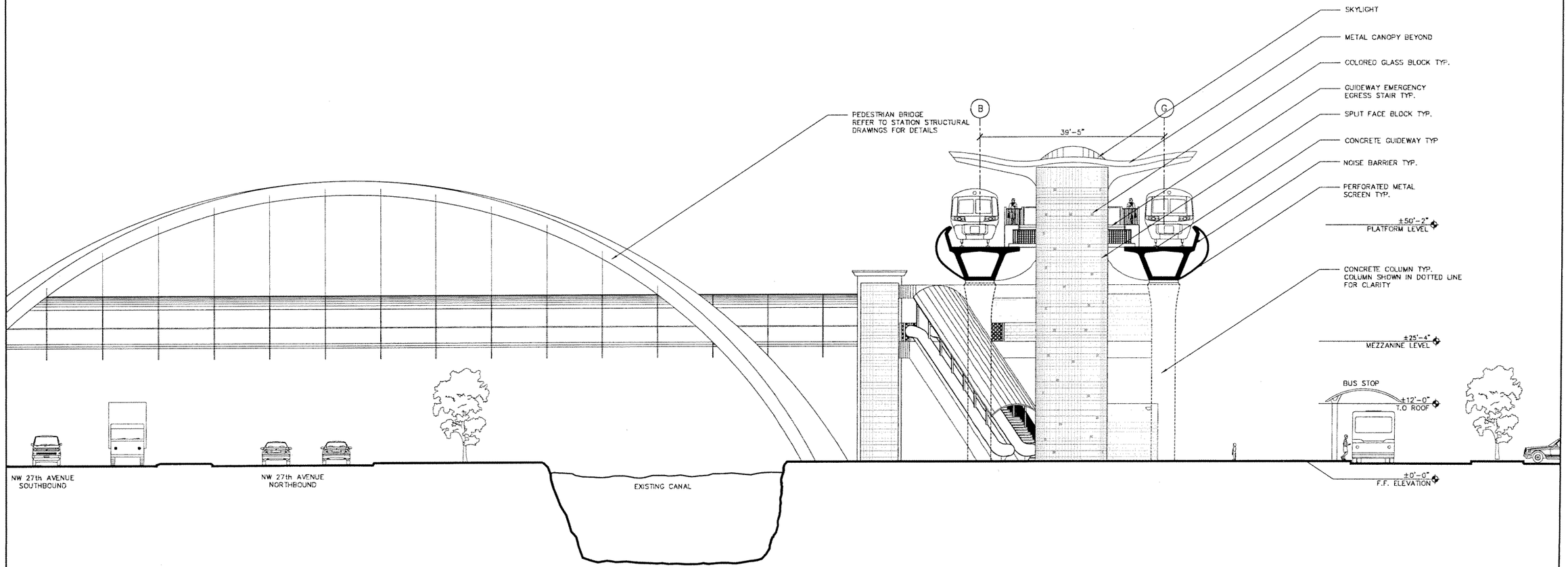

Designed by ML 5/06 Date	1	9/02/05			60% PROGRESS SET
Drawn by ER 5/06 Date	2	10/17/05			70% PROGRESS SET
Checked by ML 5/06 Date	3	3/10/06			90% REVISED PROGRESS SET
Approved by Date	4	5/22/06			100% SUBMITTAL
	No.	Date	By / Chk	App.	Revisions

NORTH CORRIDOR METRORAIL EXTENSION - PRELIMINARY ENGINEERING (100% SUBMITTAL)

MIAMI-DADE COUNTY

MIAMI-DADE TRANSIT

PARSONS
7600 CORPORATE CENTER DRIVE, SUITE 500
MIAMI, FLORIDA 33126
PHONE: (786) 464-1000 FAX: (786) 845-7119
CERTIFICATE OF AUTHORIZATION NO. 1838

Approved | Date

EARTHTECH
Transportation Services
architecture · engineering · construction
3750 NW 87th Avenue, Suite 300
Miami, Florida 33178-2430
CERTIFICATE OF AUTHORIZATION NO. 8116
REGISTRATION # AA26000067

Approved | Date 05-22-06

DATE TIME FILE

PASSENGER STATIONS

NW 215TH ST. STATION
3- SOUTH ELEVATION

Scale 1" = 20' | Drawing PST-80 | Sheet 89

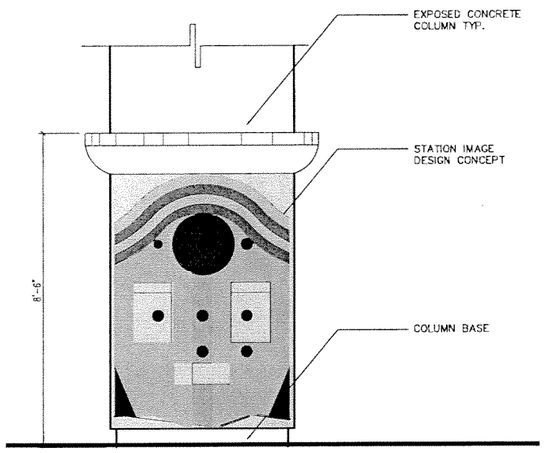

5-STATION DEFINING IMAGE
ON STATION/GUIDEWAY SUPPORT
COLUMNS

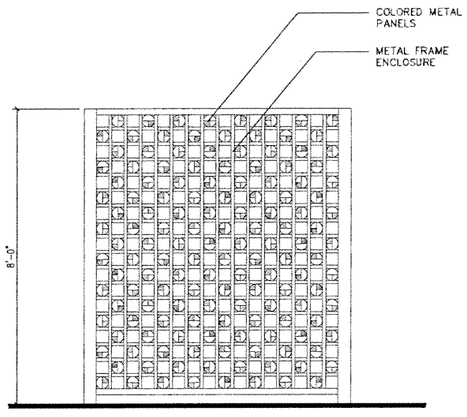

6-STATION DEFINING IMAGE ON
CONCOURSE & ESCALATOR
ENCLOSURE

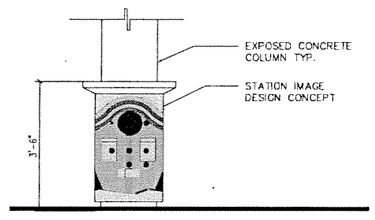

7-STATION DEFINING IMAGE
ON STATION COLUMNS

NOTE: FINAL DESIGN ON COLUMN AND ENCLOSURE
TO BE DETERMINED DURING FINAL DESIGN PHASE.

SUBJECT TO CHANGE

Designed by ML 5/06 Date	1	9/02/05			60% PROGRESS SET
Drawn by ER 5/06 Date	2	10/17/05			70% PROGRESS SET
Checked by ML 5/06 Date	3	3/10/06			90% REVISED PROGRESS SET
	4	5/22/06			100% SUBMITTAL
Approved by Date	No.	Date	By Chk	App.	Revisions

NORTH CORRIDOR METRORAIL EXTENSION - PRELIMINARY ENGINEERING (100% SUBMITTAL)

MIAMI-DADE COUNTY
MIAMI-DADE TRANSIT

PARSONS
7600 CORPORATE CENTER DRIVE, SUITE 500
MIAMI, FLORIDA 33126
PHONE: (786) 464-1000 FAX: (786) 845-7119
CERTIFICATE OF AUTHORIZATION NO. 1838
Approved | Date

EARTHTECH
Transportation Services
architecture · engineering · construction
3750 NW 87th Avenue, Suite 300
Miami, Florida 33178-2430
CERTIFICATE OF AUTHORIZATION NO. 8115
REGISTRATION # AA26000387
Approved | Date 05-22-06

PASSENGER STATIONS

NW 215TH ST. STATION ELEVATIONS

Scale NTS | Drawing PST-81 | Sheet 90

DATE | TIME | FILE

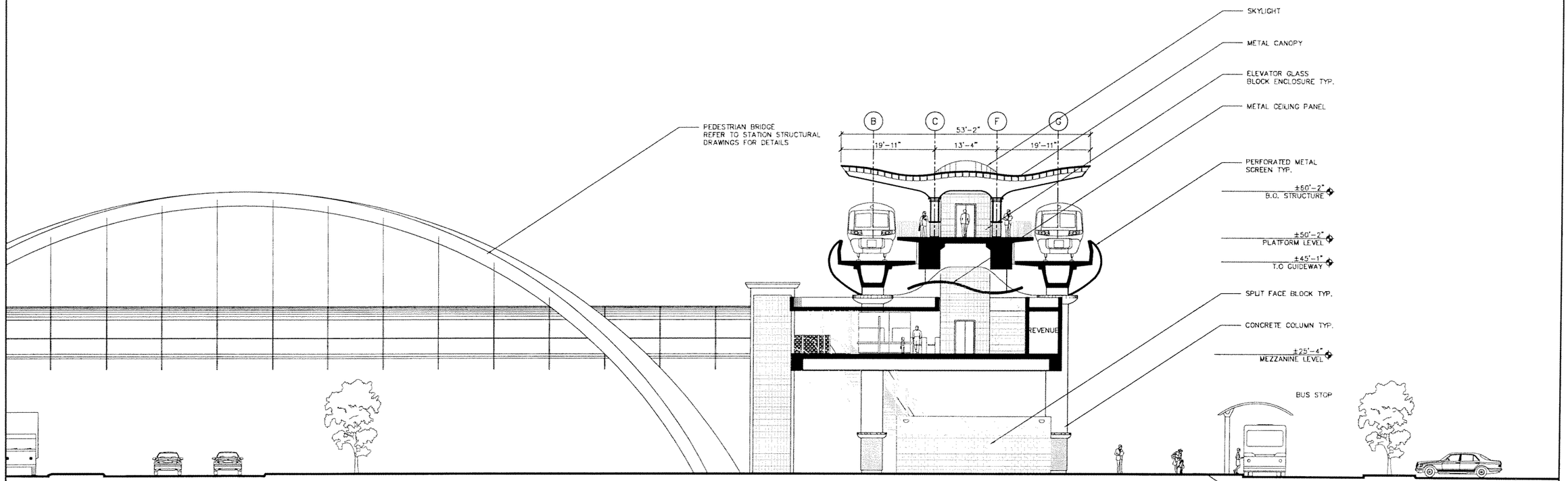

0 5 10 20

SUBJECT TO CHANGE

Designed by ML 5/06 Date	1	5/02/05			60% PROGRESS SET
Drawn by ER 5/06 Date	2	10/17/05			70% PROGRESS SET
Checked by ML 5/06 Date	3	3/10/06			90% REVISED PROGRESS SET
Approved by Date	4	5/22/06			100% SUBMITTAL
	No.	Date	By / Chk.	App.	Revisions

NORTH CORRIDOR METRORAIL EXTENSION - PRELIMINARY ENGINEERING (100% SUBMITTAL)

MIAMI-DADE COUNTY

MIAMI-DADE TRANSIT

PARSONS
7600 CORPORATE CENTER DRIVE, SUITE 500
MIAMI, FLORIDA 33126
PHONE: (786) 464-1000 FAX: (786) 845-7119
CERTIFICATE OF AUTHORIZATION NO. 1838

Approved | Date

EARTHTECH
Transportation Services
architecture · engineering · construction
3750 NW 87th. Avenue, Suite 300
Miami, Florida 33178-2430
CERTIFICATE OF AUTHORIZATION NO. 8115
REGISTRATION # AA26000697

Approved | Date 05-22-06

DATE TIME FILE

PASSENGER STATIONS

NW 215TH ST.STATION A-CROSS SECTION

Scale 1"=20' | Drawing PST-82 | Sheet 91

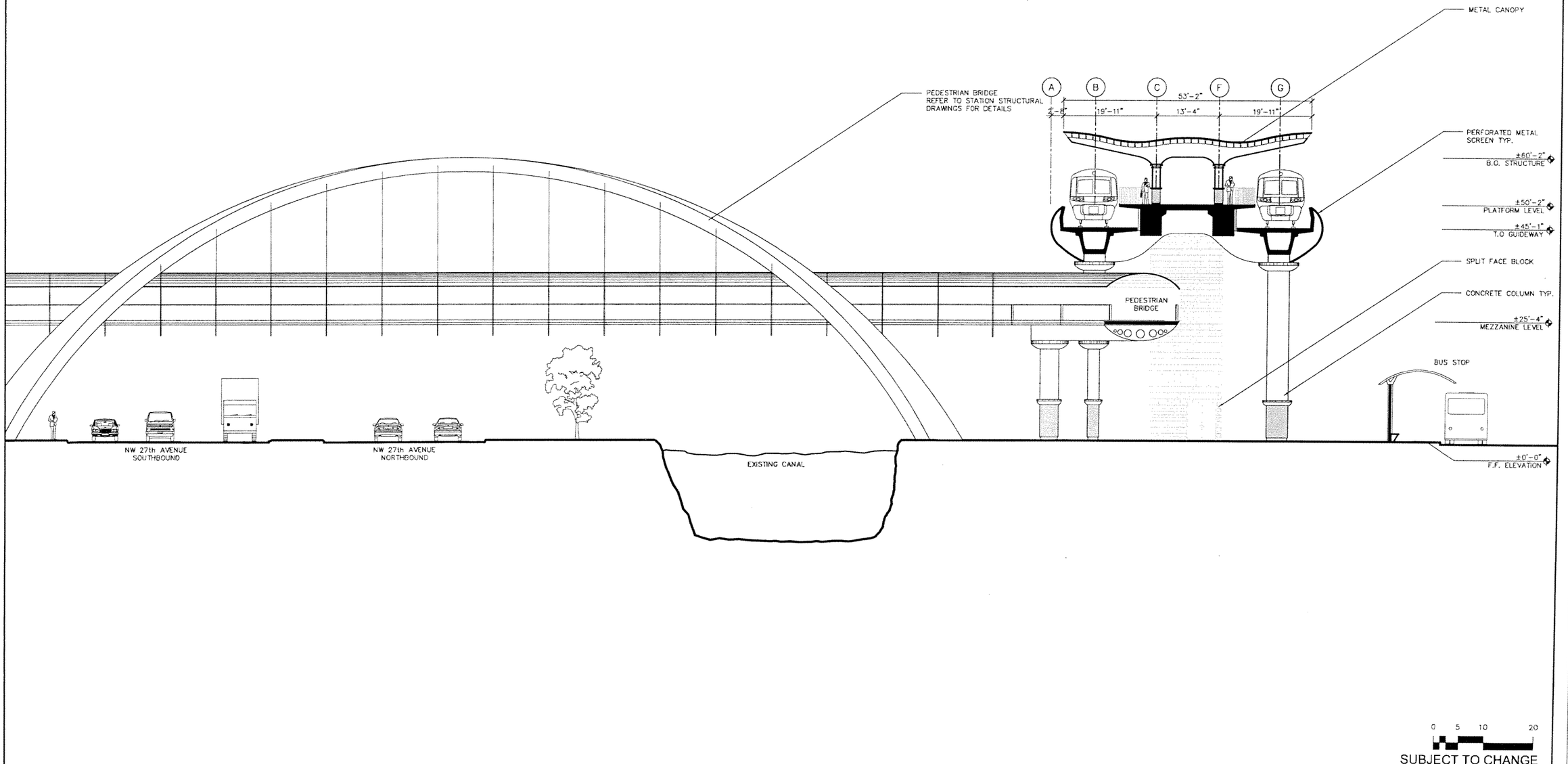

0 5 10 20

SUBJECT TO CHANGE

Designed by ML 5/06 Date	1	9/02/05				60% PROGRESS SET
	2	10/17/05				70% PROGRESS SET
Drawn by ER 5/06 Date	3	3/31/06				90% REVISED PROGRESS SET
	4	5/22/06				100% SUBMITTAL
Checked by ML 5/06 Date						
Approved by Date	No.	Date	By / Chk	App.	Revisions	

NORTH CORRIDOR METRORAIL EXTENSION - PRELIMINARY ENGINEERING (100% SUBMITTAL)

MIAMI-DADE COUNTY

MIAMI-DADE TRANSIT

PARSONS
7600 CORPORATE CENTER DRIVE, SUITE 500
MIAMI, FLORIDA 33126
PHONE: (786) 464-1000 FAX: (786) 845-7119
CERTIFICATE OF AUTHORIZATION NO. 1838

Approved | Date

EARTH TECH
Transportation Services
architecture · engineering · construction
3750 NW 87th Avenue, Suite 300
Miami, Florida 33178-2428
CERTIFICATE OF AUTHORIZATION NO. 8116
REGISTRATION # AA26000981

Approved | Date 05-22-06

DATE TIME FILE

PASSENGER STATIONS

NW 215TH ST.STATION B-CROSS SECTION

Scale 1" = 20' | Drawing PST-83 | Sheet 92

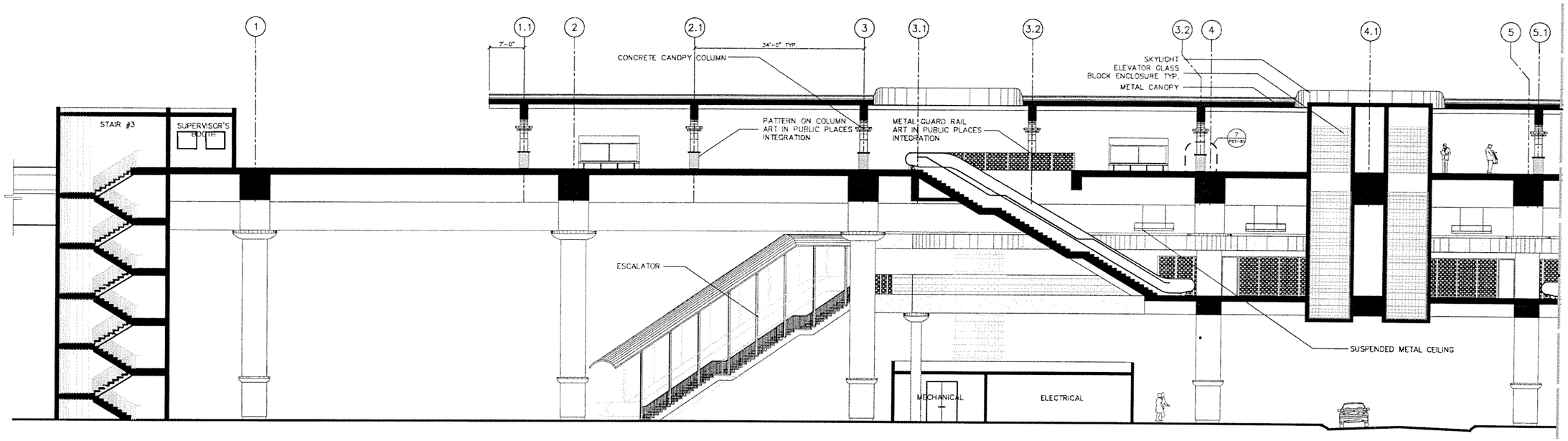

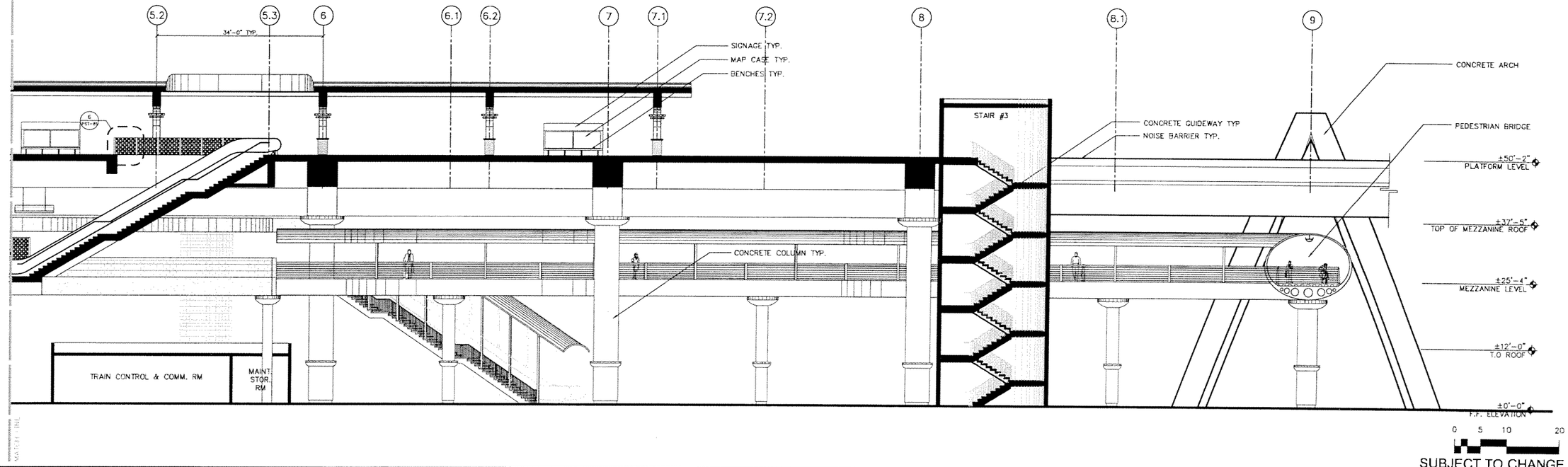

Designed by ML 5/06 Date	1	9/02/05			60% PROGRESS SET
Drawn by ER 5/06 Date	2	10/17/05			70% PROGRESS SET
Checked by ML 5/06 Date	3	3/10/06			90% REVISED PROGRESS SET
Approved by Date	4	5/22/06			100% SUBMITTAL
	No.	Date	By / Chk	App.	Revisions

NORTH CORRIDOR METRORAIL EXTENSION - PRELIMINARY ENGINEERING (100% SUBMITTAL)

MIAMI-DADE COUNTY

MIAMI-DADE TRANSIT

PARSONS
7600 CORPORATE CENTER DRIVE, SUITE 500
MIAMI, FLORIDA 33126
PHONE: (786) 464-1000 FAX: (786) 845-7119
CERTIFICATE OF AUTHORIZATION NO. 1838

Approved Date

EARTHTECH
Transportation Services
architecture · engineering · construction
3750 NW 87th Avenue, Suite 300
Miami, Florida 33178-2428
CERTIFICATE OF AUTHORIZATION NO. 8115
REGISTRATION # AA26000887

Approved Date 05-22-06

PASSENGER STATIONS

NW 215TH ST. STATION B-LONGITUDINAL SECTION

Scale 1" = 20' Drawing PST-84 Sheet 93

DATE PLOT FILE

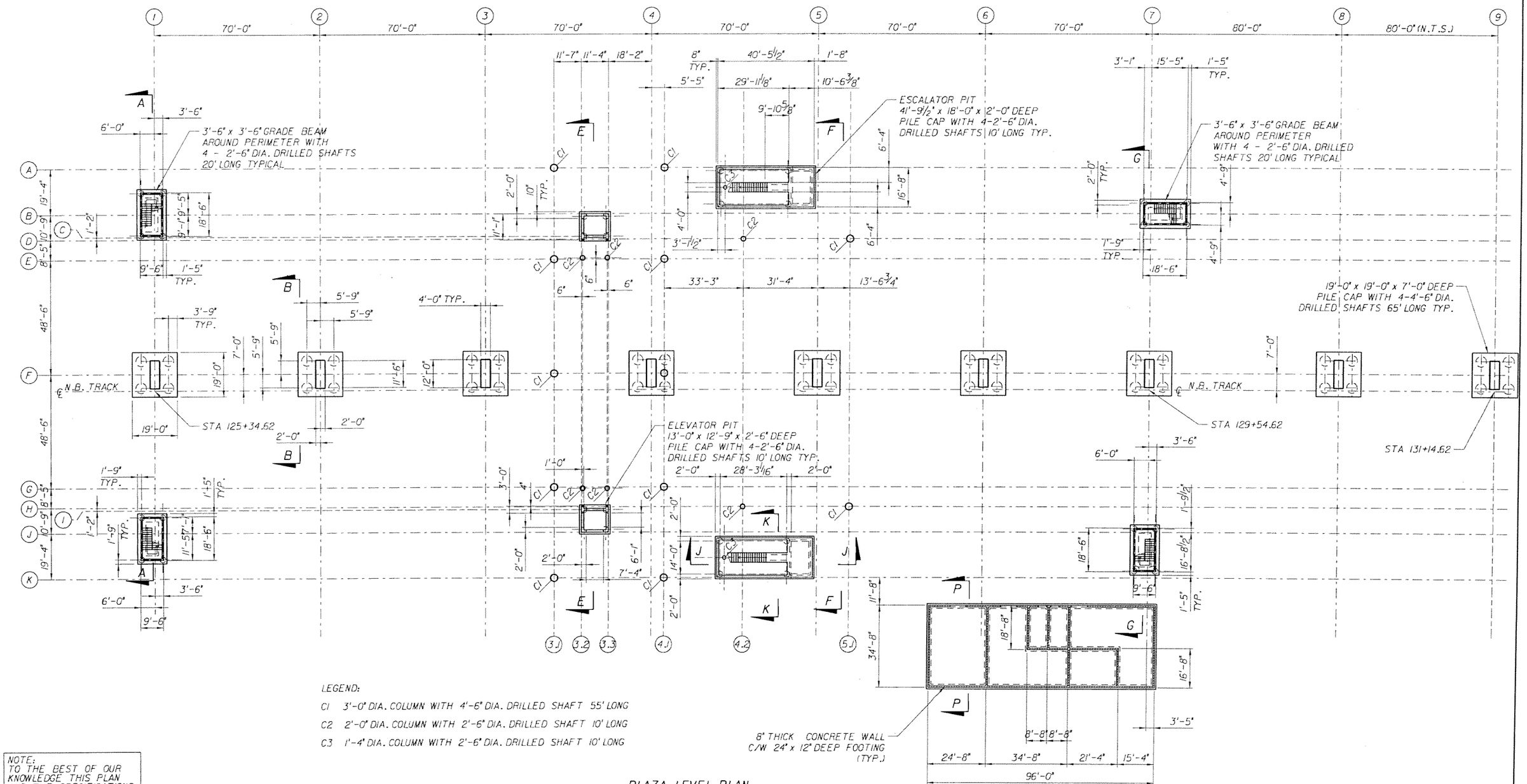

LEGEND:

C1 3'-0" DIA. COLUMN WITH 4'-6" DIA. DRILLED SHAFT 55' LONG

C2 2'-0" DIA. COLUMN WITH 2'-6" DIA. DRILLED SHAFT 10' LONG

C3 1'-4" DIA. COLUMN WITH 2'-6" DIA. DRILLED SHAFT 10' LONG

PLAZA LEVEL PLAN

NOTE:
TO THE BEST OF OUR KNOWLEDGE THIS PLAN AND THE SPECIFICATIONS APPLYING TO IT COMPLY WITH APPLICABLE MINIMUM BUILDING CODE

SUBJECT TO CHANGE

DK Designed by	MAY 2006 Date						
PSG Drawn by	MAY 2006 Date						
HKL Checked by	MAY 2006 Date						
Approved by	Date	No.	Date	By / Chk	App.	Revisions	

NORTH CORRIDOR METRORAIL EXTENSION - PRELIMINARY ENGINEERING (100% SUBMITTAL)

STRUCTURES - STATION

MIAMI-DADE TRANSIT

PARSONS
7600 CORPORATE CENTER DRIVE, SUITE 500
MIAMI, FLORIDA 33126
PHONE: (786) 464-1000 FAX: (786) 845-7119
CERTIFICATE OF AUTHORIZATION NO. 1838
Approved | Date

EarthTech
A Tyco International Ltd Company
Reynaldo R. Rivas, P.E.
Florida License No. 41174
3750 NW 87th Avenue, Suite 300
Miami, FL 33178
Certificate of Authorization No. 8115
Approved | Date

NW 82nd STREET
PLAZA LAYOUT PLAN

Scale 1" = 20' | Drawing SSP -S1-01 | Sheet 9 of

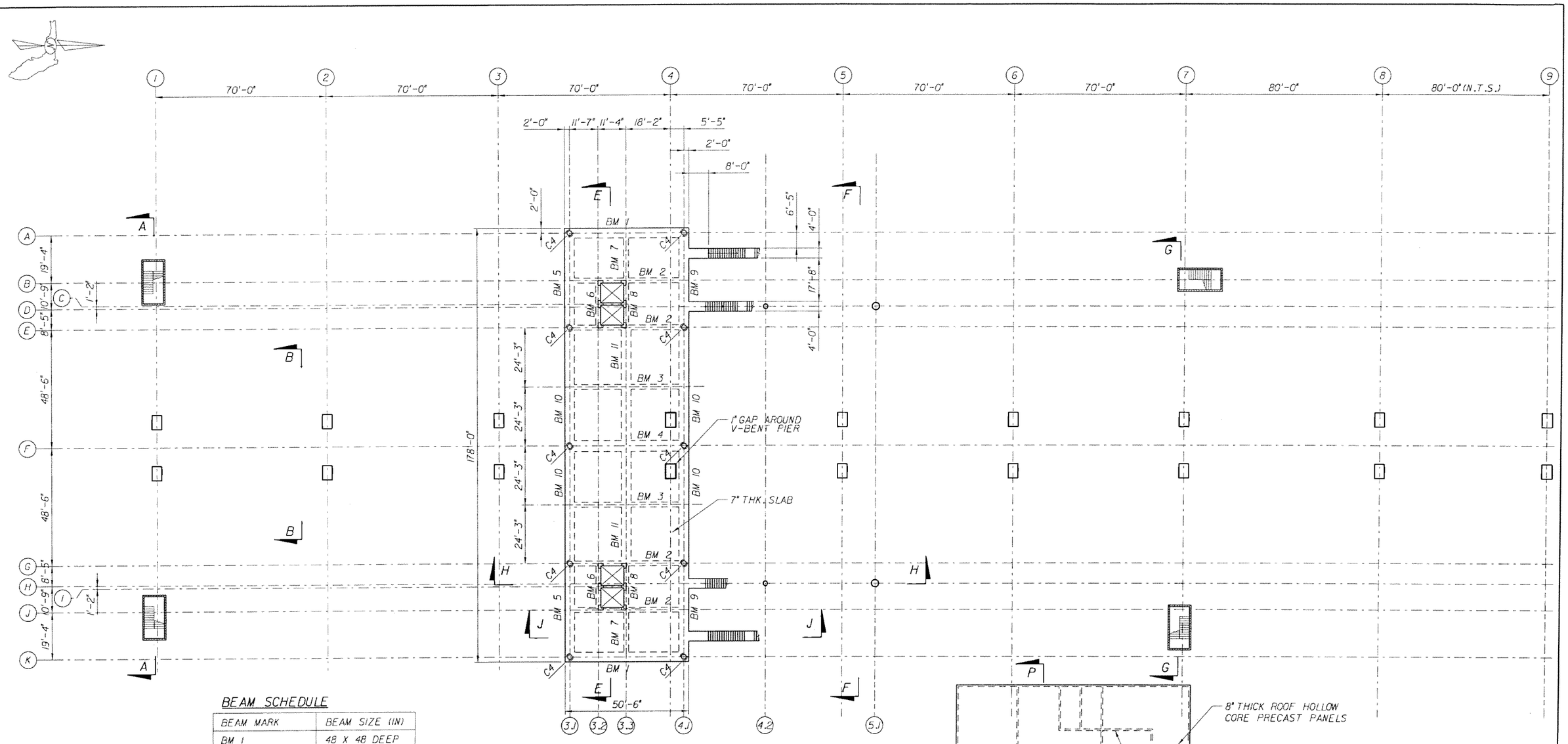

BEAM SCHEDULE

BEAM MARK	BEAM SIZE (IN)
BM 1	48 X 48 DEEP
BM 2	24 x 48 DEEP
BM 3	24 x 42 DEEP
BM 4	54 x 48 DEEP
BM 5	48 x 48 DEEP
BM 6	24 x 48 DEEP
BM 7	24 x 42 DEEP
BM 8	24 x 48 DEEP
BM 9	48 x 48 DEEP
BM 10	48 x 48 DEEP
BM 11	48 x 42 DEEP

LEGEND:

C4 2'-0" DIA. COLUMN

NOTE:
TO THE BEST OF OUR KNOWLEDGE THIS PLAN AND THE SPECIFICATIONS APPLYING TO IT COMPLY WITH APPLICABLE MINIMUM BUILDING CODE

MEZZANINE LEVEL PLAN

SUBJECT TO CHANGE

DK	MAY 2006						
Designed by	Date						
PSG	MAY 2006						
Drawn by	Date						
HKL	MAY 2006						
Checked by	Date						
Approved by	Date	No.	Date	By / Chk	App.	Revisions	

NORTH CORRIDOR METRORAIL EXTENSION - PRELIMINARY ENGINEERING (100% SUBMITTAL)

STRUCTURES - STATION

MIAMI-DADE TRANSIT

PARSONS
7600 CORPORATE CENTER DRIVE, SUITE 500
MIAMI, FLORIDA 33126
PHONE: (786) 464-1000 FAX: (786) 845-7119
CERTIFICATE OF AUTHORIZATION NO. 1838

Approved | Date

EarthTech
A Tyco International Ltd Company
Reynaldo R. Rivas, P.E.
Florida License No. 41174
3750 NW 87th Avenue, Suite 300
Miami, FL 33178
Certificate of Authorization No. 8115

Approved | Date

NW 82nd STREET MEZZANINE LAYOUT PLAN

Scale 1" = 20' | Drawing SSP-S1-02 | Sheet 95

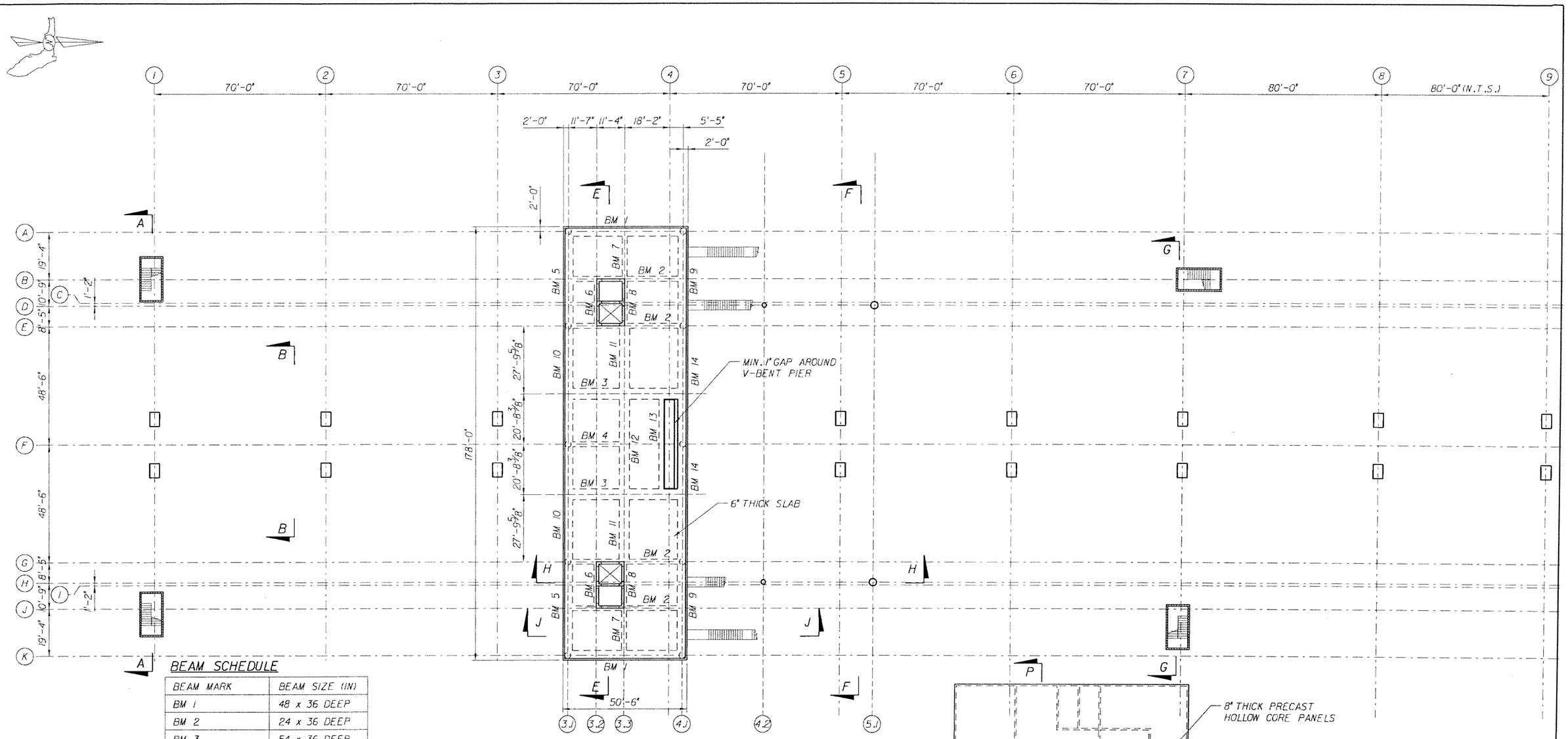

MEZZANINE ROOF PLAN

BEAM SCHEDULE

BEAM MARK	BEAM SIZE (IN)
BM 1	48 x 36 DEEP
BM 2	24 x 36 DEEP
BM 3	54 x 36 DEEP
BM 4	24 x 36 DEEP
BM 5	48 x 36 DEEP
BM 6	24 x 36 DEEP
BM 7	24 x 36 DEEP
BM 8	24 x 36 DEEP
BM 9	48 x 36 DEEP
BM 10	48 x 36 DEEP
BM 11	48 x 36 DEEP
BM 12	48 x 36 DEEP
BM 13	24 x 36 DEEP
BM 14	48 x 36 DEEP

NOTE:
TO THE BEST OF OUR KNOWLEDGE THIS PLAN AND THE SPECIFICATIONS APPLYING TO IT COMPLY WITH APPLICABLE MINIMUM BUILDING CODE

SUBJECT TO CHANGE

DK Designed by MAY 2006 Date
PSG Drawn by MAY 2006 Date
HKL Checked by MAY 2006 Date
Approved by Date

No.	Date	By / Chk	App.	Revisions

NORTH CORRIDOR METRORAIL EXTENSION - PRELIMINARY ENGINEERING (100% SUBMITTAL)

MIAMI-DADE TRANSIT

PARSONS
7600 CORPORATE CENTER DRIVE, SUITE 500
MIAMI, FLORIDA 33126
PHONE: (786) 464-1000 FAX: (786) 845-7119
CERTIFICATE OF AUTHORIZATION NO. 1838
Approved Date

EarthTech
A Tyco International Ltd Company
Reynaldo R. Rivas, P.E.
Florida License No. 41174
3750 NW 87th Avenue, Suite 300
Miami, FL 33178
Certificate of Authorization No. 8115
Approved Date

STRUCTURES - STATION

NW 82nd STREET MEZZANINE ROOF PLAN

Scale 1" = 20' | Drawing SSP-S1-03 | Sheet 96

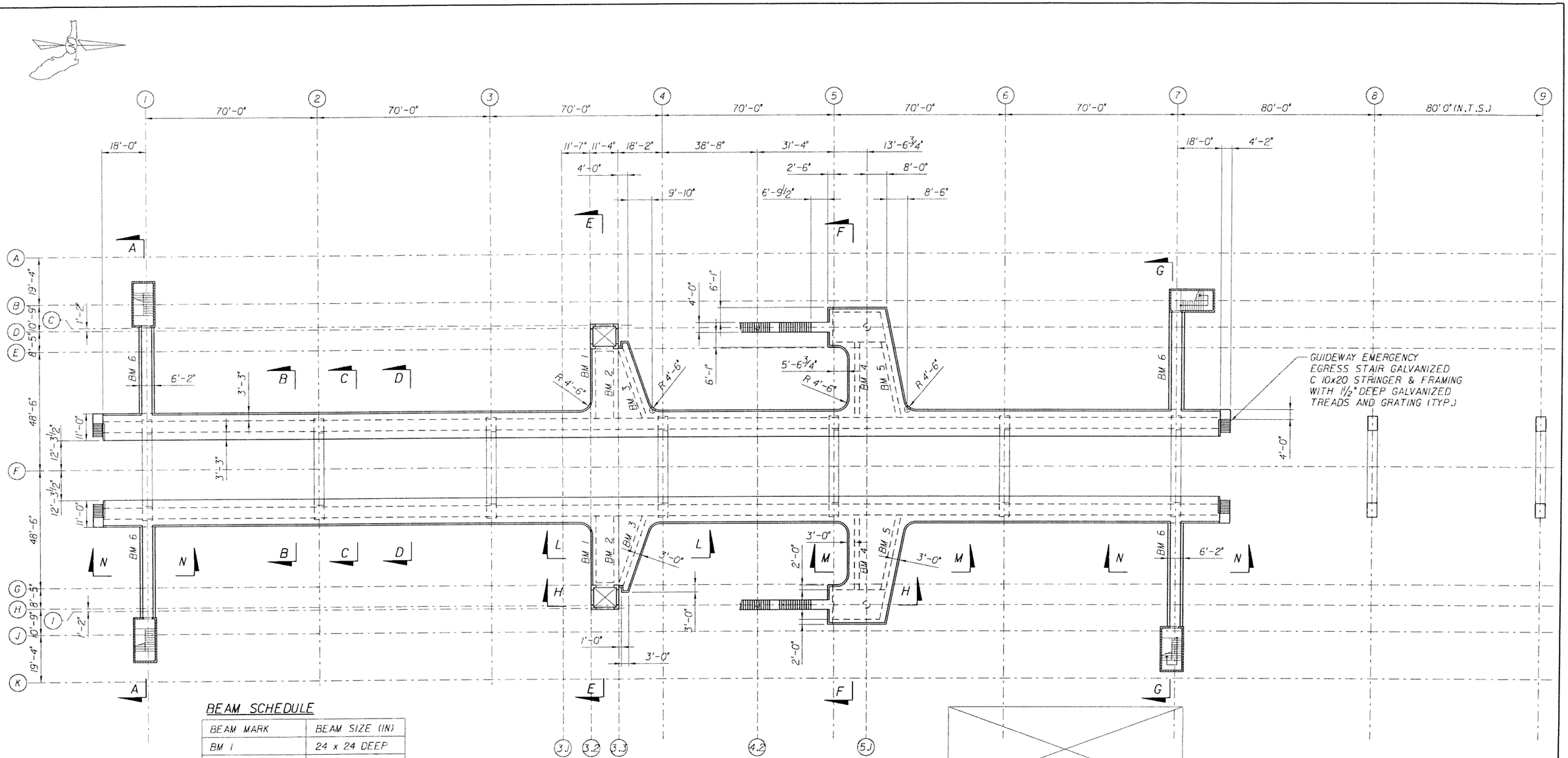

PLATFORM LEVEL PLAN

BEAM SCHEDULE

BEAM MARK	BEAM SIZE (IN)
BM 1	24 x 24 DEEP
BM 2	24 x 24 DEEP
BM 3	24 x 24 DEEP
BM 4	24 x 24 DEEP
BM 5	24 x 24 DEEP
BM 6	SEE SECTION

NOTE:
TO THE BEST OF OUR KNOWLEDGE THIS PLAN AND THE SPECIFICATIONS APPLYING TO IT COMPLY WITH APPLICABLE MINIMUM BUILDING CODE

SUBJECT TO CHANGE

DK Designed by	MAY 2006 Date					
PSG Drawn by	MAY 2006 Date					
HKL Checked by	MAY 2006 Date					
Approved by	Date	No.	Date	By / Chk	App.	Revisions

NORTH CORRIDOR METRORAIL EXTENSION - PRELIMINARY ENGINEERING (100% SUBMITTAL)

MIAMI-DADE TRANSIT

PARSONS
7600 CORPORATE CENTER DRIVE, SUITE 500
MIAMI, FLORIDA 33126
PHONE: (786) 464-1000 FAX: (786) 845-7119
CERTIFICATE OF AUTHORIZATION NO. 1838

EarthTech
A Tyco International Ltd Company
Reynaldo R. Rivas, P.E.
Florida License No. 41174
3750 NW 87th Avenue, Suite 300
Miami, FL 33178
Certificate of Authorization No. 8115

Approved	Date	Approved	Date

STRUCTURES - STATION

NW 82nd STREET PLATFORM LAYOUT PLAN

Scale	Drawing	Sheet
1" = 20'	SSP-S1-04	97

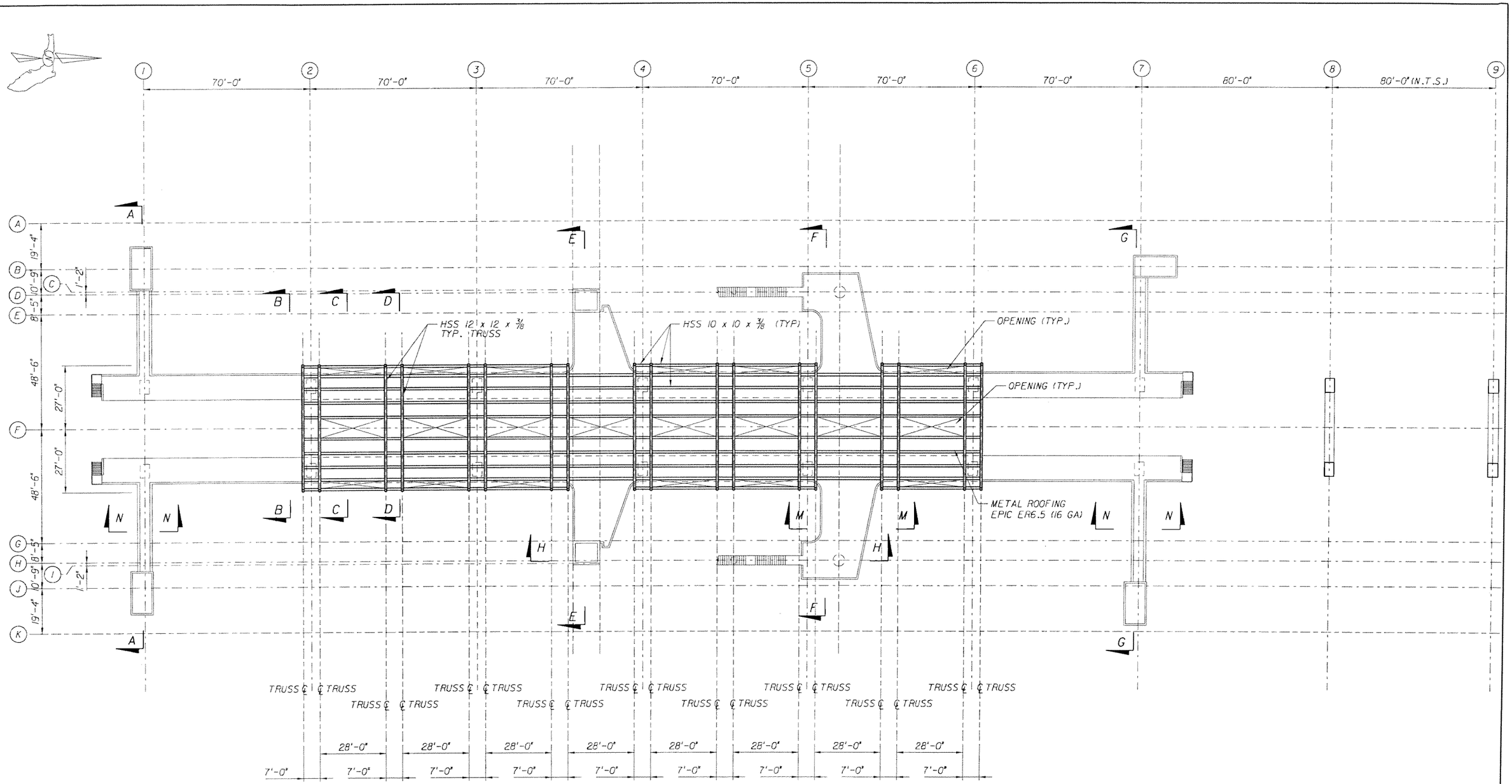

CANOPY ROOF PLAN

NOTE:
TO THE BEST OF OUR KNOWLEDGE THIS PLAN AND THE SPECIFICATIONS APPLYING TO IT COMPLY WITH APPLICABLE MINIMUM BUILDING CODE

SUBJECT TO CHANGE

DK Designed by	MAY 2006 Date						
PSG Drawn by	MAY 2006 Date						
HKL Checked by	MAY 2006 Date						
Approved by	Date	No.	Date	By / Chk.	App.	Revisions	

NORTH CORRIDOR METRORAIL EXTENSION - PRELIMINARY ENGINEERING (100% SUBMITTAL)

STRUCTURES - STATION

MIAMI-DADE TRANSIT

PARSONS
7600 CORPORATE CENTER DRIVE, SUITE 500
MIAMI, FLORIDA 33126
PHONE: (786) 464-1000 FAX: (786) 845-7119
CERTIFICATE OF AUTHORIZATION NO. 1838

Approved | Date

EarthTech
A Tyco International Ltd Company
Reynaldo R. Rivas, P.E.
Florida License No. 41174
3750 NW 87th Avenue, Suite 300
Miami, FL 33178
Certificate of Authorization No. 8115

Approved | Date

NW 82nd STREET ROOF LAYOUT PLAN

Scale 1" = 20' | Drawing SSP-S1-05 | Sheet 98

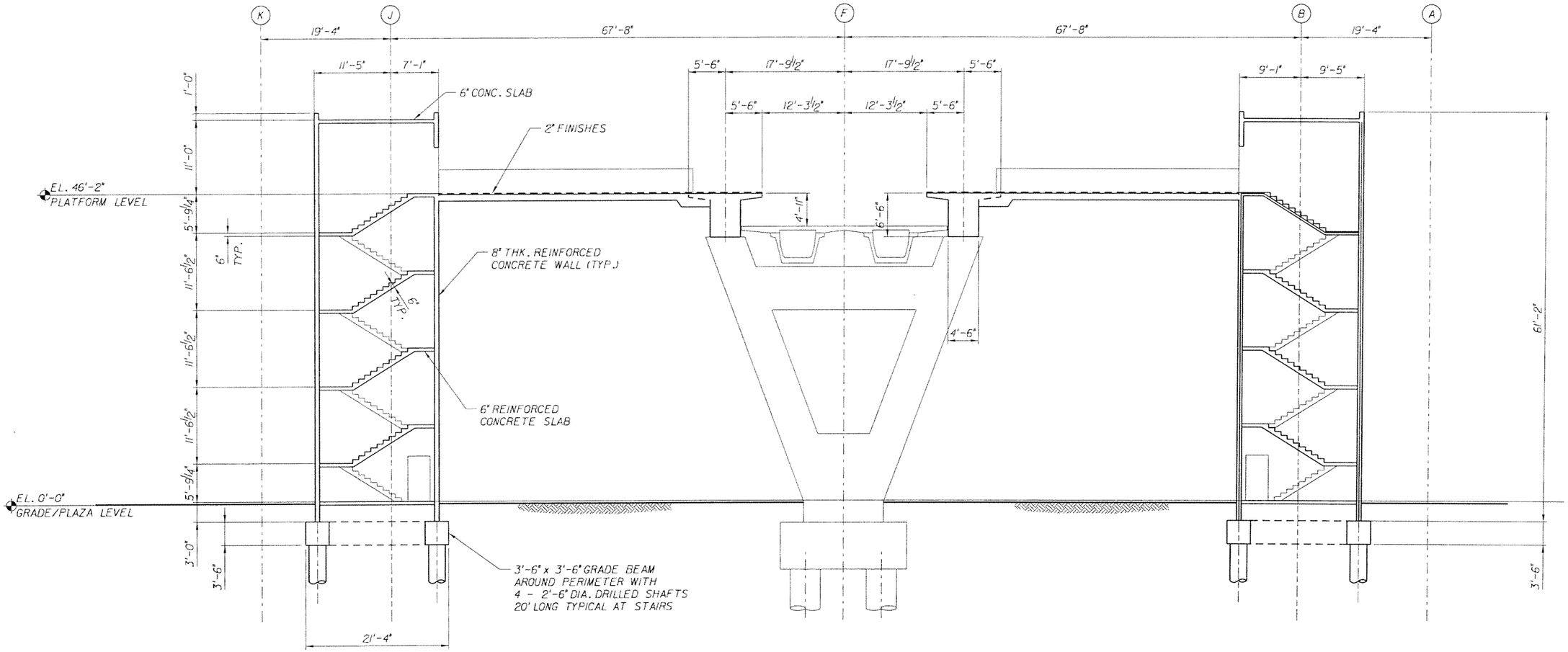

SECTION A-A

NOTE:
TO THE BEST OF OUR KNOWLEDGE THIS PLAN AND THE SPECIFICATIONS APPLYING TO IT COMPLY WITH APPLICABLE MINIMUM BUILDING CODE

SUBJECT TO CHANGE

DK Designed by	MAY 2006 Date					
PSG Drawn by	MAY 2006 Date					
HKL Checked by	MAY 2006 Date					
Approved by	Date	No.	Date	By / Chk	App.	Revisions

NORTH CORRIDOR METRORAIL EXTENSION - PRELIMINARY ENGINEERING (100% SUBMITTAL)

MIAMI-DADE TRANSIT

PARSONS
7600 CORPORATE CENTER DRIVE, SUITE 500
MIAMI, FLORIDA 33126
PHONE: (786) 464-1000 FAX: (786) 845-7119
CERTIFICATE OF AUTHORIZATION NO. 1838
Approved | Date

EarthTech
A Tyco International Ltd Company
Reynaldo R. Rivas, P.E.
Florida License No. 41174
3750 NW 87th Avenue, Suite 300
Miami, FL 33178
Certificate of Authorization No. 8115
Approved | Date

STRUCTURES - STATION

NW 82nd STATION
SECTION SHEET 1 OF 7

Scale 1/8" = 1'-0" | Drawing SSP-S1-06 | Sheet 99

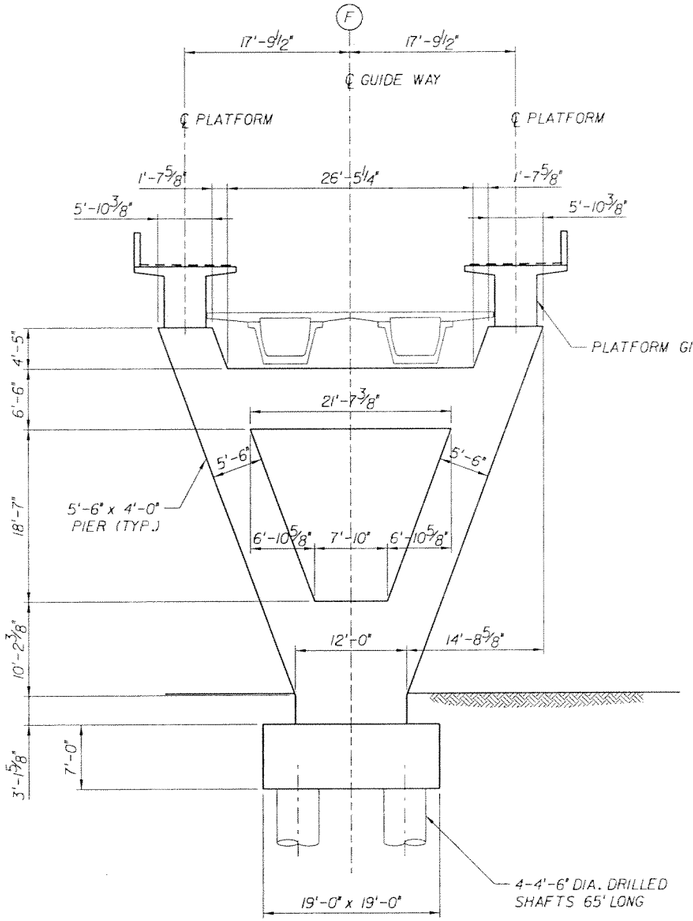

SECTION B-B
SCALE: 1/8" = 1'-0"

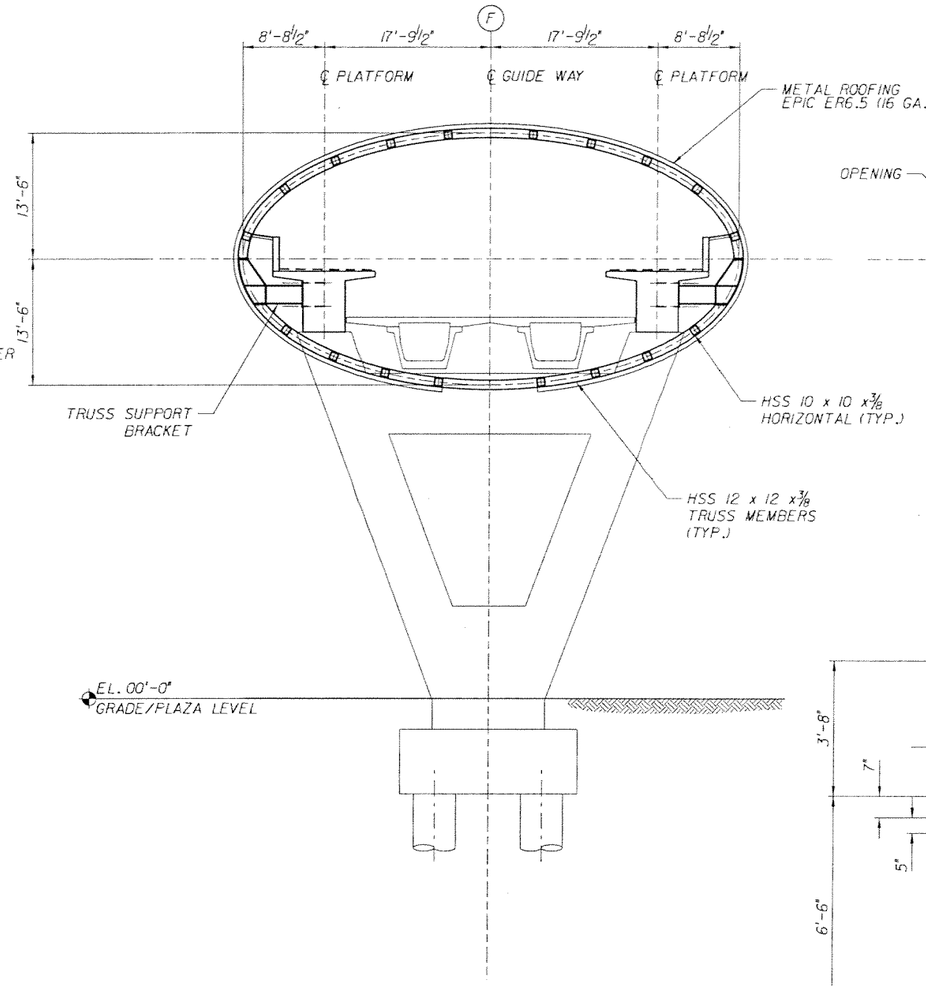

SECTION C-C
SCALE: 1/8" = 1'-0"

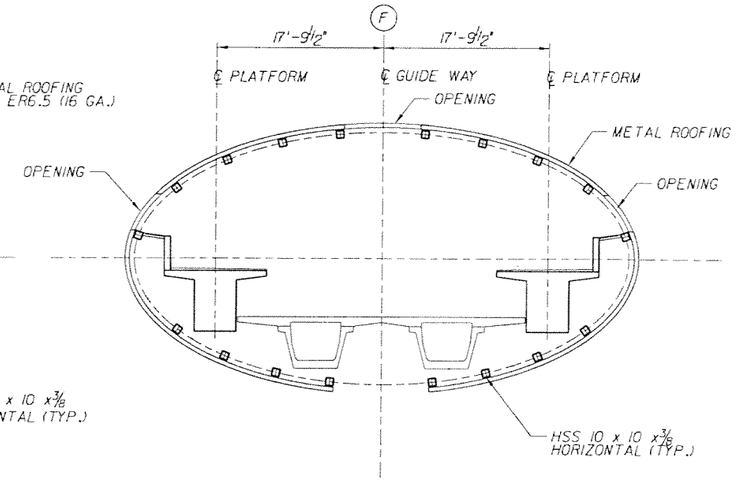

SECTION D-D
SCALE: 1/8" = 1'-0"

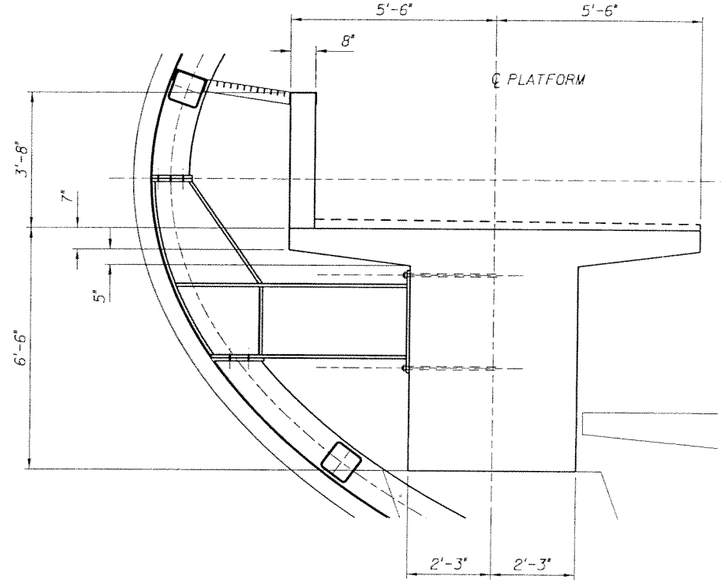

TRUSS SUPPORT BRACKET DETAIL
SCALE: 1/4" = 1'-0"

NOTE:
TO THE BEST OF OUR KNOWLEDGE THIS PLAN AND THE SPECIFICATIONS APPLYING TO IT COMPLY WITH APPLICABLE MINIMUM BUILDING CODE

SUBJECT TO CHANGE

CS/DY Designed by	MAY 2006 Date						
PSG Drawn by	MAY 2006 Date						
CS Checked by	MAY 2006 Date						
Approved by	Date	No.	Date	By / Chk	App.	Revisions	

NORTH CORRIDOR METRORAIL EXTENSION - PRELIMINARY ENGINEERING (100% SUBMITTAL)

MIAMI-DADE TRANSIT

PARSONS
7600 CORPORATE CENTER DRIVE, SUITE 500
MIAMI, FLORIDA 33126
PHONE: (786) 464-1000 FAX: (786) 845-7119
CERTIFICATE OF AUTHORIZATION NO. 1838

Approved | Date

EarthTech
A Tyco International Ltd Company
Reynaldo R. Rivas, P.E.
Florida License No. 41174
3750 NW 87th Avenue, Suite 300
Miami, FL 33178
Certificate of Authorization No. 8115

Approved | Date

STRUCTURES - STATION

NW 82nd STREET
SECTION SHEET 2 OF 7

Scale: AS NOTED | Drawing: SSP-S1-07 | Sheet: 100

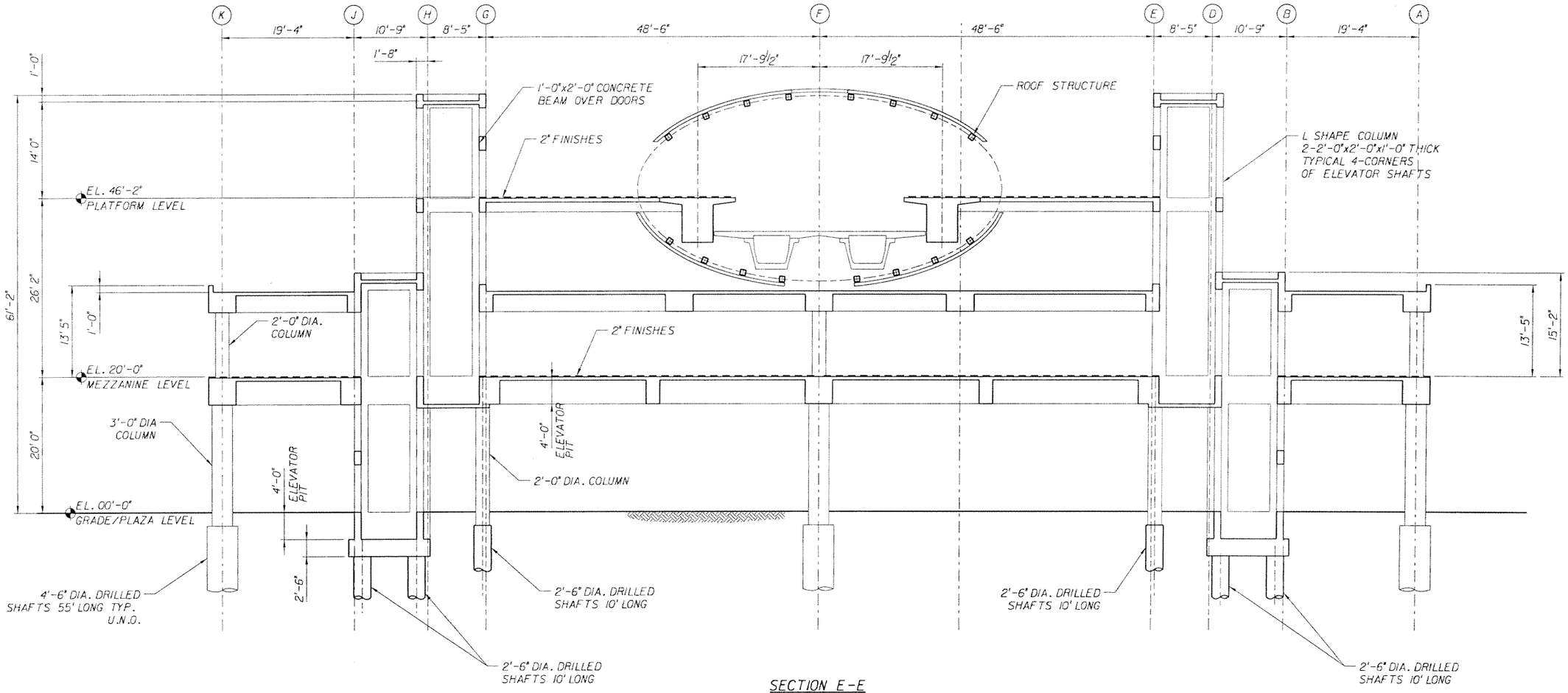

SECTION E-E

NOTE:
TO THE BEST OF OUR KNOWLEDGE THIS PLAN AND THE SPECIFICATIONS APPLYING TO IT COMPLY WITH APPLICABLE MINIMUM BUILDING CODE

SUBJECT TO CHANGE

CS/DY Designed by	MAY 2006 Date					
PSG Drawn by	MAY 2006 Date					
CS Checked by	MAY 2006 Date					
Approved by	Date	No.	Date	By / Chk	App.	Revisions

NORTH CORRIDOR METRORAIL EXTENSION - PRELIMINARY ENGINEERING (100% SUBMITTAL)

MIAMI-DADE TRANSIT

PARSONS
7600 CORPORATE CENTER DRIVE, SUITE 500
MIAMI, FLORIDA 33126
PHONE: (786) 464-1000 FAX: (786) 845-7119
CERTIFICATE OF AUTHORIZATION NO. 1838

EarthTech
A Tyco International Ltd Company
Reynaldo R. Rivas, P.E.
Florida License No. 41174
3750 NW 87th Avenue, Suite 300
Miami, FL 33178
Certificate of Authorization No. 8115

Approved | Date | Approved | Date

STRUCTURES - STATION

NW 82nd STREET
SECTION SHEET 3 OF 7

Scale 1/8" = 1'-0" | Drawing SSP -S1-08 | Sheet 101

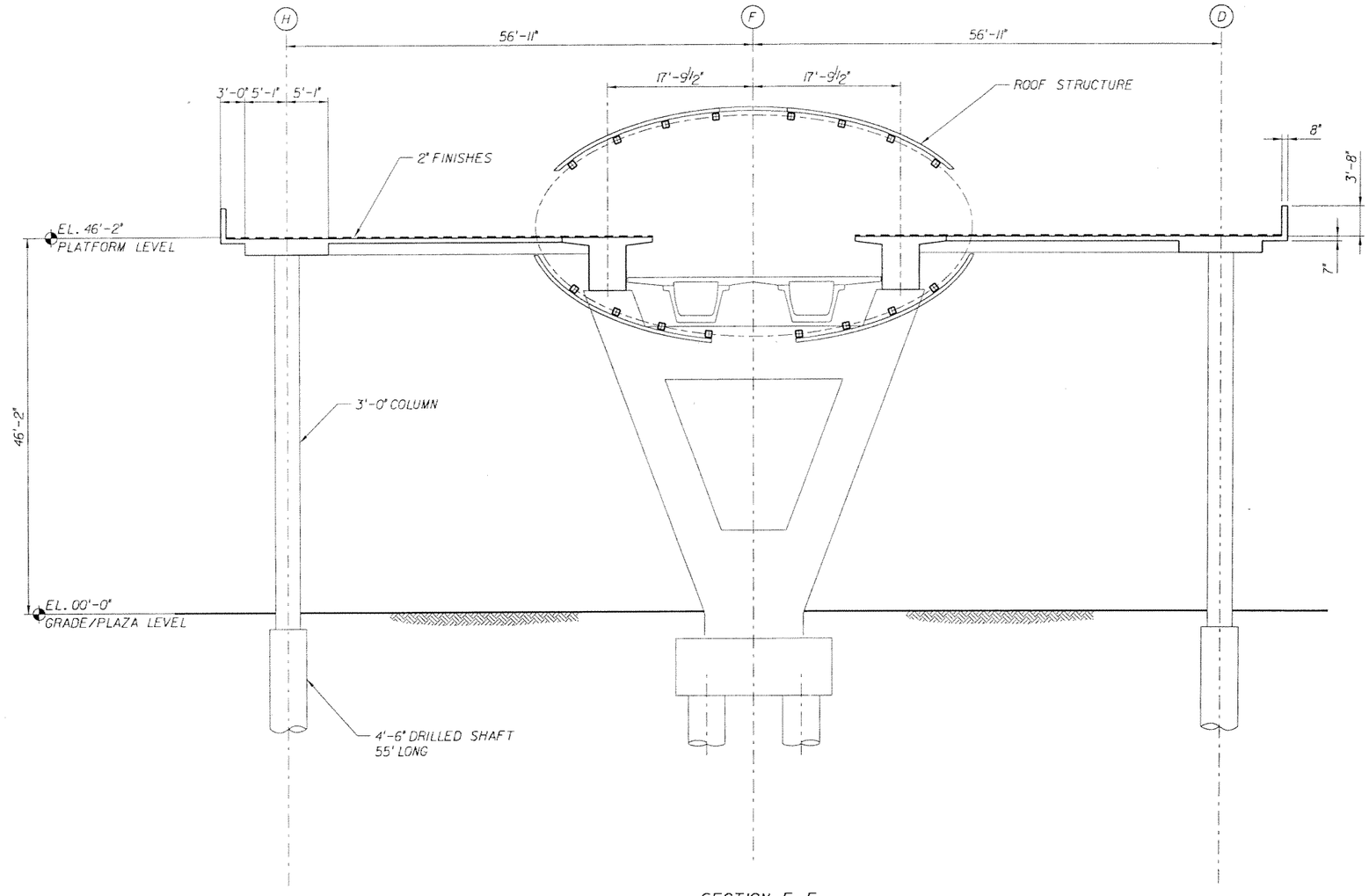

SECTION F-F

NOTE:
TO THE BEST OF OUR KNOWLEDGE THIS PLAN AND THE SPECIFICATIONS APPLYING TO IT COMPLY WITH APPLICABLE MINIMUM BUILDING CODE

SUBJECT TO CHANGE

CS/DY Designed by	MAY 2006 Date					
PSG Drawn by	MAY 2006 Date					
CS Checked by	MAY 2006 Date					
Approved by	Date	No.	Date	By / Chk.	App.	Revisions

NORTH CORRIDOR METRORAIL EXTENSION - PRELIMINARY ENGINEERING (100% SUBMITTAL)

STRUCTURES - STATION

MIAMI-DADE TRANSIT

PARSONS
7600 CORPORATE CENTER DRIVE, SUITE 500
MIAMI, FLORIDA 33126
PHONE: (786) 464-1000 FAX: (786) 845-7119
CERTIFICATE OF AUTHORIZATION NO. 1838

Approved | Date

EarthTech
A Tyco International Ltd Company
Reynaldo R. Rivas, P.E.
Florida License No. 41174
3750 NW 87th Avenue, Suite 300
Miami, FL 33178
Certificate of Authorization No. 8115

Approved | Date

NW 82nd STREET
SECTION SHEET 4 OF 7

Scale	Drawing	Sheet
1/8" = 1'-0"	SSP-S1-09	102

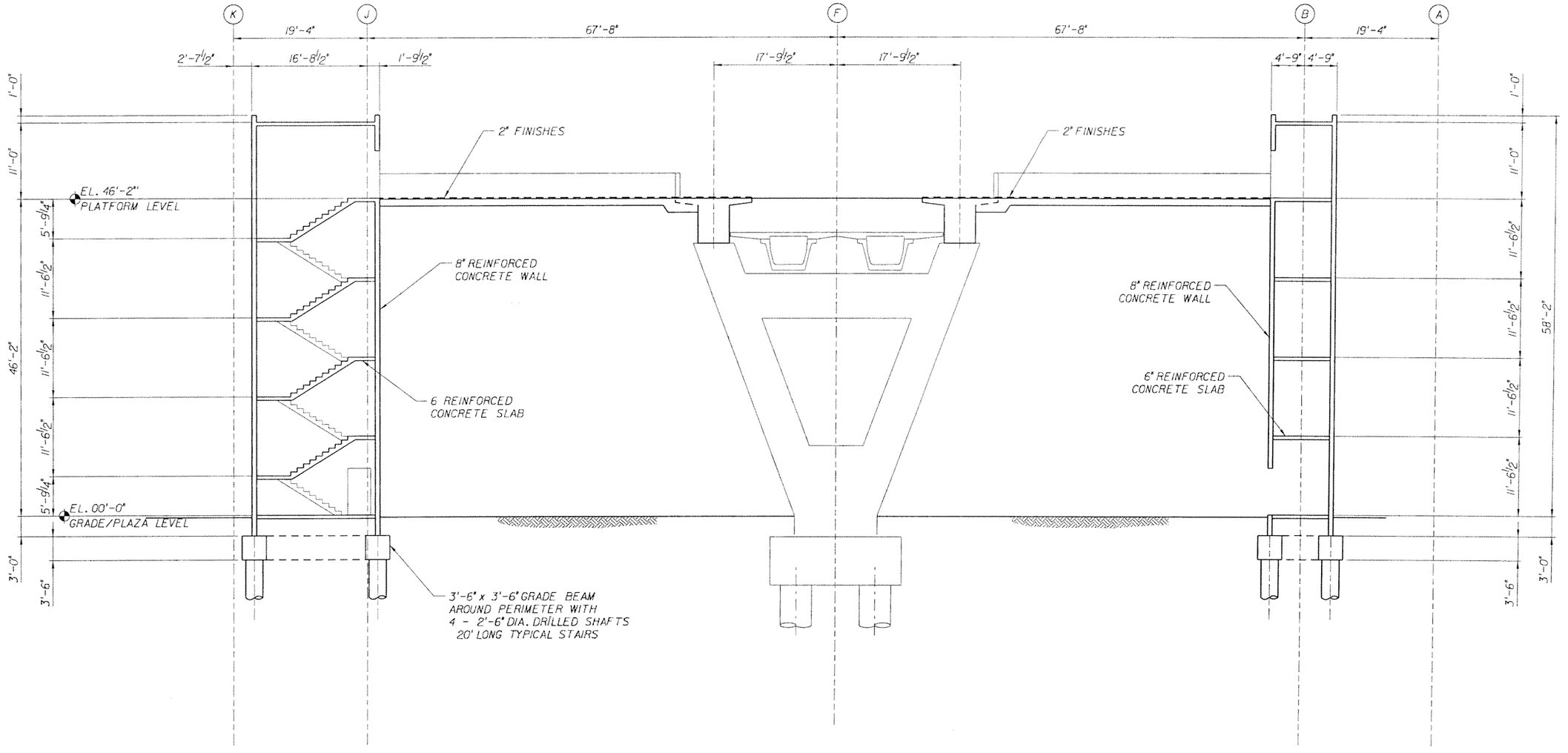

SECTION G-G

NOTE:
TO THE BEST OF OUR KNOWLEDGE THIS PLAN AND THE SPECIFICATIONS APPLYING TO IT COMPLY WITH APPLICABLE MINIMUM BUILDING CODE

SUBJECT TO CHANGE

CS/DY Designed by	MAY 2006 Date						NORTH CORRIDOR METRORAIL EXTENSION - PRELIMINARY ENGINEERING (100% SUBMITTAL)
PSG Drawn by	MAY 2006 Date						STRUCTURES - STATION
CS Checked by	MAY 2006 Date						NW 82nd STREET SECTION SHEET 5 OF 7
Approved by	Date	No.	Date	By / Chk	App.	Revisions	

MIAMI-DADE TRANSIT

PARSONS
7600 CORPORATE CENTER DRIVE, SUITE 500
MIAMI, FLORIDA 33126
PHONE: (786) 464-1000 FAX: (786) 845-7119
CERTIFICATE OF AUTHORIZATION NO. 1838
Approved | Date

EarthTech
A Tyco International Ltd Company
Reynaldo R. Rivas, P.E.
Florida License No. 41174
3750 NW 87th Avenue, Suite 300
Miami, FL 33178
Certificate of Authorization No. 8115
Approved | Date

Scale 1/8" = 1'-0" | Drawing SSP-S1-10 | Sheet 103

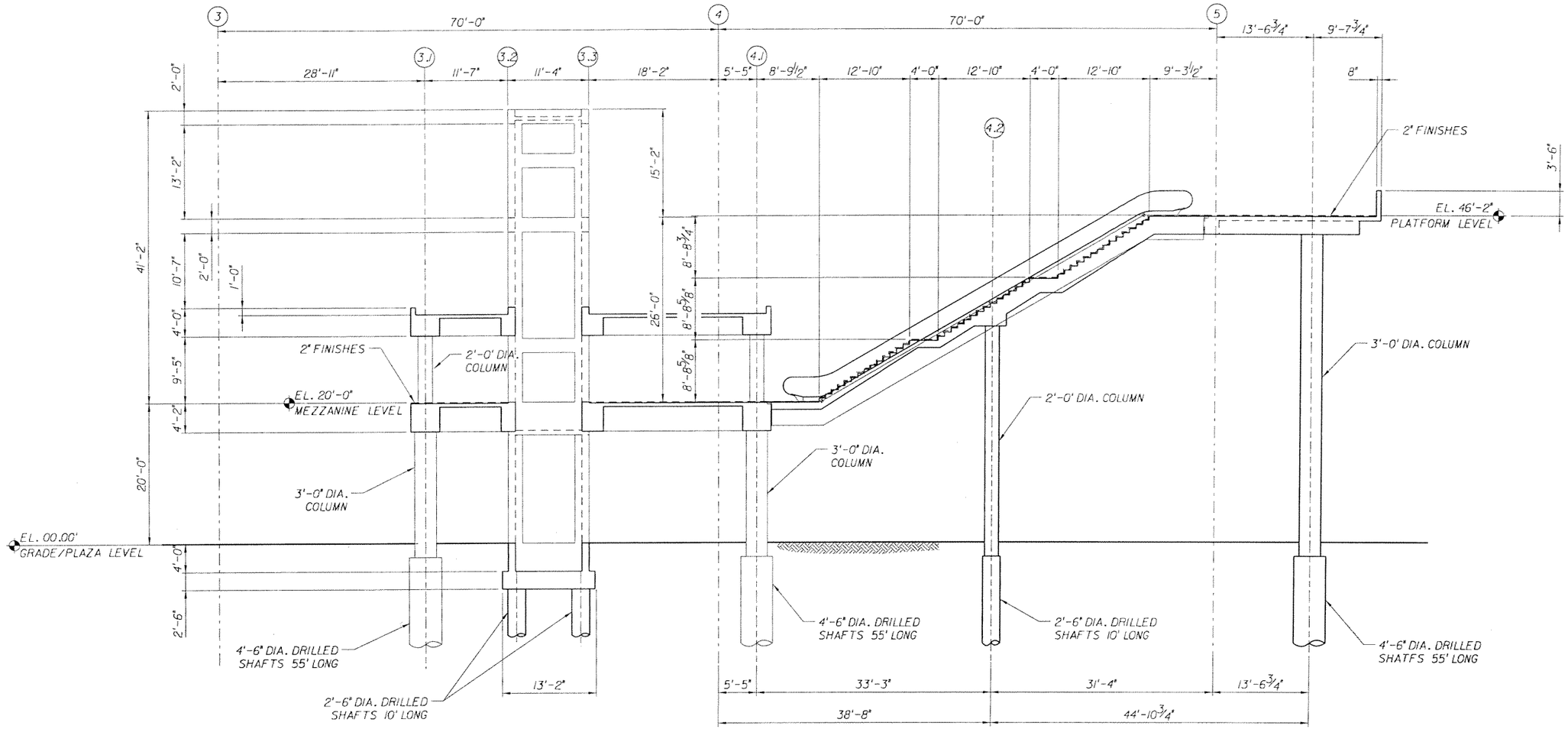

SECTION H-H

NOTE:
TO THE BEST OF OUR KNOWLEDGE THIS PLAN AND THE SPECIFICATIONS APPLYING TO IT COMPLY WITH APPLICABLE MINIMUM BUILDING CODE

SUBJECT TO CHANGE

CS/DY Designed by	MAY 2006 Date					
PSG Drawn by	MAY 2006 Date					
CS Checked by	MAY 2006 Date					
Approved by	Date	No.	Date	By / Chk	App.	Revisions

NORTH CORRIDOR METRORAIL EXTENSION - PRELIMINARY ENGINEERING (100% SUBMITTAL)

STRUCTURES - STATION

MIAMI-DADE TRANSIT

PARSONS
7600 CORPORATE CENTER DRIVE, SUITE 500
MIAMI, FLORIDA 33126
PHONE: (786) 464-1000 FAX: (786) 845-7119
CERTIFICATE OF AUTHORIZATION NO. 1638

Approved | Date

EarthTech
A Tyco International Ltd Company
Reynaldo R. Rivas, P.E.
Florida License No. 41174
3750 NW 87th Avenue, Suite 300
Miami, FL 33178
Certificate of Authorization No. 8115

Approved | Date

NW 82nd STREET
SECTION SHEET 6 OF 7

Scale 1/8" = 1'-0" | Drawing SSP-S1-11 | Sheet 104

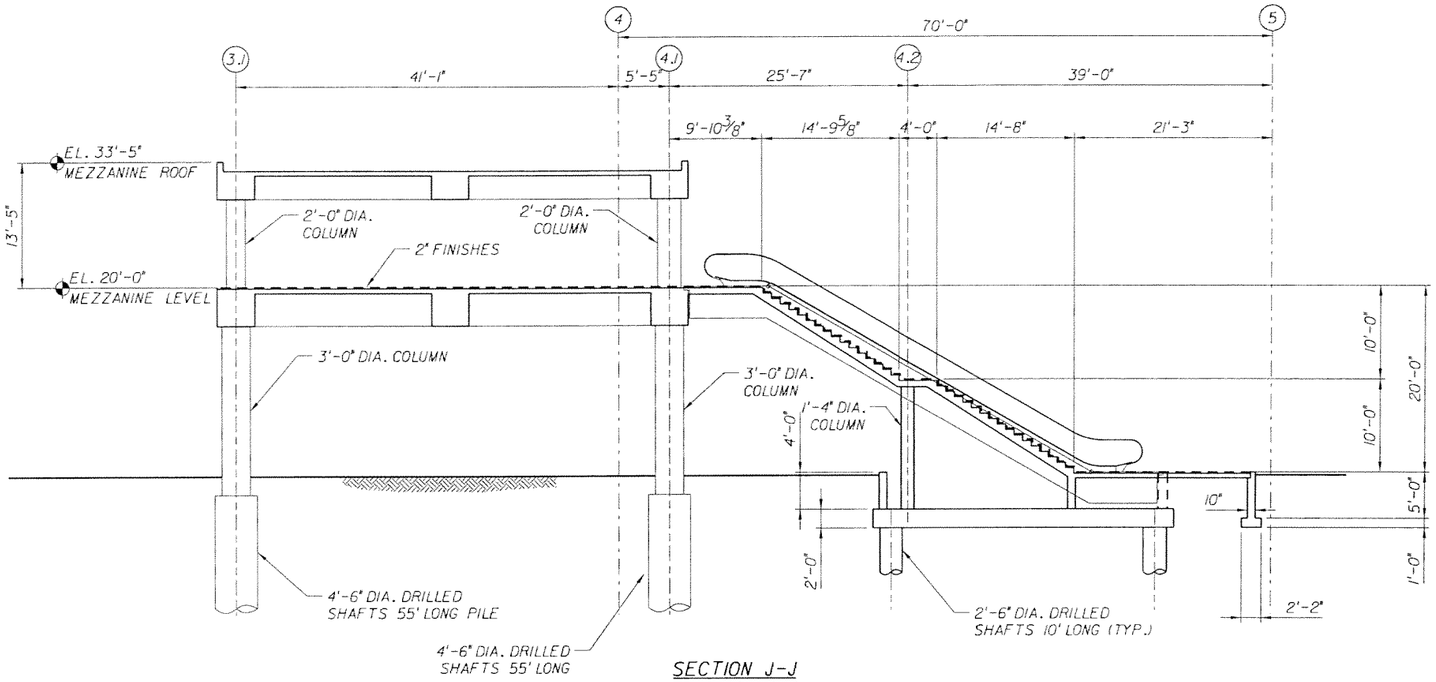

SECTION J-J
SCALE: 1/8" = 1'-0"

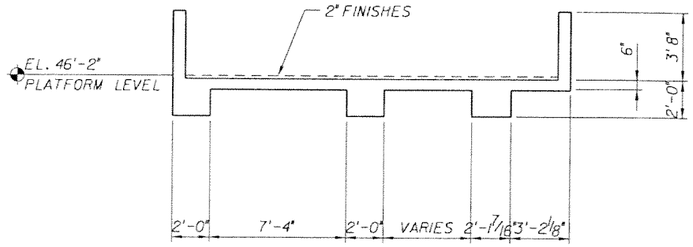

SECTION L-L
SCALE: 1/8" = 1'-0"

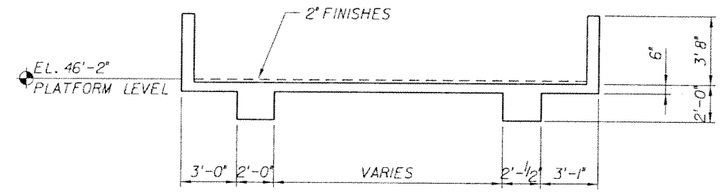

SECTION M-M
SCALE: 1/8" = 1'-0"

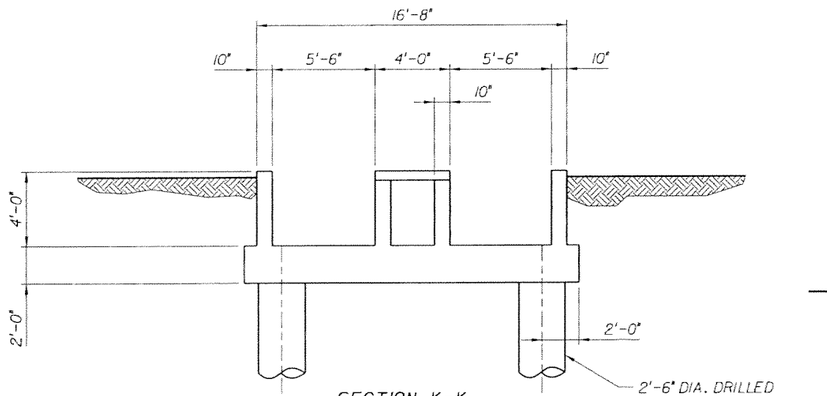

SECTION K-K
SCALE: 1/4" = 1'-0"

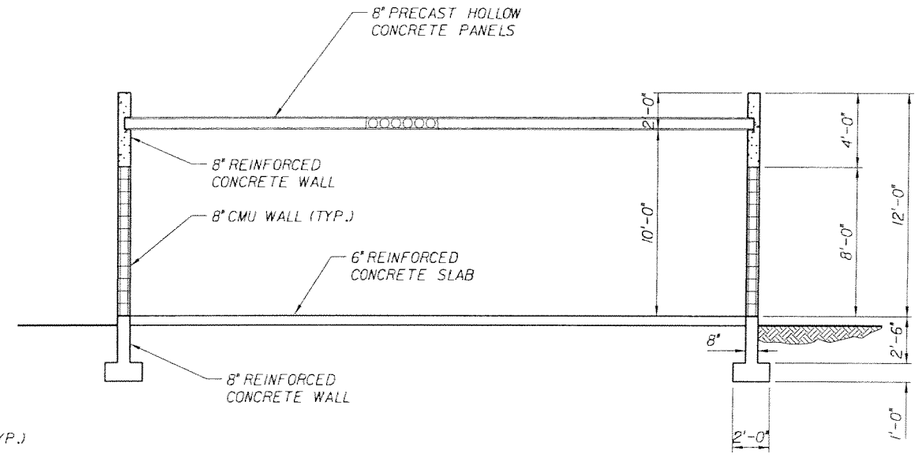

SECTION P-P
SCALE: 1/8" = 1'-0"

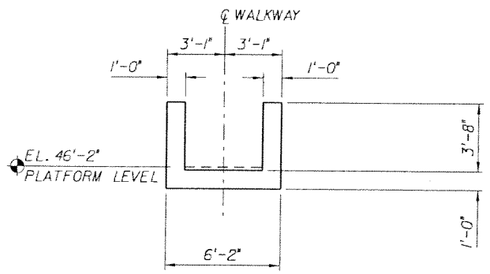

SECTION N-N
SCALE: 1/8" = 1'-0"

NOTE:
TO THE BEST OF OUR KNOWLEDGE THIS PLAN AND THE SPECIFICATIONS APPLYING TO IT COMPLY WITH APPLICABLE MINIMUM BUILDING CODE

SUBJECT TO CHANGE

CS/DY Designed by	MAY 2006 Date						
PSG Drawn by	MAY 2006 Date						
CS Checked by	MAY 2006 Date						
Approved by	Date	No.	Date	By / Chk	App.	Revisions	

NORTH CORRIDOR METRORAIL EXTENSION - PRELIMINARY ENGINEERING (100% SUBMITTAL)

STRUCTURES - STATION

MIAMI-DADE TRANSIT

PARSONS
7600 CORPORATE CENTER DRIVE, SUITE 500
MIAMI, FLORIDA 33126
PHONE: (786) 464-1000 FAX: (786) 845-7119
CERTIFICATE OF AUTHORIZATION NO. 1838

EarthTech
A Tyco International Ltd Company
Reynaldo A. Rivas, P.E.
Florida License No. 41174
3750 NW 87th Avenue, Suite 300
Miami, FL 33178
Certificate of Authorization No. 8115

Approved | Date | Approved | Date

NW 82nd STREET
SECTION SHEET 7 OF 7

Scale: AS NOTED | Drawing: SSP-S1-12 | Sheet: 105

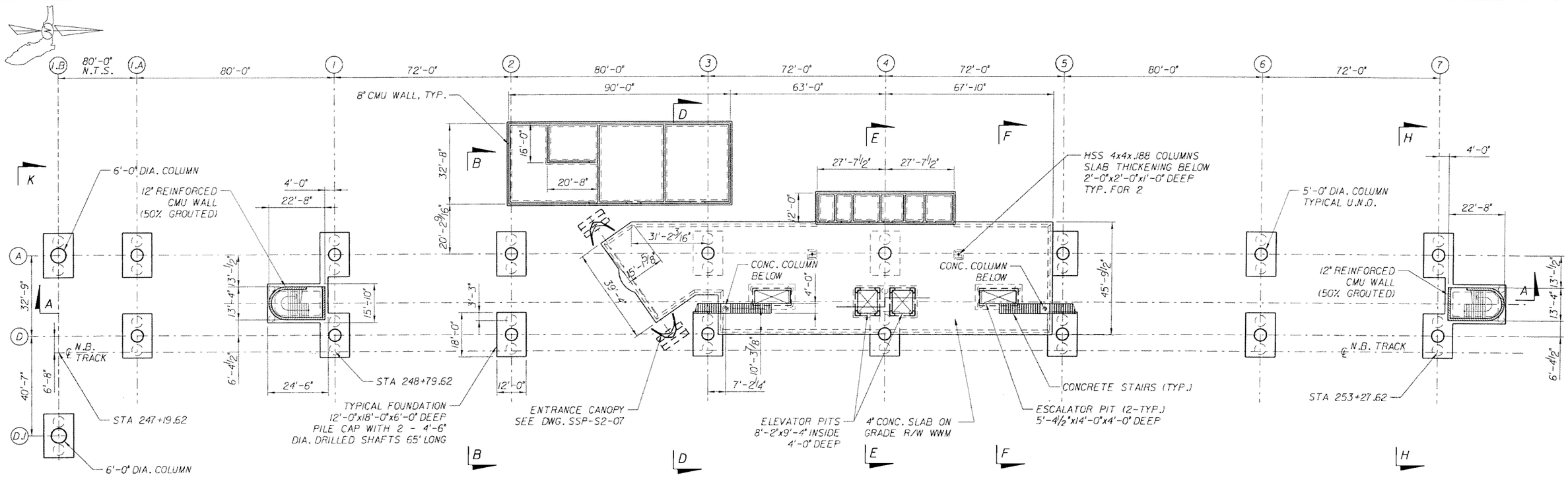

PLAZA PLAN

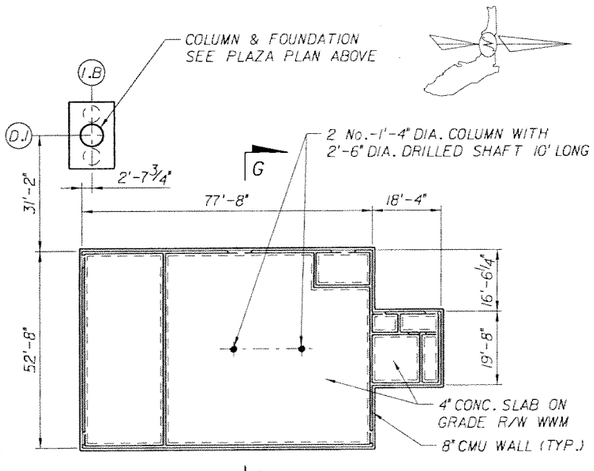

SUBSTATION PLAN

NOTE:
TO THE BEST OF OUR KNOWLEDGE THIS PLAN AND THE SPECIFICATIONS APPLYING TO IT COMPLY WITH APPLICABLE MINIMUM BUILDING CODE

SUBJECT TO CHANGE

CS/AKR	MAY, 2006					
Designed by	Date					
NH	MAY, 2006					
Drawn by	Date					
CS	MAY, 2006					
Checked by	Date					
Approved by	Date	No.	Date	By / Chk	App.	Revisions

NORTH CORRIDOR METRORAIL EXTENSION - PRELIMINARY ENGINEERING (100% SUBMITTAL)

STRUCTURES - STATION

MIAMI-DADE TRANSIT

PARSONS
7600 CORPORATE CENTER DRIVE, SUITE 500
MIAMI, FLORIDA 33126
PHONE: (786) 464-1000 FAX: (786) 845-7119
CERTIFICATE OF AUTHORIZATION NO. 1838

EarthTech
A Tyco International Ltd Company
Reynaldo R. Rivas, P.E.
Florida License No. 41174
3750 NW 87th Avenue, Suite 300
Miami, FL 33178
Certificate of Authorization No. 8115

Approved	Date	Approved	Date

NW 119th STREET
PLAZA LAYOUT PLAN

Scale	Drawing	Sheet
1"=20'	SSP-S2-01	106

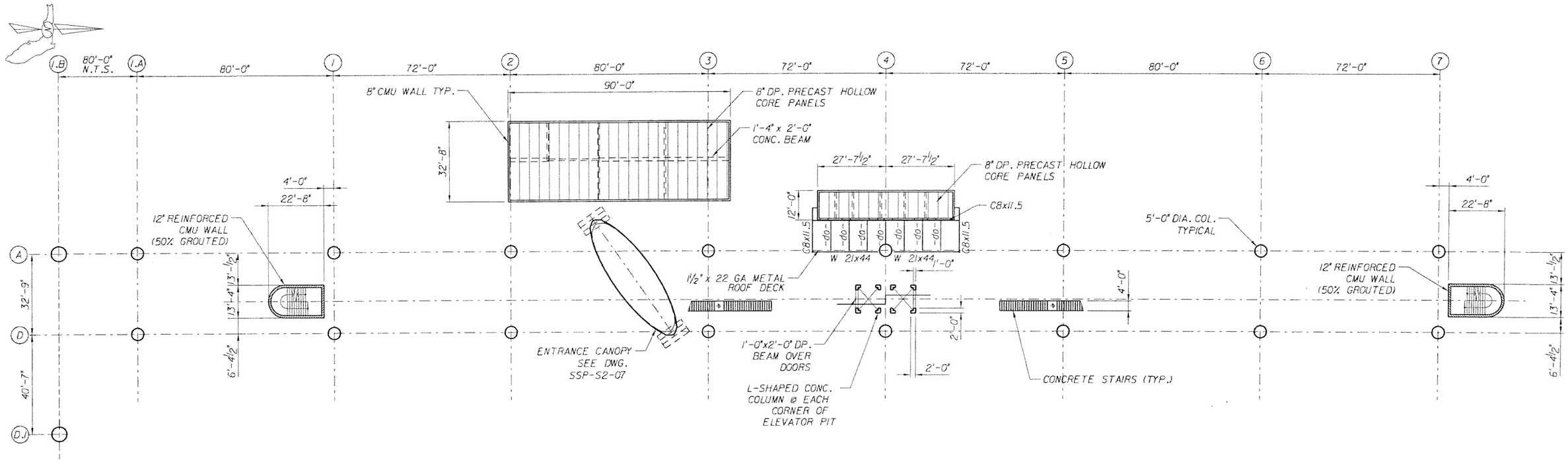

LOWER ROOF PLAN

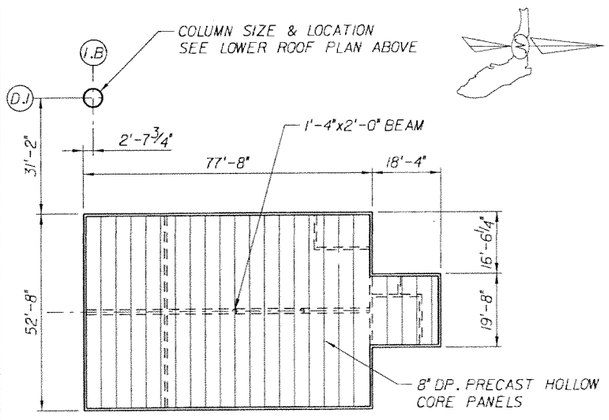

SUBSTATION ROOF PLAN

NOTE:
TO THE BEST OF OUR KNOWLEDGE THIS PLAN AND THE SPECIFICATIONS APPLYING TO IT COMPLY WITH APPLICABLE MINIMUM BUILDING CODE

SUBJECT TO CHANGE

CS/AKR Designed by	MAY, 2006 Date						
NH Drawn by	MAY, 2006 Date						
CS Checked by	MAY, 2006 Date						
Approved by	Date	No.	Date	By / Chk	App.	Revisions	

NORTH CORRIDOR METRORAIL EXTENSION - PRELIMINARY ENGINEERING (100% SUBMITTAL)

STRUCTURES - STATION

MIAMI-DADE TRANSIT

PARSONS
7600 CORPORATE CENTER DRIVE, SUITE 500
MIAMI, FLORIDA 33126
PHONE: (786) 464-1000 FAX: (786) 845-7119
CERTIFICATE OF AUTHORIZATION NO. 1838

Approved | Date

EarthTech
A Tyco International Ltd Company
Reynaldo R. Rivas, P.E.
Florida License No. 41174
3750 NW 87th Avenue, Suite 300
Miami, FL 33178
Certificate of Authorization No. 8115

Approved | Date

NW 119th STREET
LOWER ROOF PLANS

Scale	Drawing	Sheet
1"=20'	SSP-S2-02	107

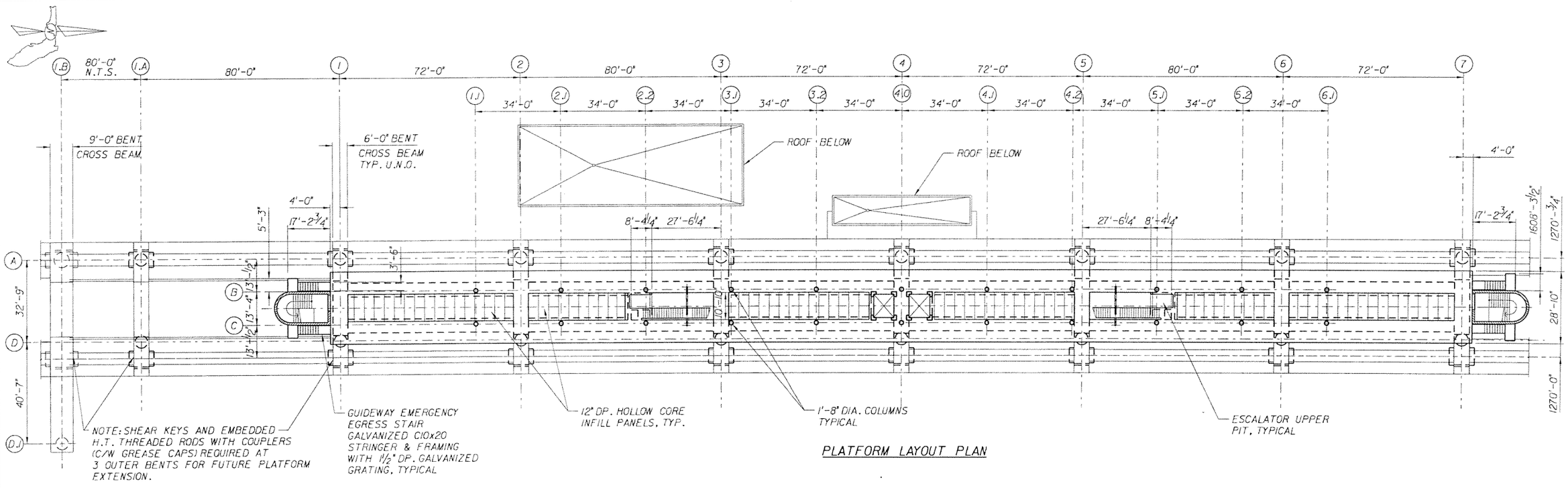

PLATFORM LAYOUT PLAN

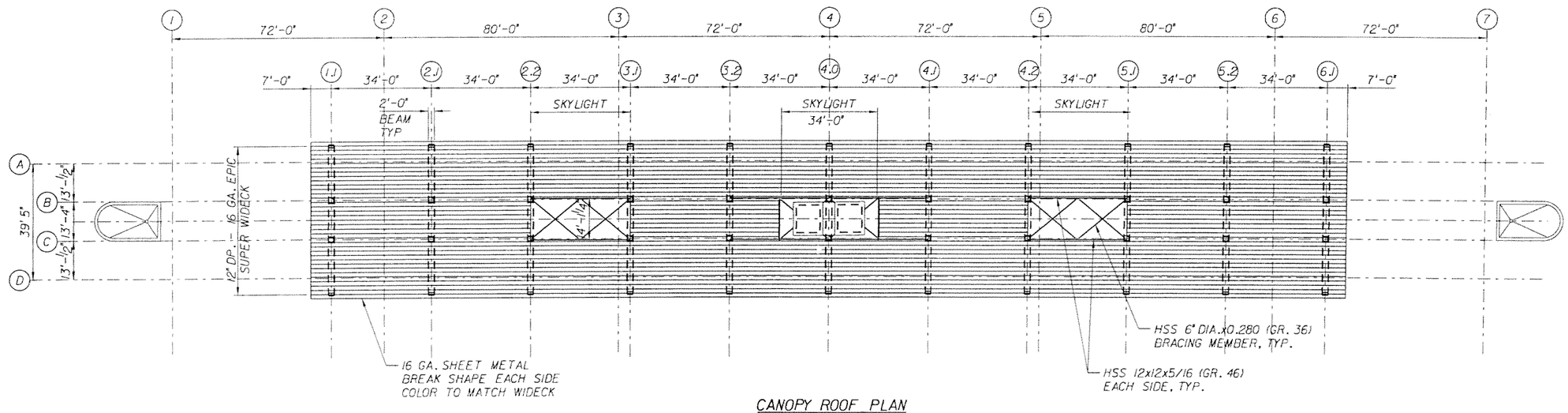

CANOPY ROOF PLAN

NOTE:
TO THE BEST OF OUR KNOWLEDGE THIS PLAN AND THE SPECIFICATIONS APPLYING TO IT COMPLY WITH APPLICABLE MINIMUM BUILDING CODE

SUBJECT TO CHANGE

CS/DY	MAY 2006					
Designed by	Date					
NH	MAY 2006					
Drawn by	Date					
CS	MAY 2006					
Checked by	Date					
Approved by	Date	No.	Date	By / Chk	App.	Revisions

NORTH CORRIDOR METRORAIL EXTENSION - PRELIMINARY ENGINEERING (100% SUBMITTAL)

MIAMI-DADE TRANSIT

PARSONS
7600 CORPORATE CENTER DRIVE, SUITE 500
MIAMI, FLORIDA 33126
PHONE: (786) 464-1000 FAX: (786) 845-7119
CERTIFICATE OF AUTHORIZATION NO. 1838

EarthTech
A Tyco International Ltd Company
Reynaldo R. Rivas, P.E.
Florida License No. 41174
3750 NW 87th Avenue, Suite 300
Miami, FL 33178
Certificate of Authorization No. 8115

Approved	Date	Approved	Date

STRUCTURES - STATION

NW 119th STREET PLATFORM LAYOUT AND CANOPY ROOF PLAN

Scale	Drawing	Sheet
1"=20'	SSP-S2-03	108

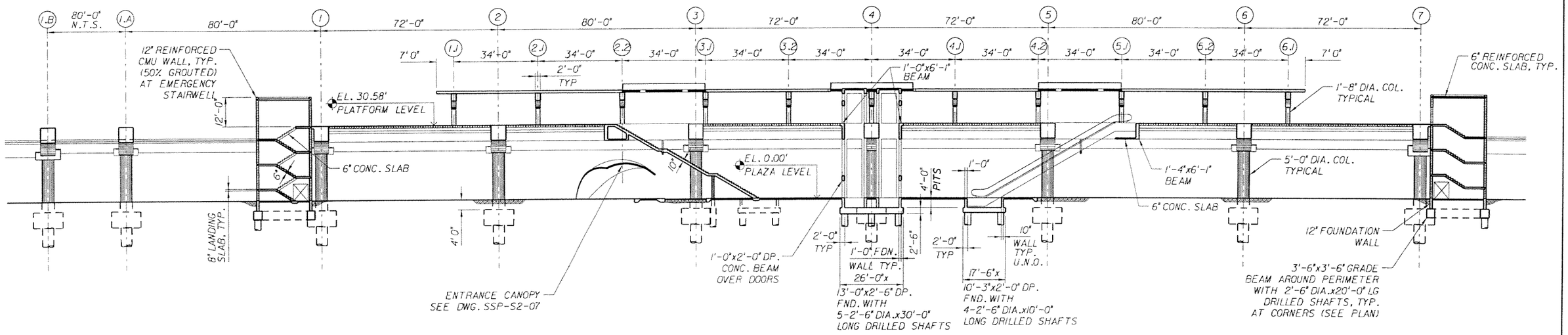

LONGITUDINAL SECTION A-A

SCALE: 1"=20'

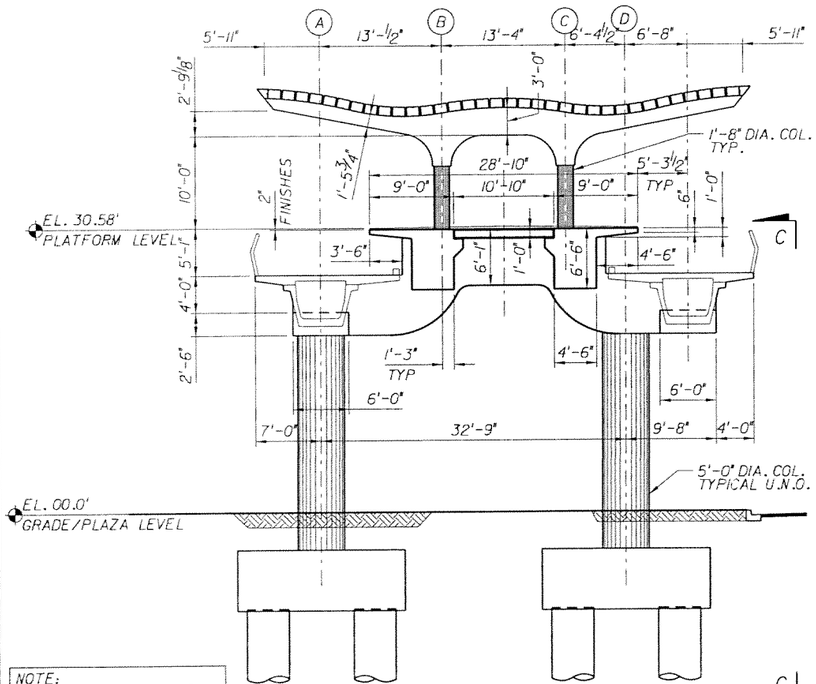

NOTE:
TO THE BEST OF OUR KNOWLEDGE THIS PLAN AND THE SPECIFICATIONS APPLYING TO IT COMPLY WITH APPLICABLE MINIMUM BUILDING CODE

SECTION B-B (TYPICAL)

SCALE: 1/8"=1'-0"

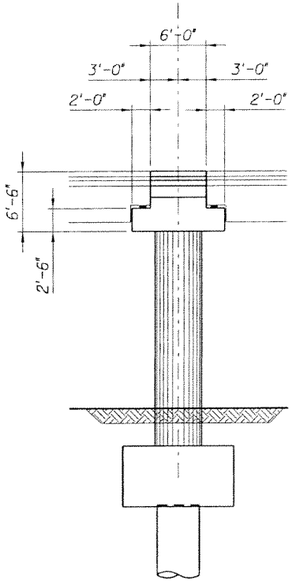

SECTION C-C

SCALE: 1/8"=1'-0"

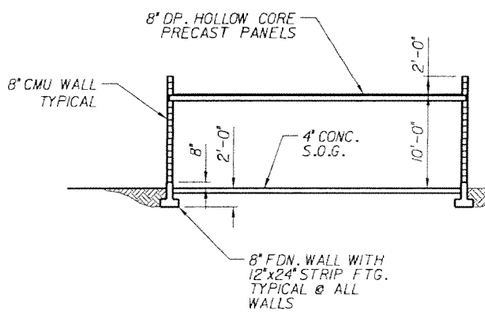

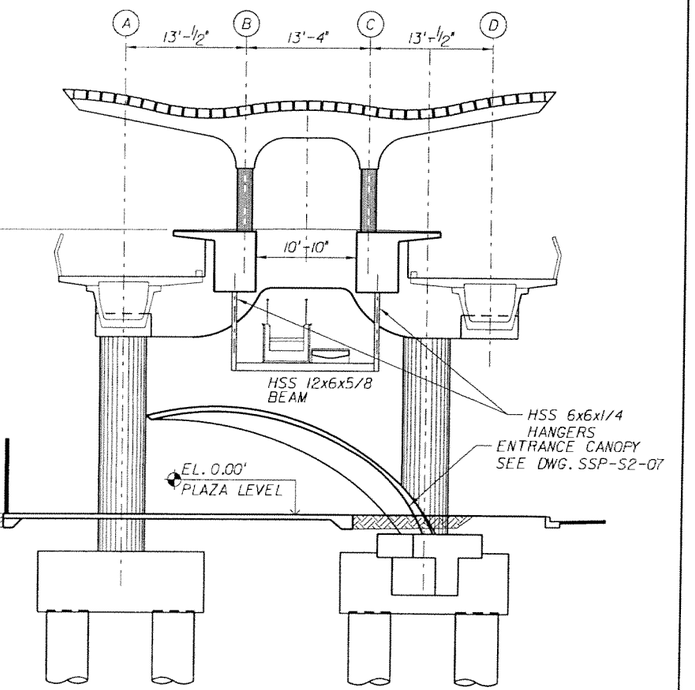

SECTION D-D

SCALE: 1/8"=1'-0"

SUBJECT TO CHANGE

CS/AKR Designed by	MAY 2006 Date						
NH Drawn by	MAY 2006 Date						
CS Checked by	MAY 2006 Date						
Approved by	Date	No.	Date	By / Chk	App.	Revisions	

NORTH CORRIDOR METRORAIL EXTENSION - PRELIMINARY ENGINEERING (100% SUBMITTAL)

STRUCTURES - STATION

MIAMI-DADE TRANSIT

PARSONS
7600 CORPORATE CENTER DRIVE, SUITE 500
MIAMI, FLORIDA 33126
PHONE: (786) 454-1000 FAX: (786) 845-7119
CERTIFICATE OF AUTHORIZATION NO. 1838
Approved Date

EarthTech
A Tyco International Ltd Company
Reynaldo R. Rivas, P.E.
Florida License No. 41174
3750 NW 87th Avenue, Suite 300
Miami, FL 33178
Certificate of Authorization No. 8115
Approved Date

NW 119th STREET
SECTION SHEET 1 of 3

Scale AS NOTED | Drawing SSP-S2-04 | Sheet 109

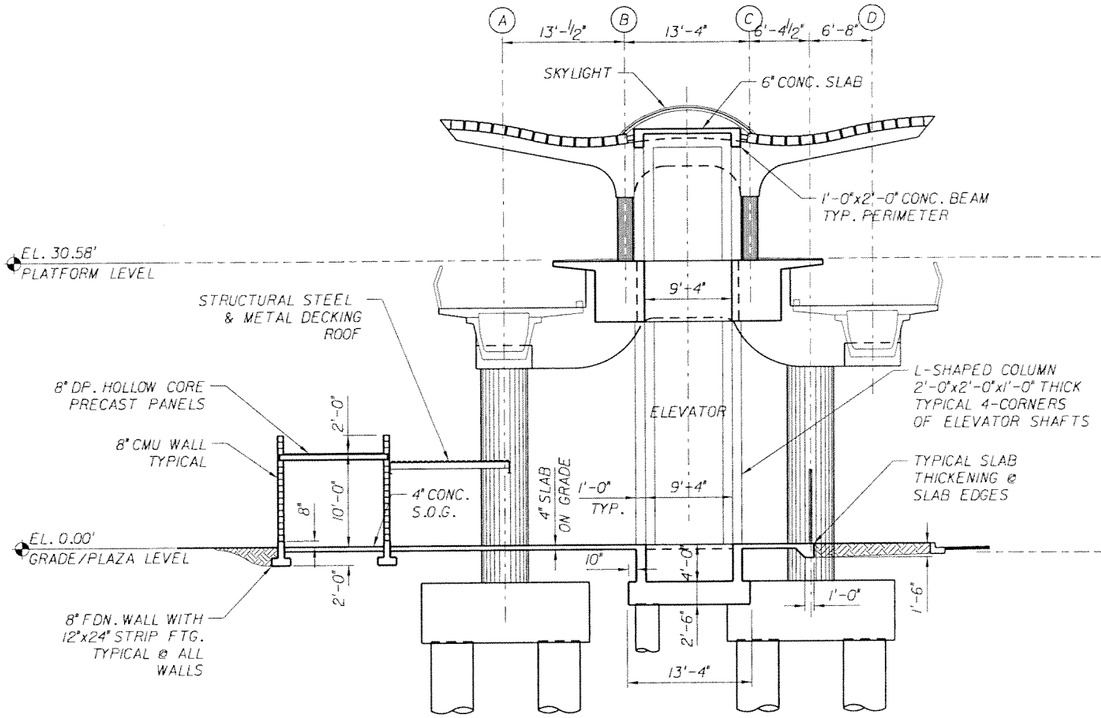

SECTION E-E

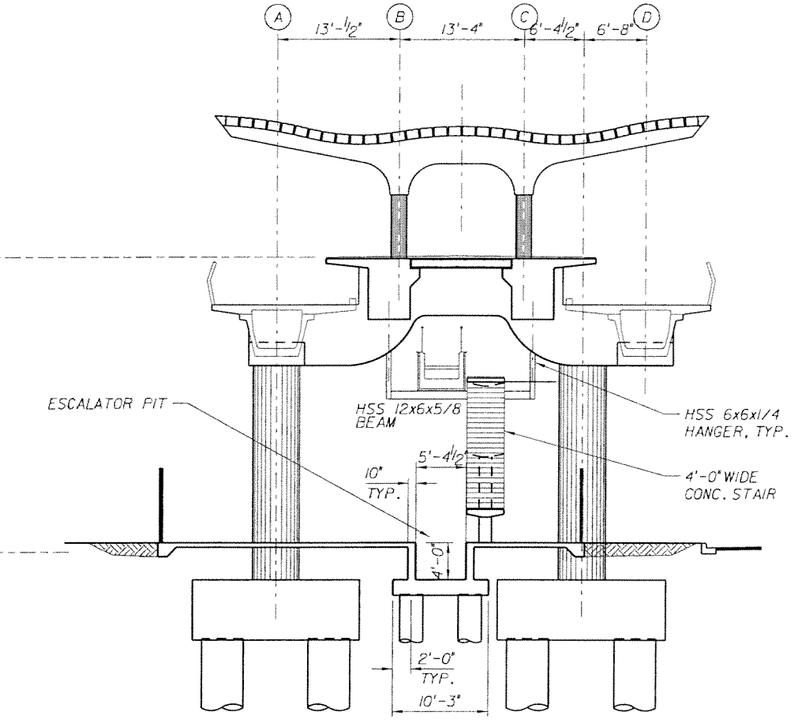

SECTION F-F

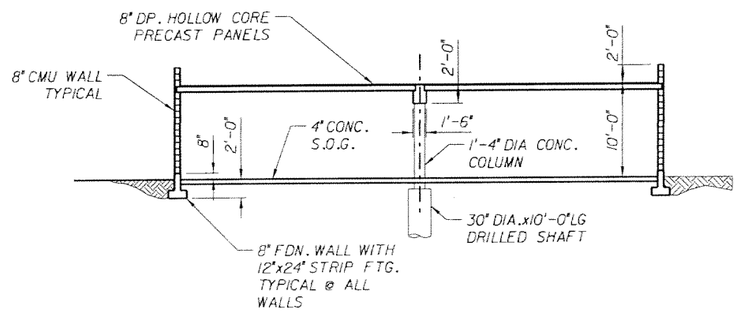

SECTION THROUGH SUBSTATION

SECTION G-G

NOTE:
TO THE BEST OF OUR KNOWLEDGE THIS PLAN AND THE SPECIFICATIONS APPLYING TO IT COMPLY WITH APPLICABLE MINIMUM BUILDING CODE

SUBJECT TO CHANGE

CS/AKR Designed by	MAY 2006 Date					
NH Drawn by	MAY 2006 Date					
CS Checked by	MAY 2006 Date					
Approved by	Date	No.	Date	By / Chk	App.	Revisions

NORTH CORRIDOR METRORAIL EXTENSION - PRELIMINARY ENGINEERING (100% SUBMITTAL)

STRUCTURES - STATION

MIAMI-DADE TRANSIT

PARSONS
7600 CORPORATE CENTER DRIVE, SUITE 500
MIAMI, FLORIDA 33126
PHONE: (786) 464-1000 FAX: (786) 845-7119
CERTIFICATE OF AUTHORIZATION NO. 1838

Approved | Date

EarthTech
A Tyco International Ltd Company
Reynaldo R. Rivas, P.E.
Florida License No. 41174
3750 NW 87th Avenue, Suite 300
Miami, FL 33178
Certificate of Authorization No. 8115

Approved | Date

NW 119th STREET
SECTION SHEET 2 of 3

Scale 1/8" = 1'-0" | Drawing SSP-S2-05 | Sheet 10

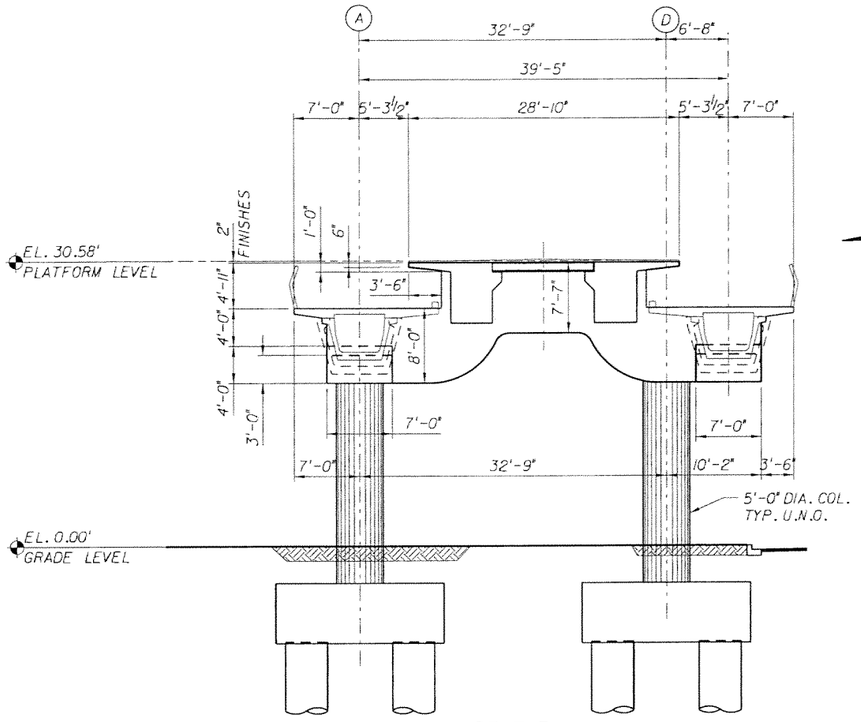

BENT 7

SECTION H-H

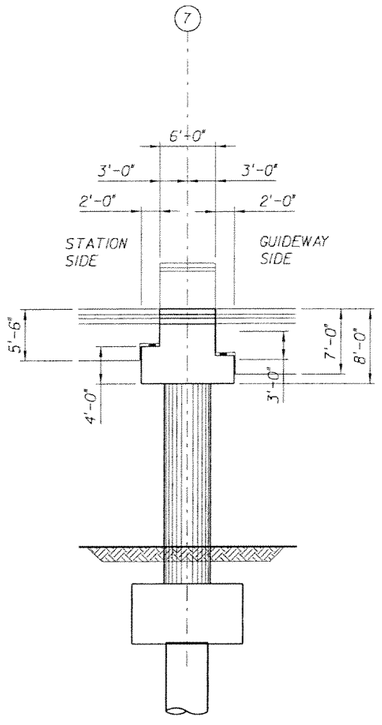

SECTION J-J

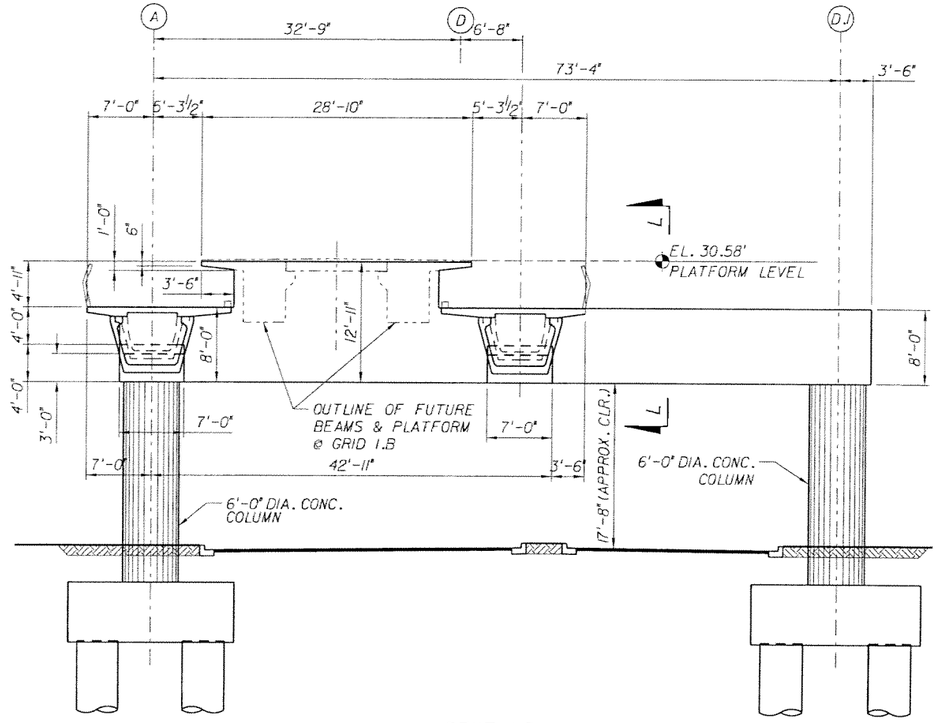

BENT 1.B

SECTION K-K

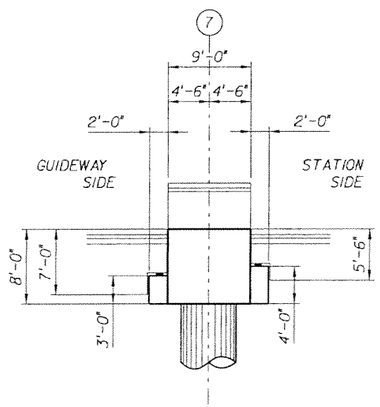

SECTION L-L

NOTE:
TO THE BEST OF OUR KNOWLEDGE THIS PLAN AND THE SPECIFICATIONS APPLYING TO IT COMPLY WITH APPLICABLE MINIMUM BUILDING CODE

SUBJECT TO CHANGE

CS/AKR MAY 2006 Designed by Date						NORTH CORRIDOR METRORAIL EXTENSION - PRELIMINARY ENGINEERING (100% SUBMITTAL)
CS MAY 2006 Drawn by Date						STRUCTURES - STATION
CS MAY 2006 Checked by Date						NW 119th STREET SECTION SHEET 3 of 3
Approved by Date	No.	Date	By / Chk	App.	Revisions	

MIAMI-DADE TRANSIT

PARSONS
7600 CORPORATE CENTER DRIVE, SUITE 500
MIAMI, FLORIDA 33126
PHONE: (786) 464-1000 FAX: (786) 845-7119
CERTIFICATE OF AUTHORIZATION NO. 1838
Approved Date

EarthTech
A Tyco International Ltd Company
Reynaldo R. Rivas, P.E.
Florida License No. 41174
3750 NW 87th Avenue, Suite 300
Miami, FL 33178
Certificate of Authorization No. 8115
Approved Date

Scale 1/8" = 1'-0" | Drawing SSP-S2-06 | Sheet

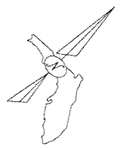

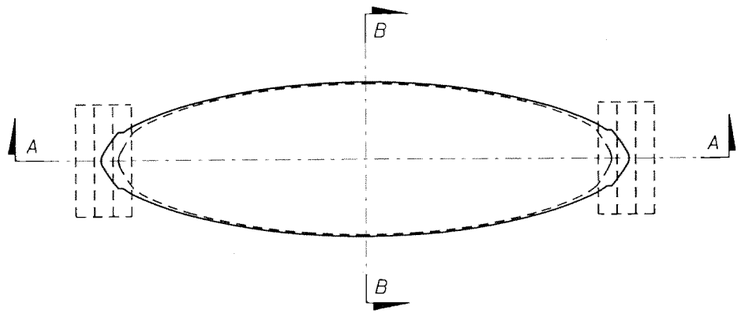

ENTRANCE CANOPY PLAN

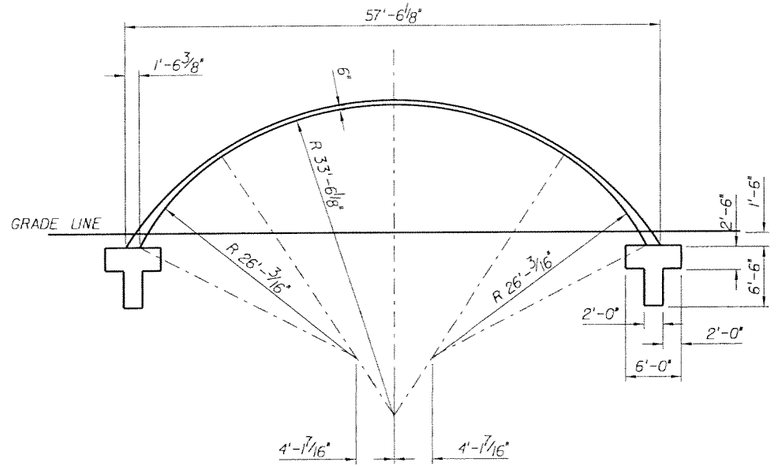

SECTION A-A

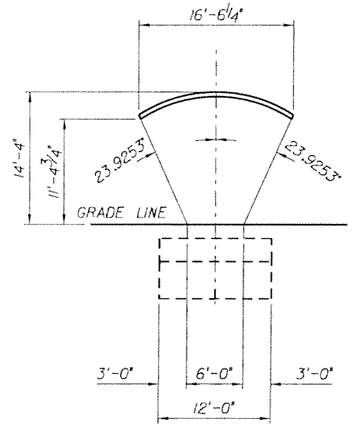

SECTION B-B

NOTE:
TO THE BEST OF OUR KNOWLEDGE THIS PLAN AND THE SPECIFICATIONS APPLYING TO IT COMPLY WITH APPLICABLE MINIMUM BUILDING CODE

SUBJECT TO CHANGE

CS/AKR MAY 2006 Designed by Date						
CS MAY 2006 Drawn by Date						
CS MAY 2006 Checked by Date						
Approved by Date	No.	Date	By / Chk	App.	Revisions	

NORTH CORRIDOR METRORAIL EXTENSION - PRELIMINARY ENGINEERING (100% SUBMITTAL)

MIAMI-DADE TRANSIT

PARSONS
7600 CORPORATE CENTER DRIVE, SUITE 500
MIAMI, FLORIDA 33126
PHONE: (786) 464-1000 FAX: (786) 845-7119
CERTIFICATE OF AUTHORIZATION NO. 1838
Approved | Date

EarthTech
A Tyco International Ltd Company
Reynaldo R. Rivas, P.E.
Florida License No. 41174
3750 NW 87th Avenue, Suite 300
Miami, FL 33178
Certificate of Authorization No. 8115
Approved | Date

STRUCTURES - STATION

NW 119th STREET
ENTRANCE ROOF SHELL
STRUCTURE DETAILS

Scale 1/8"=1'-0" | Drawing SSP-S2-07 | Sheet 117

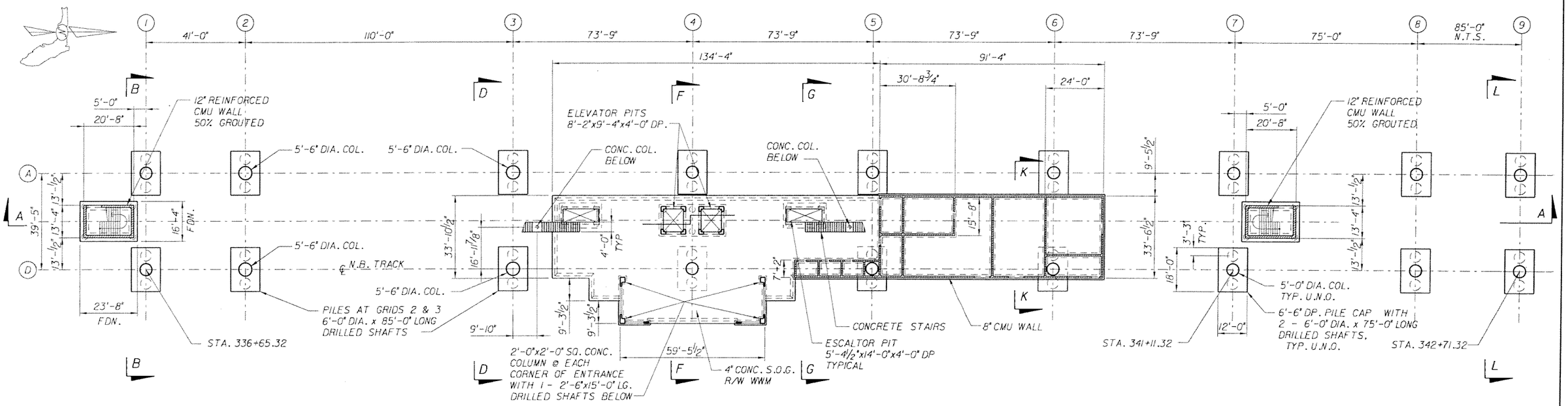

PLAZA PLAN

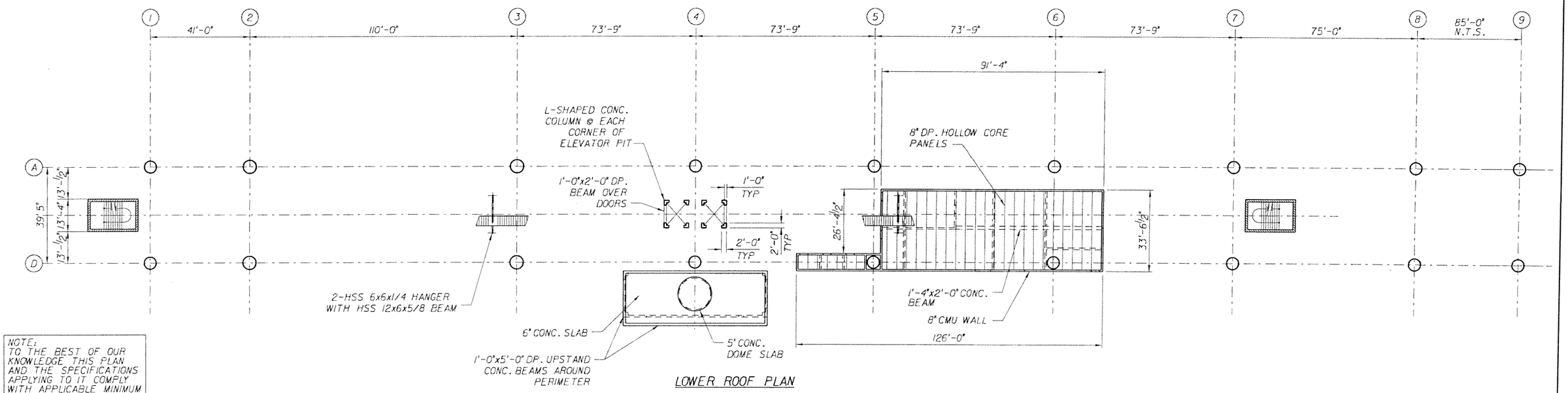

LOWER ROOF PLAN

NOTE:
TO THE BEST OF OUR KNOWLEDGE THIS PLAN AND THE SPECIFICATIONS APPLYING TO IT COMPLY WITH APPLICABLE MINIMUM BUILDING CODE

SUBJECT TO CHANGE

CS/AKR Designed by	MAY 2006 Date					
NH Drawn by	MAY 2006 Date					
CS Checked by	MAY 2006 Date					
Approved by	Date	No.	Date	By / Chk	App.	Revisions

NORTH CORRIDOR METRORAIL EXTENSION - PRELIMINARY ENGINEERING (100% SUBMITTAL)

STRUCTURES - STATION

MIAMI-DADE TRANSIT

PARSONS
7600 CORPORATE CENTER DRIVE, SUITE 500
MIAMI, FLORIDA 33126
PHONE: (786) 464-1000 FAX: (786) 845-7119
CERTIFICATE OF AUTHORIZATION NO. 1638

Approved | Date

EarthTech
A Tyco International Ltd Company
Reynaldo R. Rivas, P.E.
Florida License No. 41174
3750 NW 87th Avenue, Suite 300
Miami, FL 33178
Certificate of Authorization No. 8115

Approved | Date

ALI BABA AVENUE PLAZA LAYOUT AND LOWER ROOF PLANS

Scale: 1"=20' | Drawing: SSP-S3-01 | Sheet: 113

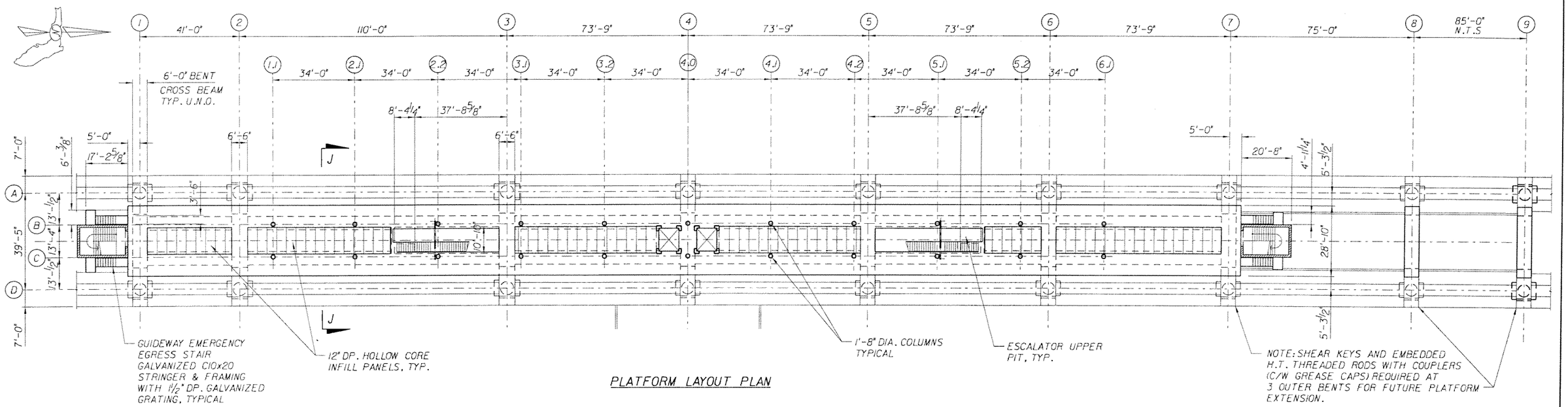

PLATFORM LAYOUT PLAN

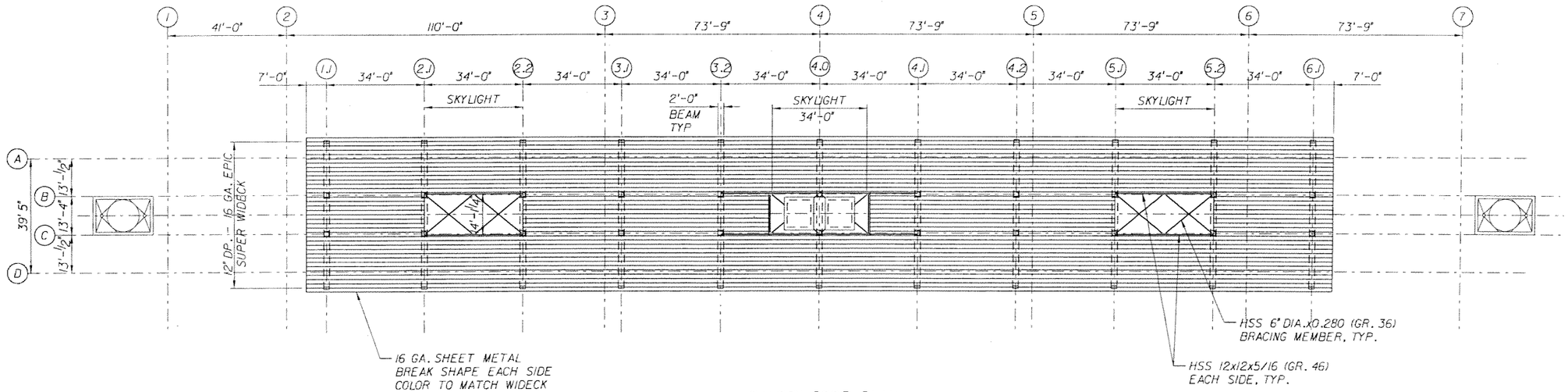

CANOPY ROOF PLAN

NOTE:
TO THE BEST OF OUR KNOWLEDGE THIS PLAN AND THE SPECIFICATIONS APPLYING TO IT COMPLY WITH APPLICABLE MINIMUM BUILDING CODE

SUBJECT TO CHANGE

CS/AKR Designed by	MAY 2006 Date					
NH Drawn by	MAY 2006 Date					
CS Checked by	MAY 2006 Date					
Approved by	Date	No.	Date	By / Chk	App.	Revisions

NORTH CORRIDOR METRORAIL EXTENSION - PRELIMINARY ENGINEERING (100% SUBMITTAL)

MIAMI-DADE TRANSIT

PARSONS
7600 CORPORATE CENTER DRIVE, SUITE 500
MIAMI, FLORIDA 33126
PHONE: (786) 464-1000 FAX: (786) 845-7119
CERTIFICATE OF AUTHORIZATION NO. 1638

Approved | Date

EarthTech
A Tyco International Ltd Company
Reynaldo R. Rivas, P.E.
Florida License No. 41174
3750 NW 87th Avenue, Suite 300
Miami, FL 33178
Certificate of Authorization No. 8115

Approved | Date

STRUCTURES - STATION

ALI BABA AVENUE PLATFORM LAYOUT AND CANOPY ROOF PLANS

Scale 1"=20' | Drawing SSP-S3-02 | Sheet 114

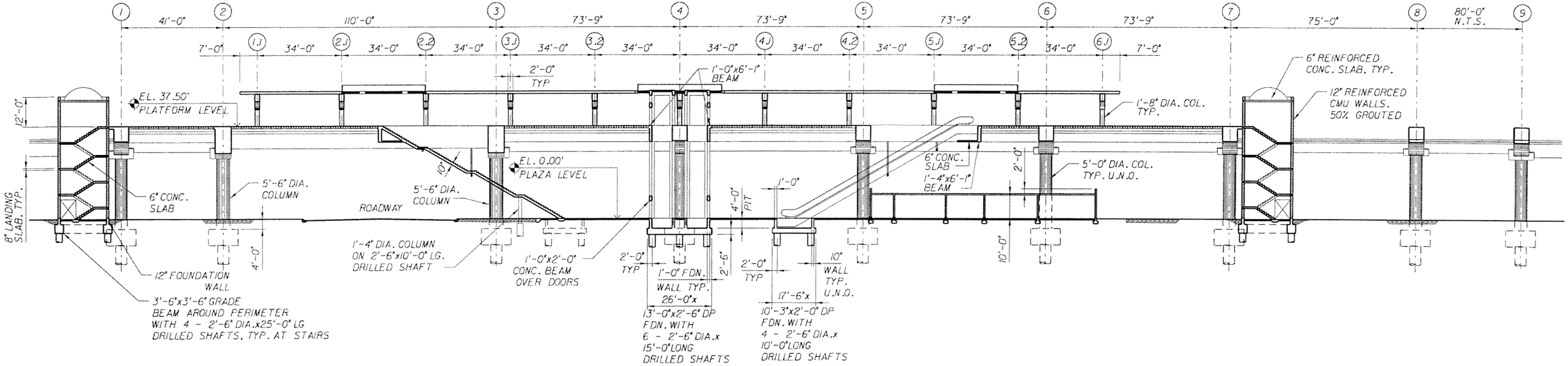

LONGITUDINAL SECTION A-A

SCALE: 1"=20'

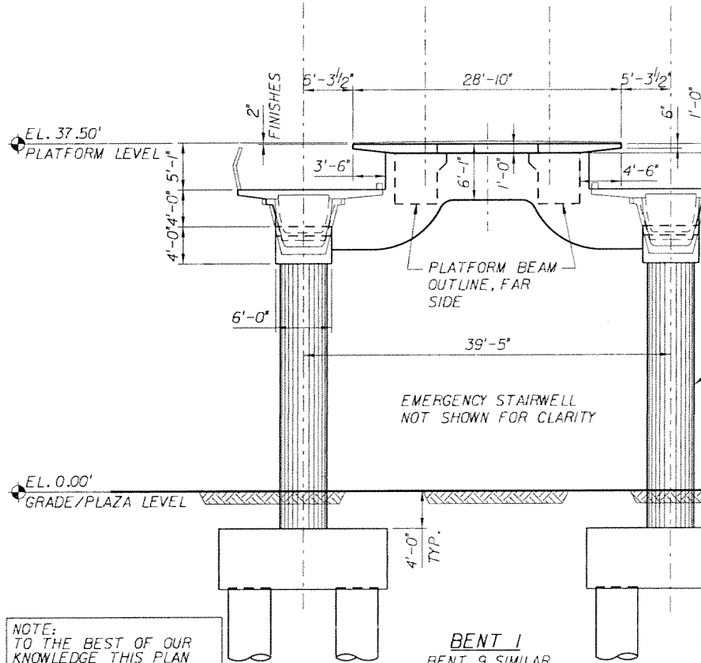

BENT 1

BENT 9 SIMILAR

SECTION B-B

SCALE: 1/8"=1'-0"

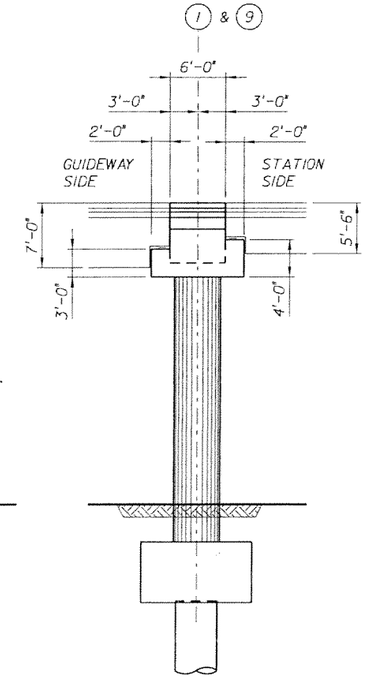

SECTION C-C

SCALE: 1/8"=1'-0"

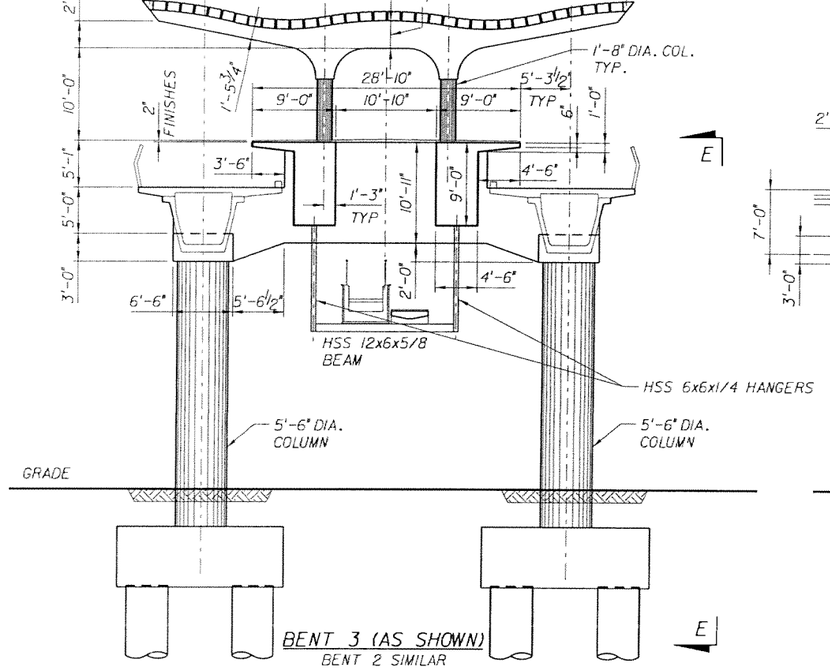

BENT 3 (AS SHOWN)

BENT 2 SIMILAR

SECTION D-D

SCALE: 1/8"=1'-0"

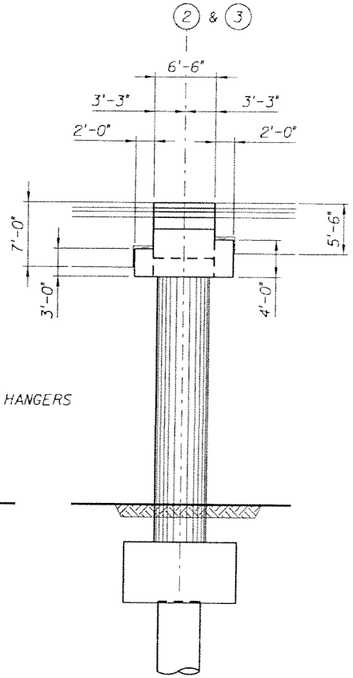

SECTION E-E

SCALE: 1/8"=1'-0"

NOTE:
TO THE BEST OF OUR KNOWLEDGE THIS PLAN AND THE SPECIFICATIONS APPLYING TO IT COMPLY WITH APPLICABLE MINIMUM BUILDING CODE

SUBJECT TO CHANGE

CS/AKR Designed by	MAY 2006 Date					
NH Drawn by	MAY 2006 Date					
CS Checked by	MAY 2006 Date					
Approved by	Date	No.	Date	By / Chk	App.	Revisions

NORTH CORRIDOR METRORAIL EXTENSION - PRELIMINARY ENGINEERING (100% SUBMITTAL)

STRUCTURES - STATION

MIAMI-DADE TRANSIT

PARSONS
7600 CORPORATE CENTER DRIVE, SUITE 500
MIAMI, FLORIDA 33126
PHONE: (786) 464-1000 FAX: (786) 845-7119
CERTIFICATE OF AUTHORIZATION NO. 1836
Approved Date

EarthTech
A Tyco International Ltd Company
Reynaldo R. Rivas, P.E.
Florida License No. 41174
3750 NW 87th Avenue, Suite 300
Miami, FL 33178
Certificate of Authorization No. 8115
Approved Date

ALI BABA AVENUE
SECTION SHEET 1 of 3

Scale AS NOTED | Drawing SSP-S3-03 | Sheet 115

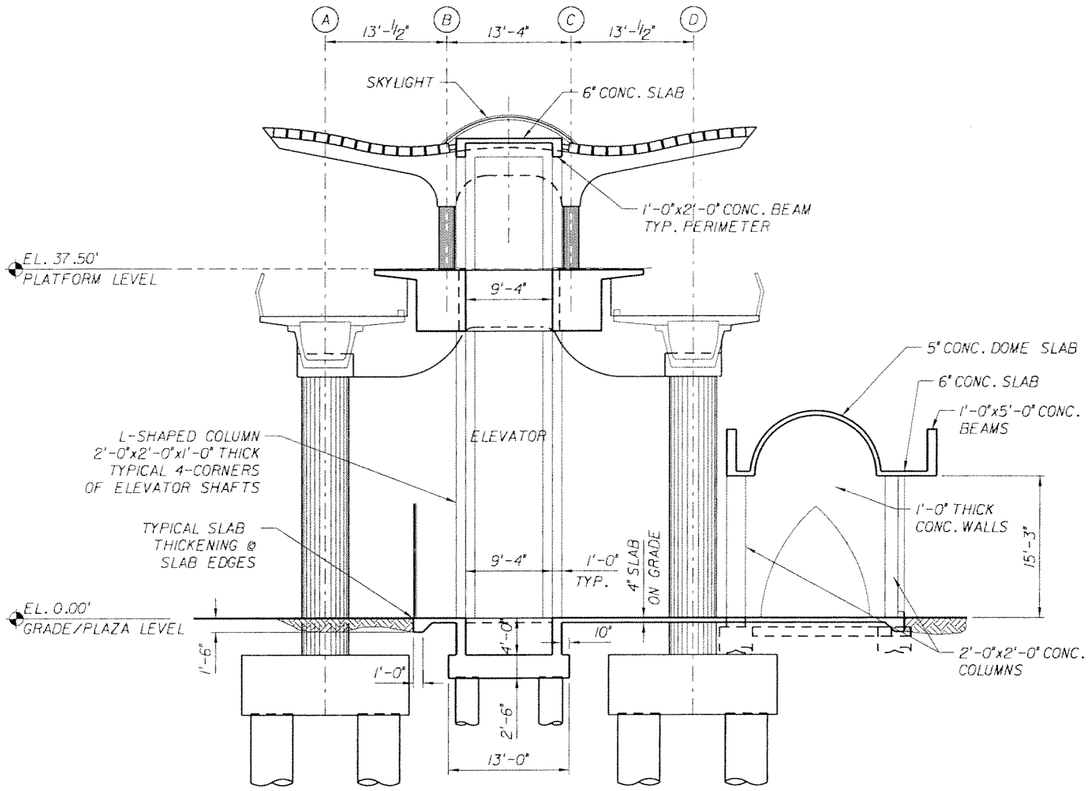

SECTION F-F

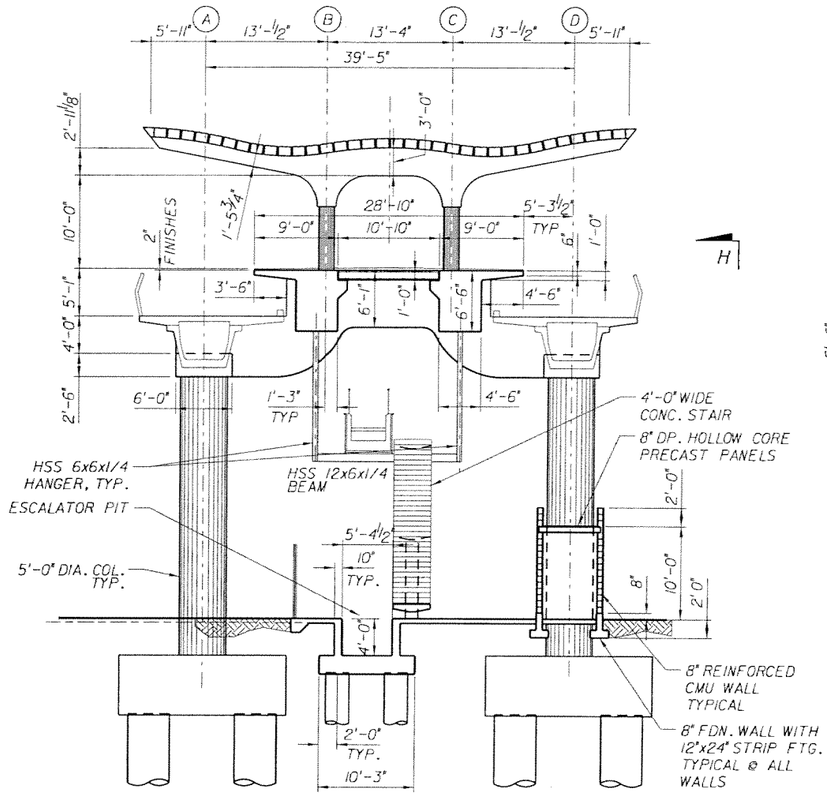

NOTE: TYPICAL BENT CROSS BEAM, PLATFORM AND COLUMN DIMENSIONS AND LAYOUT SHOWN.

SECTION G-G

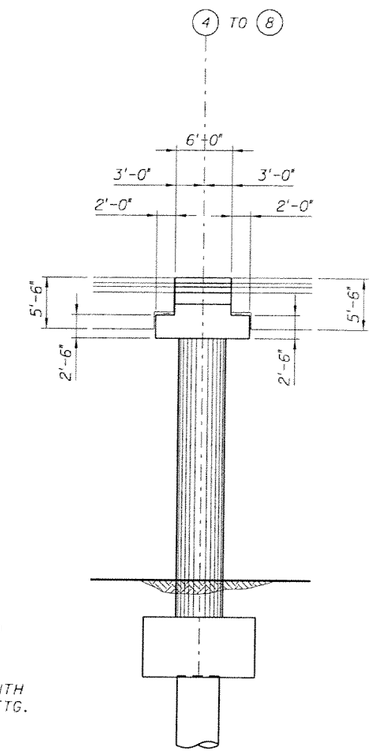

SECTION H-H

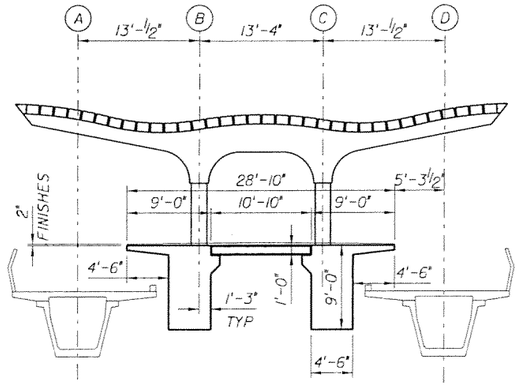

SECTION J-J

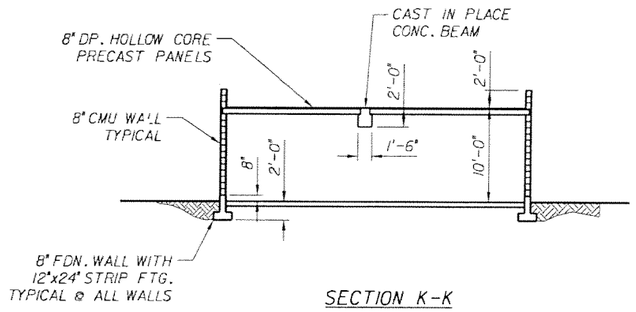

SECTION K-K

NOTE:
TO THE BEST OF OUR KNOWLEDGE THIS PLAN AND THE SPECIFICATIONS APPLYING TO IT COMPLY WITH APPLICABLE MINIMUM BUILDING CODE

SUBJECT TO CHANGE

CS/AKR Designed by	MAY 2006 Date					NORTH CORRIDOR METRORAIL EXTENSION - PRELIMINARY ENGINEERING (100% SUBMITTAL)
NH Drawn by	MAY 2006 Date					STRUCTURES - STATION
CS Checked by	MAY 2006 Date					ALI BABA AVENUE SECTION SHEET 2 of 3
Approved by	Date	No.	Date	By / Chk	App.	Revisions

MIAMI-DADE TRANSIT

PARSONS
7600 CORPORATE CENTER DRIVE, SUITE 500
MIAMI, FLORIDA 33126
PHONE: (786) 464-1000 FAX: (786) 845-7119
CERTIFICATE OF AUTHORIZATION NO. 1836
Approved | Date

EarthTech
A Tyco International Ltd Company
Reynaldo R. Rivas, P.E.
Florida License No. 41174
3750 NW 87th Avenue, Suite 300
Miami, FL 33178
Certificate of Authorization No. 8115
Approved | Date

Scale: 1/8" = 1'-0" | Drawing: SSP-S3-04 | Sheet: 116

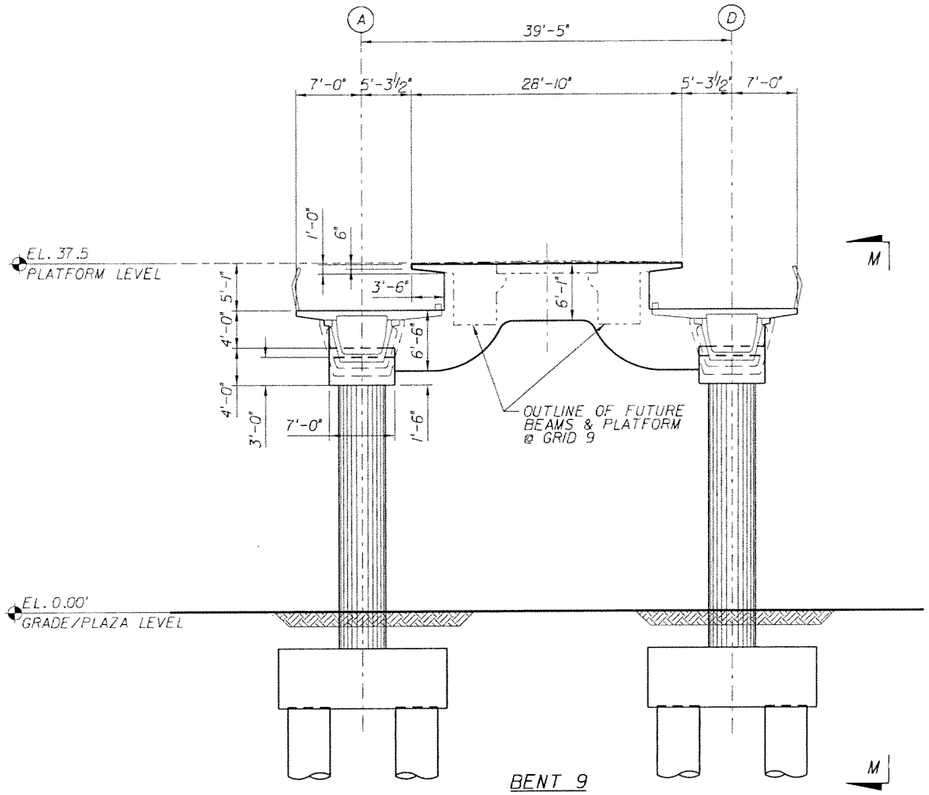

BENT 9

SECTION L-L

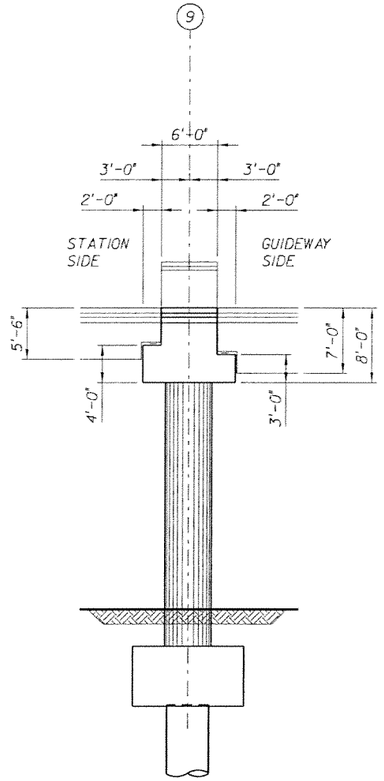

SECTION M-M

NOTE:
TO THE BEST OF OUR KNOWLEDGE THIS PLAN AND THE SPECIFICATIONS APPLYING TO IT COMPLY WITH APPLICABLE MINIMUM BUILDING CODE

SUBJECT TO CHANGE

CS/AKR Designed by	MAY 2006 Date					
NH Drawn by	MAY 2006 Date					
CS Checked by	MAY 2006 Date					
Approved by	Date	No.	Date	By / Chk	App.	Revisions

NORTH CORRIDOR METRORAIL EXTENSION - PRELIMINARY ENGINEERING (100% SUBMITTAL)

STRUCTURES - STATION

MIAMI-DADE TRANSIT

PARSONS
7600 CORPORATE CENTER DRIVE, SUITE 500
MIAMI, FLORIDA 33126
PHONE: (786) 464-1000 FAX: (786) 845-7119
CERTIFICATE OF AUTHORIZATION NO. 1838

Approved | Date

EarthTech
A Tyco International Ltd Company
Reynaldo R. Rivas, P.E.
Florida License No. 41174
3750 NW 87th Avenue, Suite 300
Miami, FL 33178
Certificate of Authorization No. 8115

Approved | Date

ALI BABA AVENUE
SECTION SHEET 3 of 3

Scale 1/8" = 1'-0" | Drawing SSP-S3-05 | Sheet 117

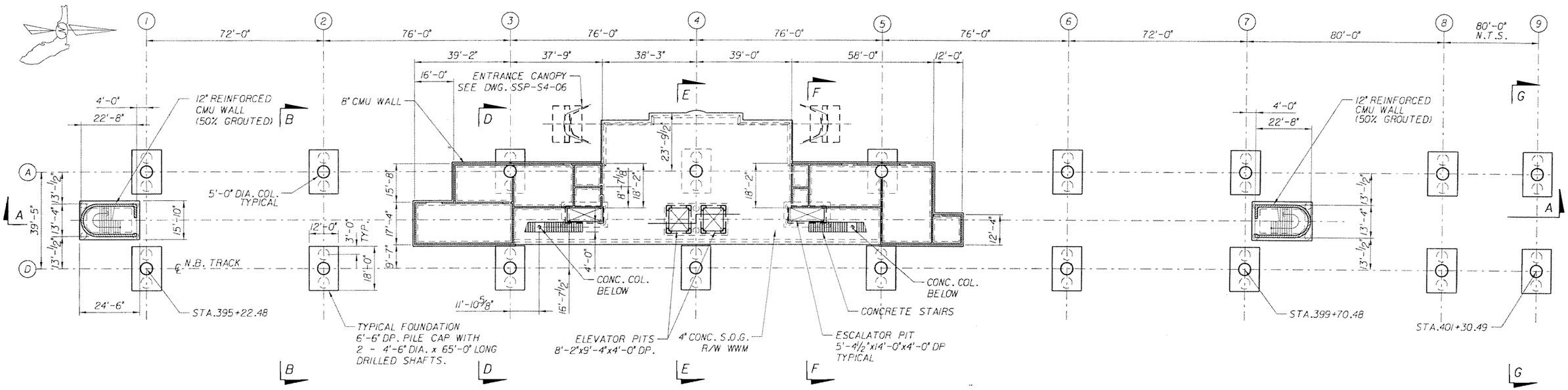

PLAZA PLAN

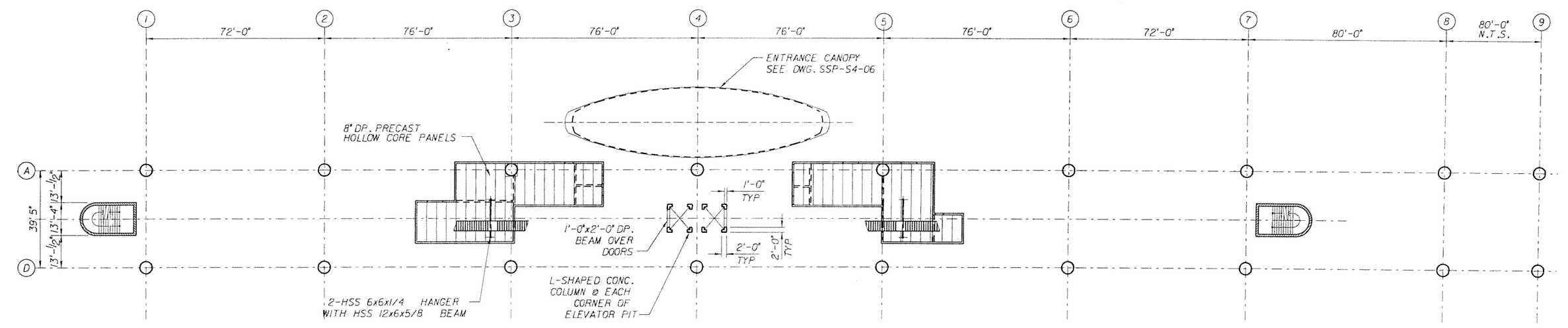

LOWER ROOF PLAN

NOTE:
TO THE BEST OF OUR KNOWLEDGE THIS PLAN AND THE SPECIFICATIONS APPLYING TO IT COMPLY WITH APPLICABLE MINIMUM BUILDING CODE

SUBJECT TO CHANGE

CS/AKR Designed by	MAY 2006 Date					
NH Drawn by	MAY 2006 Date					
CS Checked by	MAY 2006 Date					
Approved by	Date	No.	Date	By / Chk	App.	Revisions

NORTH CORRIDOR METRORAIL EXTENSION - PRELIMINARY ENGINEERING (100% SUBMITTAL)

MIAMI-DADE TRANSIT

PARSONS
7600 CORPORATE CENTER DRIVE, SUITE 500
MIAMI, FLORIDA 33126
PHONE: (786) 464-1000 FAX: (786) 845-7119
CERTIFICATE OF AUTHORIZATION NO. 1838

Approved | Date

EarthTech
A Tyco International Ltd Company
Reynaldo R. Rivas, P.E.
Florida License No. 41174
3750 NW 87th Avenue, Suite 300
Miami, FL 33178
Certificate of Authorization No. 8115

Approved | Date

STRUCTURES - STATION

NW 163rd STREET PLAZA LAYOUT AND LOWER ROOF PLANS

Scale 1"=20' | Drawing SSP-S4-01 | Sheet 118

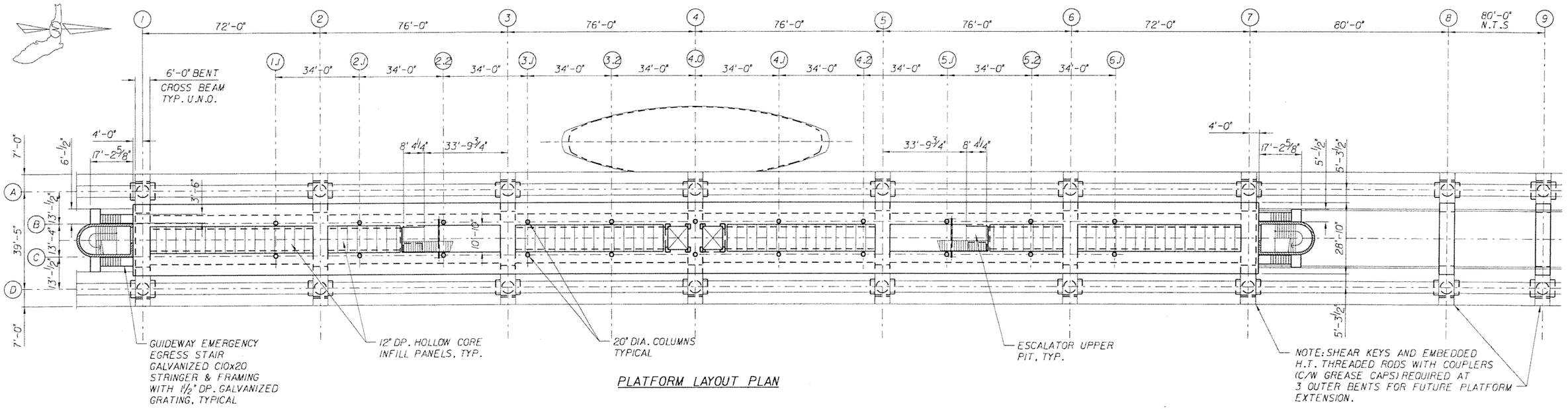

PLATFORM LAYOUT PLAN

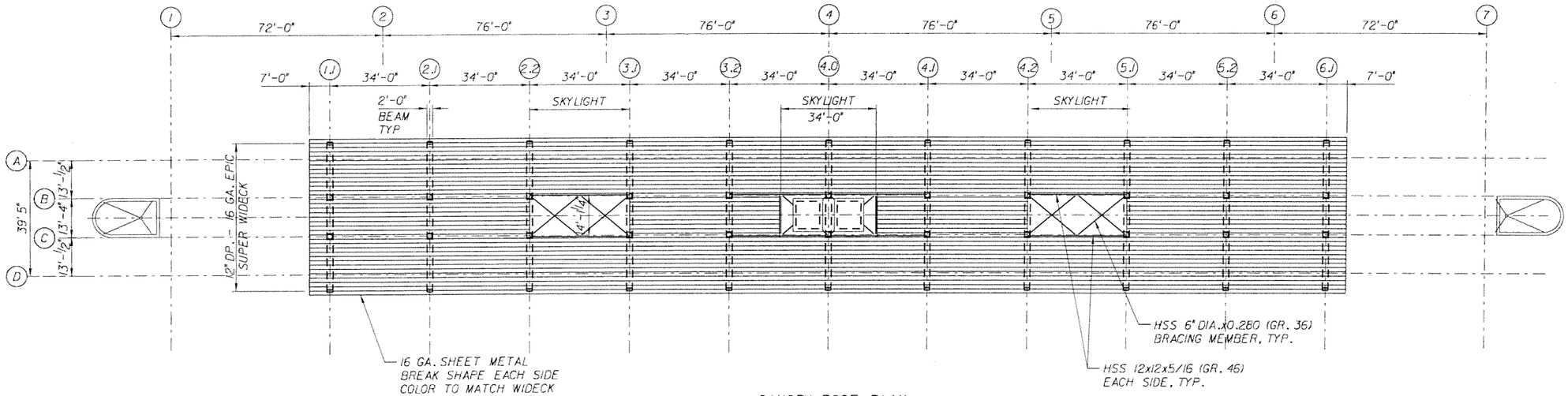

CANOPY ROOF PLAN

NOTE:
TO THE BEST OF OUR KNOWLEDGE THIS PLAN AND THE SPECIFICATIONS APPLYING TO IT COMPLY WITH APPLICABLE MINIMUM BUILDING CODE

SUBJECT TO CHANGE

CS/DY Designed by	MAY 2006 Date					
NH Drawn by	MAY 2006 Date					
CS Checked by	MAY 2006 Date					
Approved by	Date	No.	Date	By / Chk	App.	Revisions

NORTH CORRIDOR METRORAIL EXTENSION - PRELIMINARY ENGINEERING (100% SUBMITTAL)

MIAMI-DADE TRANSIT

PARSONS
7600 CORPORATE CENTER DRIVE, SUITE 500
MIAMI, FLORIDA 33126
PHONE: (786) 464-1000 FAX: (786) 845-7119
CERTIFICATE OF AUTHORIZATION NO. 1638
Approved | Date

EarthTech
A Tyco International Ltd. Company
Reynaldo R. Rivas, P.E.
Florida License No. 41174
3750 NW 87th Avenue, Suite 300
Miami, FL 33178
Certificate of Authorization No. 8115
Approved | Date

STRUCTURES - STATION

NW 163rd STREET PLATFORM LAYOUT AND CANOPY ROOF PLANS

Scale 1" = 20' | Drawing SSP-S4-02 | Sheet 113

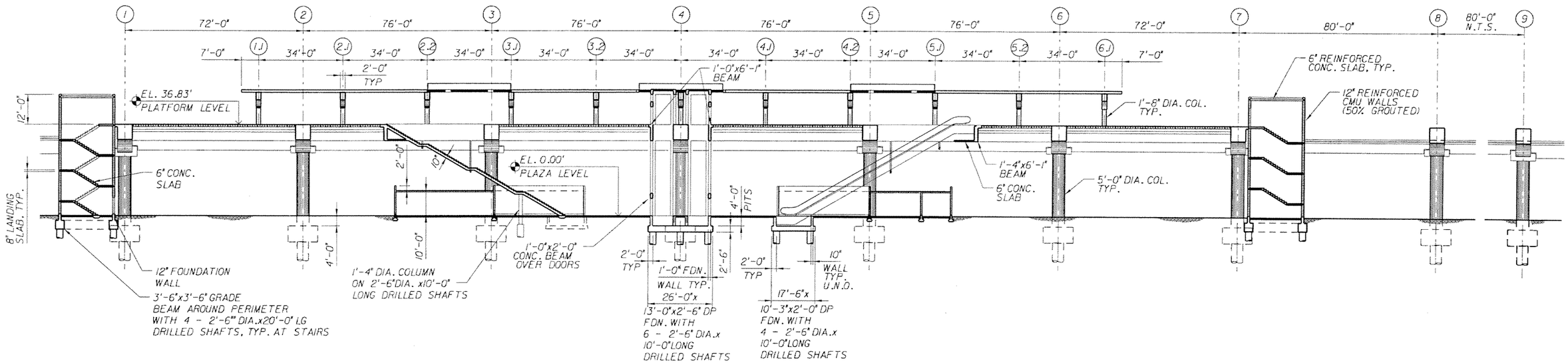

LONGITUDINAL SECTION A-A
SCALE: 1"=20'

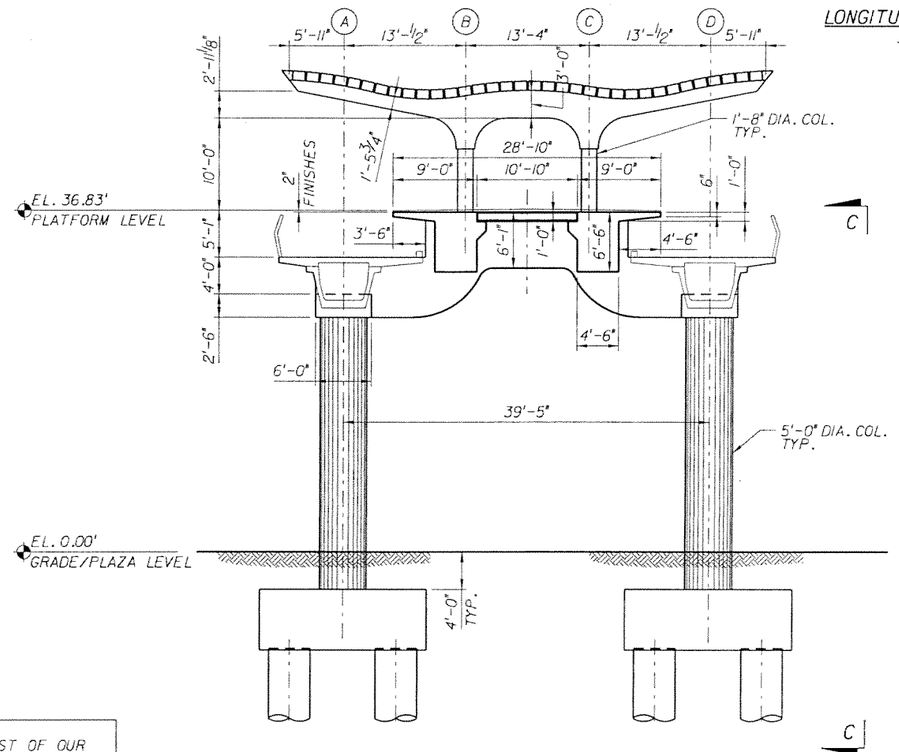

SECTION B-B (TYPICAL)
SCALE: 1/8"=1'-0"

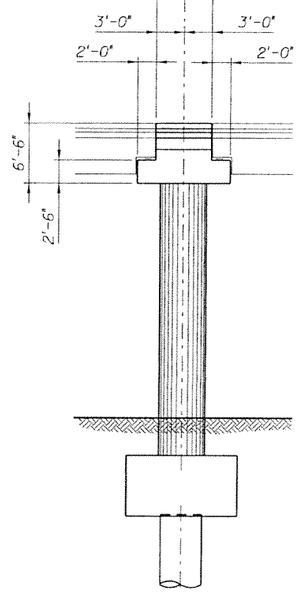

SECTION C-C
SCALE: 1/8"=1'-0"

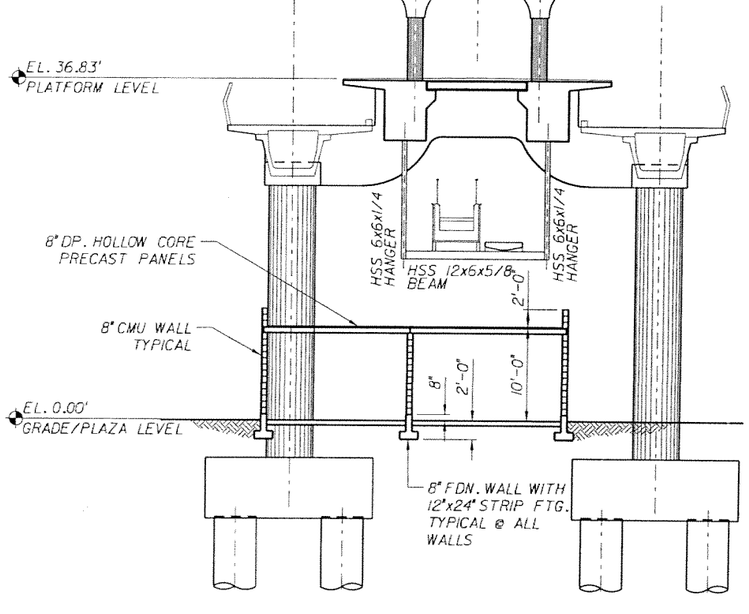

SECTION D-D
SCALE: 1/8"=1'-0"

NOTE:
TO THE BEST OF OUR KNOWLEDGE THIS PLAN AND THE SPECIFICATIONS APPLYING TO IT COMPLY WITH APPLICABLE MINIMUM BUILDING CODE

SUBJECT TO CHANGE

CS/AKR Designed by	MAY 2006 Date					
NH Drawn by	MAY 2006 Date					
CS Checked by	MAY 2006 Date					
Approved by	Date	No.	Date	By / Chk	App.	Revisions

NORTH CORRIDOR METRORAIL EXTENSION - PRELIMINARY ENGINEERING (100% SUBMITTAL)

MIAMI-DADE TRANSIT

PARSONS
7600 CORPORATE CENTER DRIVE, SUITE 500
MIAMI, FLORIDA 33126
PHONE: (786) 464-1000 FAX: (786) 845-7119
CERTIFICATE OF AUTHORIZATION NO. 1838
Approved Date

EarthTech
A Tyco International Ltd Company
Reynaldo R. Rivas, P.E.
Florida License No. 41174
3750 NW 87th Avenue, Suite 300
Miami, FL 33178
Certificate of Authorization No. 8115
Approved Date

STRUCTURES - STATION

NW 163rd STREET
SECTION SHEET 1 of 3

Scale AS NOTED | Drawing SSP-S4-03 | Sheet 120

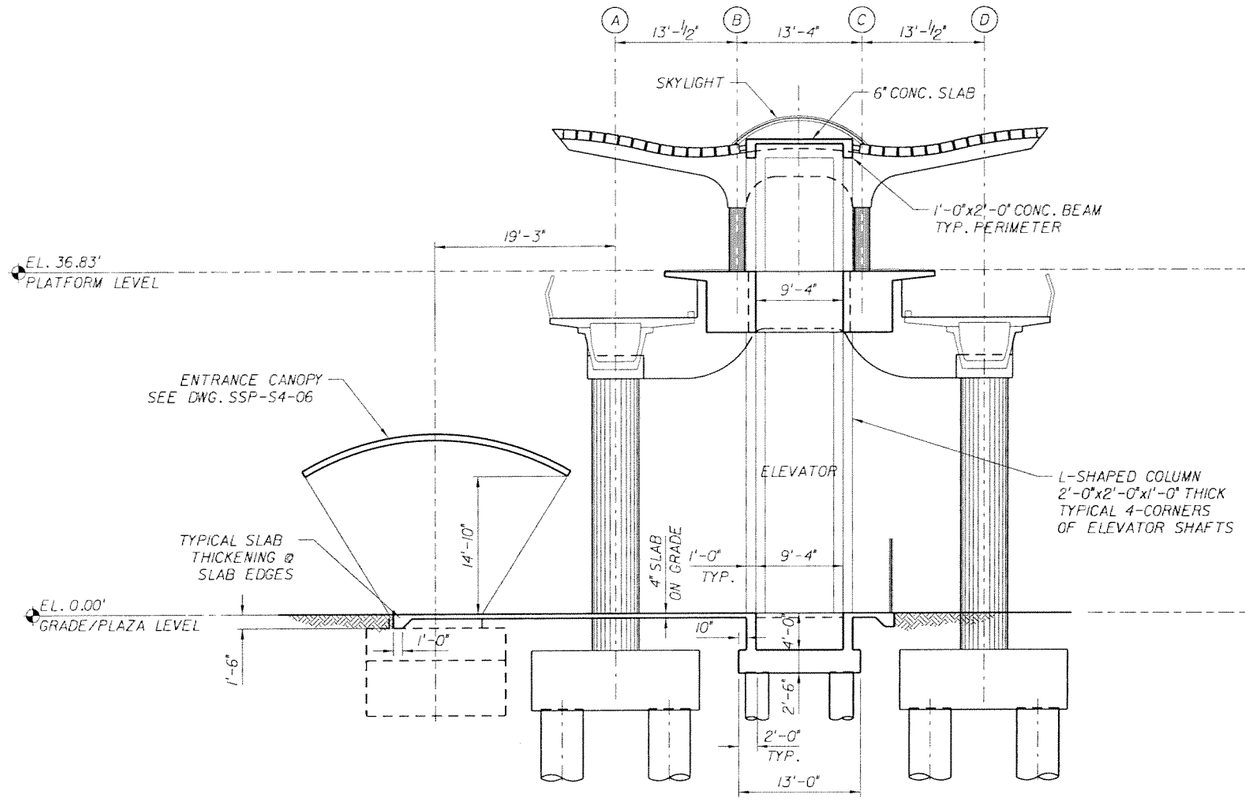

SECTION E-E

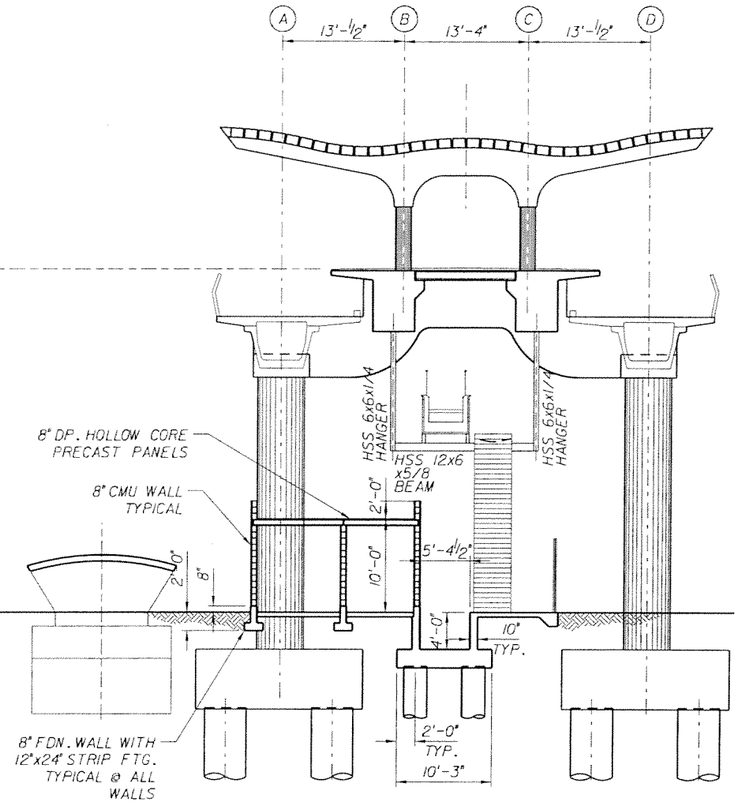

SECTION F-F

NOTE:
TO THE BEST OF OUR KNOWLEDGE THIS PLAN AND THE SPECIFICATIONS APPLYING TO IT COMPLY WITH APPLICABLE MINIMUM BUILDING CODE

SUBJECT TO CHANGE

CS/AKR Designed by	MAY 2006 Date					NORTH CORRIDOR METRORAIL EXTENSION - PRELIMINARY ENGINEERING (100% SUBMITTAL)
NH Drawn by	MAY 2006 Date					MIAMI-DADE TRANSIT
CS Checked by	MAY 2006 Date					PARSONS 7600 CORPORATE CENTER DRIVE, SUITE 500 MIAMI, FLORIDA 33126 PHONE: (786) 464-1000 FAX: (786) 845-7119 CERTIFICATE OF AUTHORIZATION NO. 1838
Approved by	Date	No.	Date	By / Chk	App.	Revisions
						Approved / Date

EarthTech
A Tyco International Ltd Company
Reynaldo R. Rivas, P.E.
Florida License No. 41174
3750 NW 87th Avenue, Suite 300
Miami, FL 33178
Certificate of Authorization No. 8115

Approved / Date

STRUCTURES - STATION

NW 163rd STREET
SECTION SHEET 2 of 3

Scale 1/8" = 1'-0" | Drawing SSP-S4-04 | Sheet 12

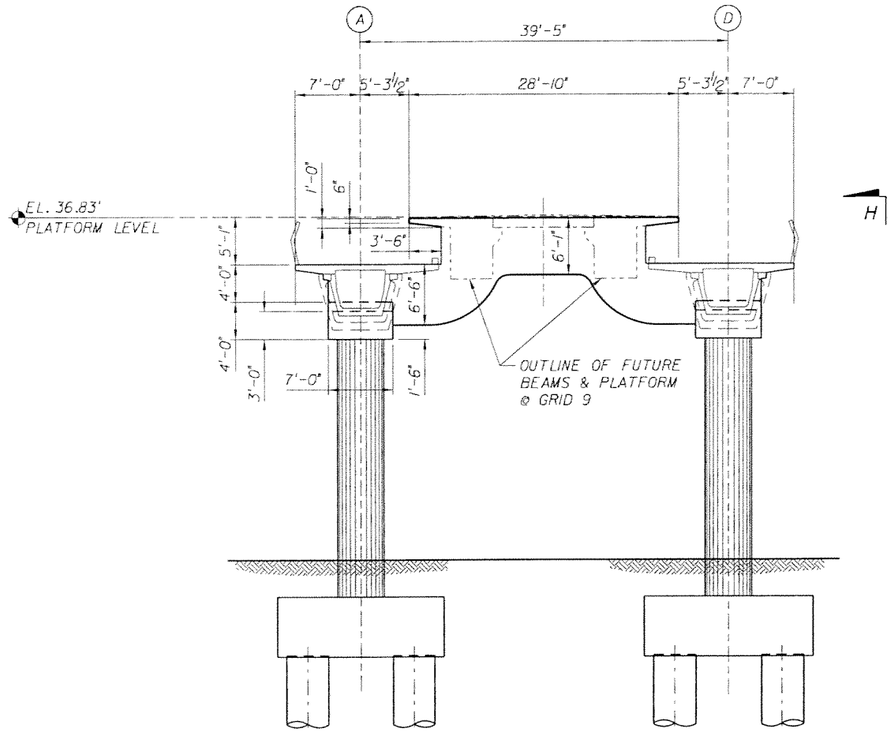

NOTE: BENT AS SHOWN FOR GRID 9, BENT AT GRID 1 SIMILAR, EXCEPT PLATFORM BEAMS AND HOLLOW CORE ARE IN PLACE.

SECTION G-G

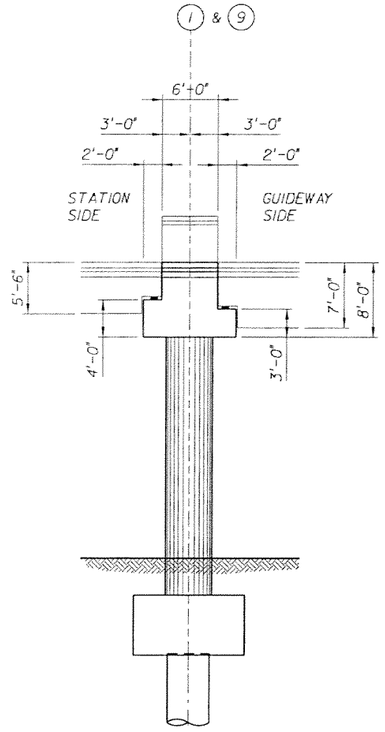

SECTION H-H

NOTE:
TO THE BEST OF OUR KNOWLEDGE THIS PLAN AND THE SPECIFICATIONS APPLYING TO IT COMPLY WITH APPLICABLE MINIMUM BUILDING CODE

SUBJECT TO CHANGE

CS/AKR Designed by	MAY 2006 Date						NORTH CORRIDOR METRORAIL EXTENSION - PRELIMINARY ENGINEERING (100% SUBMITTAL)
NH Drawn by	MAY 2006 Date						MIAMI-DADE TRANSIT
CS Checked by	MAY 2006 Date						PARSONS 7600 CORPORATE CENTER DRIVE, SUITE 500 MIAMI, FLORIDA 33126 PHONE: (786) 454-1000 FAX: (786) 845-7119 CERTIFICATE OF AUTHORIZATION NO. 1638
Approved by	Date	No.	Date	By / Chk	App.	Revisions	Approved / Date

EarthTech
A Tyco International Ltd Company
Reynaldo R. Rivas, P.E.
Florida License No. 41174
3750 NW 87th Avenue, Suite 300
Miami, FL 33178
Certificate of Authorization No. 8115

Approved / Date

STRUCTURES - STATION

NW 163rd STREET
SECTION SHEET 3 of 3

Scale 1/8" = 1'-0" | Drawing SSP-S4-05 | Sheet 122

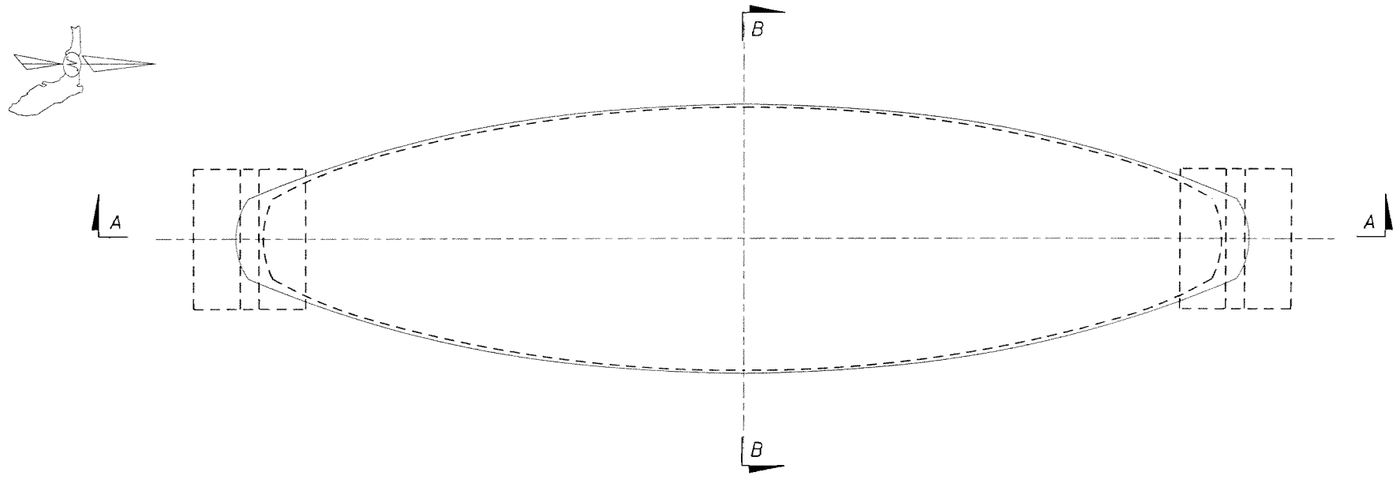

ENTRANCE CANOPY PLAN

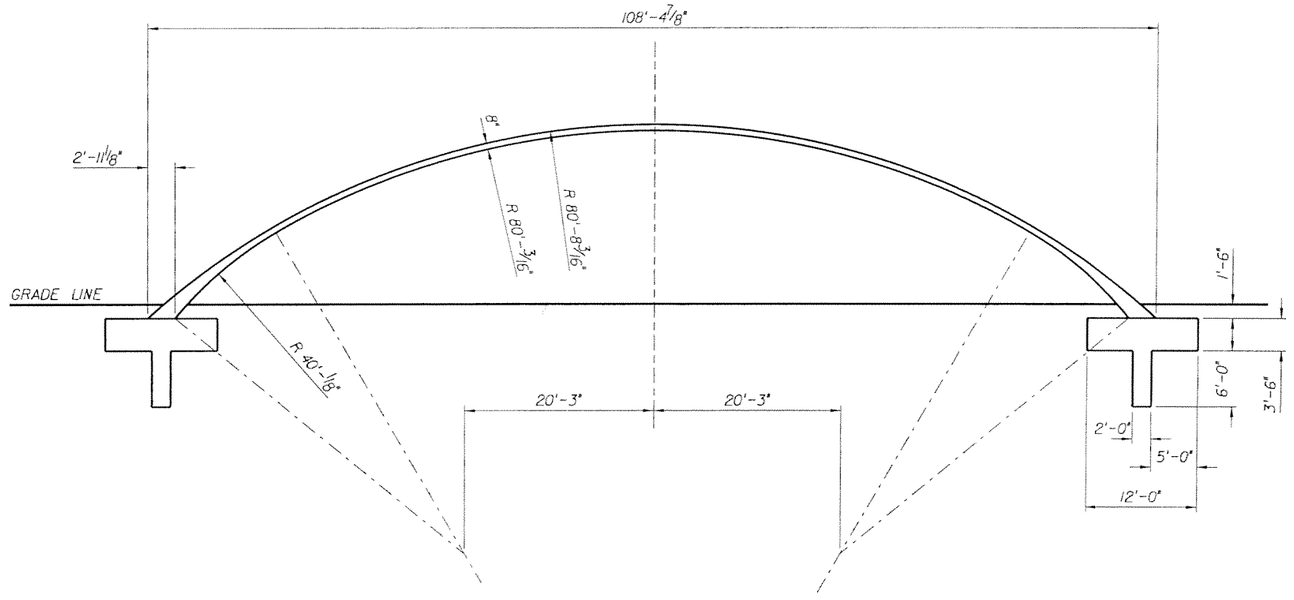

SECTION A-A

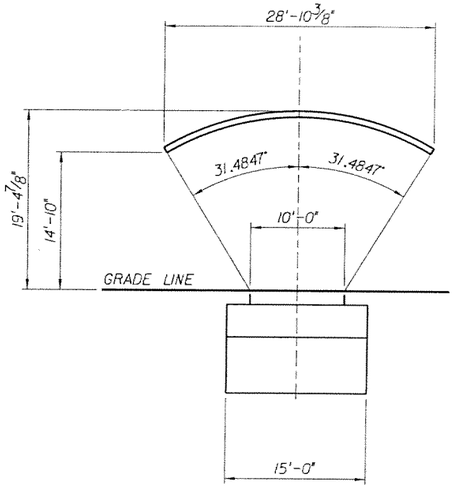

SECTION B-B

NOTE:
TO THE BEST OF OUR KNOWLEDGE THIS PLAN AND THE SPECIFICATIONS APPLYING TO IT COMPLY WITH APPLICABLE MINIMUM BUILDING CODE

SUBJECT TO CHANGE

CS/AKR Designed by	MAY 2006 Date					
NH Drawn by	MAY 2006 Date					
CS Checked by	MAY 2006 Date					
Approved by	Date	No.	Date	By / Chk	App.	Revisions

NORTH CORRIDOR METRORAIL EXTENSION - PRELIMINARY ENGINEERING (100% SUBMITTAL)

MIAMI-DADE TRANSIT

PARSONS
7600 CORPORATE CENTER DRIVE, SUITE 500
MIAMI, FLORIDA 33126
PHONE: (786) 464-1000 FAX: (786) 845-7119
CERTIFICATE OF AUTHORIZATION NO. 1838

Approved | Date

EarthTech
A Tyco International Ltd Company
Reynaldo R. Rivas, P.E.
Florida License No. 41174
3750 NW 87th Avenue, Suite 300
Miami, FL 33178
Certificate of Authorization No. 8115

Approved | Date

STRUCTURES - STATION

NW 163rd STREET ENTRANCE ROOF SHELL STRUCTURE DETAILS

Scale 1/8"=1'-0" | Drawing SSP-S4-06 | Sheet 123

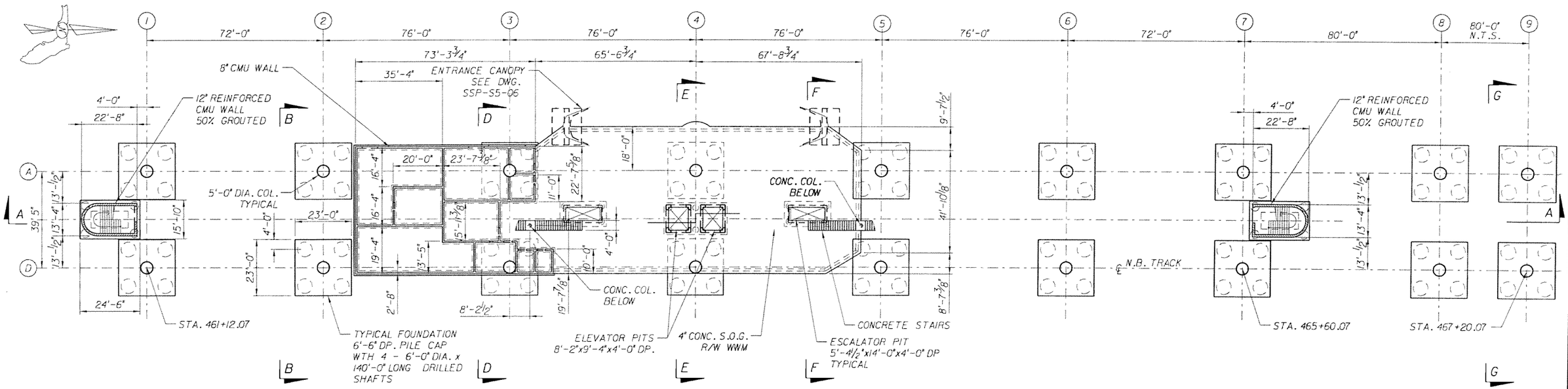

PLAZA PLAN

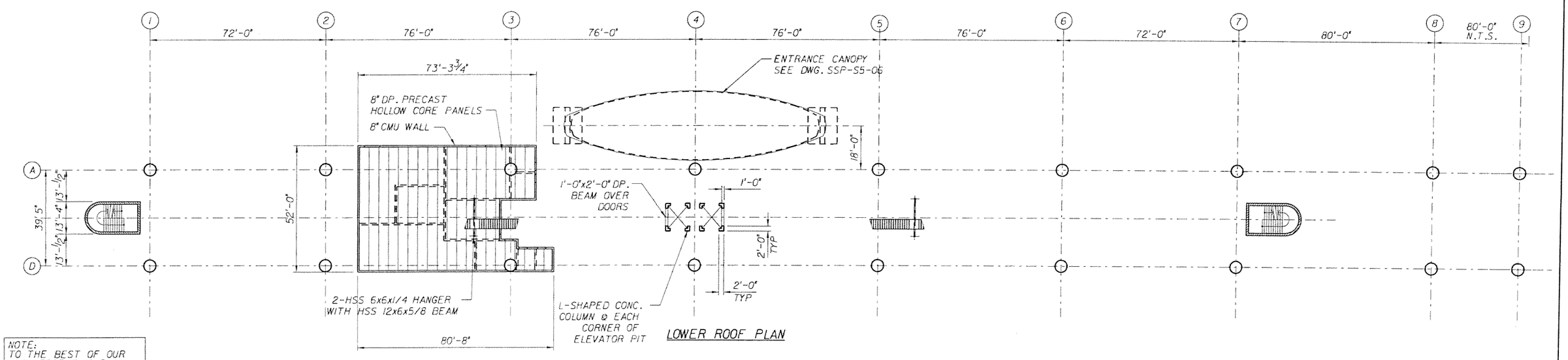

LOWER ROOF PLAN

NOTE:
TO THE BEST OF OUR KNOWLEDGE THIS PLAN AND THE SPECIFICATIONS APPLYING TO IT COMPLY WITH APPLICABLE MINIMUM BUILDING CODE

SUBJECT TO CHANGE

CS/AKR Designed by	MAY 2006 Date					
NH Drawn by	MAY 2006 Date					
CS Checked by	MAY 2006 Date					
Approved by	Date	No.	Date	By / Chk	App.	Revisions

NORTH CORRIDOR METRORAIL EXTENSION - PRELIMINARY ENGINEERING (100% SUBMITTAL)

MIAMI-DADE TRANSIT

PARSONS
7600 CORPORATE CENTER DRIVE, SUITE 500
MIAMI, FLORIDA 33126
PHONE: (786) 464-1000 FAX: (786) 645-7119
CERTIFICATE OF AUTHORIZATION NO. 1638

EarthTech
A Tyco International Ltd Company
Reynaldo R. Rivas, P.E.
Florida License No. 41174
3750 NW 87th Avenue, Suite 300
Miami, FL 33178
Certificate of Authorization No. 8115

Approved	Date	Approved	Date

STRUCTURES - STATION

NW 183rd STREET PLAZA LAYOUT AND LOWER ROOF PLANS

Scale	Drawing	Sheet
1"=20'	SSP-S5-01	12

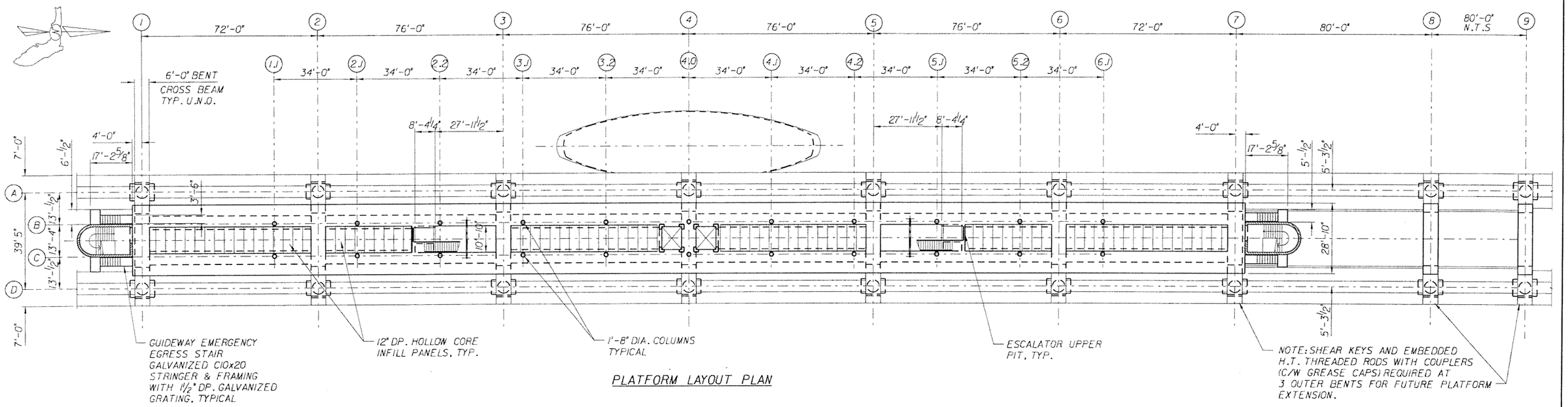

PLATFORM LAYOUT PLAN

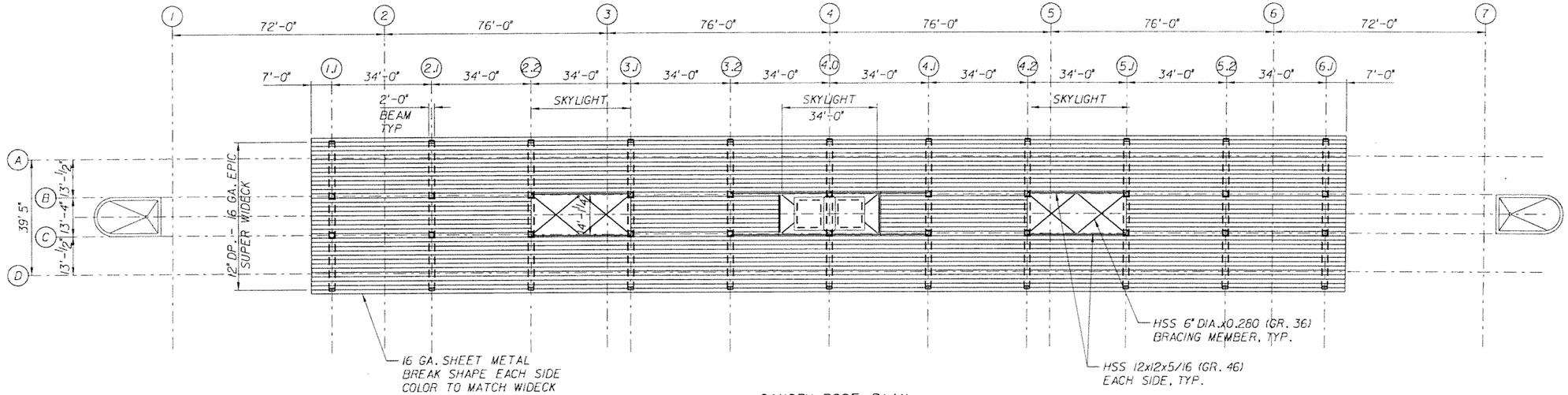

CANOPY ROOF PLAN

NOTE:
TO THE BEST OF OUR KNOWLEDGE THIS PLAN AND THE SPECIFICATIONS APPLYING TO IT COMPLY WITH APPLICABLE MINIMUM BUILDING CODE

SUBJECT TO CHANGE

CS/AKR Designed by	MAY 2006 Date					
NH Drawn by	MAY 2006 Date					
CS Checked by	MAY 2006 Date					
Approved by	Date	No.	Date	By / Chk	App.	Revisions

NORTH CORRIDOR METRORAIL EXTENSION - PRELIMINARY ENGINEERING (100% SUBMITTAL)

MIAMI-DADE TRANSIT

PARSONS
7600 CORPORATE CENTER DRIVE, SUITE 500
MIAMI, FLORIDA 33126
PHONE: (786) 464-1000 FAX: (786) 845-7119
CERTIFICATE OF AUTHORIZATION NO. 1838
Approved Date

EarthTech
A Tyco International Ltd Company
Reynaldo A. Rivas, P.E.
Florida License No. 41174
3750 NW 87th Avenue, Suite 300
Miami, FL 33178
Certificate of Authorization No. 8115
Approved Date

STRUCTURES - STATION

NW 183rd STREET PLATFORM LAYOUT AND CANOPY ROOF PLANS

Scale 1"=20' | Drawing SSP-S5-02 | Sheet 125

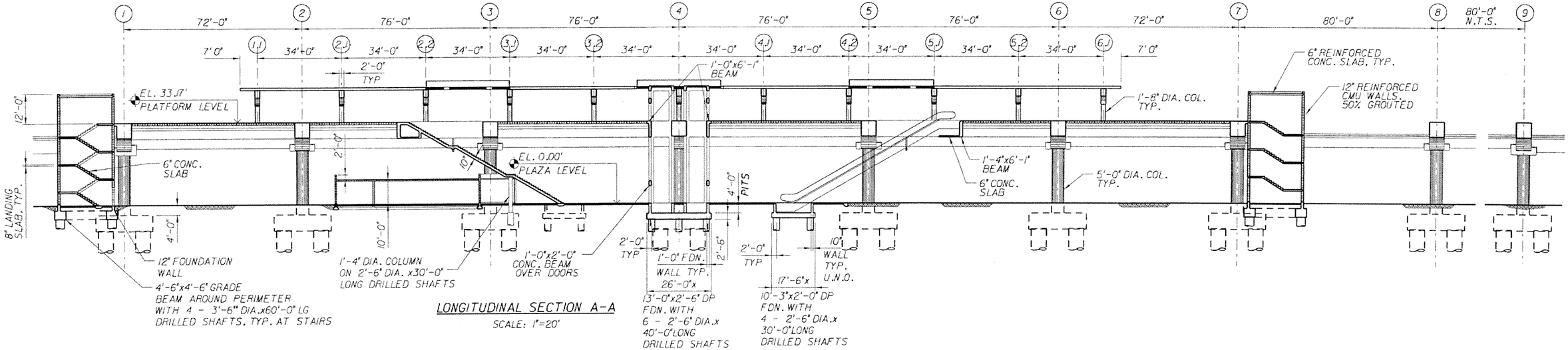

LONGITUDINAL SECTION A-A

SCALE: 1"=20'

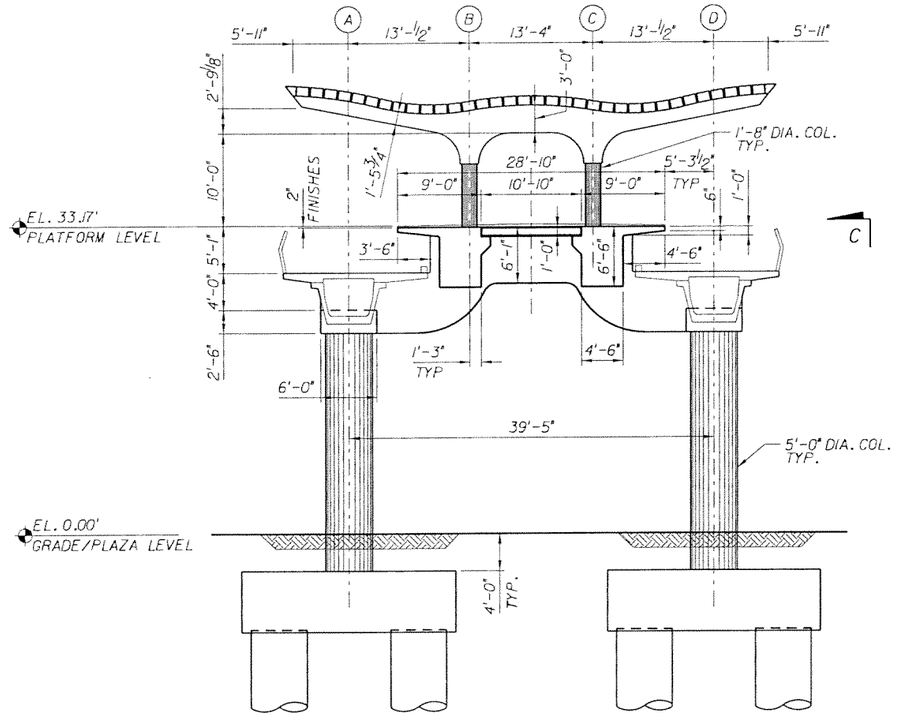

SECTION B-B (TYPICAL)

SCALE: 1/8"=1'-0"

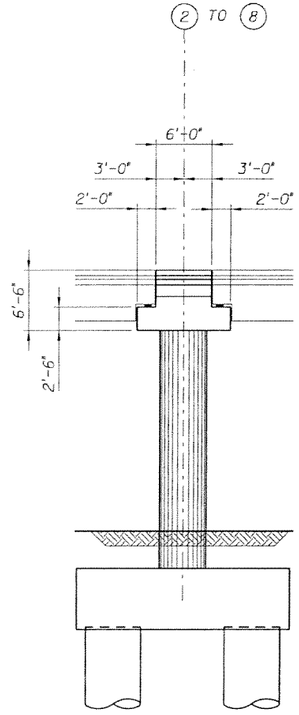

SECTION C-C

SCALE: 1/8"=1'-0"

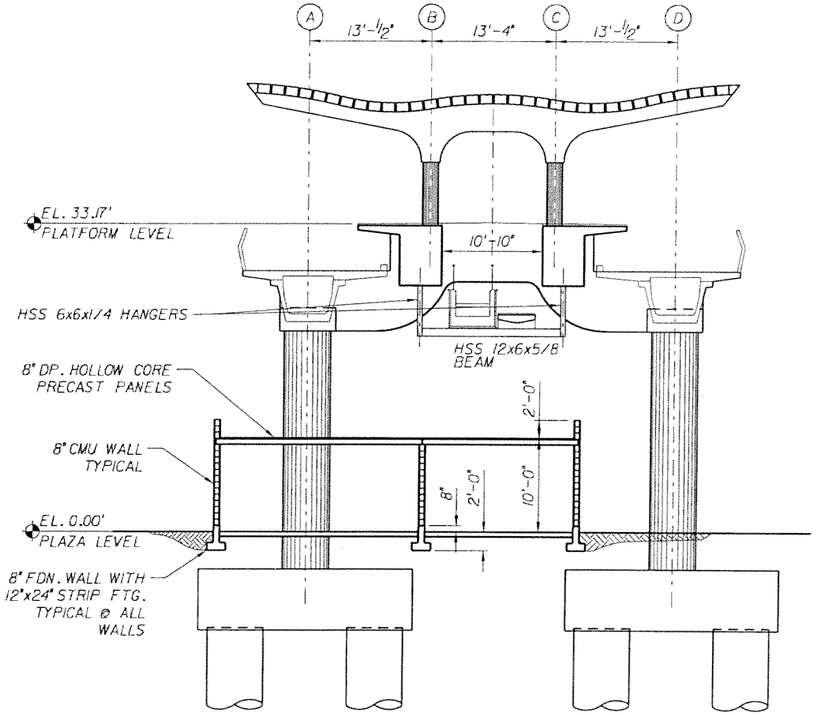

SECTION D-D

SCALE: 1/8"=1'-0"

NOTE:
TO THE BEST OF OUR KNOWLEDGE THIS PLAN AND THE SPECIFICATIONS APPLYING TO IT COMPLY WITH APPLICABLE MINIMUM BUILDING CODE

SUBJECT TO CHANGE

CS/AKR Designed by	MAY 2006 Date						
NH Drawn by	MAY 2006 Date						
CS Checked by	MAY 2006 Date						
Approved by	Date	No.	Date	By / Chk	App.	Revisions	

NORTH CORRIDOR METRORAIL EXTENSION - PRELIMINARY ENGINEERING (100% SUBMITTAL)

MIAMI-DADE TRANSIT

PARSONS
7600 CORPORATE CENTER DRIVE, SUITE 500
MIAMI, FLORIDA 33126
PHONE: (786) 464-1000 FAX: (786) 845-7119
CERTIFICATE OF AUTHORIZATION NO. 1836

EarthTech
A Tyco International Ltd Company
Reynaldo R. Rivas, P.E.
Florida License No. 41174
3750 NW 87th Avenue, Suite 300
Miami, FL 33178
Certificate of Authorization No. 8115

Approved | Date | Approved | Date

STRUCTURES - STATION

NW 183rd STREET
SECTION SHEET 1 of 3

Scale: AS NOTED | Drawing: SSP-S5-03 | Sheet: 126

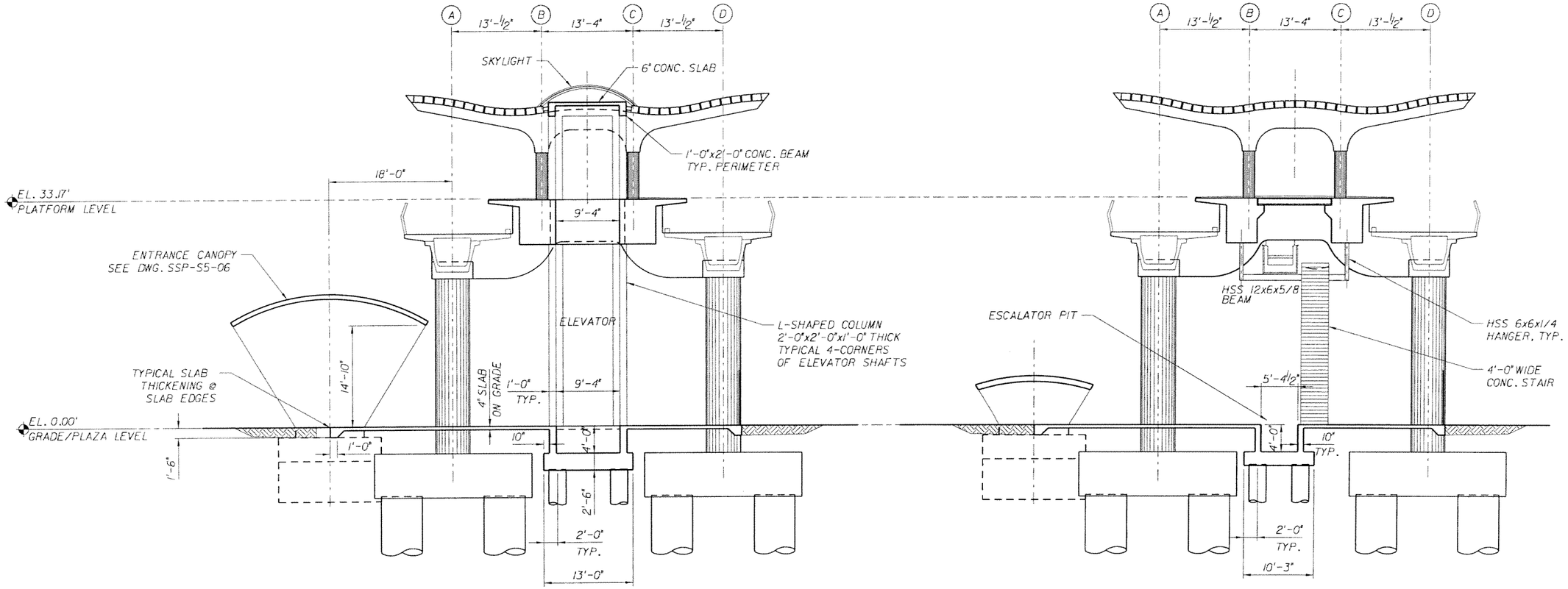

SECTION E-E

SECTION F-F

NOTE:
TO THE BEST OF OUR KNOWLEDGE THIS PLAN AND THE SPECIFICATIONS APPLYING TO IT COMPLY WITH APPLICABLE MINIMUM BUILDING CODE

SUBJECT TO CHANGE

CS/AKR Designed by	MAY 2006 Date					
NH Drawn by	MAY 2006 Date					
CS Checked by	MAY 2006 Date					
Approved by	Date	No.	Date	By / Chk	App.	Revisions

NORTH CORRIDOR METRORAIL EXTENSION - PRELIMINARY ENGINEERING (100% SUBMITTAL)

STRUCTURES - STATION

MIAMI-DADE TRANSIT

PARSONS
7600 CORPORATE CENTER DRIVE, SUITE 500
MIAMI, FLORIDA 33126
PHONE: (786) 464-1000 FAX: (786) 845-7119
CERTIFICATE OF AUTHORIZATION NO. 1838

EarthTech
A Tyco International Ltd Company
Reynaldo R. Rivas, P.E.
Florida License No. 41174
3750 NW 87th Avenue, Suite 300
Miami, FL 33178
Certificate of Authorization No. 8115

Approved	Date	Approved	Date

NW 183rd STREET
SECTION SHEET 2 of 3

Scale	Drawing	Sheet
1/8" = 1'-0"	SSP-S5-04	17

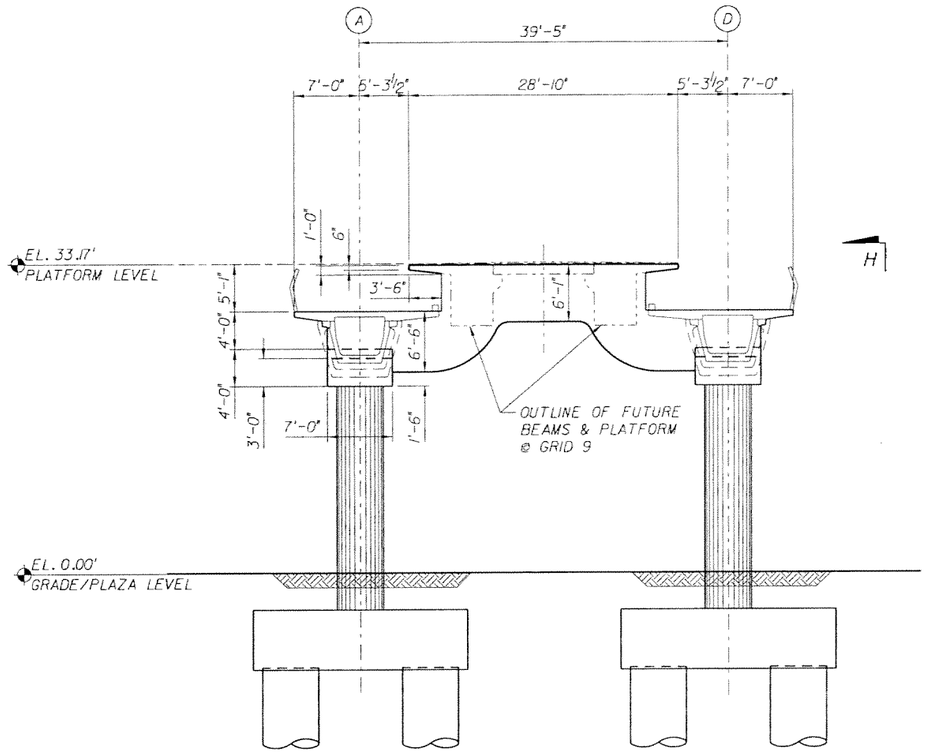

NOTE: BENT AS SHOWN FOR 9. BENT AT GRID 1 SIMILAR, EXCEPT PLATFORM BEAMS AND HOLLOW CORE ARE IN PLACE.

SECTION G-G

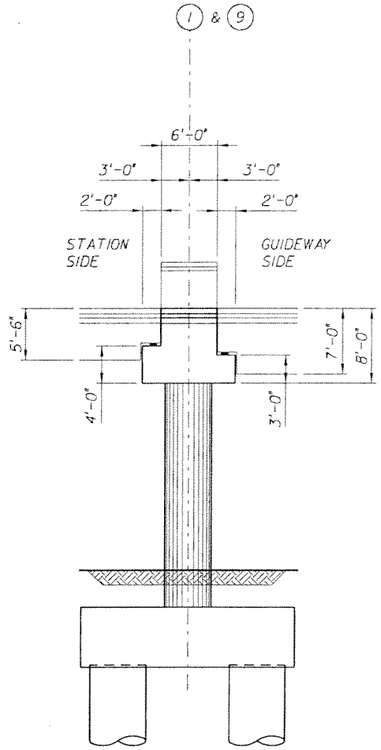

SECTION H-H

NOTE:
TO THE BEST OF OUR KNOWLEDGE THIS PLAN AND THE SPECIFICATIONS APPLYING TO IT COMPLY WITH APPLICABLE MINIMUM BUILDING CODE

SUBJECT TO CHANGE

CS/AKR Designed by	MAY 2006 Date					
NH Drawn by	MAY 2006 Date					
CS Checked by	MAY 2006 Date					
Approved by	Date	No.	Date	By / Chk	App.	Revisions

NORTH CORRIDOR METRORAIL EXTENSION - PRELIMINARY ENGINEERING (100% SUBMITTAL)

MIAMI-DADE TRANSIT

PARSONS
7600 CORPORATE CENTER DRIVE, SUITE 500
MIAMI, FLORIDA 33126
PHONE: (786) 464-1000 FAX: (786) 845-7119
CERTIFICATE OF AUTHORIZATION NO. 1838
Approved | Date

EarthTech
A Tyco International Ltd Company
Reynaldo R. Rivas, P.E.
Florida License No. 41174
3750 NW 87th Avenue, Suite 300
Miami, FL 33178
Certificate of Authorization No. 8115
Approved | Date

STRUCTURES - STATION

NW 183rd STREET
SECTION SHEET 3 of 3

Scale 1/8" = 1'-0" | Drawing SSP-S5-05 | Sheet 128

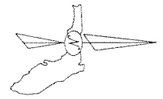

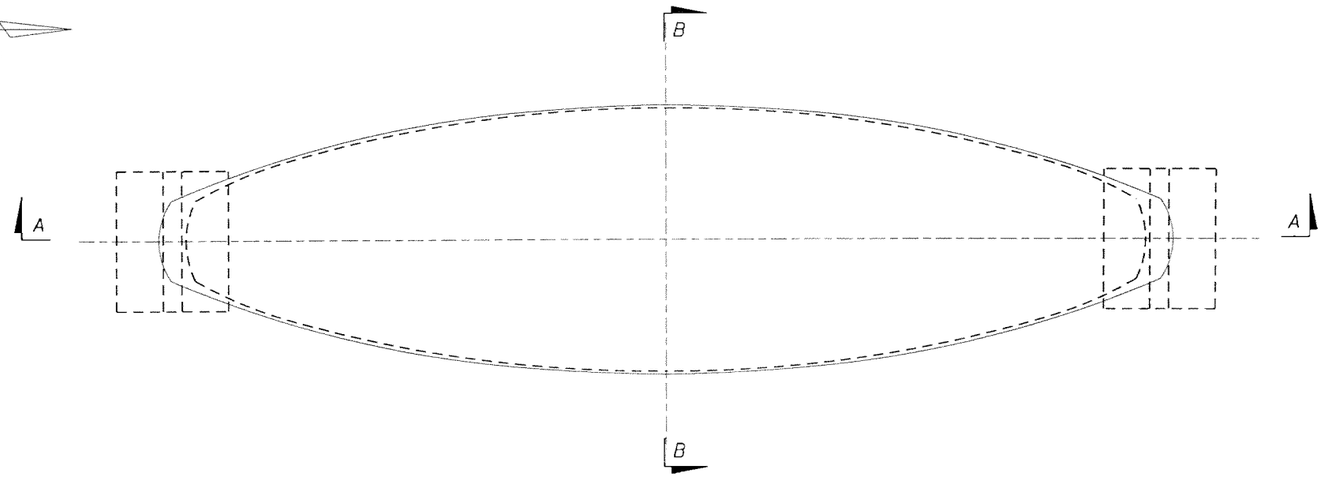

ENTRANCE CANOPY PLAN

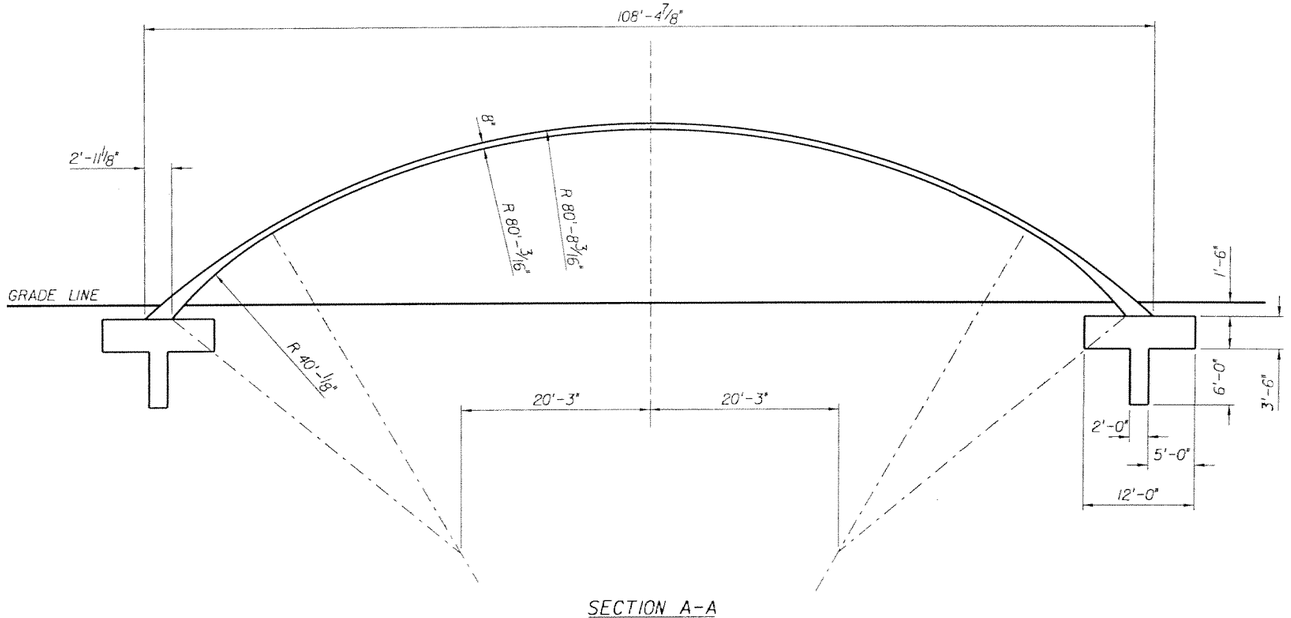

SECTION A-A

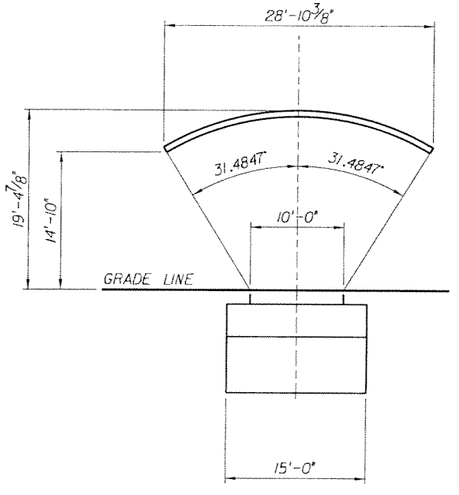

SECTION B-B

NOTE:
TO THE BEST OF OUR KNOWLEDGE THIS PLAN AND THE SPECIFICATIONS APPLYING TO IT COMPLY WITH APPLICABLE MINIMUM BUILDING CODE

SUBJECT TO CHANGE

CS/AKR	MAY 2006						
Designed by	Date						
NH	MAY 2006						
Drawn by	Date						
CS	MAY 2006						
Checked by	Date						
Approved by	Date	No.	Date	By / Chk	App.	Revisions	

NORTH CORRIDOR METRORAIL EXTENSION - PRELIMINARY ENGINEERING (100% SUBMITTAL)

MIAMI-DADE TRANSIT

PARSONS
7600 CORPORATE CENTER DRIVE, SUITE 500
MIAMI, FLORIDA 33126
PHONE: (786) 464-1000 FAX: (786) 845-7119
CERTIFICATE OF AUTHORIZATION NO. 1838

Approved | Date

EarthTech
A Tyco International Ltd Company
Reynaldo R. Rivas, P.E.
Florida License No. 41174
3750 NW 87th Avenue, Suite 300
Miami, FL 33178
Certificate of Authorization No. 8115

Approved | Date

STRUCTURES - STATION

NW 183rd STREET ENTRANCE ROOF SHELL STRUCTURE DETAILS

Scale 1/8"=1'-0" | Drawing SSP-S5-06 | Sheet 29

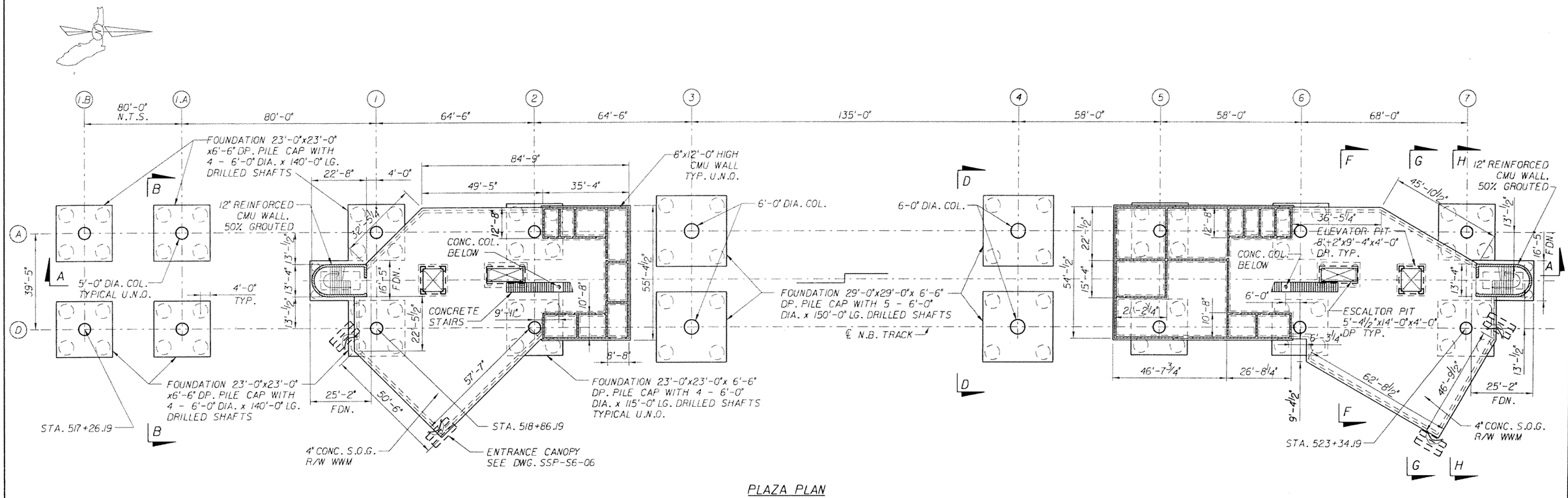

PLAZA PLAN

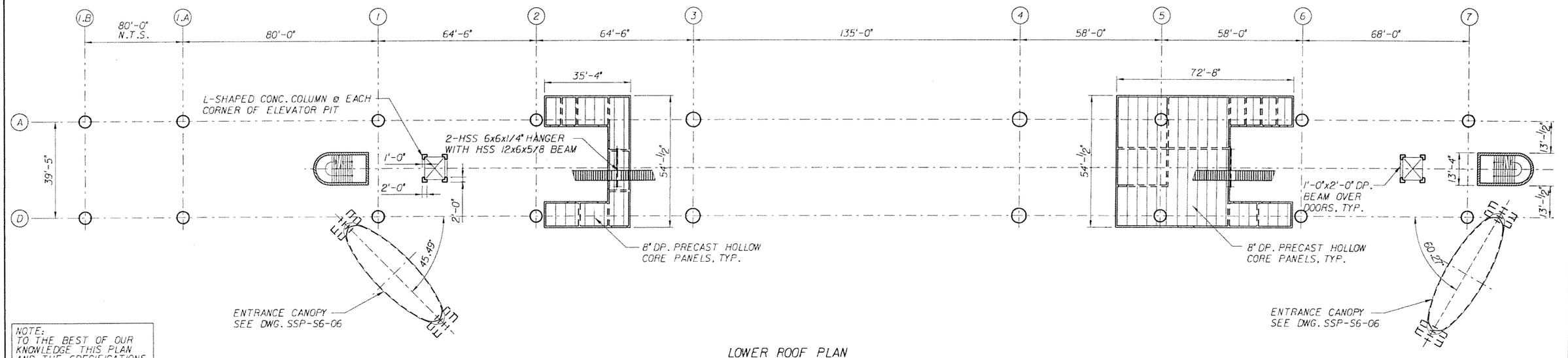

LOWER ROOF PLAN

NOTE:
TO THE BEST OF OUR KNOWLEDGE THIS PLAN AND THE SPECIFICATIONS APPLYING TO IT COMPLY WITH APPLICABLE MINIMUM BUILDING CODE

SUBJECT TO CHANGE

CS/AKR Designed by	MAY 2006 Date					
AC Drawn by	MAY 2006 Date					
CS Checked by	MAY 2006 Date					
Approved by	Date	No.	Date	By / Chk	App.	Revisions

NORTH CORRIDOR METRORAIL EXTENSION - PRELIMINARY ENGINEERING (100% SUBMITTAL)

MIAMI-DADE TRANSIT

PARSONS
7500 CORPORATE CENTER DRIVE, SUITE 500
MIAMI, FLORIDA 33126
PHONE: (786) 464-1000 FAX: (786) 845-7119
CERTIFICATE OF AUTHORIZATION NO. 1838

Approved | Date

EarthTech
A Tyco International Ltd Company
Reynaldo R. Rivas, P.E.
Florida License No. 41174
3750 NW 87th Avenue, Suite 300
Miami, FL 33178
Certificate of Authorization No. 8115

Approved | Date

STRUCTURES - STATION

NW 199th STREET PLAZA LAYOUT AND LOWER ROOF PLANS

Scale 1"=20' | Drawing SSP-S6-01 | Sheet 130

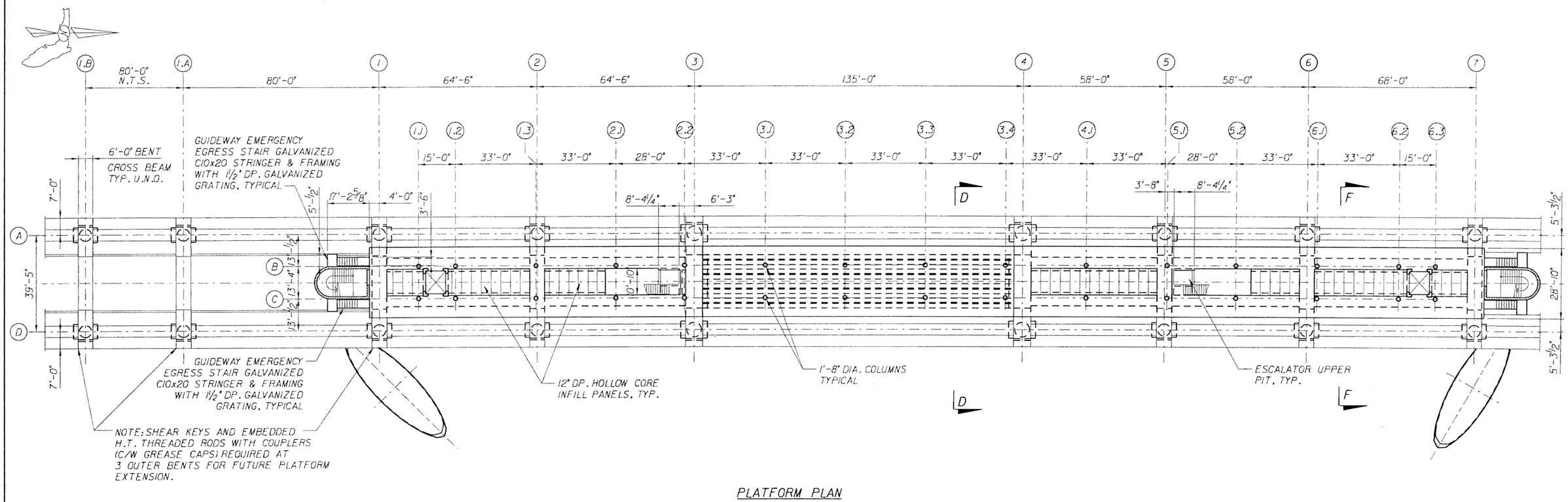

PLATFORM PLAN

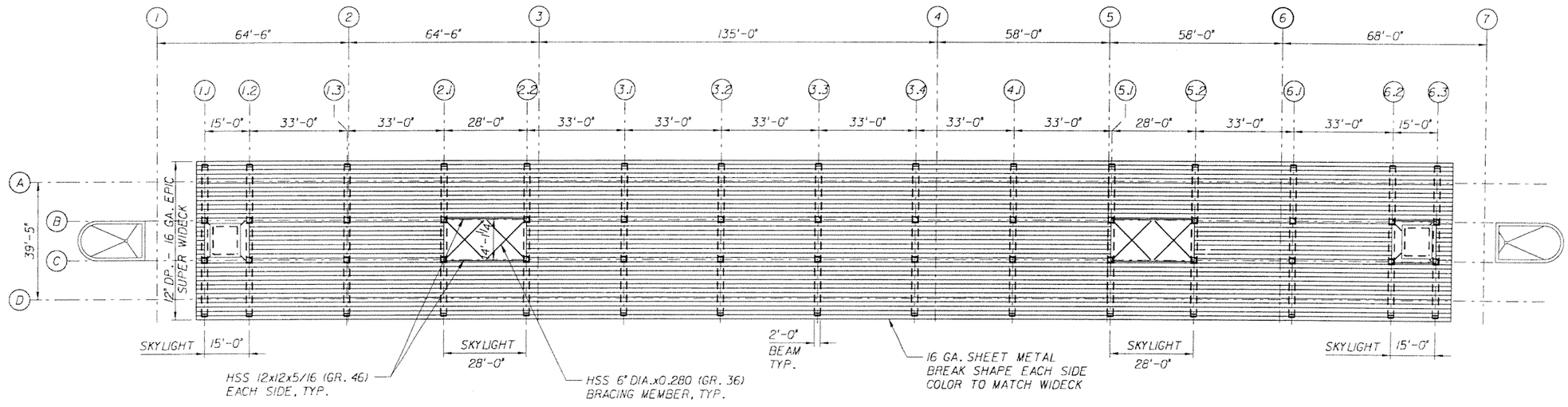

CANOPY ROOF PLAN

NOTE:
TO THE BEST OF OUR KNOWLEDGE THIS PLAN AND THE SPECIFICATIONS APPLYING TO IT COMPLY WITH APPLICABLE MINIMUM BUILDING CODE

SUBJECT TO CHANGE

CS/DY	MAY 2006						
Designed by	Date						
AC	MAY 2006						
Drawn by	Date						
CS	MAY 2006						
Checked by	Date						
Approved by	Date	No.	Date	By / Chk	App.	Revisions	

NORTH CORRIDOR METRORAIL EXTENSION - PRELIMINARY ENGINEERING (100% SUBMITTAL)

MIAMI-DADE TRANSIT

PARSONS
7600 CORPORATE CENTER DRIVE, SUITE 500
MIAMI, FLORIDA 33126
PHONE: (786) 464-1000 FAX: (786) 845-7119
CERTIFICATE OF AUTHORIZATION NO. 1838
Approved | Date

EarthTech
A Tyco International Ltd Company
Reynaldo R. Rivas, P.E.
Florida License No. 41174
3750 NW 87th Avenue, Suite 300
Miami, FL 33178
Certificate of Authorization No. 8115
Approved | Date

STRUCTURES - STATION

NW 199th STREET
PLATFORM LAYOUT AND
CANOPY ROOF PLANS

Scale 1"=20' | Drawing SSP-S6-02 | Sheet 13

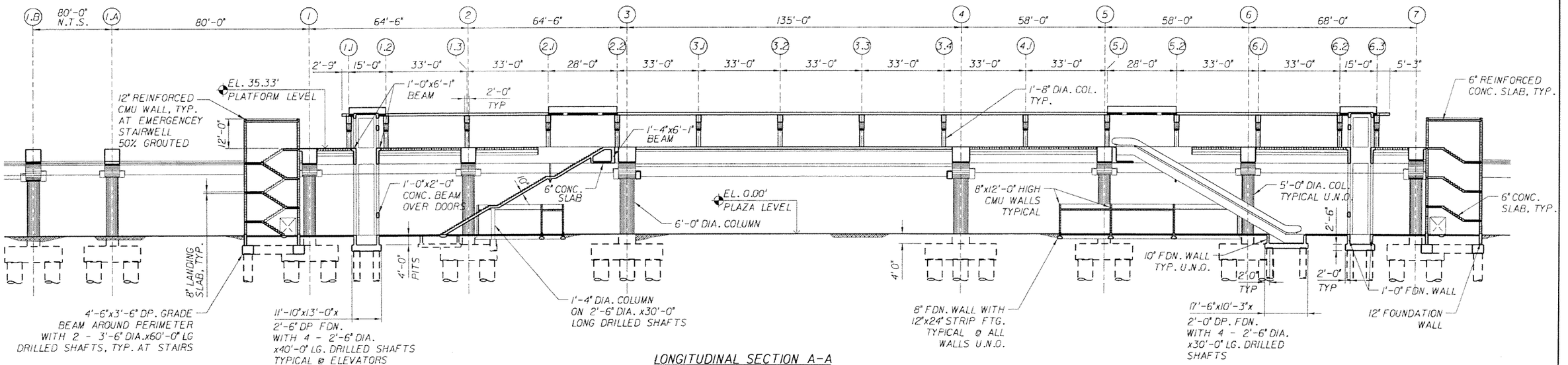

LONGITUDINAL SECTION A-A

SCALE: 1"=20'

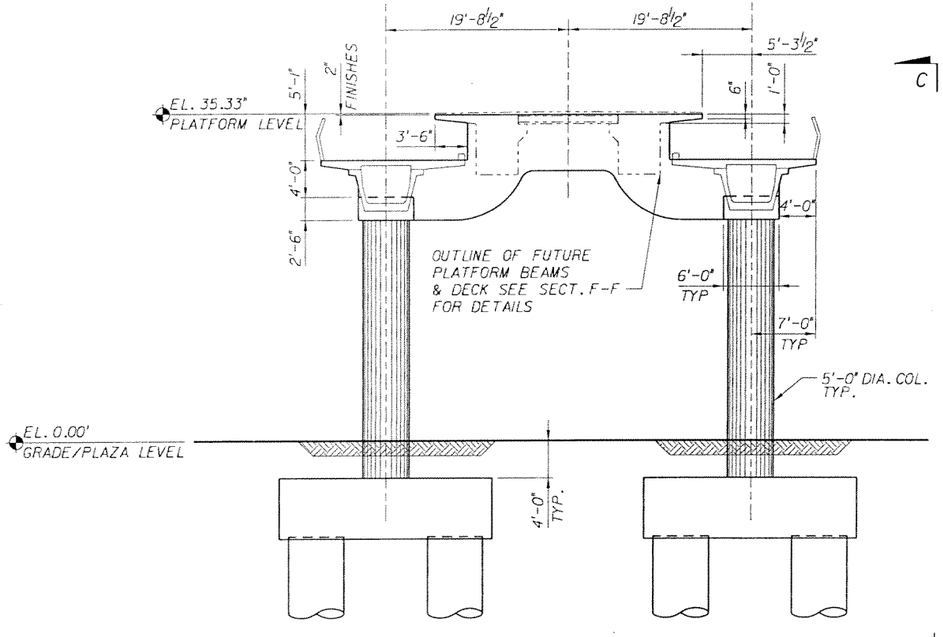

SECTION B-B (FUTURE EXTENSION)

SCALE: ⅛"=1'-0"

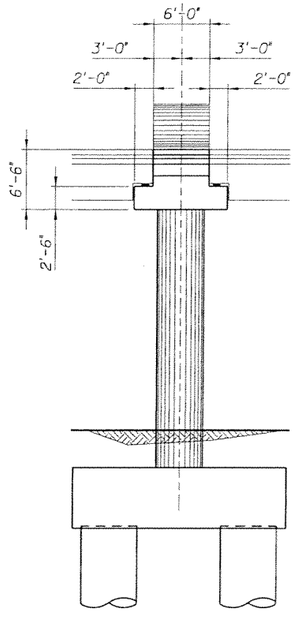

SECTION C-C

SCALE: ⅛"=1'-0"

NOTE:
TO THE BEST OF OUR KNOWLEDGE THIS PLAN AND THE SPECIFICATIONS APPLYING TO IT COMPLY WITH APPLICABLE MINIMUM BUILDING CODE

SUBJECT TO CHANGE

CS/AKR	MAY 2006						
Designed by	Date						
AC	MAY 2006						
Drawn by	Date						
CS	MAY 2006						
Checked by	Date						
Approved by	Date	No.	Date	By / Chk	App.	Revisions	

NORTH CORRIDOR METRORAIL EXTENSION - PRELIMINARY ENGINEERING (100% SUBMITTAL)

STRUCTURES - STATION

MIAMI-DADE TRANSIT

PARSONS
7600 CORPORATE CENTER DRIVE, SUITE 500
MIAMI, FLORIDA 33126
PHONE: (786) 464-1000 FAX: (786) 845-7119
CERTIFICATE OF AUTHORIZATION NO. 1838
Approved Date

EarthTech
A Tyco International Ltd Company
Reynaldo R. Rivas, P.E.
Florida License No. 41174
3750 NW 87th Avenue, Suite 300
Miami, FL 33178
Certificate of Authorization No. 8115
Approved Date

NW 199th STREET
SECTION SHEET 1 of 3

Scale AS NOTED | Drawing SSP-S6-03 | Sheet 132

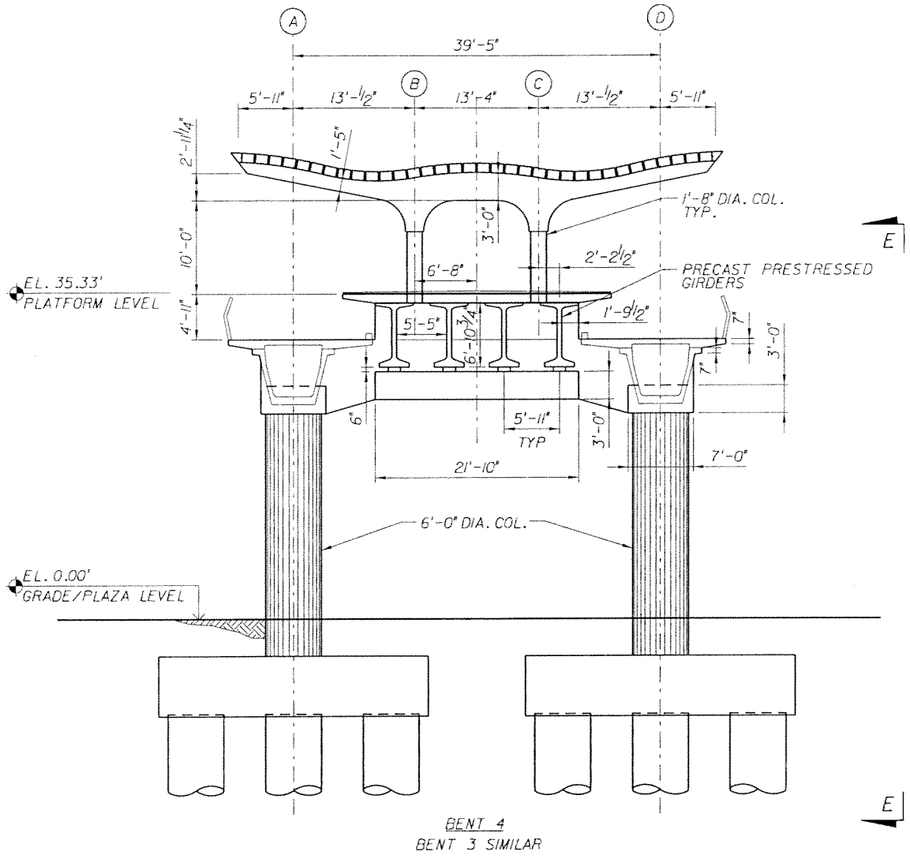

SECTION D-D (135' SPAN)

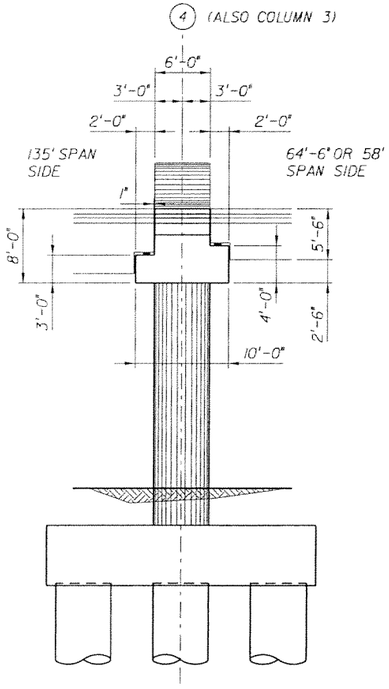

SECTION E-E

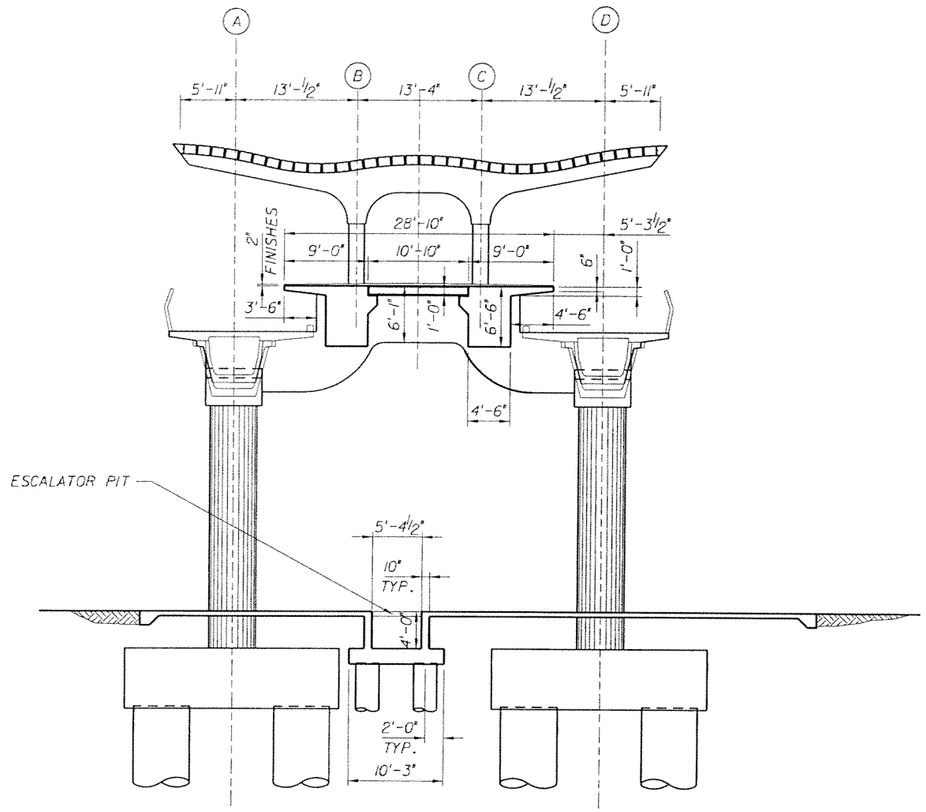

SECTION F-F

NOTE:
TO THE BEST OF OUR KNOWLEDGE THIS PLAN AND THE SPECIFICATIONS APPLYING TO IT COMPLY WITH APPLICABLE MINIMUM BUILDING CODE

SUBJECT TO CHANGE

CS/AKR MAY 2006 Designed by Date						NORTH CORRIDOR METRORAIL EXTENSION - PRELIMINARY ENGINEERING (100% SUBMITTAL)
AC MAY 2006 Drawn by Date						MIAMI-DADE TRANSIT
CS MAY 20069 Checked by Date						PARSONS 7600 CORPORATE CENTER DRIVE, SUITE 500 MIAMI, FLORIDA 33126 PHONE: (786) 464-1000 FAX: (786) 845-7119 CERTIFICATE OF AUTHORIZATION NO. 1838
Approved by Date	No.	Date	By / Chk	App.	Revisions	Approved Date

EarthTech A Tyco International Ltd Company
Reynaldo R. Rivas, P.E.
Florida License No. 41174
3750 NW 87th Avenue, Suite 300
Miami, FL 33178
Certificate of Authorization No. 8115
Approved Date

STRUCTURES - STATION

NW 199th STREET
SECTION SHEET 2 of 3

Scale 1/8" = 1'-0" | Drawing SSP-S6-04 | Sheet 133

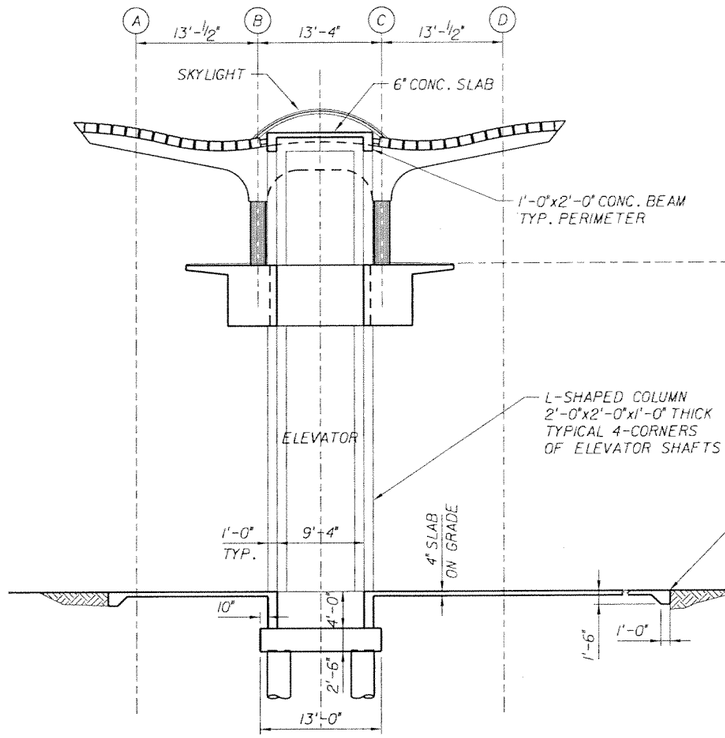

SECTION G-G

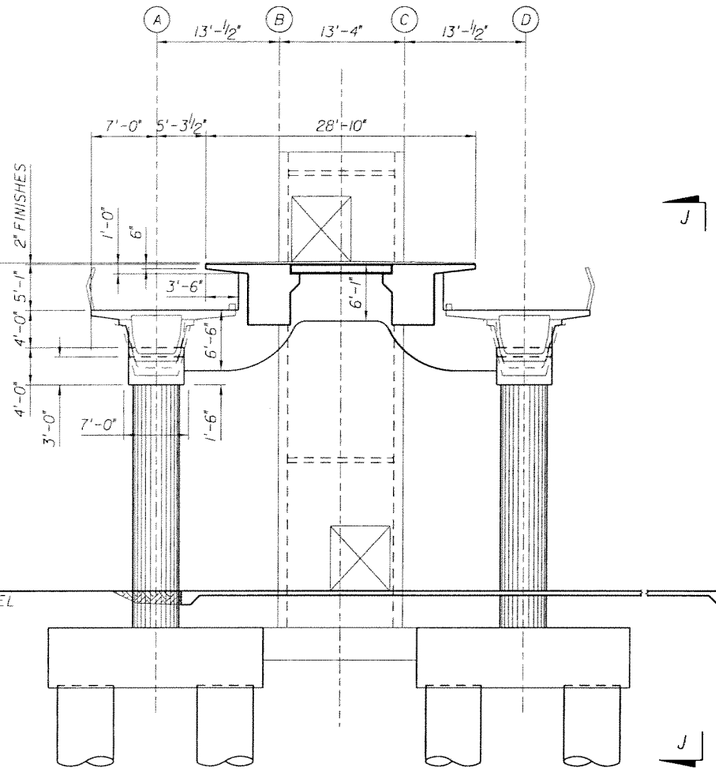

BENT 7

BENT 1,8 SIMILAR

SECTION H-H

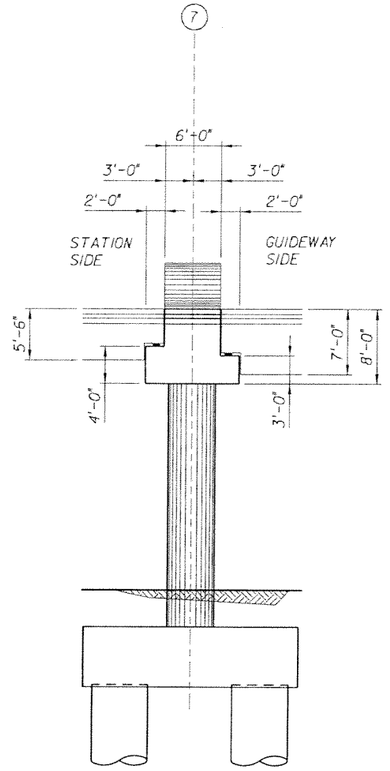

SECTION J-J

NOTE:
TO THE BEST OF OUR KNOWLEDGE THIS PLAN AND THE SPECIFICATIONS APPLYING TO IT COMPLY WITH APPLICABLE MINIMUM BUILDING CODE

SUBJECT TO CHANGE

CS/AKR Designed by	MAY 2006 Date						
AC Drawn by	MAY 2006 Date						
CS Checked by	MAY 2006 Date						
Approved by	Date	No.	Date	By / Chk	App.	Revisions	

NORTH CORRIDOR METRORAIL EXTENSION - PRELIMINARY ENGINEERING (100% SUBMITTAL)

MIAMI-DADE TRANSIT

PARSONS
7600 CORPORATE CENTER DRIVE, SUITE 500
MIAMI, FLORIDA 33126
PHONE: (786) 464-1000 FAX: (786) 845-7119
CERTIFICATE OF AUTHORIZATION NO. 1838

Approved | Date

EarthTech
A Tyco International Ltd Company
Reynaldo R. Rivas, P.E.
Florida License No. 41174
3750 NW 87th Avenue, Suite 300
Miami, FL 33178
Certificate of Authorization No. 8115

Approved | Date

STRUCTURES - STATION

NW 199th STREET
SECTION SHEET 3 of 3

Scale 1/8" = 1'-0" | Drawing SSP-S6-05 | Sheet 134

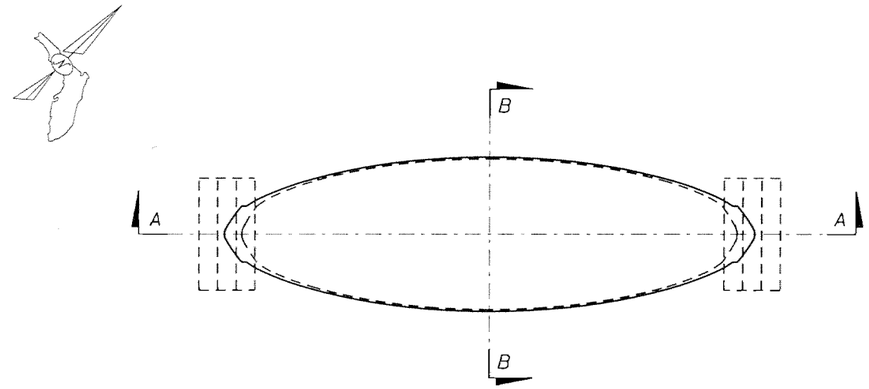

ENTRANCE CANOPY PLAN

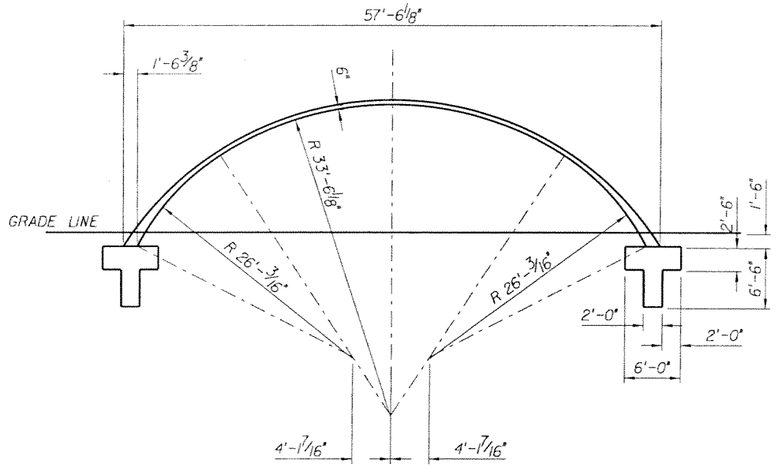

SECTION A-A

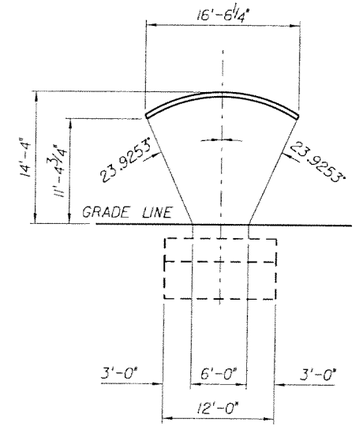

SECTION B-B

NOTE:
TO THE BEST OF OUR KNOWLEDGE THIS PLAN AND THE SPECIFICATIONS APPLYING TO IT COMPLY WITH APPLICABLE MINIMUM BUILDING CODE

SUBJECT TO CHANGE

CS/AR Designed by	MAY 2006 Date					
AC Drawn by	MAY 2006 Date					
CS Checked by	MAY 2006 Date					
Approved by	Date	No.	Date	By / Chk	App.	Revisions

NORTH CORRIDOR METRORAIL EXTENSION - PRELIMINARY ENGINEERING (100% SUBMITTAL)

STRUCTURES - STATION

MIAMI-DADE TRANSIT

PARSONS
7600 CORPORATE CENTER DRIVE, SUITE 500
MIAMI, FLORIDA 33126
PHONE: (786) 464-1000 FAX: (786) 845-7119
CERTIFICATE OF AUTHORIZATION NO. 1638

Approved | Date

EarthTech
A Tyco International Ltd Company
Reynaldo A. Rivas, P.E.
Florida License No. 41174
3750 NW 87th Avenue, Suite 300
Miami, FL 33178
Certificate of Authorization No. 8115

Approved | Date

NW 199th STREET ENTRANCE ROOF SHELL STRUCTURE DETAILS

Scale 1/8"=1'-0" | Drawing SSP-S6-06 | Sheet 135

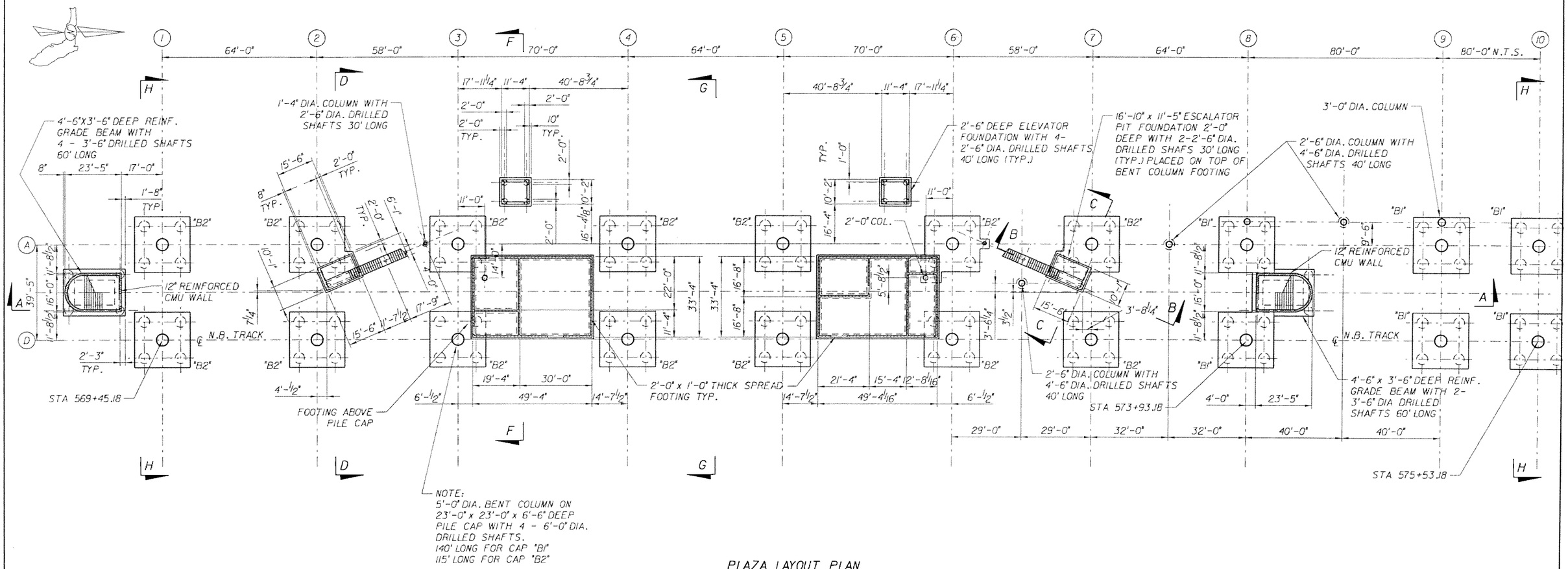

NOTE:
5'-0" DIA. BENT COLUMN ON 23'-0" x 23'-0" x 6'-6" DEEP PILE CAP WITH 4 - 6'-0" DIA. DRILLED SHAFTS.
140' LONG FOR CAP "B1"
115' LONG FOR CAP "B2"

PLAZA LAYOUT PLAN

NOTE:
TO THE BEST OF OUR KNOWLEDGE THIS PLAN AND THE SPECIFICATIONS APPLYING TO IT COMPLY WITH APPLICABLE MINIMUM BUILDING CODE

SUBJECT TO CHANGE

CS/DY MAY 2006 Designed by Date						NORTH CORRIDOR METRORAIL EXTENSION - PRELIMINARY ENGINEERING (100% SUBMITTAL)
PSG MAY 2006 Drawn by Date						STRUCTURES - STATION
CS MAY 2006 Checked by Date						NW 215th STREET PLAZA LAYOUT PLAN
Approved by Date	No.	Date	By / Chk	App.	Revisions	

MIAMI-DADE TRANSIT

PARSONS
7600 CORPORATE CENTER DRIVE, SUITE 500
MIAMI, FLORIDA 33126
PHONE: (786) 464-1000 FAX: (786) 845-7119
CERTIFICATE OF AUTHORIZATION NO. 1838
Approved Date

EarthTech
A Tyco International Ltd. Company
Reynaldo R. Rivas, P.E.
Florida License No. 41174
3750 NW 87th Avenue, Suite 300
Miami, FL 33178
Certificate of Authorization No. 8115
Approved Date

Scale 1" = 20' | Drawing SSP-S7-01 | Sheet 136

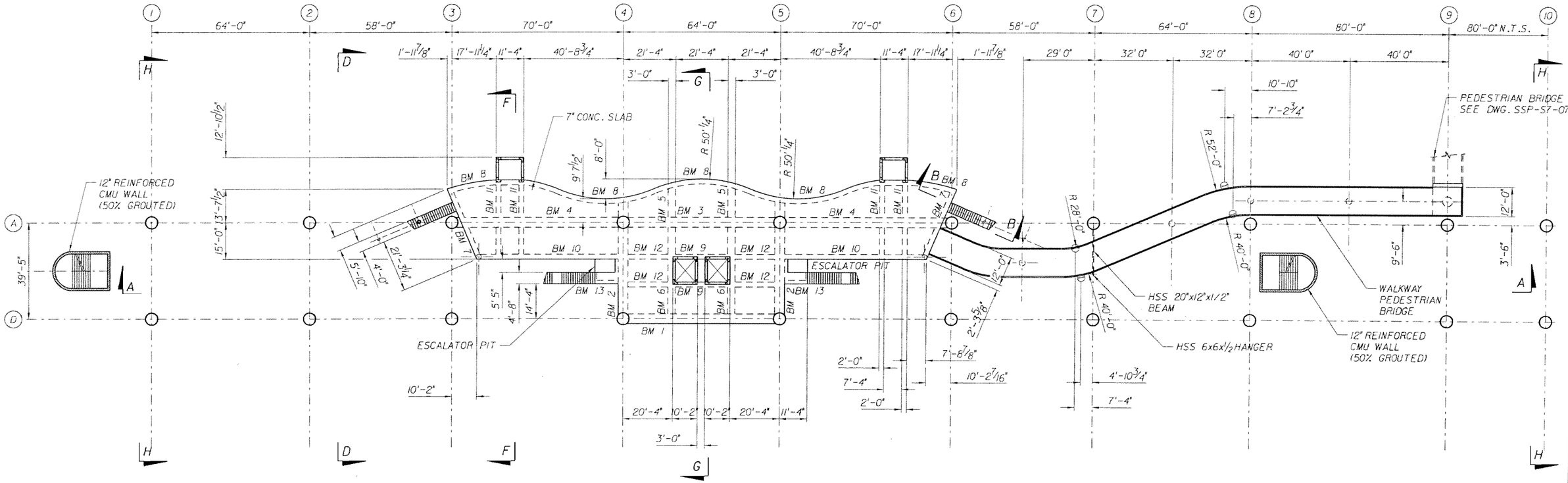

BEAM SCHEDULE

BEAM MARK	BEAM SIZE (IN)
BM 1	48 X 60 DEEP
BM 2	48 x 60 DEEP
BM 3	48 x 60 DEEP
BM 4	48 x 60 DEEP
BM 5	36 x 48 DEEP
BM 6	36 x 48 DEEP
BM 7	36 x 42 DEEP
BM 8	24 x 48 DEEP
BM 9	24 x 48 DEEP
BM 10	24 x 48 DEEP
BM 11	24 x 48 DEEP
BM 12	24 x 48 DEEP
BM 13	16 x 54 DEEP

MEZZANINE LEVEL PLAN

NOTE:
TO THE BEST OF OUR KNOWLEDGE THIS PLAN AND THE SPECIFICATIONS APPLYING TO IT COMPLY WITH APPLICABLE MINIMUM BUILDING CODE

SUBJECT TO CHANGE

CS/DY Designed by	MAY 2006 Date					
PSG Drawn by	MAY 2006 Date					
CS Checked by	MAY 2006 Date					
Approved by	Date	No.	Date	By / Chk	App.	Revisions

NORTH CORRIDOR METRORAIL EXTENSION - PRELIMINARY ENGINEERING (100% SUBMITTAL)

MIAMI-DADE TRANSIT

PARSONS
7600 CORPORATE CENTER DRIVE, SUITE 500
MIAMI, FLORIDA 33126
PHONE: (786) 464-1000 FAX: (786) 845-7119
CERTIFICATE OF AUTHORIZATION NO. 1838
Approved | Date

EarthTech
A Tyco International Ltd Company
Reynaldo R. Rivas, P.E.
Florida License No. 41174
3750 NW 87th Avenue, Suite 300
Miami, FL 33178
Certificate of Authorization No. 8115
Approved | Date

STRUCTURES - STATION

NW 215th STREET
MEZZANINE LAYOUT PLAN

Scale 1" = 20' | Drawing SSP-S7-02 | Sheet 137

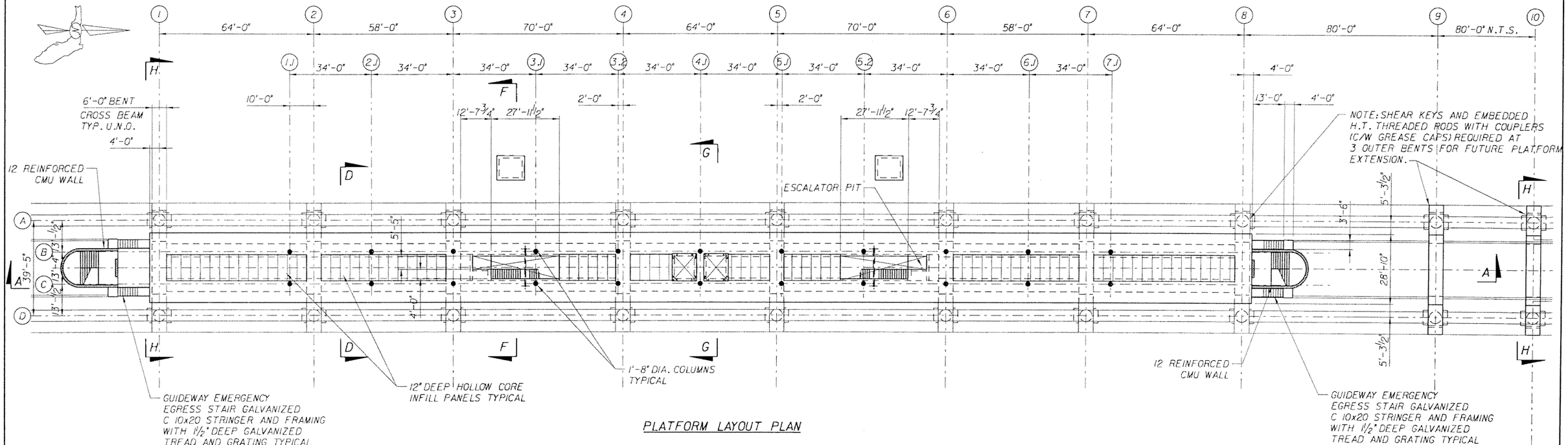

PLATFORM LAYOUT PLAN

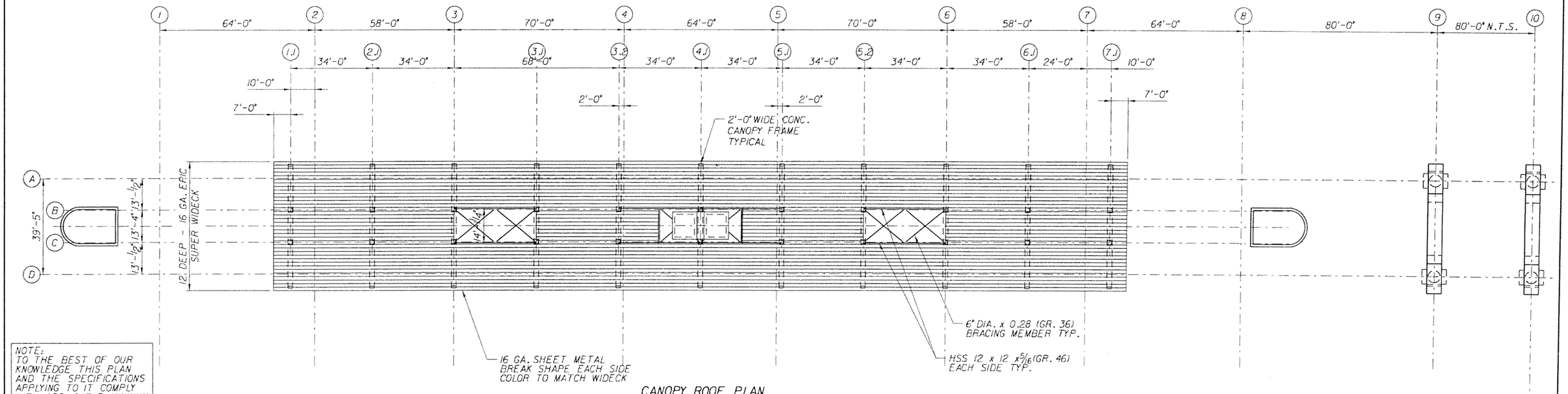

CANOPY ROOF PLAN

NOTE:
TO THE BEST OF OUR KNOWLEDGE THIS PLAN AND THE SPECIFICATIONS APPLYING TO IT COMPLY WITH APPLICABLE MINIMUM BUILDING CODE

SUBJECT TO CHANGE

CS/DY Designed by	MAY 2006 Date					
PSG Drawn by	MAY 2006 Date					
CS Checked by	MAY 2006 Date					
Approved by	Date	No.	Date	By / Chk	App.	Revisions

NORTH CORRIDOR METRORAIL EXTENSION - PRELIMINARY ENGINEERING (100% SUBMITTAL)

MIAMI-DADE TRANSIT

PARSONS
7600 CORPORATE CENTER DRIVE, SUITE 500
MIAMI, FLORIDA 33126
PHONE: (786) 464-1000 FAX: (786) 845-7119
CERTIFICATE OF AUTHORIZATION NO. 1638

EarthTech
A Tyco International Ltd Company
Reynaldo R. Rivas, P.E.
Florida License No. 41174
3750 NW 87th Avenue, Suite 300
Miami, FL 33178
Certificate of Authorization No. 8115

Approved	Date	Approved	Date

STRUCTURES - STATION

NW 215th STREET PLATFORM LAYOUT AND CANOPY ROOF PLAN

Scale	Drawing	Sheet
1" = 20'	SSP-S7-03	130

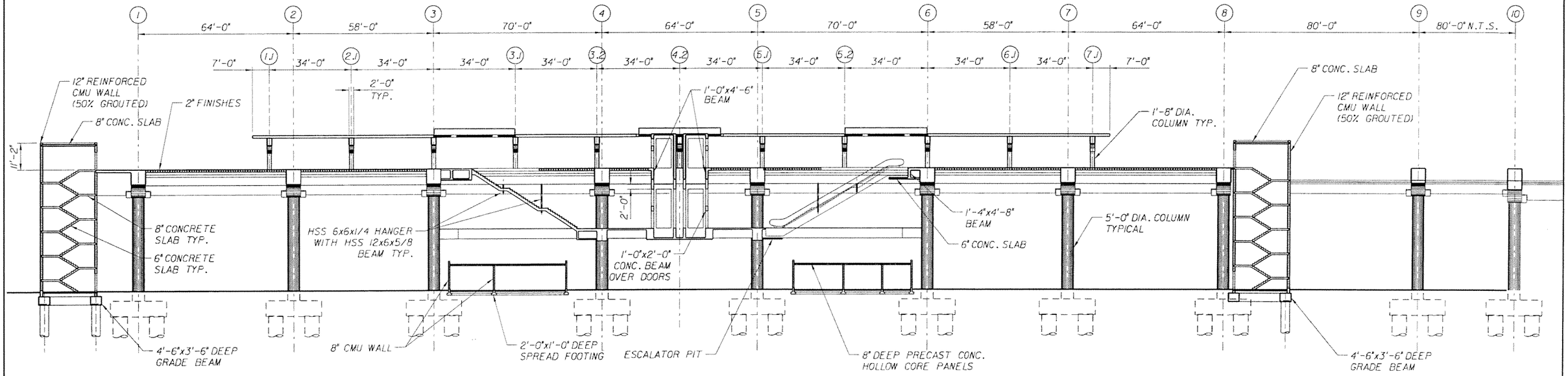

LONGITUDINAL SCTION A-A
SCALE: 1" = 20'

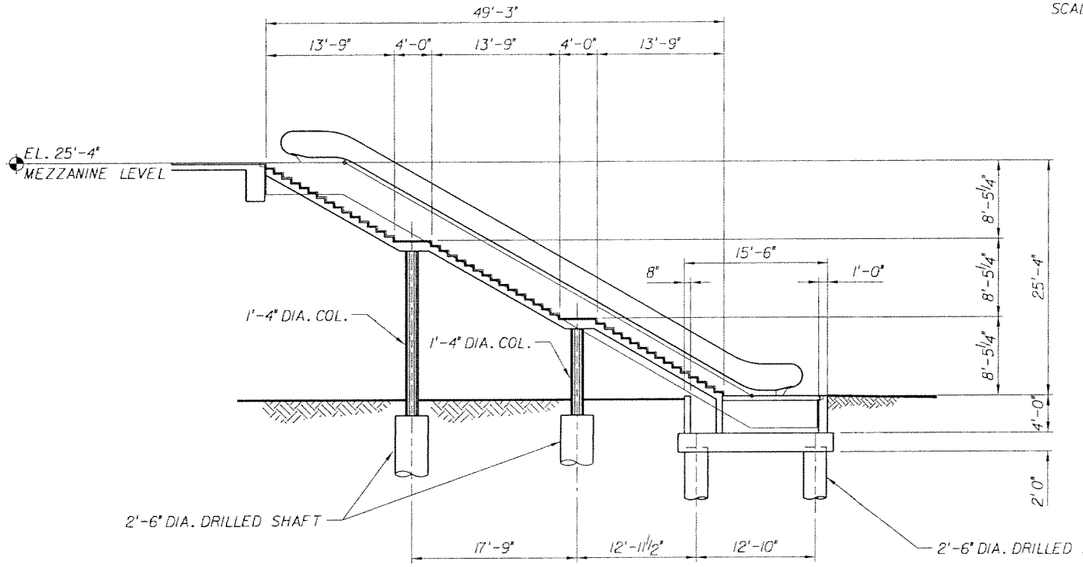

SCTION B-B
SCALE: 1/8" = 1'-0"

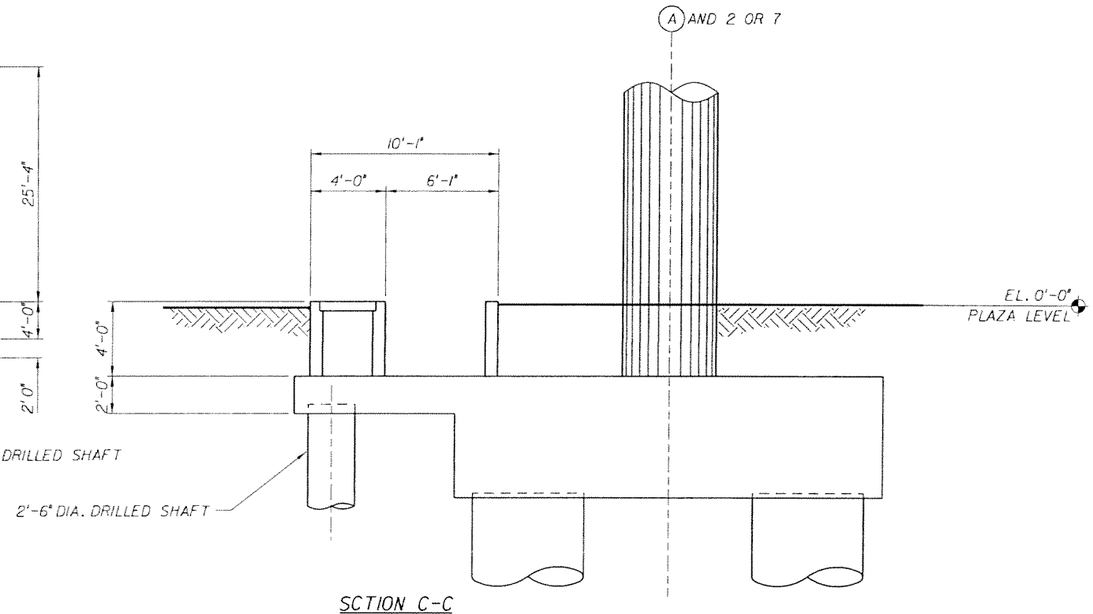

SCTION C-C
SCALE: 1/4" = 1'-0"

NOTE:
TO THE BEST OF OUR KNOWLEDGE THIS PLAN AND THE SPECIFICATIONS APPLYING TO IT COMPLY WITH APPLICABLE MINIMUM BUILDING CODE

SUBJECT TO CHANGE

CS/DY Designed by	MAY 2006 Date					
PSG Drawn by	MAY 2006 Date					
CS Checked by	MAY 2006 Date					
Approved by	Date	No.	Date	By / Chk	App.	Revisions

NORTH CORRIDOR METRORAIL EXTENSION - PRELIMINARY ENGINEERING (100% SUBMITTAL)

MIAMI-DADE TRANSIT

PARSONS
7600 CORPORATE CENTER DRIVE, SUITE 500
MIAMI, FLORIDA 33126
PHONE: (786) 464-1000 FAX: (786) 845-7119
CERTIFICATE OF AUTHORIZATION NO. 1838

EarthTech
A Tyco International Ltd Company
Reynaldo R. Rivas, P.E.
Florida License No. 41174
3750 NW 87th Avenue, Suite 300
Miami, FL 33178
Certificate of Authorization No. 8115

Approved	Date	Approved	Date

STRUCTURES - STATION

NW 215th STREET
SECTION SHEET 1 OF 3

Scale	Drawing	Sheet
AS NOTED	SSP-S7-04	139

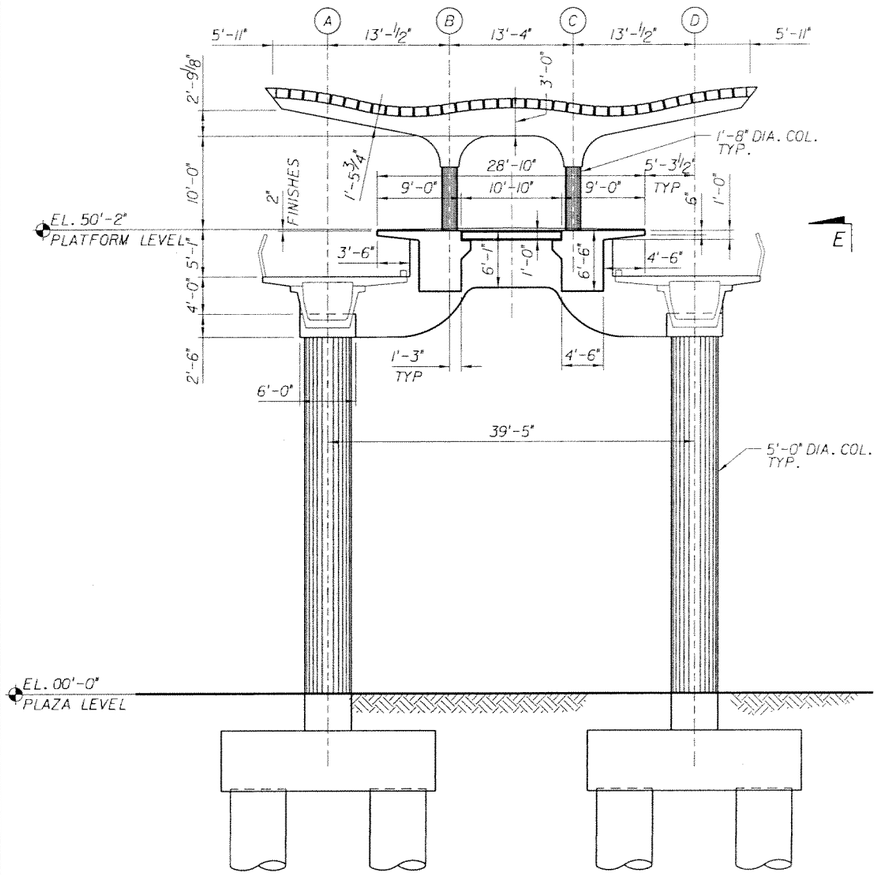

SECTION D-D (TYPICAL)

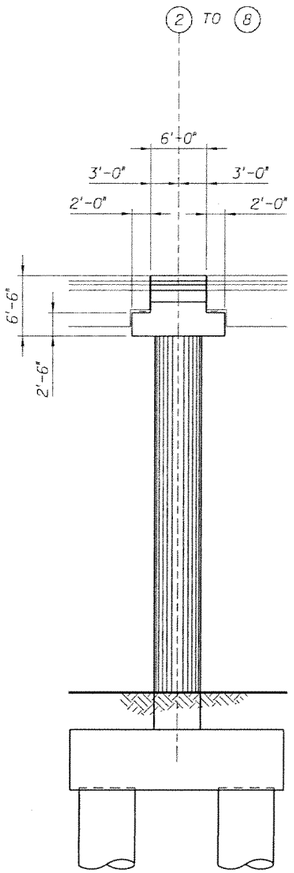

SECTION E-E

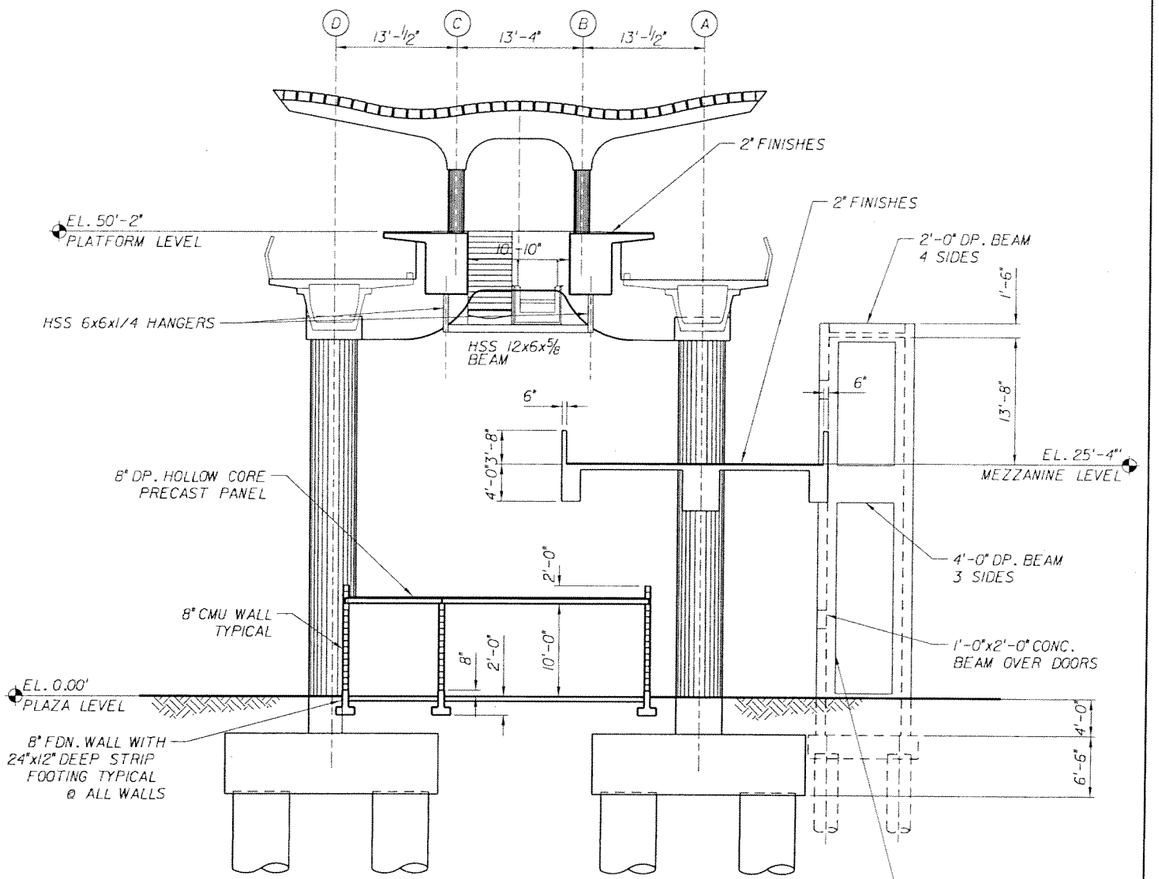

SECTION F-F

NOTE:
TO THE BEST OF OUR KNOWLEDGE THIS PLAN AND THE SPECIFICATIONS APPLYING TO IT COMPLY WITH APPLICABLE MINIMUM BUILDING CODE

SUBJECT TO CHANGE

CS/DY Designed by	MAY 2006 Date					NORTH CORRIDOR METRORAIL EXTENSION - PRELIMINARY ENGINEERING (100% SUBMITTAL)
PSG Drawn by	MAY 2006 Date					MIAMI-DADE TRANSIT
CS Checked by	MAY 2006 Date					PARSONS 7600 CORPORATE CENTER DRIVE, SUITE 500 MIAMI, FLORIDA 33126 PHONE: (786) 464-1000 FAX: (786) 845-7119 CERTIFICATE OF AUTHORIZATION NO. 1638
Approved by	Date	No.	Date	By / Chk	App.	Revisions

EarthTech (A Tyco International Ltd Company) Reynaldo A. Rivas, P.E. Florida License No. 41174 3750 NW 87th Avenue, Suite 300 Miami, FL 33178 Certificate of Authorization No. 8115

Approved | Date | Approved | Date

STRUCTURES - STATION

NW 215th STREET
SECTION SHEET 2 OF 3

Scale 1/8" = 1'-0" | Drawing SSP-S7-05 | Sheet 140

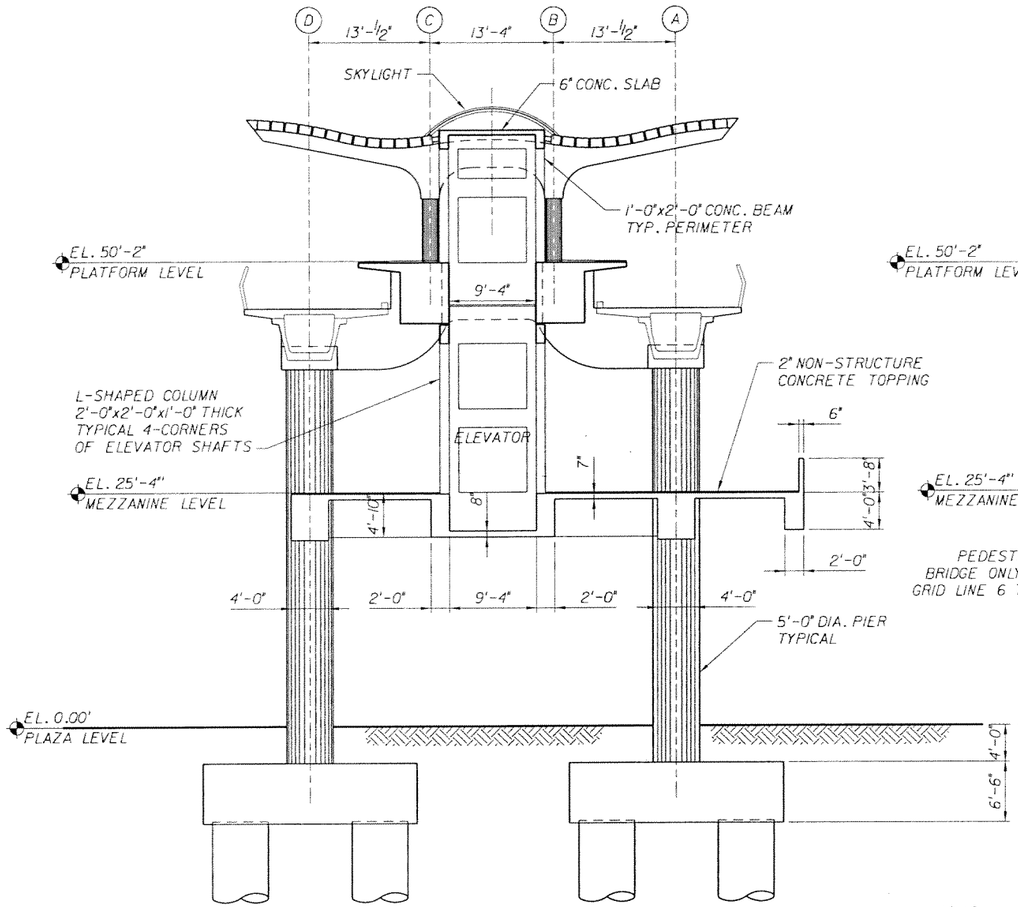

SECTION G-G
SCALE: 1/8"=1'-0"

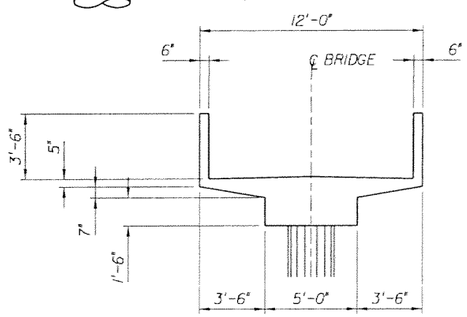

PEDESTRIAN BRIDGE SECTION
SCALE: 1/4"=1'-0"

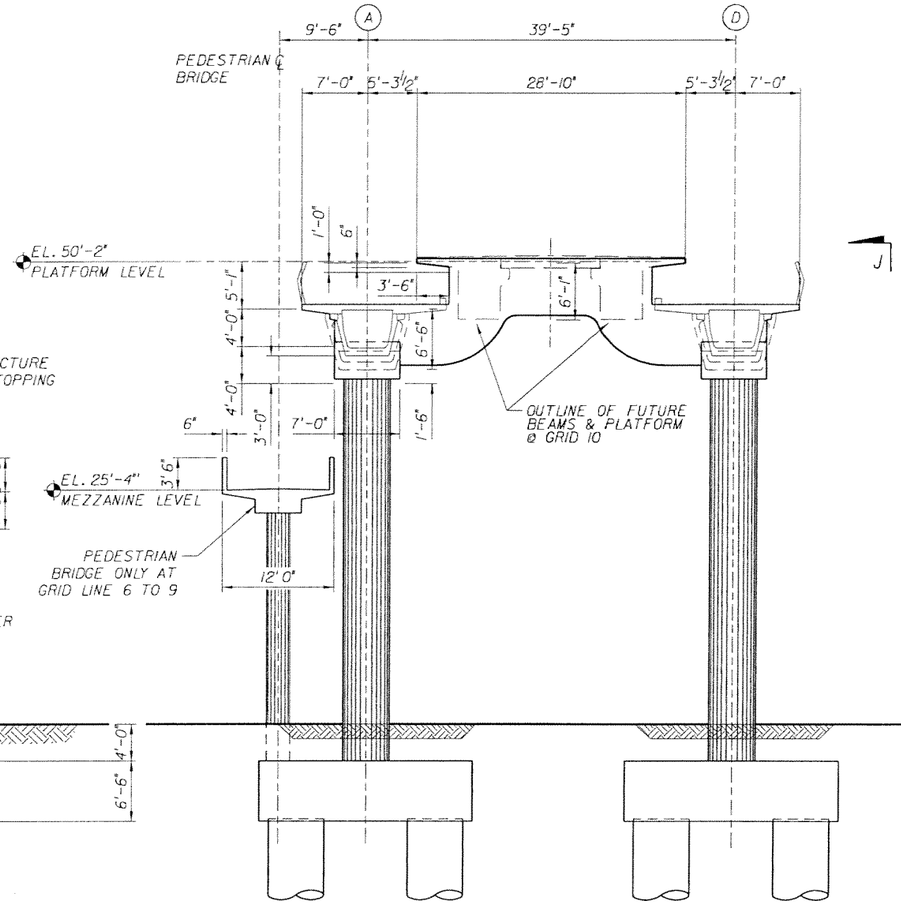

NOTE:
BENT AS SHOWN FOR 10, BENT AT GRID 1 SIMILAR, EXCEPT PLATFORM BEAMS AND HOLLOW CORE ARE IN PLACE.

SECTION H-H
SCALE: 1/8"=1'-0"

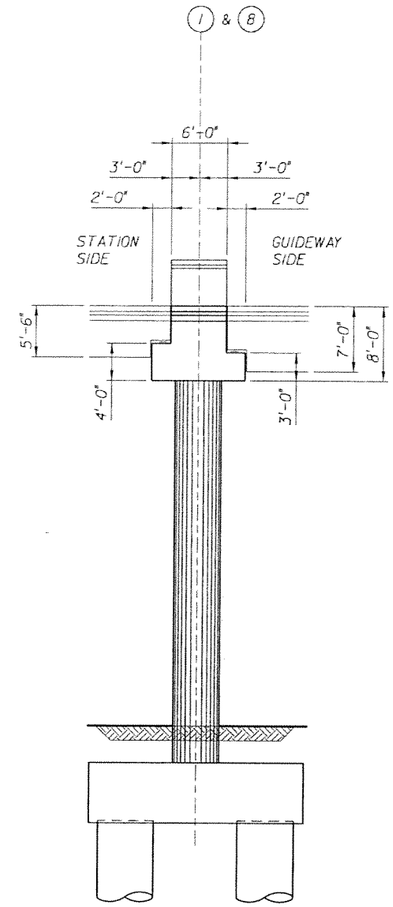

SECTION J-J
SCALE: 1/8"=1'-0"

NOTE:
TO THE BEST OF OUR KNOWLEDGE THIS PLAN AND THE SPECIFICATIONS APPLYING TO IT COMPLY WITH APPLICABLE MINIMUM BUILDING CODE

SUBJECT TO CHANGE

CS/DY Designed by	MAY 2006 Date					
PSG Drawn by	MAY 2006 Date					
CS Checked by	MAY 2006 Date					
Approved by	Date	No.	Date	By / Chk	App.	Revisions

NORTH CORRIDOR METRORAIL EXTENSION - PRELIMINARY ENGINEERING (100% SUBMITTAL)

MIAMI-DADE TRANSIT

PARSONS
7600 CORPORATE CENTER DRIVE, SUITE 500
MIAMI, FLORIDA 33126
PHONE: (786) 464-1000 FAX: (786) 845-7119
CERTIFICATE OF AUTHORIZATION NO. 1838

Approved | Date

EarthTech
A Tyco International Ltd Company
Reynaldo R. Rivas, P.E.
Florida License No. 41174
3750 NW 87th Avenue, Suite 300
Miami, FL 33178
Certificate of Authorization No. 8115

Approved | Date

STRUCTURES - STATION

NW 215th STREET
SECTION SHEET 3 OF 3

Scale: AS NOTED | Drawing: SSP-S7-06 | Sheet: 141

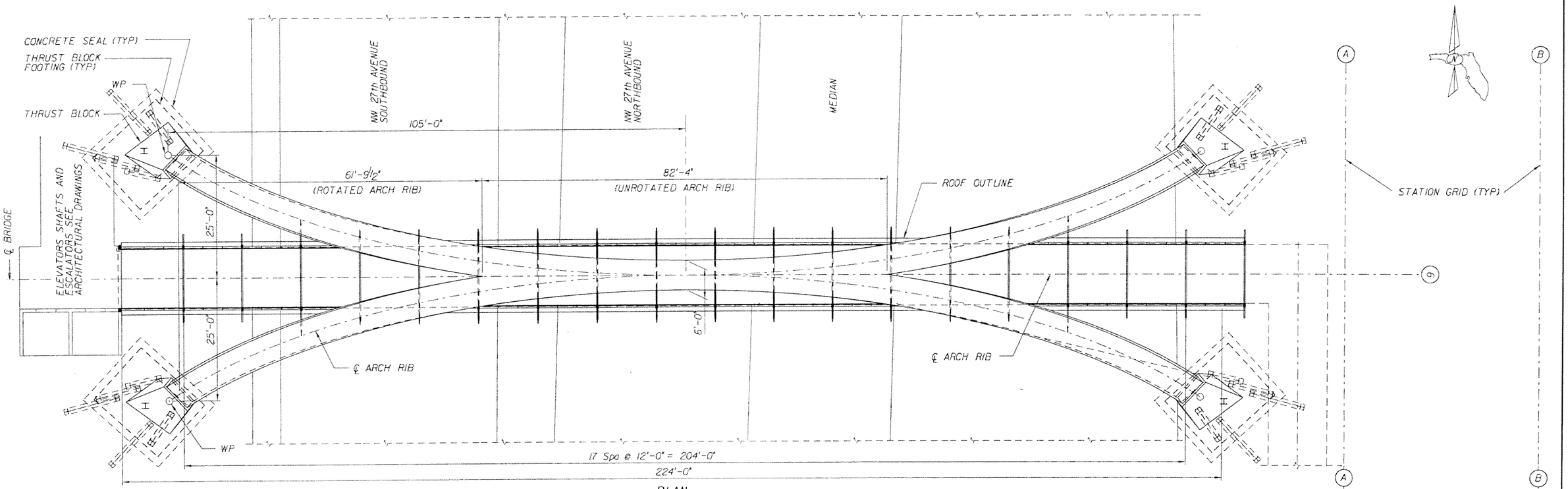

NOTE:
TO THE BEST OF OUR KNOWLEDGE THIS PLAN AND THE SPECIFICATIONS APPLYING TO IT COMPLY WITH APPLICABLE MINIMUM BUILDING CODE

SUBJECT TO CHANGE

WE/KF	MAY 2006					
Designed by	Date					
OR	MAY 2006					
Drawn by	Date					
WE	MAY 2006					
Checked by	Date					
Approved by	Date	No.	Date	By / Chk	App.	Revisions

NORTH CORRIDOR METRORAIL EXTENSION - PRELIMINARY ENGINEERING (100% SUBMITTAL)

STRUCTURES - STATION

MIAMI-DADE TRANSIT

PARSONS
7600 CORPORATE CENTER DRIVE, SUITE 500
MIAMI, FLORIDA 33126
PHONE: (786) 464-1000 FAX: (786) 845-7119
CERTIFICATE OF AUTHORIZATION NO. 1838

Approved | Date

EarthTech
A Tyco International Ltd Company
Reynaldo R. Rivas, P.E.
Florida License No. 41174
3750 NW 87th Avenue, Suite 300
Miami, FL 33178
Certificate of Authorization No. 8115

Approved | Date

NW 215th STREET PEDESTRIAN BRIDGE GENERAL ARRANGEMENT

Scale: 1" = 10' | Drawing: SSP-S7-07 | Sheet: 142

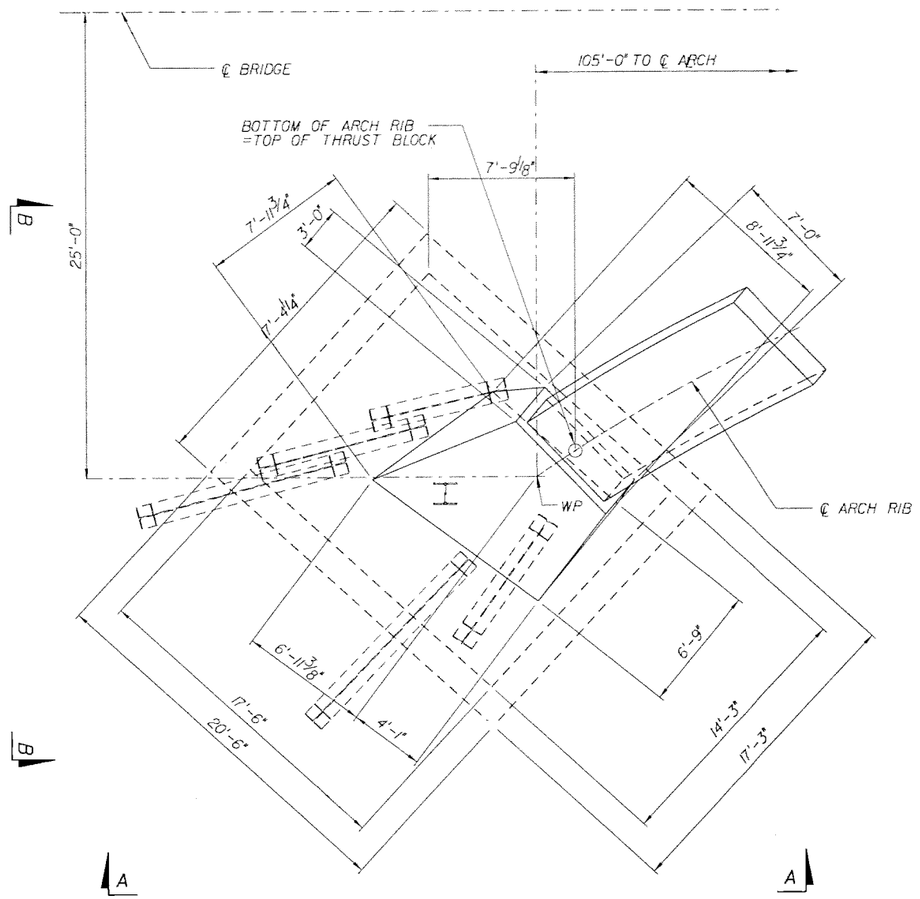

PLAN VIEW

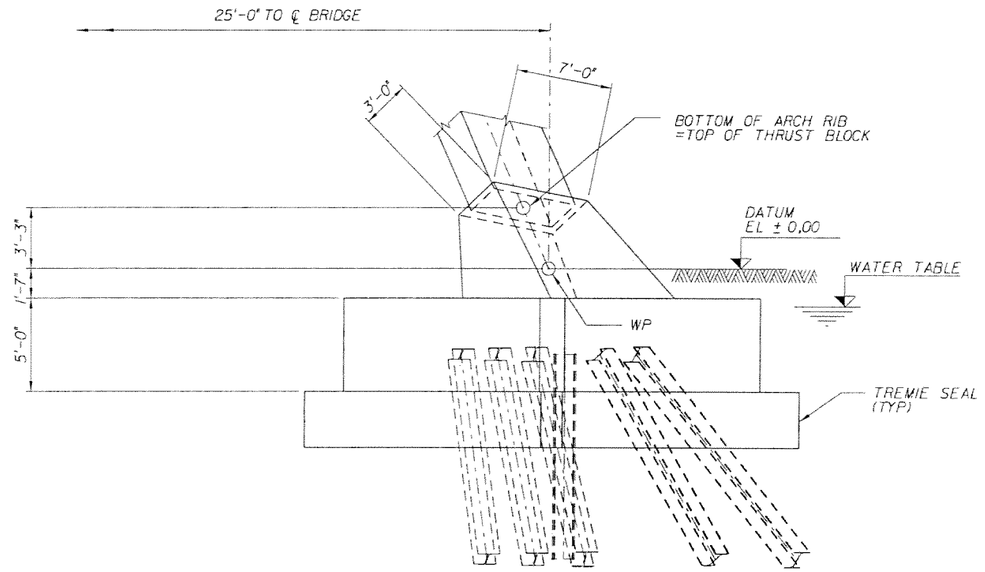

SECTION B-B

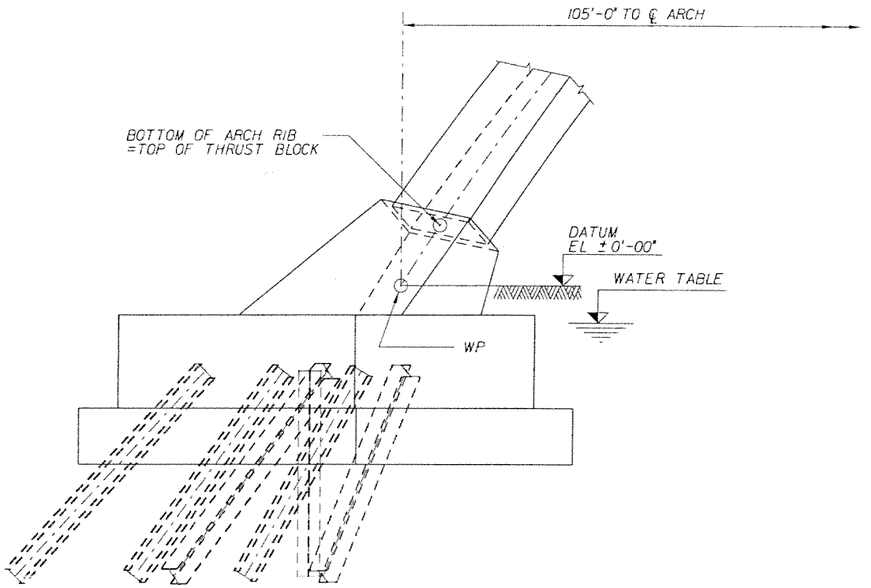

SECTION A-A

NOTES:

1. FOR WP (WORKING POINT) SEE "PLAN" ON DWG. SSP-S7-07
2. DIMENSIONS GIVEN ARE "TRUE LENGTH", NOT PROJECTED LENGTH.
3. WATER TABLE ASSUMED AT EL.(-)2'-0".

NOTE:
TO THE BEST OF OUR KNOWLEDGE THIS PLAN AND THE SPECIFICATIONS APPLYING TO IT COMPLY WITH APPLICABLE MINIMUM BUILDING CODE

SUBJECT TO CHANGE

WE/KF Designed by	MAY 2006 Date					
OR Drawn by	MAY 2006 Date					
WE Checked by	MAY 2006 Date					
Approved by	Date	No.	Date	By / Chk	App.	Revisions

NORTH CORRIDOR METRORAIL EXTENSION - PRELIMINARY ENGINEERING (100% SUBMITTAL)

STRUCTURES - STATION

MIAMI-DADE TRANSIT

PARSONS
7600 CORPORATE CENTER DRIVE, SUITE 500
MIAMI, FLORIDA 33126
PHONE: (786) 464-1000 FAX: (786) 845-7119
CERTIFICATE OF AUTHORIZATION NO. 1838
Approved | Date

EarthTech
A Tyco International Ltd Company
Reynaldo R. Rivas, P.E.
Florida License No. 41174
3750 NW 87th Avenue, Suite 300
Miami, FL 33178
Certificate of Authorization No. 8115
Approved | Date

NW 215th STREET
PEDESTRIAN BRIDGE
FOUNDATION DETAILS

Scale 1/4" = 1'-0" | Drawing SSP-S7-08 | Sheet 143

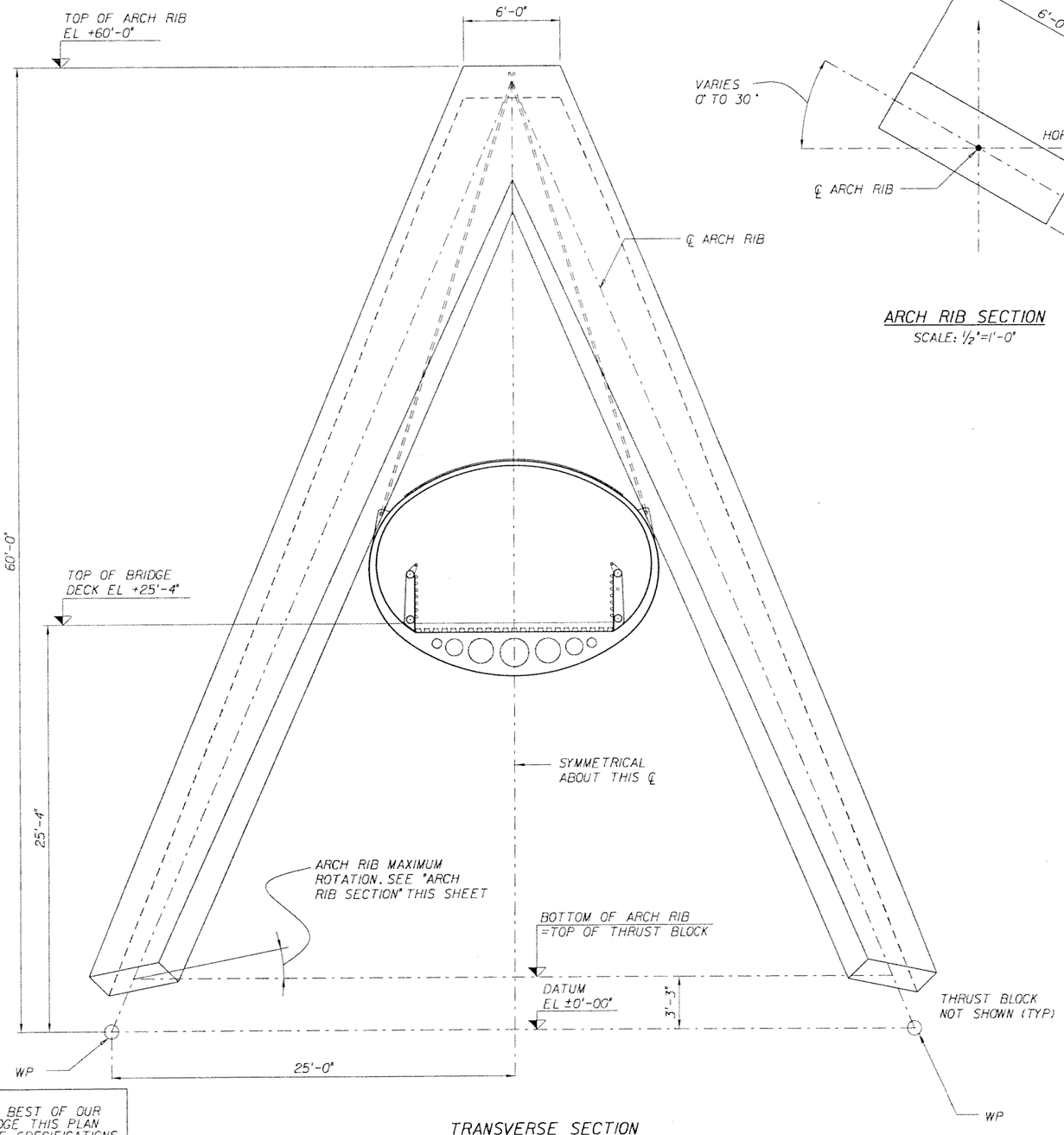

TRANSVERSE SECTION
SCALE: 1/4"=1'-0"

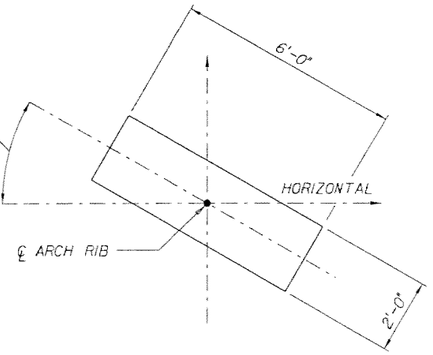

ARCH RIB SECTION
SCALE: 1/2"=1'-0"

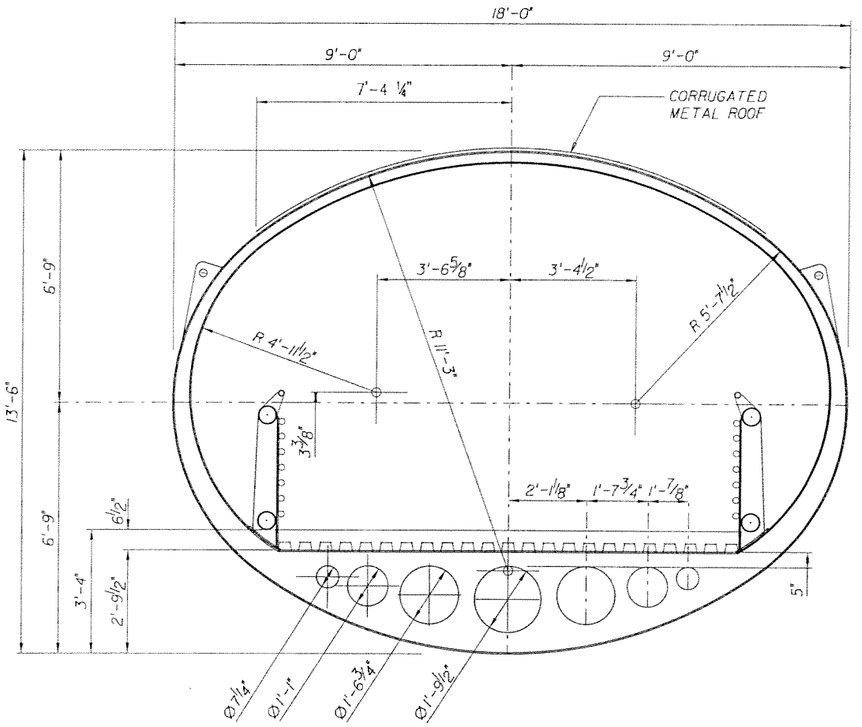

TRANSVERSE ELEVATION ELIPTICAL FRAME
SCALE: 1/2"=1'-0"

NOTE:
TO THE BEST OF OUR KNOWLEDGE THIS PLAN AND THE SPECIFICATIONS APPLYING TO IT COMPLY WITH APPLICABLE MINIMUM BUILDING CODE

GENERAL NOTES:

SPECIFICATIONS:

GUIDE SPECIFICATIONS FOR THE DESIGN OF PEDESTRIAN BRIDGES

AASHTO STANDARD SPECIFICATIONS FOR HIGHWAY BRIDGES-17th EDITION
(THIS IS THE CODE THAT IS CONSISTENT WITH PEDESTRIAN GUIDE SPEC.)

DESIGN LOADS:

PEDESTRIAN LOAD:	100 psf
WIND LOAD:	75 psf
WEARING SURFACE (TERRAZZO PAVEMENT):	9 psf
CONCRETE UNIT WEIGHT:	150 lbf/ft^3

CONCRETE:

RIB:	f'c=6,500 psi
DECK:	f'c=4,000 psi
FOOTINGS:	f'c=4,000 psi

REINFORCING STEEL: ASTM A-615 GRADE 60

STEEL:

STRUCTURAL STEEL:	ASTM A-588 GRADE 50
HANGERS:	IWRC GRADE 304 STAINLESS STEEL WIRE ROPE

SUBJECT TO CHANGE

WE/KF Designed by	MAY 2006 Date						
OR Drawn by	MAY 2006 Date						
WE Checked by	MAY 2006 Date						
Approved by	Date	No.	Date	By / Chk	App.	Revisions	

NORTH CORRIDOR METRORAIL EXTENSION - PRELIMINARY ENGINEERING (100% SUBMITTAL)

MIAMI-DADE TRANSIT

PARSONS
7500 CORPORATE CENTER DRIVE, SUITE 500
MIAMI, FLORIDA 33126
PHONE: (786) 464-1000 FAX: (786) 845-7119
CERTIFICATE OF AUTHORIZATION NO. 1838
Approved | Date

EarthTech
A Tyco International Ltd Company
Reynaldo R. Rivas, P.E.
Florida License No. 41174
3750 NW 87th Avenue, Suite 300
Miami, FL 33178
Certificate of Authorization No. 8115
Approved | Date

STRUCTURES - STATION

NW 215th STREET
PEDESTRIAN BRIDGE
SECTIONS & NOTES

Scale: AS NOTED | Drawing: SSP-S7-09 | Sheet: 149

0 20 80
Feet

LEGEND

- STREET TREE
- LARGE PALM TREE
- MID-SIZED PALM TREE
- SMALL ORNAMENTAL TREE
- EVERGREEN TREE
- SHRUB MASSES / GROUNCOVERS / PERENNIALS / ORNAMENTAL GRASSES

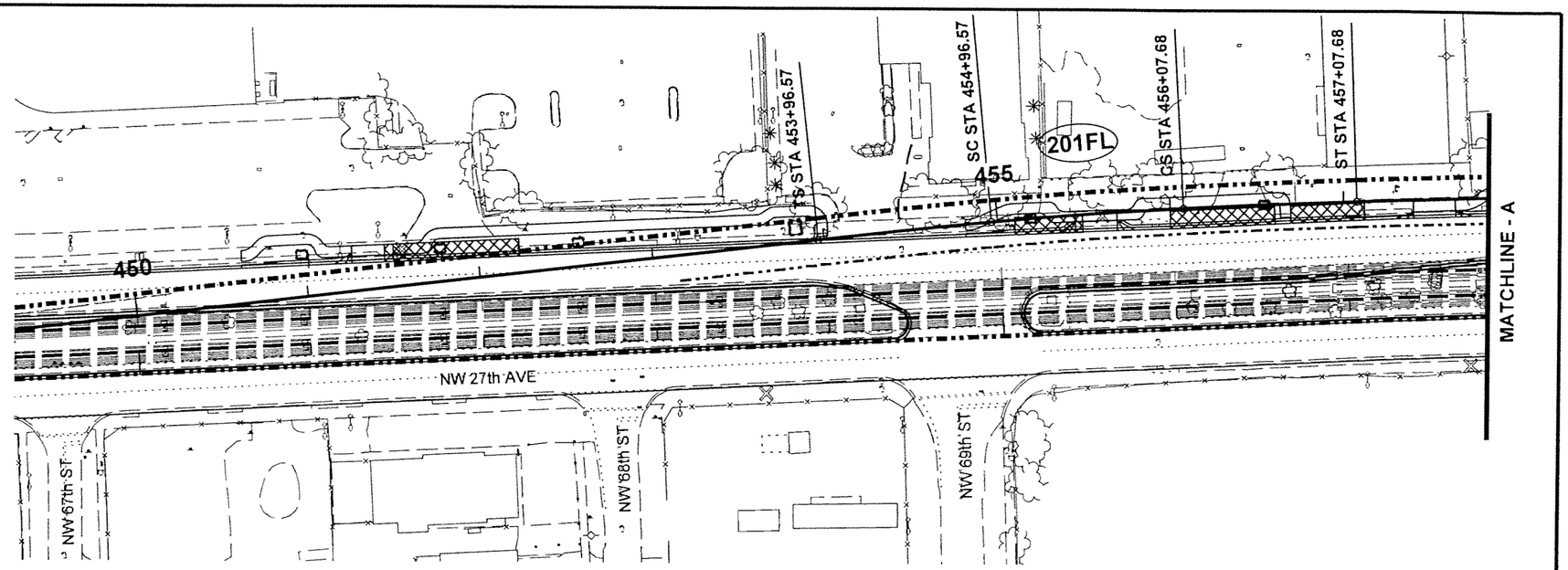

NO LANDSCAPING IMPROVEMENTS ON THIS SHEET

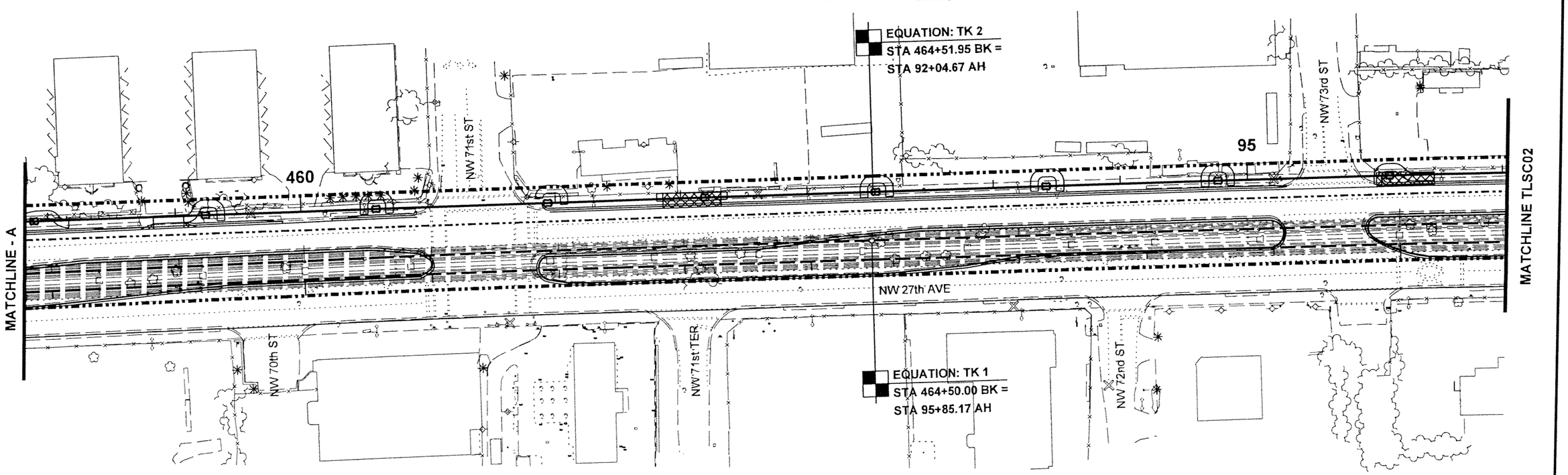

SUBJECT TO CHANGE

CAR/DWG	05-06				
Designed by	Date				
CAR	05-06				
Drawn by	Date				
DWG	05-06				
Checked by	Date				
Approved by	Date	No.	Date	By / Chk / App.	Revisions

NORTH CORRIDOR METRORAIL EXTENSION - PRELIMINARY ENGINEERING (100% SUBMITTAL)

MIAMI-DADE COUNTY

MIAMI-DADE TRANSIT

PARSONS
7600 CORPORATE CENTER DRIVE, SUITE 500
MIAMI, FLORIDA 33126
PHONE: (786) 464-1000 FAX: (786) 845-7119
CERTIFICATE OF AUTHORIZATION NO. 1838

Approved | Date | Approved | Date

LANDSCAPE

TRACKWAY LANDSCAPING

Scale 1" = 40' | Drawing TLSC01 | Sheet 45

5/10/2006 1:20:34 PM R:\646331 - North Corridor Metrorail\Landscape\Cadd\Contract\TLSC01.dgn

N

0 20 80
Feet

LEGEND

- STREET TREE
- SMALL ORNAMENTAL TREE
- LARGE PALM TREE
- EVERGREEN TREE
- MID-SIZED PALM TREE
- SHRUB MASSES / GROUNCOVERS / PERENNIALS / ORNAMENTAL GRASSES

MATCHLINE TLSC01

100

105

F.E.C. RAILROAD

PS NO. 15 TO STA 104+77.47 BK EXISTING METRORAIL WB TRACK = STA 106+98.17 AH TK 1 (NB) TRACK (NORTH CORRIDOR)

STA 101+38.46 WB TRACK = TK 1 (NB) TRACK

NW 27th AVE

"PATINA" TREATMENT DECORATIVE CONCRETE PAVEMENT

NW 75th ST

105

110

105

SHRUB MASSING (DWARF OLEANDER)

"PATINA" TREATMENT DECORATIVE CONCRETE PAVEMENT

MATCHLINE - A

MATCHLINE - A

108+26.38

SC STA 109+76.38

110

202FL

CS STA 110+83.06

SHRUB MASSING (DWARF OLEANDER)

ST STA 112+33.06

TS STA 113+39.52

SHRUB MASSING (DWARF OLEANDER)

SC STA 114+89.52

115

203FL

CS STA 115+89.57 79th ST

ST STA 117+39.57

115

110

NW 27th AVE

115

120

NW 77th ST

NW 79th ST

NW 79th TER

SHRUB MASSING (DWARF OLEANDER)

MATCHLINE SLSC8201

SUBJECT TO CHANGE

CAR/DWG	05-05					
Designed by	Date					
CAR	05-06					
Drawn by	Date					
DWG	05-06					
Checked by	Date					
Approved by	Date	No.	Date	By / Chk	App.	Revisions

NORTH CORRIDOR METRORAIL EXTENSION - PRELIMINARY ENGINEERING (100% SUBMITTAL)

LANDSCAPE

MIAMI-DADE COUNTY

MIAMI-DADE TRANSIT

PARSONS
7600 CORPORATE CENTER DRIVE, SUITE 500
MIAMI, FLORIDA 33126
PHONE: (786) 464-1000 FAX: (786) 845-7119
CERTIFICATE OF AUTHORIZATION NO. 1838

Approved | Date | Approved | Date

TRACKWAY LANDSCAPING

Scale 1" = 40' | Drawing TLSC02 | Sheet 146

5/10/2006 1:24:47 PM R:\646331 - North Corridor Metrorail\Landscape\Cadd\Contract\TLSC02.dgn

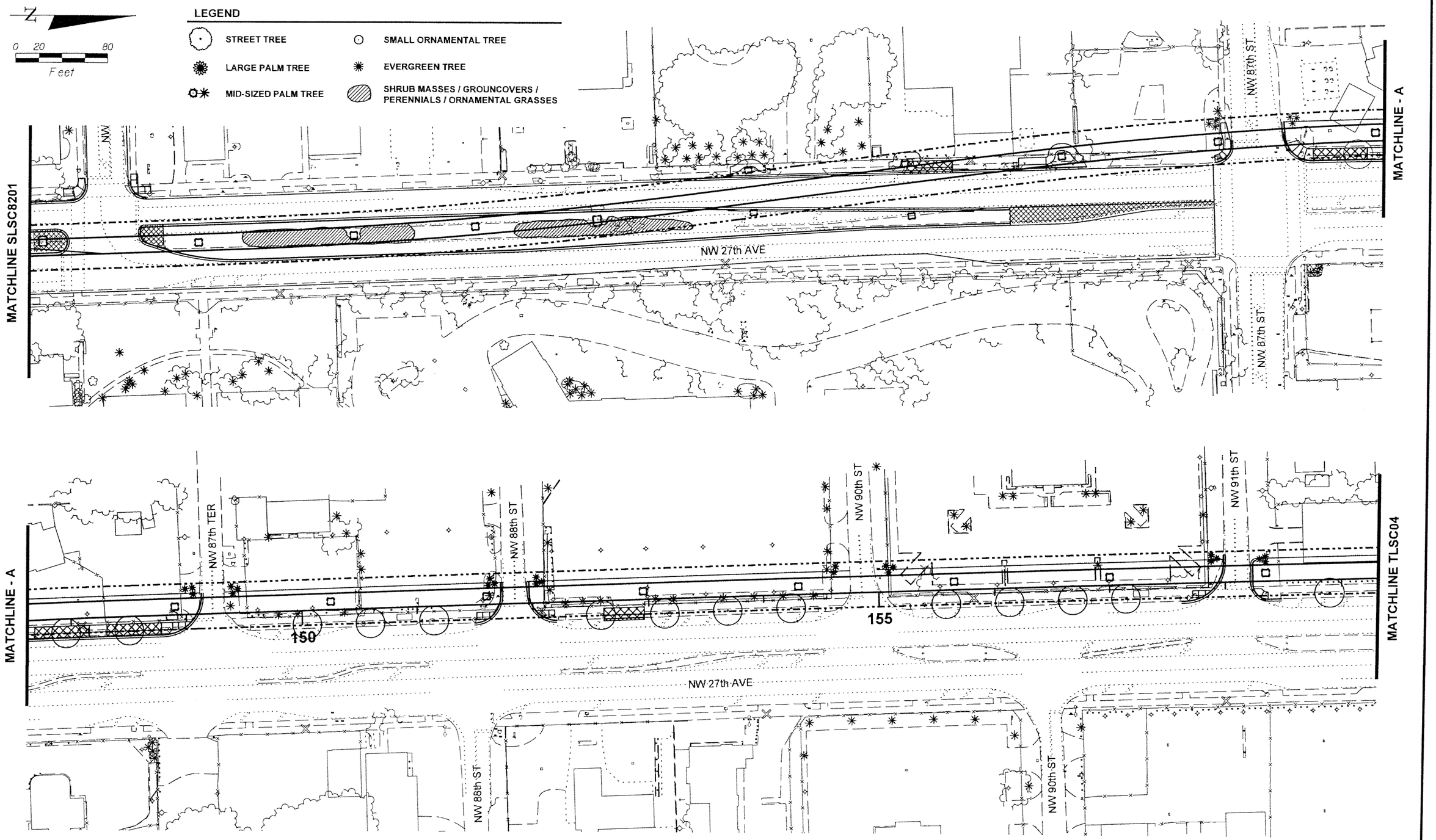

SUBJECT TO CHANGE

CAR/DWG Designed by	05-06 Date					
CAR Drawn by	05-06 Date					
DWG Checked by	05-06 Date					
Approved by	Date	No.	Date	By / Chk	App.	Revisions

NORTH CORRIDOR METRORAIL EXTENSION - PRELIMINARY ENGINEERING (100% SUBMITTAL)

MIAMI-DADE COUNTY

MIAMI-DADE TRANSIT

PARSONS
7600 CORPORATE CENTER DRIVE, SUITE 500
MIAMI, FLORIDA 33126
PHONE: (786) 464-1000 FAX: (786) 845-7119
CERTIFICATE OF AUTHORIZATION NO. 1838

Approved | Date | Approved | Date

LANDSCAPE

TRACKWAY LANDSCAPING

Scale 1" = 40' | Drawing TLSC03 | Sheet 147

5/10/2006 1:25:25 PM R:\645331 - North Corridor Metrorail\Landscape\Cadd\Contract\TLSC03.dgn

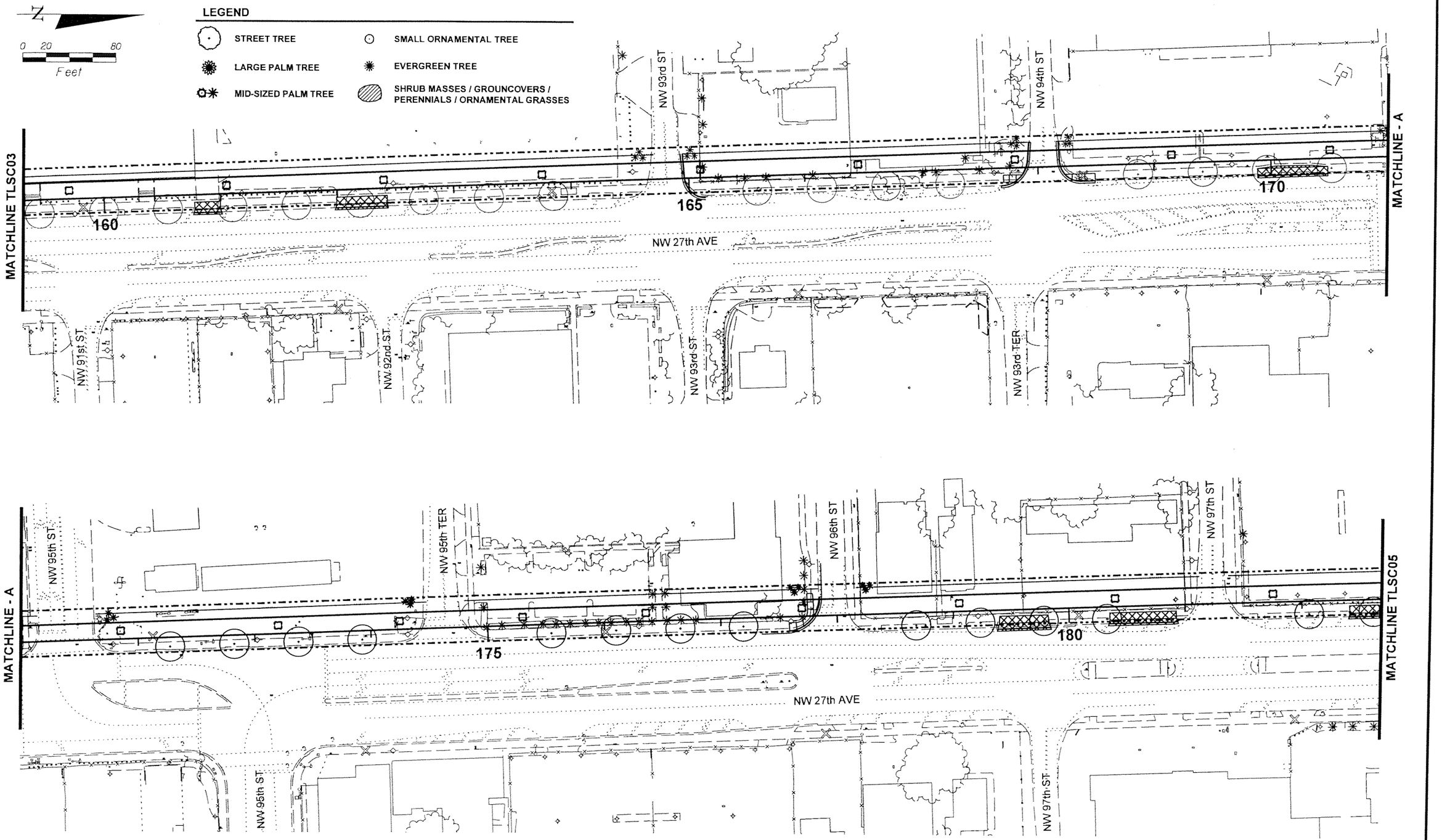

SUBJECT TO CHANGE

CAR/DWG 05-06 Designed by Date					
CAR 05-06 Drawn by Date					
DWG 05-06 Checked by Date					
Approved by Date	No.	Date	By / Chk	App.	Revisions

NORTH CORRIDOR METRORAIL EXTENSION - PRELIMINARY ENGINEERING (100% SUBMITTAL)

MIAMI-DADE COUNTY

MIAMI-DADE TRANSIT

PARSONS
7600 CORPORATE CENTER DRIVE, SUITE 500
MIAMI, FLORIDA 33126
PHONE: (786) 464-1000 FAX: (786) 845-7119
CERTIFICATE OF AUTHORIZATION NO. 1838

Approved | Date | Approved | Date

LANDSCAPE

TRACKWAY LANDSCAPING

Scale 1" = 40' | Drawing TLSC04 | Sheet 48

5/10/2006 1:13:52 PM R:\6468331 - North Corridor Metrorail\Landscape\Cadd\Contract\TLSC04.dgn

N

0 20 80
Feet

LEGEND

- STREET TREE
- SMALL ORNAMENTAL TREE
- LARGE PALM TREE
- EVERGREEN TREE
- MID-SIZED PALM TREE
- SHRUB MASSES / GROUNCOVERS / PERENNIALS / ORNAMENTAL GRASSES

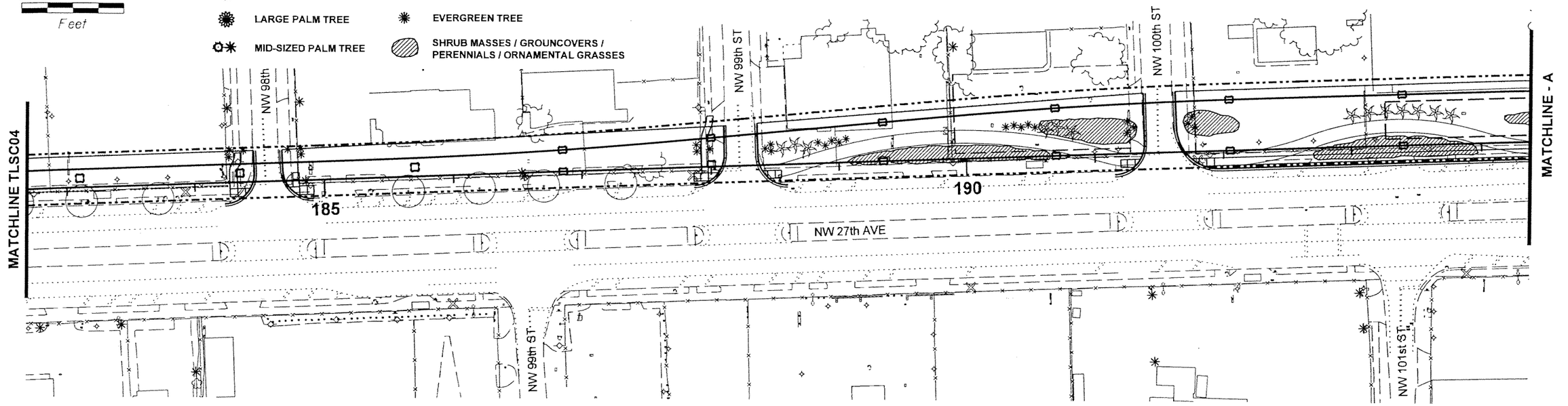

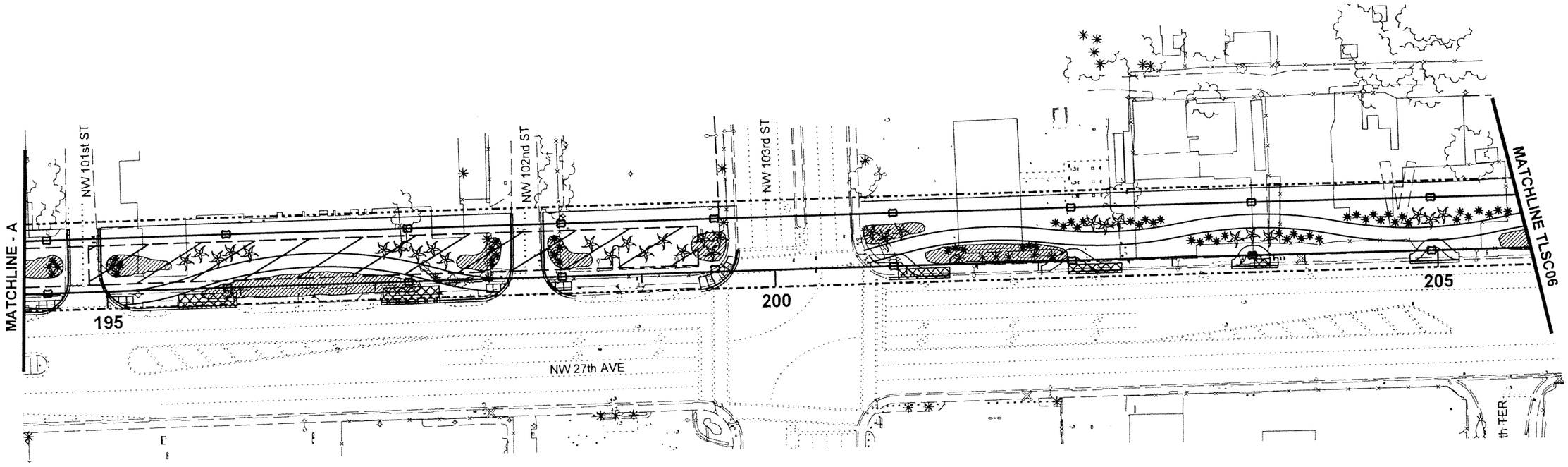

SUBJECT TO CHANGE

CAR/DWG 05-06 Designed by Date						
CAR 05-06 Drawn by Date						
DWG 05-06 Checked by Date						
Approved by Date	No.	Date	By / Chk	App.	Revisions	

NORTH CORRIDOR METRORAIL EXTENSION - PRELIMINARY ENGINEERING (100% SUBMITTAL)

LANDSCAPE

MIAMI-DADE COUNTY

MIAMI-DADE TRANSIT

PARSONS
7600 CORPORATE CENTER DRIVE, SUITE 500
MIAMI, FLORIDA 33126
PHONE: (786) 464-1000 FAX: (786) 845-7119
CERTIFICATE OF AUTHORIZATION NO. 1838

TRACKWAY LANDSCAPING

Approved	Date	Approved	Date	Scale	Drawing	Sheet
				1" = 40'	TLSC05	

5/10/2006 1:31:13 PM R:\646331 - North Corridor Metrorail\Landscape\Cadd\Contract\TLSC05.dgn

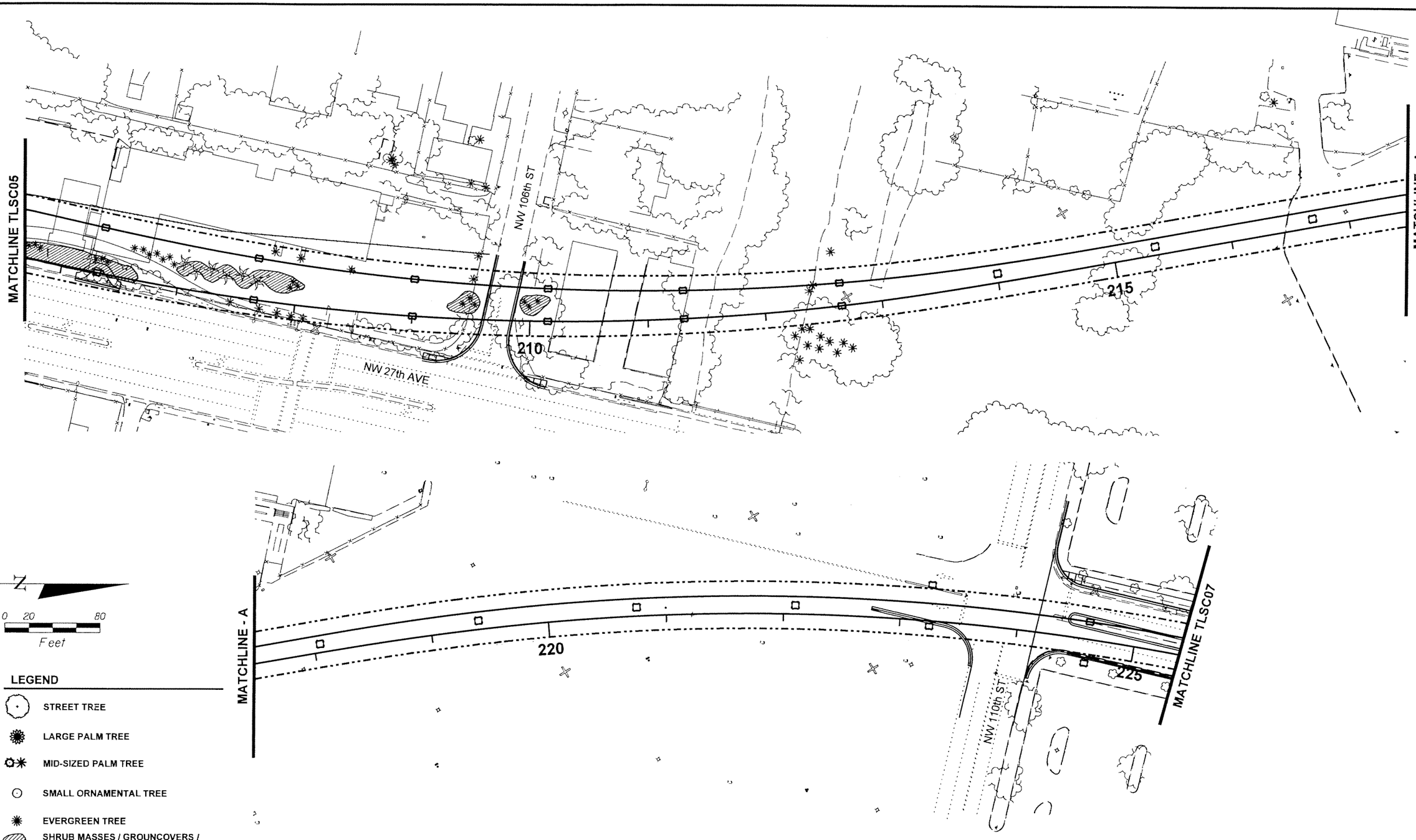

LEGEND

- STREET TREE
- LARGE PALM TREE
- MID-SIZED PALM TREE
- SMALL ORNAMENTAL TREE
- EVERGREEN TREE
- SHRUB MASSES / GROUNCOVERS / PERENNIALS / ORNAMENTAL GRASSES

SUBJECT TO CHANGE

CAR/DWG Designed by	05-06 Date					
CAR Drawn by	05-06 Date					
DWG Checked by	05-06 Date					
Approved by	Date	No.	Date	By / Chk	App.	Revisions

NORTH CORRIDOR METRORAIL EXTENSION - PRELIMINARY ENGINEERING (100% SUBMITTAL)

MIAMI-DADE COUNTY — MIAMI-DADE TRANSIT

PARSONS
7600 CORPORATE CENTER DRIVE, SUITE 500
MIAMI, FLORIDA 33126
PHONE: (786) 464-1000 FAX: (786) 845-7119
CERTIFICATE OF AUTHORIZATION NO. 1838

Approved | Date | Approved | Date

LANDSCAPE

TRACKWAY LANDSCAPING

Scale 1" = 40' | Drawing TLSC06 | Sheet 150

5/10/2006 1:32:30 PM R:\646331 - North Corridor Metrorail\Landscape\Cadd\Contract\TLSC06.dgn

N

0 20 80

Feet

LEGEND

- STREET TREE
- LARGE PALM TREE
- MID-SIZED PALM TREE
- SMALL ORNAMENTAL TREE
- EVERGREEN TREE
- SHRUB MASSES / GROUNCOVERS / PERENNIALS / ORNAMENTAL GRASSES

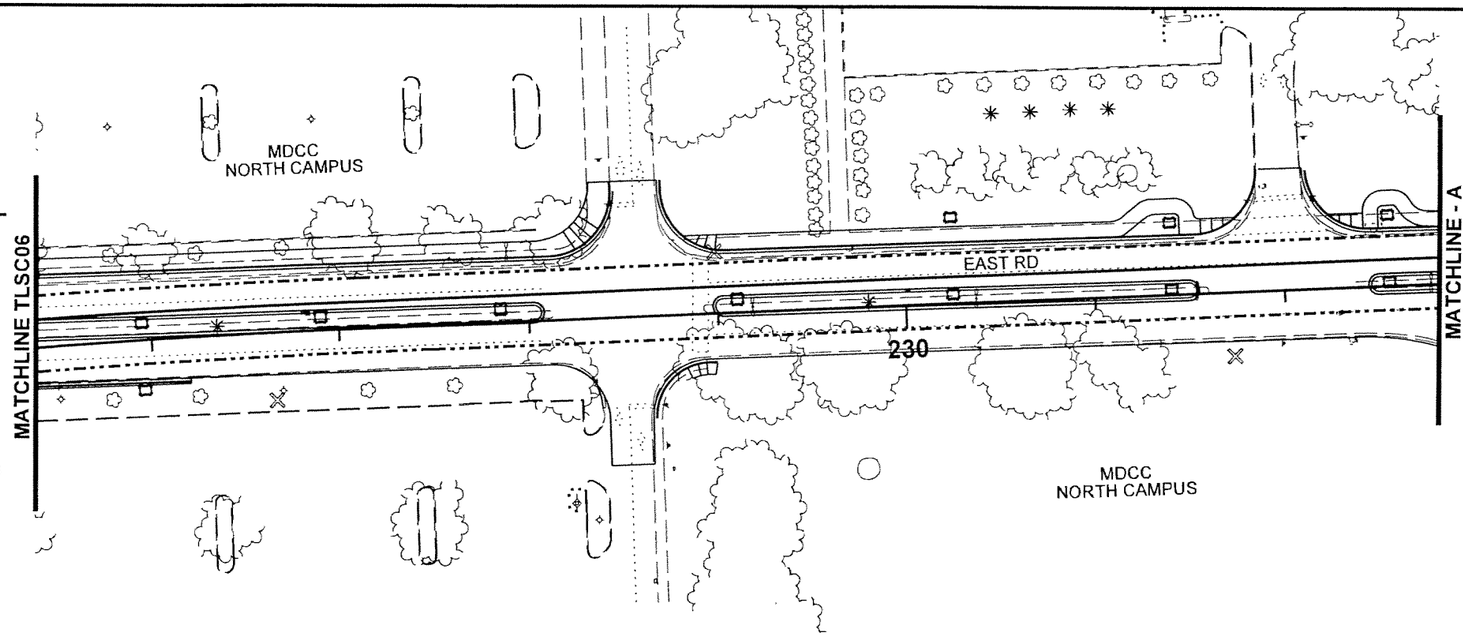

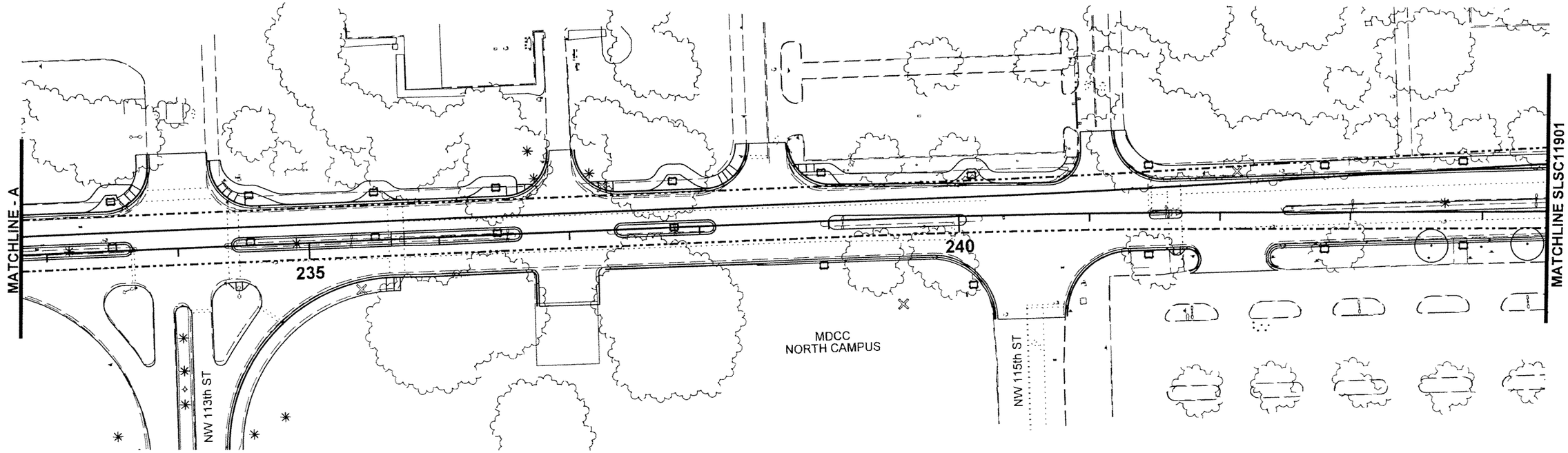

SUBJECT TO CHANGE

CAR/DWG 05-06 Designed by Date						
CAR 05-06 Drawn by Date						
DWG 05-06 Checked by Date						
Approved by Date	No.	Date	By Chk	App.	Revisions	

NORTH CORRIDOR METRORAIL EXTENSION - PRELIMINARY ENGINEERING (100% SUBMITTAL)

LANDSCAPE

MIAMI-DADE TRANSIT

PARSONS
7600 CORPORATE CENTER DRIVE, SUITE 500
MIAMI, FLORIDA 33126
PHONE: (786) 464-1000 FAX: (786) 845-7119
CERTIFICATE OF AUTHORIZATION NO. 1838

Approved Date

Approved Date

TRACKWAY LANDSCAPING

Scale 1" = 40' Drawing TLSC07 Sheet 15

5/10/2006 3:39:40 PM R:\646331 - North Corridor Metrorail\Landscape\Cadd\Contract\TLSC07.dgn

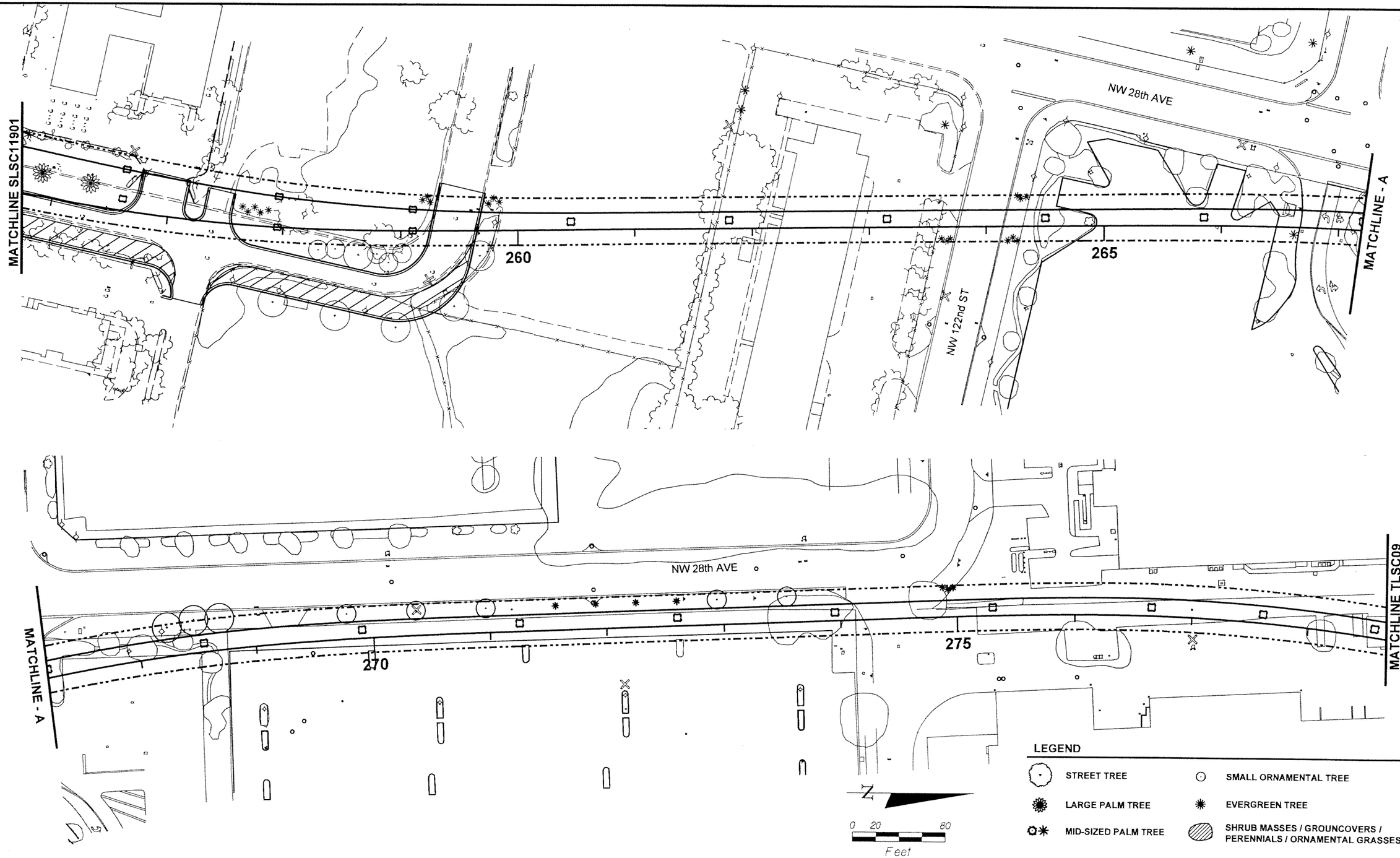

SUBJECT TO CHANGE

CAR/DWG Designed by	05-06 Date					
CAR Drawn by	05-06 Date					
DWG Checked by	05-06 Date					
Approved by	Date	No.	Date	By Chk	App.	Revisions

NORTH CORRIDOR METRORAIL EXTENSION - PRELIMINARY ENGINEERING (100% SUBMITTAL)

MIAMI-DADE COUNTY

MIAMI-DADE TRANSIT

PARSONS
7600 CORPORATE CENTER DRIVE, SUITE 500
MIAMI, FLORIDA 33126
PHONE: (786) 464-1000 FAX: (786) 845-7119
CERTIFICATE OF AUTHORIZATION NO. 1838

Approved | Date | Approved | Date

LANDSCAPE

TRACKWAY LANDSCAPING

Scale 1" = 40' | Drawing TLSC08 | Sheet 152

5/10/2006 3:42:32 PM R:\646331 - North Corridor Metrorail\Landscape\Cadd\Contract\TLSC08.dgn

N

0 20 80

Feet

LEGEND

- STREET TREE
- LARGE PALM TREE
- MID-SIZED PALM TREE
- SMALL ORNAMENTAL TREE
- EVERGREEN TREE
- SHRUB MASSES / GROUNCOVERS / PERENNIALS / ORNAMENTAL GRASSES

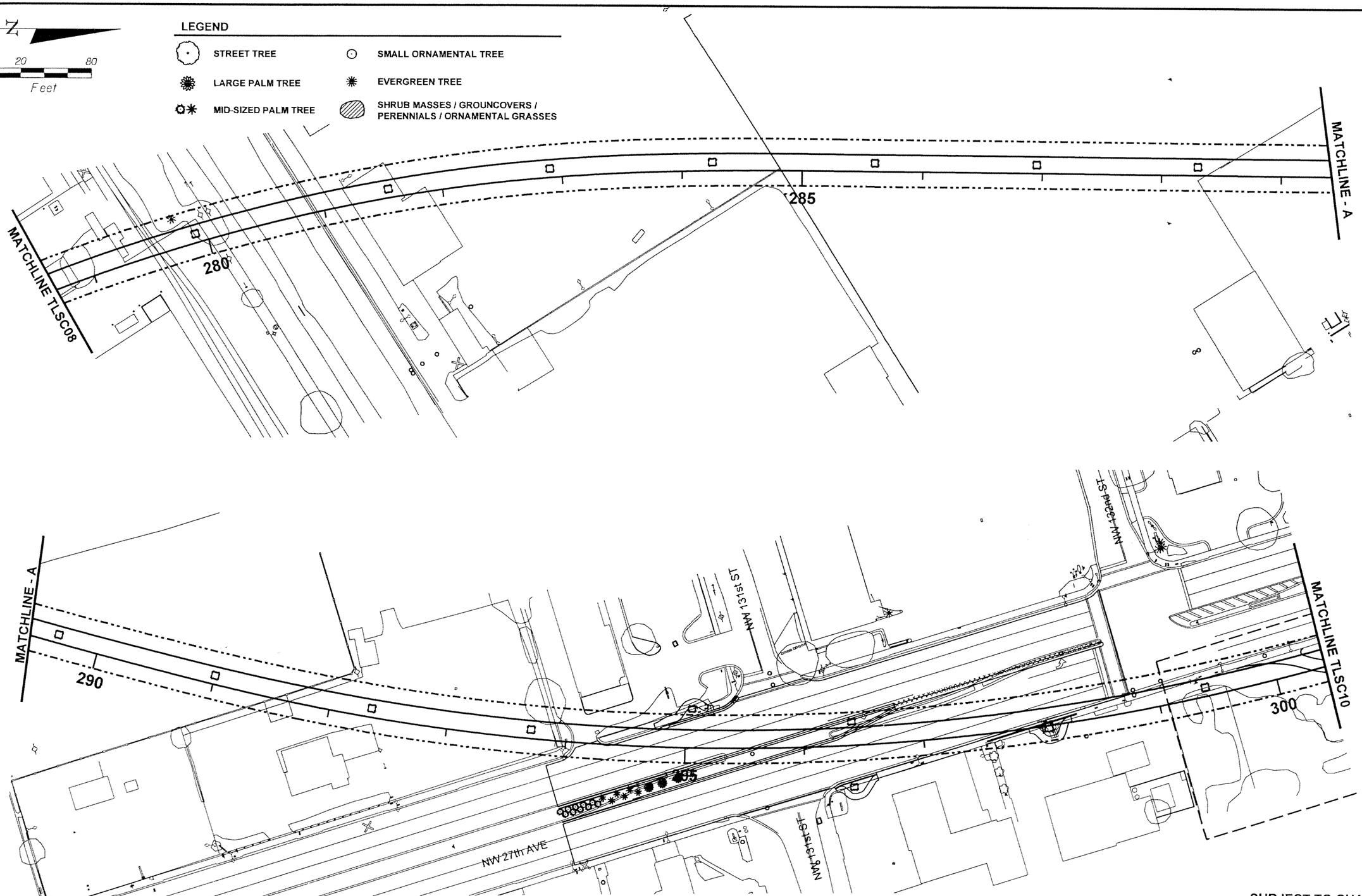

SUBJECT TO CHANGE

CAR/DWG 05-06 Designed by Date						
CAR 05-06 Drawn by Date						
DWG 05-06 Checked by Date						
Approved by Date	No.	Date	By Chk	App.	Revisions	

NORTH CORRIDOR METRORAIL EXTENSION - PRELIMINARY ENGINEERING (100% SUBMITTAL)

LANDSCAPE

MIAMI-DADE TRANSIT

PARSONS
7600 CORPORATE CENTER DRIVE, SUITE 500
MIAMI, FLORIDA 33126
PHONE: (786) 464-1000 FAX: (786) 845-7119
CERTIFICATE OF AUTHORIZATION NO. 1838

Approved Date

Approved Date

TRACKWAY LANDSCAPING

Scale 1" = 40' | Drawing TLSC09 | Sheet 153

5/10/2006 3:43:46 PM R:\646331 - North Corridor Metrorail\Landscape\Cadd\Contract\TLSC09.dgn

N

0 20 80
Feet

LEGEND

- STREET TREE
- LARGE PALM TREE
- MID-SIZED PALM TREE
- SMALL ORNAMENTAL TREE
- EVERGREEN TREE
- SHRUB MASSES / GROUNCOVERS / PERENNIALS / ORNAMENTAL GRASSES

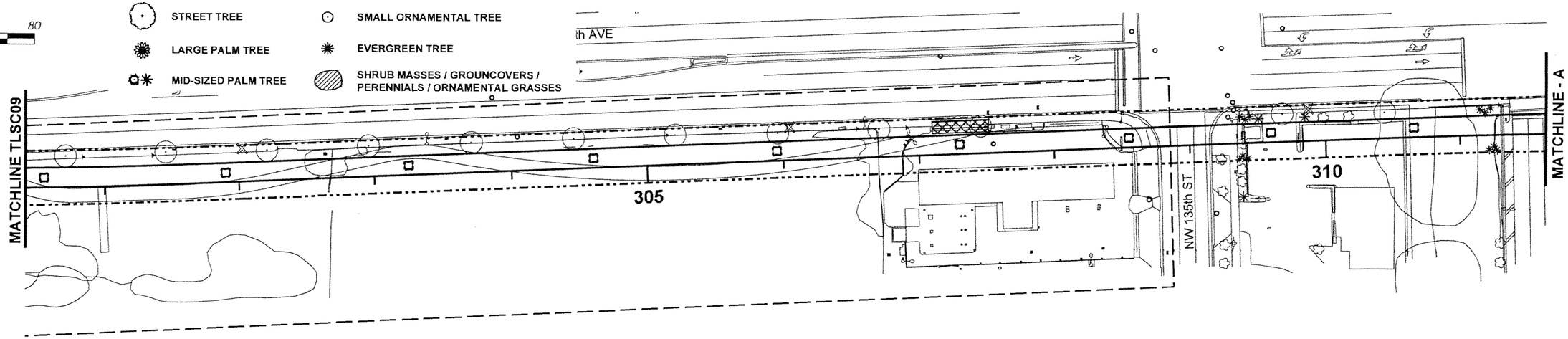

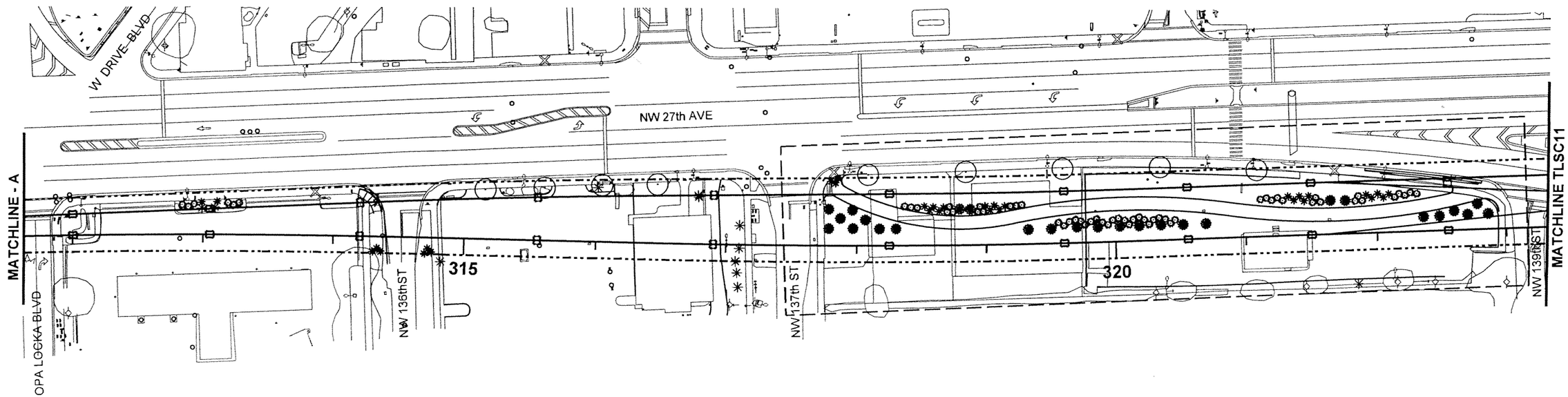

SUBJECT TO CHANGE

CAR/DWG Designed by	05-06 Date					
CAR Drawn by	05-06 Date					
DWG Checked by	05-06 Date					
Approved by	Date	No.	Date	By / Chk	App.	Revisions

NORTH CORRIDOR METRORAIL EXTENSION - PRELIMINARY ENGINEERING (100% SUBMITTAL)

LANDSCAPE

MIAMI-DADE COUNTY

MIAMI-DADE TRANSIT

PARSONS
7600 CORPORATE CENTER DRIVE, SUITE 500
MIAMI, FLORIDA 33126
PHONE: (786) 464-1000 FAX: (786) 845-7119
CERTIFICATE OF AUTHORIZATION NO. 1838

Approved | Date

Approved | Date

TRACKWAY LANDSCAPING

Scale 1" = 40' | Drawing TLSC10 | Sheet 54

5/10/2006 3:44:50 PM R:\646331 - North Corridor Metrorail\Landscape\Caddi\Contract\TLSC10.dgn

N

0 20 80

Feet

LEGEND

- STREET TREE
- LARGE PALM TREE
- MID-SIZED PALM TREE
- SMALL ORNAMENTAL TREE
- EVERGREEN TREE
- SHRUB MASSES / GROUNCOVERS / PERENNIALS / ORNAMENTAL GRASSES

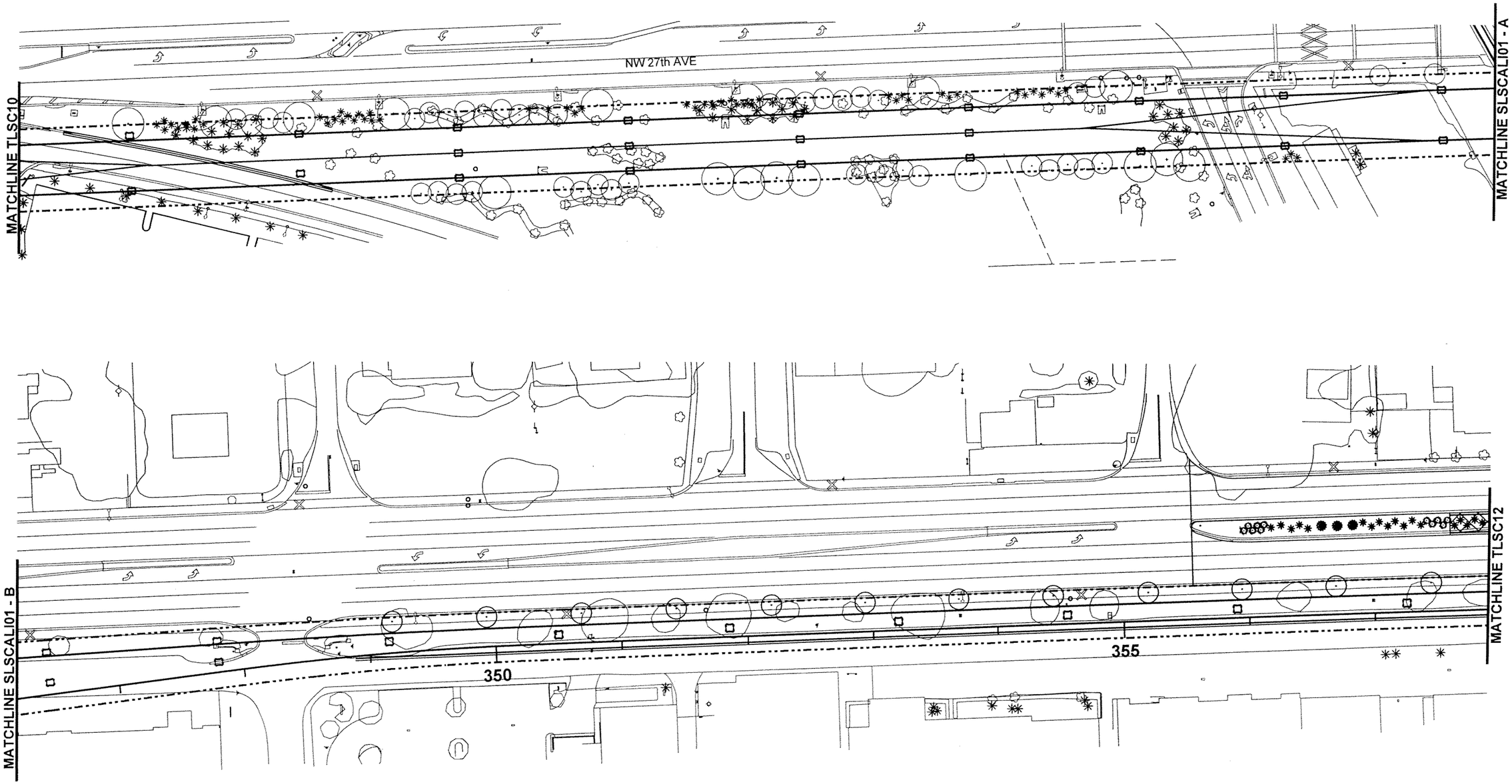

SUBJECT TO CHANGE

CAR/DWG Designed by	05-06 Date					
CAR Drawn by	05-06 Date					
DWG Checked by	05-06 Date					
Approved by	Date	No.	Date	By / Chk	App.	Revisions

NORTH CORRIDOR METRORAIL EXTENSION - PRELIMINARY ENGINEERING (100% SUBMITTAL)

LANDSCAPE

MIAMI-DADE COUNTY

MIAMI-DADE TRANSIT

PARSONS
7500 CORPORATE CENTER DRIVE, SUITE 500
MIAMI, FLORIDA 33126
PHONE: (786) 464-1000 FAX: (786) 845-7119
CERTIFICATE OF AUTHORIZATION NO. 1838

Approved | Date

Approved | Date

TRACKWAY LANDSCAPING

Scale 1" = 40' | Drawing TLSC11 | Sheet 156

5/10/2006 3:46:05 PM R:\646331 - North Corridor Metrorail\Landscape\Cadd\Contract\TLSC11.dgn

N

0 20 80

Feet

LEGEND

- STREET TREE
- LARGE PALM TREE
- MID-SIZED PALM TREE
- SMALL ORNAMENTAL TREE
- EVERGREEN TREE
- SHRUB MASSES / GROUNCOVERS / PERENNIALS / ORNAMENTAL GRASSES

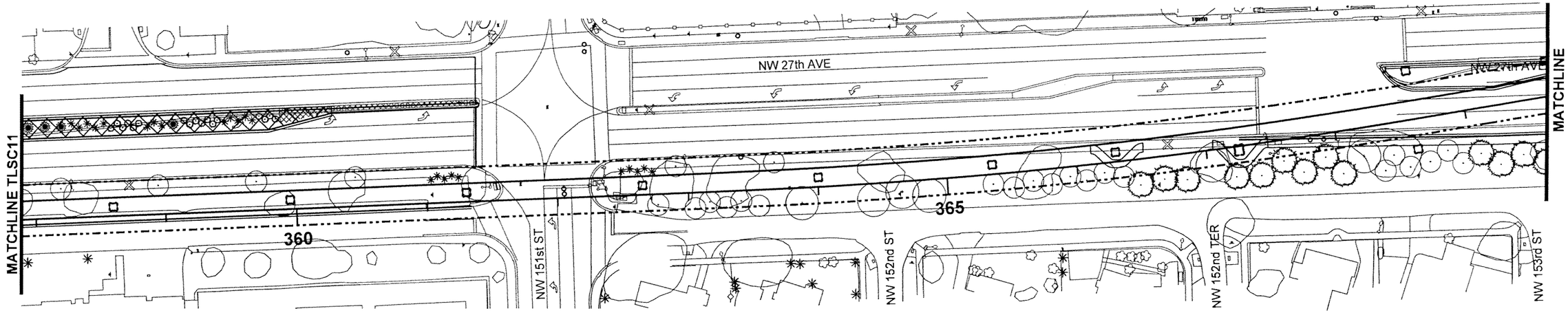

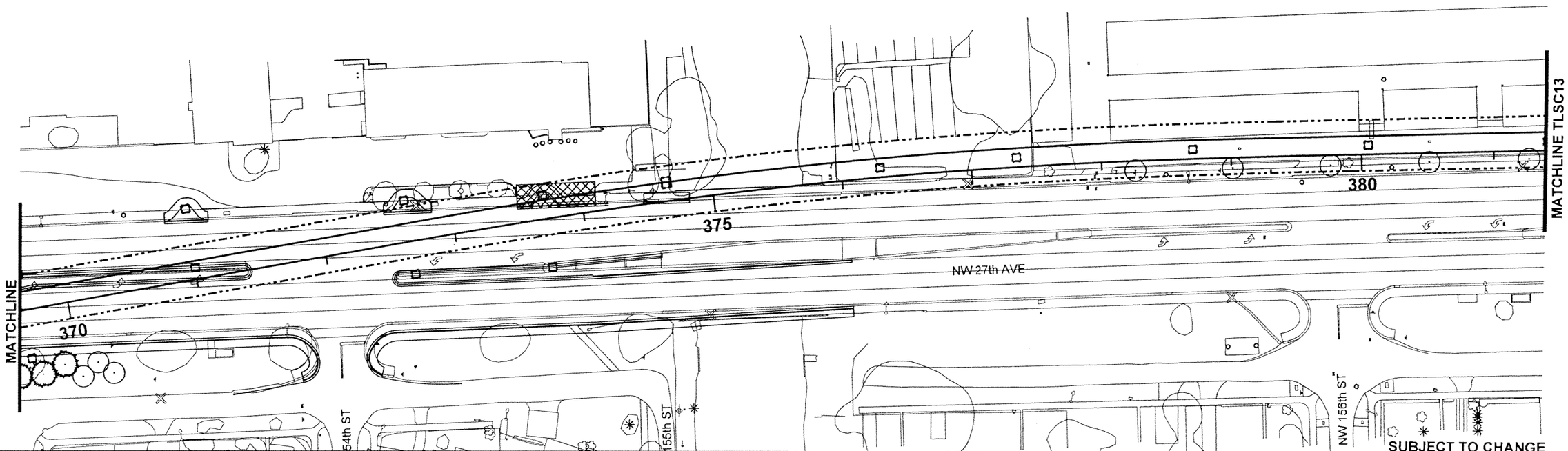

SUBJECT TO CHANGE

CAR/DWG Designed by	05-06 Date						
CAR Drawn by	05-06 Date						
DWG Checked by	05-06 Date						
Approved by	Date	No.	Date	By / Chk	App.	Revisions	

NORTH CORRIDOR METRORAIL EXTENSION - PRELIMINARY ENGINEERING (100% SUBMITTAL)

MIAMI-DADE TRANSIT

PARSONS
7500 CORPORATE CENTER DRIVE, SUITE 500
MIAMI, FLORIDA 33126
PHONE: (786) 464-1000 FAX: (786) 845-7119
CERTIFICATE OF AUTHORIZATION NO. 1838

Approved | Date | Approved | Date

LANDSCAPE

TRACKWAY LANDSCAPING

Scale 1" = 40' | Drawing TLSC12 | Sheet 156

5/10/2006 3:47:26 PM R:\646331 - North Corridor Metrorail\Landscape\Cadd\Contract\TLSC12.dgn

N

0 20 80
Feet

LEGEND

- STREET TREE
- SMALL ORNAMENTAL TREE
- LARGE PALM TREE
- EVERGREEN TREE
- MID-SIZED PALM TREE
- SHRUB MASSES / GROUNCOVERS / PERENNIALS / ORNAMENTAL GRASSES

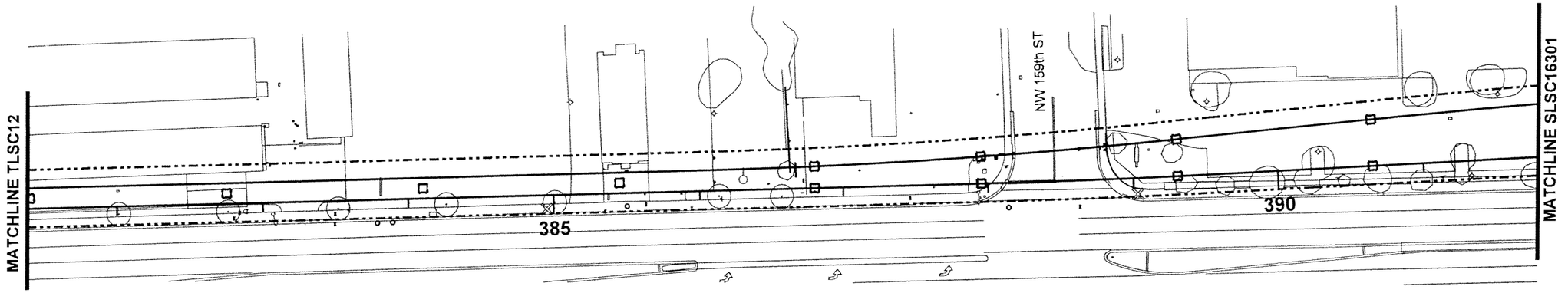

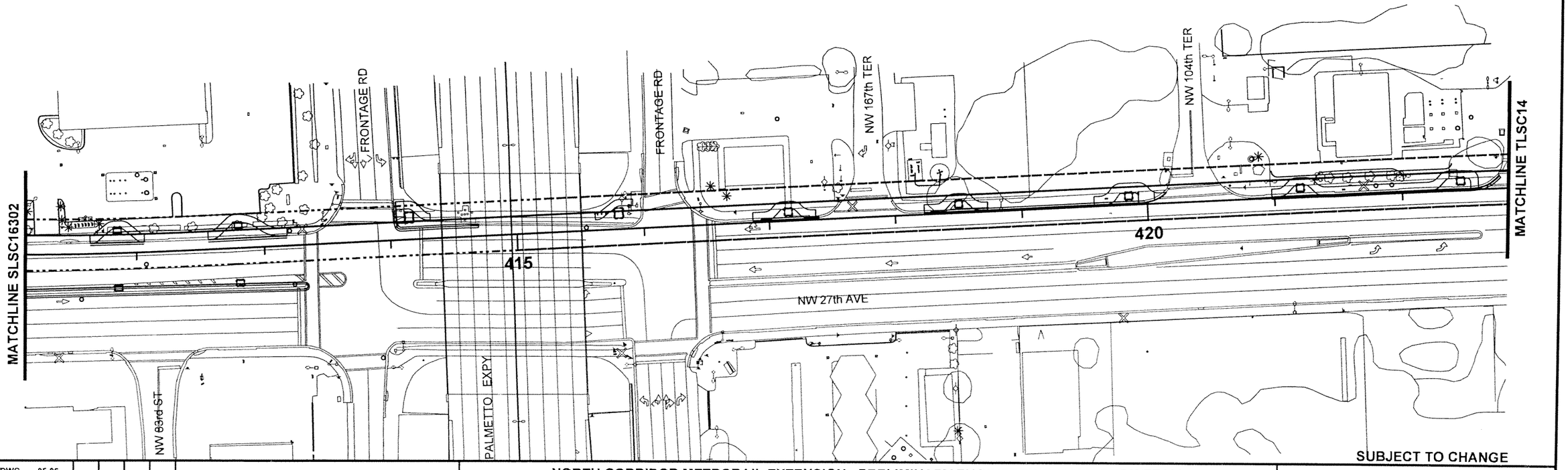

SUBJECT TO CHANGE

CAR/DWG Designed by	05-06 Date					
CAR Drawn by	05-06 Date					
DWG Checked by	05-06 Date					
Approved by	Date	No.	Date	By / Chk	App.	Revisions

NORTH CORRIDOR METRORAIL EXTENSION - PRELIMINARY ENGINEERING (100% SUBMITTAL)

LANDSCAPE

MIAMI-DADE TRANSIT

PARSONS
7500 CORPORATE CENTER DRIVE, SUITE 500
MIAMI, FLORIDA 33126
PHONE: (786) 464-1000 FAX: (786) 845-7119
CERTIFICATE OF AUTHORIZATION NO. 1636

Approved | Date | Approved | Date

TRACKWAY LANDSCAPING

Scale 1" = 40' | Drawing TLSC13 | Sheet 157

5/10/2006 3:48:22 PM R:\646331 - North Corridor Metrorail\Landscape\Cadd\Contract\TLSC13.dgn

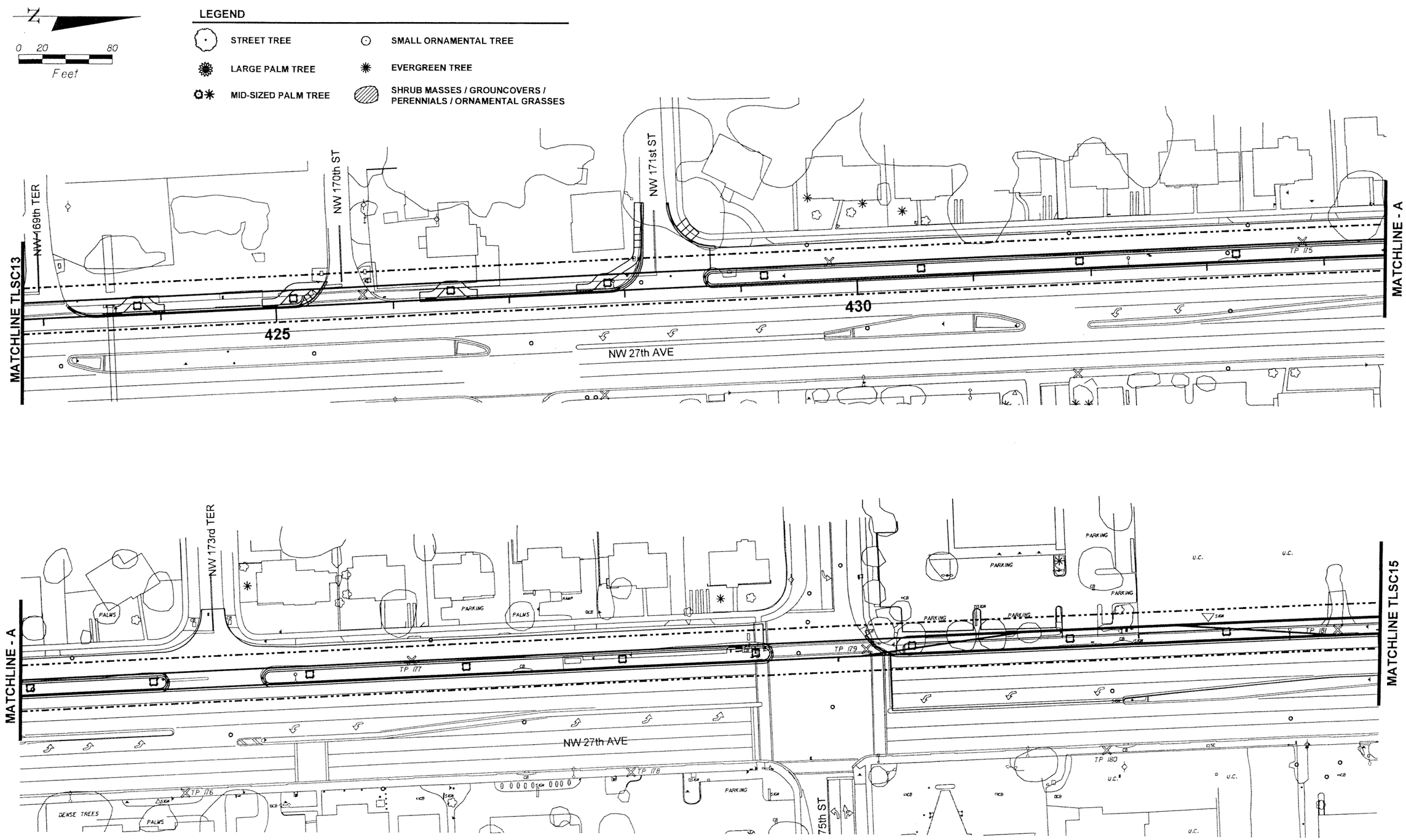

SUBJECT TO CHANGE

CAR/DWG Designed by	05-06 Date					
CAR Drawn by	05-06 Date					
DWG Checked by	05-06 Date					
Approved by	Date	No.	Date	By / Chk	App.	Revisions

NORTH CORRIDOR METRORAIL EXTENSION - PRELIMINARY ENGINEERING (100% SUBMITTAL)

MIAMI-DADE COUNTY

MIAMI-DADE TRANSIT

PARSONS
7600 CORPORATE CENTER DRIVE, SUITE 500
MIAMI, FLORIDA 33126
PHONE: (786) 464-1000 FAX: (786) 845-7119
CERTIFICATE OF AUTHORIZATION NO. 1838

Approved | Date | Approved | Date

LANDSCAPE

TRACKWAY LANDSCAPING

Scale 1" = 40' | Drawing TLSC14 | Sheet 158

5/10/2006 3:50:00 PM R:\646331 - North Corridor Metrorail\Landscape\Cadd\Contract\TLSC14.dgn

0 20 80
Feet

LEGEND

- STREET TREE
- LARGE PALM TREE
- MID-SIZED PALM TREE
- SMALL ORNAMENTAL TREE
- EVERGREEN TREE
- SHRUB MASSES / GROUNCOVERS / PERENNIALS / ORNAMENTAL GRASSES

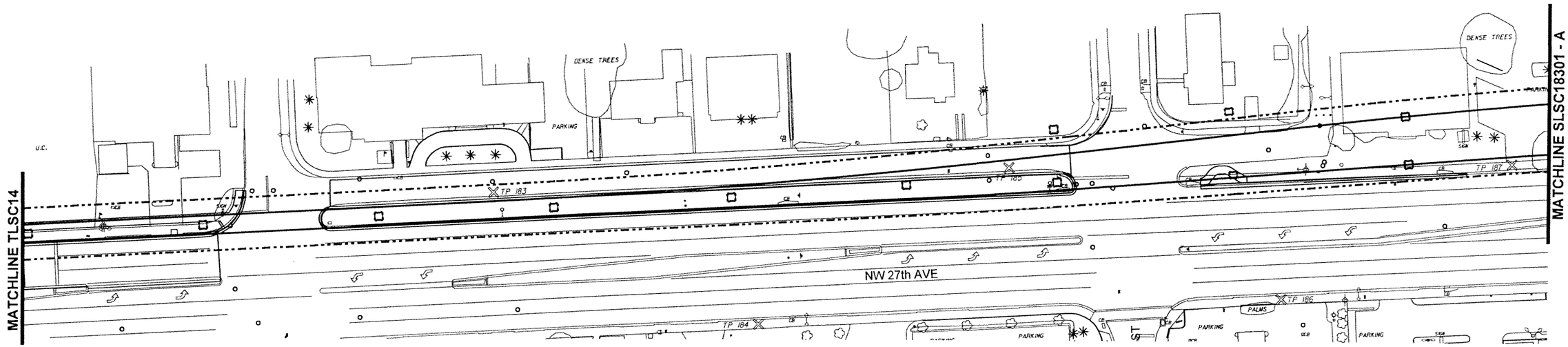

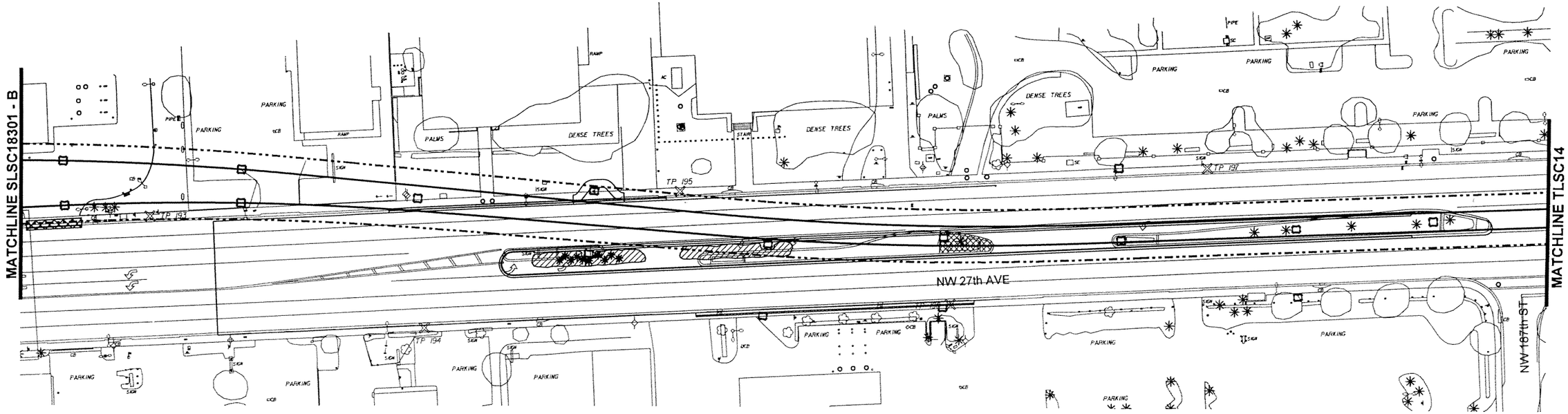

SUBJECT TO CHANGE

CAR/DWG	05-06					
Designed by	Date					
CAR	05-06					
Drawn by	Date					
DWG	05-06					
Checked by	Date					
Approved by	Date	No.	Date	By / Chk	App.	Revisions

NORTH CORRIDOR METRORAIL EXTENSION - PRELIMINARY ENGINEERING (100% SUBMITTAL)

LANDSCAPE

MIAMI-DADE COUNTY

MIAMI-DADE TRANSIT

PARSONS
7600 CORPORATE CENTER DRIVE, SUITE 500
MIAMI, FLORIDA 33126
PHONE: (786) 464-1000 FAX: (786) 845-7119
CERTIFICATE OF AUTHORIZATION NO. 1836

Approved	Date	Approved	Date

TRACKWAY LANDSCAPING

Scale	Drawing	Sheet
1" = 40'	TLSC15	159

5/10/2006 3:51:10 PM R:\646331 - North Corridor Metrorail\Landscape\Cadd\Contract\TLSC15.dgn

N

0 20 80

Feet

LEGEND

- STREET TREE
- LARGE PALM TREE
- MID-SIZED PALM TREE
- SMALL ORNAMENTAL TREE
- EVERGREEN TREE
- SHRUB MASSES / GROUNCOVERS / PERENNIALS / ORNAMENTAL GRASSES

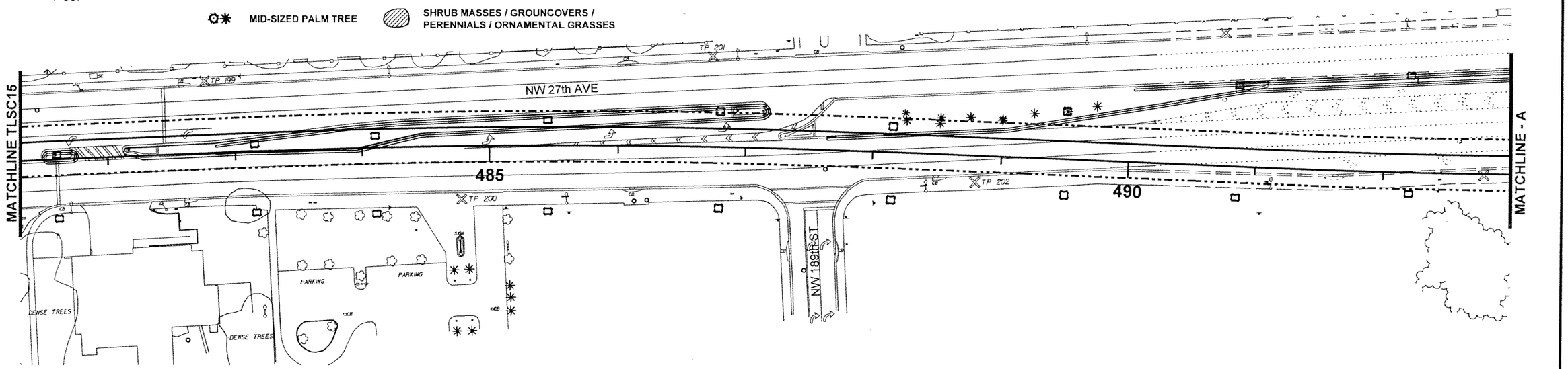

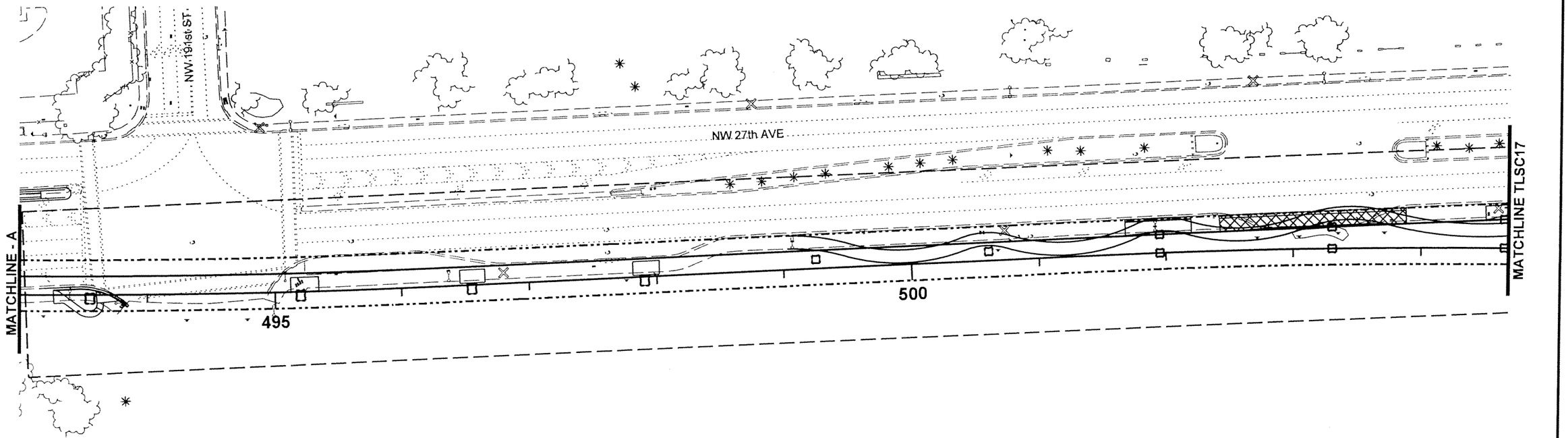

SUBJECT TO CHANGE

CAR/DWG 05-06 Designed by Date						
CAR 05-06 Drawn by Date						
DWG 05-06 Checked by Date						
Approved by Date	No.	Date	By Chk	App.	Revisions	

NORTH CORRIDOR METRORAIL EXTENSION - PRELIMINARY ENGINEERING (100% SUBMITTAL)

LANDSCAPE

MIAMI-DADE TRANSIT

PARSONS
7600 CORPORATE CENTER DRIVE, SUITE 500
MIAMI, FLORIDA 33126
PHONE: (786) 464-1000 FAX: (786) 845-7119
CERTIFICATE OF AUTHORIZATION NO. 1838

TRACKWAY LANDSCAPING

Approved	Date	Approved	Date	Scale	Drawing	Sheet
				1" = 40'	TLSC16	160

5/10/2006 3:52:02 PM R:\646331 - North Corridor Metrorail\Landscape\Cadd\Contract\TLSC16.dgn

N

0 20 80
Feet

LEGEND

- STREET TREE
- SMALL ORNAMENTAL TREE
- LARGE PALM TREE
- EVERGREEN TREE
- MID-SIZED PALM TREE
- SHRUB MASSES / GROUNCOVERS / PERENNIALS / ORNAMENTAL GRASSES

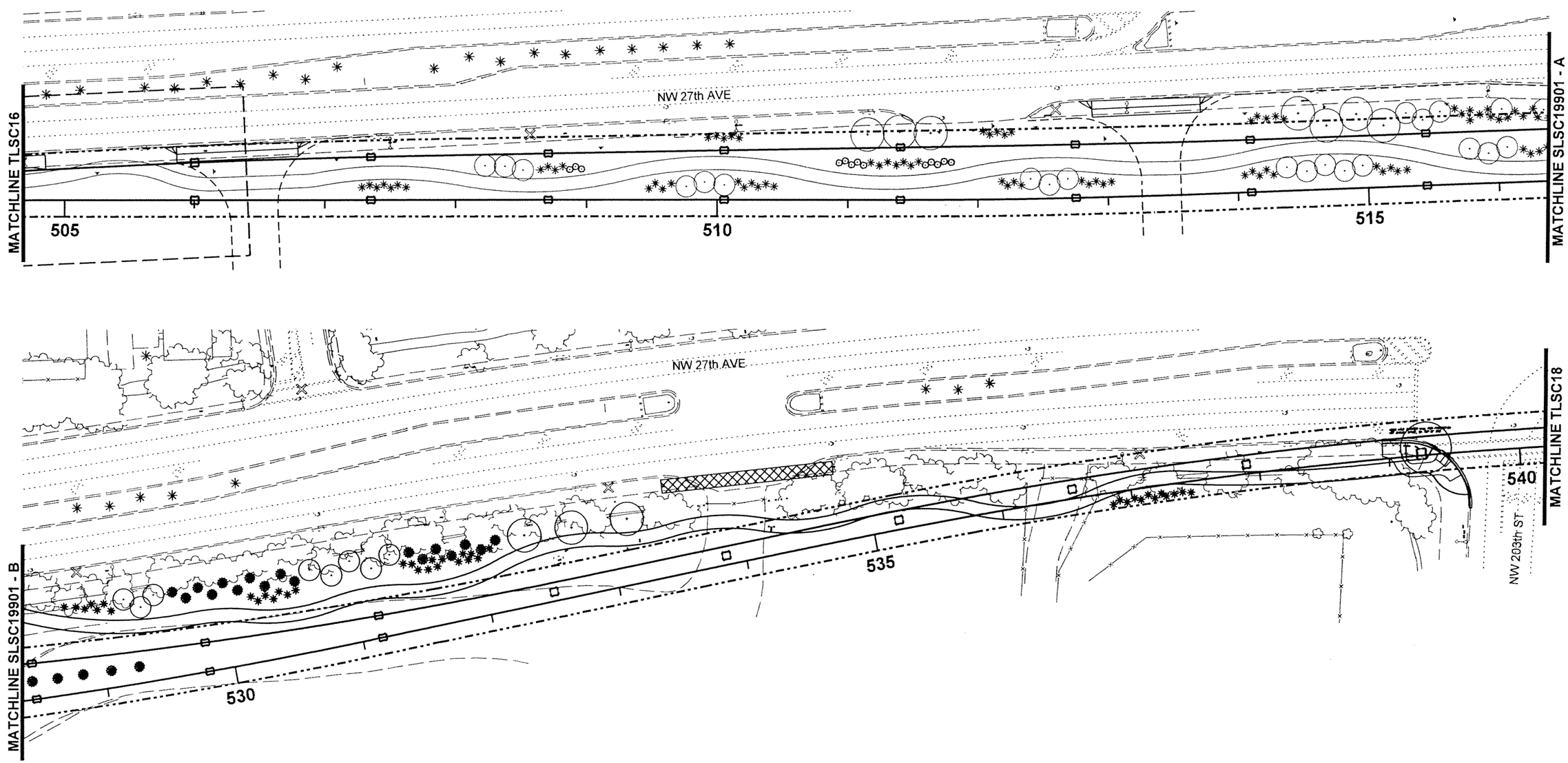

SUBJECT TO CHANGE

CAR/DWG Designed by 05-06 Date						NORTH CORRIDOR METRORAIL EXTENSION - PRELIMINARY ENGINEERING (100% SUBMITTAL)		LANDSCAPE
CAR Drawn by 05-06 Date						MIAMI-DADE COUNTY MIAMI-DADE TRANSIT	PARSONS 7600 CORPORATE CENTER DRIVE, SUITE 500 MIAMI, FLORIDA 33126 PHONE: (786) 464-1000 FAX: (786) 845-7119 CERTIFICATE OF AUTHORIZATION NO. 1838	TRACKWAY LANDSCAPING
DWG Checked by 05-06 Date								
Approved by Date	No.	Date	By / Chk	App.	Revisions	Approved / Date	Approved / Date	Scale 1" = 40' / Drawing TLSC17 / Sheet 16

5/10/2006 3:53:06 PM R:\646331 - North Corridor Metrorail\Landscape\Cadd\Contract\TLSC17.dgn

N

0 20 80
Feet

LEGEND

- STREET TREE
- SMALL ORNAMENTAL TREE
- LARGE PALM TREE
- EVERGREEN TREE
- MID-SIZED PALM TREE
- SHRUB MASSES / GROUNCOVERS / PERENNIALS / ORNAMENTAL GRASSES

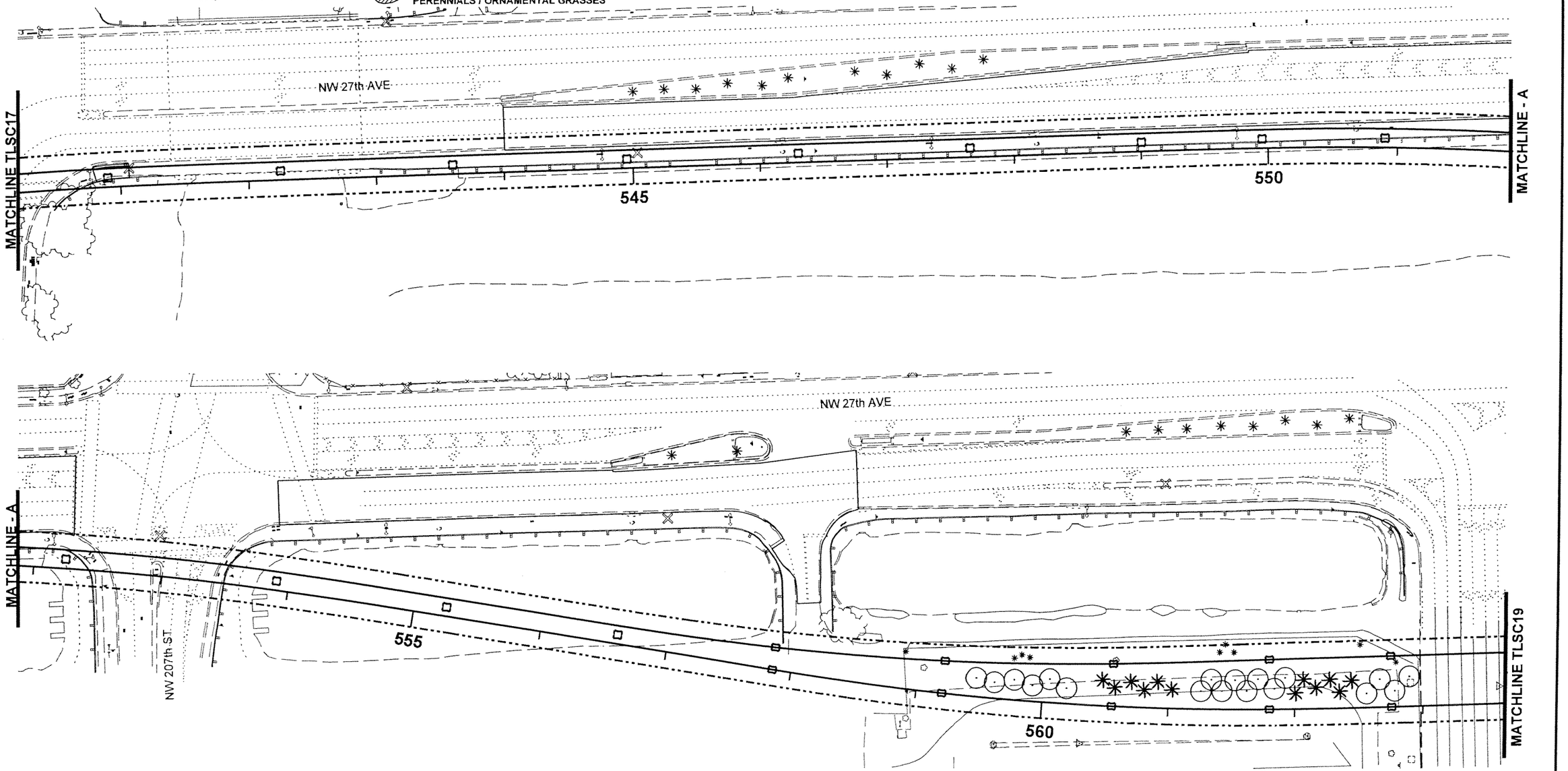

SUBJECT TO CHANGE

CAR/DWG 05-06 Designed by Date						NORTH CORRIDOR METRORAIL EXTENSION - PRELIMINARY ENGINEERING (100% SUBMITTAL)	LANDSCAPE
CAR 05-06 Drawn by Date						MIAMI-DADE TRANSIT	TRACKWAY LANDSCAPING
DWG 05-06 Checked by Date						PARSONS 7600 CORPORATE CENTER DRIVE, SUITE 500 MIAMI, FLORIDA 33126 PHONE: (786) 464-1000 FAX: (786) 845-7119 CERTIFICATE OF AUTHORIZATION NO. 1638	
Approved by Date	No.	Date	By / Chk	App.	Revisions	Approved / Date	Approved / Date
							Scale 1" = 40' Drawing TLSC18 Sheet 162

5/10/2006 3:54:11 PM R:\646331 - North Corridor Metrorail\Landscape\Cadd\Contract\TLSC18.dgn

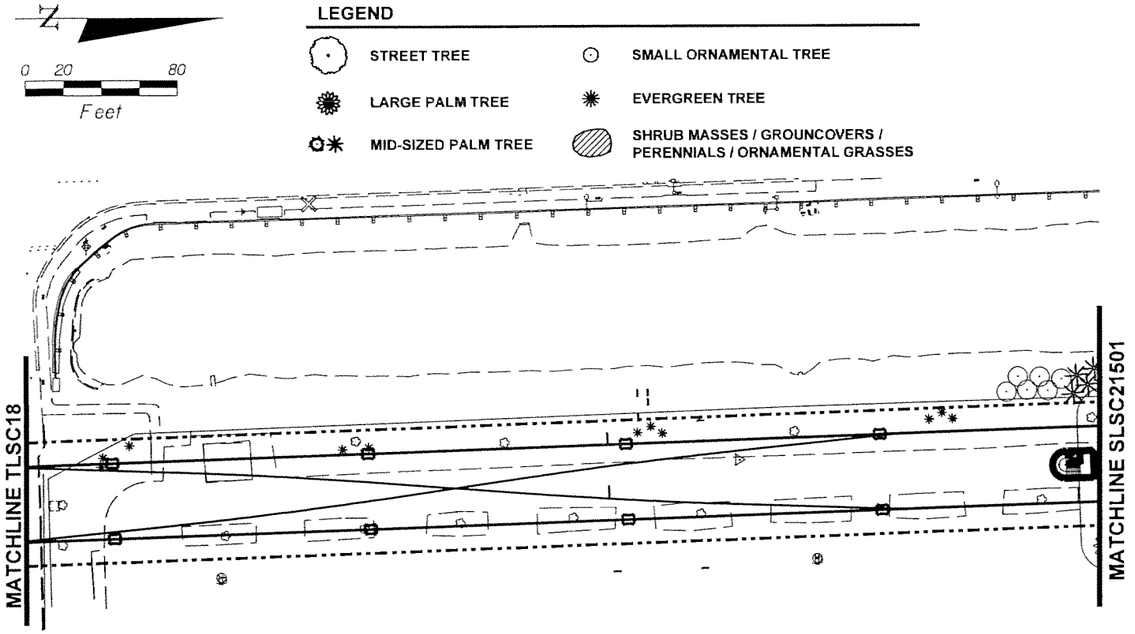

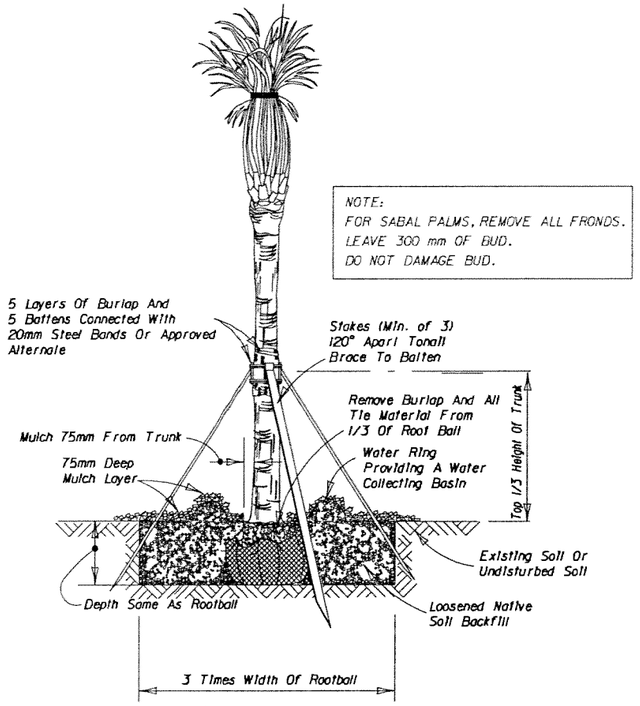

PALM PLANTING
NO SLOPES

GENERAL LANDSCAPE NOTES:

1. NO SUBSTITUTES ON VARIETIES LISTED WILL BE ALLOWED UNLESS PREVIOUSLY APPROVED BY THE PROJECT ENGINEER.
2. PLANTS SHALL BE WATERED AS NECESSARY OR WITHIN 24 HOURS AFTER NOTIFICATION BY THE ENGINEER.
3. PLANT LOCATIONS MAY BE ADJUSTED IN THE FIELD AT THE TIME OF CONSTRUCTION BY THE ENGINEER DUE TO UNFORSEEN ON-SITE CONDITIONS.
4. TREE PLANTINGS MUST SATISFY THE HORIZONTAL CLEARANCE REQUIREMENTS OF CRITERIA IN THE FDOT ROADWAY PLANS PREPARATION MANUAL.
5. TREES AND SHRUBS WITHIN THE LIMITS OF CLEAR-SIGHT AT INTERSECTIONS. MUST MEET THE CRITERIA OF FDOT STANDARD INDEX NO. 546.
6. TREES MUST BE OFFSET A MINIMUM OF 1.8 m FROM THE EDGE OF THE INSIDE THROUGH LANE TO MEET FDOT REQUIREMENTS.
7. HEALTHY EXISTING TREES, NOT DISTURBED OR REMOVED BY CONSTRUCTION SHALL BE PRESERVED AND INCORPORATED INTO THE NEW PLANTINGS IN THE FIELD BY THE ENGINEER/ CONTRACTOR AS SHOWN ON PLANS. UNHEALTHY EXISTING VEGETATION WILL BE REMOVED..
8. BOTTOM TREE LIMBS SHALL BE TRIMMED TO A MINIMUM HEIGHT OF 2.56 m ABOVE THE ADJACENT PAVEMENT.
9. LIVE OAK IS FULL SPECIMEN MATCHED FORM FOR STREET TREE USE
10. CONTRACTOR SHALL COORDINATE INSTALLATION OF PLANT MATERIAL WITH THE APPROPRIATE UTILITY COMPANY SO AS NOT TO DISTURB ANY UNDERGROUND OR OVERHEAD UTILITIES.
11. CONTRACTOR SHALL NOTIFY THE PROPER UTILITY COMPANY(S) 48 HOURS PRIOR TO BEGINNING WORK. ALL PLANT BEDS SHALL RECEIVE MIN. 75 MM DEEP, MALALUCA MULCH - REFER TO PLANTING DETAILS.

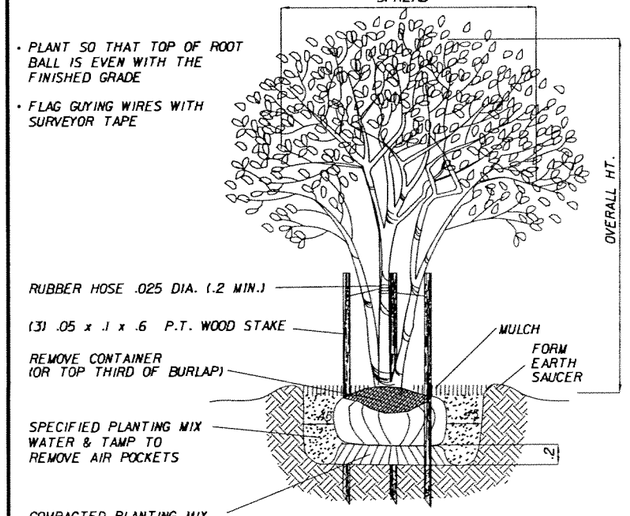

TREE PLANTING DETAIL
NOT TO SCALE

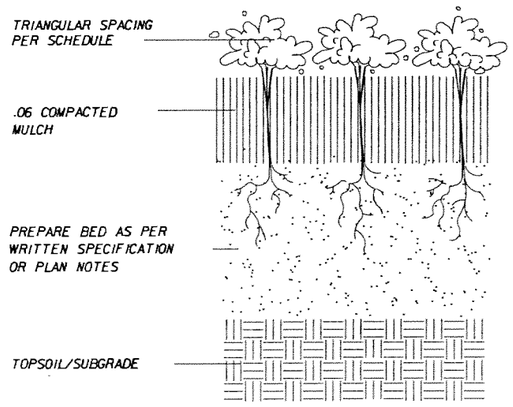

GROUNDCOVER PLANTING DETAIL
NOT TO SCALE

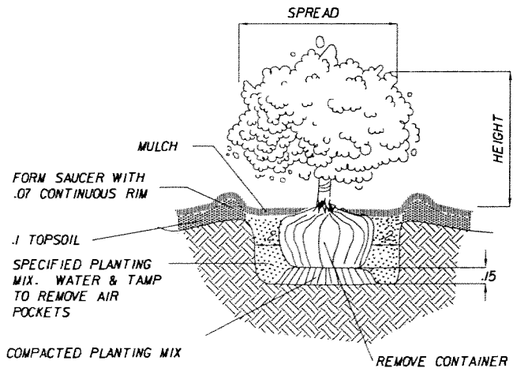

SHRUB PLANTING
NOT TO SCALE

PREFERRED XERISCAPE PLANT LIST

STREET TREES		EVERGREEN TREES	
Bursera simaruba	GUMO-LIMBO	Pinus elliottii var. densa	SLASH PINE
Quercus laurifolia	LAUREL OAK		
Quercus virginiana	LIVE OAK	SHRUBS	
Swietenia Mahogani	MAHOGANY	Bougainvillea glabra	BOUGAINVILLEA
		Callicarpa Americana	BEAUTYBERRY
SMALL ORNAMENTAL TREES		Carissa macrocarpa	NATAL PLUM
Acacia farnesiana	SWEET ACACIA	Chrysobalanus icaco	GREEN COCOPLUM
Bauhinia x blakeana	HONG KONG ORCHID TREE	Codaeum variegatum	CROTON
Clusia rosea	PITCH APPLE	Crinum asiaticum	CRINUM LILY
Coccoloba diversifolia	PIGEON PLUM	Ilex glabra	GALLBERRY
Coccoloba uvifera	SEA-GRAPE	Ilex vomitoria	YAUPON HOLLY
Conocarpus erectus	SILVER BUTTONWOOD	Itea virginica	VIRGINIA SWEETSPIRE
Cordia sebestena	GEIGER TREE	Ixora coccinea	RED IXORA
Lagerstroemia indica	CRAPE-MYRTLE	Ligustrum japonicum	JAPANESE PRIVET
Myrica cerifera	WAX MYRTLE	Nerium oleander	OLEANDER
Tabebuia caraiba	SILVER TRUMPET TREE		
		ORNAMENTAL GRASSES	
LARGE PALM TREES		Cortaderia selloana	PAMPAS GRASS
Cocos nucifera	COCONUT PALM (RESISTANT VARIETIES)	Pennisetum setaceum	FOUNTAIN GRASS
Phoenix canariensis	CANARY ISLAND DATE PALM		
Phoenix reclinata	SENEGAL DATE PALM		
		GROUNDCOVERS / PERENNIALS	
MID-SIZED PALM TREES		Hemerocallis hybrids	DAYLILY
Beaucarnea recurvata	PONYTAIL PALM	Juniperus chinensis 3/32 Parsonii 5/32	PARSON'S JUNIPER
Coccothrinax argentata	SILVER PALM	Liriope spp	LILY TURF
Serenoa repens	SAW PALMETTO (SHRUB FORM)		
Thrinax radiata	FLORIDA THATCH PALM		
Sabal Palmetto	CABBAGE / SABAL PALM		

SUBJECT TO CHANGE

CAR/DWG	05-06						
Designed by	Date						
CAR	05-06						
Drawn by	Date						
DWG	05-06						
Checked by	Date						
Approved by	Date	No.	Date	By / Chk	App.	Revisions	

NORTH CORRIDOR METRORAIL EXTENSION - PRELIMINARY ENGINEERING (100% SUBMITTAL)

LANDSCAPE

MIAMI-DADE TRANSIT

PARSONS
7600 CORPORATE CENTER DRIVE, SUITE 500
MIAMI, FLORIDA 33126
PHONE: (786) 464-1000 FAX: (786) 845-7119
CERTIFICATE OF AUTHORIZATION NO. 1836

Approved | Date | Approved | Date

TRACKWAY LANDSCAPING AND DETAILS

Scale 1" = 40' | Drawing TLSC19 | Sheet 163

5/10/2006 3:33:41 PM R:\646331 - North Corridor Metrorail\Landscape\Caddi\Contract\TLSC19.dgn

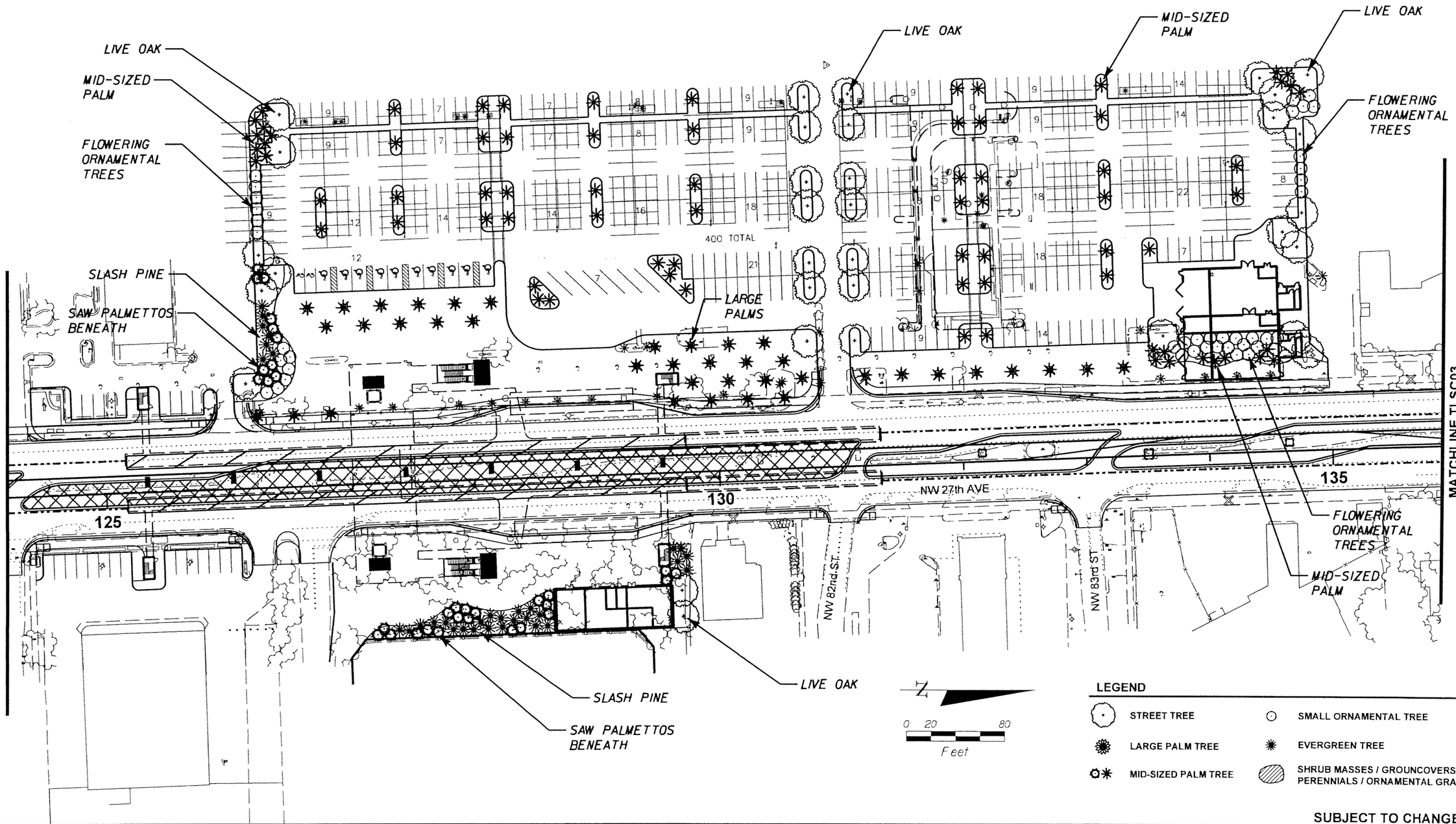

SUBJECT TO CHANGE

CAR/DWG Designed by	05-06 Date				
CAR Drawn by	05-06 Date				
DWG Checked by	05-06 Date				
Approved by	Date	No.	Date	By / Chk	App.	Revisions

NORTH CORRIDOR METRORAIL EXTENSION - PRELIMINARY ENGINEERING (100% SUBMITTAL)

LANDSCAPE

MIAMI-DADE COUNTY

MIAMI-DADE TRANSIT

PARSONS
7600 CORPORATE CENTER DRIVE, SUITE 500
MIAMI, FLORIDA 33126
PHONE: (786) 454-1000 FAX: (786) 845-7119
CERTIFICATE OF AUTHORIZATION NO. 1838

Approved	Date	Approved	Date

82 ND STREET STATION LANDSCAPING

Scale	Drawing	Sheet
1" = 40'	SLSC8201	164

5/10/2006 3:57:26 PM R:\646331 - North Corridor Metrorail\Landscape\Cadd\Contract\SLSC8201.dgn

MDCC
NORTH CAMPUS

LARGE PALMS

SHRUB MASS

SMALL ORNAMENTAL TREES

NW 119th S.T.

MATCHLINE TLSC07

MATCHLINE TLSC08

FUTURE PLATFORM EXTENSION

STREET TREE

LARGE PALMS IN TREE GRATES

SHRUB MASS

500' TOTAL

PLANTER OR SHRUB MASS WITH LARGE PALM

SAW PALMETTOS BENEATH

SLASH PINE

SHADE TREE

LARGE PALMS

MID-SIZED PALM

MID-SIZED PALM

LAWN, TYP.

GATEWAY FEATURE

GROUNDCOVER

SAW PALMETTOS BENEATH

SLASH PINE

NW 27th AVE

N

0 20 80

Feet

LEGEND

- STREET TREE
- LARGE PALM TREE
- MID-SIZED PALM TREE
- SMALL ORNAMENTAL TREE
- EVERGREEN TREE
- SHRUB MASSES / GROUNCOVERS / PERENNIALS / ORNAMENTAL GRASSES

SUBJECT TO CHANGE

CAR/DWG	05-06					
Designed by	Date					
CAR	05-06					
Drawn by	Date					
DWG	05-06					
Checked by	Date					
Approved by	Date	No.	Date	By / Chk	App.	Revisions

NORTH CORRIDOR METRORAIL EXTENSION - PRELIMINARY ENGINEERING (100% SUBMITTAL)

MIAMI-DADE TRANSIT

PARSONS
7600 CORPORATE CENTER DRIVE, SUITE 500
MIAMI, FLORIDA 33126
PHONE: (786) 464-1000 FAX: (786) 845-7119
CERTIFICATE OF AUTHORIZATION NO. 1838

Approved | Date | Approved | Date

LANDSCAPE

119 TH STREET
STATION LANDSCAPING

Scale 1" = 40' | Drawing SLSC11901 | Sheet 165

5/10/2006 4:07:17 PM R:\646331 - North Corridor Metrorail\Landscape\Cadd\Contract\SLSC11901.dgn

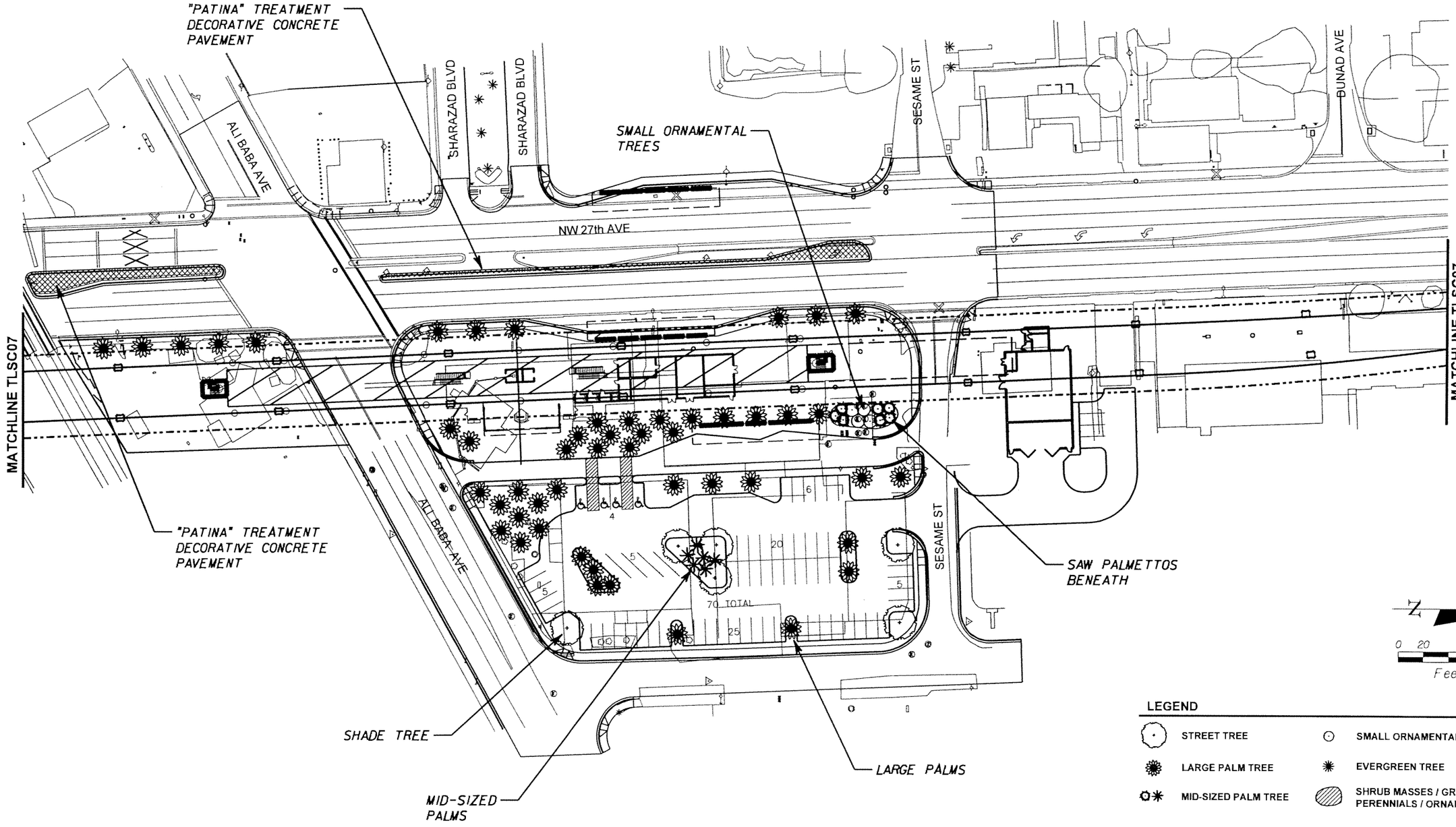

N

0 20 80

Feet

LEGEND

- STREET TREE
- SMALL ORNAMENTAL TREE
- LARGE PALM TREE
- EVERGREEN TREE
- MID-SIZED PALM TREE
- SHRUB MASSES / GROUNCOVERS / PERENNIALS / ORNAMENTAL GRASSES

SUBJECT TO CHANGE

CAR/DWG Designed by	05-06 Date					
CAR Drawn by	05-06 Date					
DWG Checked by	05-06 Date					
Approved by	Date	No.	Date	By / Chk	App.	Revisions

NORTH CORRIDOR METRORAIL EXTENSION - PRELIMINARY ENGINEERING (100% SUBMITTAL)

MIAMI-DADE TRANSIT

PARSONS
7600 CORPORATE CENTER DRIVE, SUITE 500
MIAMI, FLORIDA 33126
PHONE: (786) 464-1000 FAX: (786) 845-7119
CERTIFICATE OF AUTHORIZATION NO. 1836

Approved Date

Approved Date

LANDSCAPE

143 RD STREET (ALI-BABA) STATION LANDSCAPING

Scale 1" = 40' | Drawing SLSCALI01 | Sheet 66

5/10/2006 3:55:34 PM R:\646331 - North Corridor Metrorail\Landscape\Cadd\Contract\SLSCALI01.dgn

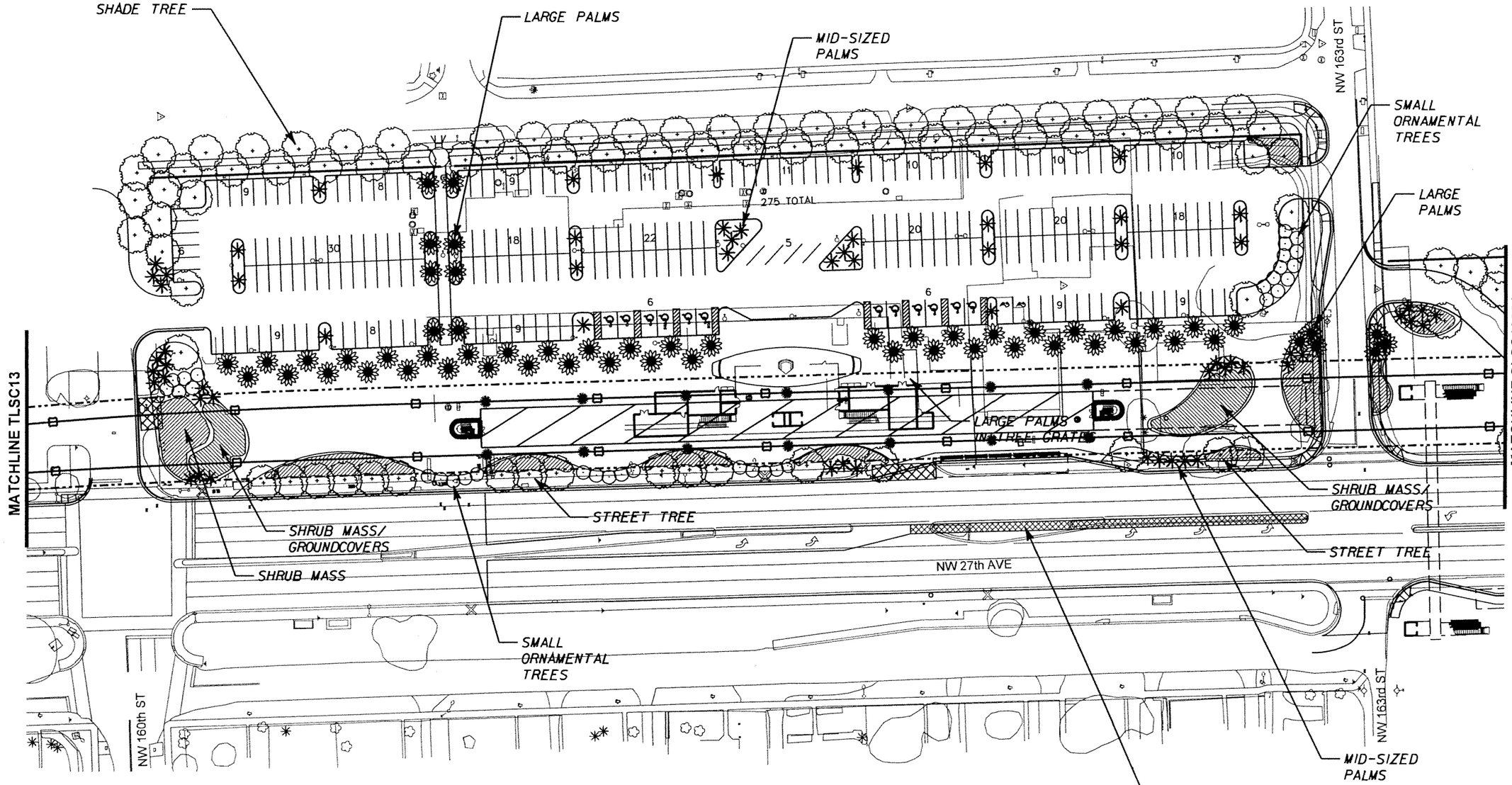

N

0 20 80

Feet

LEGEND

- STREET TREE
- SMALL ORNAMENTAL TREE
- LARGE PALM TREE
- EVERGREEN TREE
- MID-SIZED PALM TREE
- SHRUB MASSES / GROUNCOVERS / PERENNIALS / ORNAMENTAL GRASSES

SUBJECT TO CHANGE

CAR/DWG Designed by	05-06 Date						
CAR Drawn by	05-06 Date						
DWG Checked by	05-06 Date						
Approved by	Date	No.	Date	By / Chk	App.	Revisions	

NORTH CORRIDOR METRORAIL EXTENSION - PRELIMINARY ENGINEERING (100% SUBMITTAL)

LANDSCAPE

MIAMI-DADE TRANSIT

PARSONS
7600 CORPORATE CENTER DRIVE, SUITE 500
MIAMI, FLORIDA 33126
PHONE: (786) 464-1000 FAX: (786) 845-7119
CERTIFICATE OF AUTHORIZATION NO. 1838

Approved | Date | Approved | Date

163 RD STREET STATION LANDSCAPING

Scale 1" = 40' | Drawing SLSC16301 | Sheet 16

5/10/2006 4:09:12 PM R:\646331 - North Corridor Metrorail\Landscape\Cadd\Contract\SLSC16301.dgn

0 20 80
Feet

LEGEND

- STREET TREE
- LARGE PALM TREE
- MID-SIZED PALM TREE
- SMALL ORNAMENTAL TREE
- EVERGREEN TREE
- SHRUB MASSES / GROUNCOVERS / PERENNIALS / ORNAMENTAL GRASSES

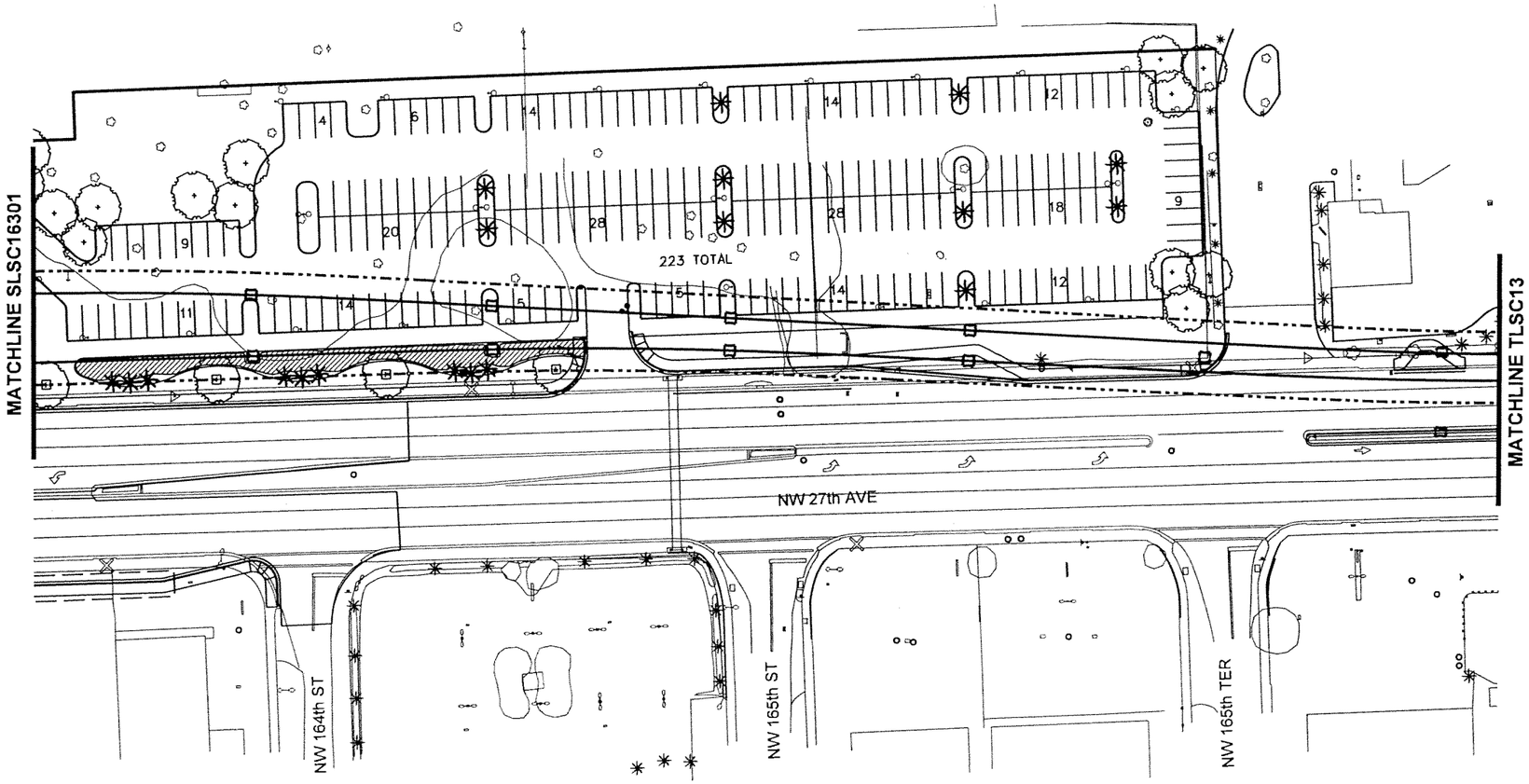

SUBJECT TO CHANGE

CAR/DWG 05-06 Designed by Date						NORTH CORRIDOR METRORAIL EXTENSION - PRELIMINARY ENGINEERING (100% SUBMITTAL)
CAR 05-06 Drawn by Date						MIAMI-DADE TRANSIT
DWG 05-06 Checked by Date						PARSONS 7600 CORPORATE CENTER DRIVE, SUITE 500 MIAMI, FLORIDA 33126 PHONE: (786) 464-1000 FAX: (786) 845-7119 CERTIFICATE OF AUTHORIZATION NO. 1838
Approved by Date	No.	Date	By / Chk	App.	Revisions	Approved / Date / Approved / Date

LANDSCAPE

163 RD STREET (CONT.)
STATION LANDSCAPING

Scale 1" = 40' | Drawing SLSC16302 | Sheet 168

5/10/2006 4:10:03 PM R:\646331 - North Corridor Metrorail\Landscape\Cadd\Contract\SLSC16302.dgn

N

0 20 80

Feet

LEGEND

- STREET TREE
- LARGE PALM TREE
- MID-SIZED PALM TREE
- SMALL ORNAMENTAL TREE
- EVERGREEN TREE
- SHRUB MASSES / GROUNCOVERS / PERENNIALS / ORNAMENTAL GRASSES

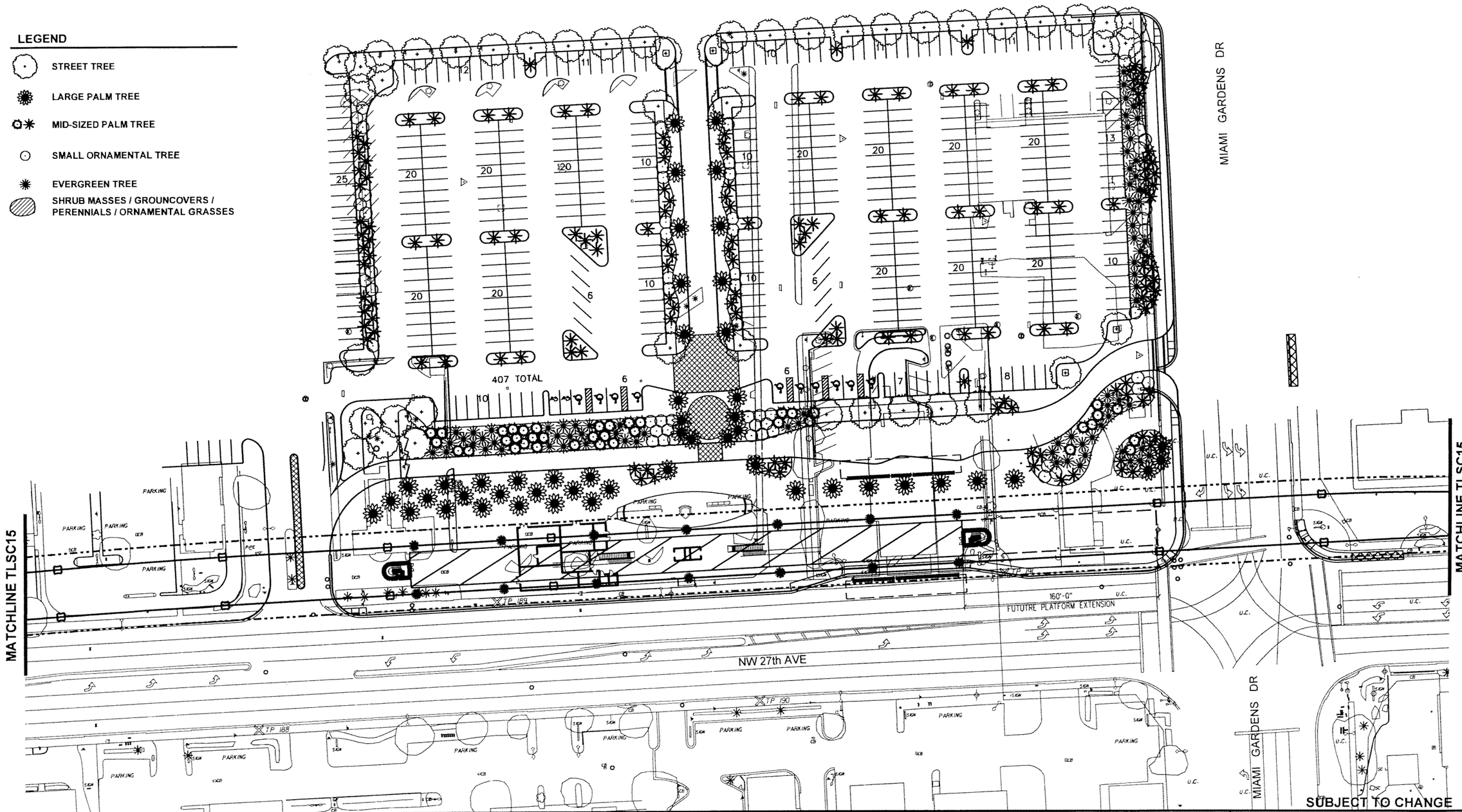

CAR/DWG Designed by	05-06 Date					
CAR Drawn by	05-06 Date					
DWG Checked by	05-06 Date					
Approved by	Date	No.	Date	By / Chk	App.	Revisions

NORTH CORRIDOR METRORAIL EXTENSION - PRELIMINARY ENGINEERING (100% SUBMITTAL)

MIAMI-DADE TRANSIT

PARSONS
7600 CORPORATE CENTER DRIVE, SUITE 500
MIAMI, FLORIDA 33126
PHONE: (786) 464-1000 FAX: (786) 845-7119
CERTIFICATE OF AUTHORIZATION NO. 1838

Approved | Date | Approved | Date

LANDSCAPE

183 RD STREET
STATION LANDSCAPING

Scale 1" = 40' | Drawing SLSC18301 | Sheet 169

5/10/2006 4:10:45 PM R:\646331 - North Corridor Metrorail\Landscape\Cadd\Contract\SLSC18301.dgn

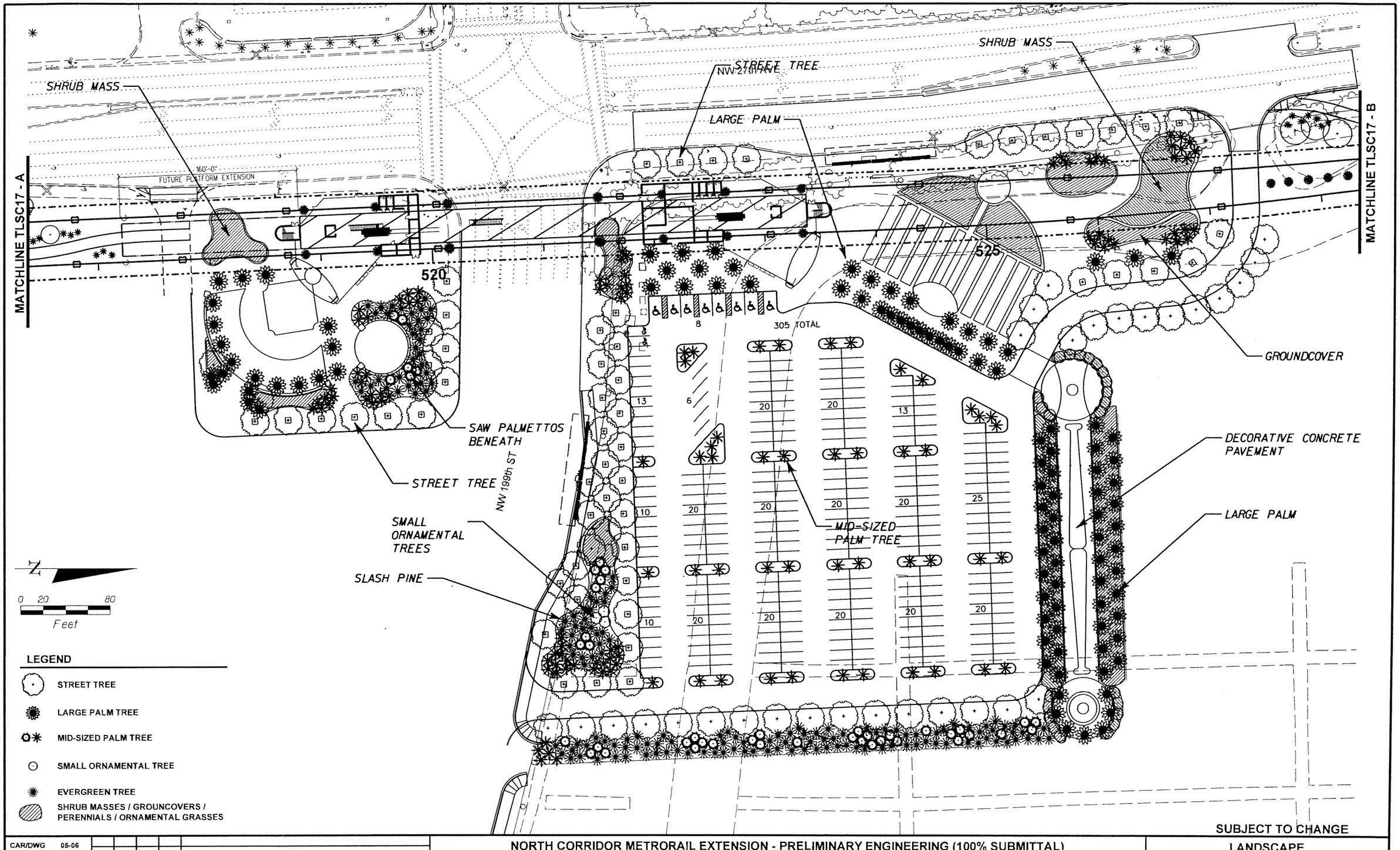

CAR/DWG Designed by	05-06 Date						
CAR Drawn by	05-06 Date						
DWG Checked by	05-06 Date						
Approved by	Date	No.	Date	By / Chk	App.	Revisions	

NORTH CORRIDOR METRORAIL EXTENSION - PRELIMINARY ENGINEERING (100% SUBMITTAL)

LANDSCAPE

MIAMI-DADE TRANSIT

PARSONS
7600 CORPORATE CENTER DRIVE, SUITE 500
MIAMI, FLORIDA 33126
PHONE: (786) 464-1000 FAX: (786) 845-7119
CERTIFICATE OF AUTHORIZATION NO. 1838

Approved	Date	Approved	Date

199 TH STREET
STATION LANDSCAPING

Scale 1" = 40' | Drawing SLSC19901 | Sheet 170

5/10/2006 4:11:30 PM R:\646331 - North Corridor Metrorail\Landscape\Cadd\Contract\SLSC19901.dgn

0 20 80
Feet

LEGEND

- STREET TREE
- SMALL ORNAMENTAL TREE
- LARGE PALM TREE
- EVERGREEN TREE
- MID-SIZED PALM TREE
- SHRUB MASSES / GROUNCOVERS / PERENNIALS / ORNAMENTAL GRASSES

MATCHLINE SLSC21502

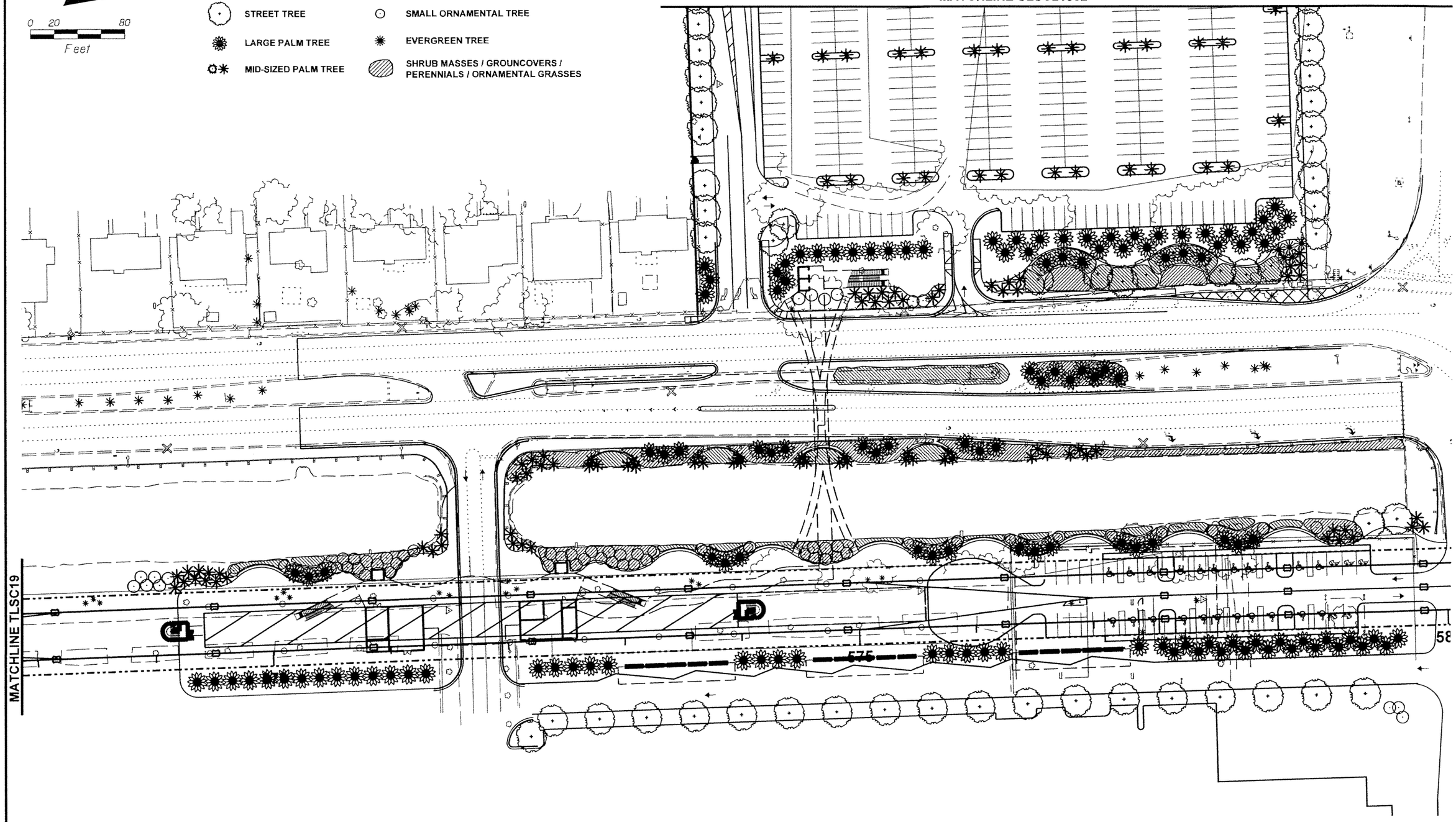

SUBJECT TO CHANGE

CAR/DWG Designed by	05-06 Date					
CAR Drawn by	05-06 Date					
DWG Checked by	05-06 Date					
Approved by	Date	No.	Date	By / Chk	App.	Revisions

NORTH CORRIDOR METRORAIL EXTENSION - PRELIMINARY ENGINEERING (100% SUBMITTAL)

LANDSCAPE

MIAMI-DADE TRANSIT

PARSONS
7600 CORPORATE CENTER DRIVE, SUITE 500
MIAMI, FLORIDA 33126
PHONE: (786) 464-1000 FAX: (786) 845-7119
CERTIFICATE OF AUTHORIZATION NO. 1838

Approved	Date	Approved	Date

215 TH STREET STATION LANDSCAPING

Scale 1" = 40' | Drawing SLSC21501 | Sheet

5/10/2006 4:06:18 PM R:\646331 - North Corridor Metrorail\Landscape\Cadd\Contract\SLSC21501.dgn

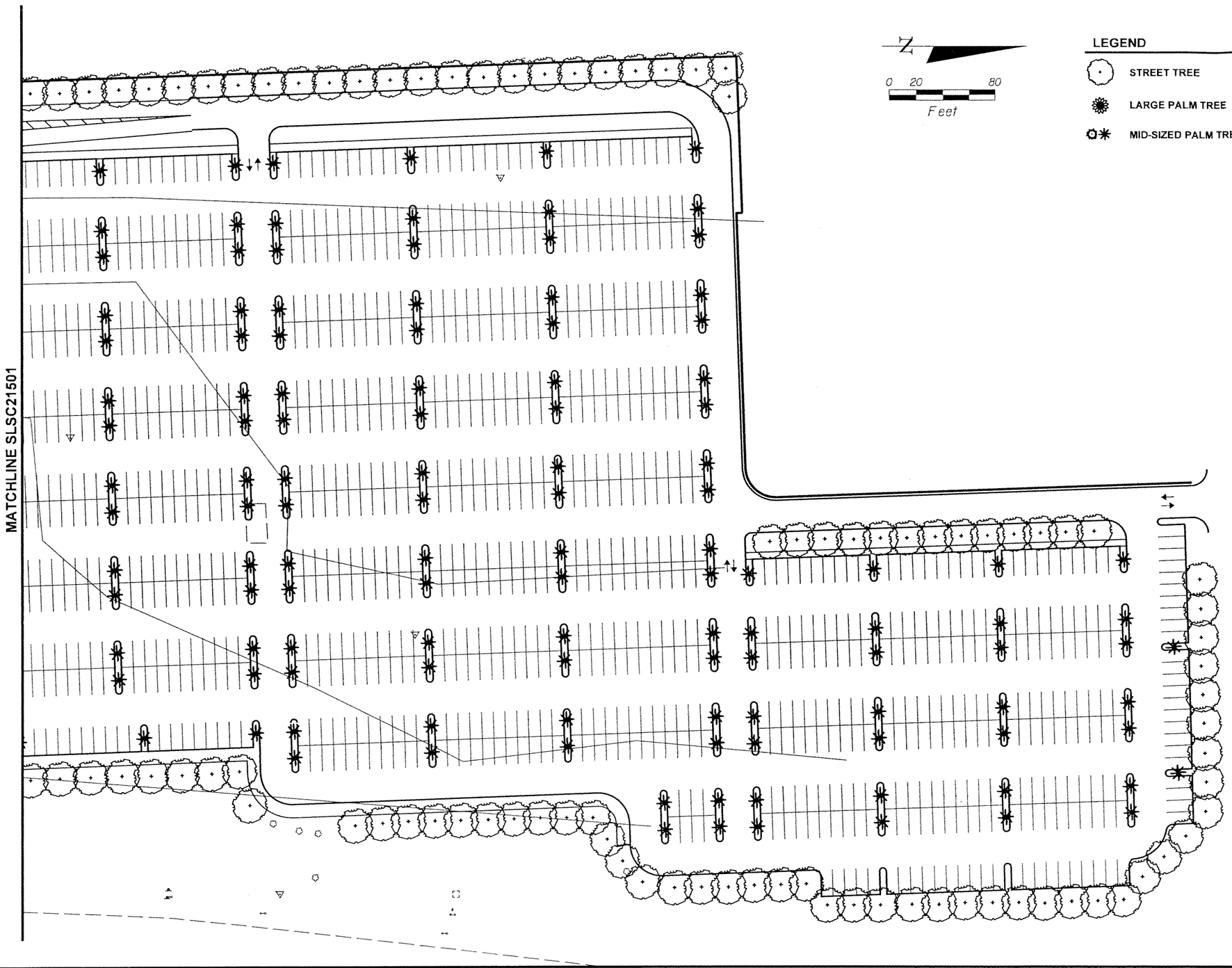

N

0 20 80

Feet

LEGEND

- STREET TREE
- SMALL ORNAMENTAL TREE
- LARGE PALM TREE
- EVERGREEN TREE
- MID-SIZED PALM TREE
- SHRUB MASSES / GROUNCOVERS / PERENNIALS / ORNAMENTAL GRASSES

SUBJECT TO CHANGE

CAR/DWG Designed by	05-06 Date					
CAR Drawn by	05-06 Date					
DWG Checked by	05-06 Date					
Approved by	Date	No.	Date	By / Chk	App.	Revisions

NORTH CORRIDOR METRORAIL EXTENSION - PRELIMINARY ENGINEERING (100% SUBMITTAL)

MIAMI-DADE COUNTY

MIAMI-DADE TRANSIT

PARSONS
7600 CORPORATE CENTER DRIVE, SUITE 500
MIAMI, FLORIDA 33126
PHONE: (786) 464-1000 FAX: (786) 845-7119
CERTIFICATE OF AUTHORIZATION NO. 1836

Approved	Date	Approved	Date

LANDSCAPE

215 TH STREET (CONT.)
STATION LANDSCAPING

Scale	Drawing	Sheet
1" = 40'	SLSC21502	12

5/10/2006 4:12:07 PM R:\646331 - North Corridor Metrorail\Landscape\Cadd\Contract\SLSC21502.dgn

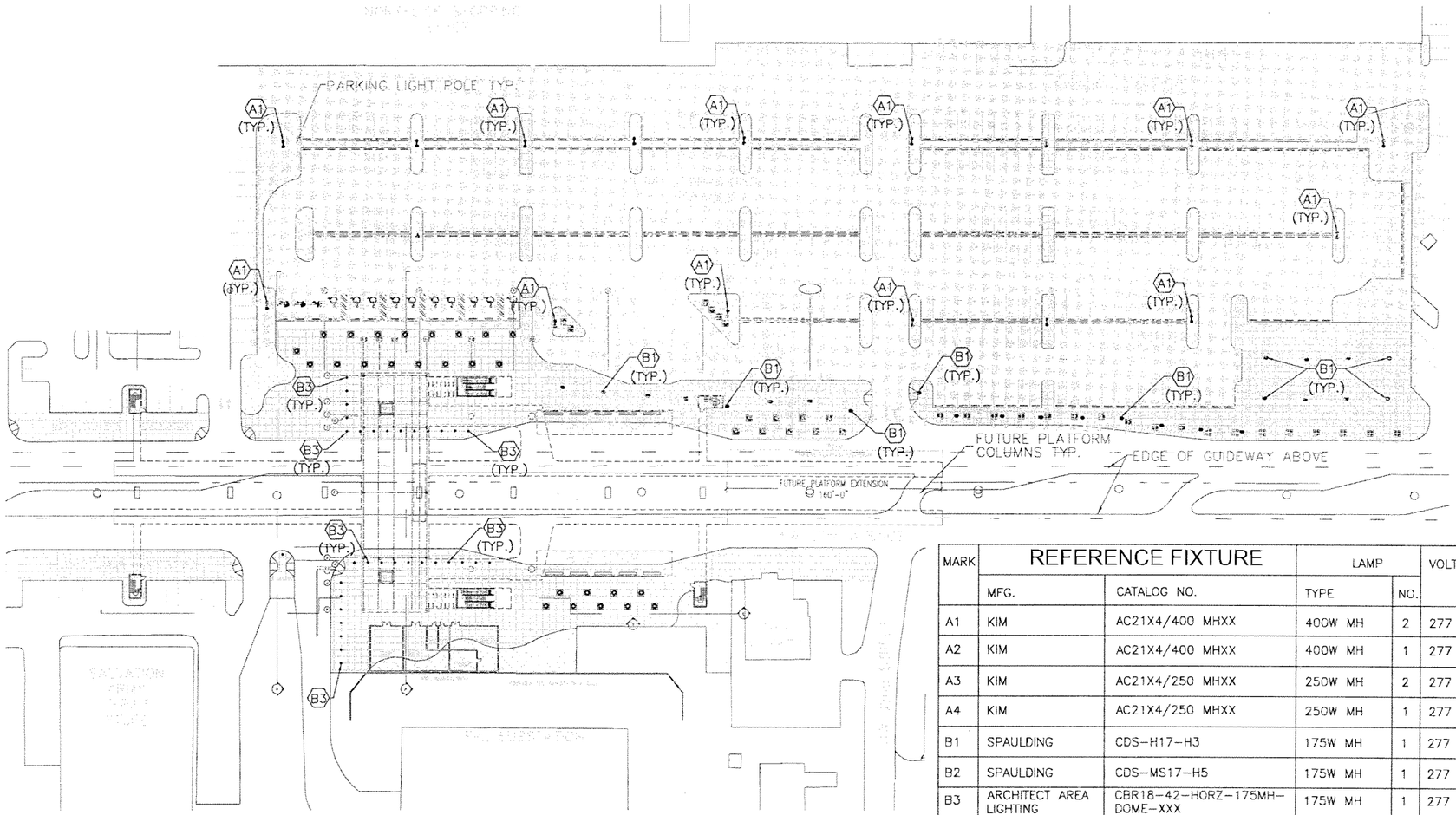

MARK	REFERENCE FIXTURE		LAMP		VOLT	MOUNTING	REMARKS
	MFG.	CATALOG NO.	TYPE	NO.			
A1	KIM	AC21X4/400 MHXX	400W MH	2	277	TWIN/POLE	30' MOUNTING HEIGHT (MT.HT.)
A2	KIM	AC21X4/400 MHXX	400W MH	1	277	SINGLE/POLE	30' MT.HT.
A3	KIM	AC21X4/250 MHXX	250W MH	2	277	TWIN/POLE	25' MT.HT.
A4	KIM	AC21X4/250 MHXX	250W MH	1	277	SINGLE/POLE	25' MT.HT.
B1	SPAULDING	CDS-H17-H3	175W MH	1	277	POLE/15'MT. HT.	TYPE III DIST.
B2	SPAULDING	CDS-MS17-H5	175W MH	1	277	POLE/ MT. HT.	TYPE V DIST.
B3	ARCHITECT AREA LIGHTING	CBR18-42-HORZ-175MH-DOME-XXX	175W MH	1	277	FLOOR	CONCRETE BOLLARD
C	KENNALL	MR17CD-PP-XX	100W MH	1	277	WALL/CEIL. MT.	ENTRANCE/PLATFORM/BUS SHELTER
D1	WINONA LIGHTING	P2-LSW-M400-XXX-LS4-SEW-X-STD	400W MH	1	277	SURFACE	ENTRANCE/PLATFORM CANOPY
D2	LOUIS POULSEN LIGHTING	ARP/1/150MH/XX/WIDE	150W MH	1	277	SUSPENSION TYPE	BUS SHELTER (HIGH CEILING)
D3	ARCHITECT AREA LIGHTING	CPH-250PSMH-XXX-SHD	250W MH	1	277	SURFACE	HIGH CEILING CANOPY
E	KIM	PGL51-175PMH	175W MH	1	277	SURFACE	PARKING GARAGE
F	KIM	LTV710-NF-175MH	175W MH	1	120	IN-GRADE	LANDSCAPE
G	COLUMBIA	LUN4-232-EB	F032 FLUOR.	2	277	SURFACE	JANITOR/ELEC/MECH/MAINT.
H	COLUMBIA	MLVL4-232EB8	F032 FLUOR.	2	277	CEILING	BATHROOMS (VANDAL RESISTANT)

0 25 50 100

SUBJECT TO CHANGE

G:\550515 No...\Corridor\NW 82 ST\Elec\SHT\EL-01.dwg, 5/12/2006 1:56:55 PM, blindholm

Designed by A.C. Date
Drawn by B.L. Date
Checked by A.C. Date
A.C.
Approved by Date

No.	Date	By / Chk	App.	Revisions

NORTH CORRIDOR METRORAIL EXTENSION - PRELIMINARY ENGINEERING (100% SUBMITTAL)

MIAMI-DADE COUNTY

MIAMI-DADE TRANSIT

PARSONS
7600 CORPORATE CENTER DRIVE, SUITE 500
MIAMI, FLORIDA 33126
PHONE: (786) 464-1000 FAX: (786) 845-7119
CERTIFICATE OF AUTHORIZATION NO. 1838

Approved Date

H.J. ROSS
201 ALHAMBRA CIRCLE SUITE 900
CORAL GABLES, FLORIDA 33134
PHONE: (305) 567-1888 / FAX: (305) 567-1771
407

Approved Date 05-05-06

ELECTRICAL

NW 82ND ST. STATION
ELECTRICAL
SITE PLAN

Scale 1" = 100' Drawing EL-01 Sheet 1-73

LIGHTING:
4– Ⓖ, 20FC

LANDSCAPE
LIGHTING: 3– Ⓕ

ROOM WATTS: 4130
LIGHTING: 1– Ⓖ, 10FC
PROVIDE: SD,ID,CCTV,PA,FAD

POWER: 10HP EACH
LIGHTING: 10– Ⓓ2
PROVIDE: FAD

LIGHTING: 5– Ⓓ1
FIXTURES 2FC

LIGHTING:
4– Ⓖ, 20FC

FUTURE PLATFORM EXTEN
160'–0"

LANDSCAPE
LIGHTING: 3– Ⓕ

LIGHTING:
4– Ⓖ, 20FC

ROOM WATTS: 4130
LIGHTING: 1– Ⓖ, 10FC
PROVIDE: SD,ID,CCTV,PA,FAD

POWER: 10HP EACH
LIGHTING: 10– Ⓓ2
PROVIDE: FAD

LIGHTING: 5– Ⓓ1
FIXTURES 2FC

ROOM WATTS: 2380
LIGHTING: 12– Ⓖ, 30FC
PROVIDE: ID,SD,CCTV,
EM.TEL.,FAD

ROOM WATTS: 3300
LIGHTING: 8– Ⓖ, 30FC
PROVIDE: FAD

LIGHTING:
4– Ⓖ, 20FC

LANDSCAPE
LIGHTING: 8– Ⓕ

ROOM WATTS: 1500
LIGHTING: 8– Ⓖ, 15FC
PROVIDE: ID,
SD,CCTV,EM.TEL.,FAD

ROOM WATTS: 370
LIGHTING: 4– Ⓖ, 30FC
PROVIDE: PA,ID,SD,FAD

ROOM WATTS: 180
LIGHTING: 1– Ⓖ, 10FC
PROVIDE: FAD

ROOM WATTS: 16190
LIGHTING: 10– Ⓖ, 30FC
PROVIDE: ID,SD,CCTV,FACP,
FAD,PA,EM.TEL.

LANDSCAPE
LIGHTING: 8– Ⓕ

ABBREVIATIONS:
INTRUSION DETECTION : ID
SECURITY DOORS: SD
PUBLIC ADDRESS SYSTEM: PA
CLOSED CIRCUIT TV SYSTEM: CCTV
FIRE ALARM CONTROL PANEL: FACP
FIRE ALARM DEVICE: FAD
EMERGENCY TELEPHONE: EM. TEL.

0 10 20 40

SUBJECT TO CHANGE

G:\550515 N... Corridor\NW 82 ST\Elec\SHT\EL-02.dwg, 5/12/2006 1:57:04 PM, blindholm

Designed by A.C. Date
Drawn by B.L. Date
Checked by A.C. Date
A.C.
Approved by Date

No.	Date	By / Chk	App.	Revisions

NORTH CORRIDOR METRORAIL EXTENSION - PRELIMINARY ENGINEERING (100% SUBMITTAL)

MIAMI-DADE COUNTY

MIAMI-DADE TRANSIT

PARSONS
7600 CORPORATE CENTER DRIVE, SUITE 500
MIAMI, FLORIDA 33126
PHONE: (786) 464-1000 FAX: (786) 845-7119
CERTIFICATE OF AUTHORIZATION NO. 1838

Approved Date

H.J. ROSS
201 ALHAMBRA CIRCLE SUITE 900
CORAL GABLES, FLORIDA 33134
PHONE: (305) 567-1888 / FAX: (305) 567-1771
407

Approved Date 05-05-06

ELECTRICAL

NW 82ND ST. STATION
ELECTRICAL
PLAZA LEVEL PLAN

Scale 1" = 40' Drawing EL-02 Sheet 194

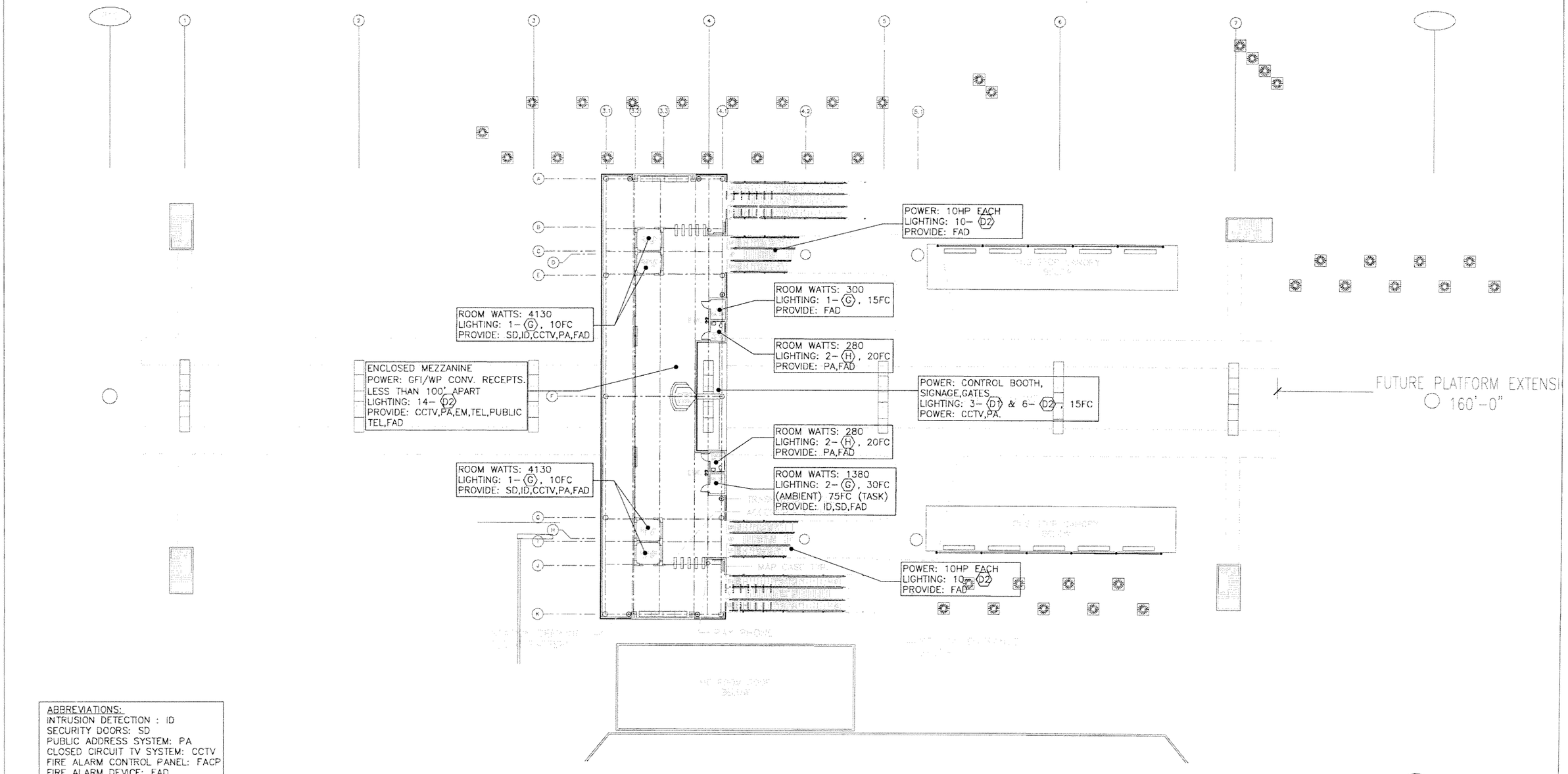

ABBREVIATIONS:
INTRUSION DETECTION : ID
SECURITY DOORS: SD
PUBLIC ADDRESS SYSTEM: PA
CLOSED CIRCUIT TV SYSTEM: CCTV
FIRE ALARM CONTROL PANEL: FACP
FIRE ALARM DEVICE: FAD
EMERGENCY TELEPHONE: EM TEL.

SUBJECT TO CHANGE

NORTH CORRIDOR METRORAIL EXTENSION - PRELIMINARY ENGINEERING (100% SUBMITTAL)

ELECTRICAL

Designed by A.C. Date
Drawn by B.L. Date
Checked by A.C. Date
Approved by A.C. Date

No.	Date	By / Chk	App.	Revisions

MIAMI-DADE COUNTY

MIAMI-DADE TRANSIT

PARSONS
7600 CORPORATE CENTER DRIVE, SUITE 500
MIAMI, FLORIDA 33126
PHONE: (786) 464-1000 FAX: (786) 845-7119
CERTIFICATE OF AUTHORIZATION NO. 1838

H.J. ROSS
201 ALHAMBRA CIRCLE SUITE 900
CORAL GABLES, FLORIDA 33134
PHONE: (305) 567-1888 / FAX: (305) 567-1771
407

Approved Date
Approved Date 05-05-06

NW 82ND ST. STATION
ELECTRICAL
MEZZANINE LEVEL PLAN

Scale 1"=40' Drawing EL-03 Sheet 175

G:\550515 No... Corridor\NW 82 ST\Elec\SHT\EL-03.dwg, 5/12/2006 1:57:13 PM, blindholm

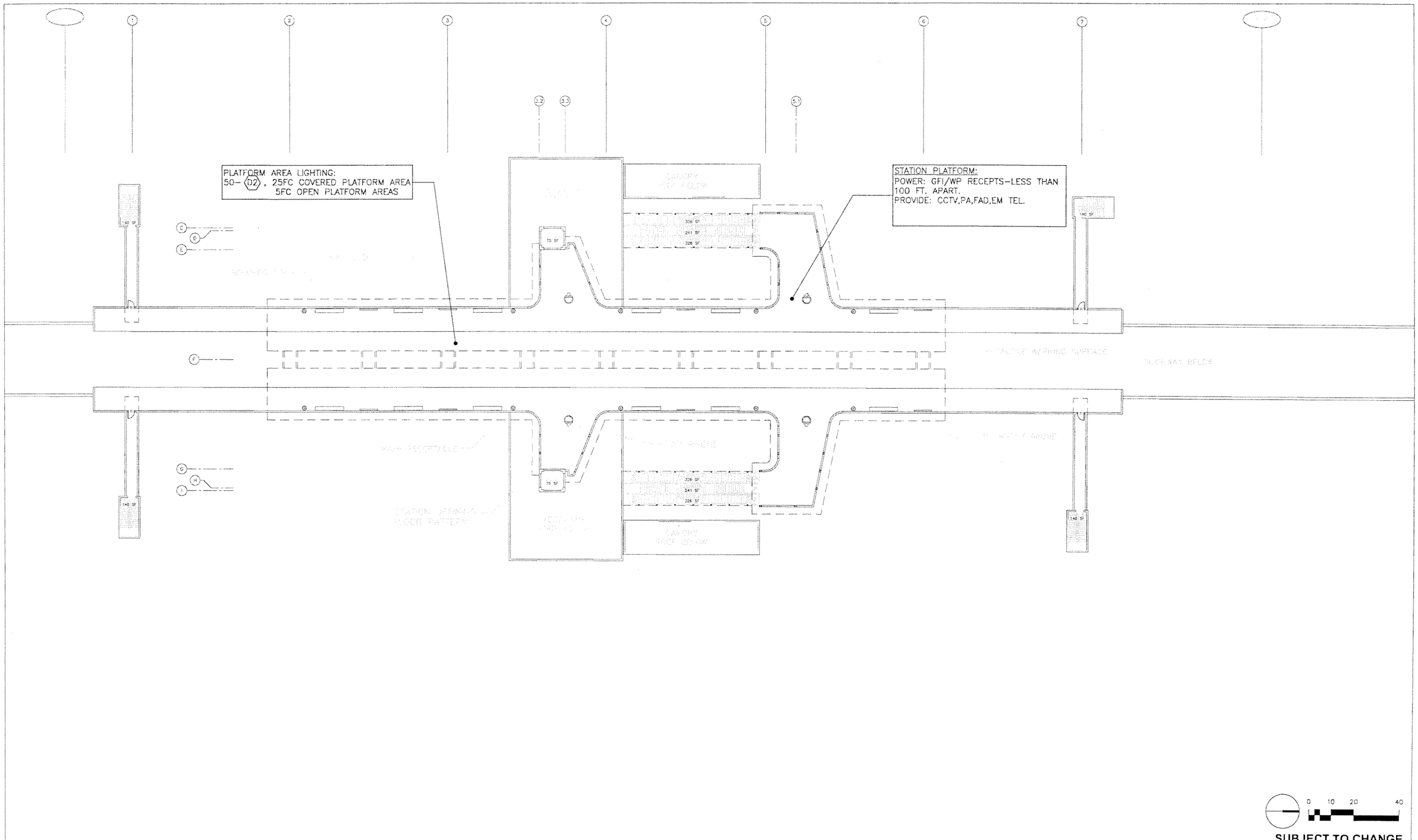

NORTH CORRIDOR METRORAIL EXTENSION - PRELIMINARY ENGINEERING (100% SUBMITTAL)

ELECTRICAL

MIAMI-DADE COUNTY

MIAMI-DADE TRANSIT

PARSONS
7600 CORPORATE CENTER DRIVE, SUITE 500
MIAMI, FLORIDA 33126
PHONE: (786) 464-1000 FAX: (786) 845-7119
CERTIFICATE OF AUTHORIZATION NO. 1838

H.J. ROSS
201 ALHAMBRA CIRCLE SUITE 900
CORAL GABLES, FLORIDA 33134
PHONE: (305) 567-1888 / FAX: (305) 567-1771
407

NW 82ND ST. STATION ELECTRICAL PLATFORM LEVEL PLAN

Designed by A.C.	Date					
Drawn by B.L.	Date					
Checked by A.C.	Date					
A.C.						
Approved by	Date	No.	Date	By / Chk	App.	Revisions

Approved | Date | Approved | Date 05-05-06 | Scale 1" = 40' | Drawing EL-04 | Sheet 176

G:\550515 No. Corridor\NW 82 ST\Elec\SHT\EL-04.dwg, 5/12/2006 1:57:17 PM, blindholm

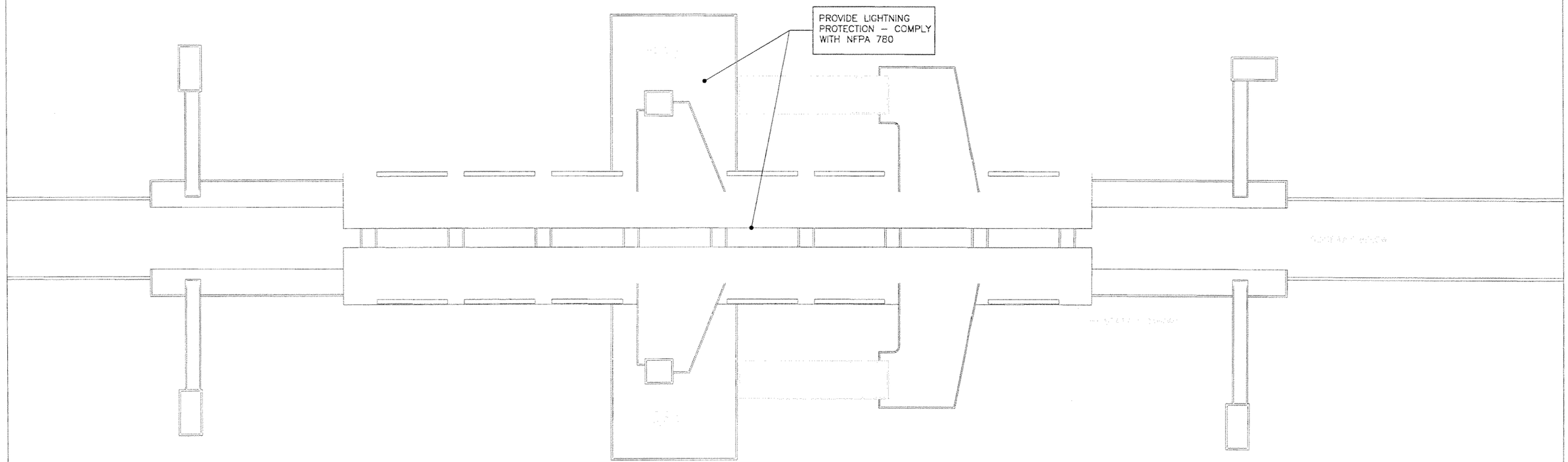

0 10 20 40

SUBJECT TO CHANGE

G:\550515 No...\CorridorNW 82 ST\Elec\SHTEL-05.dwg, 5/12/2006 1:57:22 PM, blindholm

Designed by A.C. Date						NORTH CORRIDOR METRORAIL EXTENSION - PRELIMINARY ENGINEERING (100% SUBMITTAL)	ELECTRICAL
Drawn by B.L. Date						MIAMI-DADE COUNTY / MIAMI-DADE TRANSIT	NW 82ND ST. STATION ELECTRICAL ROOF PLAN
Checked by A.C. Date						PARSONS 7600 CORPORATE CENTER DRIVE, SUITE 500 MIAMI, FLORIDA 33126 PHONE: (786) 464-1000 FAX: (786) 845-7119 CERTIFICATE OF AUTHORIZATION NO. 1838	H.J. ROSS 201 ALHAMBRA CIRCLE SUITE 900 CORAL GABLES, FLORIDA 33134 PHONE: (305) 567-1888 / FAX: (305) 567-1771 407
Approved by A.C. Date	No.	Date	By / Chk	App.	Revisions	Approved Date	Approved Date 05-05-06
							Scale 1"=40' Drawing EL-05 Sheet 17

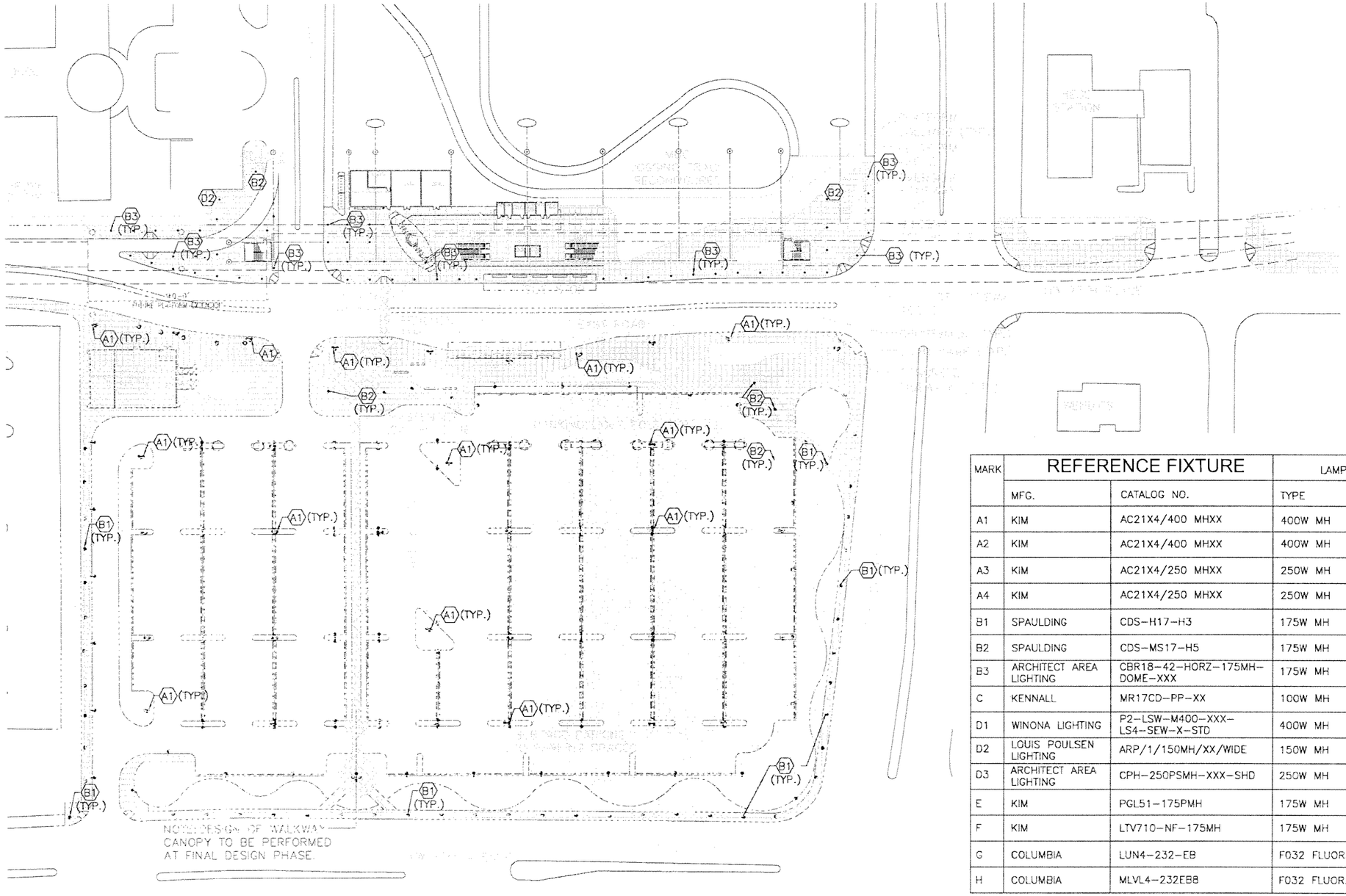

MARK	REFERENCE FIXTURE		LAMP		VOLT	MOUNTING	REMARKS
	MFG.	CATALOG NO.	TYPE	NO.			
A1	KIM	AC21X4/400 MHXX	400W MH	2	277	TWIN/POLE	30' MOUNTING HEIGHT (MT.HT.)
A2	KIM	AC21X4/400 MHXX	400W MH	1	277	SINGLE/POLE	30' MT.HT.
A3	KIM	AC21X4/250 MHXX	250W MH	2	277	TWIN/POLE	25' MT.HT.
A4	KIM	AC21X4/250 MHXX	250W MH	1	277	SINGLE/POLE	25' MT.HT.
B1	SPAULDING	CDS-H17-H3	175W MH	1	277	POLE/15'MT. HT.	TYPE III DIST.
B2	SPAULDING	CDS-MS17-H5	175W MH	1	277	POLE/ MT. HT.	TYPE V DIST.
B3	ARCHITECT AREA LIGHTING	CBR18-42-HORZ-175MH-DOME-XXX	175W MH	1	277	FLOOR	CONCRETE BOLLARD
C	KENNALL	MR17CD-PP-XX	100W MH	1	277	WALL/CEIL. MT.	ENTRANCE/PLATFORM/BUS SHELTER
D1	WINONA LIGHTING	P2-LSW-M400-XXX-LS4-SEW-X-STD	400W MH	1	277	SURFACE	ENTRANCE/PLATFORM CANOPY
D2	LOUIS POULSEN LIGHTING	ARP/1/150MH/XX/WIDE	150W MH	1	277	SUSPENSION TYPE	BUS SHELTER (HIGH CEILING)
D3	ARCHITECT AREA LIGHTING	CPH-250PSMH-XXX-SHD	250W MH	1	277	SURFACE	HIGH CEILING CANOPY
E	KIM	PGL51-175PMH	175W MH	1	277	SURFACE	PARKING GARAGE
F	KIM	LTV710-NF-175MH	175W MH	1	120	IN-GRADE	LANDSCAPE
G	COLUMBIA	LUN4-232-EB	F032 FLUOR.	2	277	SURFACE	JANITOR/ELEC/MECH/MAINT.
H	COLUMBIA	MLVL4-232EB8	F032 FLUOR.	2	277	CEILING	BATHROOMS (VANDAL RESISTANT)

0 25 50 100

SUBJECT TO CHANGE

Designed by A.C. Date
Drawn by B.L. Date
Checked by A.C. Date
A.C.
Approved by Date

No.	Date	By / Chk	App.	Revisions

NORTH CORRIDOR METRORAIL EXTENSION - PRELIMINARY ENGINEERING (100% SUBMITTAL)

MIAMI-DADE COUNTY

MIAMI-DADE TRANSIT

PARSONS
7600 CORPORATE CENTER DRIVE, SUITE 500
MIAMI, FLORIDA 33126
PHONE: (786) 464-1000 FAX: (786) 645-7119
CERTIFICATE OF AUTHORIZATION NO. 1838

Approved Date

H.J. ROSS
201 ALHAMBRA CIRCLE SUITE 900
CORAL GABLES, FLORIDA 33134
PHONE: (305) 567-1888 / FAX: (305) 567-1771
407

Approved Date 05-05-06

ELECTRICAL

NW 119TH ST. STATION ELECTRICAL SITE PLAN

Scale 1" = 100' | Drawing EL-06 | Sheet 178

G:\550515 No...\Corridor\NW 119 ST\Elec\SHT\EL-06.dwg, 5/12/2006 2:14:16 PM, blindholm

ROOM WATTS: 3300
LIGHTING: 8– (G), 30FC
PROVIDE: FAD

ROOM WATTS: 18500
LIGHTING: 15– (G), 30FC
PROVIDE: ID,SD,CCTV,FACP,
FAD,PA,EM.TEL.

ROOM WATTS: 2870
LIGHTING: 15– (G), 30FC
PROVIDE: ID,SD,CCTV,
EM.TEL.,FAD

ROOM WATTS: 1500
LIGHTING: 8– (G), 15FC
PROVIDE: ID,
SD,CCTV,EM.TEL.,FAD

ROOM WATTS: 280
LIGHTING: 2– (H), 20FC
PROVIDE: PA,FAD

ROOM WATTS: 1380
LIGHTING: 4– (G), 30FC
(AMBIENT) 75FC (TASK)
PROVIDE: ID,SD,FAD

ROOM WATTS: 350
LIGHTING: 4– (G), 30FC
PROVIDE: PA,ID,SD,FAD

ROOM WATTS: 300
LIGHTING: 2– (G), 15FC
PROVIDE: FAD

ROOM WATTS: 180
LIGHTING: 1– (G), 10FC
PROVIDE: FAD

LIGHTING:
4– (G), 20FC

LIGHTING:
8– (D3), 5FC

POWER: CONTROL BOOTH,
SIGNAGE,GATES
LIGHTING: 3– (D1) & 6– (D2), 15FC
POWER: CCTV,PA.

POWER: 10HP
LIGHTING: 10– (D2)
PROVIDE: FAD

POWER: 10HP
LIGHTING: 10– (D2)
PROVIDE: FAD

ROOM WATTS: 4130
LIGHTING: 1– (G), 10FC
PROVIDE: SD,ID,CCTV,PA,FAD

ENCLOSED CONCOURSE
POWER: GFI/WP CONV. RECEPTS.
LESS THAN 100' APART
LIGHTING: 14– (D2)
PROVIDE: CCTV,PA,EM,TEL,PUBLIC
TEL,FAD

LIGHTING: 5– (D1)
FIXTURES 2FC

LANDSCAPE
LIGHTING: 2– (F)

LANDSCAPE
LIGHTING: 4– (F)

LANDSCAPE
LIGHTING: 3– (F)

ABBREVIATIONS:
INTRUSION DETECTION : ID
SECURITY DOORS: SD
PUBLIC ADDRESS SYSTEM: PA
CLOSED CIRCUIT TV SYSTEM: CCTV
FIRE ALARM CONTROL PANEL: FACP
FIRE ALARM DEVICE: FAD
EMERGENCY TELEPHONE: EM TEL.

0 10 20 40

SUBJECT TO CHANGE

G:\550515 North Corridor\NW 119 ST\Elec\SHT\EL-07.dwg, 5/12/2006 2:14:29 PM, blindholm

Designed by A.C.	Date						
Drawn by B.L.	Date						
Checked by A.C.	Date						
A.C.							
Approved by	Date	No.	Date	By / Chk	App.	Revisions	

NORTH CORRIDOR METRORAIL EXTENSION - PRELIMINARY ENGINEERING (100% SUBMITTAL)

MIAMI-DADE COUNTY

MIAMI-DADE TRANSIT

PARSONS
7600 CORPORATE CENTER DRIVE, SUITE 500
MIAMI, FLORIDA 33126
PHONE: (786) 464-1000 FAX: (786) 845-7119
CERTIFICATE OF AUTHORIZATION NO. 1836

Approved Date

H.J. ROSS
201 ALHAMBRA CIRCLE SUITE 900
CORAL GABLES, FLORIDA 33134
PHONE: (305) 567-1888 / FAX: (305) 567-1771
407

Approved Date 05-05-06

ELECTRICAL

NW 119TH ST. STATION ELECTRICAL PLAZA LEVEL PLAN

Scale 1" = 40' | Drawing EL-07 | Sheet 119

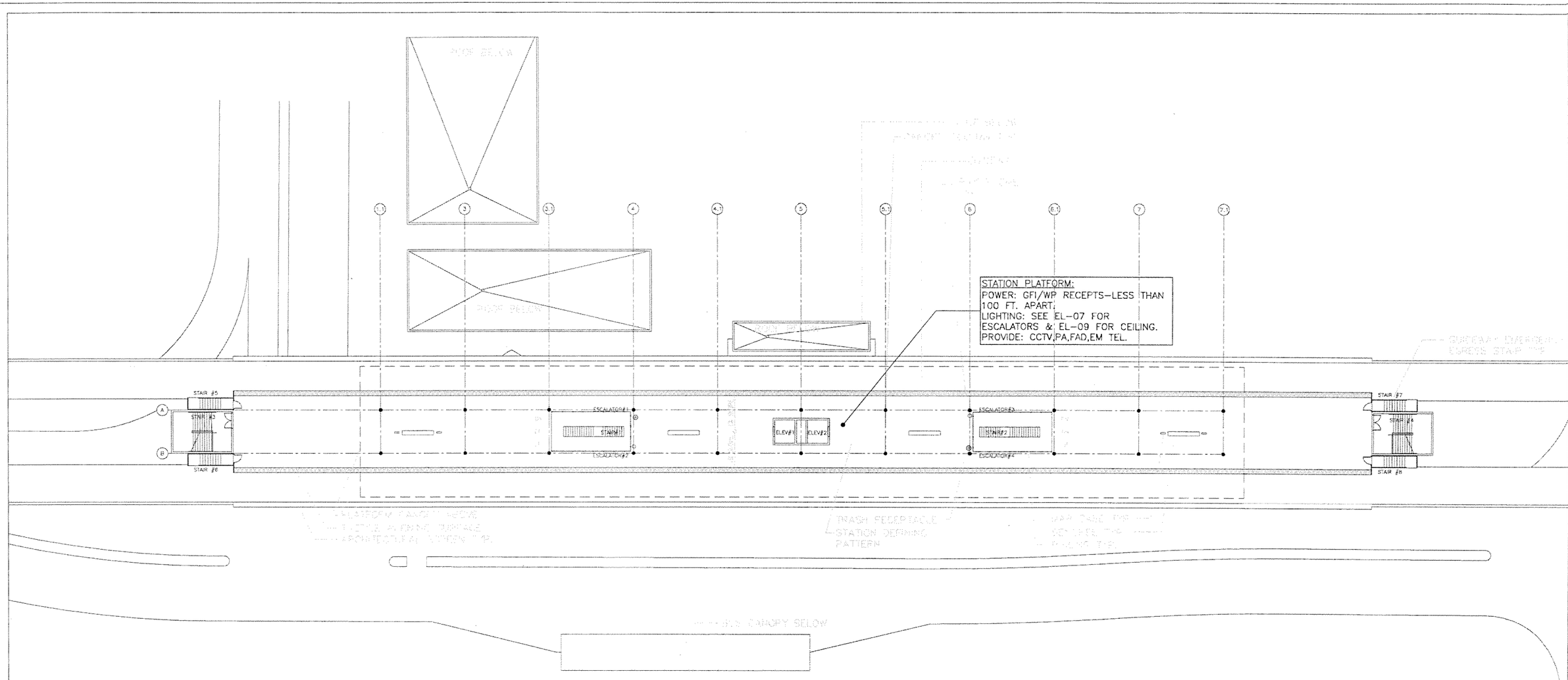

Designed by A.C. Date
Drawn by B.L. Date
Checked by A.C. Date
Approved by A.C. Date

No.	Date	By / Chk	App.	Revisions

NORTH CORRIDOR METRORAIL EXTENSION - PRELIMINARY ENGINEERING (100% SUBMITTAL)

MIAMI-DADE COUNTY

MIAMI-DADE TRANSIT

PARSONS
7600 CORPORATE CENTER DRIVE, SUITE 500
MIAMI, FLORIDA 33126
PHONE: (786) 464-1000 FAX: (786) 845-7119
CERTIFICATE OF AUTHORIZATION NO. 1838

Approved | Date

H.J. ROSS
201 ALHAMBRA CIRCLE SUITE 900
CORAL GABLES, FLORIDA 33134
PHONE: (305) 567-1888 / FAX: (305) 567-1771
407

Approved | Date 05-05-06

ELECTRICAL

NW 119TH ST. STATION ELECTRICAL PLATFORM PLAN

Scale 1" = 40' | Drawing EL-08 | Sheet 180

G:\550515 No...\Corridor\NW 119 ST\Elec\SHT\EL-08.dwg, 5/12/2006 2:14:38 PM, blindholm

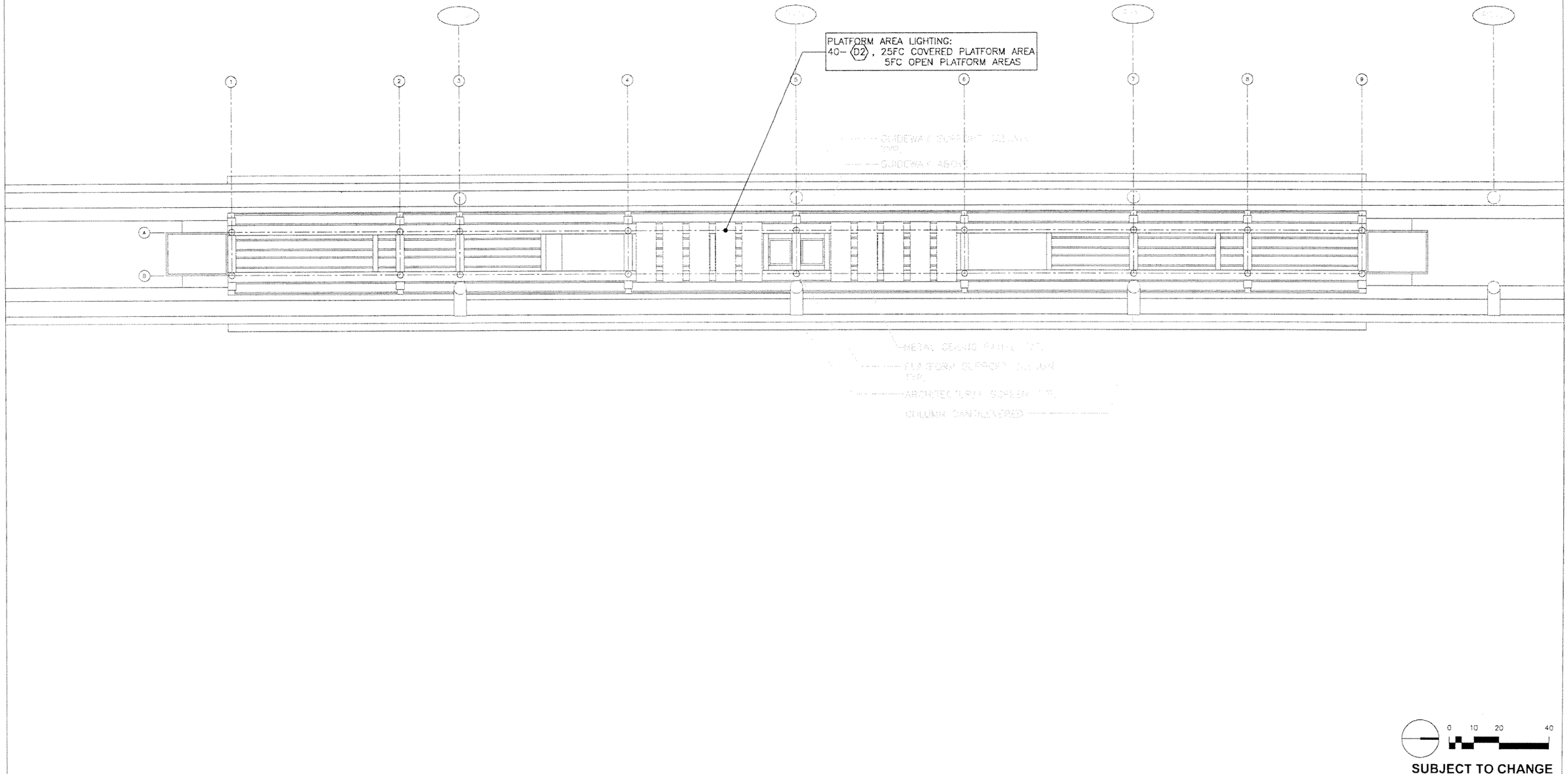

0 10 20 40

SUBJECT TO CHANGE

Designed by A.C. Date						
Drawn by B.L. Date						
Checked by A.C. Date						
A.C.						
Approved by Date	No.	Date	By / Chk	App.	Revisions	

NORTH CORRIDOR METRORAIL EXTENSION - PRELIMINARY ENGINEERING (100% SUBMITTAL)

MIAMI-DADE COUNTY

MIAMI-DADE TRANSIT

PARSONS
7600 CORPORATE CENTER DRIVE, SUITE 500
MIAMI, FLORIDA 33126
PHONE: (786) 464-1000 FAX: (786) 845-7119
CERTIFICATE OF AUTHORIZATION NO. 1838

Approved | Date

H.J. ROSS
201 ALHAMBRA CIRCLE SUITE 900
CORAL GABLES, FLORIDA 33134
PHONE: (305) 567-1888 / FAX: (305) 567-1771
407

Approved | Date 05-05-06

ELECTRICAL

NW 119TH ST. STATION ELECTRICAL REFLECTED CEILING PLAN

Scale 1" = 40' | Drawing EL-09 | Sheet 181

G:\550515 Nor... Corridor\NW 119 ST\Elec\SHT\EL-09.dwg, 5/12/2006 2:14:43 PM, blindholm

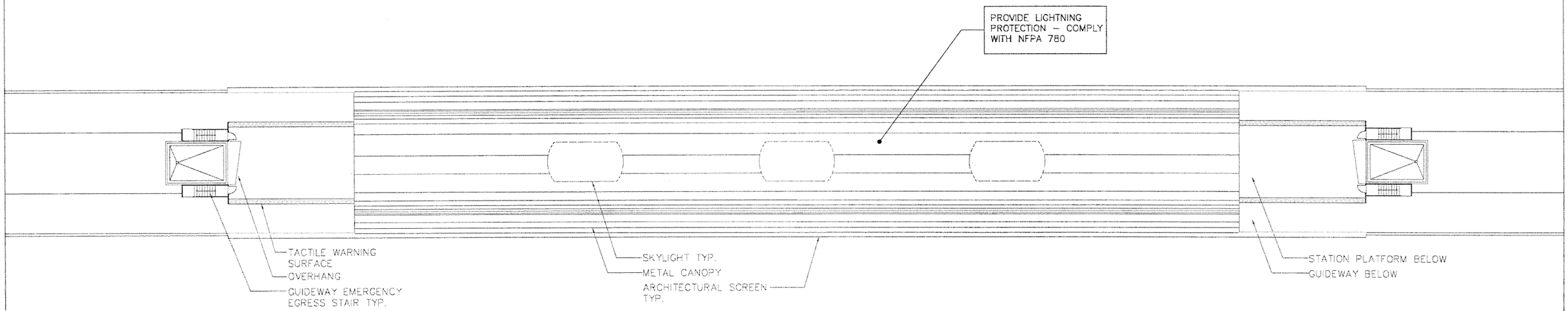

0 10 20 40

SUBJECT TO CHANGE

Designed by A.C. Date					
Drawn by B.L. Date					
Checked by A.C. Date					
A.C.					
Approved by Date	No.	Date	By / Chk	App.	Revisions

NORTH CORRIDOR METRORAIL EXTENSION - PRELIMINARY ENGINEERING (100% SUBMITTAL)

MIAMI-DADE COUNTY

MIAMI-DADE TRANSIT

PARSONS
7600 CORPORATE CENTER DRIVE, SUITE 500
MIAMI, FLORIDA 33126
PHONE: (786) 464-1000 FAX: (786) 845-7119
CERTIFICATE OF AUTHORIZATION NO. 1838

H.J. ROSS
201 ALHAMBRA CIRCLE SUITE 900
CORAL GABLES, FLORIDA 33134
PHONE: (305) 567-1888 / FAX: (305) 567-1771
407

ELECTRICAL

NW 119TH ST. STATION
ELECTRICAL
ROOF PLAN

Approved | Date | Approved | Date 05-05-06 | Scale 1" = 40' | Drawing EL-10 | Sheet 182

G:\550515 North Corridor\NW 119 ST\Elec\SHT\EL-10.dwg, 5/12/2006 2:14:47 PM, blindholm

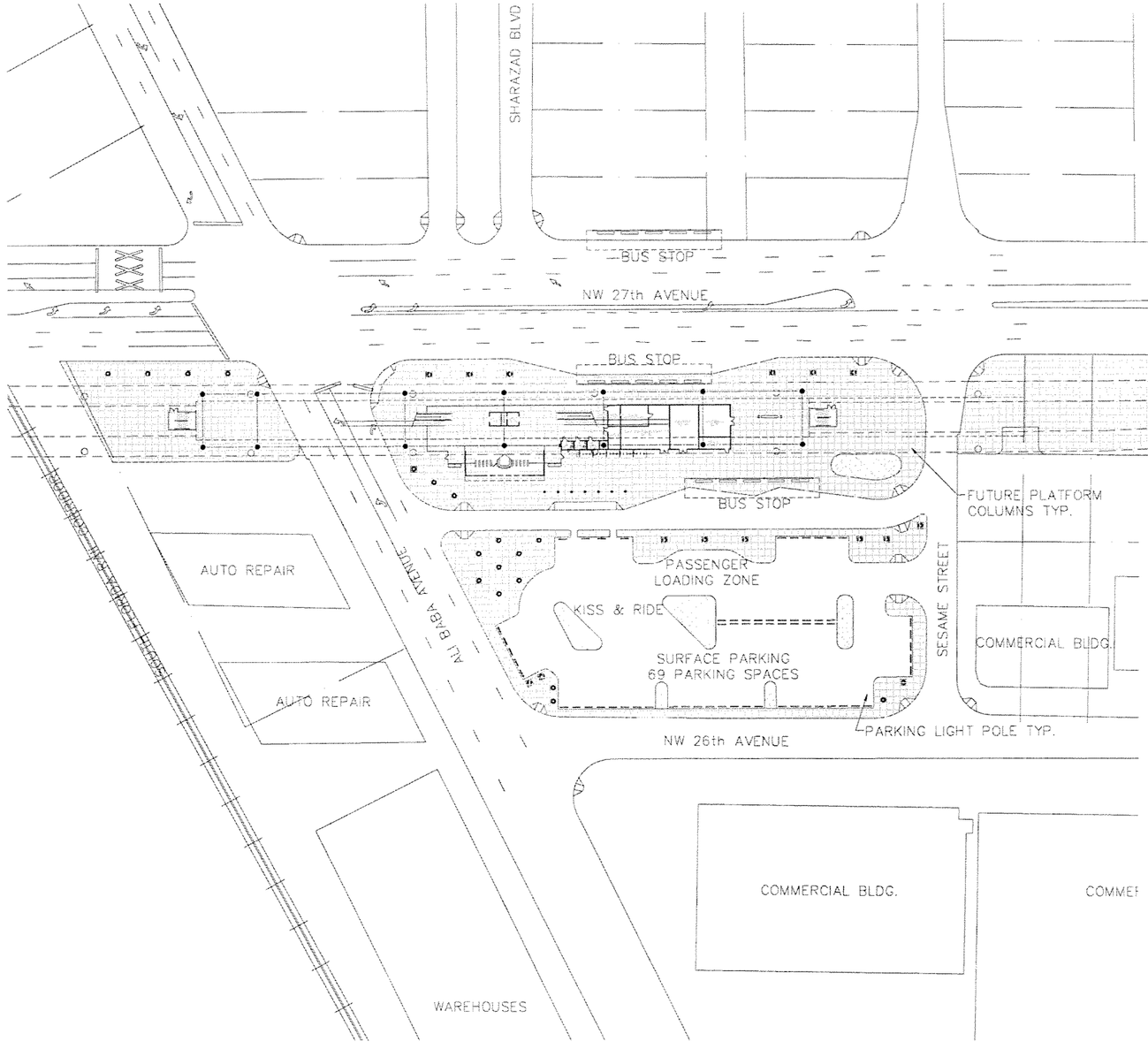

MARK	REFERENCE FIXTURE		LAMP		VOLT	MOUNTING	REMARKS
	MFG.	CATALOG NO.	TYPE	NO.			
A1	KIM	AC21X4/400 MHXX	400W MH	2	277	TWIN/POLE	30' MOUNTING HEIGHT (MT.HT.)
A2	KIM	AC21X4/400 MHXX	400W MH	1	277	SINGLE/POLE	30' MT.HT.
A3	KIM	AC21X4/250 MHXX	250W MH	2	277	TWIN/POLE	25' MT.HT.
A4	KIM	AC21X4/250 MHXX	250W MH	1	277	SINGLE/POLE	25' MT.HT.
B1	SPAULDING	CDS-H17-H3	175W MH	1	277	POLE/15'MT. HT.	TYPE III DIST.
B2	SPAULDING	CDS-MS17-H5	175W MH	1	277	POLE/ MT. HT.	TYPE V DIST.
B3	ARCHITECT AREA LIGHTING	CBR18-42-HORZ-175MH-DOME-XXX	175W MH	1	277	FLOOR	CONCRETE BOLLARD
C	KENNALL	MR17CD-PP-XX	100W MH	1	277	WALL/CEIL. MT.	ENTRANCE/PLATFORM/BUS SHELTER
D1	WINONA LIGHTING	P2-LSW-M400-XXX-LS4-SEW-X-STD	400W MH	1	277	SURFACE	ENTRANCE/PLATFORM CANOPY
D2	LOUIS POULSEN LIGHTING	ARP/1/150MH/XX/WIDE	150W MH	1	277	SUSPENSION TYPE	BUS SHELTER (HIGH CEILING)
D3	ARCHITECT AREA LIGHTING	CPH-250PSMH-XXX-SHD	250W MH	1	277	SURFACE	HIGH CEILING CANOPY
E	KIM	PGL51-175PMH	175W MH	1	277	SURFACE	PARKING GARAGE
F	KIM	LTV710-NF-175MH	175W MH	1	120	IN-GRADE	LANDSCAPE
G	COLUMBIA	LUN4-232-EB	F032 FLUOR.	2	277	SURFACE	JANITOR/ELEC/MECH/MAINT.
H	COLUMBIA	MLVL4-232EB8	F032 FLUOR.	2	277	CEILING	BATHROOMS (VANDAL RESISTANT)

0 25 50 100

SUBJECT TO CHANGE

Designed by A.C. Date
Drawn by B.L. Date
Checked by A.C. Date
A.C.
Approved by Date

No.	Date	By / Chk	App.	Revisions

NORTH CORRIDOR METRORAIL EXTENSION - PRELIMINARY ENGINEERING (100% SUBMITTAL)

MIAMI-DADE COUNTY

MIAMI-DADE TRANSIT

PARSONS
7600 CORPORATE CENTER DRIVE, SUITE 500
MIAMI, FLORIDA 33126
PHONE: (786) 464-1000 FAX: (786) 845-7119
CERTIFICATE OF AUTHORIZATION NO. 1838

H.J. ROSS
201 ALHAMBRA CIRCLE SUITE 900
CORAL GABLES, FLORIDA 33134
PHONE: (305) 567-1888 / FAX: (305) 567-1771
407

Approved Date | Approved Date 05-05-06

ELECTRICAL

NW ALI BABA AVE. STATION ELECTRICAL SITE PLAN

Scale 1" = 100' | Drawing EL-11 | Sheet 183

G:\550515 No... CorridorNW 143 ST\Elec\SHTEL-11.dwg, 5/12/2006 2:30:26 PM, blindholm

NW 27th AVENUE

ROOM WATTS: 16200
LIGHTING: 12– (G), 30FC
PROVIDE: ID,SD,CCTV,FACP, FAD,PA,EM.TEL.

ENCLOSED CONCOURSE
POWER: GFI/WP CONV. RECEPTS. LESS THAN 100' APART
LIGHTING: 14– (D2)
PROVIDE: CCTV,PA,EM,TEL,PUBLIC TEL,FAD

ROOM WATTS: 3300
LIGHTING: 8– (G), 30FC
PROVIDE: FAD

ROOM WATTS: 300
LIGHTING: 4– (G), 30FC
PROVIDE: PA,ID,SD,FAD

LIGHTING: 5 – (D1) FIXTURES 2FC

ROOM WATTS: 2200
LIGHTING: 15– (G), 30FC
PROVIDE: ID,SD,CCTV, EM.TEL.,FAD

ROOM WATTS: 1500
LIGHTING: 8– (G), 15FC
PROVIDE: ID, SD,CCTV,EM.TEL.,FAD

BUS STOP

ROOM WATTS: 1590
LIGHTING: 4– (G), 30FC (AMBIENT) 75FC (TASK)
PROVIDE: ID,SD,FAD

LIGHTING: 2– (D3), 5FC

LIGHTING: 4– (G), 20FC

LIGHTING: 3– (D3), 5FC

POWER: 10HP
LIGHTING: 6– (D2)
PROVIDE: FAD

POWER: CONTROL BOOTH, SIGNAGE,GATES
LIGHTING: 3– (D1) & 6– (D2), 15FC
POWER: CCTV,PA.

ROOM WATTS: 230
LIGHTING: 2– (G), 15FC
PROVIDE: FAD

(C) (TYP.)

LANDSCAPE LIGHTING: 2– (F)

ROOM WATTS: 4130
LIGHTING: 1– (G), 10FC
PROVIDE: SD,ID,CCTV,PA,FAD

ROOM WATTS: 260
LIGHTING: 2– (H), 20FC
PROVIDE: PA,FAD

POWER: 10HP
LIGHTING: 6– (D2)
PROVIDE: FAD

ROOM WATTS: 180
LIGHTING: 1– (G), 10FC
PROVIDE: FAD

LIGHTING: 5 – (D1) FIXTURES 2FC

FUTUF
COLUM

AIR

ALI BABA AVENUE

PASSENGER LOADING ZONE

KISS & RIDE

(A1) (TYP.)

SURFACE PARKING
69 PARKING SPACES

SESAME STREET

COMM

PARKING LIGHT POL

(B1) (TYP.)

NW 26th AVENUE

ABBREVIATIONS:
INTRUSION DETECTION : ID
SECURITY DOORS: SD
PUBLIC ADDRESS SYSTEM: PA
CLOSED CIRCUIT TV SYSTEM: CCTV
FIRE ALARM CONTROL PANEL: FACP
FIRE ALARM DEVICE: FAD
EMERGENCY TELEPHONE: EM TEL.

0 10 20 40

SUBJECT TO CHANGE

G:\550515 N...CorridorNW 143 ST\Elec\SHTEL-12.dwg, 5/12/2006 2:30:36 PM, blindholm

Designed by A.C. Date
Drawn by B.L. Date
Checked by A.C. Date
A.C.
Approved by Date

No.	Date	By / Chk	App.	Revisions

NORTH CORRIDOR METRORAIL EXTENSION - PRELIMINARY ENGINEERING (100% SUBMITTAL)

MIAMI-DADE COUNTY

MIAMI-DADE TRANSIT

PARSONS
7600 CORPORATE CENTER DRIVE, SUITE 500
MIAMI, FLORIDA 33126
PHONE: (786) 464-1000 FAX: (786) 845-7119
CERTIFICATE OF AUTHORIZATION NO. 1838

Approved Date

H.J. ROSS
201 ALHAMBRA CIRCLE SUITE 900
CORAL GABLES, FLORIDA 33134
PHONE: (305) 567-1888 / FAX: (305) 567-1771
407

Approved Date 05-05-06

ELECTRICAL

NW ALI BABA AVE. STATION
ELECTRICAL
PLAZA LEVEL PLAN

Scale 1" = 40' Drawing EL-12 Sheet 184

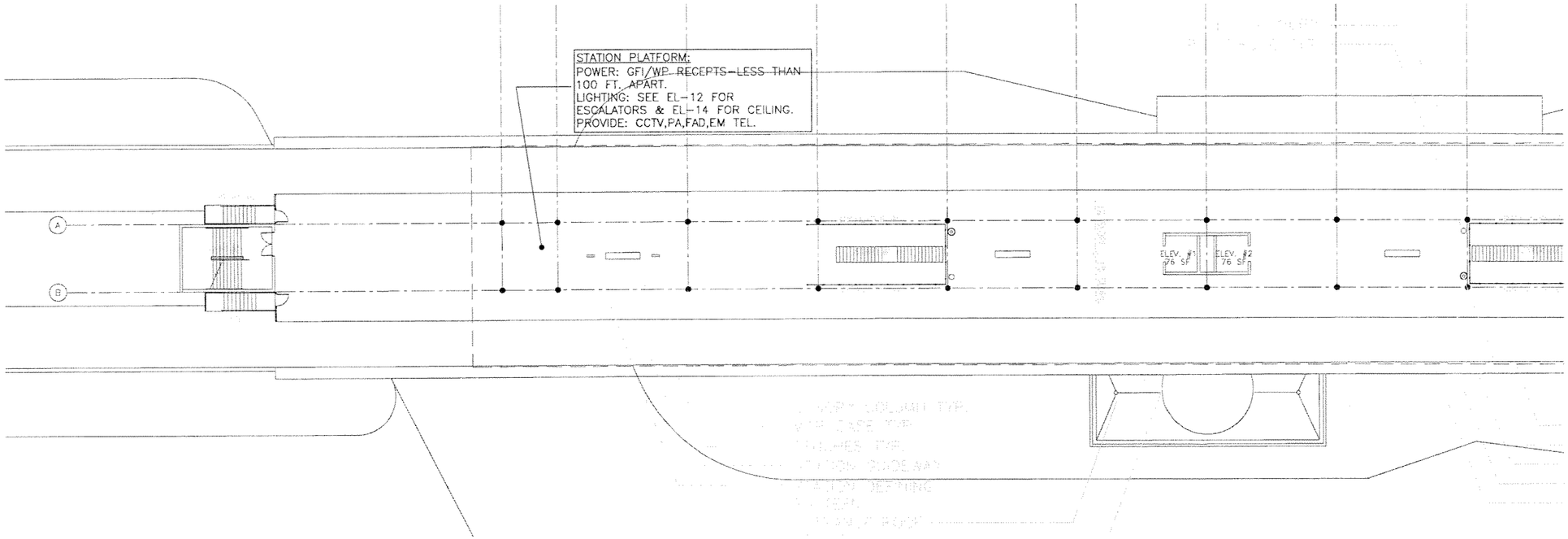

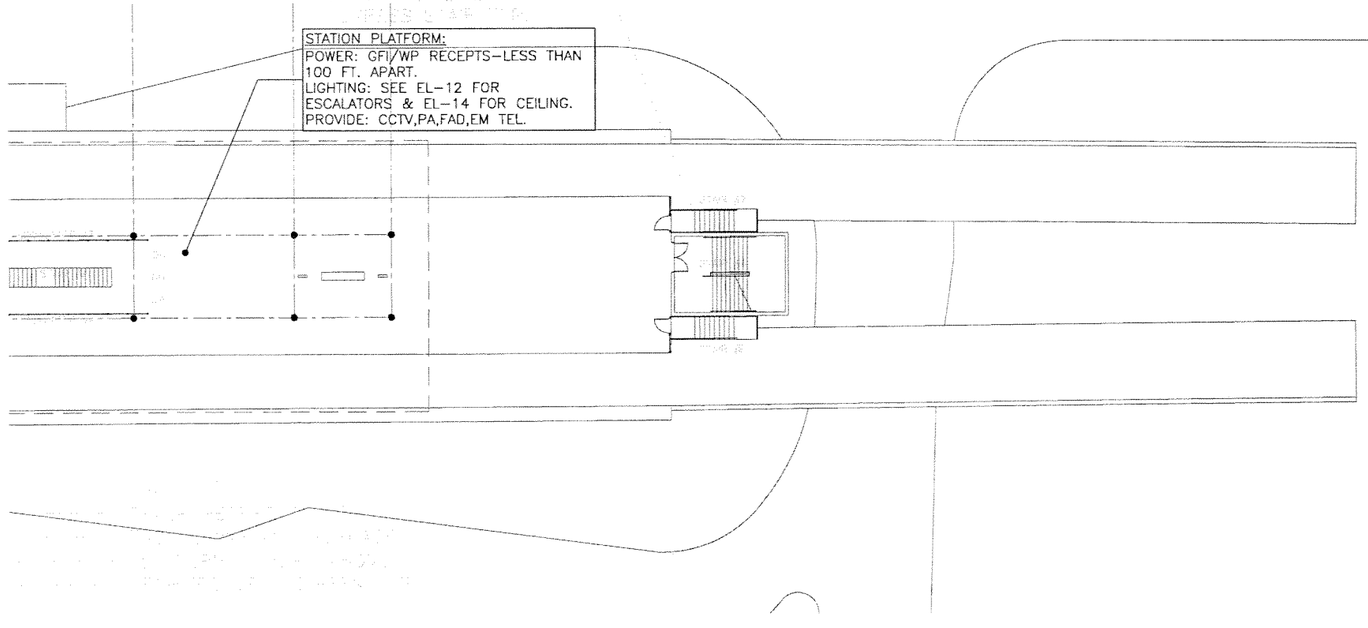

0 8 16 32

SCALE: 1/16" = 1'–0"

SUBJECT TO CHANGE

G:\550515 No...\Corridor\NW 143 ST\Elec\SHT\EL-13.dwg, 5/12/2006 2:30:43 PM, blindholm

Designed by A.C. Date						
Drawn by B.L. Date						
Checked by A.C. Date						
Approved by A.C. Date	No.	Date	By / Chk	App.	Revisions	

NORTH CORRIDOR METRORAIL EXTENSION - PREliminary ENGINEERING (100% SUBMITTAL)

MIAMI-DADE COUNTY

MIAMI-DADE TRANSIT

PARSONS
7600 CORPORATE CENTER DRIVE, SUITE 500
MIAMI, FLORIDA 33126
PHONE: (786) 464-1000 FAX: (786) 845-7119
CERTIFICATE OF AUTHORIZATION NO. 1838

H.J. ROSS
201 ALHAMBRA CIRCLE SUITE 900
CORAL GABLES, FLORIDA 33134
PHONE: (305) 567-1888 / FAX: (305) 567-1771
407

Approved | Date | Approved | Date 05-05-06

ELECTRICAL

NW ALI BABA AVE. STATION ELECTRICAL PLATFORM PLAN

Scale SEE PLAN | Drawing EL-13 | Sheet 185

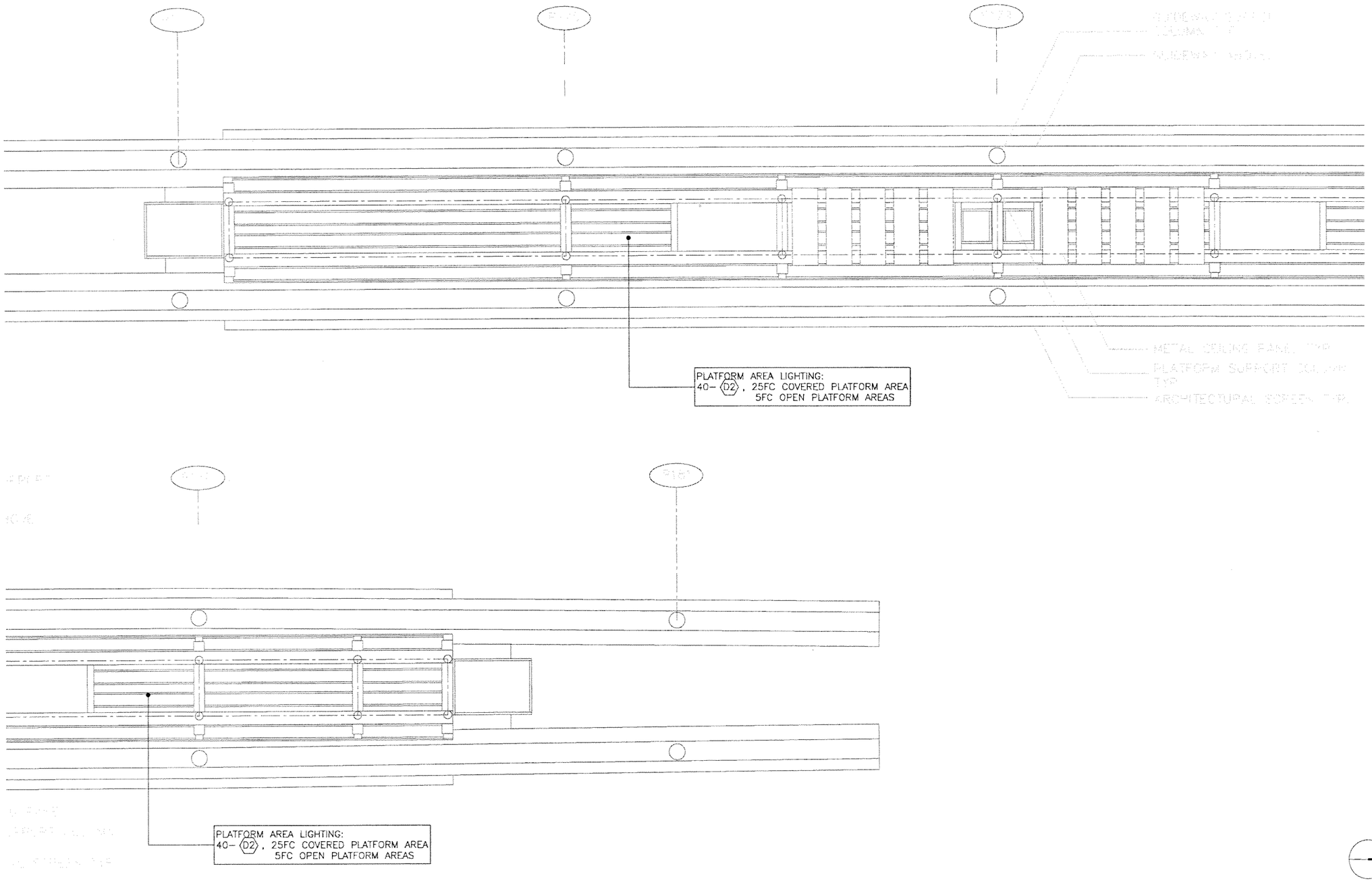

SUBJECT TO CHANGE

Designed by A.C. Date						
Drawn by B.L. Date						
Checked by A.C. Date						
A.C.						
Approved by Date	No.	Date	By / Chk	App.	Revisions	

NORTH CORRIDOR METRORAIL EXTENSION - PRELIMINARY ENGINEERING (100% SUBMITTAL)

MIAMI-DADE COUNTY

MIAMI-DADE TRANSIT

PARSONS
7600 CORPORATE CENTER DRIVE, SUITE 500
MIAMI, FLORIDA 33126
PHONE: (786) 464-1000 FAX: (786) 845-7119
CERTIFICATE OF AUTHORIZATION NO. 1838

H.J. ROSS
201 ALHAMBRA CIRCLE SUITE 900
CORAL GABLES, FLORIDA 33134
PHONE: (305) 567-1888 / FAX: (305) 567-1771
407

ELECTRICAL

NW ALI BABA AVE. STATION
ELECTRICAL
REFLECTED CEILING PLAN

Approved | Date | Approved | Date 05-05-06 | Scale SEE PLAN | Drawing EL-14 | Sheet 186

G:\550515 No... Corridor\NW 143 ST\Elec\SHT\EL-14.dwg, 5/12/2006 2:30:48 PM, blindholm

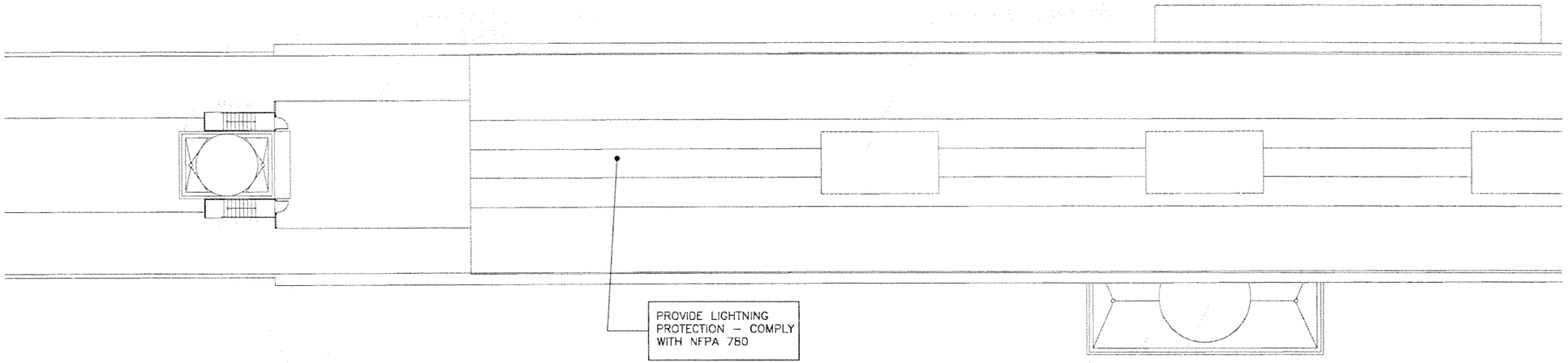

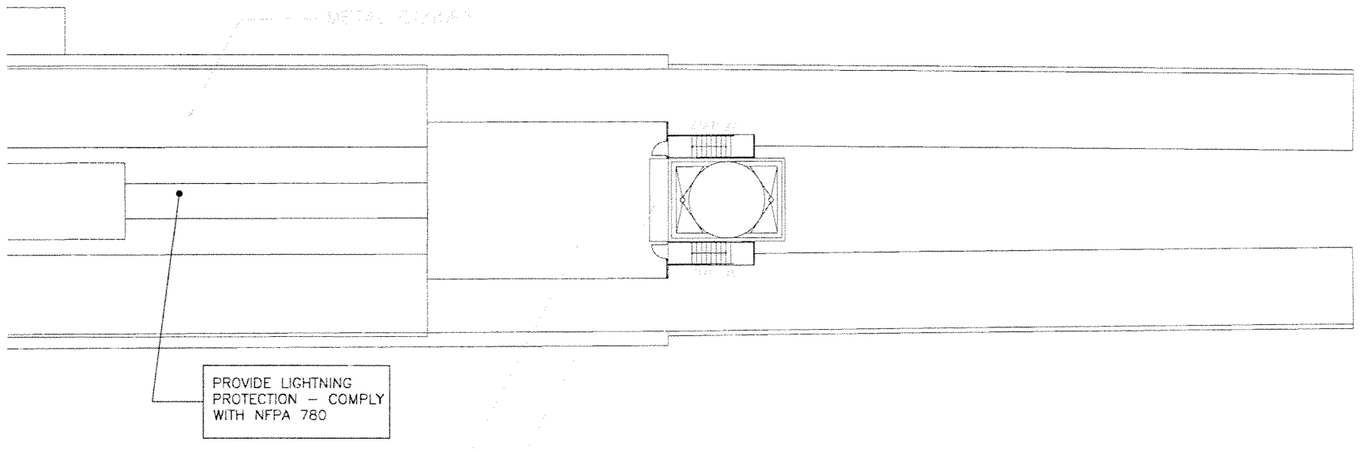

0 8 16 32

SCALE: 1/16" = 1'-0"

SUBJECT TO CHANGE

Designed by A.C. Date							
Drawn by B.L. Date							
Checked by A.C. Date							
A.C.							
Approved by Date	No.	Date	By / Chk	App.	Revisions		

NORTH CORRIDOR METRORAIL EXTENSION - PRELIMINARY ENGINEERING (100% SUBMITTAL)

MIAMI-DADE COUNTY

MIAMI-DADE TRANSIT

PARSONS
7500 CORPORATE CENTER DRIVE, SUITE 500
MIAMI, FLORIDA 33126
PHONE: (786) 464-1000 FAX: (786) 845-7119
CERTIFICATE OF AUTHORIZATION NO. 1838

H.J. ROSS
201 ALHAMBRA CIRCLE SUITE 900
CORAL GABLES, FLORIDA 33134
PHONE: (305) 567-1888 / FAX: (305) 567-1771
407

Approved | Date | Approved | Date 05-05-06

ELECTRICAL

NW ALI BABA AVE. STATION ELECTRICAL ROOF PLAN

Scale SEE PLAN | Drawing EL-15 | Sheet 187

G:\1550515 No... Corridor\NW 143 ST\Elec\SHTEL-15.dwg, 5/12/2006 2:30:53 PM, blindholm

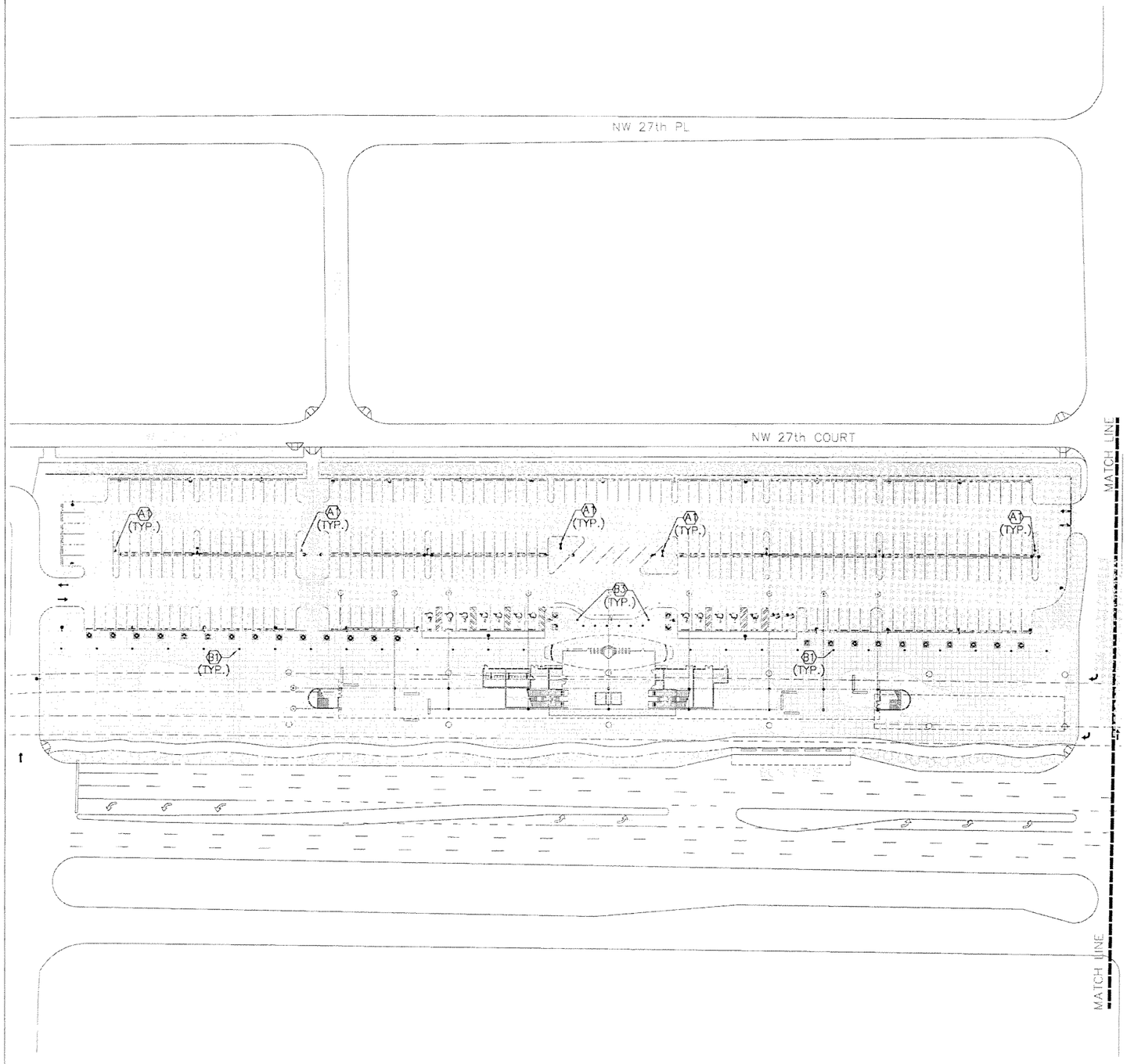

MARK	REFERENCE FIXTURE		LAMP		VOLT	MOUNTING	REMARKS
	MFG.	CATALOG NO.	TYPE	NO.			
A1	KIM	AC21X4/400 MHXX	400W MH	2	277	TWIN/POLE	30' MOUNTING HEIGHT (MT.HT.)
A2	KIM	AC21X4/400 MHXX	400W MH	1	277	SINGLE/POLE	30' MT.HT.
A3	KIM	AC21X4/250 MHXX	250W MH	2	277	TWIN/POLE	25' MT.HT.
A4	KIM	AC21X4/250 MHXX	250W MH	1	277	SINGLE/POLE	25' MT.HT.
B1	SPAULDING	CDS-H17-H3	175W MH	1	277	POLE/15'MT. HT.	TYPE III DIST.
B2	SPAULDING	CDS-MS17-H5	175W MH	1	277	POLE/ MT. HT.	TYPE V DIST.
B3	ARCHITECT AREA LIGHTING	CBR18-42-HORZ-175MH-DOME-XXX	175W MH	1	277	FLOOR	CONCRETE BOLLARD
C	KENNALL	MR17CD-PP-XX	100W MH	1	277	WALL/CEIL. MT.	ENTRANCE/PLATFORM/BUS SHELTER
D1	WINONA LIGHTING	P2-LSW-M400-XXX-LS4-SEW-X-STD	400W MH	1	277	SURFACE	ENTRANCE/PLATFORM CANOPY
D2	LOUIS POULSEN LIGHTING	ARP/1/150MH/XX/WIDE	150W MH	1	277	SUSPENSION TYPE	BUS SHELTER (HIGH CEILING)
D3	ARCHITECT AREA LIGHTING	CPH-250PSMH-XXX-SHD	250W MH	1	277	SURFACE	HIGH CEILING CANOPY
E	KIM	PGL51-175PMH	175W MH	1	277	SURFACE	PARKING GARAGE
F	KIM	LTV710-NF-175MH	175W MH	1	120	IN-GRADE	LANDSCAPE
G	COLUMBIA	LUN4-232-EB	F032 FLUOR.	2	277	SURFACE	JANITOR/ELEC/MECH/MAINT.
H	COLUMBIA	MLVL4-232EB8	F032 FLUOR.	2	277	CEILING	BATHROOMS (VANDAL RESISTANT)

0 25 50 100

SUBJECT TO CHANGE

Designed by A.C. Date
Drawn by B.L. Date
Checked by A.C. Date
Approved by A.C. Date

No.	Date	By / Chk	App.	Revisions

NORTH CORRIDOR METRORAIL EXTENSION - PRELIMINARY ENGINEERING (100% SUBMITTAL)

MIAMI-DADE COUNTY

MIAMI-DADE TRANSIT

PARSONS
7600 CORPORATE CENTER DRIVE, SUITE 500
MIAMI, FLORIDA 33126
PHONE: (786) 464-1000 FAX: (786) 845-7119
CERTIFICATE OF AUTHORIZATION NO. 1838

H.J. ROSS
201 ALHAMBRA CIRCLE SUITE 900
CORAL GABLES, FLORIDA 33134
PHONE: (305) 567-1888 / FAX: (305) 567-1771
407

Approved | Date | Approved | Date 05-05-06

ELECTRICAL

NW 163RD ST. STATION ELECTRICAL SITE PLAN

Scale 1" = 100' | Drawing EL-16 | Sheet 188

G:\550515 N... Corridor\NW 163 ST\Elec\SHT\EL-16.dwg, 5/15/2006 7:24:23 AM, blindholm

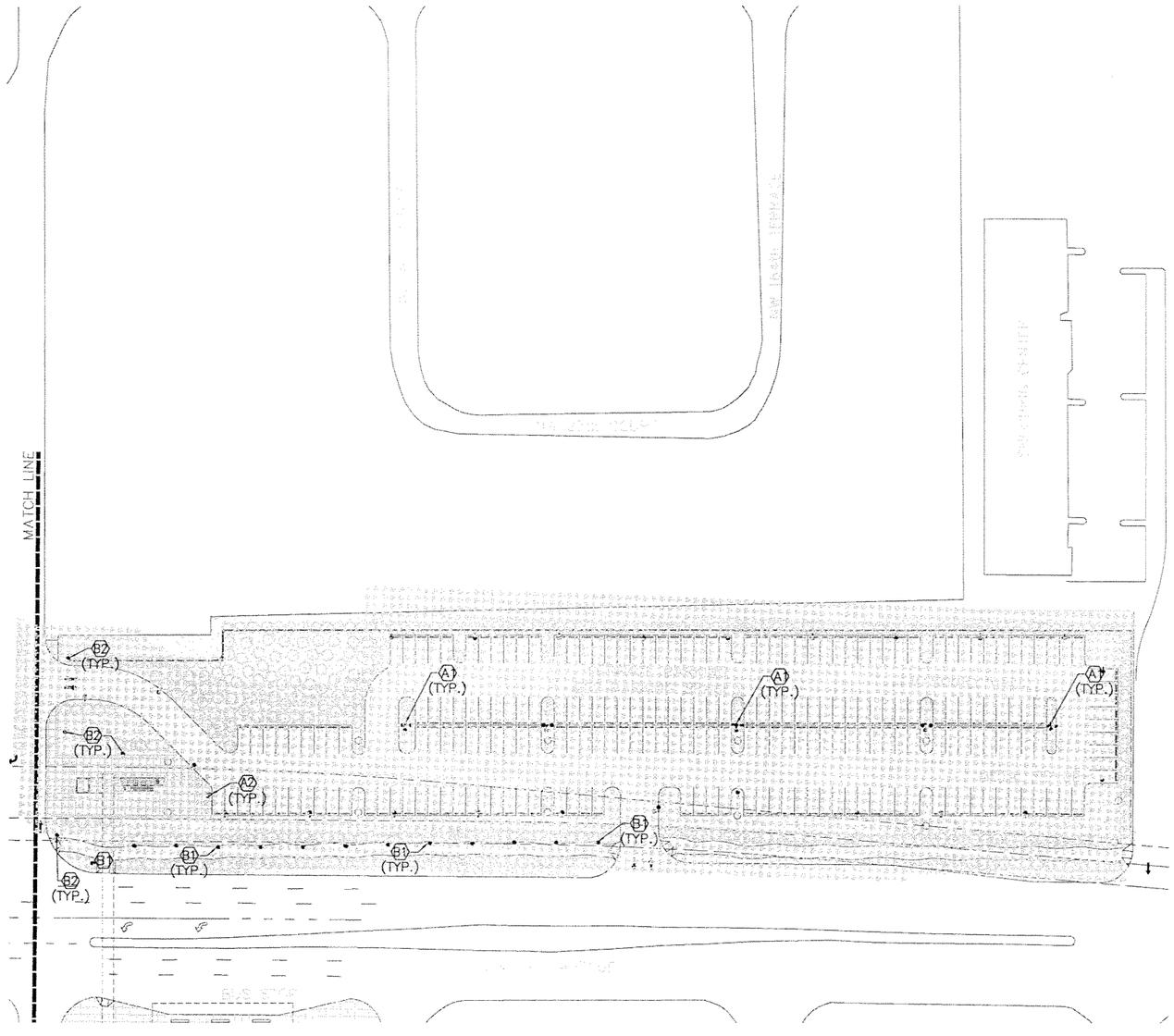

0 25 50 100

SUBJECT TO CHANGE

Designed by A.C. Date						NORTH CORRIDOR METRORAIL EXTENSION - PRELIMINARY ENGINEERING (100% SUBMITTAL)	ELECTRICAL
Drawn by B.L. Date							
Checked by A.C. Date							
A.C.							
Approved by Date	No.	Date	By / Chk	App.	Revisions		

MIAMI-DADE COUNTY — MIAMI-DADE TRANSIT

PARSONS
7600 CORPORATE CENTER DRIVE, SUITE 500
MIAMI, FLORIDA 33126
PHONE: (786) 464-1000 FAX: (786) 845-7119
CERTIFICATE OF AUTHORIZATION NO. 1838

H.J. ROSS
201 ALHAMBRA CIRCLE SUITE 900
CORAL GABLES, FLORIDA 33134
PHONE: (305) 567-1888 / FAX: (305) 567-1771
407

Approved	Date	Approved	Date	Scale	Drawing	Sheet
			05-05-06	1"=100'	EL-17	189

NW 163RD ST. STATION ELECTRICAL SITE PLAN-cont'd

G:\550515 No...\CorridorNW 163 ST\Elec\SHT\EL-17.dwg, 5/12/2006 2:47:52 PM, blindholm

POWER: CONTROL BOOTH,
SIGNAGE,GATES
LIGHTING: 3– (D1) & 6– (D2), 15FC
POWER: CCTV,PA.

ROOM WATTS: 1380
LIGHTING: 2– (G), 30FC
(AMBIENT) 75FC (TASK)
PROVIDE: ID,SD,FAD

POWER: 540
LIGHTING: 4– (G), 15FC

ROOM WATTS: 300
LIGHTING: 2– (G), 15FC
PROVIDE: FAD

ROOM WATTS: 2380
LIGHTING: 10– (G), 30FC
PROVIDE: ID,SD,CCTV,
EM.TEL.,FAD

ROOM WATTS: 280
LIGHTING: 2– (H), 20FC
PROVIDE: PA,FAD

ROOM WATTS: 1600
LIGHTING: 8– (G), 15FC
PROVIDE: ID,
SD,CCTV,EM.TEL.,FAD

ROOM WATTS: 3300
LIGHTING: 8– (G), 30FC
PROVIDE: FAD

ROOM WATTS: 370
LIGHTING: 10– (G), 30FC
PROVIDE: PA,ID,SD,FAD

ROOM WATTS: 16190
LIGHTING: 10– (G), 30FC
PROVIDE: ID,SD,CCTV,FACP,
FAD,PA,EM.TEL.

ROOM WATTS: 230
LIGHTING: 1– (G), 10FC
PROVIDE: FAD

LIGHTING:
4– (G), 20FC

LIGHTING:
8– (D3), 5FC

LIGHTING:
8– (D3), 5FC

POWER: 10HP
LIGHTING: 10– (D2)
PROVIDE: FAD

POWER: 10HP
LIGHTING: 10– (D2)
PROVIDE: FAD

LIGHTING:
4– (G), 20FC

ENCLOSED CONCOURSE
POWER: GFI/WP CONV. RECEPTS.
LESS THAN 100' APART
LIGHTING: 14– (D2)
PROVIDE: CCTV,PA,EM,TEL,PUBLIC
TEL,FAD

ROOM WATTS: 4130
LIGHTING: 1– (G), 10FC
PROVIDE: SD,ID,CCTV,PA,FAD

LANDSCAPE
LIGHTING: 4– (F)

LANDSCAPE
LIGHTING: 4– (F)

LANDSCAPE
LIGHTING: 4– (F)

LIGHTING: 5– (D1)
FIXTURES 2FC

ABBREVIATIONS:
INTRUSION DETECTION : ID
SECURITY DOORS: SD
PUBLIC ADDRESS SYSTEM: PA
CLOSED CIRCUIT TV SYSTEM: CCTV
FIRE ALARM CONTROL PANEL: FACP
FIRE ALARM DEVICE: FAD
EMERGENCY TELEPHONE: EM TEL.

0 10 20 40

SUBJECT TO CHANGE

Designed by A.C. Date
Drawn by B.L. Date
Checked by A.C. Date
A.C.
Approved by Date

No.	Date	By / Chk	App.	Revisions

NORTH CORRIDOR METRORAIL EXTENSION - PRELIMINARY ENGINEERING (100% SUBMITTAL)

MIAMI-DADE COUNTY

MIAMI-DADE TRANSIT

PARSONS
7600 CORPORATE CENTER DRIVE, SUITE 500
MIAMI, FLORIDA 33126
PHONE: (786) 464-1000 FAX: (786) 845-7119
CERTIFICATE OF AUTHORIZATION NO. 1838

Approved Date

H.J. ROSS
201 ALHAMBRA CIRCLE SUITE 900
CORAL GABLES, FLORIDA 33134
PHONE: (305) 567-1888 / FAX: (305) 567-1771
407

Approved Date 05-05-06

ELECTRICAL

NW 163RD ST. STATION
ELECTRICAL
PLAZA LEVEL PLAN

Scale 1" = 40' Drawing EL-18 Sheet 190

G:\550515 Nu... Corridor\NW 163 ST\Elec\SHT\EL-18.dwg, 5/12/2006 2:48:05 PM, blindholm

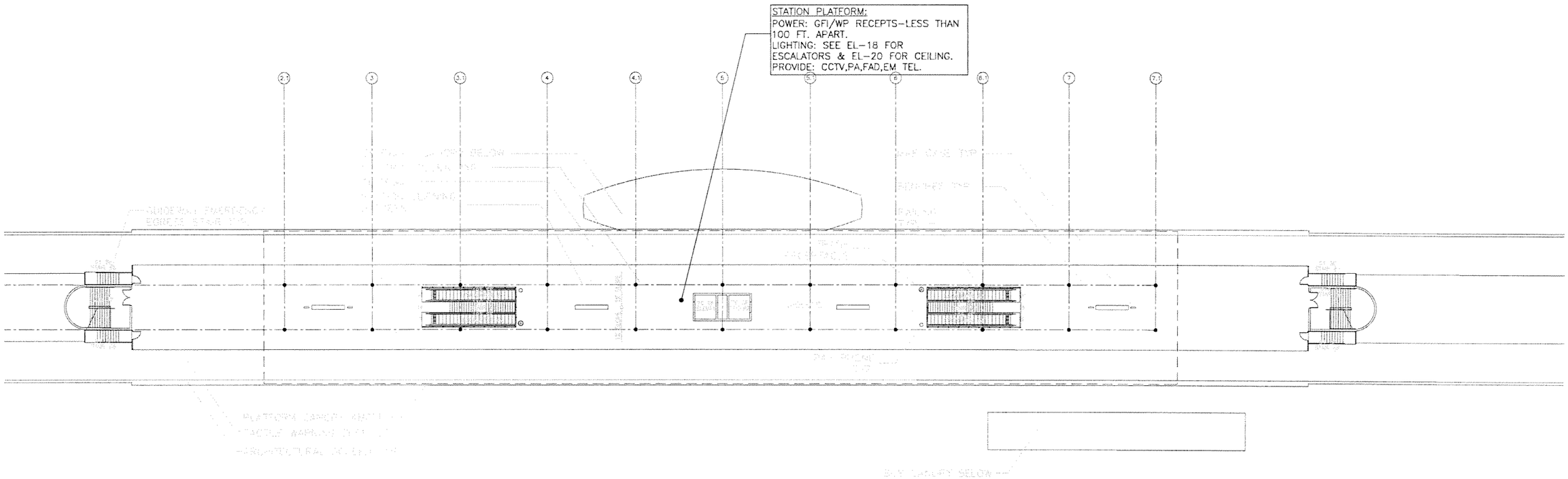

0 10 20 40

SUBJECT TO CHANGE

Designed by A.C. Date						
Drawn by B.L. Date						
Checked by A.C. Date						
A.C.						
Approved by Date	No.	Date	By / Chk	App.	Revisions	

NORTH CORRIDOR METRORAIL EXTENSION - PRELIMINARY ENGINEERING (100% SUBMITTAL)

MIAMI-DADE COUNTY

MIAMI-DADE TRANSIT

PARSONS
7600 CORPORATE CENTER DRIVE, SUITE 500
MIAMI, FLORIDA 33126
PHONE: (786) 464-1000 FAX: (786) 845-7119
CERTIFICATE OF AUTHORIZATION NO. 1838

H.J. ROSS
201 ALHAMBRA CIRCLE SUITE 900
CORAL GABLES, FLORIDA 33134
PHONE: (305) 567-1888 / FAX: (305) 567-1771
407

ELECTRICAL

NW 163RD ST. STATION
ELECTRICAL
PLATFORM LEVEL PLAN

Approved | Date | Approved | Date 05-05-06 | Scale 1"=40' | Drawing EL-19 | Sheet 191

G:\550515 No... Corridor\NW 163 ST\Elec\SHT\EL-19.dwg, 5/12/2006 2:48:14 PM, blindholm

PLATFORM AREA LIGHTING:
40– ⟨D2⟩, 25FC COVERED PLATFORM AREA
5FC OPEN PLATFORM AREAS

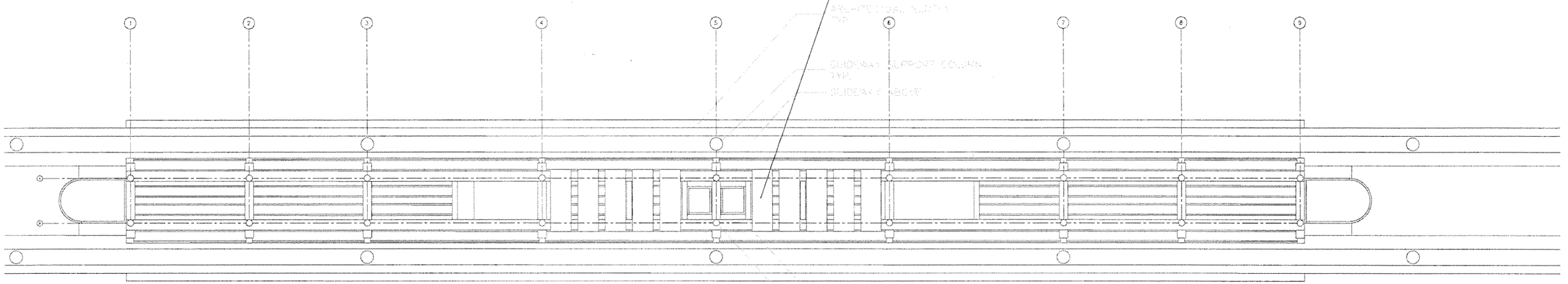

0 10 20 40

SUBJECT TO CHANGE

Designed by A.C. Date						NORTH CORRIDOR METRORAIL EXTENSION - PRELIMINARY ENGINEERING (100% SUBMITTAL)	ELECTRICAL
Drawn by B.L. Date							
Checked by A.C. Date							
A.C.							
Approved by Date	No.	Date	By / Chk	App.	Revisions		

MIAMI-DADE COUNTY
MIAMI-DADE TRANSIT

PARSONS
7600 CORPORATE CENTER DRIVE, SUITE 500
MIAMI, FLORIDA 33126
PHONE: (786) 464-1000 FAX: (786) 845-7119
CERTIFICATE OF AUTHORIZATION NO. 1838
Approved Date

H.J. ROSS
201 ALHAMBRA CIRCLE SUITE 900
CORAL GABLES, FLORIDA 33134
PHONE: (305) 567-1888 / FAX: (305) 567-1771
407
Approved Date 05-05-06

NW 163RD ST. STATION
ELECTRICAL
REFLECTED CEILING PLAN

Scale 1"=40' Drawing EL-20 Sheet 192

G:\550515 No... Corridor\NW 163 ST\Elec\SHT\EL-20.dwg, 5/12/2006 2:48:18 PM, blindholm

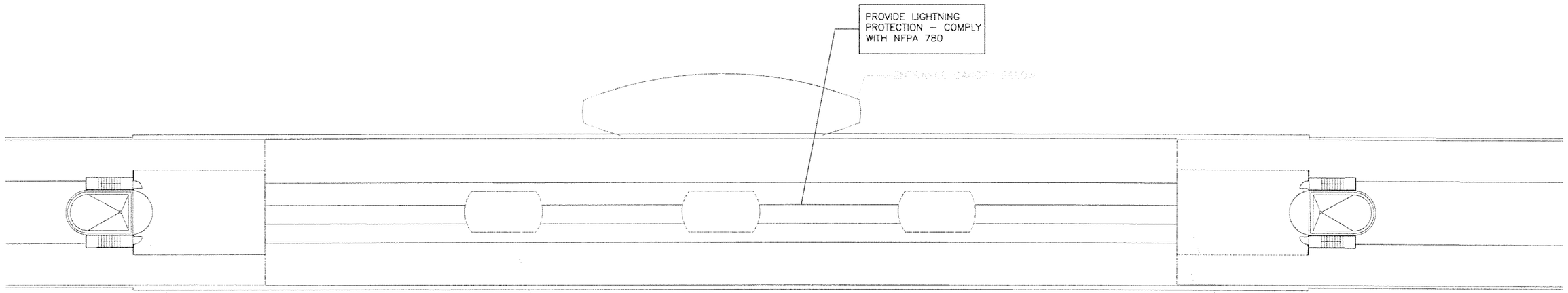

0 10 20 40

SUBJECT TO CHANGE

Designed by A.C. Date						NORTH CORRIDOR METRORAIL EXTENSION - PRELIMINARY ENGINEERING (100% SUBMITTAL)	ELECTRICAL
Drawn by B.L. Date						MIAMI-DADE COUNTY / MIAMI-DADE TRANSIT	NW 163RD ST. STATION ELECTRICAL ROOF LEVEL PLAN
Checked by A.C. Date						PARSONS 7600 CORPORATE CENTER DRIVE, SUITE 500 MIAMI, FLORIDA 33126 PHONE: (786) 464-1000 FAX: (786) 845-7119 CERTIFICATE OF AUTHORIZATION NO. 1838	H.J. ROSS 201 ALHAMBRA CIRCLE SUITE 900 CORAL GABLES, FLORIDA 33134 PHONE: (305) 567-1888 / FAX: (305) 567-1771 407
A.C. Approved by Date	No.	Date	By / Chk	App.	Revisions	Approved Date	Approved Date 05-05-06
						$DATE$ $TIME$ $TIME$	Scale 1" = 40' Drawing EL-21 Sheet 93

G:\550515 NC...Corridor\NW 163 ST\Elec\SHT\EL-21.dwg, 5/12/2006 2:48:23 PM, blindholm

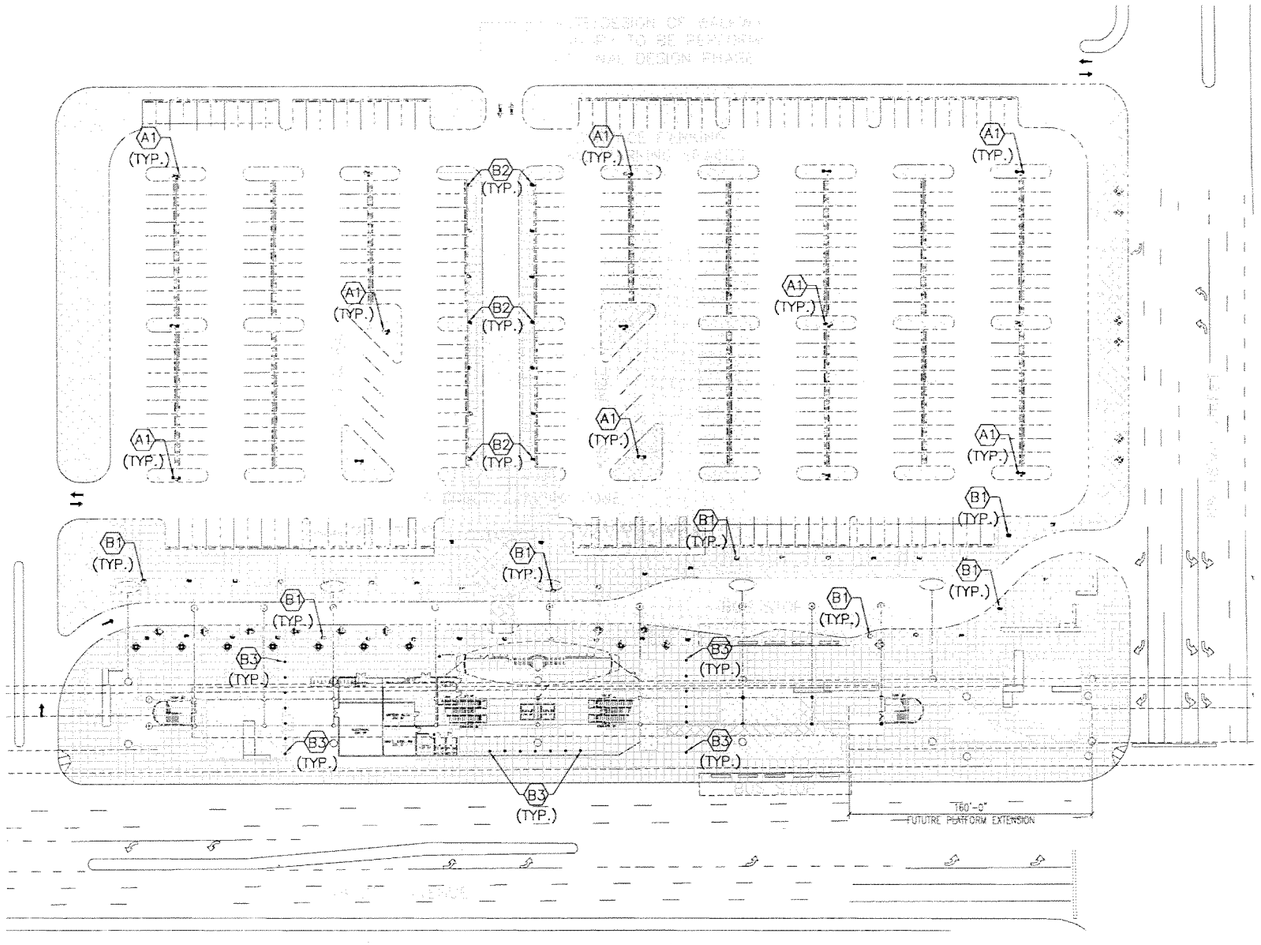

MARK	REFERENCE FIXTURE		LAMP		VOLT	MOUNTING	REMARKS
	MFG.	CATALOG NO.	TYPE	NO.			
A1	KIM	AC21X4/400 MHXX	400W MH	2	277	TWIN/POLE	30' MOUNTING HEIGHT (MT.HT.)
A2	KIM	AC21X4/400 MHXX	400W MH	1	277	SINGLE/POLE	30' MT.HT.
A3	KIM	AC21X4/250 MHXX	250W MH	2	277	TWIN/POLE	25' MT.HT.
A4	KIM	AC21X4/250 MHXX	250W MH	1	277	SINGLE/POLE	25' MT.HT.
B1	SPAULDING	CDS-H17-H3	175W MH	1	277	POLE/15'MT. HT.	TYPE III DIST.
B2	SPAULDING	CDS-MS17-H5	175W MH	1	277	POLE/ MT. HT.	TYPE V DIST.
B3	ARCHITECT AREA LIGHTING	CBR18-42-HORZ-175MH-DOME-XXX	175W MH	1	277	FLOOR	CONCRETE BOLLARD
C	KENNALL	MR17CD-PP-XX	100W MH	1	277	WALL/CEIL. MT.	ENTRANCE/PLATFORM/BUS SHELTER
D1	WINONA LIGHTING	P2-LSW-M400-XXX-LS4-SEW-X-STD	400W MH	1	277	SURFACE	ENTRANCE/PLATFORM CANOPY
D2	LOUIS POULSEN LIGHTING	ARP/1/150MH/XX/WIDE	150W MH	1	277	SUSPENSION TYPE	BUS SHELTER (HIGH CEILING)
D3	ARCHITECT AREA LIGHTING	CPH-250PSMH-XXX-SHD	250W MH	1	277	SURFACE	HIGH CEILING CANOPY
E	KIM	PGL51-175PMH	175W MH	1	277	SURFACE	PARKING GARAGE
F	KIM	LTV710-NF-175MH	175W MH	1	120	IN-GRADE	LANDSCAPE
G	COLUMBIA	LUN4-232-EB	F032 FLUOR.	2	277	SURFACE	JANITOR/ELEC/MECH/MAINT.
H	COLUMBIA	MLVL4-232EB8	F032 FLUOR.	2	277	CEILING	BATHROOMS (VANDAL RESISTANT)

0 25 50 100

SUBJECT TO CHANGE

Designed by A.C. Date
Drawn by B.L. Date
Checked by A.C. Date
A.C.
Approved by Date

No.	Date	By / Chk	App.	Revisions

NORTH CORRIDOR METRORAIL EXTENSION - PRELIMINARY ENGINEERING (100% SUBMITTAL)

MIAMI-DADE COUNTY

MIAMI-DADE TRANSIT

PARSONS
7600 CORPORATE CENTER DRIVE, SUITE 500
MIAMI, FLORIDA 33126
PHONE: (786) 464-1000 FAX: (786) 845-7119
CERTIFICATE OF AUTHORIZATION NO. 1838

Approved Date

H.J. ROSS
201 ALHAMBRA CIRCLE SUITE 900
CORAL GABLES, FLORIDA 33134
PHONE: (305) 567-1888 / FAX: (305) 567-1771
407

Approved Date 05-05-06

ELECTRICAL

NW 183RD ST. STATION ELECTRICAL SITE PLAN

Scale 1" = 100' Drawing EL-22 Sheet 194

G:\550515 No... Corridor\NW 183 ST\Elec\SHT\EL-22.dwg, 5/12/2006 3:23:32 PM, blindholm

LANDSCAPE
LIGHTING: 4– (F)

POWER: CONTROL BOOTH,
SIGNAGE,GATES
LIGHTING: 3– (D1) & 6– (D2) , 15FC
POWER: CCTV,PA

ROOM WATTS: 16190
LIGHTING: 10– (G), 30FC
PROVIDE: ID,SD,CCTV,FACP,
FAD,PA,EM.TEL.

ROOM WATTS: 1690
LIGHTING: 4– (G), 30FC
(AMBIENT) 75FC (TASK)
PROVIDE: ID,SD,FAD

ENCLOSED CONCOURSE
POWER: GFI/WP CONV. RECEPTS.
LESS THAN 100' APART
LIGHTING: 12– (D2)
PROVIDE: CCTV,PA,EM,TEL,PUBLIC
TEL,FAD

LANDSCAPE
LIGHTING: 2– (F)

ROOM WATTS: 3300
LIGHTING: 8– (G), 30FC
PROVIDE: FAD

ROOM WATTS: 300
LIGHTING: 2– (G), 15FC
PROVIDE: FAD

ROOM WATTS: 1380
LIGHTING: 8– (G), 15FC
PROVIDE: ID,
SD,CCTV,EM.TEL.,FAD

LANDSCAPE
LIGHTING: 4– (F)

LIGHTING: 5– (D1)
FIXTURES 2FC

LIGHTING:
4– (G), 20FC

LIGHTING:
4– (G), 20FC

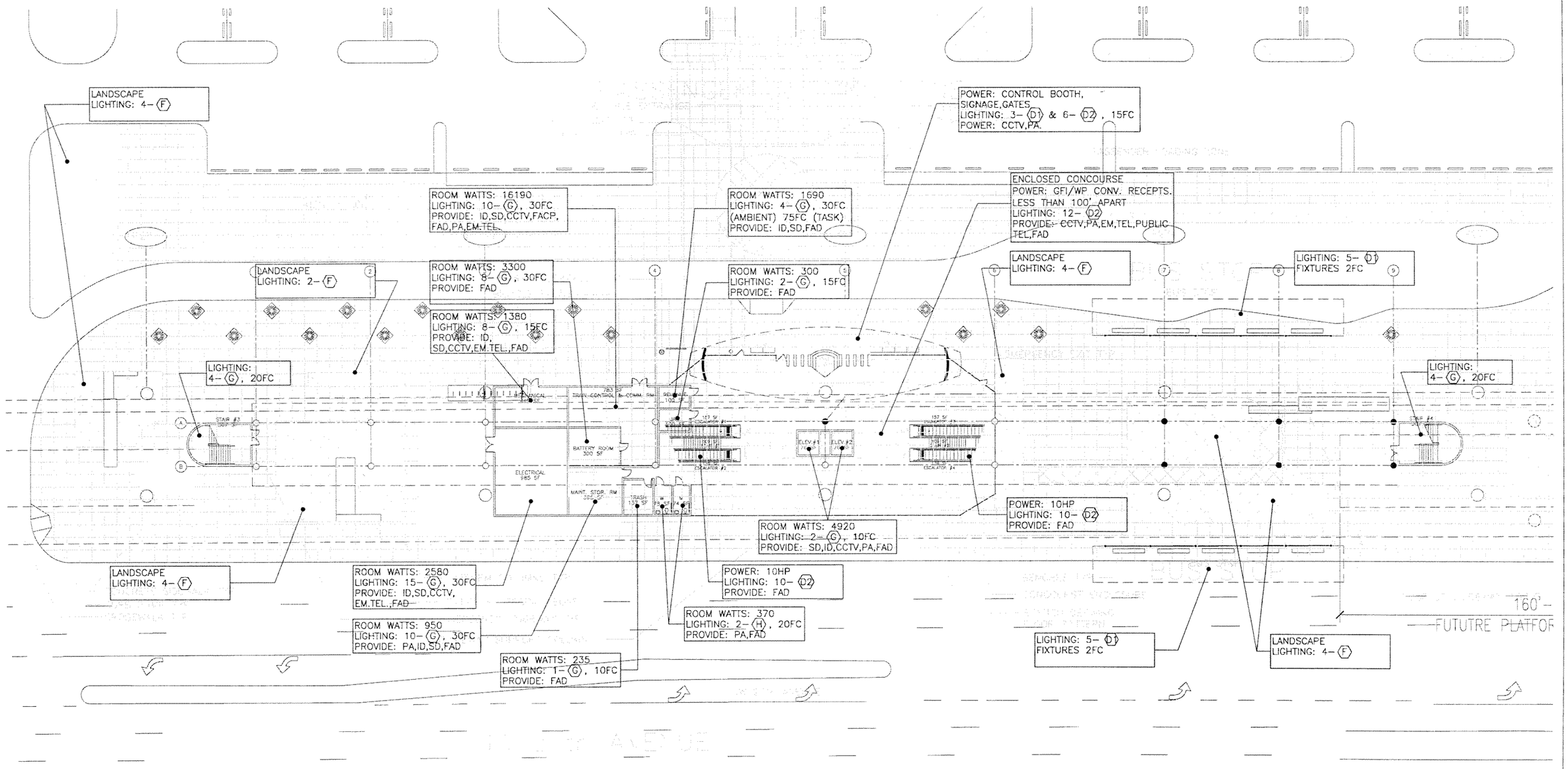

POWER: 10HP
LIGHTING: 10– (D2)
PROVIDE: FAD

ROOM WATTS: 4920
LIGHTING: 2– (G), 10FC
PROVIDE: SD,ID,CCTV,PA,FAD

LANDSCAPE
LIGHTING: 4– (F)

ROOM WATTS: 2580
LIGHTING: 15– (G), 30FC
PROVIDE: ID,SD,CCTV,
EM.TEL.,FAD

POWER: 10HP
LIGHTING: 10– (D2)
PROVIDE: FAD

ROOM WATTS: 370
LIGHTING: 2– (H), 20FC
PROVIDE: PA,FAD

ROOM WATTS: 950
LIGHTING: 10– (G), 30FC
PROVIDE: PA,ID,SD,FAD

ROOM WATTS: 235
LIGHTING: 1– (G), 10FC
PROVIDE: FAD

LIGHTING: 5– (D1)
FIXTURES 2FC

LANDSCAPE
LIGHTING: 4– (F)

ABBREVIATIONS:
INTRUSION DETECTION : ID
SECURITY DOORS: SD
PUBLIC ADDRESS SYSTEM: PA
CLOSED CIRCUIT TV SYSTEM: CCTV
FIRE ALARM CONTROL PANEL: FACP
FIRE ALARM DEVICE: FAD
EMERGENCY TELEPHONE: EM TEL.

0 10 20 40

SUBJECT TO CHANGE

Designed by A.C. Date
Drawn by B.L. Date
Checked by A.C. Date
A.C.
Approved by Date

No.	Date	By / Chk	App.	Revisions

NORTH CORRIDOR METRORAIL EXTENSION - PRELIMINARY ENGINEERING (100% SUBMITTAL)

MIAMI-DADE COUNTY

MIAMI-DADE TRANSIT

PARSONS
7600 CORPORATE CENTER DRIVE, SUITE 500
MIAMI, FLORIDA 33126
PHONE: (786) 464-1000 FAX: (786) 845-7119
CERTIFICATE OF AUTHORIZATION NO. 1638

Approved Date

H.J. ROSS
201 ALHAMBRA CIRCLE SUITE 900
CORAL GABLES, FLORIDA 33134
PHONE: (305) 567-1888 / FAX: (305) 567-1771
407

Approved Date 05-05-06

ELECTRICAL

NW 183RD ST. STATION
ELECTRICAL
PLAZA LEVEL PLAN

Scale 1"=40' Drawing EL-23 Sheet 195

G:\550515 No...\Corridor\NW 183 ST\Elec\SHT\EL-23.dwg, 5/12/2006 3:23:43 PM, blindholm

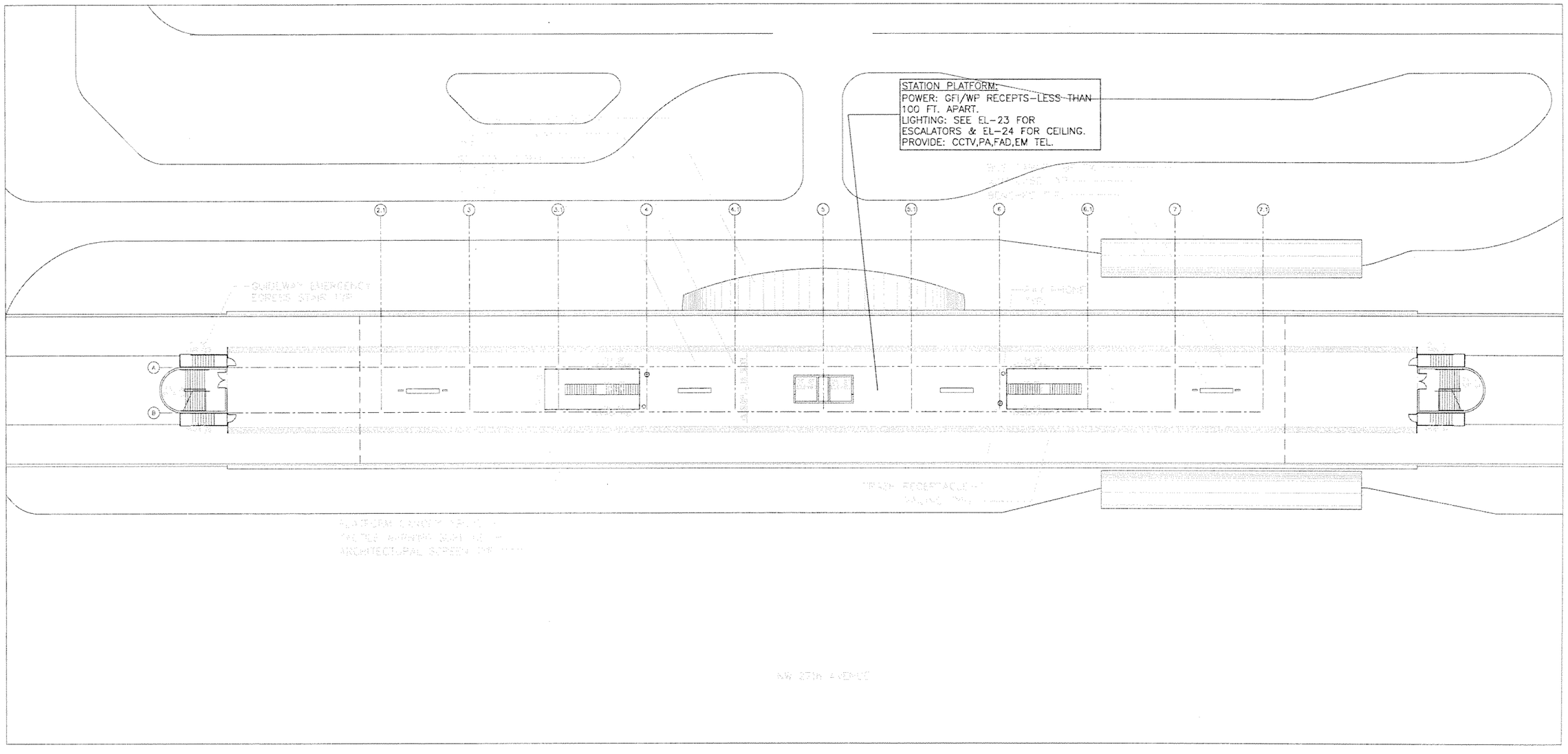

0 10 20 40

SUBJECT TO CHANGE

Designed by A.C. Date							
Drawn by B.I. Date							
Checked by A.C. Date							
A.C. Approved by Date	No.	Date	By / Chk	App.	Revisions		

NORTH CORRIDOR METRORAIL EXTENSION - PRELIMINARY ENGINEERING (100% SUBMITTAL)

MIAMI-DADE COUNTY

MIAMI-DADE TRANSIT

PARSONS
7600 CORPORATE CENTER DRIVE, SUITE 500
MIAMI, FLORIDA 33126
PHONE: (786) 464-1000 FAX: (786) 845-7119
CERTIFICATE OF AUTHORIZATION NO. 1838

Approved | Date

H.J. ROSS
201 ALHAMBRA CIRCLE SUITE 900
CORAL GABLES, FLORIDA 33134
PHONE: (305) 567-1888 / FAX: (305) 567-1771
407

Approved | Date 05-05-06

ELECTRICAL

NW 183RD ST. STATION ELECTRICAL PLATFORM PLAN

Scale 1"=40' | Drawing EL-24 | Sheet 196

G:\550515 No... Corridor\NW 183 ST\Elec\SHT\EL-24.dwg, 5/12/2006 3:23:50 PM, blindholm

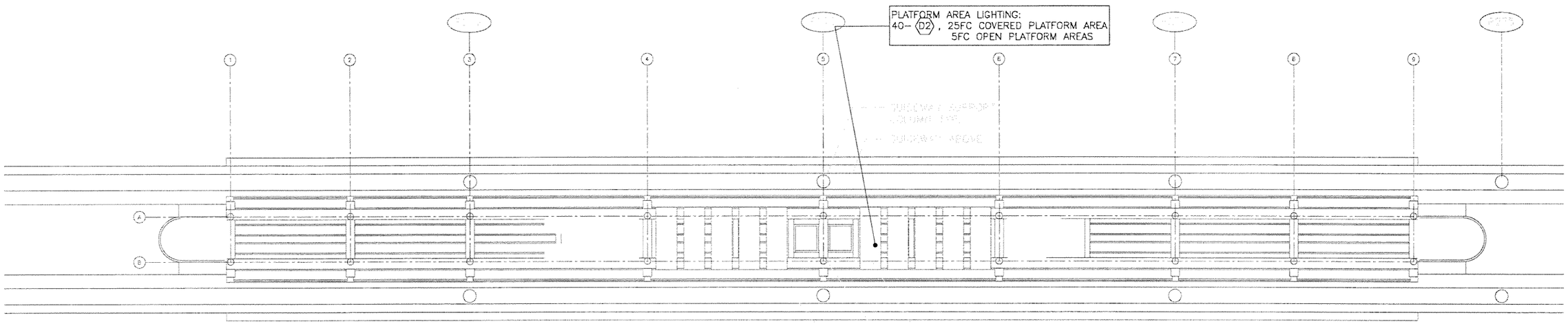

0 10 20 40

SUBJECT TO CHANGE

Designed by A.C. Date						NORTH CORRIDOR METRORAIL EXTENSION - PRELIMINARY ENGINEERING (100% SUBMITTAL)	ELECTRICAL
Drawn by B.L. Date						MIAMI-DADE COUNTY / MIAMI-DADE TRANSIT	PARSONS 7600 CORPORATE CENTER DRIVE, SUITE 500 MIAMI, FLORIDA 33126 PHONE: (786) 464-1000 FAX: (786) 845-7119 CERTIFICATE OF AUTHORIZATION NO. 1838	H.J. ROSS 201 ALHAMBRA CIRCLE SUITE 900 CORAL GABLES, FLORIDA 33134 PHONE: (305) 567-1888 / FAX: (305) 567-1771 407	NW 183RD ST. STATION ELECTRICAL REFLECTED CEILING PLAN
Checked by A.C. Date									
A.C.									
Approved by Date	No.	Date	By / Chk	App.	Revisions		Approved Date	Approved Date 05-05-06	Scale 1"=40' Drawing EL-25 Sheet 197

G:\550515 No...Corridor\NW 183 ST\Elec\SHT\EL-25.dwg, 5/12/2006 3:23:55 PM, blindholm

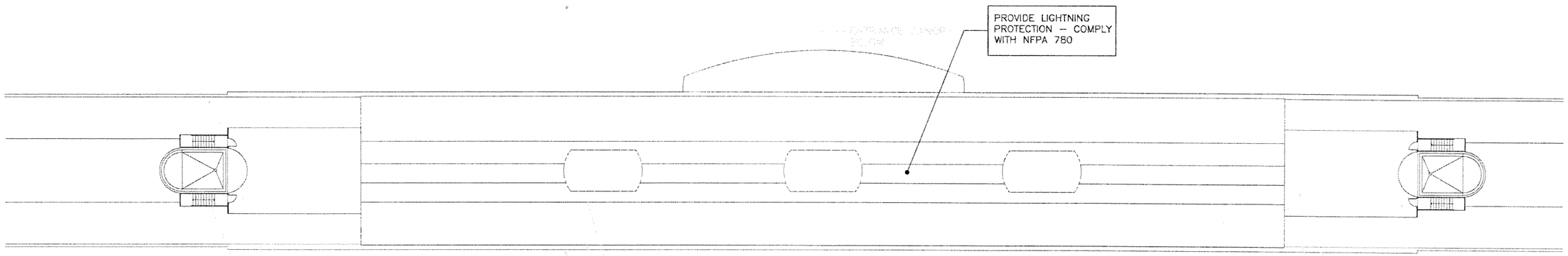

0 10 20 40

SUBJECT TO CHANGE

Designed by A.C. Date					
Drawn by B.L. Date					
Checked by A.C. Date					
A.C.					
Approved by Date	No.	Date	By / Chk	App.	Revisions

NORTH CORRIDOR METRORAIL EXTENSION - PRELIMINARY ENGINEERING (100% SUBMITTAL)

MIAMI-DADE COUNTY

MIAMI-DADE TRANSIT

PARSONS
7600 CORPORATE CENTER DRIVE, SUITE 500
MIAMI, FLORIDA 33126
PHONE: (786) 464-1000 FAX: (786) 845-7119
CERTIFICATE OF AUTHORIZATION NO. 1838

H.J. ROSS
201 ALHAMBRA CIRCLE SUITE 900
CORAL GABLES, FLORIDA 33134
PHONE: (305) 567-1888 / FAX: (305) 567-1771
407

Approved | Date | Approved | Date 05-05-06

ELECTRICAL

NW 183RD ST. STATION
ELECTRICAL
ROOF PLAN

Scale 1"=40' | Drawing EL-26 | Sheet 198

G:\550515 N... Corridor\NW 183 ST\Elec\SHT\EL-26.dwg, 5/12/2006 3:24:01 PM, blindholm

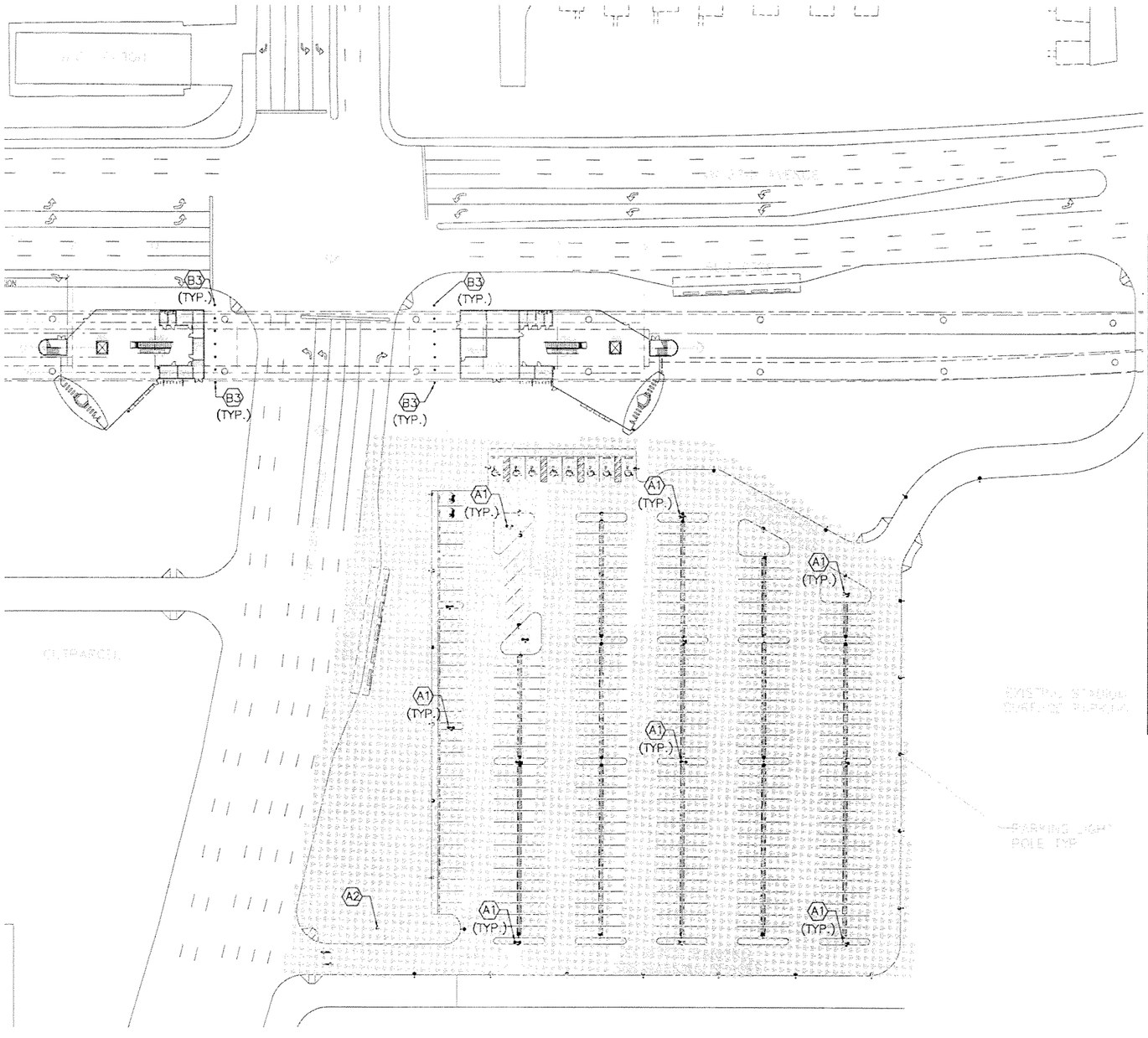

MARK	REFERENCE FIXTURE		LAMP		VOLT	MOUNTING	REMARKS
	MFG.	CATALOG NO.	TYPE	NO.			
A1	KIM	AC21X4/400 MHXX	400W MH	2	277	TWIN/POLE	30' MOUNTING HEIGHT (MT.HT.)
A2	KIM	AC21X4/400 MHXX	400W MH	1	277	SINGLE/POLE	30' MT.HT.
A3	KIM	AC21X4/250 MHXX	250W MH	2	277	TWIN/POLE	25' MT.HT.
A4	KIM	AC21X4/250 MHXX	250W MH	1	277	SINGLE/POLE	25' MT.HT.
B1	SPAULDING	CDS-H17-H3	175W MH	1	277	POLE/15'MT. HT.	TYPE III DIST.
B2	SPAULDING	CDS-MS17-H5	175W MH	1	277	POLE/ MT. HT.	TYPE V DIST.
B3	ARCHITECT AREA LIGHTING	CBR18-42-HORZ-175MH-DOME-XXX	175W MH	1	277	FLOOR	CONCRETE BOLLARD
C	KENNALL	MR17CD-PP-XX	100W MH	1	277	WALL/CEIL. MT.	ENTRANCE/PLATFORM/BUS SHELTER
D1	WINONA LIGHTING	P2-LSW-M400-XXX-LS4-SEW-X-STD	400W MH	1	277	SURFACE	ENTRANCE/PLATFORM CANOPY
D2	LOUIS POULSEN LIGHTING	ARP/1/150MH/XX/WIDE	150W MH	1	277	SUSPENSION TYPE	BUS SHELTER (HIGH CEILING)
D3	ARCHITECT AREA LIGHTING	CPH-250PSMH-XXX-SHD	250W MH	1	277	SURFACE	HIGH CEILING CANOPY
E	KIM	PGL51-175PMH	175W MH	1	277	SURFACE	PARKING GARAGE
F	KIM	LTV710-NF-175MH	175W MH	1	120	IN-GRADE	LANDSCAPE
G	COLUMBIA	LUN4-232-EB	F032 FLUOR.	2	277	SURFACE	JANITOR/ELEC/MECH/MAINT.
H	COLUMBIA	MLVL4-232EB8	F032 FLUOR.	2	277	CEILING	BATHROOMS (VANDAL RESISTANT)

0 25 50 100

SUBJECT TO CHANGE

Designed by A.C. Date
Drawn by B.L. Date
Checked by A.C. Date
A.C.
Approved by Date

No.	Date	By / Chk	App.	Revisions

NORTH CORRIDOR METRORAIL EXTENSION - PRELIMINARY ENGINEERING (100% SUBMITTAL)

MIAMI-DADE COUNTY

MIAMI-DADE TRANSIT

PARSONS
7600 CORPORATE CENTER DRIVE, SUITE 500
MIAMI, FLORIDA 33126
PHONE: (786) 464-1000 FAX: (786) 845-7119
CERTIFICATE OF AUTHORIZATION NO. 1838

H.J. ROSS
201 ALHAMBRA CIRCLE SUITE 900
CORAL GABLES, FLORIDA 33134
PHONE: (305) 567-1888 / FAX: (305) 567-1771
407

Approved | Date | Approved | Date 05-05-06

ELECTRICAL

NW 199TH ST. STATION ELECTRICAL SITE PLAN

Scale 1" = 100' | Drawing EL-27 | Sheet 199

G:\550515 N... .Corridor\NW 199 ST\Elec\SHTNEL-27.dwg, 5/12/2006 3:28:43 PM, blindholm

ENCLOSED CONCOURSE
POWER: GFI/WP CONV. RECEPTS.
LESS THAN 100' APART
LIGHTING: 8– (D2)
PROVIDE: CCTV,PA,EM,TEL,PUBLIC TEL,FAD

ROOM WATTS: 330
LIGHTING: 2– (H), 20FC
PROVIDE: PA,FAD

POWER: 10HP
LIGHTING: 10– (D2)
PROVIDE: FAD

ROOM WATTS: 200
LIGHTING: 1– (G), 15FC
PROVIDE: FAD

ROOM WATTS: 1500
LIGHTING: 8– (G), 15FC
PROVIDE: ID, SD,CCTV,EM.TEL.,FAD

60'–0"
TFORM EXTENSION

LANDSCAPE
LIGHTING: 4– (F)

LIGHTING:
4– (G), 20FC

ROOM WATTS: 260
LIGHTING: 2– (G), 30FC
PROVIDE: PA,ID,SD,FAD

ROOM WATTS: 1560
LIGHTING: 8– (G), 30FC
PROVIDE: ID,SD,CCTV, EM.TEL.,FAD

ROOM WATTS: 4160
LIGHTING: 1– (G), 10FC
PROVIDE: SD,ID,CCTV,PA,FAD

ROOM WATTS: 180
LIGHTING: 1– (G), 10FC
PROVIDE: FAD

ROOM WATTS: 2230
LIGHTING: 4– (G), 30FC
(AMBIENT) 75FC (TASK)
PROVIDE: ID,SD,FAD

POWER: CONTROL BOOTH,
SIGNAGE,GATES
LIGHTING: 3– (D1) & 6– (D2), 15FC
POWER: CCTV,PA.

LANDSCAPE
LIGHTING: 8– (F)

ROOM WATTS: 200
LIGHTING: 1– (G), 15FC
PROVIDE: FAD

ROOM WATTS: 1560
LIGHTING: 8– (G), 30FC
PROVIDE: ID,SD,CCTV, EM.TEL.,FAD

ROOM WATTS: 1500
LIGHTING: 8– (G), 15FC
PROVIDE: ID, SD,CCTV,EM.TEL.,FAD

ROOM WATTS: 3300
LIGHTING: 8– (G), 30FC
PROVIDE: FAD

ROOM WATTS: 18500
LIGHTING: 16– (G), 30FC
PROVIDE: ID,SD,CCTV,FACP, FAD,PA,EM.TEL.

ENCLOSED CONCOURSE
POWER: GFI/WP CONV. RECEPTS.
LESS THAN 100' APART
LIGHTING: 8– (D2)
PROVIDE: CCTV,PA,EM,TEL,PUBLIC TEL,FAD

ROOM WATTS: 260
LIGHTING: 2– (G), 15FC
PROVIDE: FAD

LIGHTING: 5– (D1)
FIXTURES 2FC

ROOM WATTS: 330
LIGHTING: 2– (H), 20FC
PROVIDE: PA,FAD

LIGHTING:
4– (G), 20FC

POWER: 10HP
LIGHTING: 10– (D2)
PROVIDE: FAD

ROOM WATTS: 4160
LIGHTING: 1– (G), 10FC
PROVIDE: SD,ID,CCTV,PA,FAD

ROOM WATTS: 2230
LIGHTING: 4– (G), 30FC
(AMBIENT) 75FC (TASK)
PROVIDE: ID,SD,FAD

ROOM WATTS: 180
LIGHTING: 1– (G), 10FC
PROVIDE: FAD

LANDSCAPE
LIGHTING: 4– (F)

POWER: CONTROL BOOTH,
SIGNAGE,GATES
LIGHTING: 3– (D1) & 6– (D2), 15FC
POWER: CCTV,PA.

SURFACE PARKING 340
PARKING SPACES

ABBREVIATIONS:
INTRUSION DETECTION : ID
SECURITY DOORS: SD
PUBLIC ADDRESS SYSTEM: PA
CLOSED CIRCUIT TV SYSTEM: CCTV
FIRE ALARM CONTROL PANEL: FACP
FIRE ALARM DEVICE: FAD
EMERGENCY TELEPHONE: EM TEL.

0 10 20 40

SUBJECT TO CHANGE

G:\550515 I Corridor\NW 199 ST\Elec\SHTEL-28.dwg, 5/12/2006 3:28:54 PM, blindholm

Designed by A.C.	Date					
Drawn by B.L.	Date					
Checked by A.C.	Date					
A.C.						
Approved by	Date	No.	Date	By Chk	App.	Revisions

NORTH CORRIDOR METRORAIL EXTENSION - PRELIMINARY ENGINEERING (100% SUBMITTAL)

MIAMI-DADE COUNTY

MIAMI-DADE TRANSIT

PARSONS
7600 CORPORATE CENTER DRIVE, SUITE 500
MIAMI, FLORIDA 33126
PHONE: (786) 464-1000 FAX: (786) 845-7119
CERTIFICATE OF AUTHORIZATION NO. 1838

H.J. ROSS
201 ALHAMBRA CIRCLE SUITE 900
CORAL GABLES, FLORIDA 33134
PHONE: (305) 567-1888 / FAX: (305) 567-1771
407

Approved	Date	Approved	Date	Scale	Drawing	Sheet
			05-05-06	1" = 40'	EL-28	200

ELECTRICAL

NW 199TH ST. STATION ELECTRICAL PLAZA LEVEL PLAN

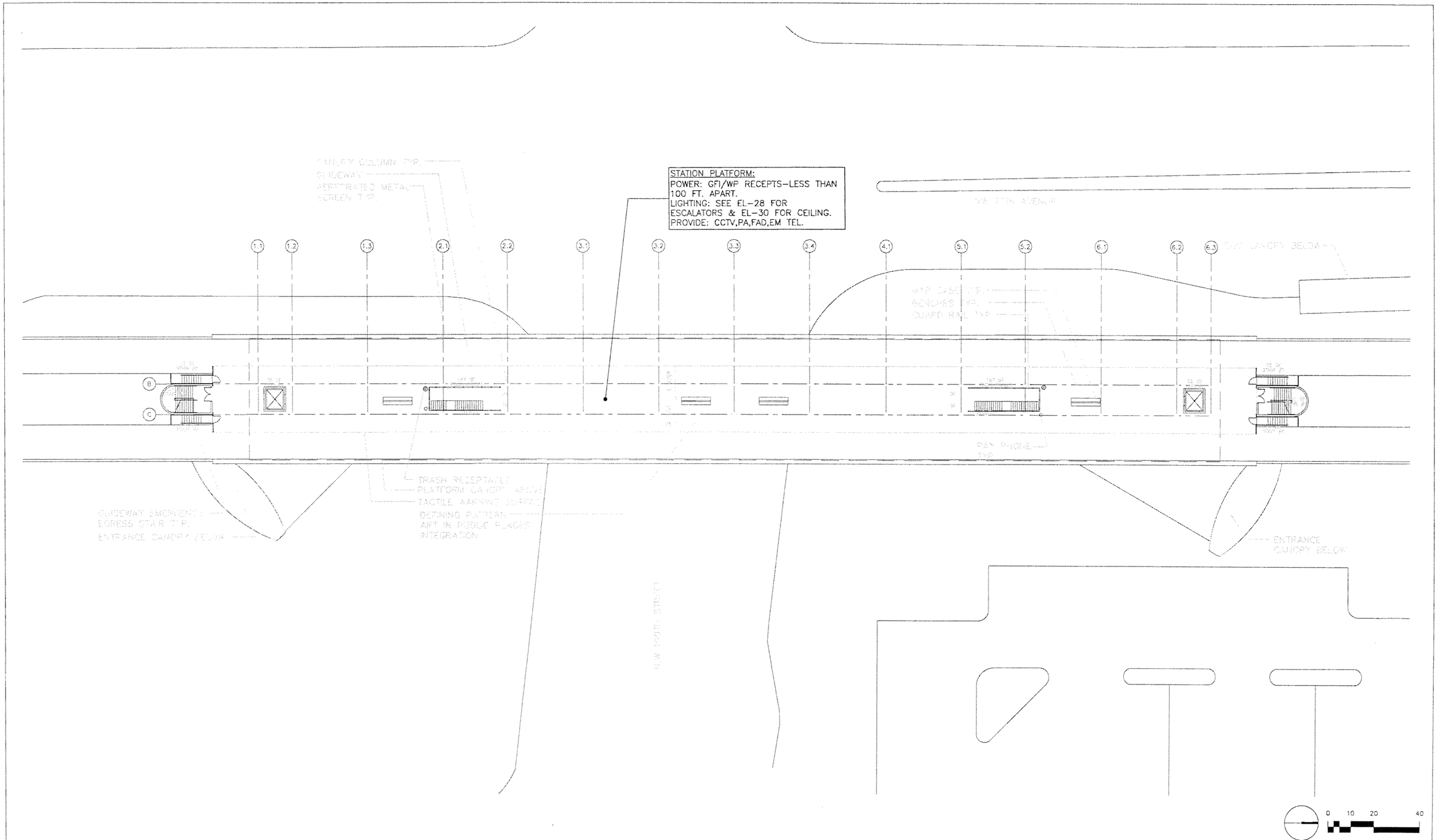

SUBJECT TO CHANGE

Designed by A.C. Date						
Drawn by B.L. Date						
Checked by A.C. Date						
A.C.						
Approved by Date	No.	Date	By / Chk	App.	Revisions	

NORTH CORRIDOR METRORAIL EXTENSION - PRELIMINARY ENGINEERING (100% SUBMITTAL)

MIAMI-DADE COUNTY

MIAMI-DADE TRANSIT

PARSONS
7600 CORPORATE CENTER DRIVE, SUITE 500
MIAMI, FLORIDA 33126
PHONE: (786) 464-1000 FAX: (786) 845-7119
CERTIFICATE OF AUTHORIZATION NO. 1838

H.J. ROSS
201 ALHAMBRA CIRCLE SUITE 900
CORAL GABLES, FLORIDA 33134
PHONE: (305) 567-1888 / FAX: (305) 567-1771
407

Approved | Date | Approved | Date 05-05-06

ELECTRICAL

NW 199TH ST. STATION
ELECTRICAL
PLAFORM LEVEL PLAN

Scale 1"=40' | Drawing EL-29 | Sheet 201

G:\550515 N... Corridor\NW 199 ST\Elec\SHT\EL-29.dwg, 5/12/2006 3:29:03 PM, blindholm

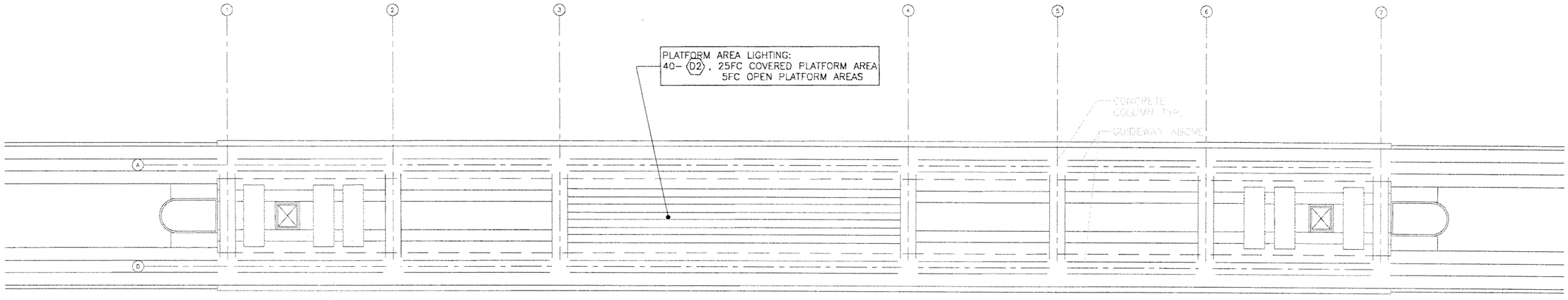

0 10 20 40

SUBJECT TO CHANGE

Designed by A.C. Date					
Drawn by B.L. Date					
Checked by A.C. Date					
A.C.					
Approved by Date	No.	Date	By / Chk	App.	Revisions

NORTH CORRIDOR METRORAIL EXTENSION - PRELIMINARY ENGINEERING (100% SUBMITTAL)

MIAMI-DADE COUNTY

MIAMI-DADE TRANSIT

PARSONS
7600 CORPORATE CENTER DRIVE, SUITE 500
MIAMI, FLORIDA 33126
PHONE: (786) 464-1000 FAX: (786) 845-7119
CERTIFICATE OF AUTHORIZATION NO. 1838

Approved | Date

H.J. ROSS
201 ALHAMBRA CIRCLE SUITE 900
CORAL GABLES, FLORIDA 33134
PHONE: (305) 567-1888 / FAX: (305) 567-1771
407

Approved | Date 05-05-06

ELECTRICAL

NW 199TH ST. STATION ELECTRICAL REFLECTED CEILING PLAN

Scale 1"=40' | Drawing EL-30 | Sheet 202

G:\550515 Nc... Corridor\NW 199 ST\Elec\SHT\EL-30.dwg, 5/12/2006 3:29:08 PM, blindholm

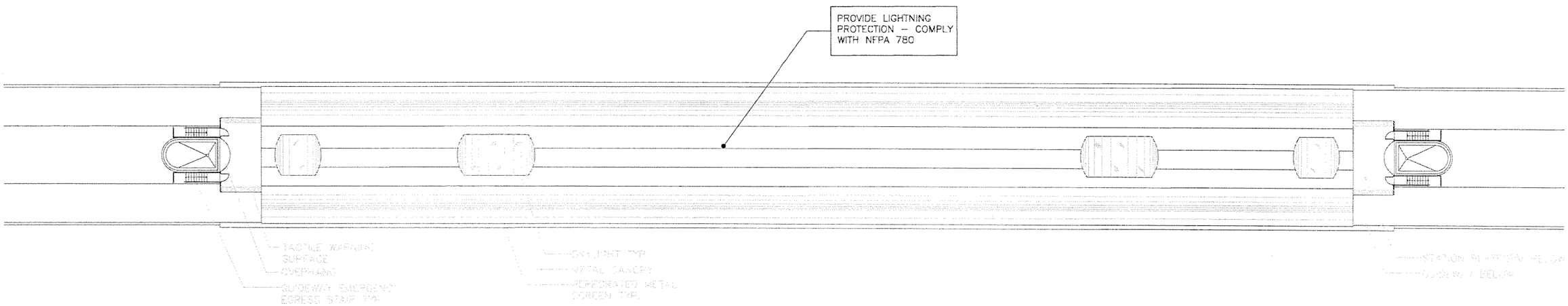

0 10 20 40

SUBJECT TO CHANGE

Designed by A.C. Date						
Drawn by B.L. Date						
Checked by A.C. Date						
A.C.						
Approved by Date	No.	Date	By / Chk	App.	Revisions	

NORTH CORRIDOR METRORAIL EXTENSION - PRELIMINARY ENGINEERING (100% SUBMITTAL)

MIAMI-DADE COUNTY

MIAMI-DADE TRANSIT

PARSONS
7600 CORPORATE CENTER DRIVE, SUITE 500
MIAMI, FLORIDA 33126
PHONE: (786) 464-1000 FAX: (786) 845-7119
CERTIFICATE OF AUTHORIZATION NO. 1838

H.J. ROSS
201 ALHAMBRA CIRCLE SUITE 900
CORAL GABLES, FLORIDA 33134
PHONE: (305) 567-1888 / FAX: (305) 567-1771
407

Approved	Date	Approved	Date
			05-05-06

ELECTRICAL

NW 199TH ST. STATION ELECTRICAL ROOF PLAN

Scale	Drawing	Sheet
1"=40'	EL-31	203

G:\550515 N... Corridor\NW 199 ST\Elec\SHT\EL-31.dwg, 5/12/2006 3:29:14 PM, blindholm

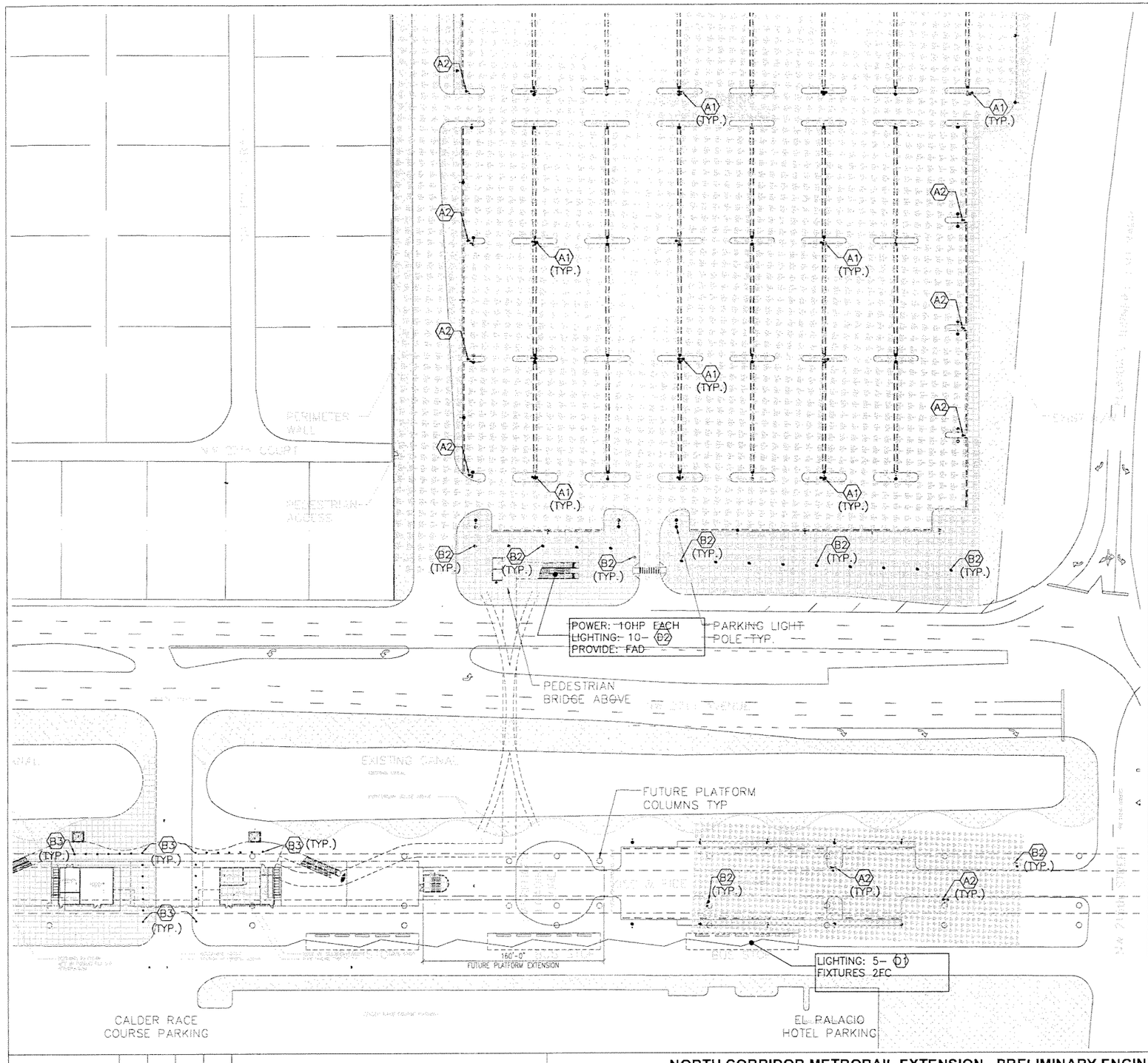

MARK	REFERENCE FIXTURE		LAMP		VOLT	MOUNTING	REMARKS
	MFG.	CATALOG NO.	TYPE	NO.			
A1	KIM	AC21X4/400 MHXX	400W MH	2	277	TWIN/POLE	30' MOUNTING HEIGHT (MT.HT.)
A2	KIM	AC21X4/400 MHXX	400W MH	1	277	SINGLE/POLE	30' MT.HT.
A3	KIM	AC21X4/250 MHXX	250W MH	2	277	TWIN/POLE	25' MT.HT.
A4	KIM	AC21X4/250 MHXX	250W MH	1	277	SINGLE/POLE	25' MT.HT.
B1	SPAULDING	CDS-H17-H3	175W MH	1	277	POLE/15'MT. HT.	TYPE III DIST.
B2	SPAULDING	CDS-MS17-H5	175W MH	1	277	POLE/ MT. HT.	TYPE V DIST.
B3	ARCHITECT AREA LIGHTING	CBR18-42-HORZ-175MH-DOME-XXX	175W MH	1	277	FLOOR	CONCRETE BOLLARD
C	KENNALL	MR17CD-PP-XX	100W MH	1	277	WALL/CEIL. MT.	ENTRANCE/PLATFORM/BUS SHELTER
D1	WINONA LIGHTING	P2-LSW-M400-XXX-LS4-SEW-X-STD	400W MH	1	277	SURFACE	ENTRANCE/PLATFORM CANOPY
D2	LOUIS POULSEN LIGHTING	ARP/1/150MH/XX/WIDE	150W MH	1	277	SUSPENSION TYPE	BUS SHELTER (HIGH CEILING)
D3	ARCHITECT AREA LIGHTING	CPH-250PSMH-XXX-SHD	250W MH	1	277	SURFACE	HIGH CEILING CANOPY
E	KIM	PGL51-175PMH	175W MH	1	277	SURFACE	PARKING GARAGE
F	KIM	LTV710-NF-175MH	175W MH	1	120	IN-GRADE	LANDSCAPE
G	COLUMBIA	LUN4-232-EB	F032 FLUOR.	2	277	SURFACE	JANITOR/ELEC/MECH/MAINT.
H	COLUMBIA	MLVL4-232EB8	F032 FLUOR.	2	277	CEILING	BATHROOMS (VANDAL RESISTANT)

0 25 50 100

SUBJECT TO CHANGE

Designed by A.C. Date
Drawn by B.L. Date
Checked by A.C. Date
A.C.
Approved by Date

No.	Date	By / Chk	App.	Revisions

NORTH CORRIDOR METRORAIL EXTENSION - PRELIMINARY ENGINEERING (100% SUBMITTAL)

MIAMI-DADE COUNTY

MIAMI-DADE TRANSIT

PARSONS
7600 CORPORATE CENTER DRIVE, SUITE 500
MIAMI, FLORIDA 33126
PHONE: (786) 464-1000 FAX: (786) 845-7119
CERTIFICATE OF AUTHORIZATION NO. 1838

Approved Date

H.J. ROSS
201 ALHAMBRA CIRCLE SUITE 900
CORAL GABLES, FLORIDA 33134
PHONE: (305) 567-1888 / FAX: (305) 567-1771
407

Approved Date 05-05-06

ELECTRICAL

NW 215TH ST. STATION ELECTRICAL SITE PLAN

Scale 1" = 100' Drawing EL-32 Sheet 204

G:\550515 Nor... ...orridor\NW 215 ST\Elec\SHT\EL-32.dwg, 5/12/2006 3:42:24 PM, blindholm

0 25 50 100

SUBJECT TO CHANGE

NORTH CORRIDOR METRORAIL EXTENSION - PRELIMINARY ENGINEERING (100% SUBMITTAL)

ELECTRICAL

Designed by A.C. Date
Drawn by B.L. Date
Checked by A.C. Date
A.C.
Approved by Date

No.	Date	By / Chk	App.	Revisions

MIAMI-DADE COUNTY

MIAMI-DADE TRANSIT

PARSONS
7600 CORPORATE CENTER DRIVE, SUITE 500
MIAMI, FLORIDA 33126
PHONE: (786) 464-1000 FAX: (786) 845-7119
CERTIFICATE OF AUTHORIZATION NO. 1838

Approved Date

H.J. ROSS
201 ALHAMBRA CIRCLE SUITE 900
CORAL GABLES, FLORIDA 33134
PHONE: (305) 567-1888 / FAX: (305) 567-1771
407

Approved Date 05-05-06

NW 215TH ST. STATION ELECTRICAL SITE PLAN-cont'd

Scale 1" = 100' Drawing EL-33 Sheet 205

G:\550515 No. ...oridor\NW 215 ST\Elec\SHT\EL-33.dwg, 5/12/2006 3:42:40 PM, blindholm

LANDSCAPE
LIGHTING: 3– (F)

ROOM WATTS: 1500
LIGHTING: 8– (G), 15FC
PROVIDE: ID,
SD,CCTV,EM.TEL.,FAD

ROOM WATTS: 4130
LIGHTING: 1– (G), 10FC
PROVIDE: SD,ID,CCTV,PA,FAD

POWER: 10HP EACH
LIGHTING: 10– (D2)
PROVIDE: FAD

ROOM WATTS: 2380
LIGHTING: 12– (G), 30FC
PROVIDE: ID,SD,CCTV,
EM.TEL.,FAD

ROOM WATTS: 3300
LIGHTING: 8– (G), 30FC
PROVIDE: FAD

ROOM WATTS: 4130
LIGHTING: 1– (G), 10FC
PROVIDE: SD,ID,CCTV,PA,FAD

ROOM WATTS: 180
LIGHTING: 1– (G), 10FC
PROVIDE: FAD

LANDSCAPE
LIGHTING: 3– (F)

POWER: 10HP EACH
LIGHTING: 10– (D2)
PROVIDE: FAD

LIGHTING:
4– (G), 20FC

LIGHTING:
6– (D3), 5FC

LIGHTING:
4– (D3), 5FC

LIGHTING:
6– (D3), 5FC

LIGHTING:
4– (G), 20FC

ROOM WATTS: 2290
LIGHTING: 4– (G), 30FC
(AMBIENT) 75FC (TASK)
PROVIDE: ID,SD,FAD

ROOM WATTS: 16190
LIGHTING: 10– (G), 30FC
PROVIDE: ID,SD,CCTV,FACP,
FAD,PA,EM.TEL.

ROOM WATTS: 830
LIGHTING: 8– (G), 15FC
PROVIDE: FAD

LIGHTING: 5– (D1)
FIXTURES 2FC

LIGHTING: 5– (D1)
FIXTURES 2FC

EMERGENCY STAIRWAY

DEFINING PATTERN
ART IN PUBLIC PLACES
INTEGRATION

MEZZANINE ABOVE
STATION PLATFORM ABOVE

EDGE OF GUIDEWAY ABOVE
PAY PHONE TYP.

SOS STOP

160'-0"

FUTURE PLATFORM

CALDER RACE
COURSE PARKING

CALDER RACE COURSE PARKING

ABBREVIATIONS:
INTRUSION DETECTION : ID
SECURITY DOORS: SD
PUBLIC ADDRESS SYSTEM: PA
CLOSED CIRCUIT TV SYSTEM: CCTV
FIRE ALARM CONTROL PANEL: FACP
FIRE ALARM DEVICE: FAD
EMERGENCY TELEPHONE: EM TEL.

0 10 20 40

SUBJECT TO CHANGE

G:\550515 Nor...rridor\NW 215 ST\Elec\SHT\EL-34.dwg, 5/12/2006 3:42:53 PM, blindholm

Designed by A.C. Date
Drawn by B.L. Date
Checked by A.C. Date
A.C.
Approved by Date

No.	Date	By Chk	App.	Revisions

NORTH CORRIDOR METRORAIL EXTENSION - PRELIMINARY ENGINEERING (100% SUBMITTAL)

MIAMI-DADE COUNTY

MIAMI-DADE TRANSIT

PARSONS
7600 CORPORATE CENTER DRIVE, SUITE 500
MIAMI, FLORIDA 33126
PHONE: (786) 464-1000 FAX: (786) 845-7119
CERTIFICATE OF AUTHORIZATION NO. 1838

Approved Date

H.J. ROSS
201 ALHAMBRA CIRCLE SUITE 900
CORAL GABLES, FLORIDA 33134
PHONE: (305) 567-1888 / FAX: (305) 567-1771
407

Approved Date 05-05-06

ELECTRICAL

NW 215TH ST. STATION ELECTRICAL PLAZA LEVEL PLAN

Scale 1"=40' Drawing EL-34 Sheet 206

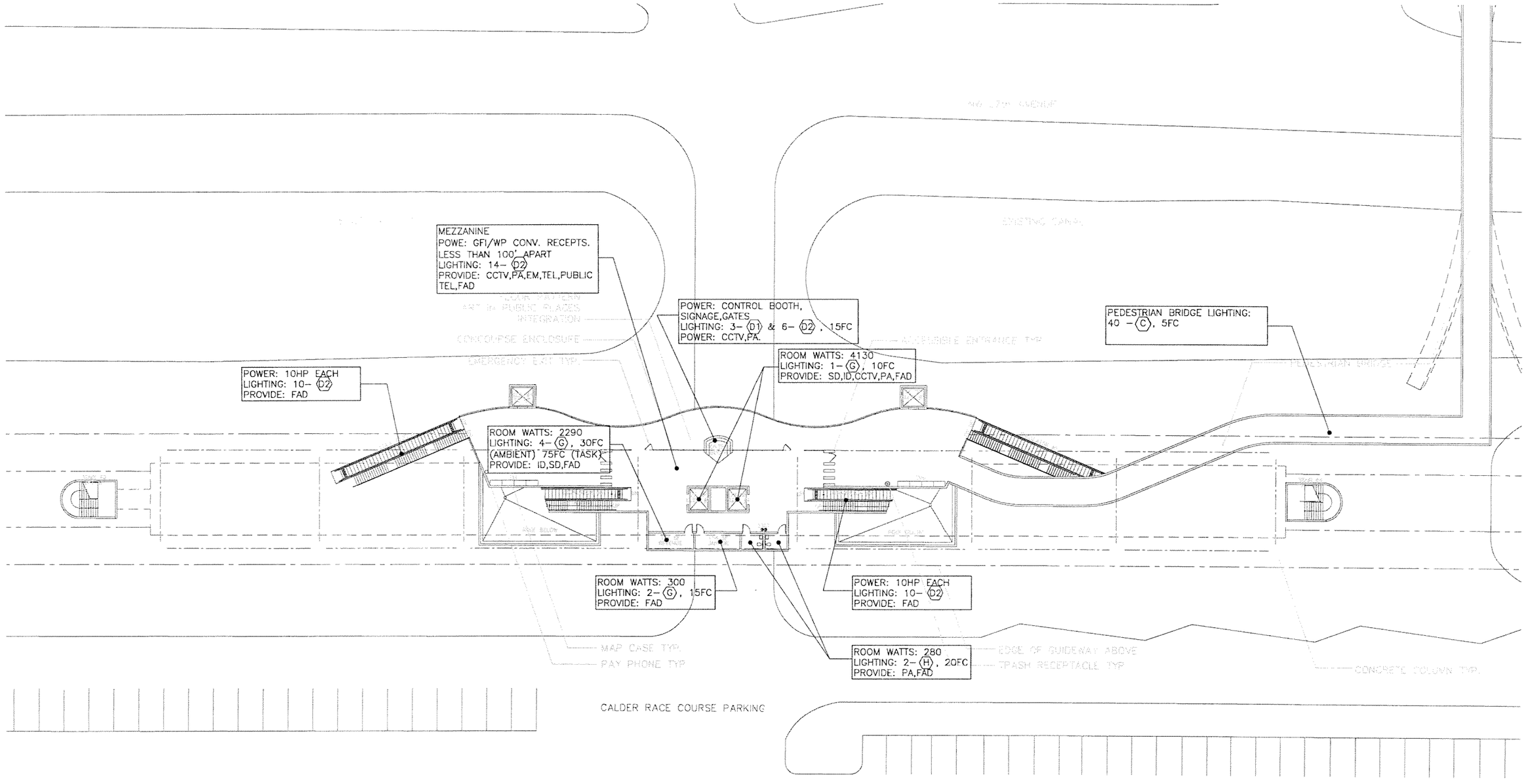

SUBJECT TO CHANGE

Designed by A.C. Date							
Drawn by B.L. Date							
Checked by A.C. Date							
A.C. Approved by Date	No.	Date	By / Chk	App.	Revisions		

NORTH CORRIDOR METRORAIL EXTENSION - PRELIMINARY ENGINEERING (100% SUBMITTAL)

MIAMI-DADE COUNTY

MIAMI-DADE TRANSIT

PARSONS
7600 CORPORATE CENTER DRIVE, SUITE 500
MIAMI, FLORIDA 33126
PHONE: (786) 464-1000 FAX: (786) 845-7119
CERTIFICATE OF AUTHORIZATION NO. 1838

Approved | Date

H.J. ROSS
201 ALHAMBRA CIRCLE SUITE 900
CORAL GABLES, FLORIDA 33134
PHONE: (305) 567-1888 / FAX: (305) 567-1771
407

Approved | Date 05-05-06

ELECTRICAL

NW 215TH ST. STATION ELECTRICAL MEZZANINE FLOOR PLAN

Scale 1"=40' | Drawing EL-35 | Sheet 207

G:\550515 No. orridor\NW 215 ST\Elec\SHT\EL-35.dwg, 5/12/2006 3:43:01 PM, blindholm

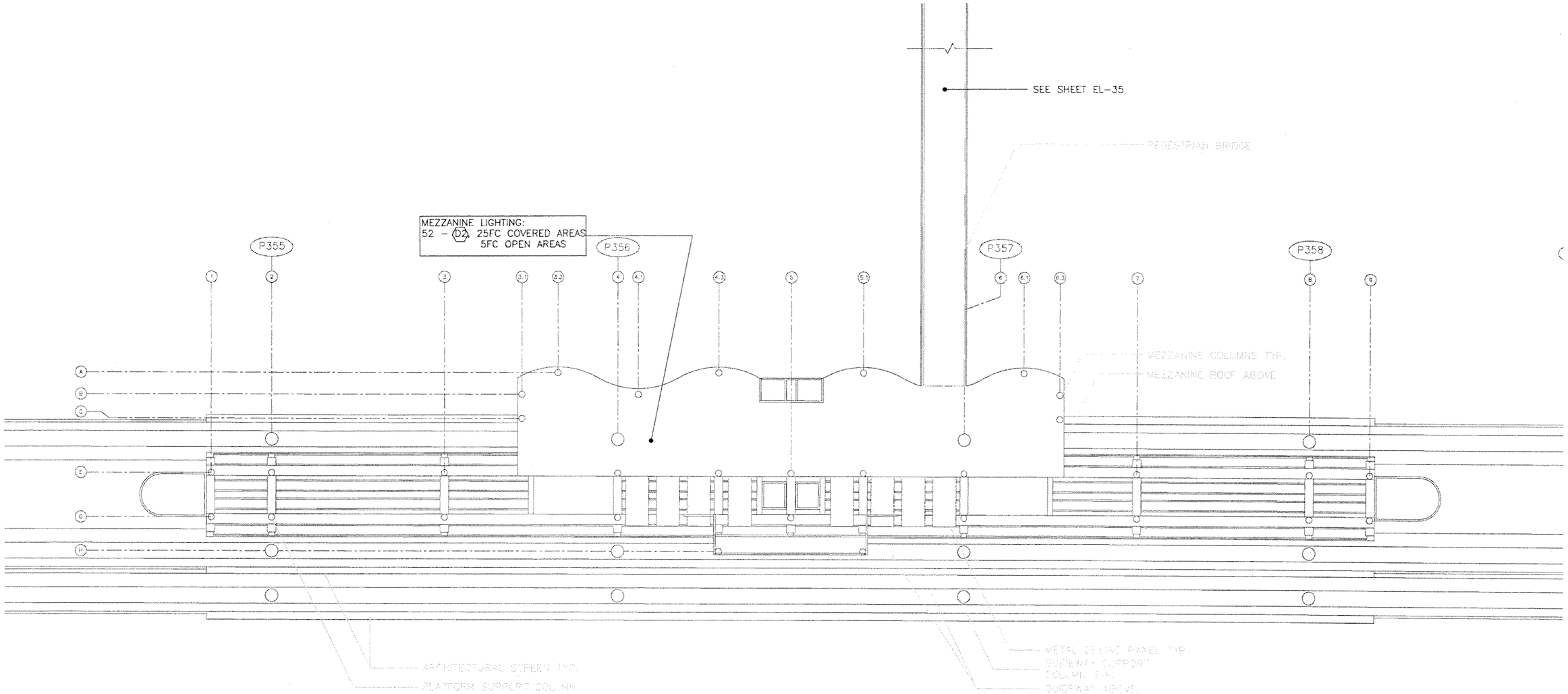

0 10 20 40

SUBJECT TO CHANGE

G:\550515 Nor...orridor\NW 215 ST\Elec\SHT\EL-36.dwg, 5/12/2006 3:43:06 PM, blindholm

Designed by A.C. Date						
Drawn by B.L. Date						
Checked by A.C. Date						
A.C.						
Approved by Date	No.	Date	By Chk	App.	Revisions	

NORTH CORRIDOR METRORAIL EXTENSION - PRELIMINARY ENGINEERING (100% SUBMITTAL)

MIAMI-DADE COUNTY

MIAMI-DADE TRANSIT

PARSONS
7600 CORPORATE CENTER DRIVE, SUITE 500
MIAMI, FLORIDA 33126
PHONE: (786) 464-1000 FAX: (786) 845-7119
CERTIFICATE OF AUTHORIZATION NO. 1838

Approved | Date

H.J. ROSS
201 ALHAMBRA CIRCLE SUITE 900
CORAL GABLES, FLORIDA 33134
PHONE: (305) 567-1888 / FAX: (305) 567-1771
407

Approved | Date 05-05-06

ELECTRICAL

NW 215TH ST. STATION ELECTRICAL MEZZANINE REFLECTED CEILING PLAN

Scale 1" = 40' | Drawing EL-36 | Sheet 209

STATION PLATFORM:
POWER: GFI/WP RECEPTS–LESS THAN 100 FT. APART.
LIGHTING: SEE EL–07 FOR ESCALATORS & EL–09 FOR CEILING.
PROVIDE: CCTV,PA,FAD,EM TEL.

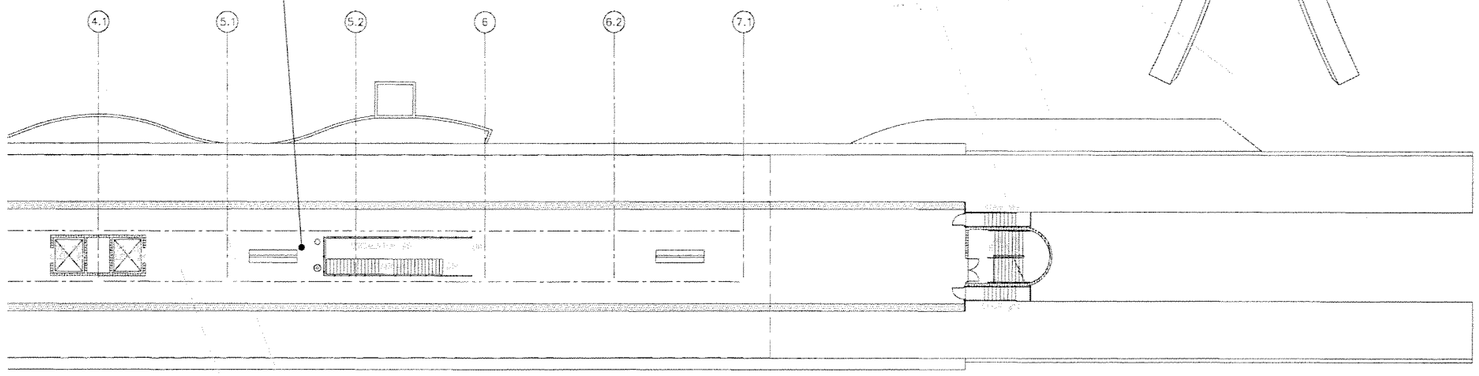

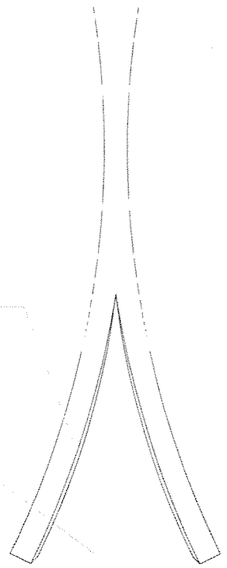

CANOPY COLUMN TYP.
STATION GUIDEWAY
PATTERN
ART IN PUBLIC PLACES
INTEGRATION

0 10 20 40

SUBJECT TO CHANGE

Designed by A.C. Date						NORTH CORRIDOR METRORAIL EXTENSION - PRELIMINARY ENGINEERING (100% SUBMITTAL)	ELECTRICAL
Drawn by B.L. Date							
Checked by A.C. Date							
A.C.							
Approved by Date	No.	Date	By / Chk	App.	Revisions		

MIAMI-DADE COUNTY — MIAMI-DADE TRANSIT

PARSONS
7600 CORPORATE CENTER DRIVE, SUITE 500
MIAMI, FLORIDA 33126
PHONE: (786) 464-1000 FAX: (786) 845-7119
CERTIFICATE OF AUTHORIZATION NO. 1838
Approved | Date

H.J. ROSS
201 ALHAMBRA CIRCLE SUITE 900
CORAL GABLES, FLORIDA 33134
PHONE: (305) 567-1888 / FAX: (305) 567-1771
407
Approved | Date 05-05-06

NW 215TH ST. STATION ELECTRICAL PLATFORM PLAN

Scale 1" = 40' | Drawing EL-37 | Sheet 209

G:\550515 No...rridor\NW 215 ST\Elec\SHT\EL-37.dwg, 5/12/2006 3:43:11 PM, blindholm

PLATFORM AREA LIGHTING:
52– (D2), 25FC COVERED PLATFORM AREA
5FC OPEN PLATFORM AREAS

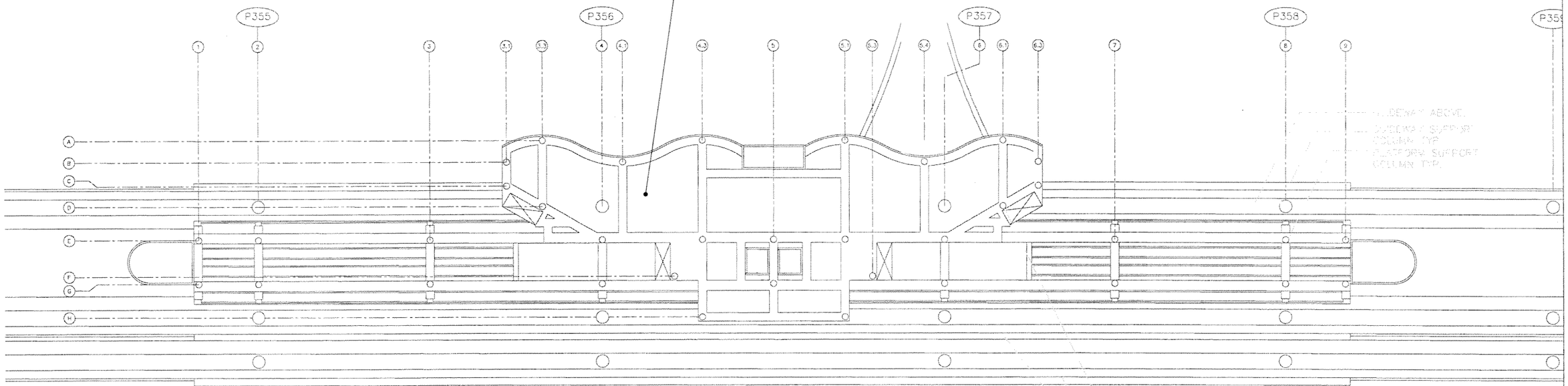

0 10 20 40

SUBJECT TO CHANGE

Designed by A.C. Date					
Drawn by B.L. Date					
Checked by A.C. Date					
A.C.					
Approved by Date	No.	Date	By / Chk	App.	Revisions

NORTH CORRIDOR METRORAIL EXTENSION - PRELIMINARY ENGINEERING (100% SUBMITTAL)

MIAMI-DADE COUNTY

MIAMI-DADE TRANSIT

PARSONS
7600 CORPORATE CENTER DRIVE, SUITE 500
MIAMI, FLORIDA 33126
PHONE: (786) 464-1000 FAX: (786) 845-7119
CERTIFICATE OF AUTHDRIZATION NO. 1838

H.J. ROSS
201 ALHAMBRA CIRCLE SUITE 900
CORAL GABLES, FLORIDA 33134
PHONE: (305) 567-1888 / FAX: (305) 567-1771
407

Approved	Date	Approved	Date
			05-05-06

ELECTRICAL

NW 215TH ST. STATION ELECTRICAL PLATFORM REFLECTED CEILING PLAN

Scale	Drawing	Sheet
1"=40'	EL-38	210

G:\550515 Nort...orridor\NW 215 ST\Elec\SHT\EL-38.dwg, 5/12/2006 3:43:15 PM, blindholm

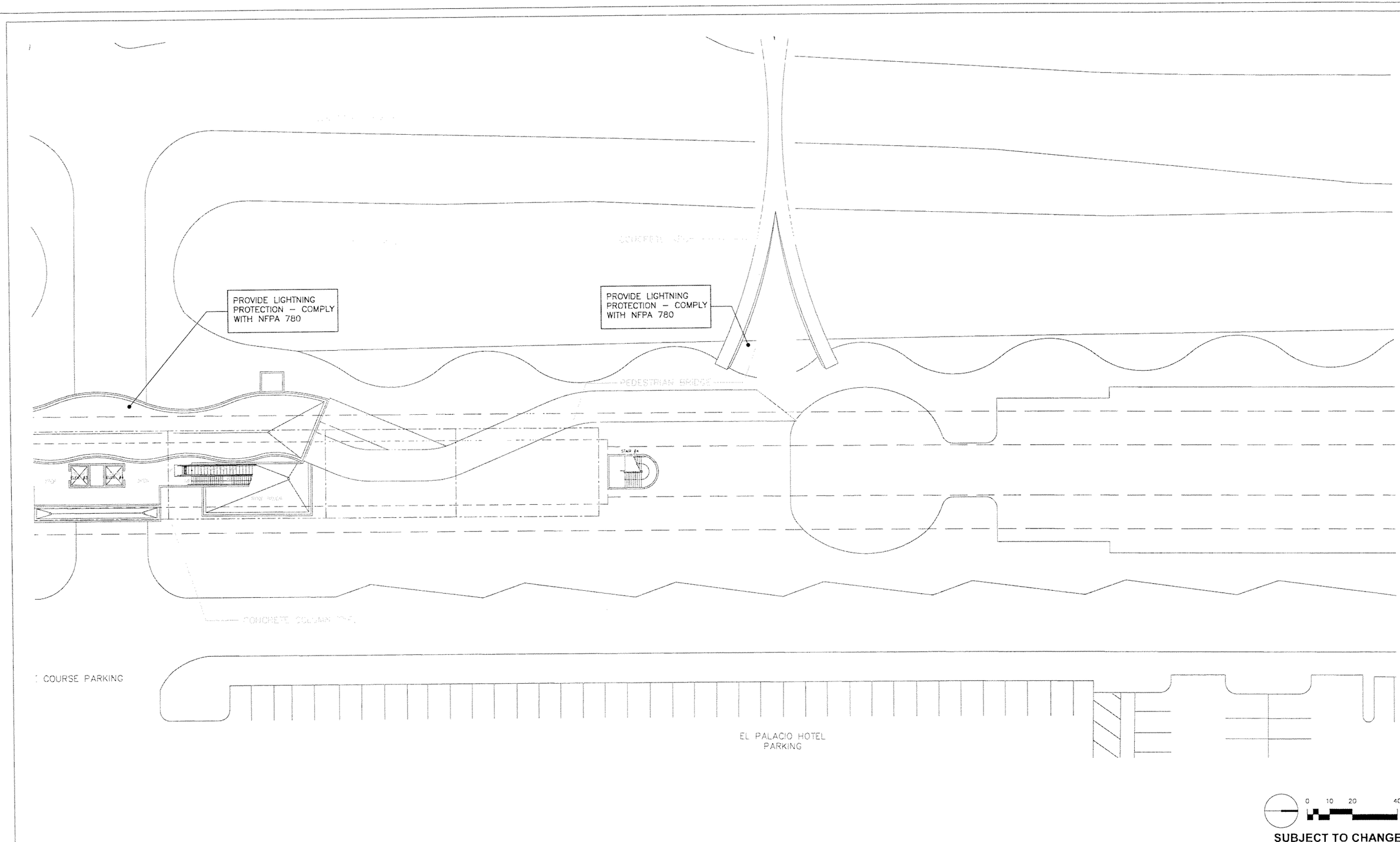

G:\550515 North Corridor\NW 215 ST\Elec\SHT\EL-39.dwg, 5/12/2006 3:43:20 PM, blindholm

Designed by A.C.	Date				
Drawn by B.L.	Date				
Checked by A.C.	Date				
Approved by A.C.	Date	No.	Date	By / Chk	App.	Revisions

NORTH CORRIDOR METRORAIL EXTENSION - PRELIMINARY ENGINEERING (100% SUBMITTAL)

MIAMI-DADE COUNTY

MIAMI-DADE TRANSIT

PARSONS
7600 CORPORATE CENTER DRIVE, SUITE 500
MIAMI, FLORIDA 33126
PHONE: (786) 464-1000 FAX: (786) 845-7119
CERTIFICATE OF AUTHORIZATION NO. 1838

Approved | Date

H.J. ROSS
201 ALHAMBRA CIRCLE SUITE 900
CORAL GABLES, FLORIDA 33134
PHONE: (305) 567-1888 / FAX: (305) 567-1771
407

Approved | Date 05-05-06

$DATE$ $TIME$ $FILE$

ELECTRICAL

NW 215TH ST. STATION
ELECTRICAL
MEZZANINE ROOF PLAN

Scale 1"=40' | Drawing EL-39 | Sheet 211

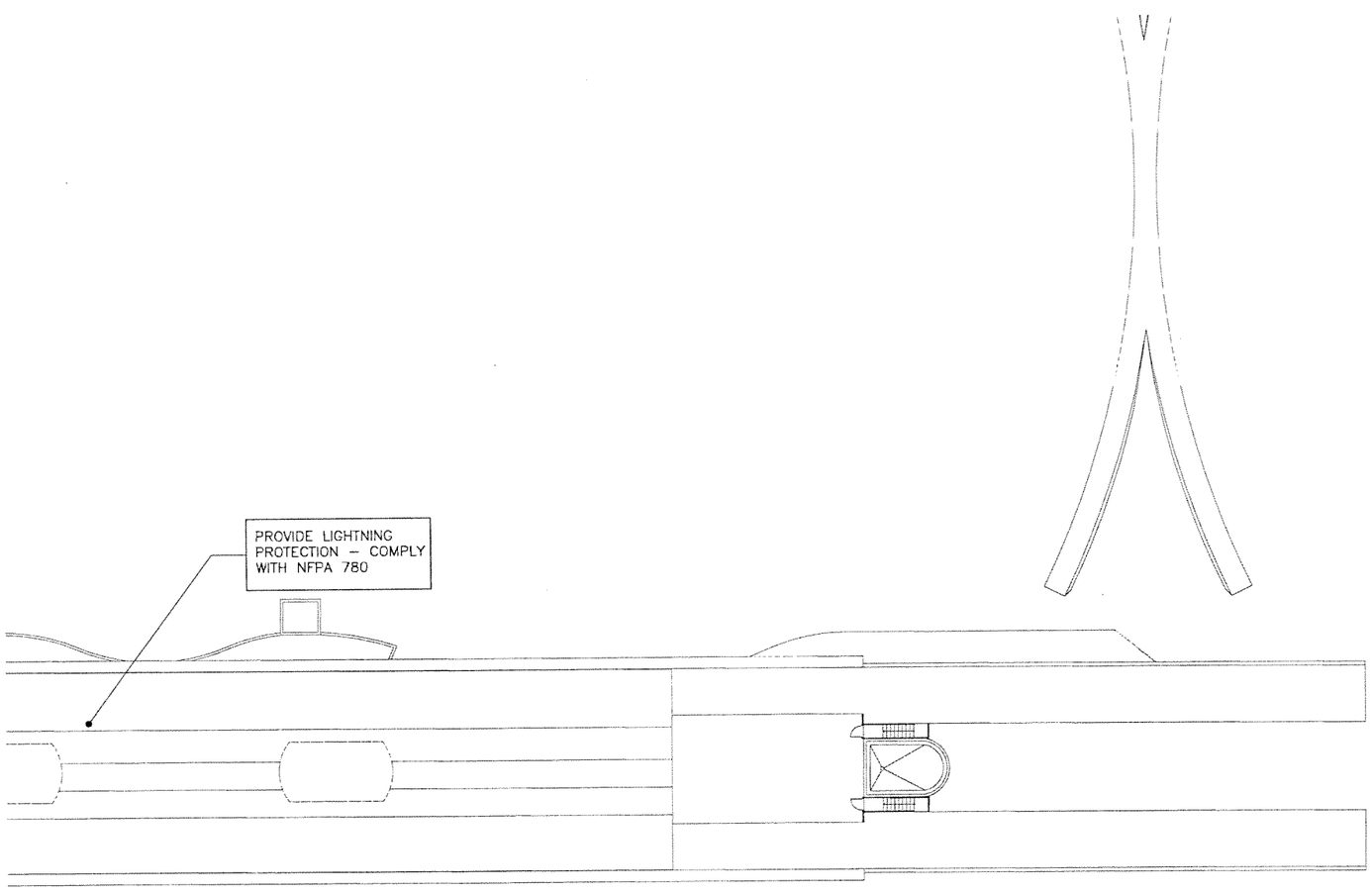

0 10 20 40

SUBJECT TO CHANGE

G:\550515 Nort...rridor\NW 215 ST\Elec\SHT\EL-40.dwg, 5/12/2006 3:43:25 PM, blindholm

Designed by A.C. Date					NORTH CORRIDOR METRORAIL EXTENSION - PRELIMINARY ENGINEERING (100% SUBMITTAL)	ELECTRICAL
Drawn by B.L. Date						
Checked by A.C. Date						
A.C. Approved by Date	No.	Date	By / Chk	App.	Revisions	

MIAMI-DADE COUNTY — MIAMI-DADE TRANSIT

PARSONS
7600 CORPORATE CENTER DRIVE, SUITE 500
MIAMI, FLORIDA 33126
PHONE: (786) 464-1000 FAX: (786) 845-7119
CERTIFICATE OF AUTHORIZATION NO. 1838

H.J. ROSS
201 ALHAMBRA CIRCLE SUITE 900
CORAL GABLES, FLORIDA 33134
PHONE: (305) 567-1888 / FAX: (305) 567-1771
407

Approved	Date	Approved	Date 05-05-06	Scale 1" = 40'	Drawing EL-40	Sheet 212
$DATE$			$TIME$	$FILE$		

NW 215TH ST. STATION ELECTRICAL ROOF PLAN

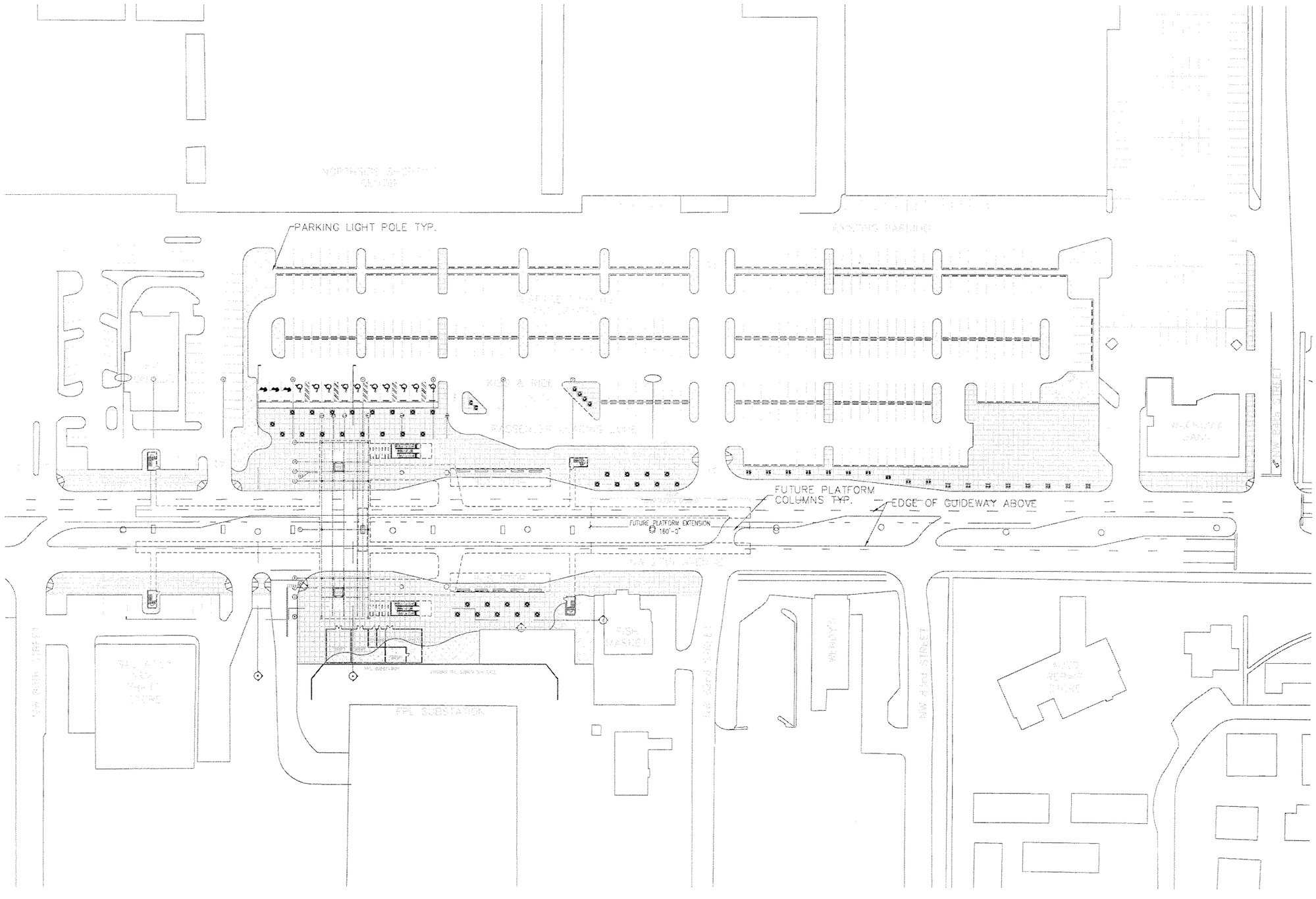

NO MECHANICAL WORK DONE ON THIS SHEET FOR THIS SUBMITTAL.

0 25 50 100

SUBJECT TO CHANGE

Designed by A.H. Date						
Drawn by A.H. Date						
Checked by G.V. Date						
Approved by G.V. Date	No.	Date	By / Chk	App.	Revisions	

NORTH CORRIDOR METRORAIL EXTENSION - PRELIMINARY ENGINEERING (100% SUBMITTAL)

MIAMI-DADE COUNTY

MIAMI-DADE TRANSIT

PARSONS
7600 CORPORATE CENTER DRIVE, SUITE 500
MIAMI, FLORIDA 33126
PHONE: (786) 464-1000 FAX: (786) 845-7119
CERTIFICATE OF AUTHORIZATION NO. 1838

H.J. ROSS
201 ALHAMBRA CIRCLE SUITE 900
CORAL GABLES, FLORIDA 33134
PHONE: (305) 567-1888 / FAX: (305) 567-1771
407

Approved | Date | Approved | Date 05-05-06

MECHANICAL

NW 82ND ST. STATION MECHANICAL SITE PLAN

Scale 1"=100' | Drawing ME-01 | Sheet 213

G:\550515 N..Corridor\NW 82 ST\Mech\Hvac\SHTME-01.dwg, 5/12/2006 1:57:28 PM, blindhol.

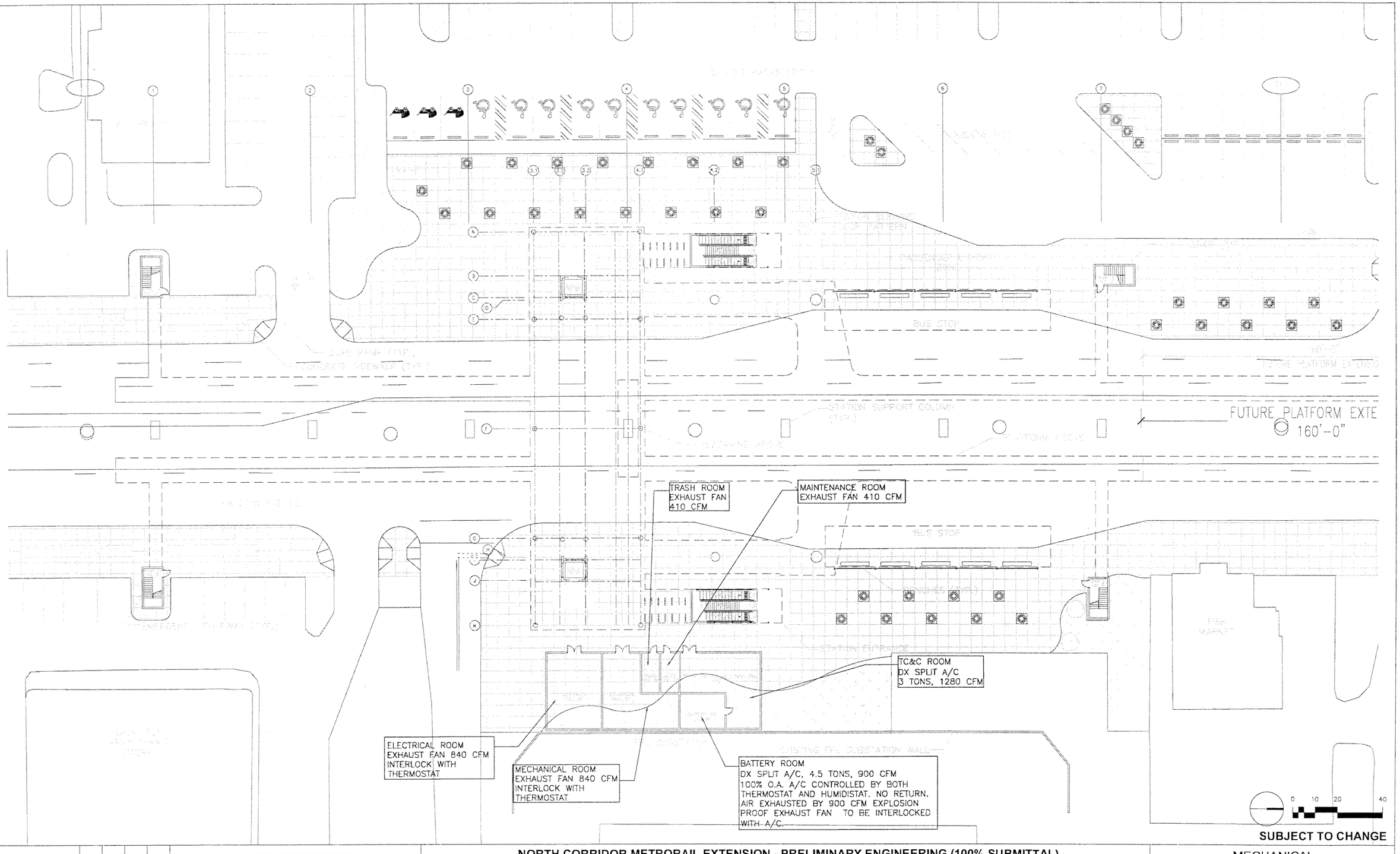

SUBJECT TO CHANGE

G:\550515 North Corridor\NW 82 ST\Mech\Hvac\SHTME-02.dwg, 5/12/2006 1:57:38 PM, blindholm

Designed by A.H. Date							
Drawn by A.H. Date							
Checked by G.V. Date							
Approved by G.V. Date	No.	Date	By / Chk	App.	Revisions		

NORTH CORRIDOR METRORAIL EXTENSION - PRELIMINARY ENGINEERING (100% SUBMITTAL)

MECHANICAL

MIAMI-DADE COUNTY

MIAMI-DADE TRANSIT

PARSONS
7600 CORPORATE CENTER DRIVE, SUITE 500
MIAMI, FLORIDA 33126
PHONE: (786) 464-1000 FAX: (786) 845-7119
CERTIFICATE OF AUTHORIZATION NO. 1838

Approved _____ Date _____

H.J. ROSS
201 ALHAMBRA CIRCLE SUITE 900
CORAL GABLES, FLORIDA 33134
PHONE: (305) 567-1888 / FAX: (305) 567-1771
407

Approved _____ Date 05-05-06

NW 82ND ST. STATION MECHANICAL PLAZA LEVEL PLAN

Scale 1"=40' Drawing ME-02 Sheet 214

JANITOR ROOM
EXHAUST FAN 145 CFM
CONSTANT OPERATION

RESTROOM
EXHAUST FAN 145 CFM
INTERLOCK WITH LIGHT
SWITCH

RESTROOM
EXHAUST FAN 145 CFM
INTERLOCK WITH LIGHT
SWITCH

REVENUE
MINI DX SPLIT A/C
1/2 TON, 75 CFM

FUTURE PLATFORM EXTENSI
160'-0"

0 10 20 40

SUBJECT TO CHANGE

Designed by A.H. Date						
Drawn by A.H. Date						
Checked by G.V. Date						
Approved by G.V. Date	No.	Date	By / Chk	App.	Revisions	

NORTH CORRIDOR METRORAIL EXTENSION - PRELIMINARY ENGINEERING (100% SUBMITTAL)

MIAMI-DADE COUNTY

MIAMI-DADE TRANSIT

PARSONS
7600 CORPORATE CENTER DRIVE, SUITE 500
MIAMI, FLORIDA 33126
PHONE: (786) 464-1000 FAX: (786) 845-7119
CERTIFICATE OF AUTHORIZATION NO. 1838

H.J. ROSS
201 ALHAMBRA CIRCLE SUITE 900
CORAL GABLES, FLORIDA 33134
PHONE: (305) 567-1888 / FAX: (305) 567-1771
407

Approved	Date	Approved	Date	Scale	Drawing	Sheet
			05-05-06	1"=10'	ME-03	215

MECHANICAL

NW 82ND ST. STATION MECHANICAL MEZZANINE LEVEL PLAN

G:\550515 No...Corridor\NW 82 ST\Mech\Hvac\SHTME-03.dwg, 5/12/2006 1:57:48 PM, blindholr

G:\550515 No... Corridor\NW 82 ST\Mech\Hvac\SHTME-04.dwg, 5/12/2006 1:57:58 PM, blindholt,

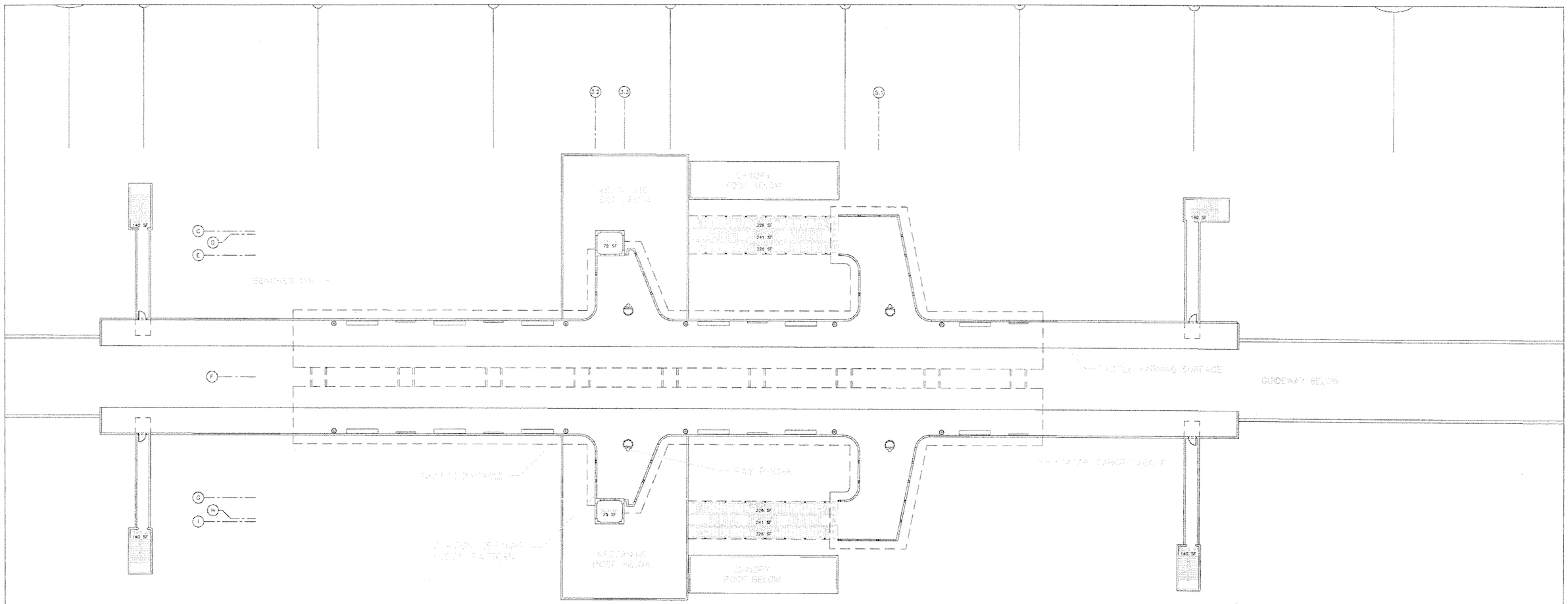

NO MECHANICAL WORK DONE ON THIS SHEET FOR THIS SUBMITTAL.

0 10 20 40

SUBJECT TO CHANGE

Designed by A.H. Date						
Drawn by A.H. Date						
Checked by G.V. Date						
Approved by G.V. Date	No.	Date	By / Chk	App.	Revisions	

NORTH CORRIDOR METRORAIL EXTENSION - PRELIMINARY ENGINEERING (100% SUBMITTAL)

MIAMI-DADE COUNTY

MIAMI-DADE TRANSIT

PARSONS
7600 CORPORATE CENTER DRIVE, SUITE 500
MIAMI, FLORIDA 33126
PHONE: (786) 464-1000 FAX: (786) 845-7119
CERTIFICATE OF AUTHORIZATION NO. 1838

H.J. ROSS
201 ALHAMBRA CIRCLE SUITE 900
CORAL GABLES, FLORIDA 33134
PHONE: (305) 567-1888 / FAX: (305) 567-1771
407

Approved	Date	Approved	Date
			05-05-06

MECHANICAL

NW 82ND ST. STATION MECHANICAL PLATFORM LEVEL PLAN

Scale 1"=40' | Drawing ME-04 | Sheet 216

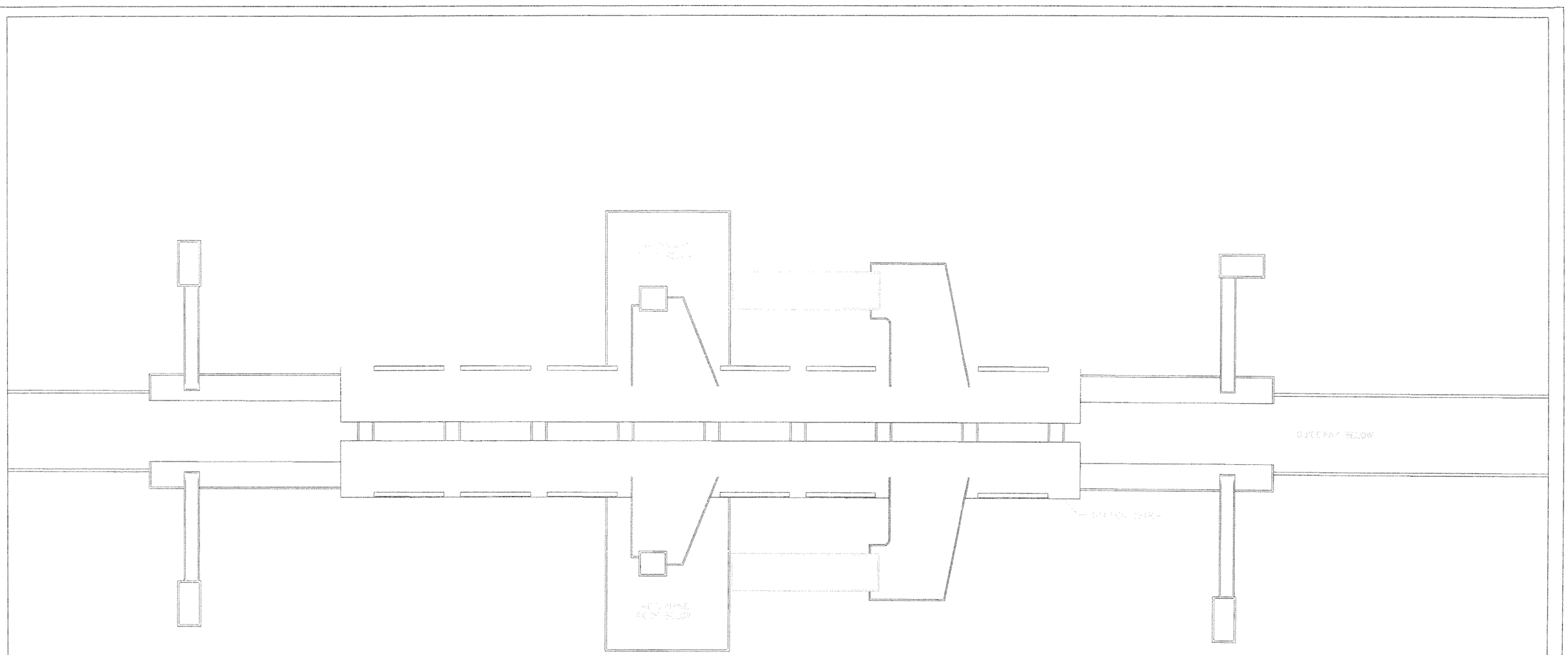

NO MECHANICAL WORK DONE ON THIS SHEET FOR THIS SUBMITTAL.

0 10 20 40

SUBJECT TO CHANGE

Designed by A.H. Date					
Drawn by A.H. Date					
Checked by G.V. Date					
Approved by G.V. Date	No.	Date	By / Chk	App.	Revisions

NORTH CORRIDOR METRORAIL EXTENSION - PRELIMINARY ENGINEERING (100% SUBMITTAL)

MIAMI-DADE COUNTY

MIAMI-DADE TRANSIT

PARSONS
7600 CORPORATE CENTER DRIVE, SUITE 500
MIAMI, FLORIDA 33126
PHONE: (786) 464-1000 FAX: (786) 845-7119
CERTIFICATE OF AUTHORIZATION NO. 1838

H.J. ROSS
201 ALHAMBRA CIRCLE SUITE 900
CORAL GABLES, FLORIDA 33134
PHONE: (305) 567-1888 / FAX: (305) 567-1771
407

Approved | Date | Approved | Date 05-05-06

MECHANICAL

NW 82ND ST. STATION MECHANICAL ROOF PLAN

Scale 1" = 40' | Drawing ME-05 | Sheet 217

G:\550515 NC ...orridor\NW 82 ST\Mech\Hvac\SHT\ME-05.dwg, 5/12/2006 1:58:02 PM, blindholr

G:\550515 No... Corridor\NW 119 ST\Mech\Hvac\SHTME-06.dwg, 5/12/2006 2:14:54 PM, blindho.

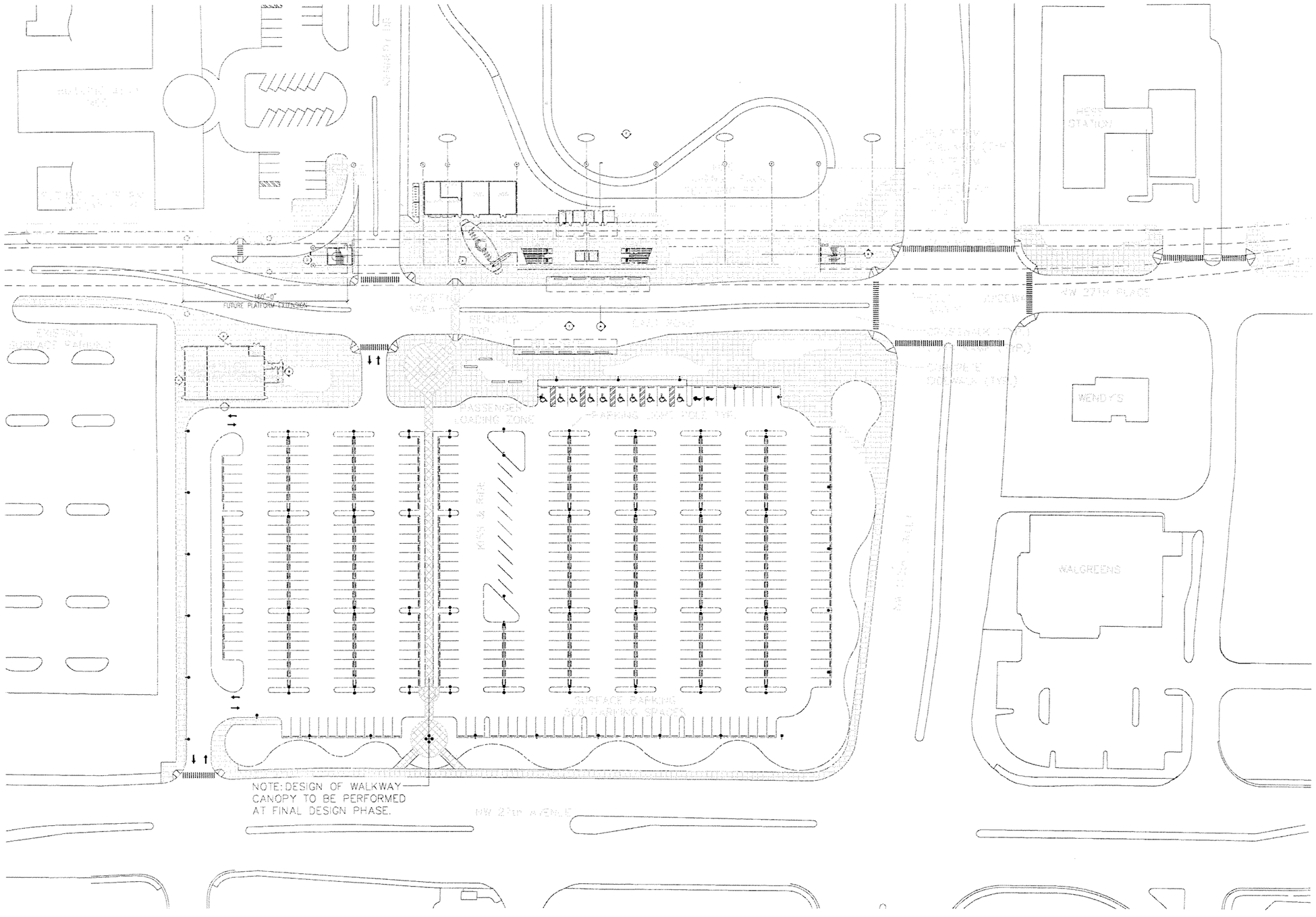

NO MECHANICAL WORK DONE ON THIS SHEET FOR THIS SUBMITTAL.

0 25 50 100

SUBJECT TO CHANGE

Designed by A.H. Date						
Drawn by A.H. Date						
Checked by G.V. Date						
Approved by G.V. Date	No.	Date	By / Chk	App.	Revisions	

NORTH CORRIDOR METRORAIL EXTENSION - PRELIMINARY ENGINEERING (100% SUBMITTAL)

MIAMI-DADE COUNTY

MIAMI-DADE TRANSIT

PARSONS
7600 CORPORATE CENTER DRIVE, SUITE 500
MIAMI, FLORIDA 33126
PHONE: (786) 464-1000 FAX: (786) 845-7119
CERTIFICATE OF AUTHORIZATION NO. 1838

H.J. ROSS
201 ALHAMBRA CIRCLE SUITE 900
CORAL GABLES, FLORIDA 33134
PHONE: (305) 567-1888 / FAX: (305) 567-1771
407

Approved	Date	Approved	Date	Scale	Drawing	Sheet
			05-05-06	1" = 100'	ME-06	218

MECHANICAL

NW 119TH ST. STATION MECHANICAL SITE PLAN

BATTERY ROOM
DX SPLIT A/C, 4.5 TONS, 880 CFM
100% O.A. A/C CONTROLLED BY BOTH THERMOSTAT AND HUMIDISTAT. NO RETURN. AIR EXHAUSTED BY 880 CFM EXPLOSION PROOF EXHAUST FAN TO BE INTERLOCKED WITH A/C.

ELECTRICAL ROOM
EXHAUST FAN 840 CFM
INTERLOCK WITH THERMOSTAT

MECHANICAL ROOM
EXHAUST FAN 840 CFM
INTERLOCK WITH THERMOSTAT

MAINTENANCE ROOM
EXHAUST FAN 240 CFM

JANITOR ROOM
EXHAUST FAN 240 CFM
CONSTANT OPERATION

TRASH ROOM
EXHAUST FAN 350 CFM

TC&C ROOM
DX SPLIT A/C
3 TONS, 1200 CFM

RESTROOM
EXHAUST FAN 200 CFM
INTERLOCK WITH LIGHT SWITCH

RESTROOM
EXHAUST FAN 200 CFM
INTERLOCK WITH LIGHT SWITCH

REVENUE
MINI DX SPLIT A/C
1 TON, 170 CFM

0 10 20 40

SUBJECT TO CHANGE

NORTH CORRIDOR METRORAIL EXTENSION - PRELIMINARY ENGINEERING (100% SUBMITTAL)

MECHANICAL

Designed by A.H. Date
Drawn by A.H. Date
Checked by G.V. Date
Approved by G.V. Date

No.	Date	By / Chk	App.	Revisions

MIAMI-DADE COUNTY
MIAMI-DADE TRANSIT

PARSONS
7600 CORPORATE CENTER DRIVE, SUITE 500
MIAMI, FLORIDA 33126
PHONE: (786) 464-1000 FAX: (786) 845-7119
CERTIFICATE OF AUTHORIZATION NO. 1838

H.J. ROSS
201 ALHAMBRA CIRCLE SUITE 900
CORAL GABLES, FLORIDA 33134
PHONE: (305) 567-1888 / FAX: (305) 567-1771
407

Approved | Date | Approved | Date 05-05-06

NW 119TH ST. STATION MECHANICAL PLAZA LEVEL PLAN

Scale 1"=40' | Drawing ME-07 | Sheet 219

G:\550515 No...Corridor\NW 119 ST\Mech\Hvac\SHT\ME-07.dwg, 5/12/2006 2:15:04 PM, blindho...

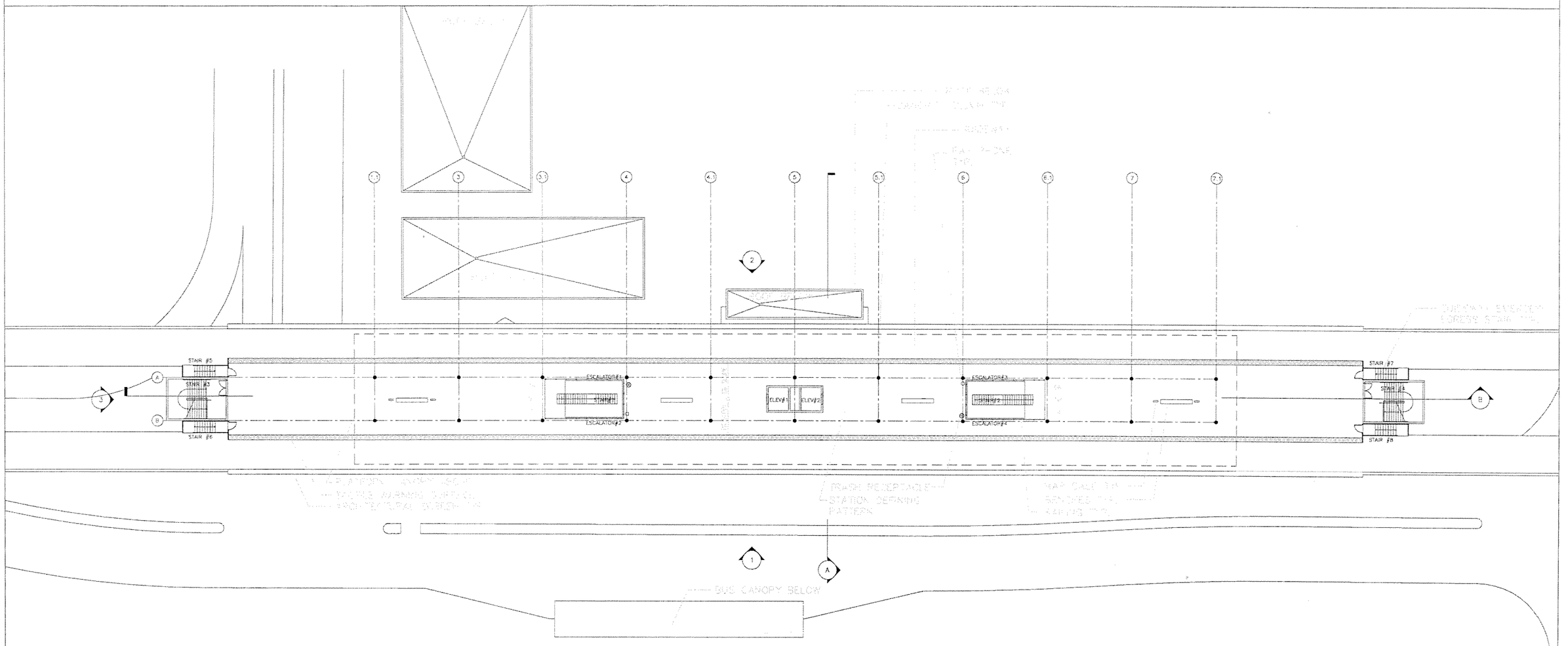

0 10 20 40

SUBJECT TO CHANGE

Designed by A.H. Date						
Drawn by A.H. Date						
Checked by G.V. Date						
Approved by G.V. Date	No.	Date	By / Chk	App.	Revisions	

NORTH CORRIDOR METRORAIL EXTENSION - PRELIMINARY ENGINEERING (100% SUBMITTAL)

MIAMI-DADE COUNTY

MIAMI-DADE TRANSIT

PARSONS
7600 CORPORATE CENTER DRIVE, SUITE 500
MIAMI, FLORIDA 33126
PHONE: (786) 464-1000 FAX: (786) 845-7119
CERTIFICATE OF AUTHORIZATION NO. 1838

H.J. ROSS
201 ALHAMBRA CIRCLE SUITE 900
CORAL GABLES, FLORIDA 33134
PHONE: (305) 567-1888 / FAX: (305) 567-1771
407

Approved	Date	Approved	Date
			05-05-06

MECHANICAL

NW 119TH ST. STATION MECHANICAL PLATFORM PLAN

Scale	Drawing	Sheet
1" = 40'	ME-08	220

G:\550515 North Corridor\NW 119 ST\Mech\Hvac\SHT\ME-08.dwg, 5/12/2006 2:15:13 PM, blindhol

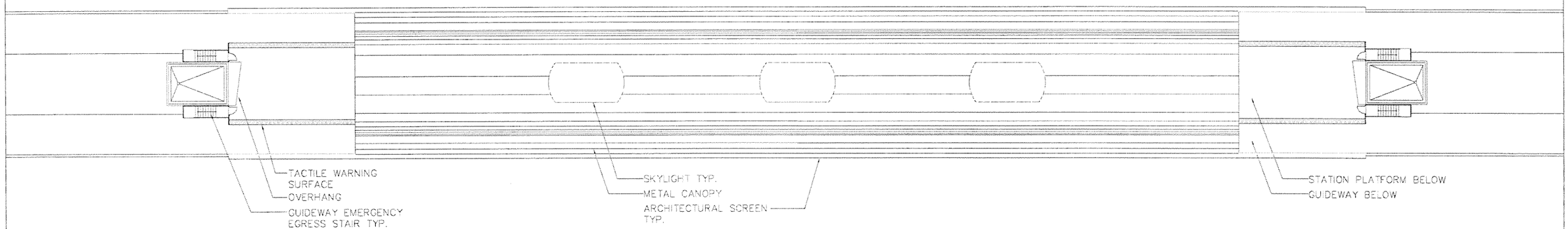

NO MECHANICAL WORK DONE ON THIS SHEET FOR THIS SUBMITTAL.

0 10 20 40

SUBJECT TO CHANGE

Designed by A.H. Date

Drawn by A.H. Date

Checked by G.V. Date

Approved by G.V. Date

No.	Date	By / Chk	App.	Revisions

NORTH CORRIDOR METRORAIL EXTENSION - PRELIMINARY ENGINEERING (100% SUBMITTAL)

MIAMI-DADE COUNTY

MIAMI-DADE TRANSIT

PARSONS
7600 CORPORATE CENTER DRIVE, SUITE 500
MIAMI, FLORIDA 33126
PHONE: (786) 464-1000 FAX: (786) 845-7119
CERTIFICATE OF AUTHORIZATION NO. 1838

Approved _____ Date _____

H.J. ROSS
201 ALHAMBRA CIRCLE SUITE 900
CORAL GABLES, FLORIDA 33134
PHONE: (305) 567-1888 / FAX: (305) 567-1771
407

Approved _____ Date 05-05-06

MECHANICAL

NW 119TH ST. STATION MECHANICAL ROOF PLAN

Scale 1"=40' Drawing ME-09 Sheet 221

G:\550515 North Corridor\NW 119 ST\Mech\Hvac\SHTME-09.dwg, 5/15/2006 7:24:11 AM, blindhoi

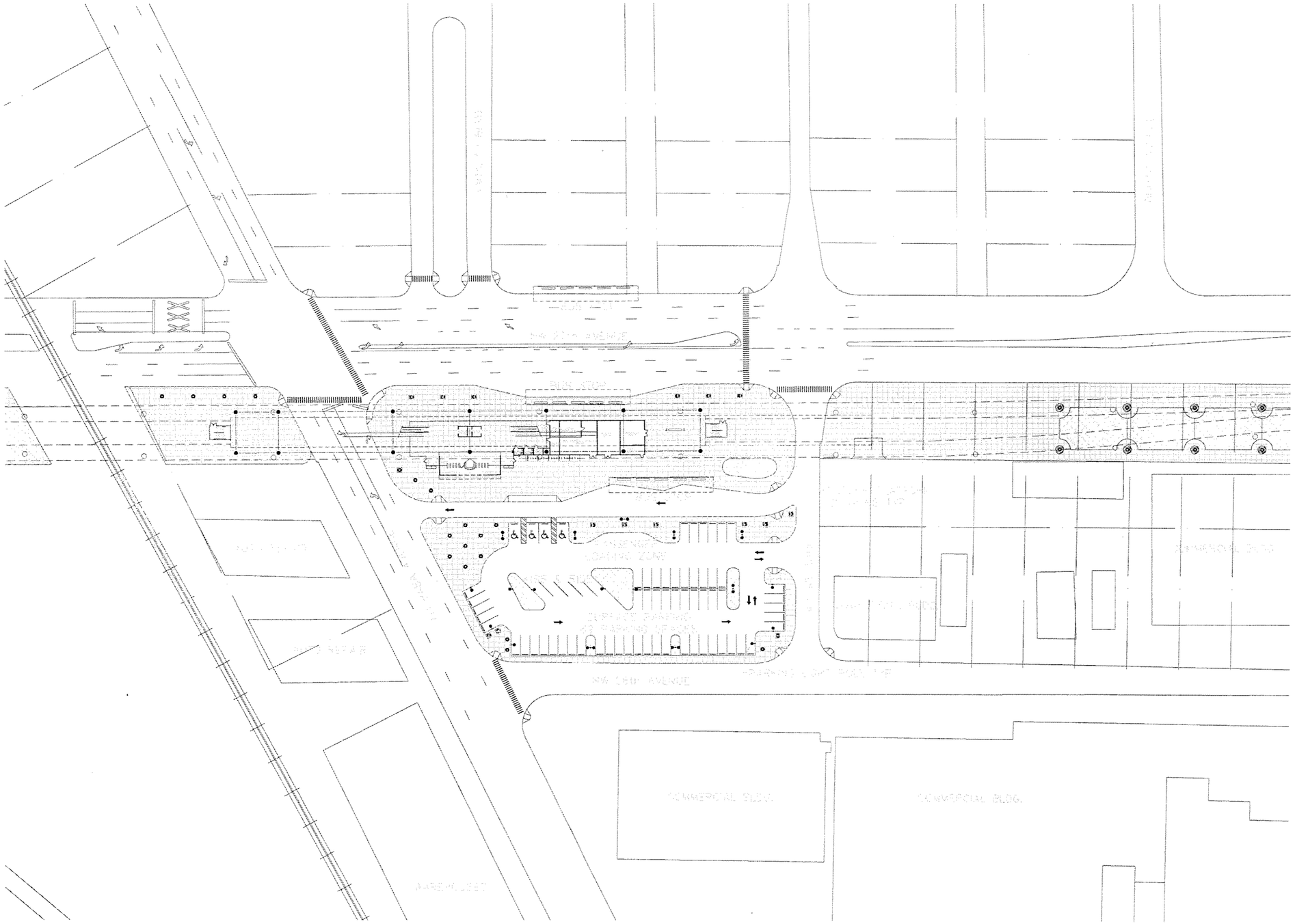

NO MECHANICAL WORK DONE ON THIS SHEET FOR THIS SUBMITTAL.

0 25 50 100

SUBJECT TO CHANGE

Designed by A.H.	Date					
Drawn by A.H.	Date					
Checked by G.V.	Date					
Approved by G.V.	Date	No.	Date	By / Chk	App.	Revisions

NORTH CORRIDOR METRORAIL EXTENSION - PRELIMINARY ENGINEERING (100% SUBMITTAL)

MIAMI-DADE COUNTY

MIAMI-DADE TRANSIT

PARSONS
7600 CORPORATE CENTER DRIVE, SUITE 500
MIAMI, FLORIDA 33126
PHONE: (786) 464-1000 FAX: (786) 845-7119
CERTIFICATE OF AUTHORIZATION NO. 1838

Approved | Date

H.J. ROSS
201 ALHAMBRA CIRCLE SUITE 900
CORAL GABLES, FLORIDA 33134
PHONE: (305) 567-1888 / FAX: (305) 567-1771
407

Approved | Date 05-05-06

MECHANICAL

NW ALI BABA AVE. STATION MECHANICAL SITE PLAN

Scale 1" = 100' | Drawing ME-10 | Sheet 222

G:\550515 North Corridor\NW 143 ST\Mech\Hvac\SHT\ME-10.dwg, 5/12/2006 2:31:00 PM, blindho.

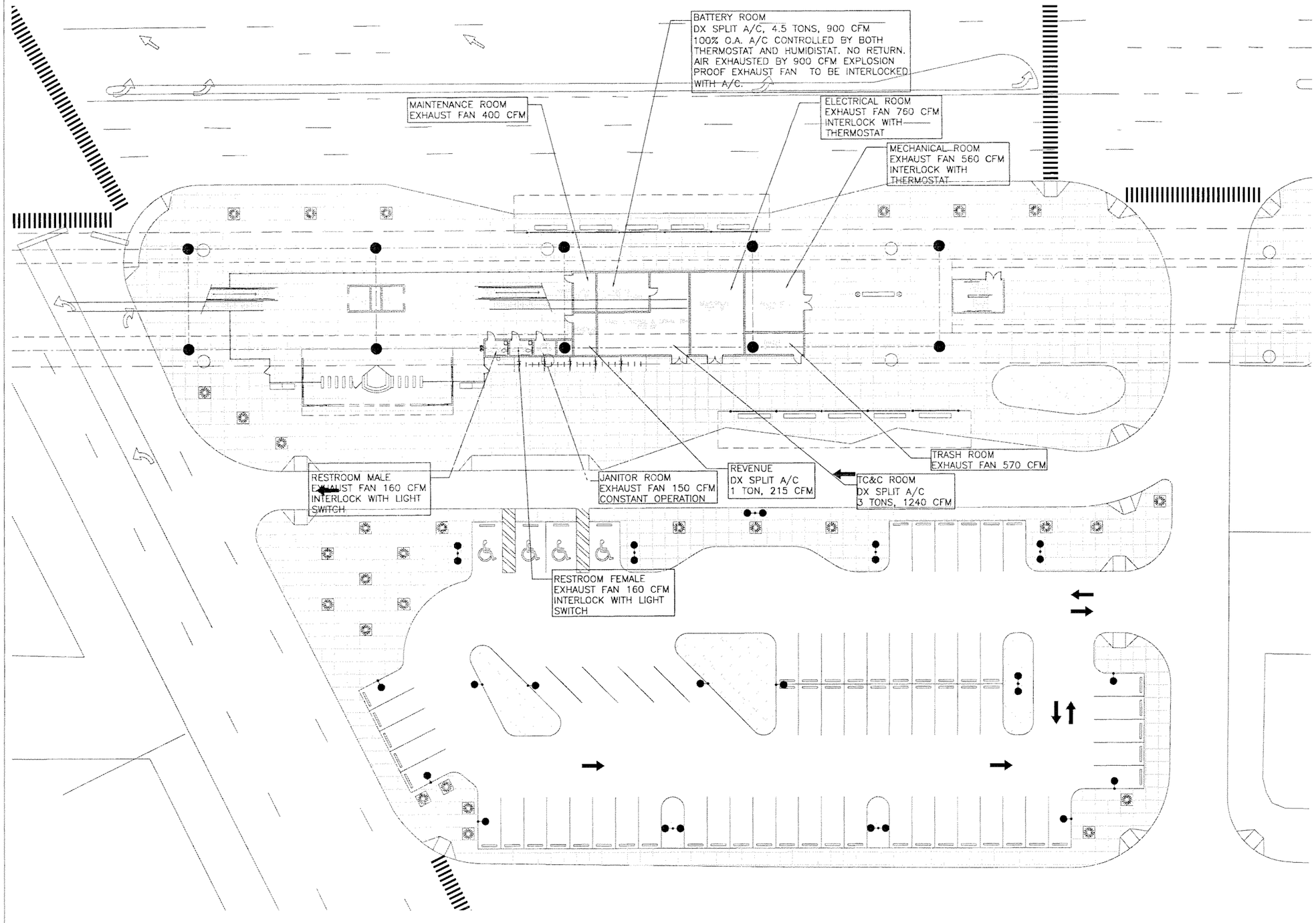

SUBJECT TO CHANGE

G:\550515 No... Corridor\NW 143 ST\Mech\Hvac\SHT\ME-11.dwg, 5/12/2006 2:31:09 PM, blindhc

Designed by A.H. Date							
Drawn by A.H. Date							
Checked by G.V Date							
Approved by G.V. Date	No.	Date	By / Chk	App.	Revisions		

NORTH CORRIDOR METRORAIL EXTENSION - PRELIMINARY ENGINEERING (100% SUBMITTAL)

MIAMI-DADE COUNTY

MIAMI-DADE TRANSIT

PARSONS
7600 CORPORATE CENTER DRIVE, SUITE 500
MIAMI, FLORIDA 33126
PHONE: (786) 464-1000 FAX: (786) 845-7119
CERTIFICATE OF AUTHORIZATION NO. 1838

Approved | Date

H.J. ROSS
201 ALHAMBRA CIRCLE SUITE 900
CORAL GABLES, FLORIDA 33134
PHONE: (305) 567-1888 / FAX: (305) 567-1771
407

Approved | Date 05-05-06

MECHANICAL

NW ALI BABA AVE. STATION MECHANICAL PLAZA LEVEL PLAN

Scale 1" = 40' | Drawing ME-11 | Sheet 223

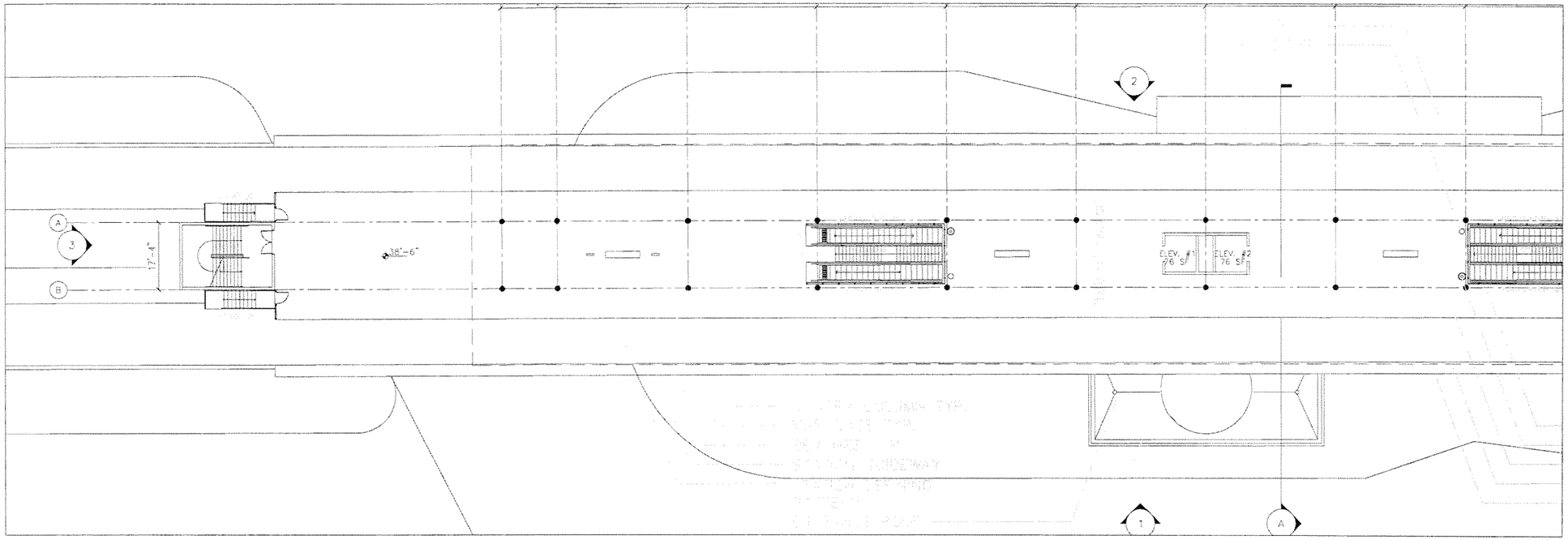

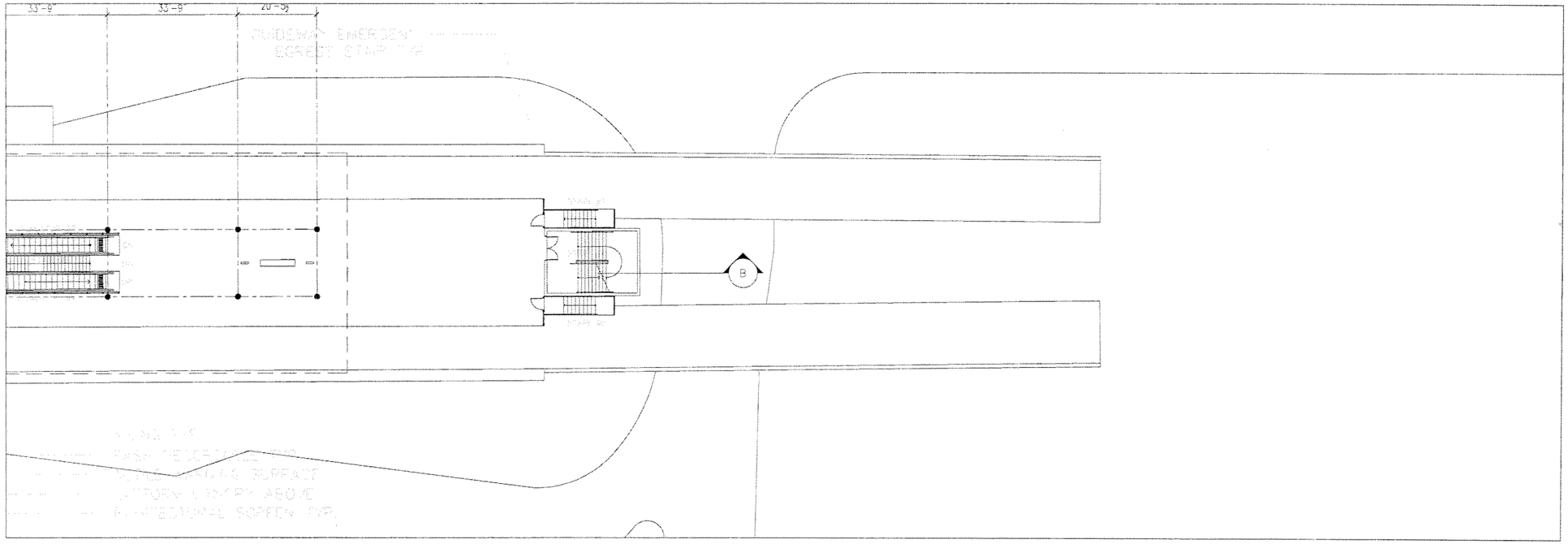

NO MECHANICAL WORK DONE ON THIS SHEET FOR THIS SUBMITTAL.

0 8 16 32

SCALE: 1/16" = 1'-0"

SUBJECT TO CHANGE

G:\550515 NC...Corridor\NW 143 ST\Mech\Hvac\SHT\ME-12.dwg, 5/12/2006 2:31:13 PM, blindhc

Designed by A.H. Date						
Drawn by A.H. Date						
Checked by G.V. Date						
Approved by G.V. Date	No.	Date	By / Chk	App.	Revisions	

NORTH CORRIDOR METRORAIL EXTENSION - PRELIMINARY ENGINEERING (100% SUBMITTAL)

MIAMI-DADE COUNTY

MIAMI-DADE TRANSIT

PARSONS
7600 CORPORATE CENTER DRIVE, SUITE 500
MIAMI, FLORIDA 33126
PHONE: (786) 464-1000 FAX: (786) 845-7119
CERTIFICATE OF AUTHORIZATION NO. 1838

H.J. ROSS
201 ALHAMBRA CIRCLE SUITE 900
CORAL GABLES, FLORIDA 33134
PHONE: (305) 567-1888 / FAX: (305) 567-1771
407

Approved	Date	Approved	Date	Scale	Drawing	Sheet
			05-05-06	SEE PLAN	ME-12	224

MECHANICAL

NW ALI BABA AVE. STATION MECHANICAL PLATFORM PLAN

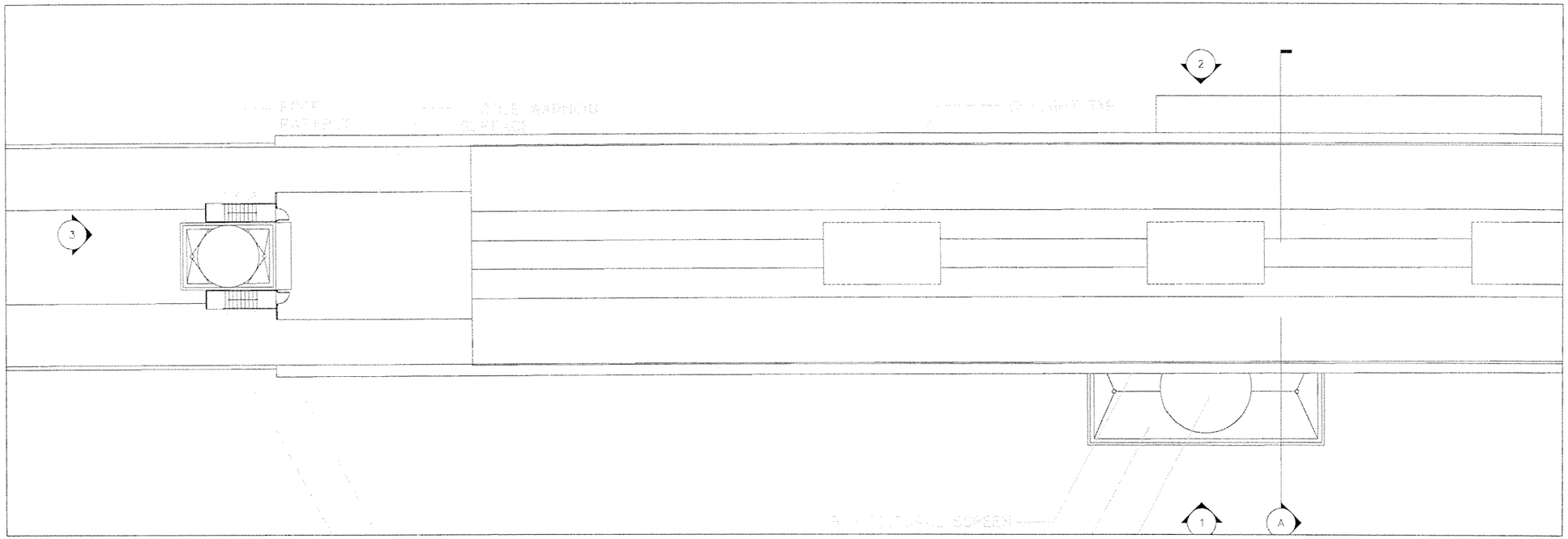

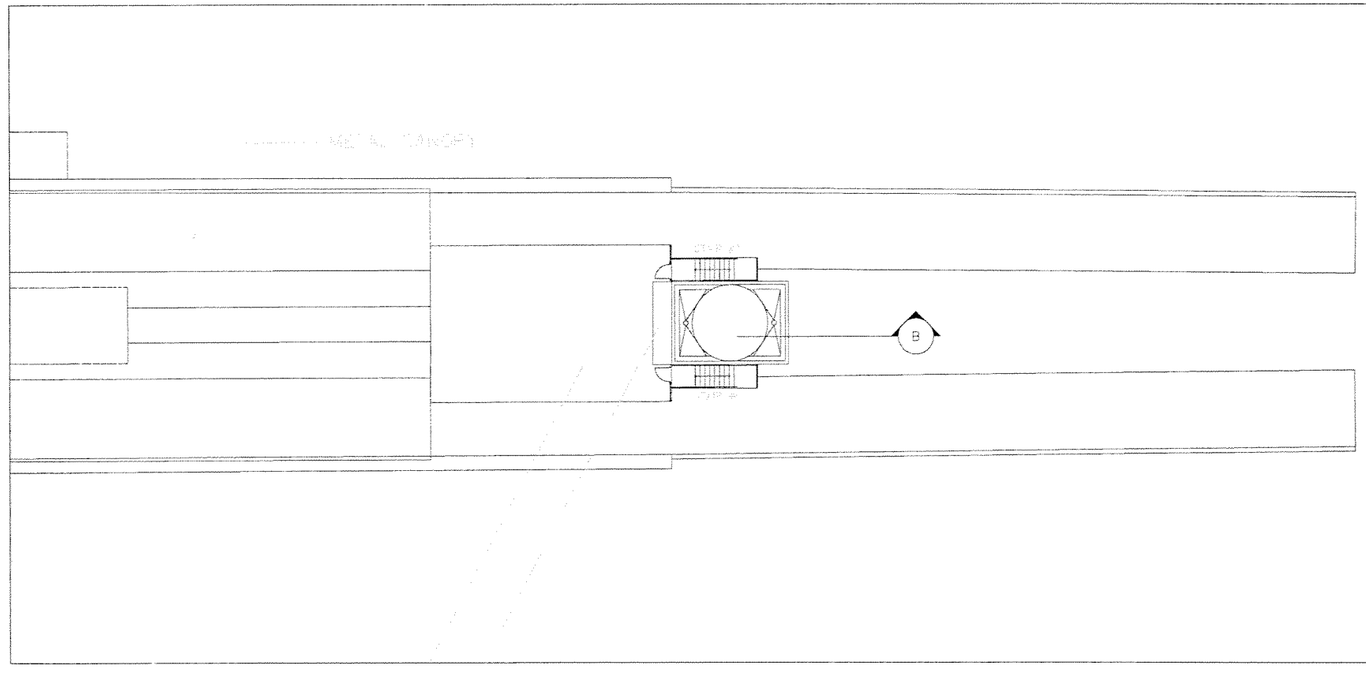

NO MECHANICAL WORK DONE ON THIS SHEET FOR THIS SUBMITTAL.

0 8 16 32

SCALE: 1/16" = 1'-0"

SUBJECT TO CHANGE

Designed by A.H. Date						
Drawn by A.H. Date						
Checked by G.V. Date						
Approved by G.V. Date	No.	Date	By / Chk	App.	Revisions	

NORTH CORRIDOR METRORAIL EXTENSION - PRELIMINARY ENGINEERING (100% SUBMITTAL)

MIAMI-DADE COUNTY

MIAMI-DADE TRANSIT

PARSONS
7500 CORPORATE CENTER DRIVE, SUITE 500
MIAMI, FLORIDA 33126
PHONE: (786) 464-1000 FAX: (786) 845-7119
CERTIFICATE OF AUTHORIZATION NO. 1838

H.J. ROSS
201 ALHAMBRA CIRCLE SUITE 900
CORAL GABLES, FLORIDA 33134
PHONE: (305) 567-1888 / FAX: (305) 567-1771
407

Approved	Date	Approved	Date	Scale	Drawing	Sheet
			05-05-06	SEE PLAN	ME-13	225

MECHANICAL

NW ALI BABA AVE. STATION MECHANICAL ROOF PLAN

G:\550515 No...\Corridor\NW 143 ST\Mech\Hvac\SHT\ME-13.dwg, 5/12/2006 2:31:18 PM, blindho.

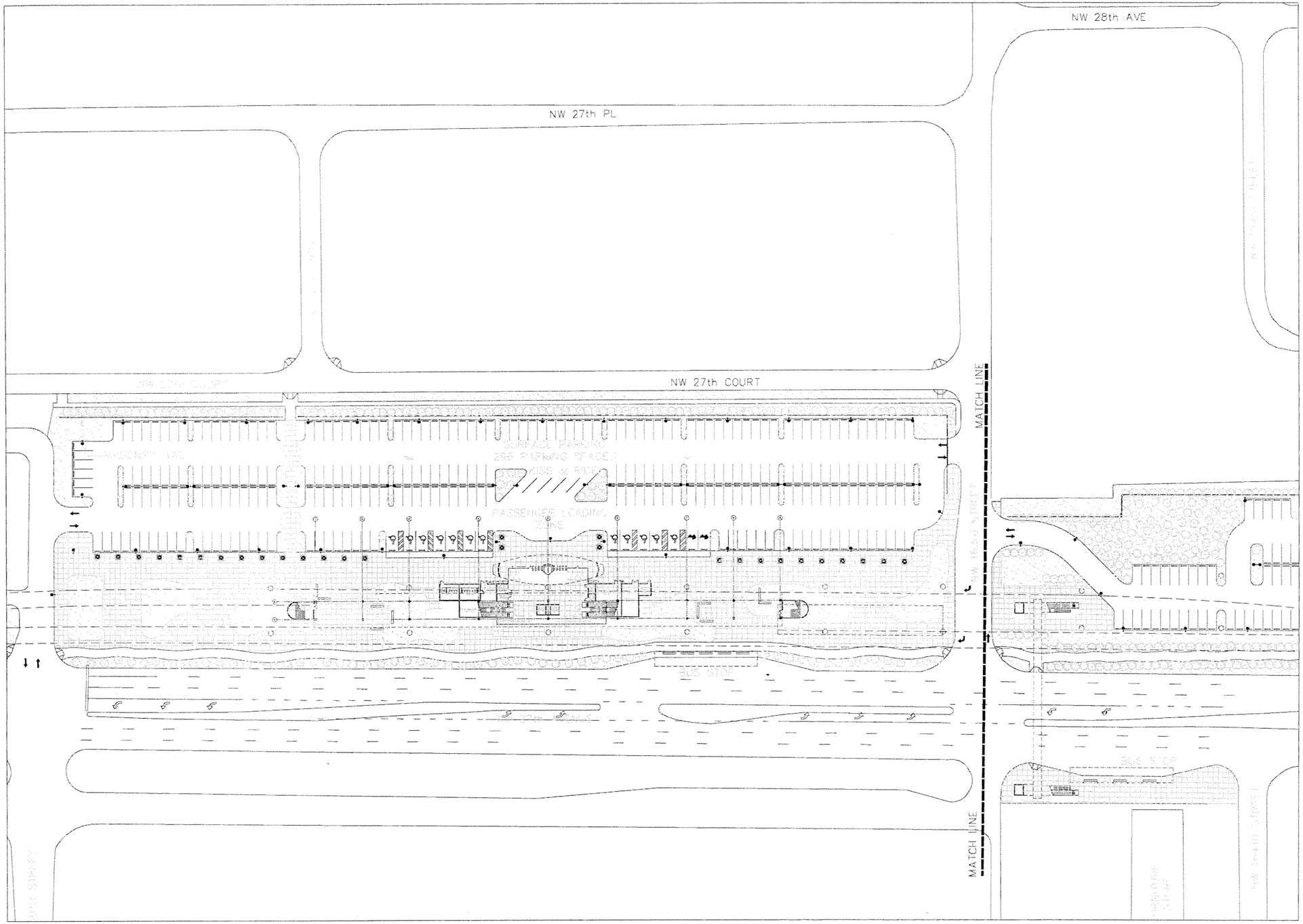

NO MECHANICAL WORK DONE ON THIS SHEET FOR THIS SUBMITTAL.

0 25 50 100

SUBJECT TO CHANGE

G:\550515 No... ...orridor\NW 163 ST\Mech\Hvac\SHTME-14.dwg, 5/12/2006 2:48:30 PM, blindho...

Designed by A.H. Date							
Drawn by A.H. Date							
Checked by G.V. Date							
Approved by G.V. Date	No.	Date	By / Chk	App.	Revisions		

NORTH CORRIDOR METRORAIL EXTENSION - PRELIMINARY ENGINEERING (100% SUBMITTAL)

MIAMI-DADE COUNTY

MIAMI-DADE TRANSIT

PARSONS
7600 CORPORATE CENTER DRIVE, SUITE 500
MIAMI, FLORIDA 33126
PHONE: (786) 464-1000 FAX: (786) 845-7119
CERTIFICATE OF AUTHORIZATION NO. 1838

H.J. ROSS
201 ALHAMBRA CIRCLE SUITE 900
CORAL GABLES, FLORIDA 33134
PHONE: (305) 567-1888 / FAX: (305) 567-1771
407

Approved	Date	Approved	Date
			05-05-06

MECHANICAL

NW 163RD ST. STATION MECHANICAL SITE PLAN

Scale 1" = 100' | Drawing ME-14 | Sheet 226

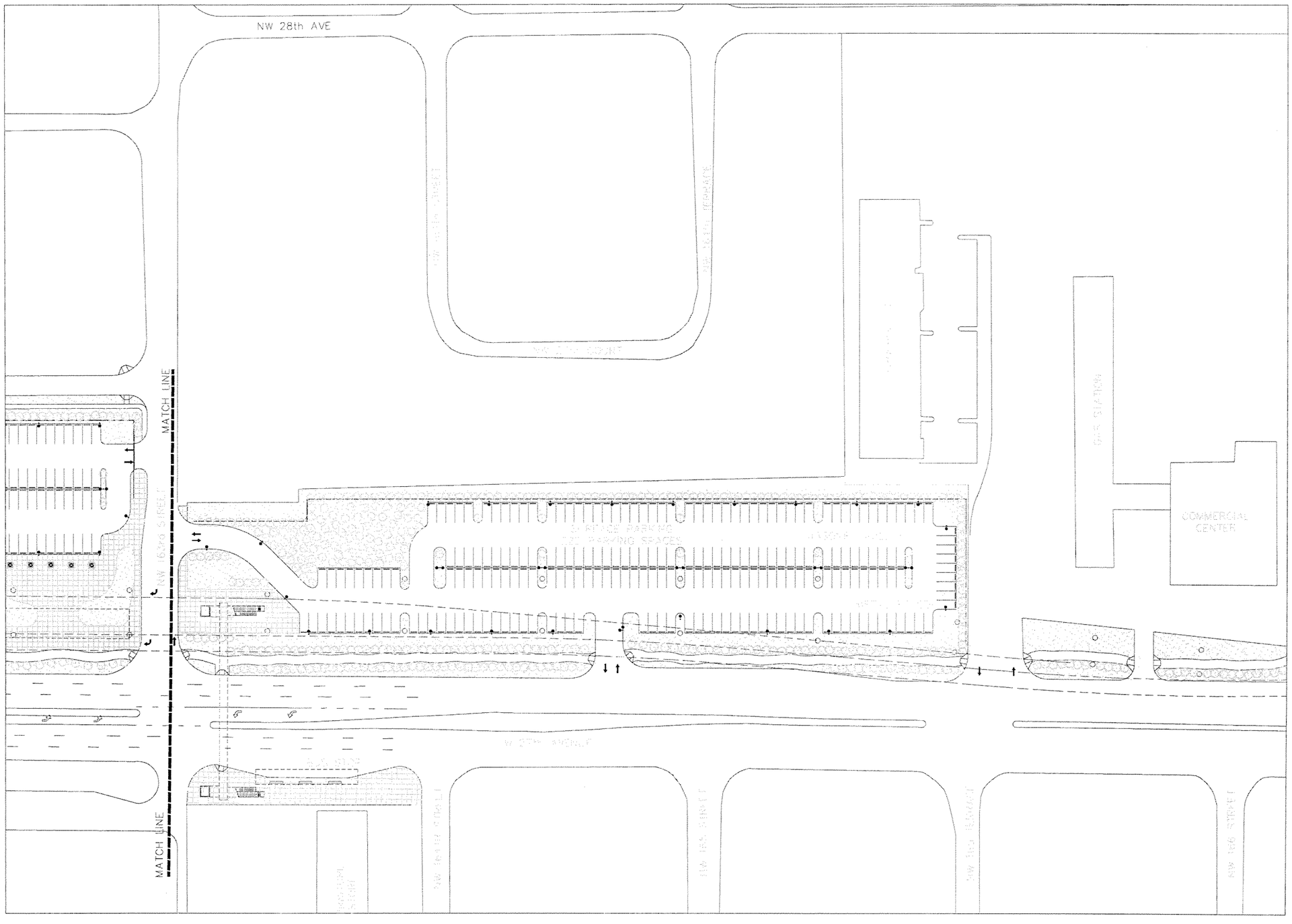

NO MECHANICAL WORK DONE ON THIS SHEET FOR THIS SUBMITTAL.

0 25 50 100

SUBJECT TO CHANGE

Designed by A.H.	Date					
Drawn by A.H.	Date					
Checked by G.V.	Date					
Approved by G.V.	Date	No.	Date	By / Chk	App.	Revisions

NORTH CORRIDOR METRORAIL EXTENSION - PRELIMINARY ENGINEERING (100% SUBMITTAL)

MIAMI-DADE COUNTY

MIAMI-DADE TRANSIT

PARSONS
7600 CORPORATE CENTER DRIVE, SUITE 500
MIAMI, FLORIDA 33126
PHONE: (786) 464-1000 FAX: (786) 845-7119
CERTIFICATE OF AUTHORIZATION NO. 1838

Approved | Date

H.J. ROSS
201 ALHAMBRA CIRCLE SUITE 900
CORAL GABLES, FLORIDA 33134
PHONE: (305) 567-1888 / FAX: (305) 567-1771
407

Approved | Date 05-05-06

MECHANICAL

NW 163RD ST. STATION MECHANICAL SITE PLAN-cont'd

Scale 1"=100' | Drawing ME-15 | Sheet 227

G:\550515 No... Corridor\NW 163 ST\Mech\Hvac\SHT\ME-15.dwg, 5/12/2006 2:48:41 PM, blindho...

G:\550515 No... Corridor\NW 163 STMechHvacISHTME-16.dwg, 5/12/2006 2:48:51 PM, blindho.

BATTERY ROOM
DX SPLIT A/C, 4.5 TONS, 900 CFM
100% O.A. A/C CONTROLLED BY BOTH THERMOSTAT AND HUMIDISTAT. NO RETURN. AIR EXHAUSTED BY 900 CFM EXPLOSION PROOF EXHAUST FAN TO BE INTERLOCKED WITH A/C.

REVENUE
MINI DX SPLIT A/C
4 TON, 1400 CFM

MAINTENANCE ROOM
EXHAUST FAN 825 CFM

ELECTRICAL ROOM
EXHAUST FAN 1315 CFM
INTERLOCK WITH THERMOSTAT

TRASH ROOM
EXHAUST FAN 410 CFM

JANITORI ROOM
EXHAUST FAN 240 CFM
CONSTANT OPERATION

RESTROOM MALE
EXHAUST FAN 150 CFM
INTERLOCK WITH LIGHT SWITCH

TC&C ROOM
DX SPLIT A/C
3 TONS, 1200 CFM

RESTROOM FEMALE
EXHAUST FAN 150 CFM
INTERLOCK WITH LIGHT SWITCH

MECHANICAL ROOM
EXHAUST FAN 540 CFM
INTERLOCK WITH THERMOSTAT

0 10 20 40

SUBJECT TO CHANGE

Designed by A.H. Date					
Drawn by A.H. Date					
Checked by G.V. Date					
Approved by G.V. Date	No.	Date	By / Chk	App.	Revisions

NORTH CORRIDOR METRORAIL EXTENSION - PRELIMINARY ENGINEERING (100% SUBMITTAL)

MIAMI-DADE COUNTY

MIAMI-DADE TRANSIT

PARSONS
7600 CORPORATE CENTER DRIVE, SUITE 500
MIAMI, FLORIDA 33126
PHONE: (786) 464-1000 FAX: (786) 645-7119
CERTIFICATE OF AUTHORIZATION NO. 1838

Approved | Date

H.J. ROSS
201 ALHAMBRA CIRCLE SUITE 900
CORAL GABLES, FLORIDA 33134
PHONE: (305) 567-1888 / FAX: (305) 567-1771
407

Approved | Date 05-05-06

MECHANICAL

NW 163RD ST. STATION MECHANICAL PLAZA LEVEL PLAN

Scale 1"=40' | Drawing ME-16 | Sheet 228

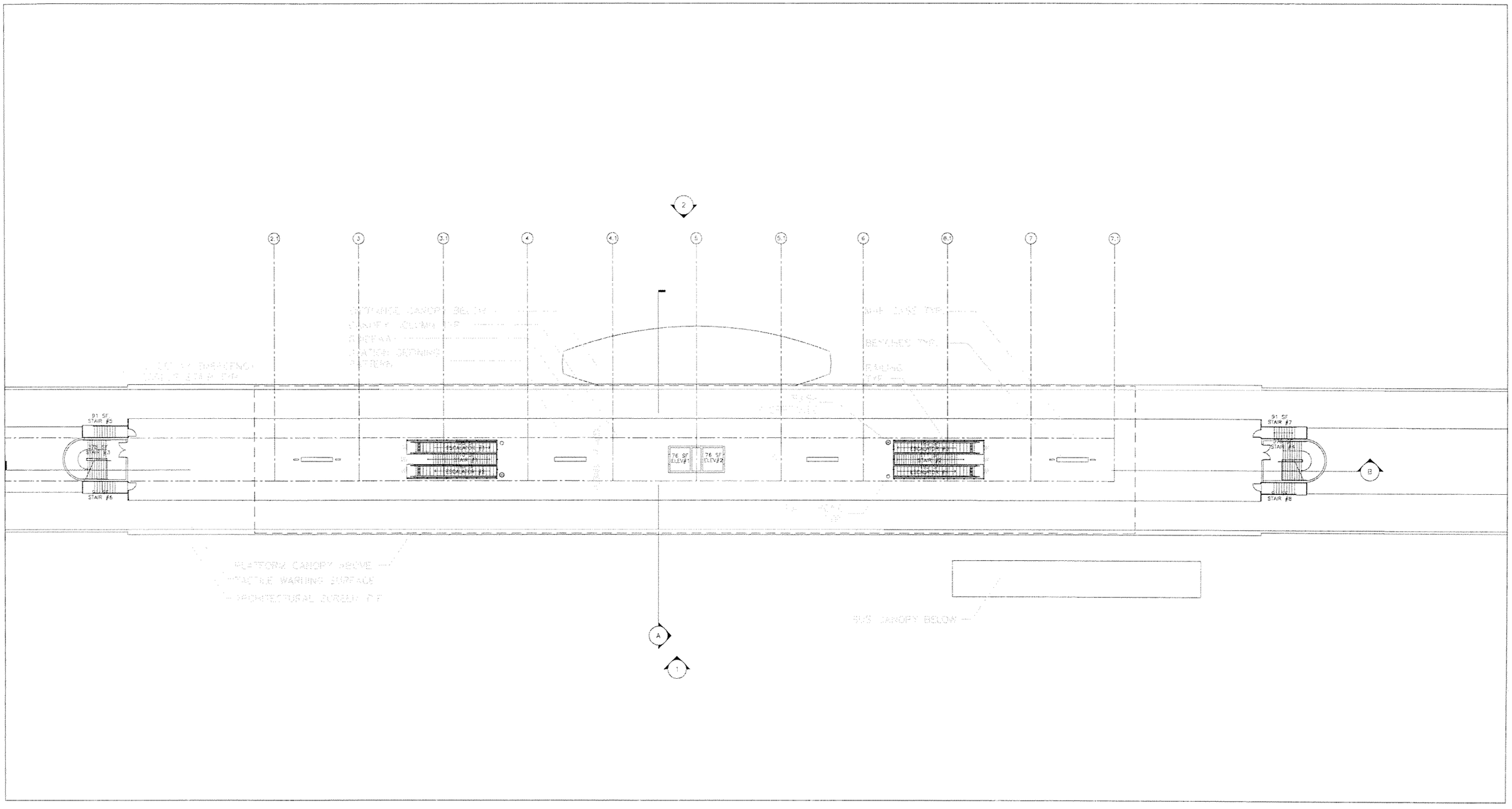

NO MECHANICAL WORK DONE ON THIS SHEET FOR THIS SUBMITTAL.

0 10 20 40

SUBJECT TO CHANGE

Designed by A.H. Date						
Drawn by A.H. Date						
Checked by G.V. Date						
Approved by G.V. Date	No.	Date	By / Chk	App.	Revisions	

NORTH CORRIDOR METRORAIL EXTENSION - PRELIMINARY ENGINEERING (100% SUBMITTAL)

MIAMI-DADE COUNTY

MIAMI-DADE TRANSIT

PARSONS
7600 CORPORATE CENTER DRIVE, SUITE 500
MIAMI, FLORIDA 33126
PHONE: (786) 464-1000 FAX: (786) 845-7119
CERTIFICATE OF AUTHORIZATION NO. 1838

H.J. ROSS
201 ALHAMBRA CIRCLE SUITE 900
CORAL GABLES, FLORIDA 33134
PHONE: (305) 567-1888 / FAX: (305) 567-1771
407

Approved | Date | Approved | Date 05-05-06

MECHANICAL

NW 163RD ST. STATION MECHANICAL PLATFORM LEVEL PLAN

Scale 1"=40' | Drawing ME-17 | Sheet 229

G:\550515 No...orridor\NW 163 ST\Mech\Hvac\SHT\ME-17.dwg, 5/12/2006 2:49:04 PM, blindho.

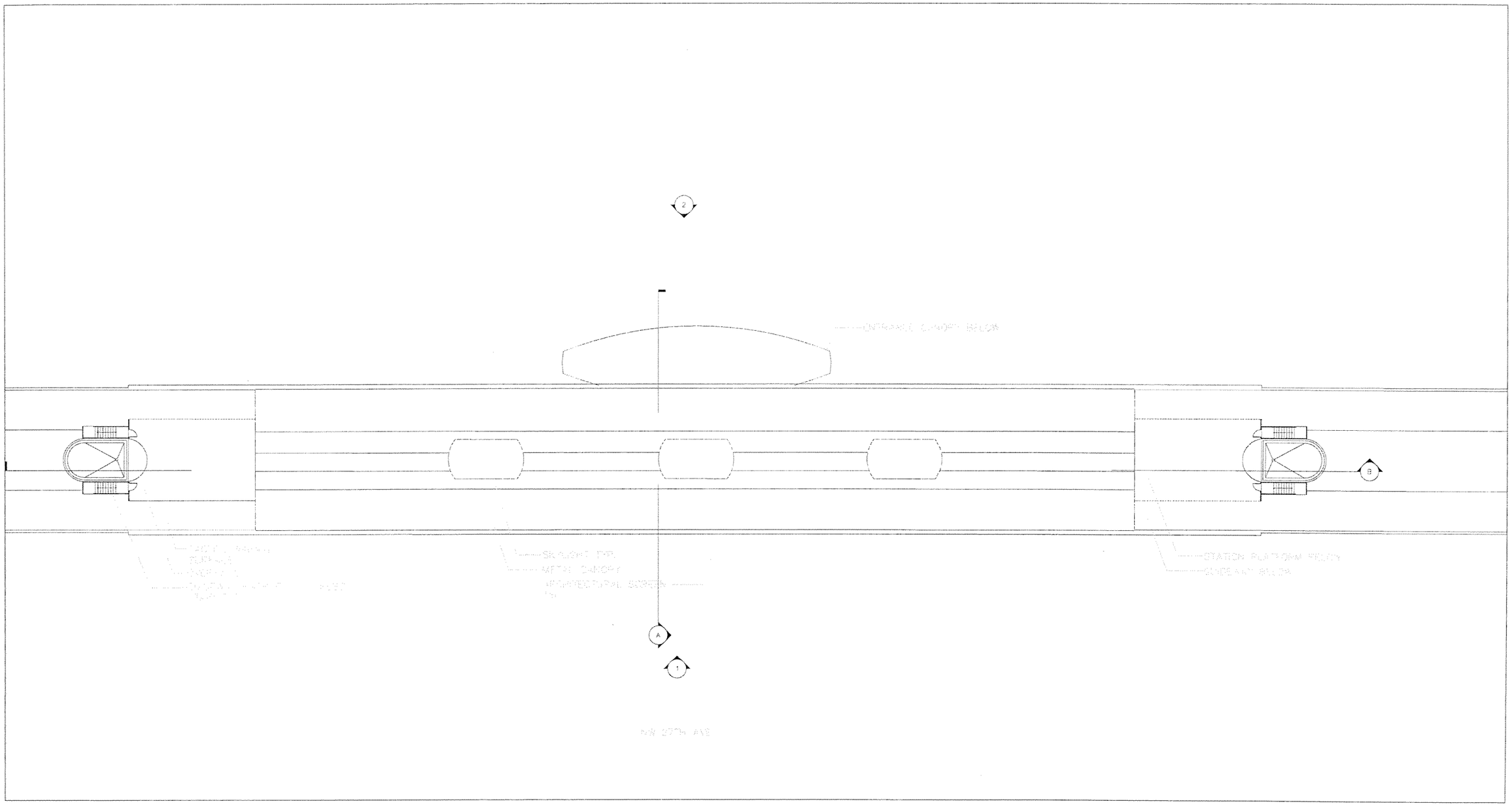

NO MECHANICAL WORK DONE ON THIS SHEET FOR THIS SUBMITTAL.

0 10 20 40

SUBJECT TO CHANGE

Designed by A.H. Date						NORTH CORRIDOR METRORAIL EXTENSION - PRELIMINARY ENGINEERING (100% SUBMITTAL)	MECHANICAL
Drawn by A.H. Date							
Checked by G.V. Date							
Approved by G.V. Date	No.	Date	By / Chk	App.	Revisions	MIAMI-DADE COUNTY / MIAMI-DADE TRANSIT	NW 163RD ST. STATION MECHANICAL ROOF LEVEL PLAN

PARSONS
7600 CORPORATE CENTER DRIVE, SUITE 500
MIAMI, FLORIDA 33126
PHONE: (786) 464-1000 FAX: (786) 845-7119
CERTIFICATE OF AUTHORIZATION NO. 1838

H.J. ROSS
201 ALHAMBRA CIRCLE SUITE 900
CORAL GABLES, FLORIDA 33134
PHONE: (305) 567-1888 / FAX: (305) 567-1771
407

Approved | Date | Approved | Date 05-05-06 | Scale 1" = 40' | Drawing ME-18 | Sheet 230

G:\550515 North Corridor\NW 163 ST\Mech\Hvac\SHT\ME-18.dwg, 5/12/2006 2:49:09 PM, blindhol

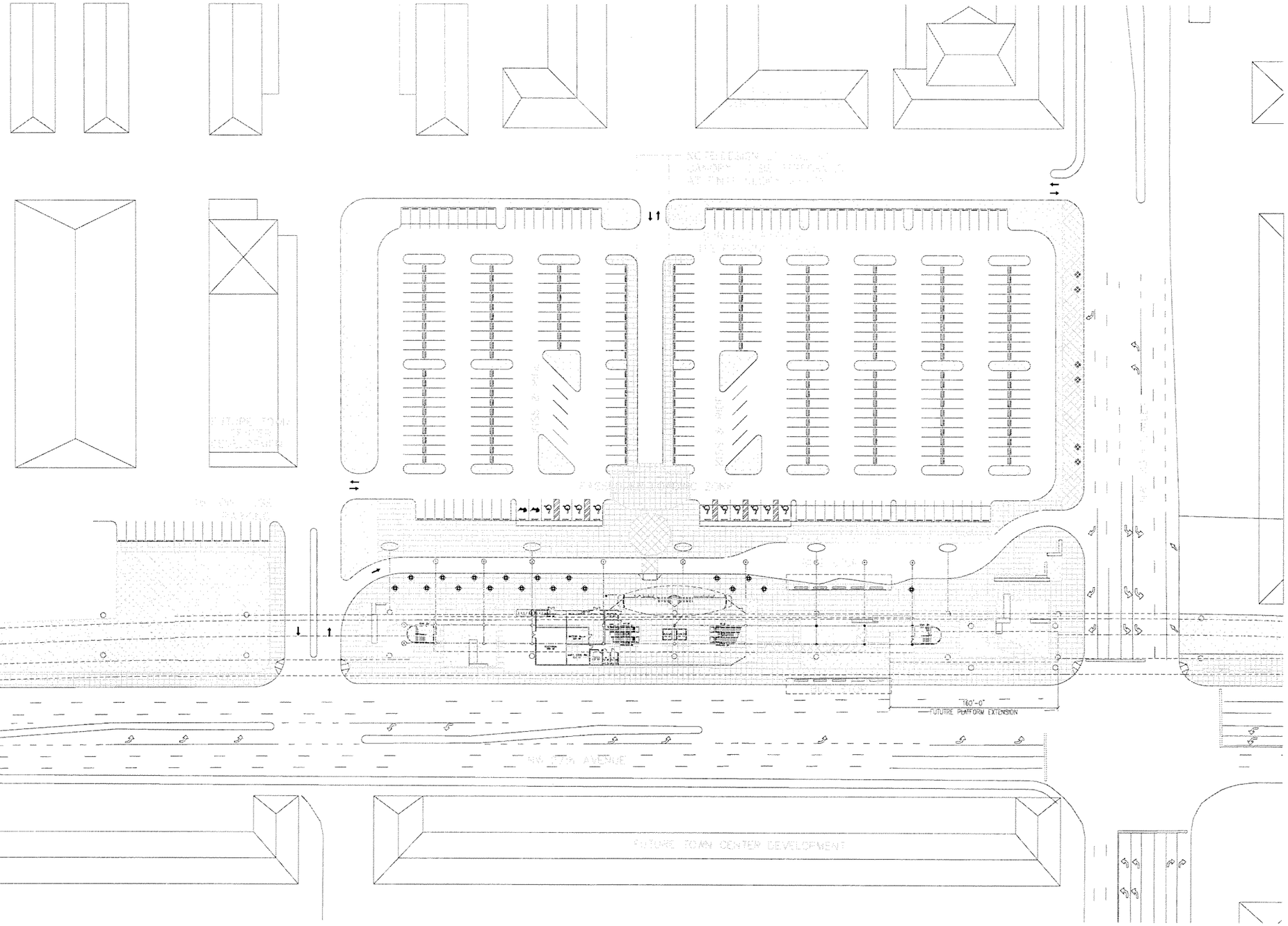

NO MECHANICAL WORK DONE ON THIS SHEET FOR THIS SUBMITTAL.

0 25 50 100

SUBJECT TO CHANGE

Designed by A.H. Date					
Drawn by A.H. Date					
Checked by G.V. Date					
Approved by G.V. Date	No.	Date	By / Chk	App.	Revisions

NORTH CORRIDOR METRORAIL EXTENSION - PRELIMINARY ENGINEERING (100% SUBMITTAL)

MIAMI-DADE COUNTY

MIAMI-DADE TRANSIT

PARSONS
7600 CORPORATE CENTER DRIVE, SUITE 500
MIAMI, FLORIDA 33126
PHONE: (786) 464-1000 FAX: (786) 845-7119
CERTIFICATE OF AUTHORIZATION NO. 1838

H.J. ROSS
201 ALHAMBRA CIRCLE SUITE 900
CORAL GABLES, FLORIDA 33134
PHONE: (305) 567-1888 / FAX: (305) 567-1771
407

Approved	Date	Approved	Date
			05-05-06

MECHANICAL

NW 183RD ST. STATION MECHANCAL SITE PLAN

Scale	Drawing	Sheet
1" = 100'	ME-19	23

G:\550515 N... Corridor\NW 183 STMech\Hvac\SHTME-19.dwg, 5/12/2006 3:24:07 PM, blindhc

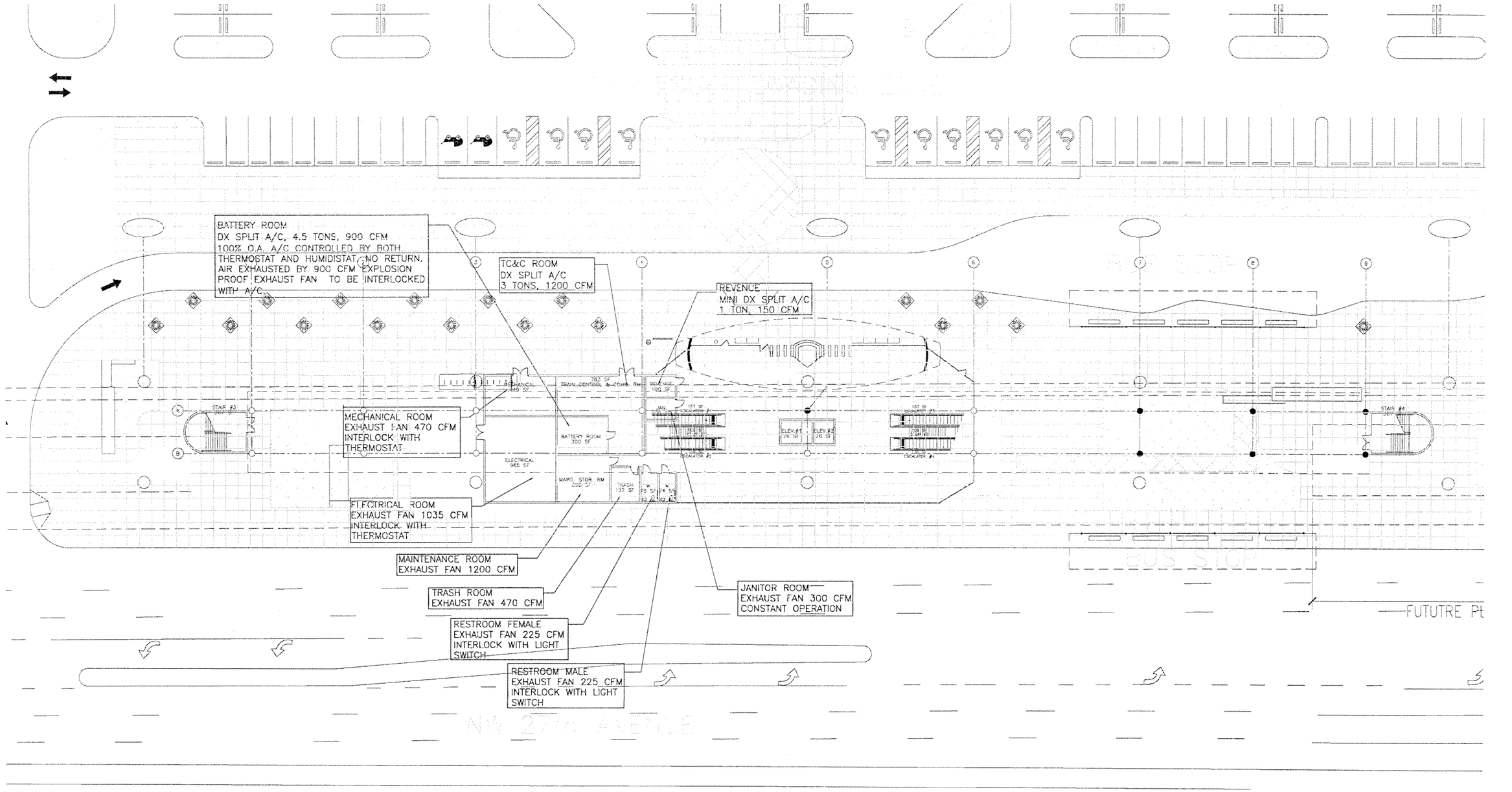

0 10 20 40

SUBJECT TO CHANGE

Designed by A.H.	Date					
Drawn by A.H.	Date					
Checked by G.V.	Date					
Approved by G.V.	Date	No.	Date	By / Chk	App.	Revisions

NORTH CORRIDOR METRORAIL EXTENSION - PRELIMINARY ENGINEERING (100% SUBMITTAL)

MIAMI-DADE COUNTY

MIAMI-DADE TRANSIT

PARSONS
7600 CORPORATE CENTER DRIVE, SUITE 500
MIAMI, FLORIDA 33126
PHONE: (786) 464-1000 FAX: (786) 845-7119
CERTIFICATE OF AUTHORIZATION NO. 1838

Approved | Date

H.J. ROSS
201 ALHAMBRA CIRCLE SUITE 900
CORAL GABLES, FLORIDA 33134
PHONE: (305) 567-1888 / FAX: (305) 567-1771
407

Approved | Date 05-05-06

MECHANICAL

NW 183RD ST. STATION MECHANICAL PLAZA LEVEL PLAN

Scale 1" = 40' | Drawing ME-20 | Sheet 232

$DATE$ $TIME$ $FILE$

G:\550515 No...\Corridor\NW 183 ST\Mech\Hvac\SHTME-20.dwg, 5/12/2006 3:24:16 PM, blindhc

G:\550515 N. . Corridor\NW 183 ST\Mech\Hvac\SHTME-21.dwg, 5/12/2006 3:24:20 PM, blindh

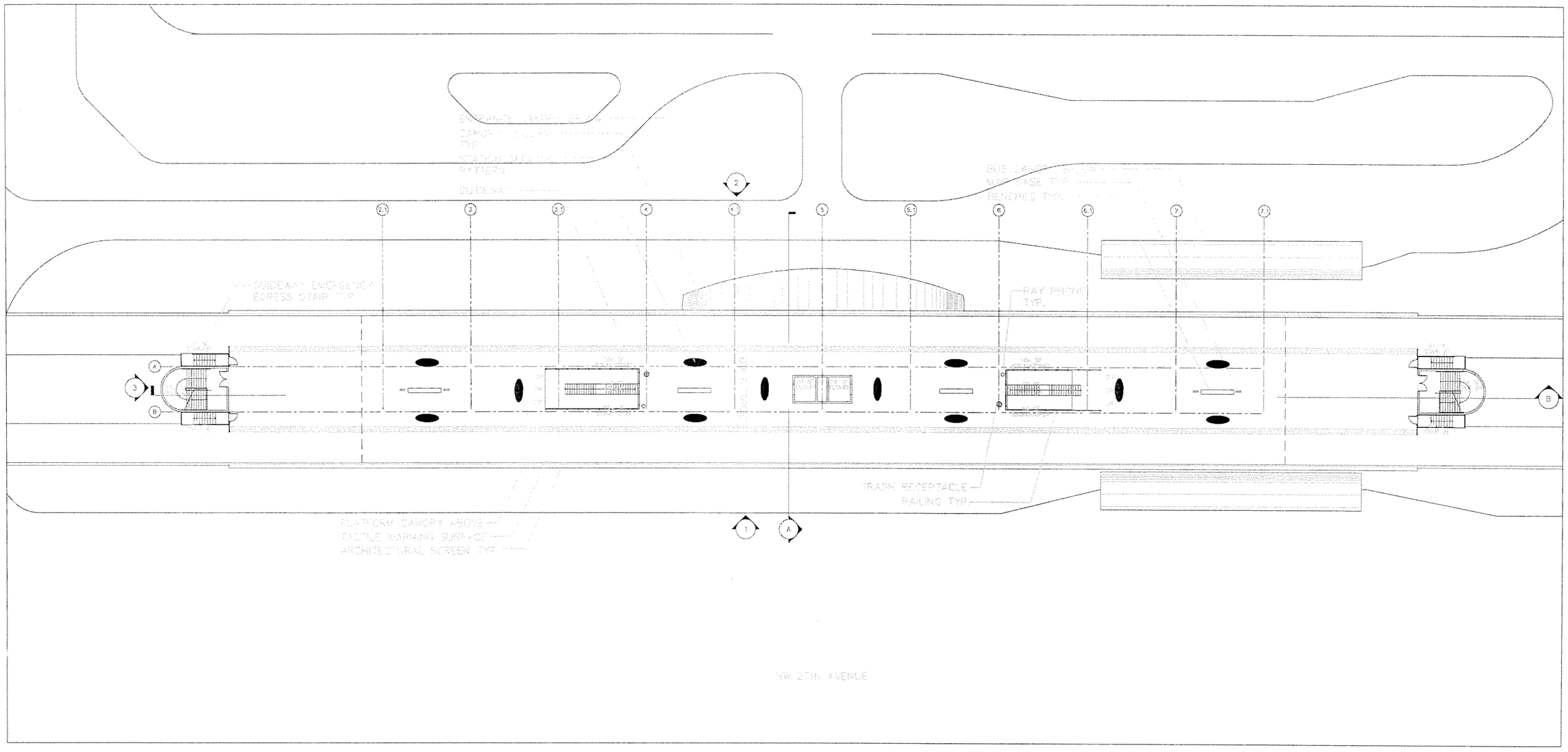

NO MECHANICAL WORK DONE ON THIS SHEET FOR THIS SUBMITTAL.

0 10 20 40

SUBJECT TO CHANGE

Designed by A.H. Date						NORTH CORRIDOR METRORAIL EXTENSION - PRELIMINARY ENGINEERING (100% SUBMITTAL)	MECHANICAL
Drawn by A.H. Date							
Checked by G.V. Date							
Approved by G.V. Date	No.	Date	By / Chk	App.	Revisions	MIAMI-DADE COUNTY / MIAMI-DADE TRANSIT	NW 183RD ST. STATION MECHANICAL PLATFORM LEVEL PLAN

PARSONS
7600 CORPORATE CENTER DRIVE, SUITE 500
MIAMI, FLORIDA 33126
PHONE: (786) 464-1000 FAX: (786) 845-7119
CERTIFICATE OF AUTHORIZATION NO. 1838

H.J. ROSS
201 ALHAMBRA CIRCLE SUITE 900
CORAL GABLES, FLORIDA 33134
PHONE: (305) 567-1888 / FAX: (305) 567-1771
407

Approved	Date	Approved	Date	Scale	Drawing	Sheet
			05-05-06	1"=40'	ME-21	233
$DATE$		$DATE$	$TIME$			

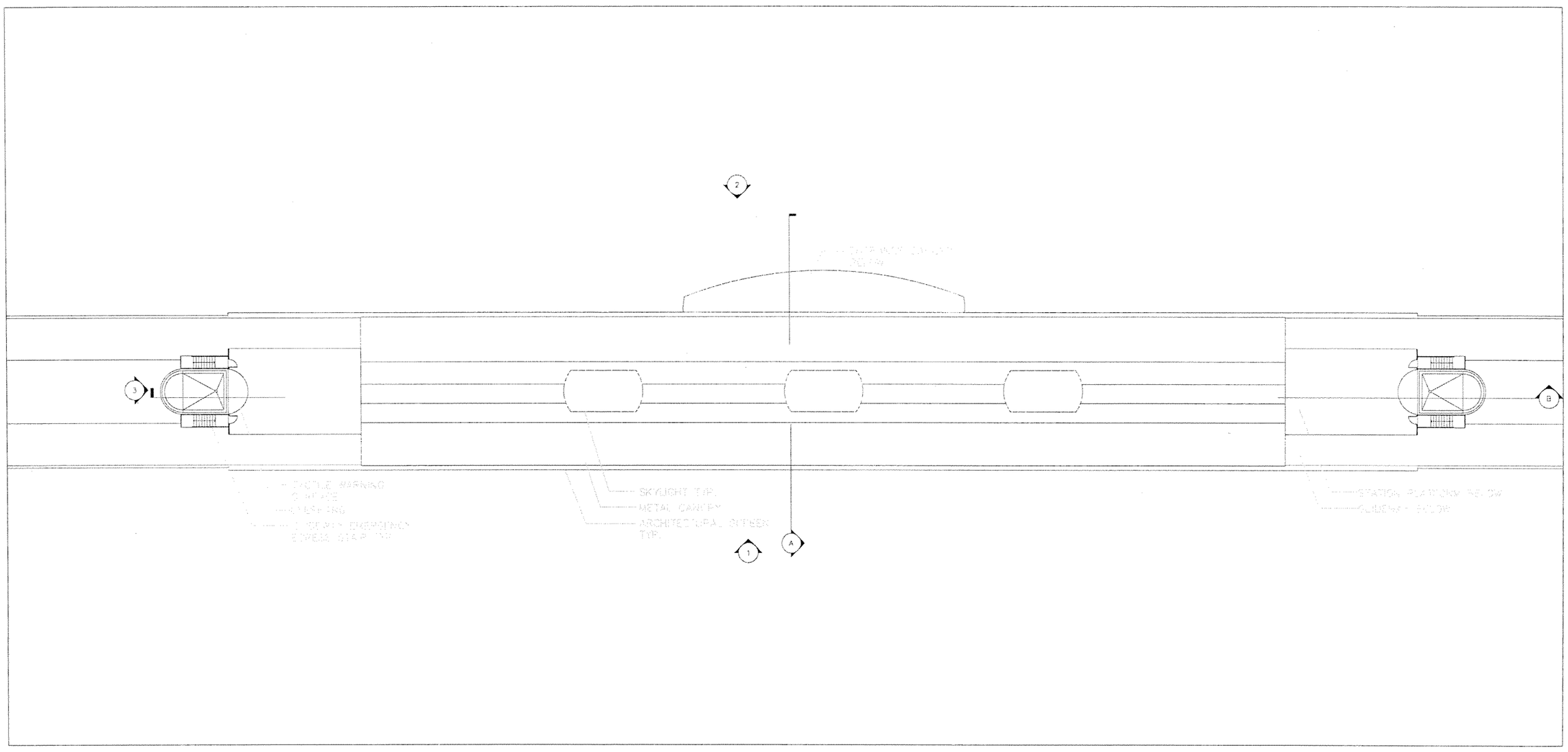

NO MECHANICAL WORK DONE ON THIS SHEET FOR THIS SUBMITTAL.

0 10 20 40

SUBJECT TO CHANGE

Designed by A.H. Date						NORTH CORRIDOR METRORAIL EXTENSION - PRELIMINARY ENGINEERING (100% SUBMITTAL)	MECHANICAL
Drawn by A.H. Date						MIAMI-DADE COUNTY / MIAMI-DADE TRANSIT	NW 183RD ST. STATION MECHANICAL ROOF PLAN
Checked by G.V. Date						PARSONS 7600 CORPORATE CENTER DRIVE, SUITE 500 MIAMI, FLORIDA 33126 PHONE: (786) 464-1000 FAX: (786) 845-7119 CERTIFICATE OF AUTHORIZATION NO. 1838	H.J. ROSS 201 ALHAMBRA CIRCLE SUITE 900 CORAL GABLES, FLORIDA 33134 PHONE: (305) 567-1888 / FAX: (305) 567-1771 407
Approved by G.V. Date	No.	Date	By / Chk	App.	Revisions	Approved / Date	Approved / Date 05-05-06
						$DATE$ $TIME$ $TYLE$	Scale 1"=40' Drawing ME-22 Sheet 234

G:\550515 N... Corridor\NW 183 ST\Mech\Hvac\SHT\ME-22.dwg, 5/12/2006 3:24:25 PM, blindh...

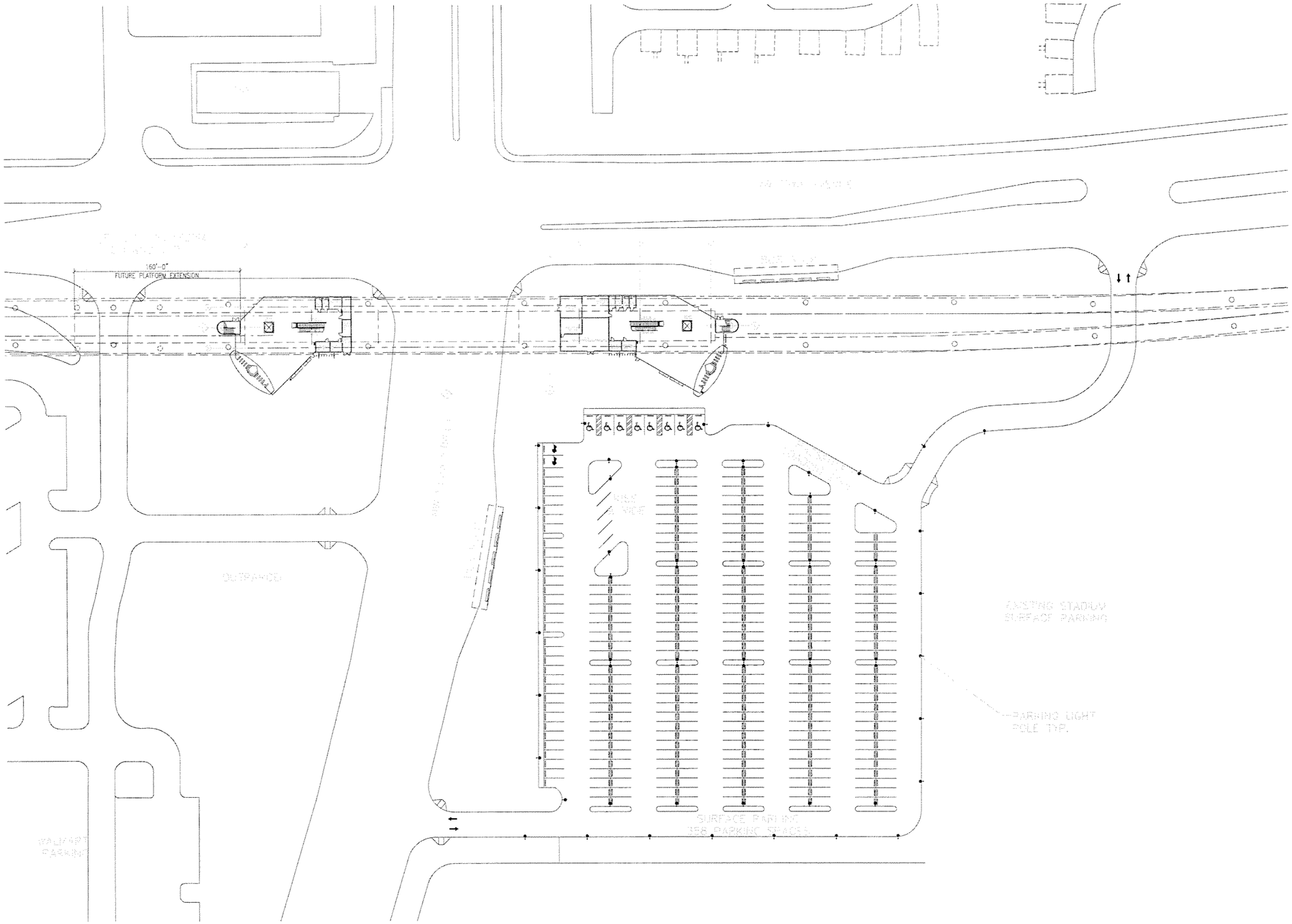

NO MECHANICAL WORK DONE ON THIS SHEET FOR THIS SUBMITTAL.

0 25 50 100

SUBJECT TO CHANGE

G:\550515 No... Corridor\NW 199 ST\Mech\Hvac\SHTME-23.dwg, 5/12/2006 3:29:20 PM, blindhc

Designed by A.H. Date							
Drawn by A.H. Date							
Checked by G.V. Date							
Approved by G.V. Date	No.	Date	by / Chk	App.	Revisions		

NORTH CORRIDOR METRORAIL EXTENSION - PRELIMINARY ENGINEERING (100% SUBMITTAL)

MECHANICAL

MIAMI-DADE COUNTY

MIAMI-DADE TRANSIT

PARSONS
7600 CORPORATE CENTER DRIVE, SUITE 500
MIAMI, FLORIDA 33126
PHONE: (786) 464-1000 FAX: (786) 845-7119
CERTIFICATE OF AUTHORIZATION NO. 1838

H.J. ROSS
201 ALHAMBRA CIRCLE SUITE 900
CORAL GABLES, FLORIDA 33134
PHONE: (305) 567-1888 / FAX: (305) 567-1771
407

Approved	Date	Approved	Date	Scale	Drawing	Sheet
			05-05-06	1" = 100'	ME-23	235
$DATE$			$TIME$	$FILE$		

NW 199TH ST. STATION MECHANICAL SITE PLAN

)'-0"
ORM EXTENSION

RESTROOM FEMALE
EXHAUST FAN 200 CFM
INTERLOCK WITH LIGHT
SWITCH

RESTROOM MALE
EXHAUST FAN 200 CFM
INTERLOCK WITH LIGHT
SWITCH

JANITOR ROOM
EXHAUST FAN 200 CFM
CONSTANT OPERATION

MECHANICAL ROOM
EXHAUST FAN 300 CFM
INTERLOCK WITH
THERMOSTAT

MAINTENANCE ROOM
EXHAUST FAN 200 CFM

ELECTRICAL ROOM
EXHAUST FAN 430 CFM
INTERLOCK WITH
THERMOSTAT

BATTERY ROOM
DX SPLIT A/C, 4.5 TONS, 900 CFM
100% O.A. A/C CONTROLLED BY BOTH
THERMOSTAT AND HUMIDISTAT. NO RETURN.
AIR EXHAUSTED BY 900 CFM EXPLOSION
PROOF EXHAUST FAN TO BE INTERLOCKED
WITH A/C.

TRASH ROOM
EXHAUST FAN 320 CFM

REVENUE
MINI DX SPLIT A/C
1 TON, 190 CFM

JANITOR ROOM
EXHAUST FAN 200 CFM
CONSTANT OPERATION

ELECTRICAL ROOM
EXHAUST FAN 560 CFM
INTERLOCK WITH
THERMOSTAT

MECHANICAL ROOM
EXHAUST FAN 470 CFM
INTERLOCK WITH
THERMOSTAT

MAINTENANCE ROOM
EXHAUST FAN 200 CFM

RESTROOM MALE
EXHAUST FAN 200 CFM
INTERLOCK WITH LIGHT
SWITCH

RESTROOM FEMALE
EXHAUST FAN 200 CFM
INTERLOCK WITH LIGHT
SWITCH

TC&C ROOM
DX SPLIT A/C
5 TONS, 2000 CFM

TRASH ROOM
EXHAUST FAN 320 CFM

REVENUE
MINI DX SPLIT A/C
1 TON, 190 CFM

NW 10th STREET

KISS

0 10 20 40

SUBJECT TO CHANGE

Designed by A.H. Date							
Drawn by A.H. Date							
Checked by G.V. Date							
Approved by G.V. Date	No.	Date	By Chk	App.	Revisions		

NORTH CORRIDOR METRORAIL EXTENSION - PREliminary ENGINEERING (100% SUBMITTAL)

MIAMI-DADE COUNTY

MIAMI-DADE TRANSIT

PARSONS
7600 CORPORATE CENTER DRIVE, SUITE 500
MIAMI, FLORIDA 33126
PHONE: (786) 464-1000 FAX: (786) 845-7119
CERTIFICATE OF AUTHORIZATION NO. 1838

H.J. ROSS
201 ALHAMBRA CIRCLE SUITE 900
CORAL GABLES, FLORIDA 33134
PHONE: (305) 567-1888 / FAX: (305) 567-1771
407

Approved	Date	Approved	Date
			05-05-06

$DATE$ $TIME$ $FILE$

MECHANICAL

NW 199TH ST. STATION MECHANICAL PLAZA LEVEL PLAN

Scale 1" = 40' Drawing ME-24 Sheet 236

G:\550515 NC...Corridor\NW 199 ST\Mech\Hvac\SHT\ME-24.dwg, 5/12/2006 3:29:30 PM, blindhc

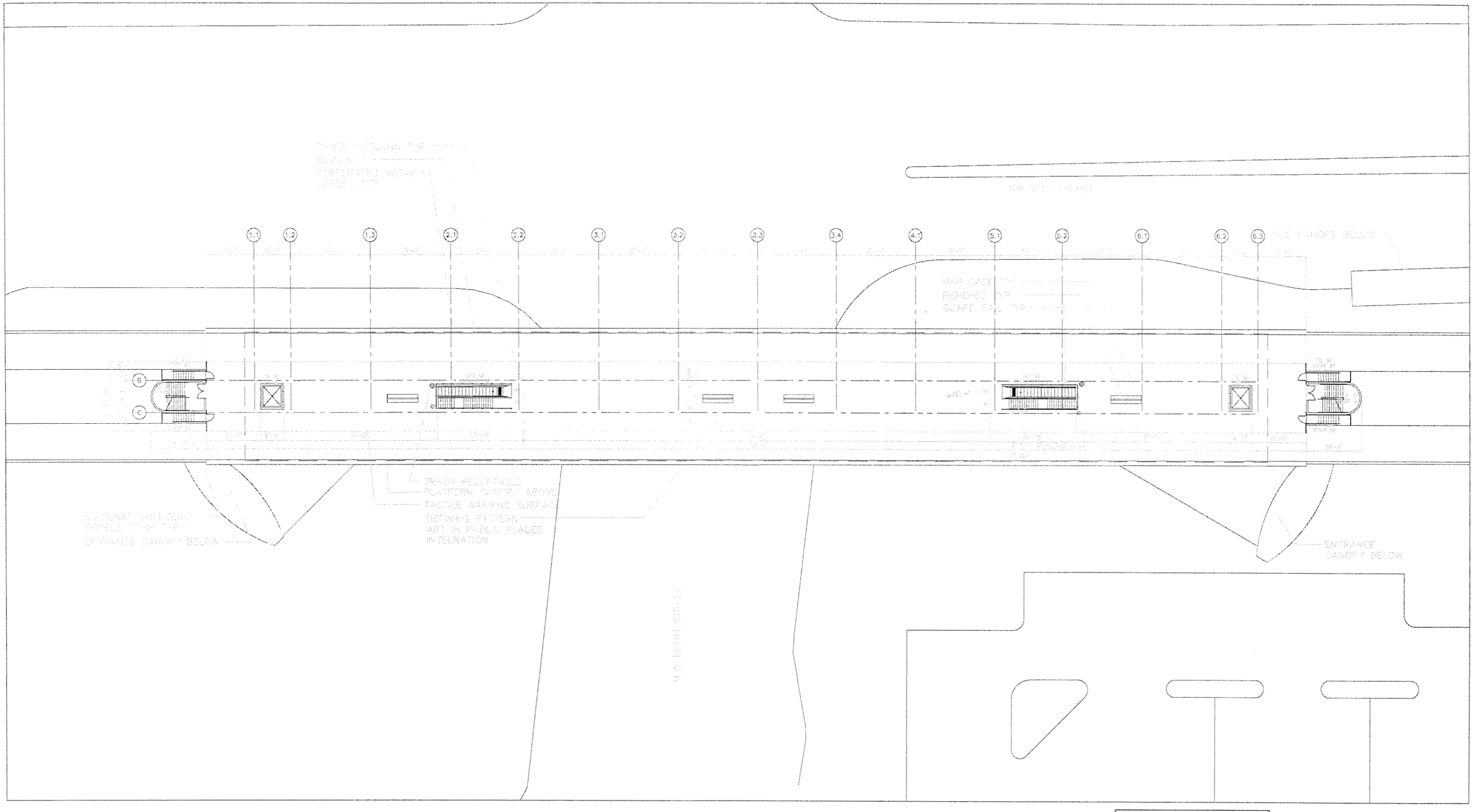

NO MECHANICAL WORK DONE ON THIS SHEET FOR THIS SUBMITTAL.

0 10 20 40

SUBJECT TO CHANGE

Designed by A.H.	Date					
Drawn by A.H.	Date					
Checked by G.V.	Date					
Approved by G.V.	Date	No.	Date	By / Chk	App.	Revisions

NORTH CORRIDOR METRORAIL EXTENSION - PRELIMINARY ENGINEERING (100% SUBMITTAL)

MIAMI-DADE COUNTY

MIAMI-DADE TRANSIT

PARSONS
7600 CORPORATE CENTER DRIVE, SUITE 500
MIAMI, FLORIDA 33126
PHONE: (786) 464-1000 FAX: (786) 845-7119
CERTIFICATE OF AUTHORIZATION NO. 1838

Approved | Date

H.J. ROSS
201 ALHAMBRA CIRCLE SUITE 900
CORAL GABLES, FLORIDA 33134
PHONE: (305) 567-1888 / FAX: (305) 567-1771
407

Approved | Date 05-05-06

$DATE$ $STAFF$ $TITLE$

MECHANICAL

NW 199TH ST. STATION MECHANICAL PLAFORM LEVEL PLAN

Scale 1" = 40' | Drawing ME-25 | Sheet 237

G:\550515 N... CorridorNW 199 ST\Mech\Hvac\SHTME-25.dwg, 5/12/2006 3:29:38 PM, blindh

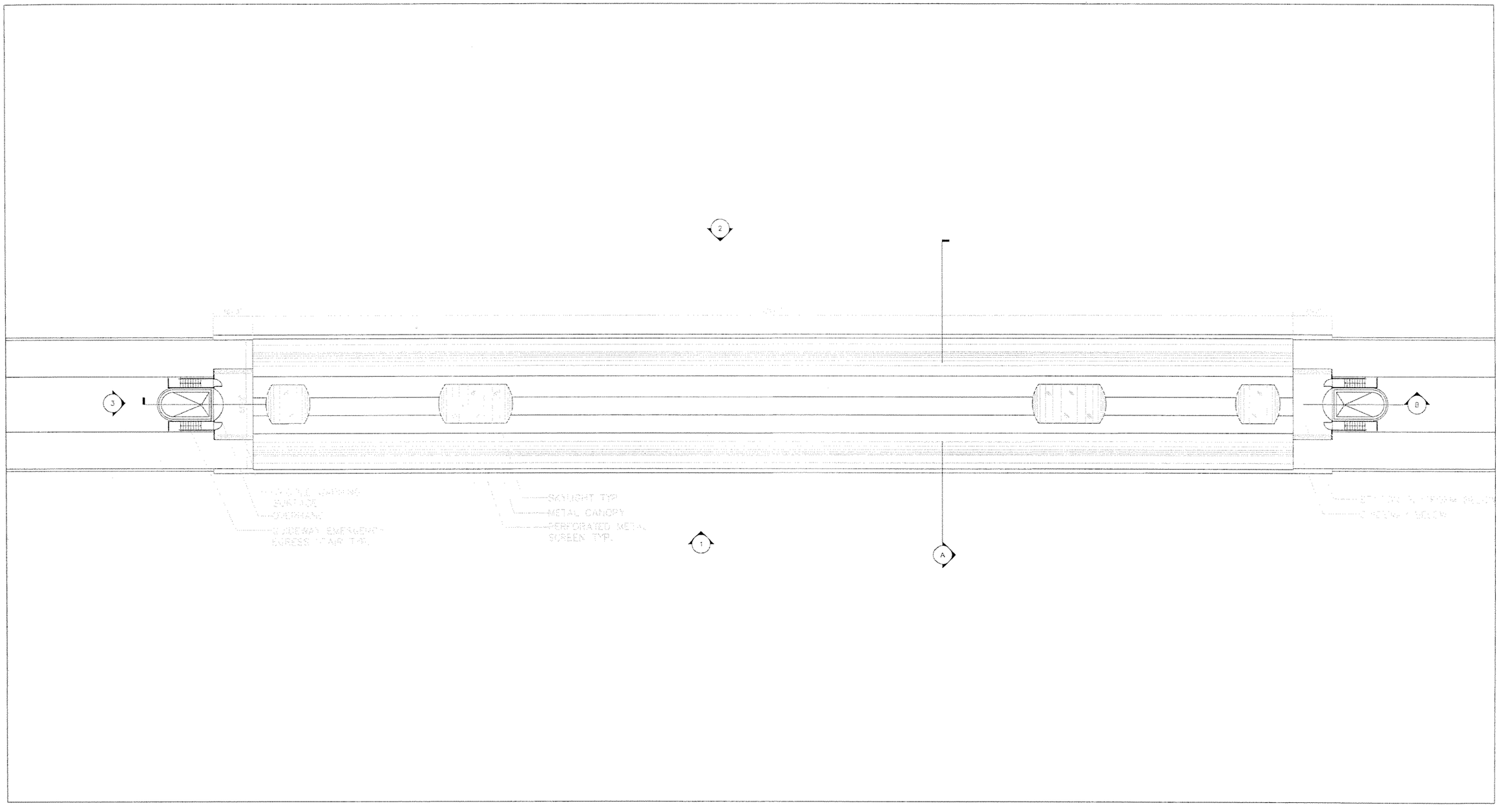

NO MECHANICAL WORK DONE ON THIS SHEET FOR THIS SUBMITTAL.

0 10 20 40

SUBJECT TO CHANGE

Designed by A.H. Date						
Drawn by A.H. Date						
Checked by G.V. Date						
Approved by G.V. Date	No.	Date	By / Chk	App.	Revisions	

NORTH CORRIDOR METRORAIL EXTENSION - PRELIMINARY ENGINEERING (100% SUBMITTAL)

MIAMI-DADE COUNTY

MIAMI-DADE TRANSIT

PARSONS
7600 CORPORATE CENTER DRIVE, SUITE 500
MIAMI, FLORIDA 33126
PHONE: (786) 464-1000 FAX: (786) 845-7119
CERTIFICATE OF AUTHORIZATION NO. 1838

H.J. ROSS
201 ALHAMBRA CIRCLE SUITE 900
CORAL GABLES, FLORIDA 33134
PHONE: (305) 567-1888 / FAX: (305) 567-1771
407

Approved	Date	Approved	Date 05-05-06
$DATE$		$DATE$	$DATE$

MECHANICAL

NW 199TH ST. STATION MECHANICAL ROOF PLAN

Scale 1" = 40' | Drawing ME-26 | Sheet 238

G:\550515 NC CorridorNW 199 ST\Mech\Hvac\SHTME-26.dwg, 5/12/2006 3:29:43 PM, blindh

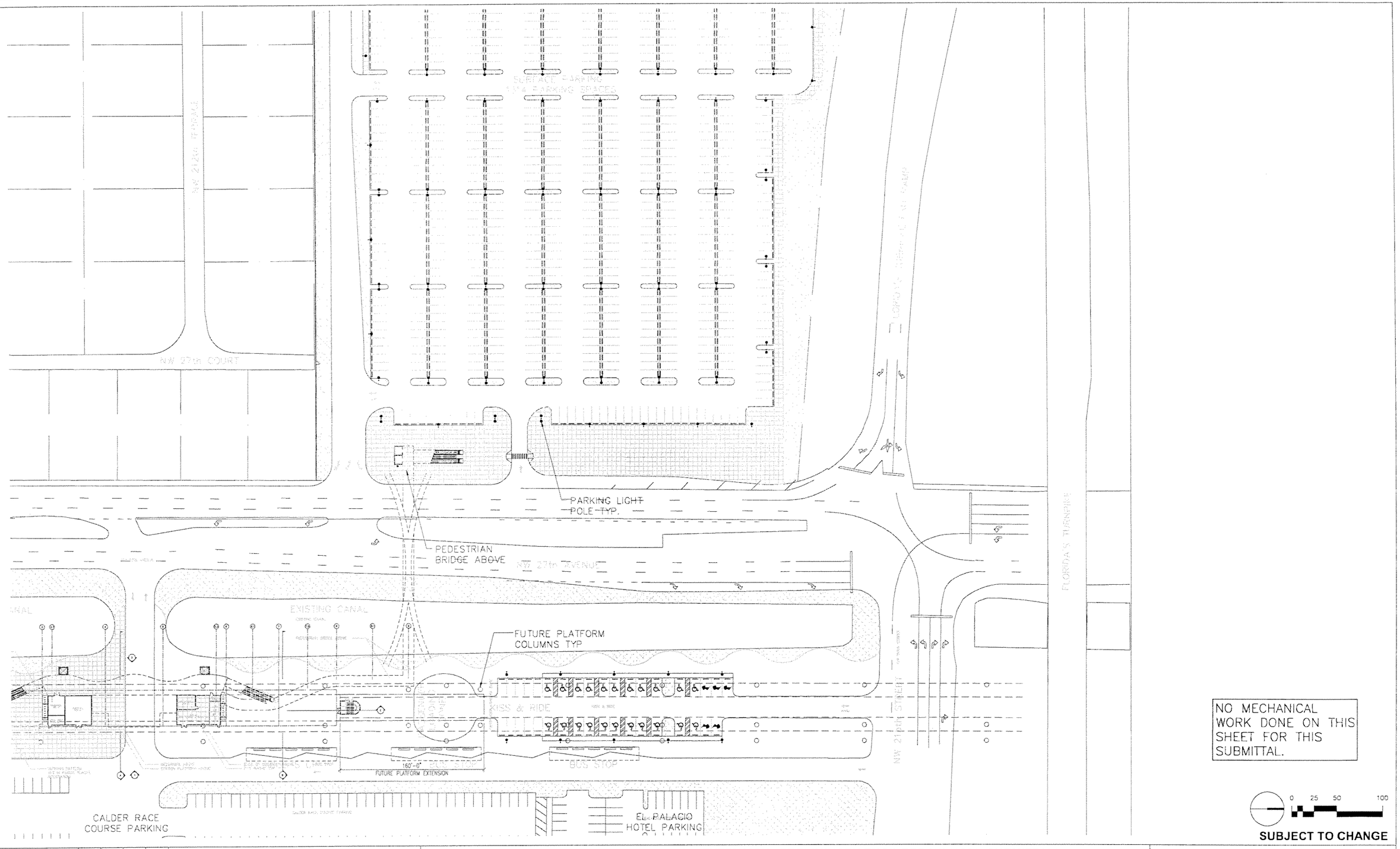

NO MECHANICAL WORK DONE ON THIS SHEET FOR THIS SUBMITTAL.

0 25 50 100

SUBJECT TO CHANGE

Designed by A.H. Date						
Drawn by A.H. Date						
Checked by G.V. Date						
Approved by G.V. Date	No.	Date	By / Chk	App.	Revisions	

NORTH CORRIDOR METRORAIL EXTENSION - PRELIMINARY ENGINEERING (100% SUBMITTAL)

MIAMI-DADE COUNTY

MIAMI-DADE TRANSIT

PARSONS
7600 CORPORATE CENTER DRIVE, SUITE 500
MIAMI, FLORIDA 33126
PHONE: (786) 464-1000 FAX: (786) 845-7119
CERTIFICATE OF AUTHORIZATION NO. 1838

H.J. ROSS
201 ALHAMBRA CIRCLE SUITE 900
CORAL GABLES, FLORIDA 33134
PHONE: (305) 567-1868 / FAX: (305) 567-1771
407

Approved	Date	Approved	Date
			05-05-06

MECHANICAL

NW 215TH ST. STATION MECHANICAL SITE PLAN

Scale	Drawing	Sheet
1" = 100'	ME-27	239

G:\550515 No...orridor\NW 215 ST\Mech\Hvac\SHTME-27.dwg, 5/12/2006 3:43:32 PM, blindhol

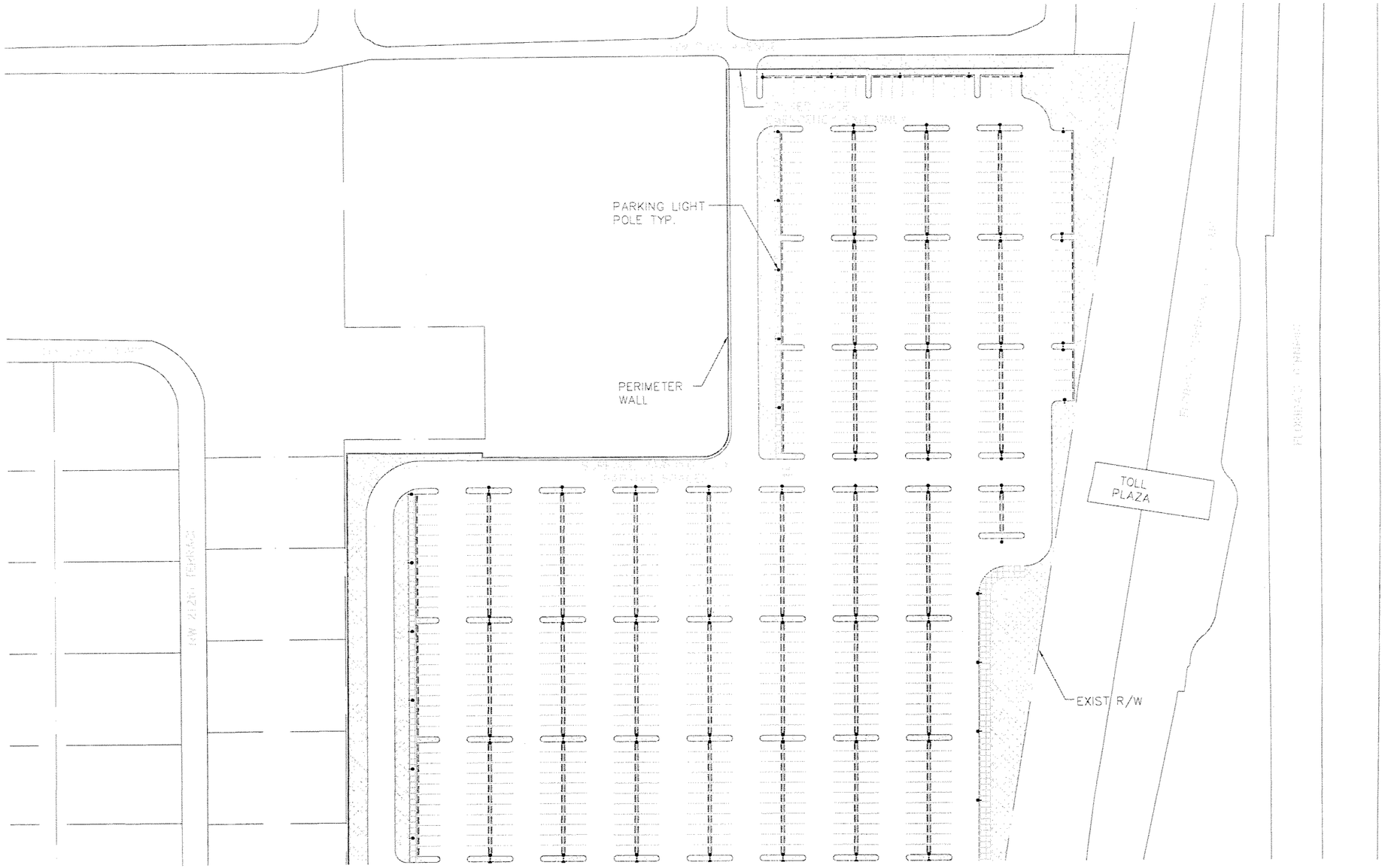

NO MECHANICAL WORK DONE ON THIS SHEET FOR THIS SUBMITTAL.

0 25 50 100

SUBJECT TO CHANGE

Designed by A.H. Date						
Drawn by A.H. Date						
Checked by G.V. Date						
Approved by G.V. Date	No.	Date	By / Chk	App.	Revisions	

NORTH CORRIDOR METRORAIL EXTENSION - PRELIMINARY ENGINEERING (100% SUBMITTAL)

MIAMI-DADE COUNTY

MIAMI-DADE TRANSIT

PARSONS
7600 CORPORATE CENTER DRIVE, SUITE 500
MIAMI, FLORIDA 33126
PHONE: (786) 464-1000 FAX: (786) 845-7119
CERTIFICATE OF AUTHORIZATION NO. 1838

H.J. ROSS
201 ALHAMBRA CIRCLE SUITE 900
CORAL GABLES, FLORIDA 33134
PHONE: (305) 567-1888 / FAX: (305) 567-1771
407

Approved | Date | Approved | Date 05-05-06

MECHANICAL

NW 215TH ST. STATION
MECHANICAL
SITE PLAN-cont'd

Scale 1" = 100' | Drawing ME-28 | Sheet 240

G:\550515 North Corridor\NW 215 ST\Mech\Hvac\SHT\ME-28.dwg, 5/12/2006 3:43:43 PM, blindholm

G:\550515 No. ,orridor\NW 215 ST\Mech\Hvac\SHT\ME-29.dwg, 5/12/2006 3:43:52 PM, blindhoi

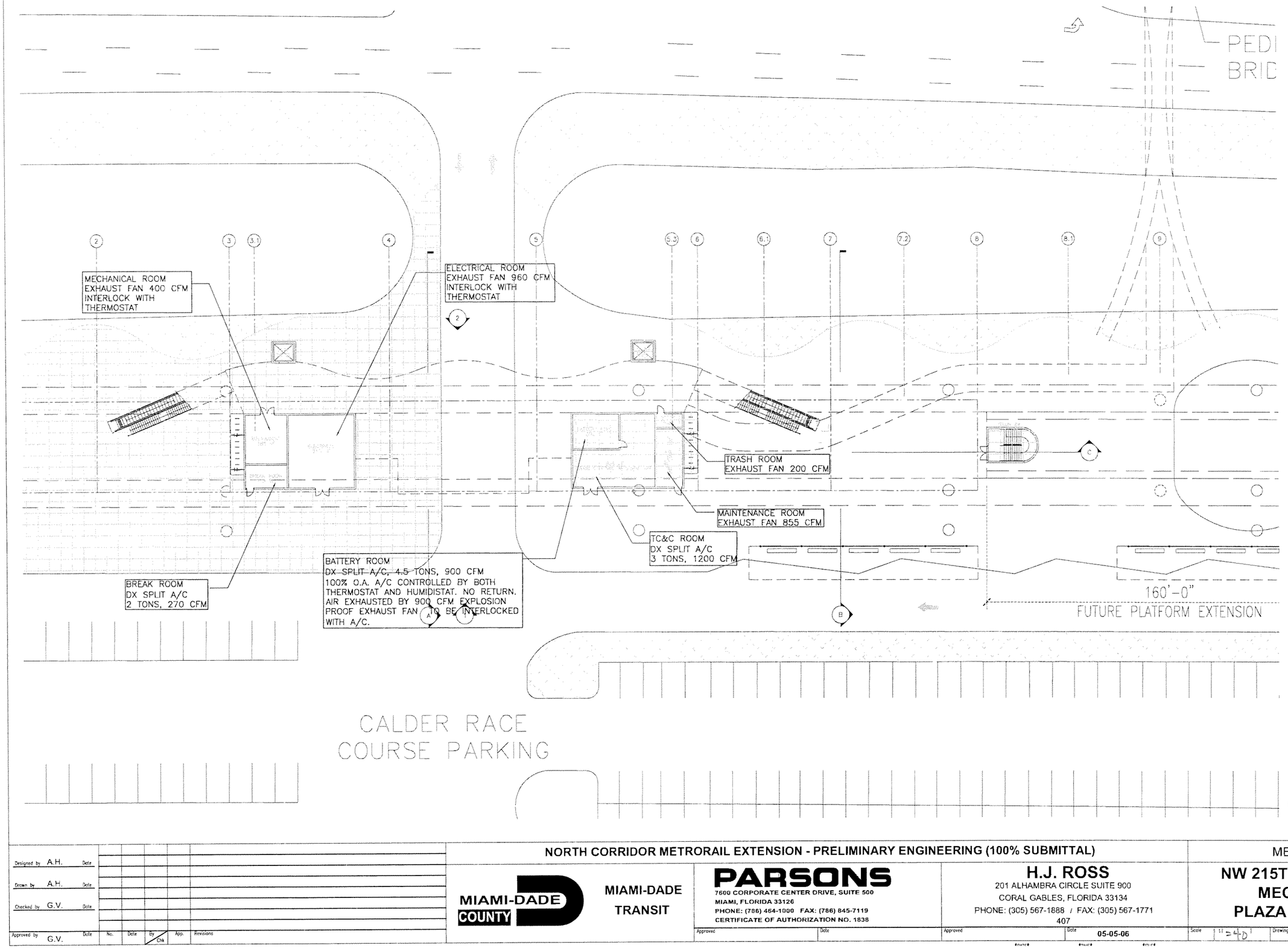

Designed by A.H. Date					
Drawn by A.H. Date					
Checked by G.V. Date					
Approved by G.V. Date	No.	Date	By / Chk	App.	Revisions

NORTH CORRIDOR METRORAIL EXTENSION - PRELIMINARY ENGINEERING (100% SUBMITTAL)

MECHANICAL

MIAMI-DADE COUNTY

MIAMI-DADE TRANSIT

PARSONS
7600 CORPORATE CENTER DRIVE, SUITE 500
MIAMI, FLORIDA 33126
PHONE: (786) 464-1000 FAX: (786) 845-7119
CERTIFICATE OF AUTHORIZATION NO. 1838

Approved | Date

H.J. ROSS
201 ALHAMBRA CIRCLE SUITE 900
CORAL GABLES, FLORIDA 33134
PHONE: (305) 567-1888 / FAX: (305) 567-1771
407

Approved | Date 05-05-06

NW 215TH ST. STATION MECHANICAL PLAZA LEVEL PLAN

Scale 1" = 40' | Drawing ME-29 | Sheet 241

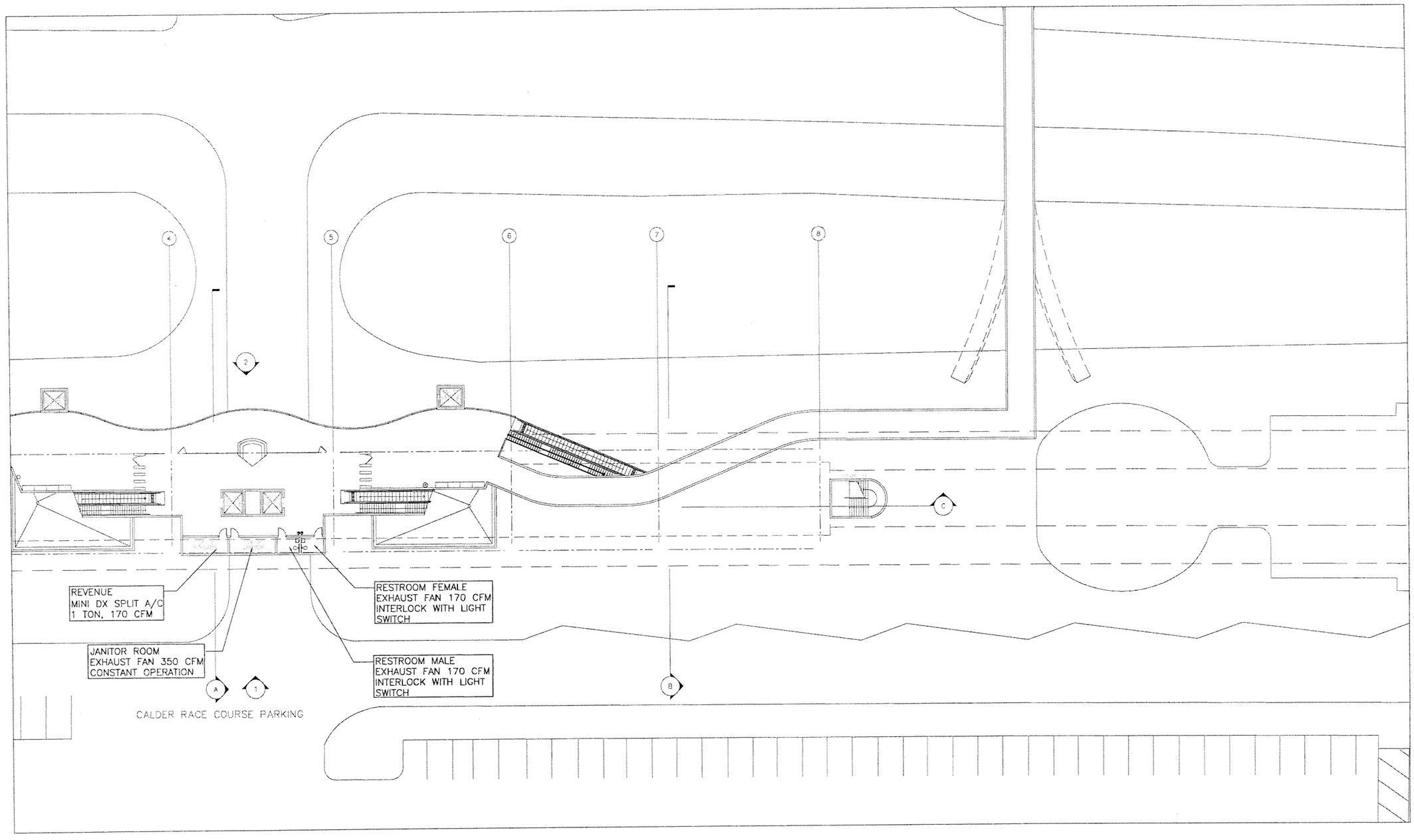

0 10 20 40

SUBJECT TO CHANGE

G:\550515 Nor...rridor\NW 215 ST\Mech\Hvac\SHT\ME-30.dwg, 5/12/2006 3:44:01 PM, blindholr

Designed by A.H. Date						
Drawn by A.H. Date						
Checked by G.V. Date						
Approved by G.V. Date	No.	Date	By / Chk	App.	Revisions	

NORTH CORRIDOR METRORAIL EXTENSION - PRELIMINARY ENGINEERING (100% SUBMITTAL)

MECHANICAL

MIAMI-DADE COUNTY

MIAMI-DADE TRANSIT

PARSONS
7600 CORPORATE CENTER DRIVE, SUITE 500
MIAMI, FLORIDA 33126
PHONE: (786) 464-1000 FAX: (786) 845-7119
CERTIFICATE OF AUTHORIZATION NO. 1838

Approved | Date

H.J. ROSS
201 ALHAMBRA CIRCLE SUITE 900
CORAL GABLES, FLORIDA 33134
PHONE: (305) 567-1888 / FAX: (305) 567-1771
407

Approved | Date 05-05-06

STATE | STATE | STATE

NW 215TH ST. STATION MECHANICAL MEZZANINE FLOOR PLAN

Scale 1"=40' | Drawing ME-30 | Sheet 242

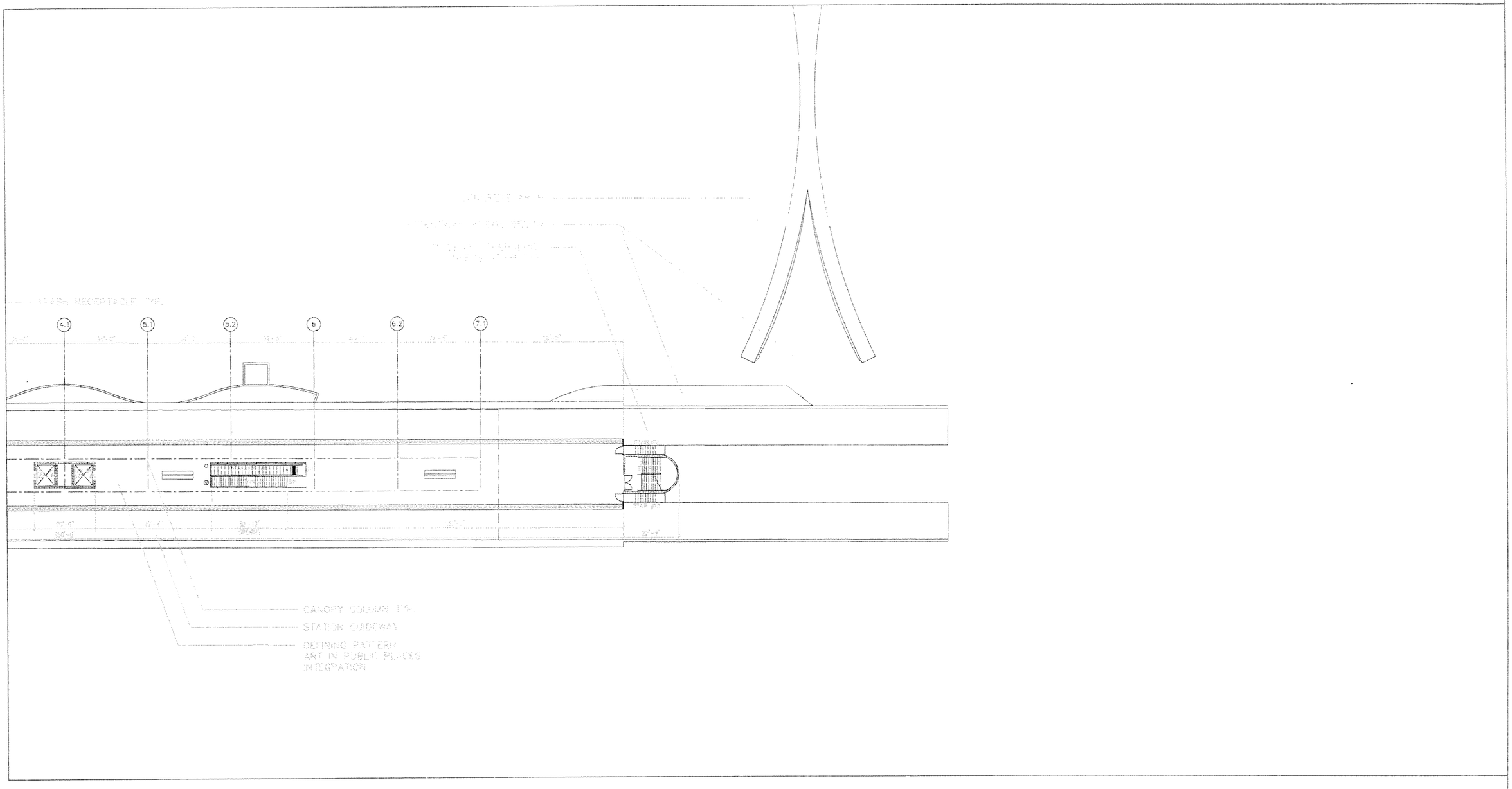

NO MECHANICAL WORK DONE ON THIS SHEET FOR THIS SUBMITTAL.

0 10 20 40

SUBJECT TO CHANGE

Designed by A.H. Date						
Drawn by A.H. Date						
Checked by G.V. Date						
Approved by G.V. Date	No.	Date	By / Chk	App.	Revisions	

NORTH CORRIDOR METRORAIL EXTENSION - PRELIMINARY ENGINEERING (100% SUBMITTAL)

MIAMI-DADE COUNTY

MIAMI-DADE TRANSIT

PARSONS
7600 CORPORATE CENTER DRIVE, SUITE 500
MIAMI, FLORIDA 33126
PHONE: (786) 464-1000 FAX: (786) 845-7119
CERTIFICATE OF AUTHORIZATION NO. 1838

H.J. ROSS
201 ALHAMBRA CIRCLE SUITE 900
CORAL GABLES, FLORIDA 33134
PHONE: (305) 567-1888 / FAX: (305) 567-1771
407

Approved	Date	Approved	Date
			05-05-06

MECHANICAL

NW 215TH ST. STATION MECHANICAL PLATFORM PLAN

Scale	Drawing	Sheet
1" = 40'	ME-31	243

G:\550515 No...\orridor\NW 215 ST\Mech\Hvac\SHT\ME-31.dwg, 5/12/2006 3:44:06 PM, blindho

G:\550515 Nor... ...orridor\NW 215 ST\Mech\Hvac\SHTME-32.dwg, 5/12/2006 3:44:11 PM, blindholt

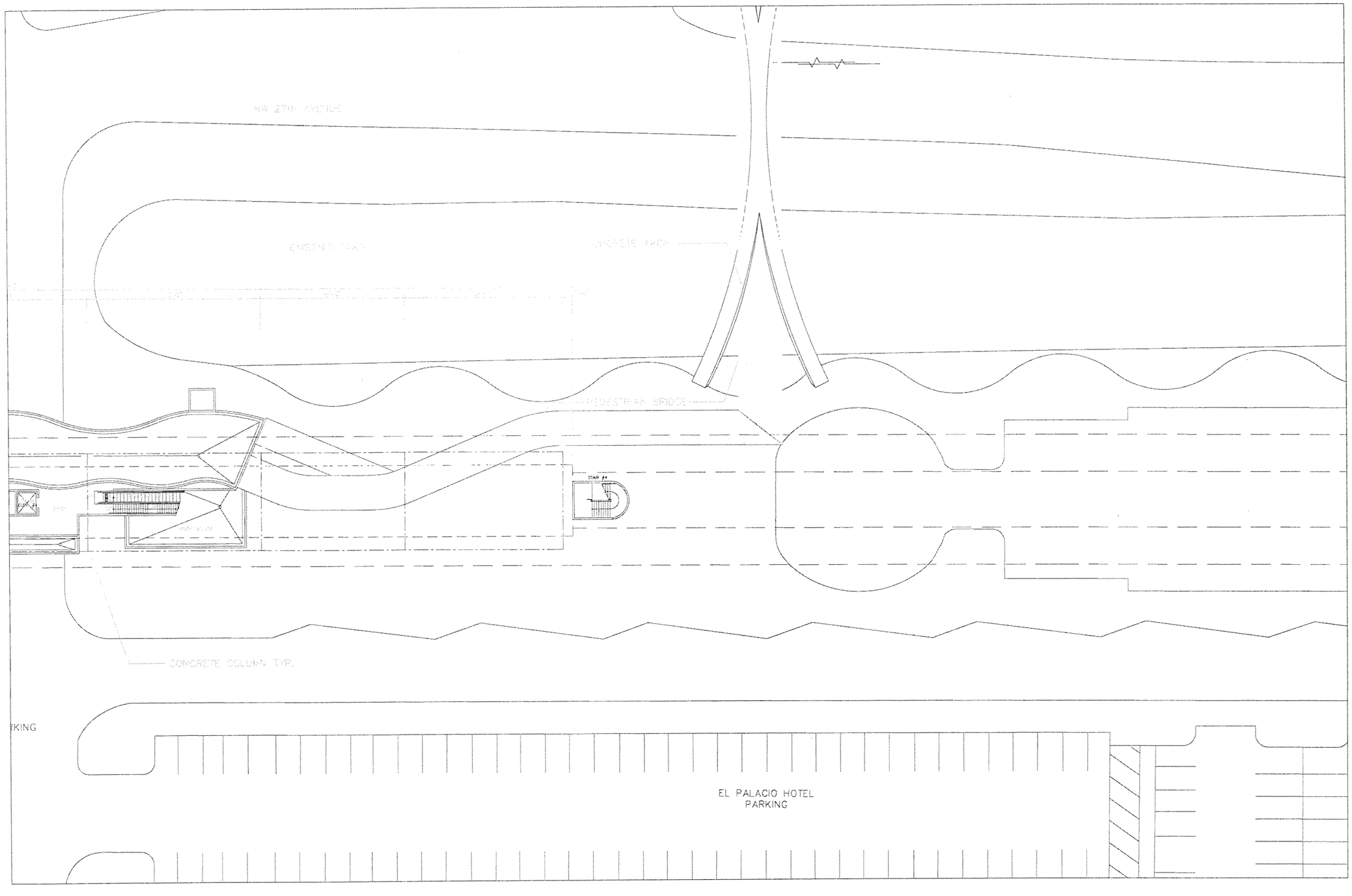

NO MECHANICAL WORK DONE ON THIS SHEET FOR THIS SUBMITTAL.

0 10 20 40

SUBJECT TO CHANGE

Designed by A.H. Date							
Drawn by A.H. Date							
Checked by G.V. Date							
Approved by G.V. Date	No.	Date	By / Chk.	App.	Revisions		

NORTH CORRIDOR METRORAIL EXTENSION - PRELIMINARY ENGINEERING (100% SUBMITTAL)

MIAMI-DADE COUNTY

MIAMI-DADE TRANSIT

PARSONS
7600 CORPORATE CENTER DRIVE, SUITE 500
MIAMI, FLORIDA 33126
PHONE: (786) 464-1000 FAX: (786) 845-7119
CERTIFICATE OF AUTHORIZATION NO. 1838

Approved _____ Date _____

H.J. ROSS
201 ALHAMBRA CIRCLE SUITE 900
CORAL GABLES, FLORIDA 33134
PHONE: (305) 567-1888 / FAX: (305) 567-1771
407

Approved _____ Date 05-05-06

MECHANICAL

NW 215TH ST. STATION MECHANICAL MEZZANINE ROOF PLAN

Scale 1" = 40' Drawing ME-32 Sheet 234

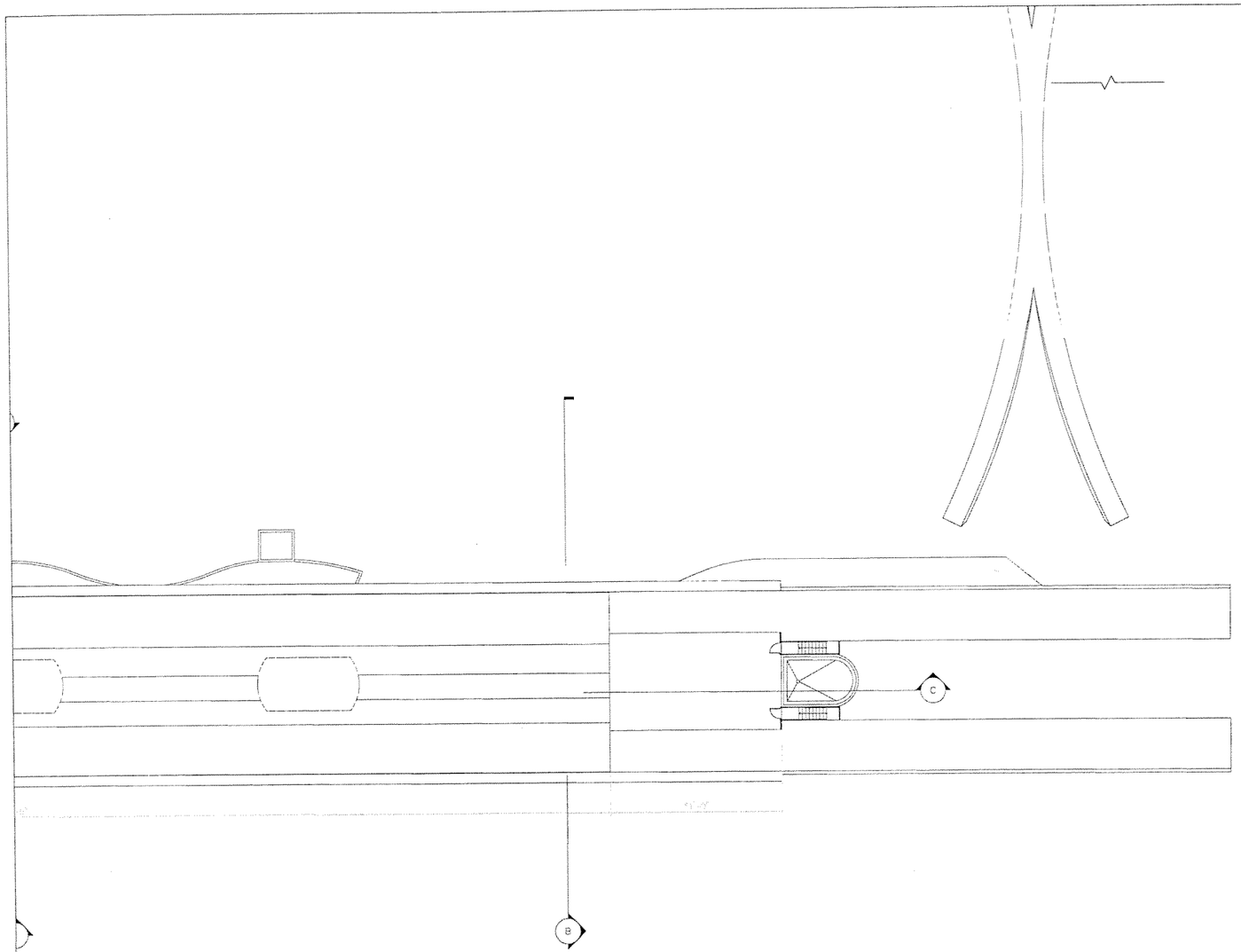

NO MECHANICAL WORK DONE ON THIS SHEET FOR THIS SUBMITTAL.

0 10 20 40

SUBJECT TO CHANGE

NORTH CORRIDOR METRORAIL EXTENSION - PRELIMINARY ENGINEERING (100% SUBMITTAL)

MECHANICAL

Designed by A.H. Date

Drawn by A.H. Date

Checked by G.V. Date

Approved by G.V. Date

No.	Date	By Chk	App.	Revisions

MIAMI-DADE COUNTY

MIAMI-DADE TRANSIT

PARSONS
7600 CORPORATE CENTER DRIVE, SUITE 500
MIAMI, FLORIDA 33126
PHONE: (786) 464-1000 FAX: (786) 845-7119
CERTIFICATE OF AUTHORIZATION NO. 1838

Approved | Date

H.J. ROSS
201 ALHAMBRA CIRCLE SUITE 900
CORAL GABLES, FLORIDA 33134
PHONE: (305) 567-1888 / FAX: (305) 567-1771
407

Approved | Date 05-05-06

NW 215TH ST. STATION MECHANICAL ROOF PLAN

Scale 1"=40' | Drawing ME-33 | Sheet 245

G:\550515 Nort...orridor\NW 215 ST\Mech\Hvac\SHT\ME-33.dwg, 5/12/2006 3:44:15 PM, blindholr

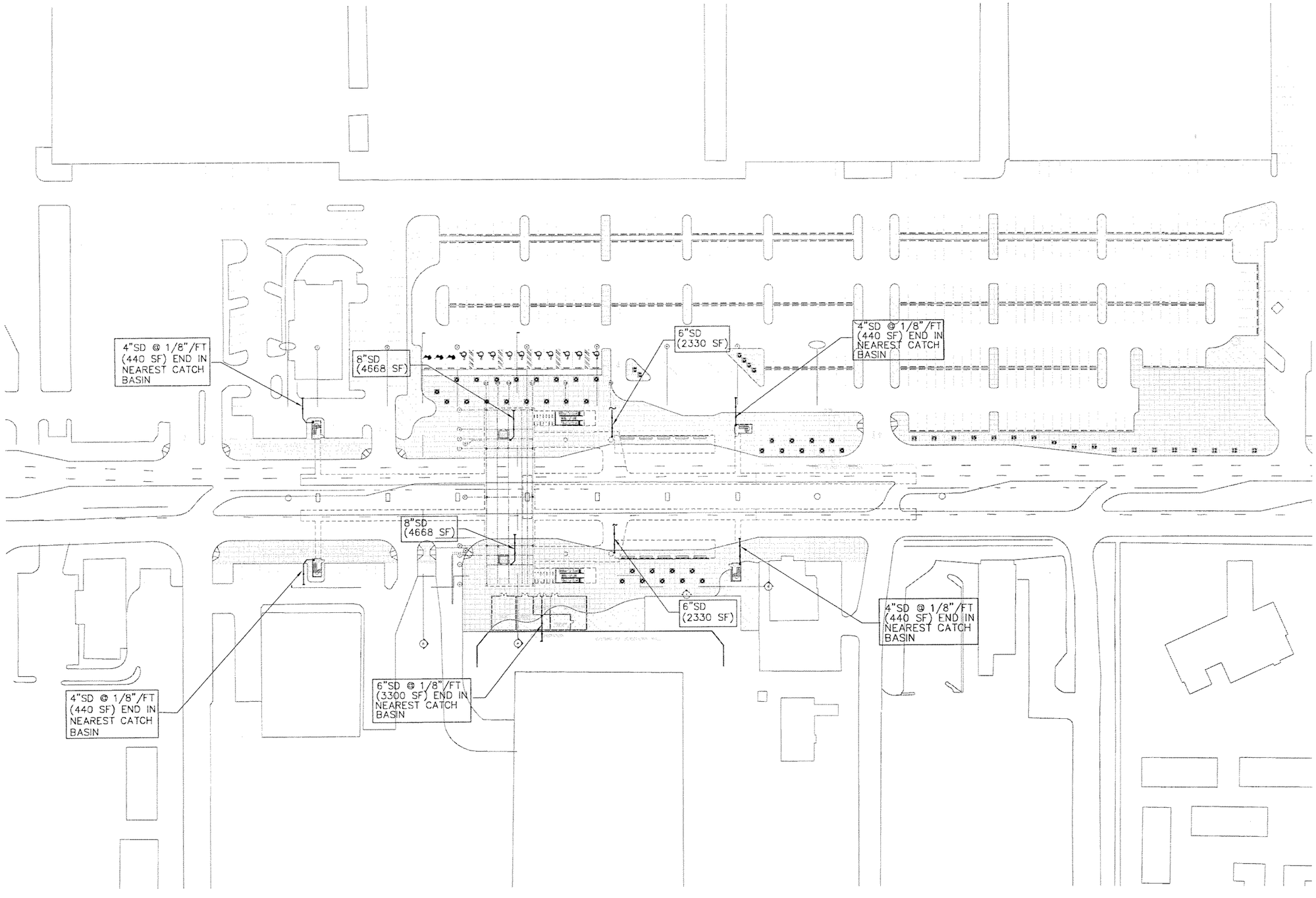

SUBJECT TO CHANGE

Designed by E.B. Date
Drawn by A.M. Date
Checked by E.B. Date
Approved by G.V. Date

No.	Date	By / Chk	App.	Revisions

NORTH CORRIDOR METRORAIL EXTENSION - PRELIMINARY ENGINEERING (100% SUBMITTAL)

MIAMI-DADE COUNTY

MIAMI-DADE TRANSIT

PARSONS
7600 CORPORATE CENTER DRIVE, SUITE 500
MIAMI, FLORIDA 33126
PHONE: (786) 464-1000 FAX: (786) 845-7119
CERTIFICATE OF AUTHORIZATION NO. 1838

H.J. ROSS
201 ALHAMBRA CIRCLE SUITE 900
CORAL GABLES, FLORIDA 33134
PHONE: (305) 567-1888 / FAX: (305) 567-1771
407

Approved | Date | Approved | Date 05-05-06 | $DATE$ | $TIME$ | $FILE$

PLUMBING

NW 82ND ST. STATION PLUMBING SITE PLAN

Scale 1" = 100' | Drawing PL-01 | Sheet 246

G:\550515 No... Corridor\NW 82 ST\Mech\Plbg\SHT\PL-01.dwg, 5/12/2006 1:58:09 PM, blindholm

PLUMBING NOTES:

1. ALL WASTE, VENT AND STORM DRAIN PIPING SHALL BE INSTALED IN STRICT ACCORDANCE WITH THE FLORIDA BUILDING CODE, PLUMBING DIVISION.
2. ALL DOMESTIC WATER PIPING SHALL BE SIZED AND INSTALLED AS PER THE STATE OF FLORIDA BUILDING CODE, PLUMBING DIVISION.

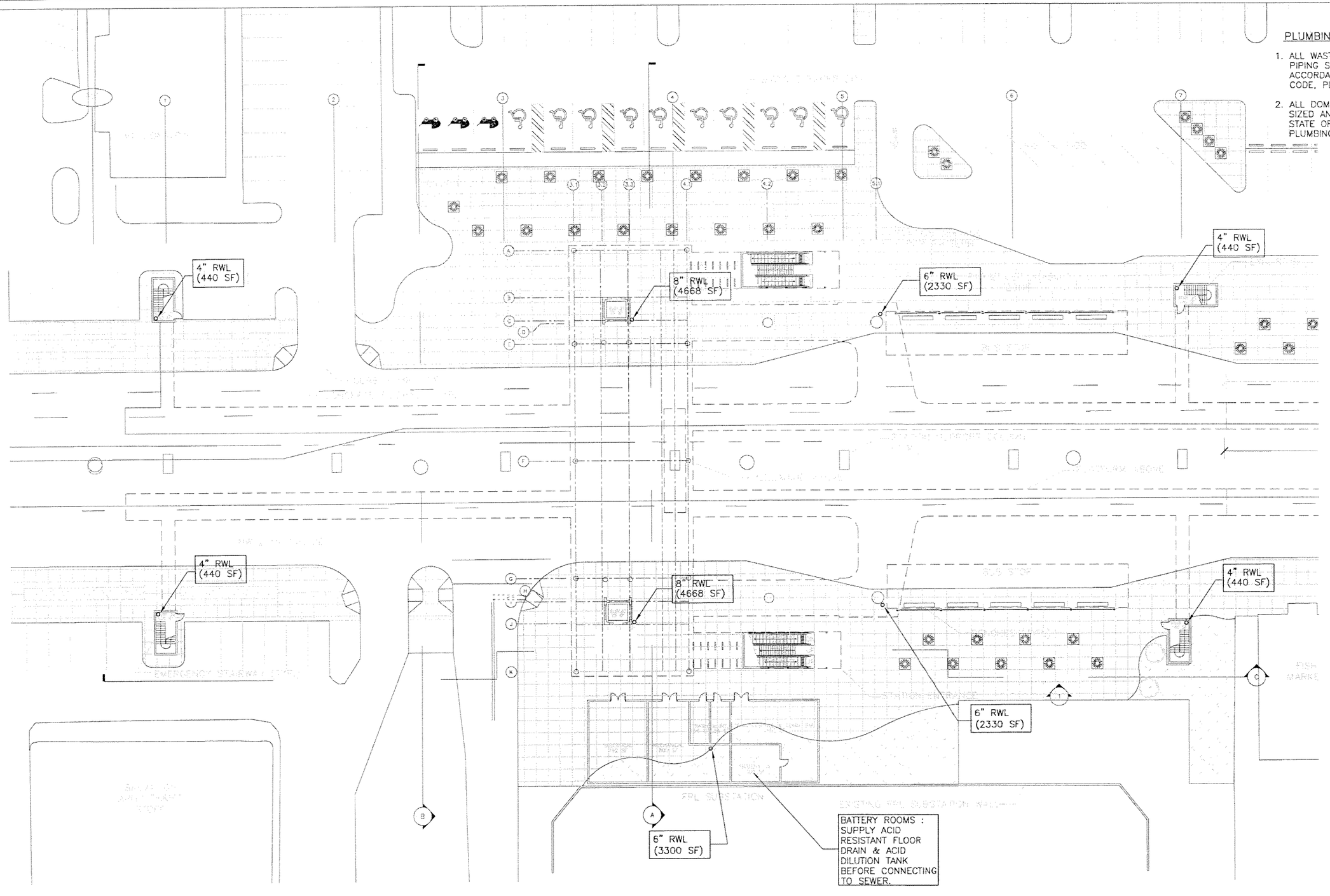

0 10 20 40

SUBJECT TO CHANGE

NORTH CORRIDOR METRORAIL EXTENSION - PRELIMINARY ENGINEERING (100% SUBMITTAL)

PLUMBING

Designed by E.B. Date
Drawn by A.M. Date
Checked by E.B. Date
Approved by G.V. Date

No.	Date	By / Chk	App.	Revisions

MIAMI-DADE COUNTY

MIAMI-DADE TRANSIT

PARSONS
7600 CORPORATE CENTER DRIVE, SUITE 500
MIAMI, FLORIDA 33126
PHONE: (786) 464-1000 FAX: (786) 845-7119
CERTIFICATE OF AUTHORIZATION NO. 1838

H.J. ROSS
201 ALHAMBRA CIRCLE SUITE 900
CORAL GABLES, FLORIDA 33134
PHONE: (305) 567-1888 / FAX: (305) 567-1771
407

Approved	Date	Approved	Date	Scale	Drawing	Sheet
			05-05-06	1"=40'	PL-02	247

$DATE$ $TIME$ $FILE$

NW 82ND ST. STATION PLUMBING PLAZA LEVEL PLAN

G:\550515 No... Corridor\NW 82 STMech\Plbg\SHT\PL-02.dwg, 5/12/2006 1:58:18 PM, blindholm

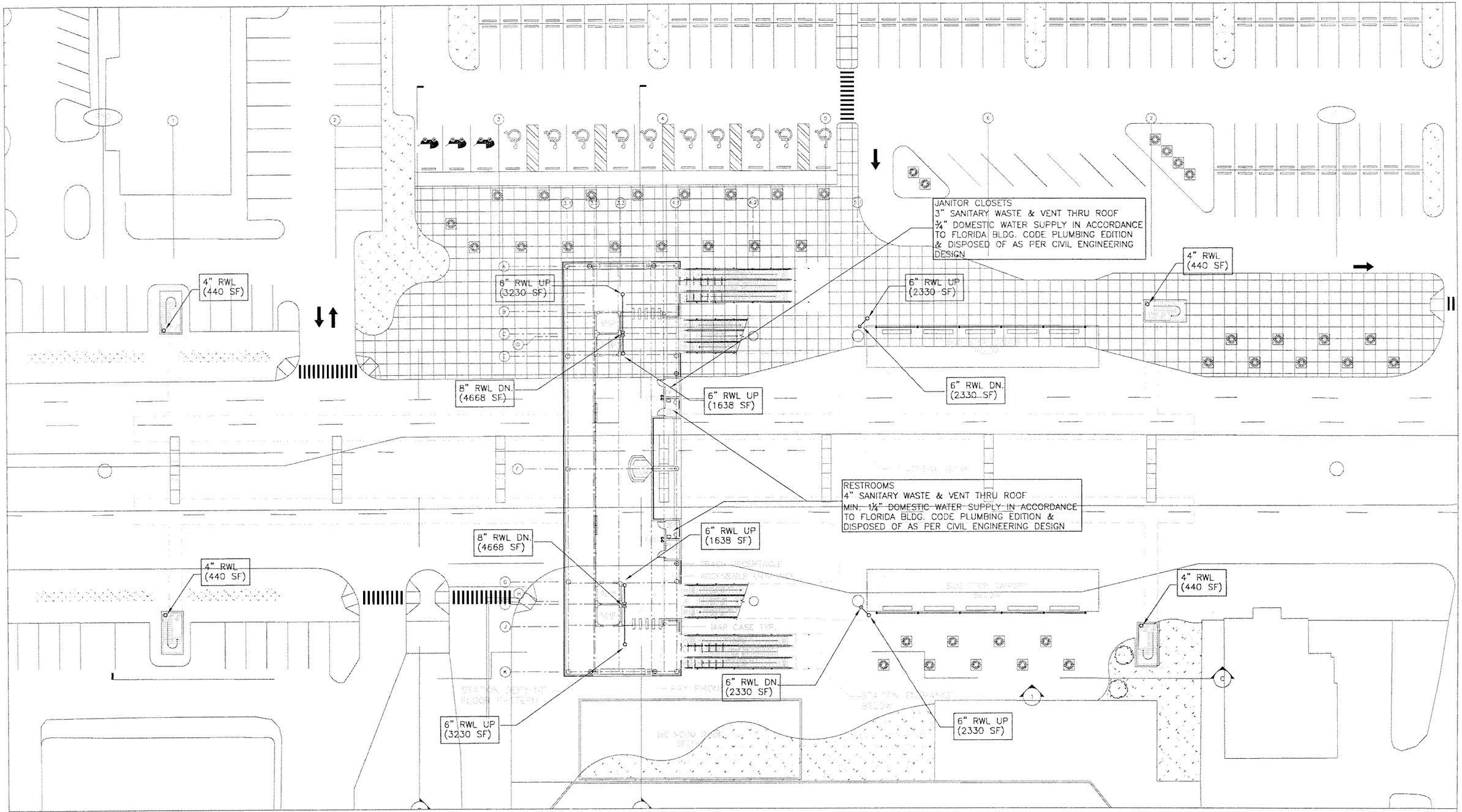

SUBJECT TO CHANGE

Designed by E.B. Date						
Drawn by A.M. Date						
Checked by E.B. Date						
Approved by G.V. Date	No.	Date	By / Chk	App.	Revisions	

NORTH CORRIDOR METRORAIL EXTENSION - PRELIMINARY ENGINEERING (100% SUBMITTAL)

MIAMI-DADE COUNTY

MIAMI-DADE TRANSIT

PARSONS
7600 CORPORATE CENTER DRIVE, SUITE 500
MIAMI, FLORIDA 33126
PHONE: (786) 464-1000 FAX: (786) 845-7119
CERTIFICATE OF AUTHORIZATION NO. 1638

H.J. ROSS
201 ALHAMBRA CIRCLE SUITE 900
CORAL GABLES, FLORIDA 33134
PHONE: (305) 567-1888 / FAX: (305) 567-1771
407

Approved	Date	Approved	Date	Scale	Drawing	Sheet
			05-05-06	1" = 10'	PL-03	246
			$DATE$ $TIME$ $FILE$			

PLUMBING

NW 82ND ST. STATION PLUMBING MEZZANINE LEVEL PLAN

G:\550515 No...\...Corridor\NW 82 ST\Mech\Plbg\SHTPL-03.dwg, 5/12/2006 1:58:28 PM, blindholm

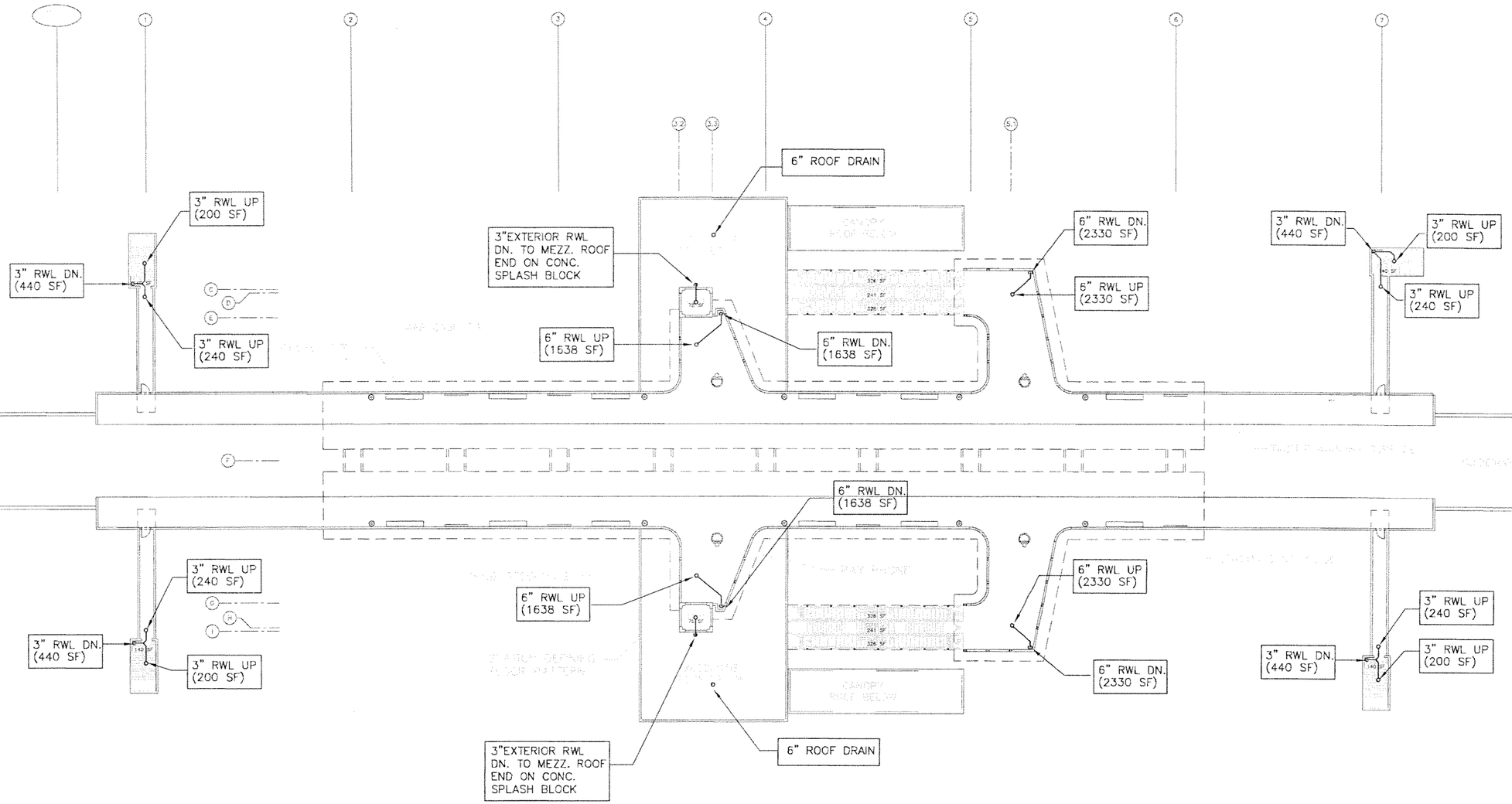

0 10 20 40

SUBJECT TO CHANGE

G:\1550515 No... Corridor\NW 82 ST\Mech\Plbg\SHTTPL-04.dwg, 5/12/2006 1:58:37 PM, blindholm

Designed by E.B. Date						
Drawn by A.M. Date						
Checked by E.B. Date						
Approved by G.V. Date	No.	Date	By / Chk	App.	Revisions	

NORTH CORRIDOR METRORAIL EXTENSION - PRELIMINARY ENGINEERING (100% SUBMITTAL)

MIAMI-DADE COUNTY

MIAMI-DADE TRANSIT

PARSONS
7600 CORPORATE CENTER DRIVE, SUITE 500
MIAMI, FLORIDA 33126
PHONE: (786) 464-1000 FAX: (786) 845-7119
CERTIFICATE OF AUTHORIZATION NO. 1838

H.J. ROSS
201 ALHAMBRA CIRCLE SUITE 900
CORAL GABLES, FLORIDA 33134
PHONE: (305) 567-1888 / FAX: (305) 567-1771
407

Approved	Date	Approved	Date
			05-05-06

PLUMBING

NW 82ND ST. STATION PLUMBING PLATFORM LEVEL PLAN

Scale 1"=40' | Drawing PL-04 | Sheet 249

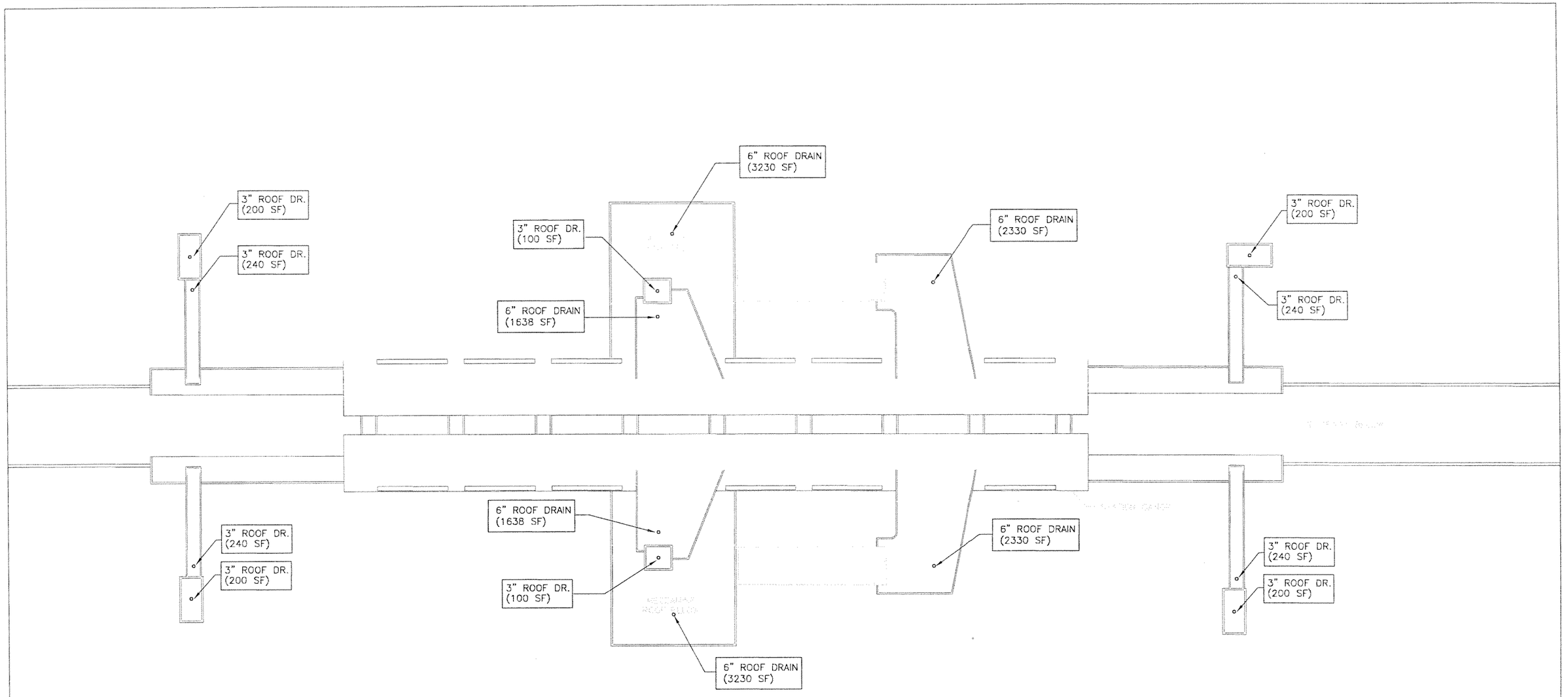

0 10 20 40

SUBJECT TO CHANGE

G:\550515 No...Corridor\NW 82 ST\Mech\Plbg\SHT\PL-05.dwg, 5/12/2006 1:58:42 PM, blindholm

Designed by E.B. Date							
Drawn by A.M. Date							
Checked by E.B. Date							
Approved by G.V. Date	No.	Date	By / Chk	App.	Revisions		

NORTH CORRIDOR METRORAIL EXTENSION - PRELIMINARY ENGINEERING (100% SUBMITTAL)

PLUMBING

MIAMI-DADE COUNTY

MIAMI-DADE TRANSIT

PARSONS
7600 CORPORATE CENTER DRIVE, SUITE 500
MIAMI, FLORIDA 33126
PHONE: (786) 464-1000 FAX: (786) 845-7119
CERTIFICATE OF AUTHORIZATION NO. 1838

H.J. ROSS
201 ALHAMBRA CIRCLE SUITE 900
CORAL GABLES, FLORIDA 33134
PHONE: (305) 567-1888 / FAX: (305) 567-1771
407

Approved	Date	Approved	Date	Scale	Drawing	Sheet
STATE'S		STATE'S	05-05-06	1"=40'	PL-05	250
STATE'S		STATE'S				

NW 82ND ST. STATION PLUMBING ROOF PLAN

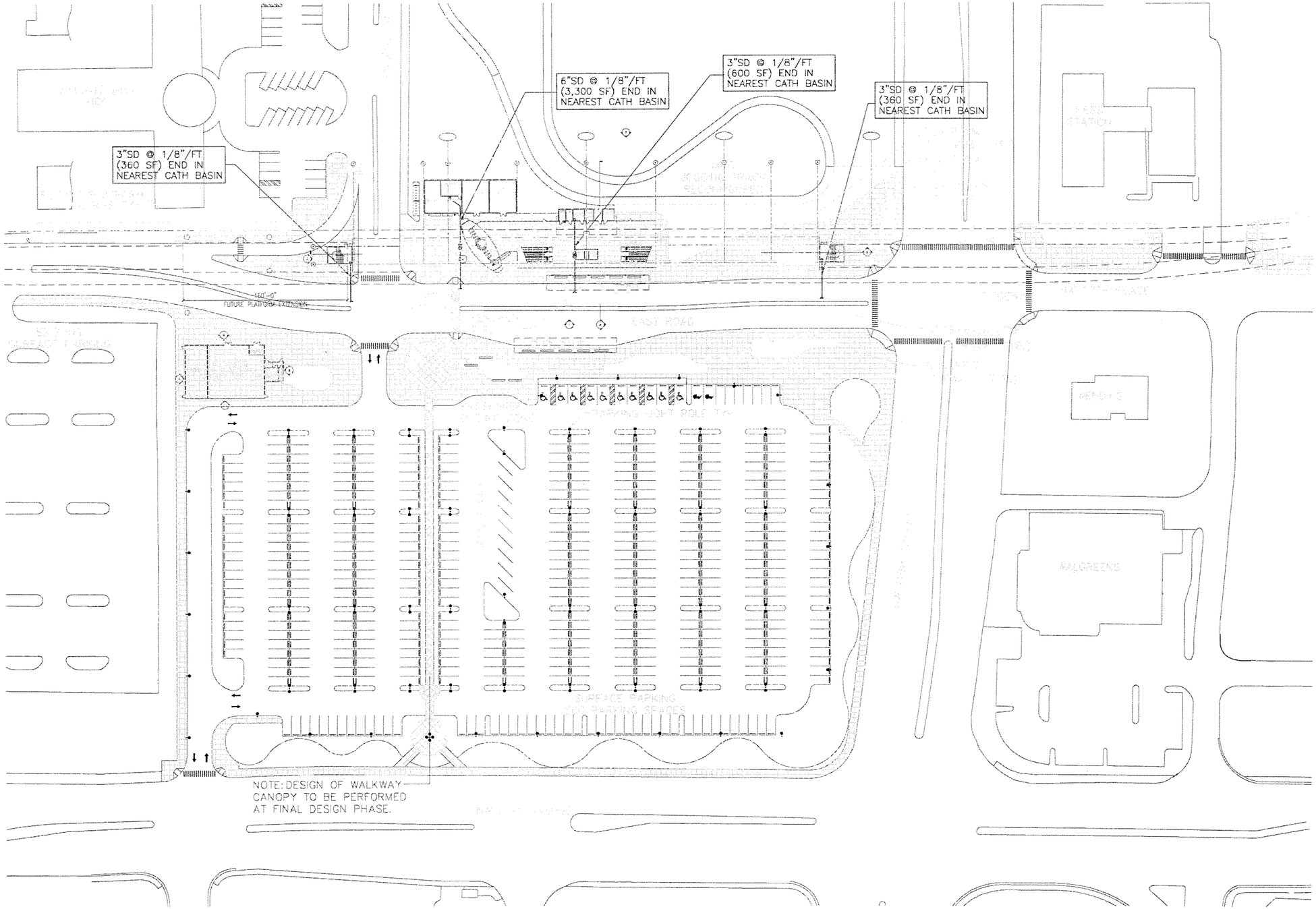

SUBJECT TO CHANGE

Designed by E.B. Date						NORTH CORRIDOR METRORAIL EXTENSION - PRELIMINARY ENGINEERING (100% SUBMITTAL)	PLUMBING
Drawn by A.M. Date							
Checked by E.B. Date							
Approved by G.V. Date	No.	Date	By / Chk	App.	Revisions	MIAMI-DADE COUNTY / MIAMI-DADE TRANSIT	NW 119TH ST. STATION PLUMBING SITE PLAN

PARSONS
7600 CORPORATE CENTER DRIVE, SUITE 500
MIAMI, FLORIDA 33126
PHONE: (786) 464-1000 FAX: (786) 845-7119
CERTIFICATE OF AUTHORIZATION NO. 1838

H.J. ROSS
201 ALHAMBRA CIRCLE SUITE 900
CORAL GABLES, FLORIDA 33134
PHONE: (305) 567-1888 / FAX: (305) 567-1771
407

Approved | Date | Approved | Date 05-05-06 | Scale 1"=100' | Drawing PL-06 | Sheet 251

$DATE$ $TIME$ $FILE$

G:\550515 N... Corridor\NW 119 ST\Mech\Plbg\SHT\PL-06.dwg, 5/12/2006 2:15:24 PM, blindho.

BATTERY ROOMS :
SUPPLY ACID RESISTANT FLOOR DRAIN & ACID DILUTION TANK BEFORE CONNECTING TO SEWER.
3/4"CW FOR EMERGENCY EYE WASH.

PROVIDE 3/4"CW STUB-UP @ 6" AFF IN ELECTRICAL ROOM & CAP FOR ELECTRICAL GROUNDING.

JANITOR CLOSETS
3" SANITARY WASTE & VENT THRU ROOF
¾" DOMESTIC WATER SUPPLY IN ACCORDANCE TO FLORIDA BLDG. CODE PLUMBING EDITION & DISPOSED OF AS PER CIVIL ENGINEERING DESIGN

3"RWL UP (600 SF)

6"RWL UP (3,300 SF)

3"RWL DN. (600 SF)

3"SD @ 1/8"/FT (360 SF) END IN NEAREST CATH BASIN

RESTROOMS
4" SANITARY WASTE & VENT THRU ROOF
MIN. 1¼" DOMESTIC WATER SUPPLY IN ACCORDANCE TO FLORIDA BLDG. CODE PLUMBING EDITION & DISPOSED OF AS PER CIVIL ENGINEERING DESIGN

3"SD @ 1/8"/FT (360 SF) END IN NEAREST CATH BASIN

-0"
RM EXTENSION

PLUMBING NOTES:

1. ALL WASTE, VENT AND STORM DRAIN PIPING SHALL BE INSTALED IN STRICT ACCORDANCE WITH THE FLORIDA BUILDING CODE, PLUMBING DIVISION.
2. ALL DOMESTIC WATER PIPING SHALL BE SIZED AND INSTALLED AS PER THE STATE OF FLORIDA BUILDING CODE, PLUMBING DIVISION.

0 10 20 40

SUBJECT TO CHANGE

G:\550515 Nc...Corridor\NW 119 ST\Mech\Plbg\SHT\PL-07.dwg, 5/12/2006 2:15:34 PM, blindhol

Designed by E.B. Date						
Drawn by A.M. Date						
Checked by E.B. Date						
Approved by G.V. Date	No.	Date	By / Chk	App.	Revisions	

NORTH CORRIDOR METRORAIL EXTENSION - PRELIMINARY ENGINEERING (100% SUBMITTAL)

MIAMI-DADE COUNTY

MIAMI-DADE TRANSIT

PARSONS
7600 CORPORATE CENTER DRIVE, SUITE 500
MIAMI, FLORIDA 33126
PHONE: (786) 464-1000 FAX: (786) 845-7119
CERTIFICATE OF AUTHORIZATION NO. 1838

Approved | Date

H.J. ROSS
201 ALHAMBRA CIRCLE SUITE 900
CORAL GABLES, FLORIDA 33134
PHONE: (305) 567-1888 / FAX: (305) 567-1771
407

Approved | Date 05-05-06

$DATE$ $TIME$ $FILE$

PLUMBING

NW 119TH ST. STATION PLUMBING PLAZA LEVEL PLAN

Scale 1" = 40' | Drawing PL-07 | Sheet 252

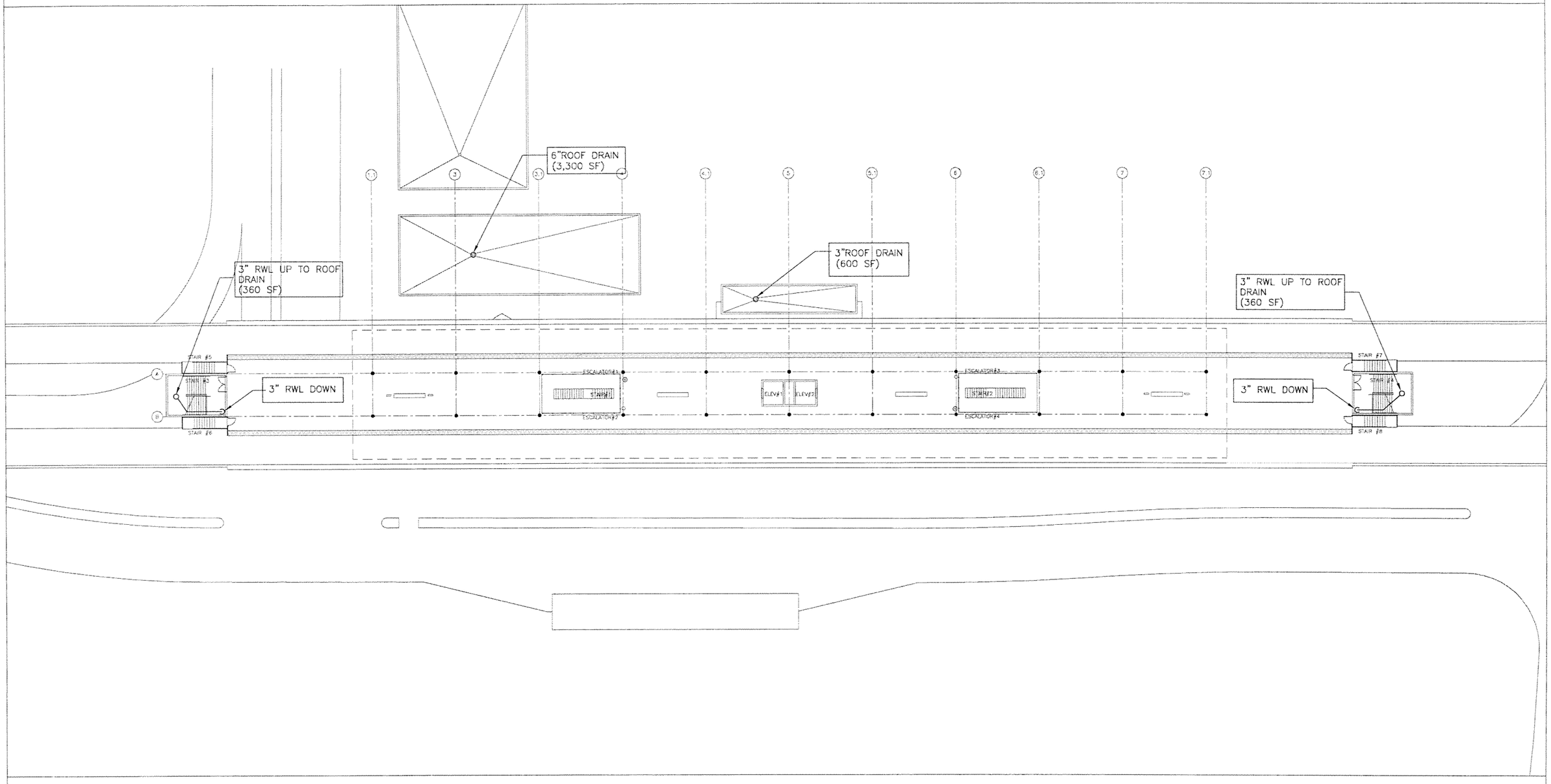

0 10 20 40

SUBJECT TO CHANGE

Designed by E.B. Date							
Drawn by A.M. Date							
Checked by E.B. Date							
Approved by G.V. Date	No.	Date	By / Chk	App.	Revisions		

NORTH CORRIDOR METRORAIL EXTENSION - PRELIMINARY ENGINEERING (100% SUBMITTAL)

MIAMI-DADE COUNTY

MIAMI-DADE TRANSIT

PARSONS
7600 CORPORATE CENTER DRIVE, SUITE 500
MIAMI, FLORIDA 33126
PHONE: (786) 464-1000 FAX: (786) 845-7119
CERTIFICATE OF AUTHORIZATION NO. 1838

Approved | Date

H.J. ROSS
201 ALHAMBRA CIRCLE SUITE 900
CORAL GABLES, FLORIDA 33134
PHONE: (305) 567-1888 / FAX: (305) 567-1771
407

Approved | Date 05-05-06

$DATE$ $TIME$ $FILE$

PLUMBING

NW 119TH ST. STATION PLUMBING PLATFORM PLAN

Scale 1" = 10' | Drawing PL-08 | Sheet 253

G:\550515 No... Corridor\NW 119 ST\Mech\Plbg\SHT\PL-08.dwg, 5/12/2006 2:15:43 PM, blindhol

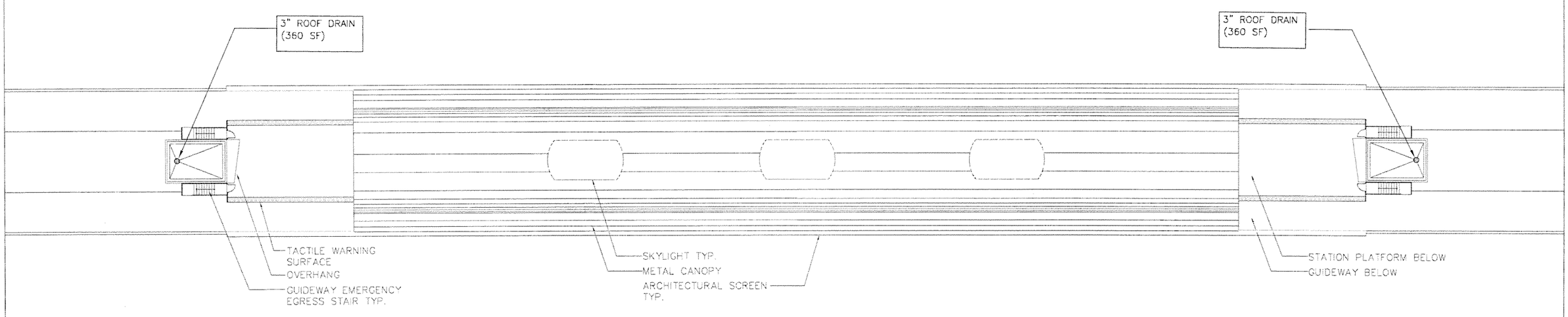

0 10 20 40

SUBJECT TO CHANGE

Designed by E.B. Date						
Drawn by A.M. Date						
Checked by E.B. Date						
Approved by G.V. Date	No.	Date	By Chk	App.	Revisions	

NORTH CORRIDOR METRORAIL EXTENSION - PRELIMINARY ENGINEERING (100% SUBMITTAL)

PLUMBING

MIAMI-DADE COUNTY

MIAMI-DADE TRANSIT

PARSONS
7600 CORPORATE CENTER DRIVE, SUITE 500
MIAMI, FLORIDA 33126
PHONE: (786) 464-1000 FAX: (786) 845-7119
CERTIFICATE OF AUTHORIZATION NO. 1838

H.J. ROSS
201 ALHAMBRA CIRCLE SUITE 900
CORAL GABLES, FLORIDA 33134
PHONE: (305) 567-1888 / FAX: (305) 567-1771
407

Approved	Date	Approved	Date	Scale	Drawing	Sheet
			05-05-06	1" = 40'	PL-09	254

$DATES $TIMES $FILES

NW 119TH ST. STATION PLUMBING ROOF PLAN

G:\550515 N...Corridor\NW 119 ST\Mech\Plbg\SHT\PL-09.dwg, 5/12/2006 2:15:48 PM, blindhol...

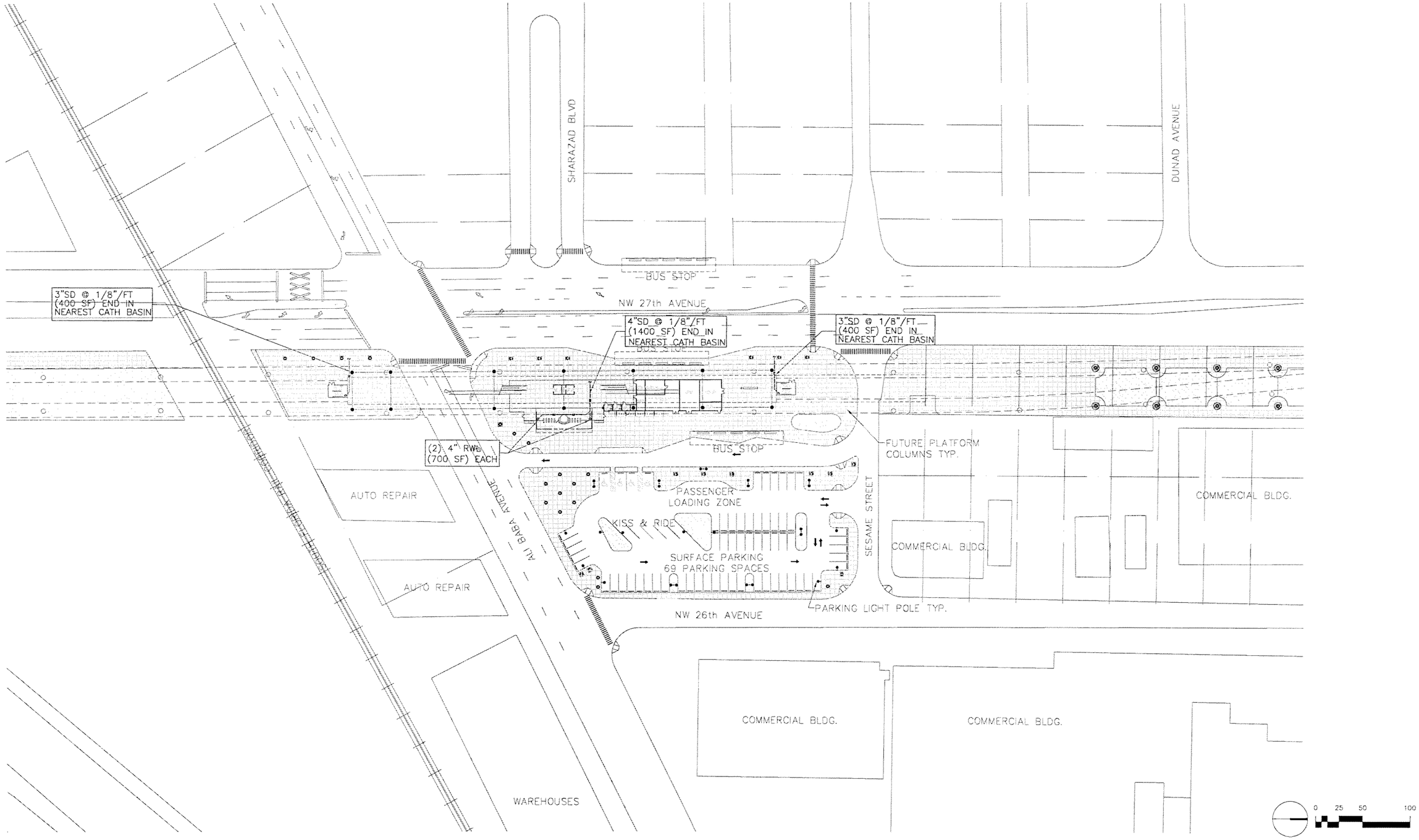

SUBJECT TO CHANGE

Designed by E.B. Date						
Drawn by A.M. Date						
Checked by E.B. Date						
Approved by G.V. Date	No.	Date	By / Chk	App.	Revisions	

NORTH CORRIDOR METRORAIL EXTENSION - PRELIMINARY ENGINEERING (100% SUBMITTAL)

MIAMI-DADE COUNTY

MIAMI-DADE TRANSIT

PARSONS
7600 CORPORATE CENTER DRIVE, SUITE 500
MIAMI, FLORIDA 33126
PHONE: (786) 464-1000 FAX: (786) 845-7119
CERTIFICATE OF AUTHORIZATION NO. 1838

H.J. ROSS
201 ALHAMBRA CIRCLE SUITE 900
CORAL GABLES, FLORIDA 33134
PHONE: (305) 567-1888 / FAX: (305) 567-1771
407

Approved	Date	Approved	Date	Scale	Drawing	Sheet
			05-05-06	1" = 100'	PL-10	255
			$DATE$	$TIME$	$FILE$	

PLUMBING

NW ALI BABA AVE. STATION PLUMBING SITE PLAN

G:\550515 N...CorridorNW 143 ST\Mech\Plbg\SHTPL-10.dwg, 5/12/2006 2:31:25 PM, blindho

G:\1550515 No... Corridor\NW 143 ST\Mech\Plbg\SHT\PL-11.dwg, 5/12/2006 2:31:35 PM, blindholm

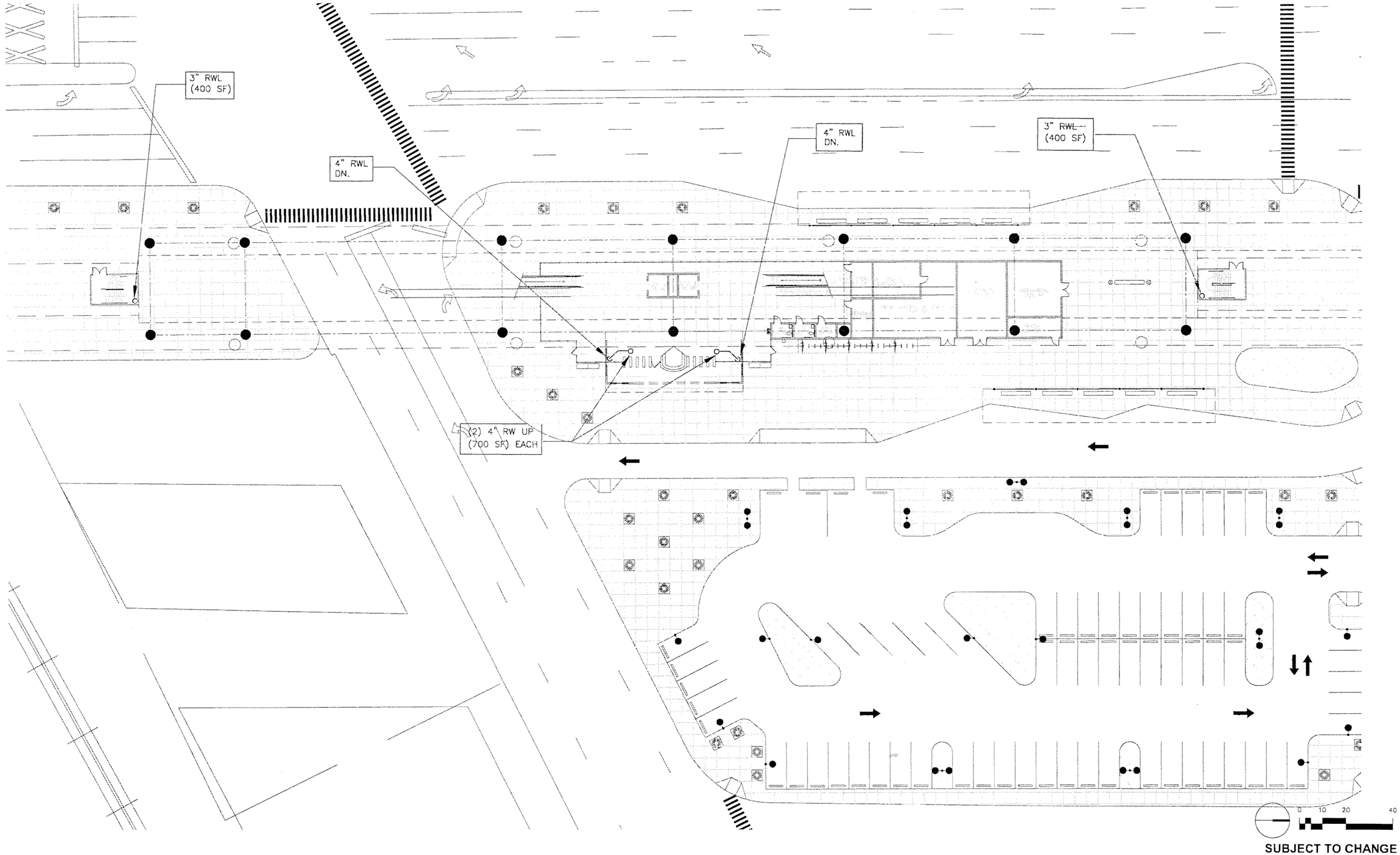

SUBJECT TO CHANGE

Designed by E.B.. Date							
Drawn by A.M. Date							
Checked by E.B. Date							
Approved by G.V. Date	No.	Date	By / Chk	App.	Revisions		

NORTH CORRIDOR METRORAIL EXTENSION - PRELIMINARY ENGINEERING (100% SUBMITTAL)

PLUMBING

MIAMI-DADE COUNTY

MIAMI-DADE TRANSIT

PARSONS
7600 CORPORATE CENTER DRIVE, SUITE 500
MIAMI, FLORIDA 33126
PHONE: (786) 464-1000 FAX: (786) 845-7119
CERTIFICATE OF AUTHORIZATION NO. 1838

Approved | Date

H.J. ROSS
201 ALHAMBRA CIRCLE SUITE 900
CORAL GABLES, FLORIDA 33134
PHONE: (305) 567-1888 / FAX: (305) 567-1771
407

Approved | Date 05-05-06

NW ALI BABA AVE. STATION PLUMBING PLAZA LEVEL PLAN

Scale 1" = 40' | Drawing PL-11 | Sheet 256

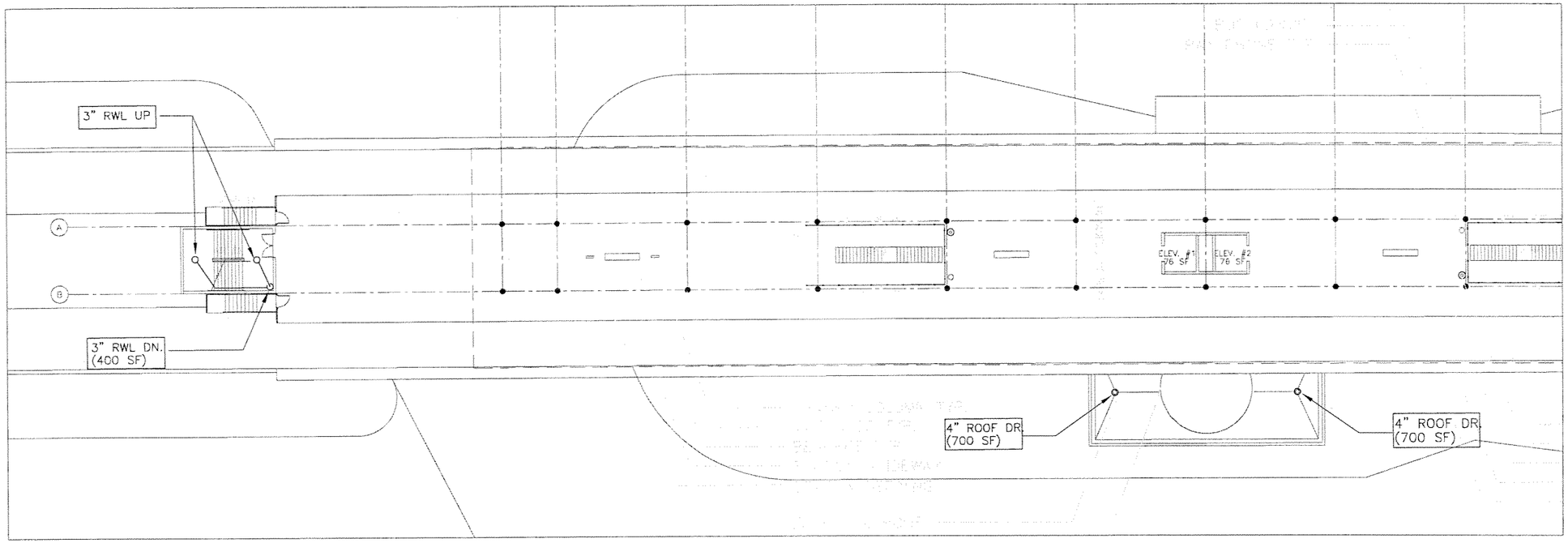

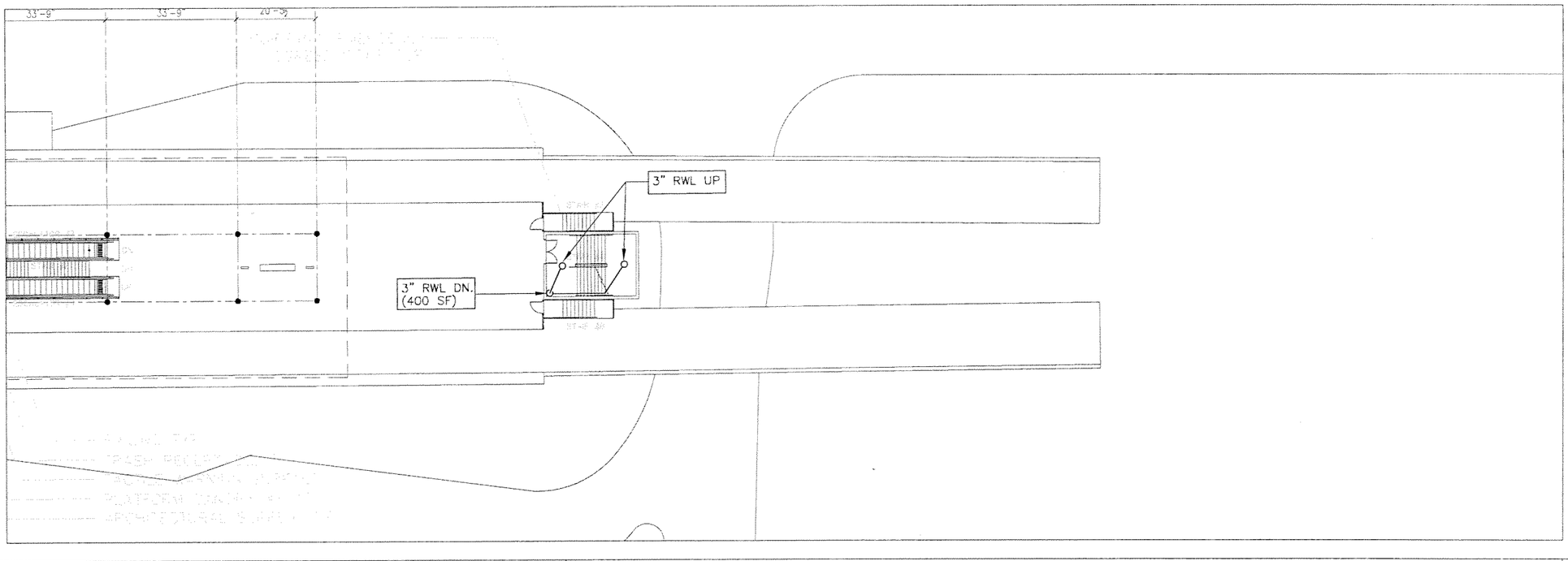

0 8 15 32

SCALE: 1/16" = 1'-0"

SUBJECT TO CHANGE

G:\550515 Nortı Corridor\NW 143 ST\Mech\Plbg\SHT\PL-12.dwg, 5/12/2006 2:31:43 PM, blindholn.

Designed by E.B.	Date					
Drawn by A.M.	Date					
Checked by E.B.	Date					
Approved by G.V.	Date	No.	Date	By / Chk	App.	Revisions

NORTH CORRIDOR METRORAIL EXTENSION - PRELIMINARY ENGINEERING (100% SUBMITTAL)

MIAMI-DADE COUNTY

MIAMI-DADE TRANSIT

PARSONS
7600 CORPORATE CENTER DRIVE, SUITE 500
MIAMI, FLORIDA 33126
PHONE: (786) 464-1000 FAX: (786) 845-7119
CERTIFICATE OF AUTHORIZATION NO. 1838

Approved | Date

H.J. ROSS
201 ALHAMBRA CIRCLE SUITE 900
CORAL GABLES, FLORIDA 33134
PHONE: (305) 567-1888 / FAX: (305) 567-1771
407

Approved | Date 05-05-06

PLUMBING

NW ALI BABA AVE. STATION PLUMBING PLATFORM PLAN

Scale SEE PLAN | Drawing PL-12 | Sheet 257

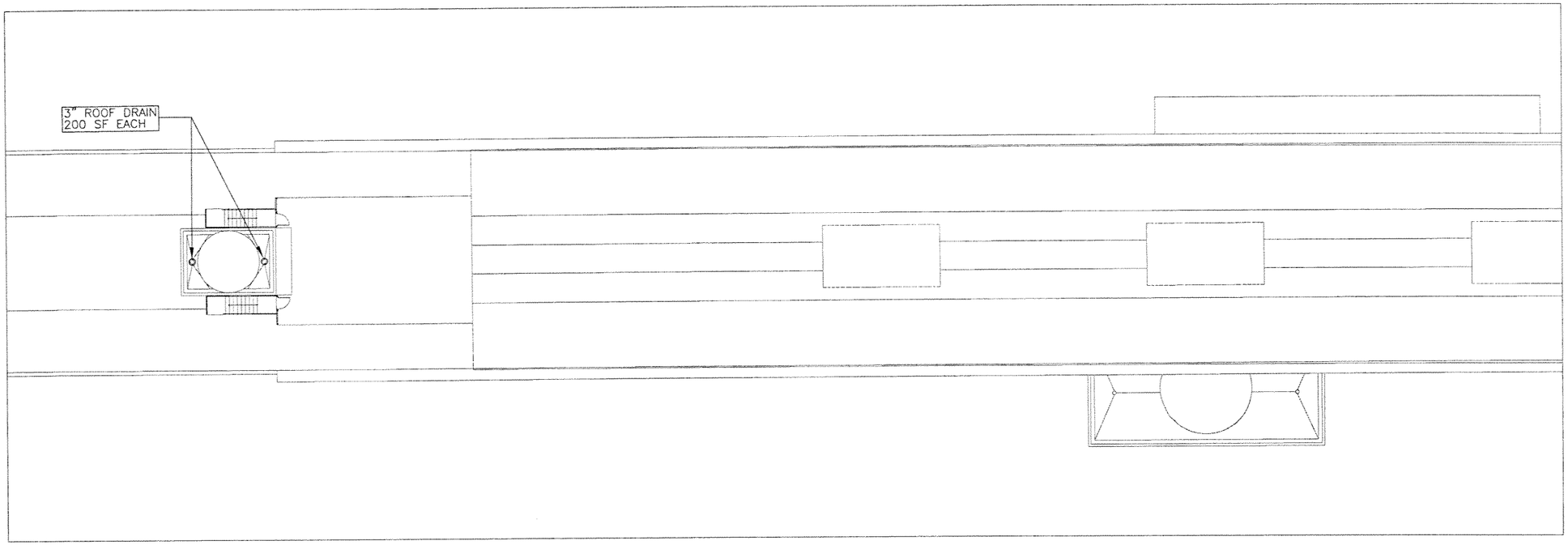

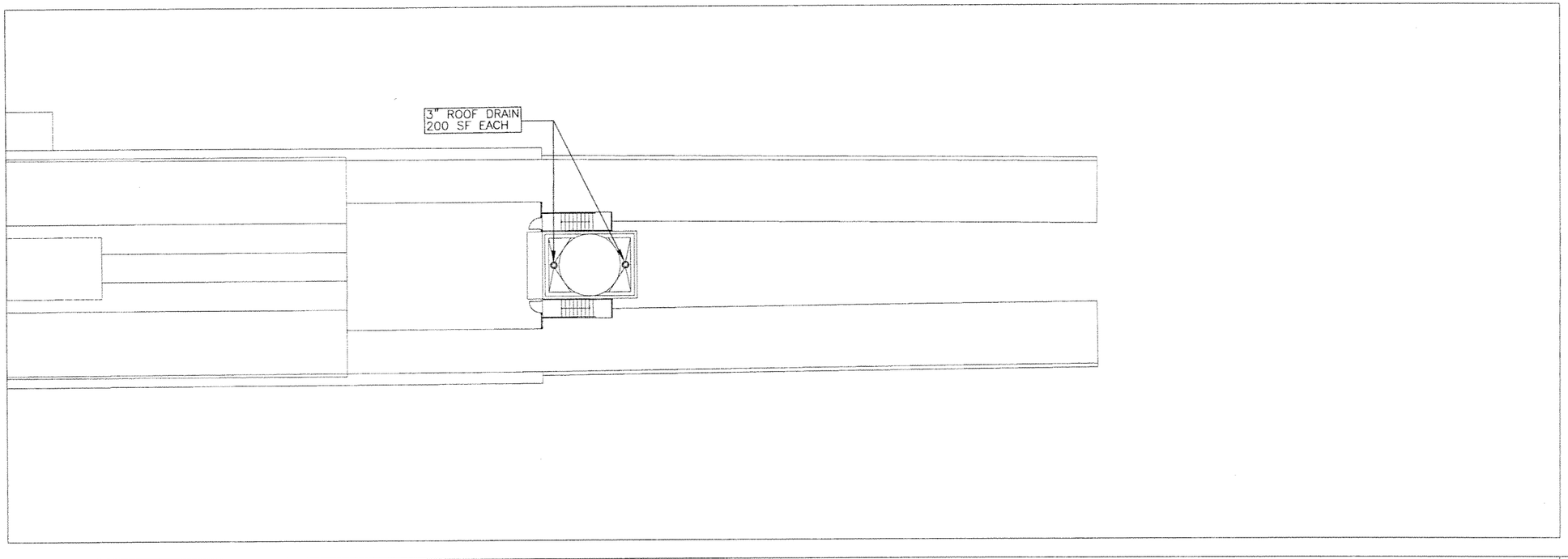

0 8 16 32

SCALE: 1/16" = 1'-0"

SUBJECT TO CHANGE

G:\550515 North Corridor\NW 143 ST\Mech\Plbg\SHTPL-13.dwg, 5/12/2006 2:31:48 PM, blindholr

Designed by E.B. Date							
Drawn by A.M. Date							
Checked by E.B. Date							
Approved by G.V. Date	No.	Date	By / Chk	App.	Revisions		

NORTH CORRIDOR METRORAIL EXTENSION - PRELIMINARY ENGINEERING (100% SUBMITTAL)

MIAMI-DADE COUNTY

MIAMI-DADE TRANSIT

PARSONS
7600 CORPORATE CENTER DRIVE, SUITE 500
MIAMI, FLORIDA 33126
PHONE: (786) 464-1000 FAX: (786) 845-7119
CERTIFICATE OF AUTHORIZATION NO. 1838

H.J. ROSS
201 ALHAMBRA CIRCLE SUITE 900
CORAL GABLES, FLORIDA 33134
PHONE: (305) 567-1888 / FAX: (305) 567-1771
407

Approved	Date	Approved	Date	Scale	Drawing	Sheet
			05-05-06	SEE PLAN	PL-13	258
			$DATE$ $TIME$	$FILE$		

PLUMBING

NW ALI BABA AVE. STATION PLUMBING ROOF PLAN

NW 27th PL

NW 28th AVE

NW 27th COURT

MATCH LINE

3" STORM DR. TO NEAREST CATCH BASIN

3" STORM DR. TO NEAREST CATCH BASIN

3"RWL UP

3"RWL UP

BUS STOP

BUS STOP

MATCH LINE

NW 164TH STREET

FURNITURE STORE

0 25 50 100

SUBJECT TO CHANGE

Designed by E.B. Date

Drawn by A.M. Date

Checked by E.B. Date

Approved by G.V. Date

No.	Date	By / Chk	App.	Revisions

NORTH CORRIDOR METRORAIL EXTENSION - PRELIMINARY ENGINEERING (100% SUBMITTAL)

MIAMI-DADE COUNTY

MIAMI-DADE TRANSIT

PARSONS
7600 CORPORATE CENTER DRIVE, SUITE 500
MIAMI, FLORIDA 33126
PHONE: (786) 464-1000 FAX: (786) 845-7119
CERTIFICATE OF AUTHORIZATION NO. 1838

H.J. ROSS
201 ALHAMBRA CIRCLE SUITE 900
CORAL GABLES, FLORIDA 33134
PHONE: (305) 567-1888 / FAX: (305) 567-1771
407

Approved	Date	Approved	Date	Scale	Drawing	Sheet
			05-05-06	1" = 100'	PL-14	259

$DATE$ $TIME$ $FILE$

PLUMBING

NW 163RD ST. STATION
PLUMBING
SITE PLAN

G:\550515 Nc ...Corridor\NW 163 ST\Mech\Plbg\SHT\PL-14.dwg, 5/12/2006 2:49:15 PM, blindholi

NW 28th AVE

MATCH LINE

MASONRY WALL

METAL FENCE

MATCH LINE

NO PLUMBING WORK INDICATED
FOR THIS AREA FOR THIS SUBMITTAL.

0 25 50 100

SUBJECT TO CHANGE

G:\550515 N... Corridor\NW 163 ST\Mech\Plbg\SHT\PL-15.dwg, 5/12/2006 2:49:32 PM, blindhol...

Designed by E.B.	Date						
Drawn by XX	Date						
Checked by E.B.	Date						
Approved by G.V.	Date	No.	Date	By Chk	App.	Revisions	

NORTH CORRIDOR METRORAIL EXTENSION - PRELIMINARY ENGINEERING (100% SUBMITTAL)

MIAMI-DADE COUNTY

MIAMI-DADE TRANSIT

PARSONS
7600 CORPORATE CENTER DRIVE, SUITE 500
MIAMI, FLORIDA 33126
PHONE: (786) 464-1000 FAX: (786) 845-7119
CERTIFICATE OF AUTHORIZATION NO. 1838

H.J. ROSS
201 ALHAMBRA CIRCLE SUITE 900
CORAL GABLES, FLORIDA 33134
PHONE: (305) 567-1888 / FAX: (305) 567-1771
407

Approved	Date	Approved	Date	Scale	Drawing	Sheet
			05-05-06	1" = 100'	PL-15	260

PLUMBING

NW 163RD ST. STATION
PLUMBING
SITE PLAN-cont'd

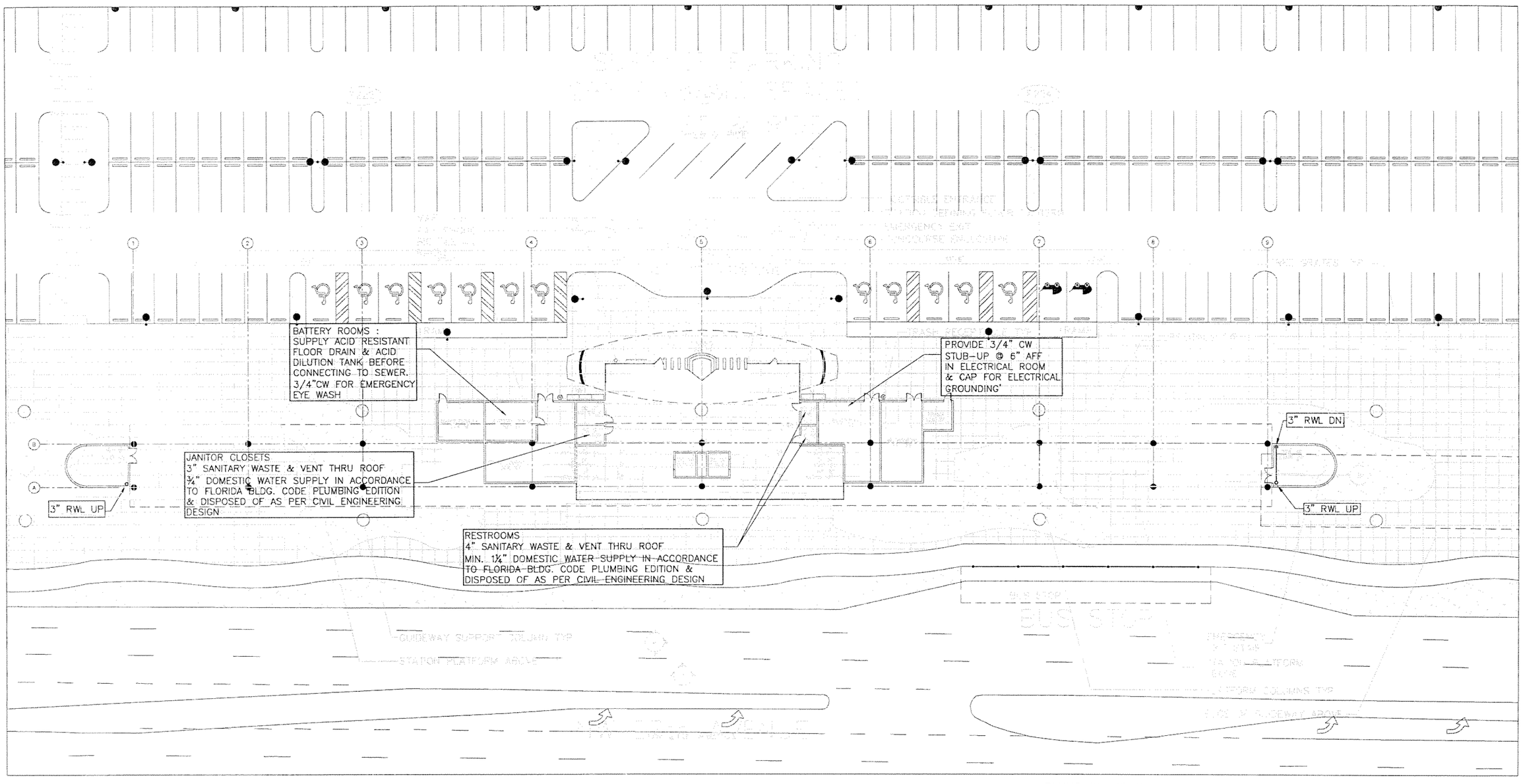

PLUMBING NOTES:

1. ALL WASTE, VENT AND STORM DRAIN PIPING SHALL BE INSTALED IN STRICT ACCORDANCE WITH THE FLORIDA BUILDING CODE, PLUMBING DIVISION.
2. ALL DOMESTIC WATER PIPING SHALL BE SIZED AND INSTALLED AS PER THE STATE OF FLORIDA BUILDING CODE, PLUMBING DIVISION.

0 10 20 40

SUBJECT TO CHANGE

Designed by E.B. Date
Drawn by A.M. Date
Checked by E.B. Date
Approved by G.V. Date

No.	Date	By / Chk	App.	Revisions

NORTH CORRIDOR METRORAIL EXTENSION - PRELIMINARY ENGINEERING (100% SUBMITTAL)

MIAMI-DADE COUNTY

MIAMI-DADE TRANSIT

PARSONS
7600 CORPORATE CENTER DRIVE, SUITE 500
MIAMI, FLORIDA 33126
PHONE: (786) 464-1000 FAX: (786) 845-7119
CERTIFICATE OF AUTHORIZATION NO. 1838

Approved Date

H.J. ROSS
201 ALHAMBRA CIRCLE SUITE 900
CORAL GABLES, FLORIDA 33134
PHONE: (305) 567-1888 / FAX: (305) 567-1771
407

Approved Date 05-05-06

PLUMBING

NW 163RD ST. STATION PLUMBING PLAZA LEVEL PLAN

Scale 1"=40' Drawing PL-16 Sheet 261

G:\550515 NC...CorridorNW 163 ST\Mech\Plbg\SHT\PL-16.dwg, 5/12/2006 2:49:46 PM, blindholt

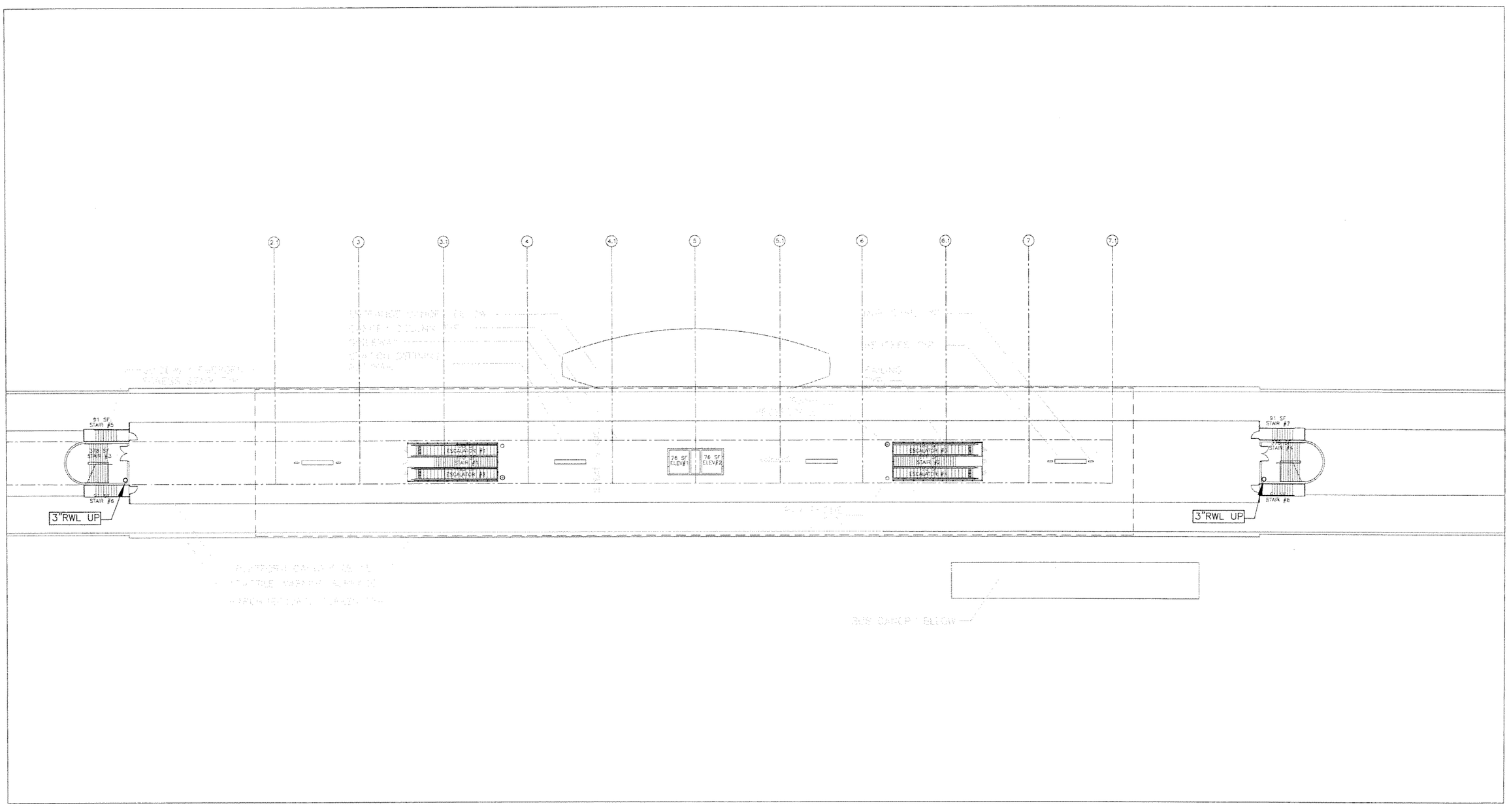

SUBJECT TO CHANGE

Designed by E.B. Date						NORTH CORRIDOR METRORAIL EXTENSION - PRELIMINARY ENGINEERING (100% SUBMITTAL)	PLUMBING
Drawn by A.M. Date							
Checked by E.B. Date							
Approved by G.V. Date	No.	Date	By / Chk	App.	Revisions	MIAMI-DADE COUNTY / MIAMI-DADE TRANSIT	NW 163RD ST. STATION PLUMBING PLATFORM LEVEL PLAN

PARSONS
7500 CORPORATE CENTER DRIVE, SUITE 500
MIAMI, FLORIDA 33126
PHONE: (786) 464-1000 FAX: (786) 845-7119
CERTIFICATE OF AUTHORIZATION NO. 1838

H.J. ROSS
201 ALHAMBRA CIRCLE SUITE 900
CORAL GABLES, FLORIDA 33134
PHONE: (305) 567-1888 / FAX: (305) 567-1771
407

Approved	Date	Approved	Date	Scale	Drawing	Sheet
			05-05-06	1"=40'	PL-17	262

G:\550515 NC...orridor\NW 163 STMech\Plbg\SHT\PL-17.dwg, 5/12/2006 2:49:54 PM, blindholt

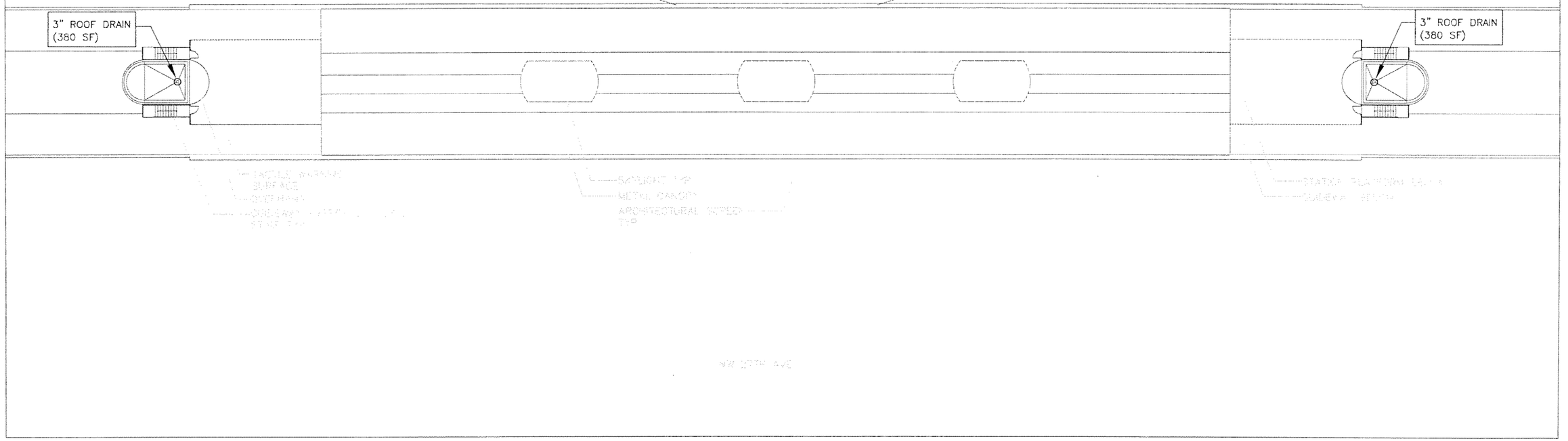

0 10 20 40

SUBJECT TO CHANGE

Designed by E.B. Date							
Drawn by A.M. Date							
Checked by E.B. Date							
Approved by G.V. Date	No.	Date	By / Chk	App.	Revisions		

NORTH CORRIDOR METRORAIL EXTENSION - PRELIMINARY ENGINEERING (100% SUBMITTAL)

MIAMI-DADE COUNTY

MIAMI-DADE TRANSIT

PARSONS
7600 CORPORATE CENTER DRIVE, SUITE 500
MIAMI, FLORIDA 33126
PHONE: (786) 464-1000 FAX: (786) 845-7119
CERTIFICATE OF AUTHORIZATION NO. 1838

Approved | Date

H.J. ROSS
201 ALHAMBRA CIRCLE SUITE 900
CORAL GABLES, FLORIDA 33134
PHONE: (305) 567-1888 / FAX: (305) 567-1771
407

Approved | Date 05-05-06

PLUMBING

NW 163RD ST. STATION PLUMBING ROOF LEVEL PLAN

Scale 1"=40' | Drawing PL-18 | Sheet 263

G:\550515 No... Corridor\NW 163 ST\Mech\Plbg\SHT\PL-18.dwg, 5/12/2006 2:50:04 PM, blindholt,

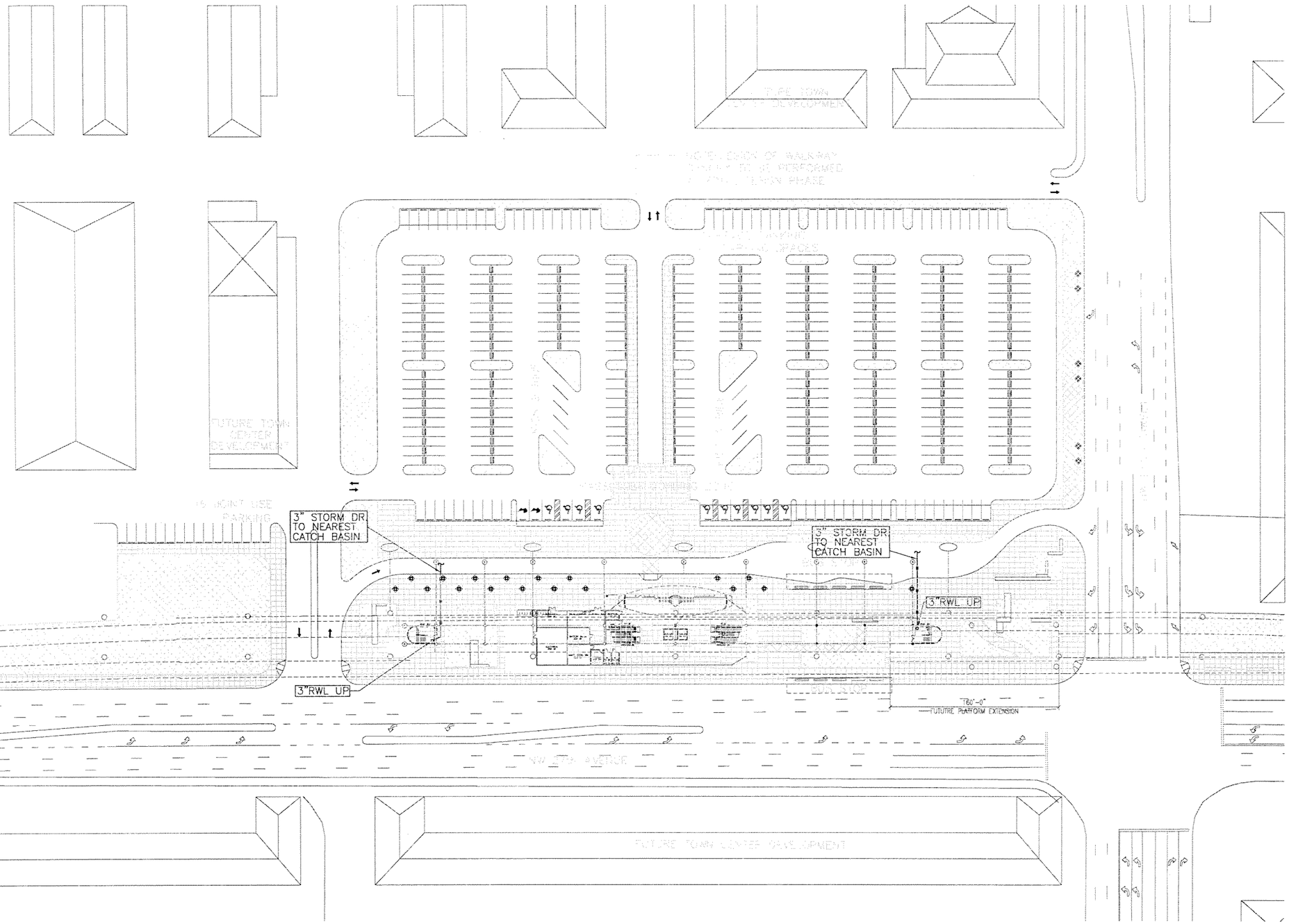

0 25 50 100

SUBJECT TO CHANGE

Designed by E.B. Date						
Drawn by A.M. Date						
Checked by E.B. Date						
Approved by G.V. Date	No.	Date	By / Chk	App.	Revisions	

NORTH CORRIDOR METRORAIL EXTENSION - PRELIMINARY ENGINEERING (100% SUBMITTAL)

MIAMI-DADE COUNTY

MIAMI-DADE TRANSIT

PARSONS
7600 CORPORATE CENTER DRIVE, SUITE 500
MIAMI, FLORIDA 33126
PHONE: (786) 464-1000 FAX: (786) 845-7119
CERTIFICATE OF AUTHORIZATION NO. 1838

Approved | Date

H.J. ROSS
201 ALHAMBRA CIRCLE SUITE 900
CORAL GABLES, FLORIDA 33134
PHONE: (305) 567-1688 / FAX: (305) 567-1771
407

Approved | Date 05-05-06

$DATE$ $TIME$ $FILE$

PLUMBING

NW 183RD ST. STATION PLUMBING SITE PLAN

Scale 1" = 100' | Drawing PL-19 | Sheet 264

G:\550515 No...\Corridor\NW 183 ST\Mech\Plbg\SHTPL-19.dwg, 5/12/2006 3:24:31 PM, blindhol

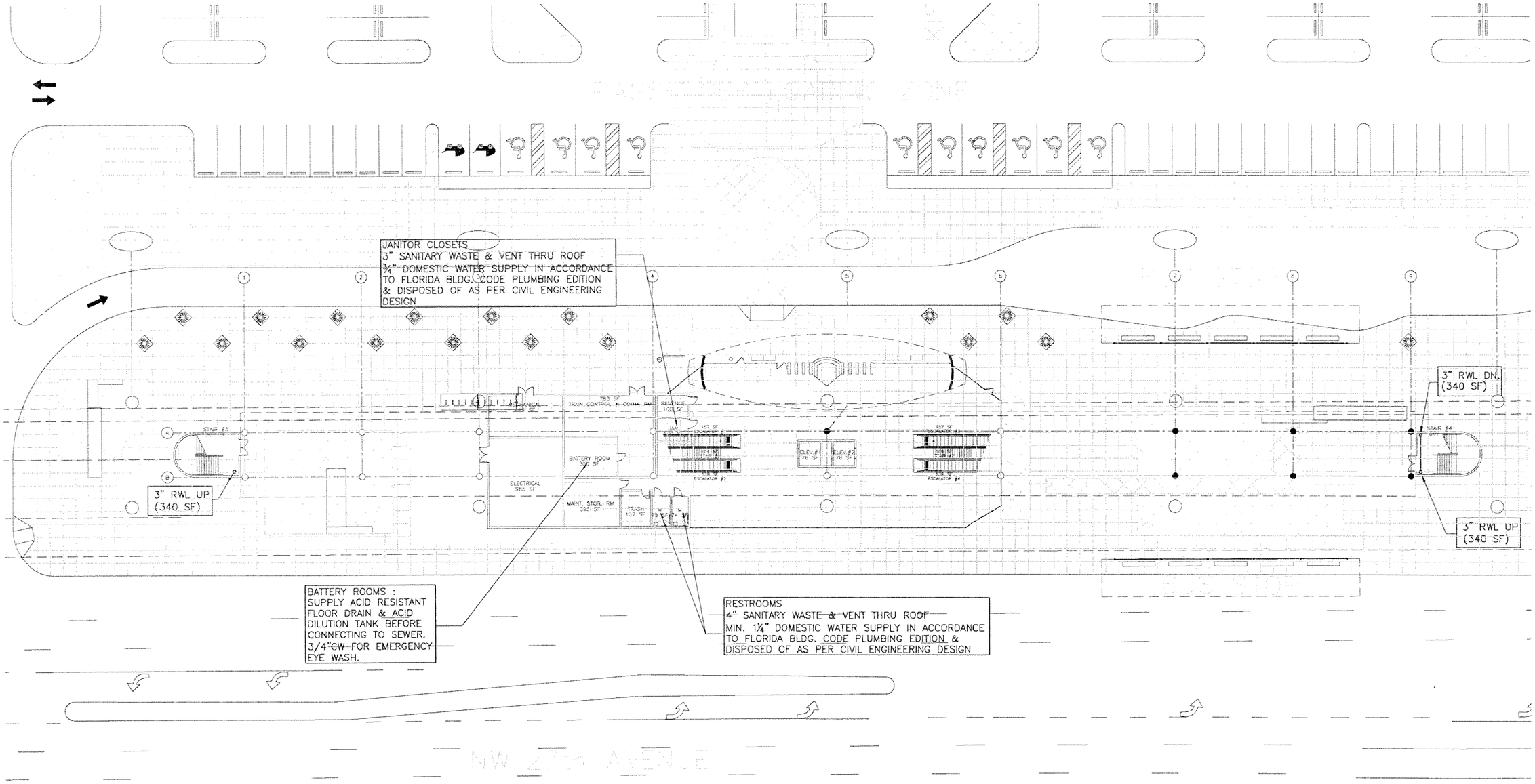

PLUMBING NOTES:

1. ALL WASTE, VENT AND STORM DRAIN PIPING SHALL BE INSTALED IN STRICT ACCORDANCE WITH THE FLORIDA BUILDING CODE, PLUMBING DIVISION.
2. ALL DOMESTIC WATER PIPING SHALL BE SIZED AND INSTALLED AS PER THE STATE OF FLORIDA BUILDING CODE, PLUMBING DIVISION.

0 10 20 40

SUBJECT TO CHANGE

Designed by E.B. Date						
Drawn by A.M. Date						
Checked by E.B. Date						
Approved by G.V. Date	No.	Date	By / Chk	App.	Revisions	

NORTH CORRIDOR METRORAIL EXTENSION - PRELIMINARY ENGINEERING (100% SUBMITTAL)

MIAMI-DADE COUNTY

MIAMI-DADE TRANSIT

PARSONS
7600 CORPORATE CENTER DRIVE, SUITE 500
MIAMI, FLORIDA 33126
PHONE: (786) 464-1000 FAX: (786) 845-7119
CERTIFICATE OF AUTHORIZATION NO. 1838

H.J. ROSS
201 ALHAMBRA CIRCLE SUITE 900
CORAL GABLES, FLORIDA 33134
PHONE: (305) 567-1888 / FAX: (305) 567-1771
407

Approved | Date | Approved | Date 05-05-06

PLUMBING

NW 183RD ST. STATION
PLUMBING
PLAZA LEVEL PLAN

Scale 1" = 40' | Drawing PL-20 | Sheet 265

G:\550515 N... Corridor\NW 183 ST\Mech\Plbg\SHT\PL-20.dwg, 5/12/2006 3:24:36 PM, blindhol

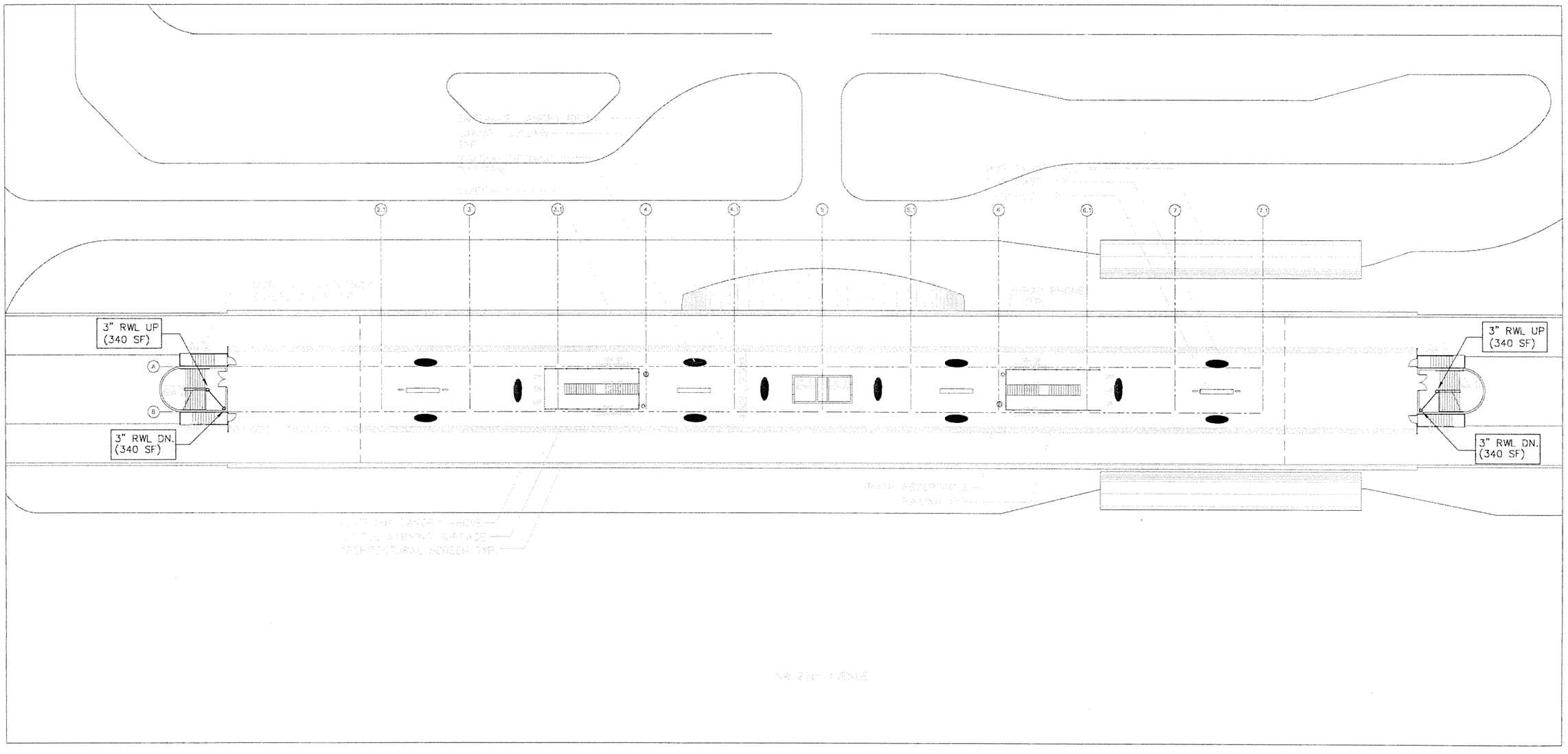

0 10 20 40

SUBJECT TO CHANGE

Designed by E.B. Date						NORTH CORRIDOR METRORAIL EXTENSION - PRELIMINARY ENGINEERING (100% SUBMITTAL)	PLUMBING
Drawn by A.M. Date						MIAMI-DADE COUNTY / MIAMI-DADE TRANSIT	PARSONS 7600 CORPORATE CENTER DRIVE, SUITE 500 MIAMI, FLORIDA 33126 PHONE: (786) 464-1000 FAX: (786) 845-7119 CERTIFICATE OF AUTHORIZATION NO. 1838
Checked by E.B. Date							H.J. ROSS 201 ALHAMBRA CIRCLE SUITE 900 CORAL GABLES, FLORIDA 33134 PHONE: (305) 567-1888 / FAX: (305) 567-1771 407
Approved by G.V. Date	No.	Date	By / Chk	App.	Revisions	Approved / Date	Approved / Date 05-05-06
						$DATE$	$TIME$ $FILE$

NW 183RD ST. STATION PLUMBING PLATFORM LEVEL PLAN

Scale 1" = 40' | Drawing PL-21 | Sheet 266

G:\550515 N Corridor\NW 183 ST\Mech\Plbg\SHT\PL-21.dwg, 5/12/2006 3:24:46 PM, blindhc

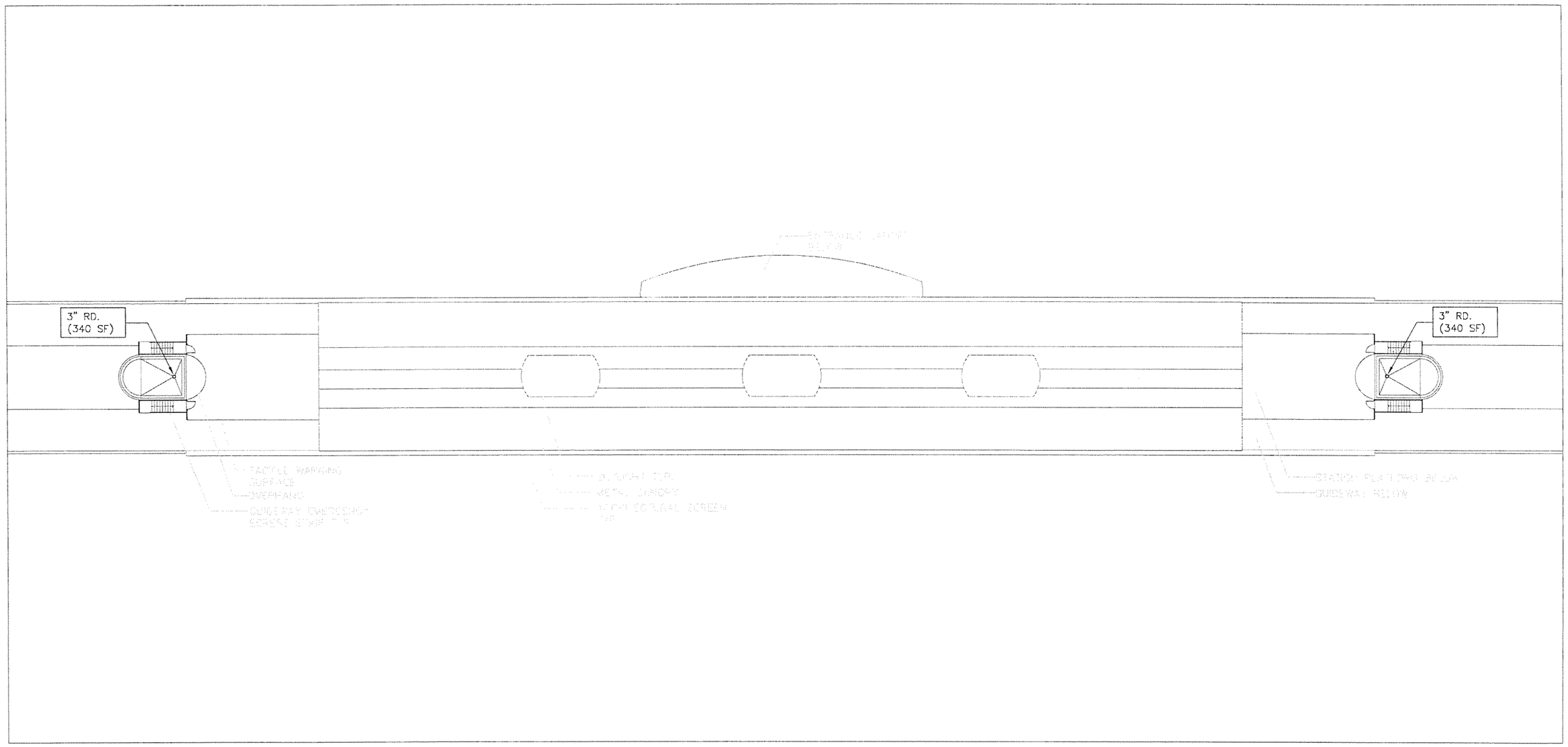

0 10 20 40

SUBJECT TO CHANGE

Designed by E.B. Date							
Drawn by A.M. Date							
Checked by E.B. Date							
Approved by G.V. Date	No.	Date	By / Chk	App.	Revisions		

NORTH CORRIDOR METRORAIL EXTENSION - PRELIMINARY ENGINEERING (100% SUBMITTAL)

MIAMI-DADE COUNTY

MIAMI-DADE TRANSIT

PARSONS
7600 CORPORATE CENTER DRIVE, SUITE 500
MIAMI, FLORIDA 33126
PHONE: (786) 464-1000 FAX: (786) 845-7119
CERTIFICATE OF AUTHORIZATION NO. 1838

Approved | Date

H.J. ROSS
201 ALHAMBRA CIRCLE SUITE 900
CORAL GABLES, FLORIDA 33134
PHONE: (305) 567-1888 / FAX: (305) 567-1771
407

Approved | Date 05-05-06

$DATE$ $TIME$ $FILE$

PLUMBING

NW 183RD ST. STATION
PLUMBING
ROOF PLAN

Scale 1"=40' | Drawing PL-22 | Sheet 267

G:\1550515 No... Corridor\NW 183 ST\Mech\Plbg\SHTPL-22.dwg, 5/12/2006 3:24:51 PM, blindhol

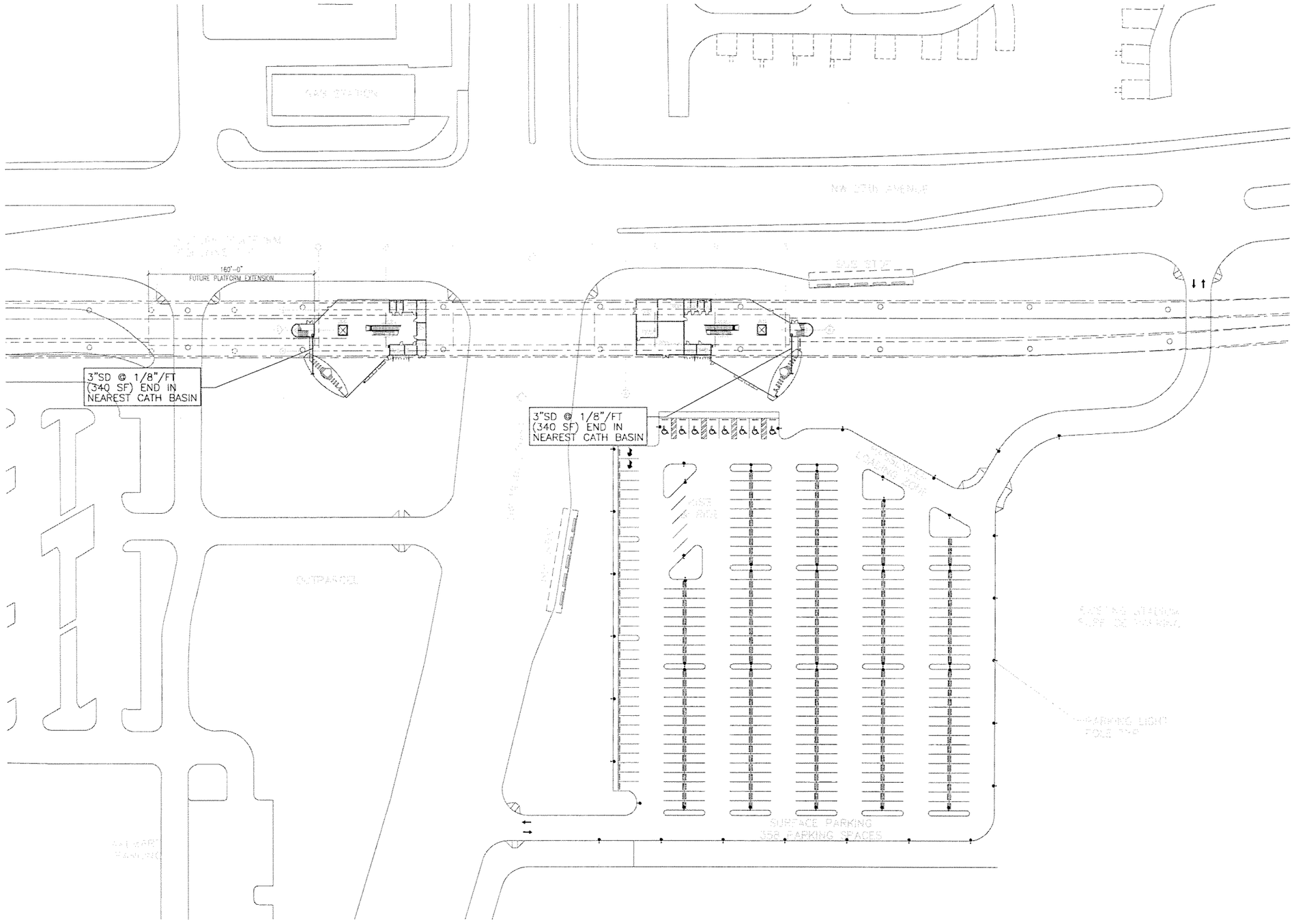

SUBJECT TO CHANGE

Designed by E.B. Date						
Drawn by A.M. Date						
Checked by E.B. Date						
Approved by G.V. Date	No.	Date	By / Chk	App.	Revisions	

NORTH CORRIDOR METRORAIL EXTENSION - PRELIMINARY ENGINEERING (100% SUBMITTAL)

MIAMI-DADE COUNTY

MIAMI-DADE TRANSIT

PARSONS
7600 CORPORATE CENTER DRIVE, SUITE 500
MIAMI, FLORIDA 33126
PHONE: (786) 464-1000 FAX: (786) 845-7119
CERTIFICATE OF AUTHORIZATION NO. 1838

Approved | Date

H.J. ROSS
201 ALHAMBRA CIRCLE SUITE 900
CORAL GABLES, FLORIDA 33134
PHONE: (305) 567-1888 / FAX: (305) 567-1771
407

Approved | Date 05-05-06

$DATE$ $TIME$ $FILE$

PLUMBING

NW 199TH ST. STATION PLUMBING SITE PLAN

Scale 1" = 100' | Drawing PL-23 | Sheet 268

G:\550515 N... Corridor\NW 199 STMech\Plbg\SHTPL-23.dwg, 5/12/2006 3:29:54 PM, blindho

RESTROOMS
4" SANITARY WASTE & VENT THRU ROOF
MIN. 1¼" DOMESTIC WATER SUPPLY IN ACCORDANCE TO FLORIDA BLDG. CODE PLUMBING EDITION & DISPOSED OF AS PER CIVIL ENGINEERING DESIGN

JANITOR CLOSETS
3" SANITARY WASTE & VENT THRU ROOF
¾" DOMESTIC WATER SUPPLY IN ACCORDANCE TO FLORIDA BLDG. CODE PLUMBING EDITION & DISPOSED OF AS PER CIVIL ENGINEERING DESIGN

)'-0"
ORM EXTENSION

3"RWL UP (340 SF)

BATTERY ROOMS :
SUPPLY ACID RESISTANT FLOOR DRAIN & ACID DILUTION TANK BEFORE CONNECTING TO SEWER. 3/4"CW FOR EMERGENCY EYE WASH.

PLUMBING NOTES:

1. ALL WASTE, VENT AND STORM DRAIN PIPING SHALL BE INSTALED IN STRICT ACCORDANCE WITH THE FLORIDA BUILDING CODE, PLUMBING DIVISION.
2. ALL DOMESTIC WATER PIPING SHALL BE SIZED AND INSTALLED AS PER THE STATE OF FLORIDA BUILDING CODE, PLUMBING DIVISION.

RESTROOMS
4" SANITARY WASTE & VENT THRU ROOF
MIN. 1¼" DOMESTIC WATER SUPPLY IN ACCORDANCE TO FLORIDA BLDG. CODE PLUMBING EDITION & DISPOSED OF AS PER CIVIL ENGINEERING DESIGN

3"RWL UP (340 SF)

SURFACE PARKING 349 PARKING SPACES

0 10 20 40

SUBJECT TO CHANGE

Designed by E.B. Date							
Drawn by A.M. Date							
Checked by E.B. Date							
Approved by G.V. Date	No.	Date	By / Chk	App.	Revisions		

NORTH CORRIDOR METRORAIL EXTENSION - PRELIMINARY ENGINEERING (100% SUBMITTAL)

MIAMI-DADE COUNTY

MIAMI-DADE TRANSIT

PARSONS
7600 CORPORATE CENTER DRIVE, SUITE 500
MIAMI, FLORIDA 33126
PHONE: (786) 464-1000 FAX: (786) 845-7119
CERTIFICATE OF AUTHORIZATION NO. 1838

H.J. ROSS
201 ALHAMBRA CIRCLE SUITE 900
CORAL GABLES, FLORIDA 33134
PHONE: (305) 567-1888 / FAX: (305) 567-1771
407

PLUMBING

NW 199TH ST. STATION
PLUMBING
PLAZA LEVEL PLAN

Approved	Date	Approved	Date	Scale	Drawing	Sheet
			05-05-06	1:1 = 40'	PL-24	269

$DATE$ $TIME$ $FILE$

G:\550515 N...Corridor\NW 199 ST\Mech\Plbg\SHT\PL-24.dwg, 5/12/2006 3:30:04 PM, blindho...

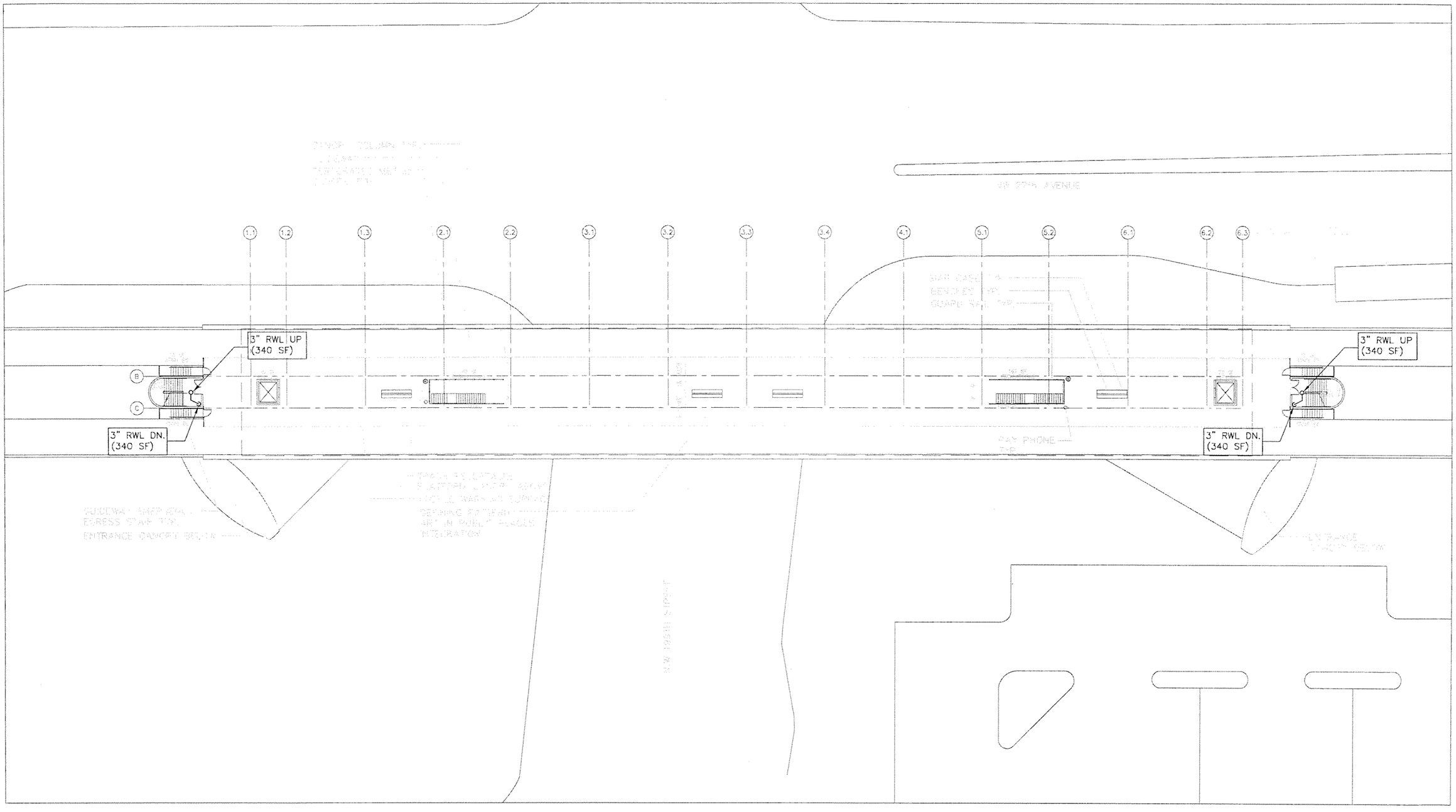

SUBJECT TO CHANGE

Designed by E.B. Date						
Drawn by A.M. Date						
Checked by E.B. Date						
Approved by G.V. Date	No.	Date	By / Chk	App.	Revisions	

NORTH CORRIDOR METRORAIL EXTENSION - PRELIMINARY ENGINEERING (100% SUBMITTAL)

MIAMI-DADE COUNTY

MIAMI-DADE TRANSIT

PARSONS
7600 CORPORATE CENTER DRIVE, SUITE 500
MIAMI, FLORIDA 33126
PHONE: (786) 464-1000 FAX: (786) 845-7119
CERTIFICATE OF AUTHORIZATION NO. 1838

Approved | Date

H.J. ROSS
201 ALHAMBRA CIRCLE SUITE 900
CORAL GABLES, FLORIDA 33134
PHONE: (305) 567-1888 / FAX: (305) 567-1771
407

Approved | Date 05-05-06

$DATE$ $TIME$ $FILE$

PLUMBING

NW 199TH ST. STATION PLUMBING PLAFORM LEVEL PLAN

Scale 1"=10' | Drawing PL-25 | Sheet 270

G:\550515 N...Corridor\NW 199 ST\Mech\Plbg\SHT\PL-25.dwg, 5/12/2006 3:30:13 PM, blindho

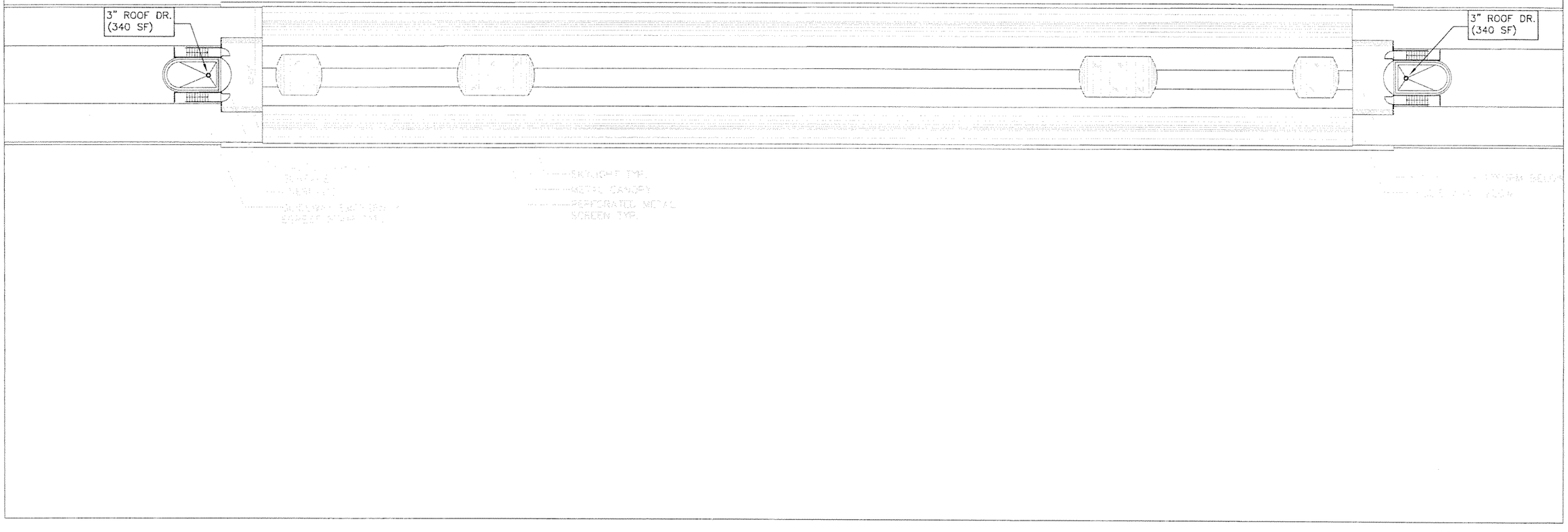

0 10 20 40

SUBJECT TO CHANGE

Designed by E.B. Date					
Drawn by A.M. Date					
Checked by E.B. Date					
Approved by G.V. Date	No.	Date	By / Chk	App.	Revisions

NORTH CORRIDOR METRORAIL EXTENSION - PRELIMINARY ENGINEERING (100% SUBMITTAL)

MIAMI-DADE COUNTY

MIAMI-DADE TRANSIT

PARSONS
7600 CORPORATE CENTER DRIVE, SUITE 500
MIAMI, FLORIDA 33126
PHONE: (786) 464-1000 FAX: (786) 845-7119
CERTIFICATE OF AUTHORIZATION NO. 1838

Approved | Date

H.J. ROSS
201 ALHAMBRA CIRCLE SUITE 900
CORAL GABLES, FLORIDA 33134
PHONE: (305) 567-1888 / FAX: (305) 567-1771
407

Approved | Date 05-05-06

PLUMBING

NW 199TH ST. STATION PLUMBING ROOF PLAN

Scale 1" = 40' | Drawing PL-26 | Sheet 27

G:\550515 N... Corridor\NW 199 STMech\Plbg\SHTPL-26.dwg, 5/12/2006 3:30:22 PM, blindho...

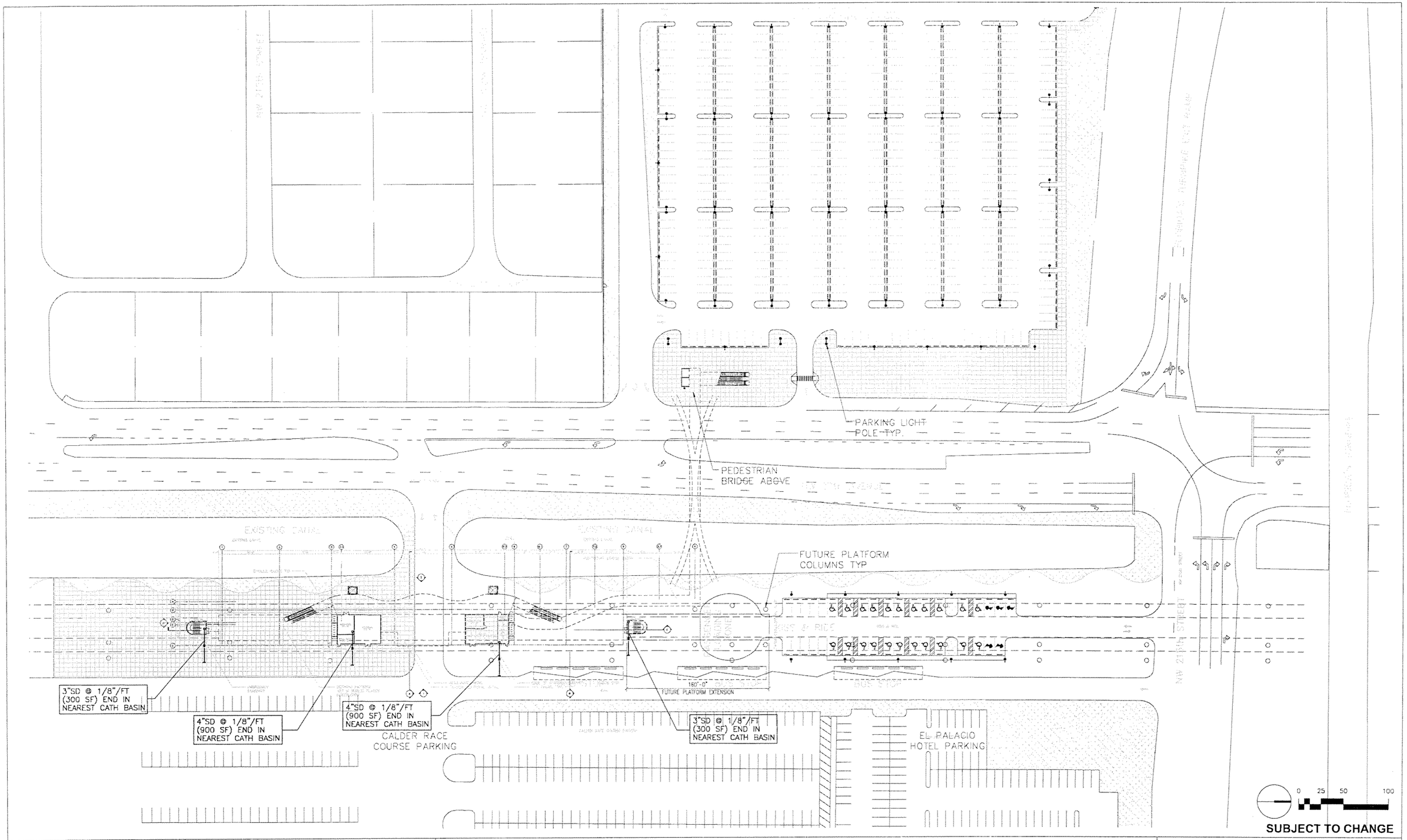

G:\550515 Nor... rridor\NW 215 ST\Mech\Plbg\SHT\PL-27.dwg, 5/12/2006 3:44:22 PM, blindholm

Designed by E.B.	Date					
Drawn by A.M.	Date					
Checked by E.B.	Date					
Approved by G.V.	Date	No.	Date	By / Chk	App.	Revisions

NORTH CORRIDOR METRORAIL EXTENSION - PRELIMINARY ENGINEERING (100% SUBMITTAL)

MIAMI-DADE COUNTY

MIAMI-DADE TRANSIT

PARSONS
7600 CORPORATE CENTER DRIVE, SUITE 500
MIAMI, FLORIDA 33126
PHONE: (786) 464-1000 FAX: (786) 845-7119
CERTIFICATE OF AUTHORIZATION NO. 1838

H.J. ROSS
201 ALHAMBRA CIRCLE SUITE 900
CORAL GABLES, FLORIDA 33134
PHONE: (305) 567-1888 / FAX: (305) 567-1771
407

Approved | Date | Approved | Date 05-05-06

PLUMBING

NW 215TH ST. STATION
PLUMBING
SITE PLAN

Scale 1"=100' | Drawing PL-27 | Sheet 272

NO PLUMBING WORK INDICATED
FOR THIS AREA FOR THIS SUBMITTAL.

0 25 50 100

SUBJECT TO CHANGE

G:\550515 No...rridor\NW 215 ST\Mech\Plbg\SHT\PL-28.dwg, 5/12/2006 3:44:33 PM, blindholm

Designed by E.B. Date						NORTH CORRIDOR METRORAIL EXTENSION - PRELIMINARY ENGINEERING (100% SUBMITTAL)	PLUMBING
Drawn by XX Date							
Checked by E.B. Date							
Approved by G.V. Date	No.	Date	By / Chk	App.	Revisions	MIAMI-DADE COUNTY / MIAMI-DADE TRANSIT	NW 215TH ST. STATION PLUMBING SITE PLAN-cont'd

PARSONS
7600 CORPORATE CENTER DRIVE, SUITE 500
MIAMI, FLORIDA 33126
PHONE: (786) 464-1000 FAX: (786) 845-7119
CERTIFICATE OF AUTHORIZATION NO. 1838

H.J. ROSS
201 ALHAMBRA CIRCLE SUITE 900
CORAL GABLES, FLORIDA 33134
PHONE: (305) 567-1888 / FAX: (305) 567-1771
407

Approved	Date	Approved	Date	Scale	Drawing	Sheet
			05-05-06	1"=100'	PL-28	273

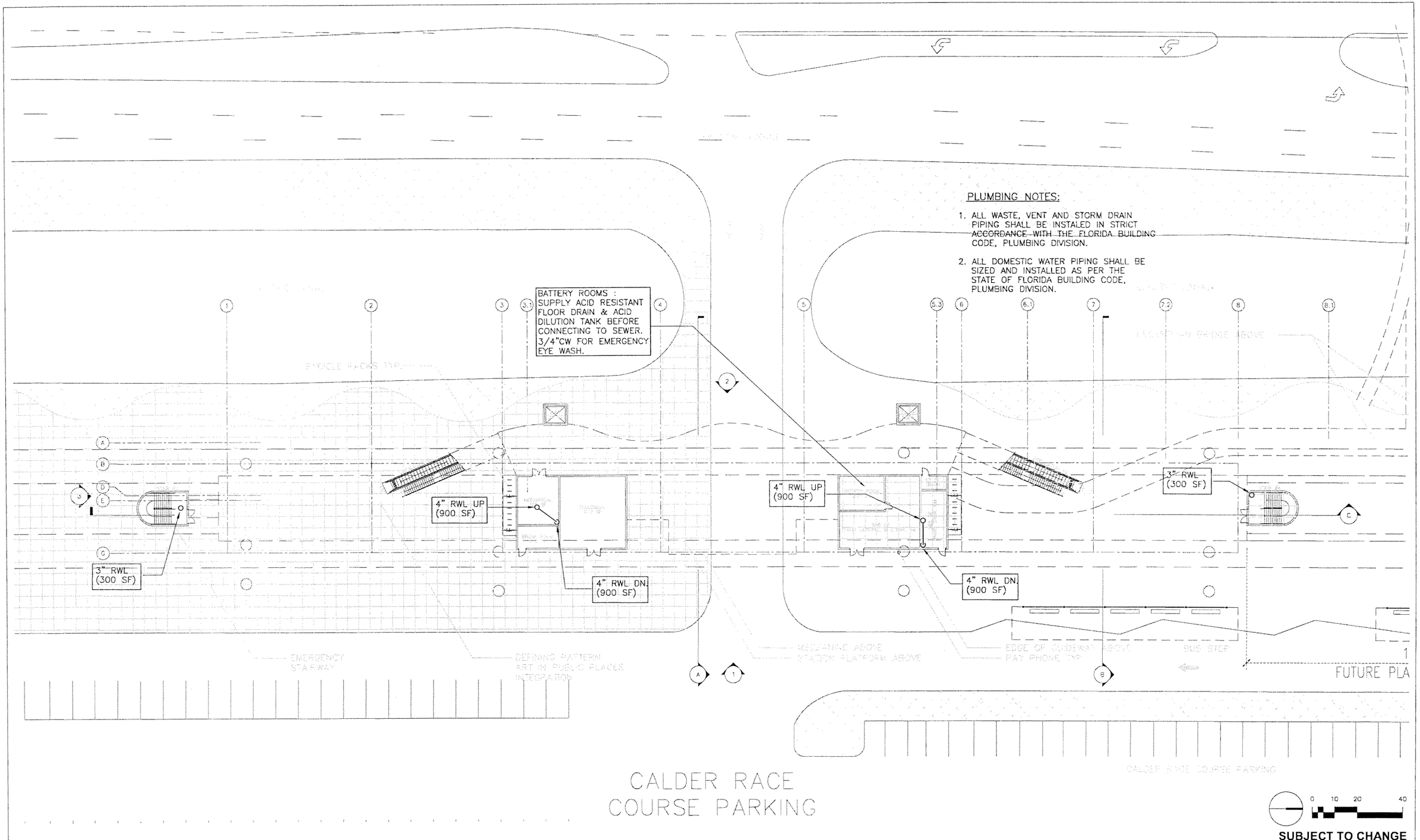

PLUMBING NOTES:

1. ALL WASTE, VENT AND STORM DRAIN PIPING SHALL BE INSTALED IN STRICT ACCORDANCE WITH THE FLORIDA BUILDING CODE, PLUMBING DIVISION.
2. ALL DOMESTIC WATER PIPING SHALL BE SIZED AND INSTALLED AS PER THE STATE OF FLORIDA BUILDING CODE, PLUMBING DIVISION.

SUBJECT TO CHANGE

G:\550515 Nort... rridor\NW 215 ST\Mech\Plbg\SHT\PL-29.dwg, 5/12/2006 3:44:42 PM, blindholm

Designed by E.B.	Date					
Drawn by A.M.	Date					
Checked by E.B.	Date					
Approved by G.V.	Date	No.	Date	By / Chk	App.	Revisions

NORTH CORRIDOR METRORAIL EXTENSION - PRELIMINARY ENGINEERING (100% SUBMITTAL)

MIAMI-DADE COUNTY

MIAMI-DADE TRANSIT

PARSONS
7600 CORPORATE CENTER DRIVE, SUITE 500
MIAMI, FLORIDA 33126
PHONE: (786) 464-1000 FAX: (786) 845-7119
CERTIFICATE OF AUTHORIZATION NO. 1838

H.J. ROSS
201 ALHAMBRA CIRCLE SUITE 900
CORAL GABLES, FLORIDA 33134
PHONE: (305) 567-1888 / FAX: (305) 567-1771
407

PLUMBING

NW 215TH ST. STATION
PLUMBING
PLAZA LEVEL PLAN

Approved | Date | Approved | Date 05-05-06 | Scale 1"=40' | Drawing PL-29 | Sheet 274

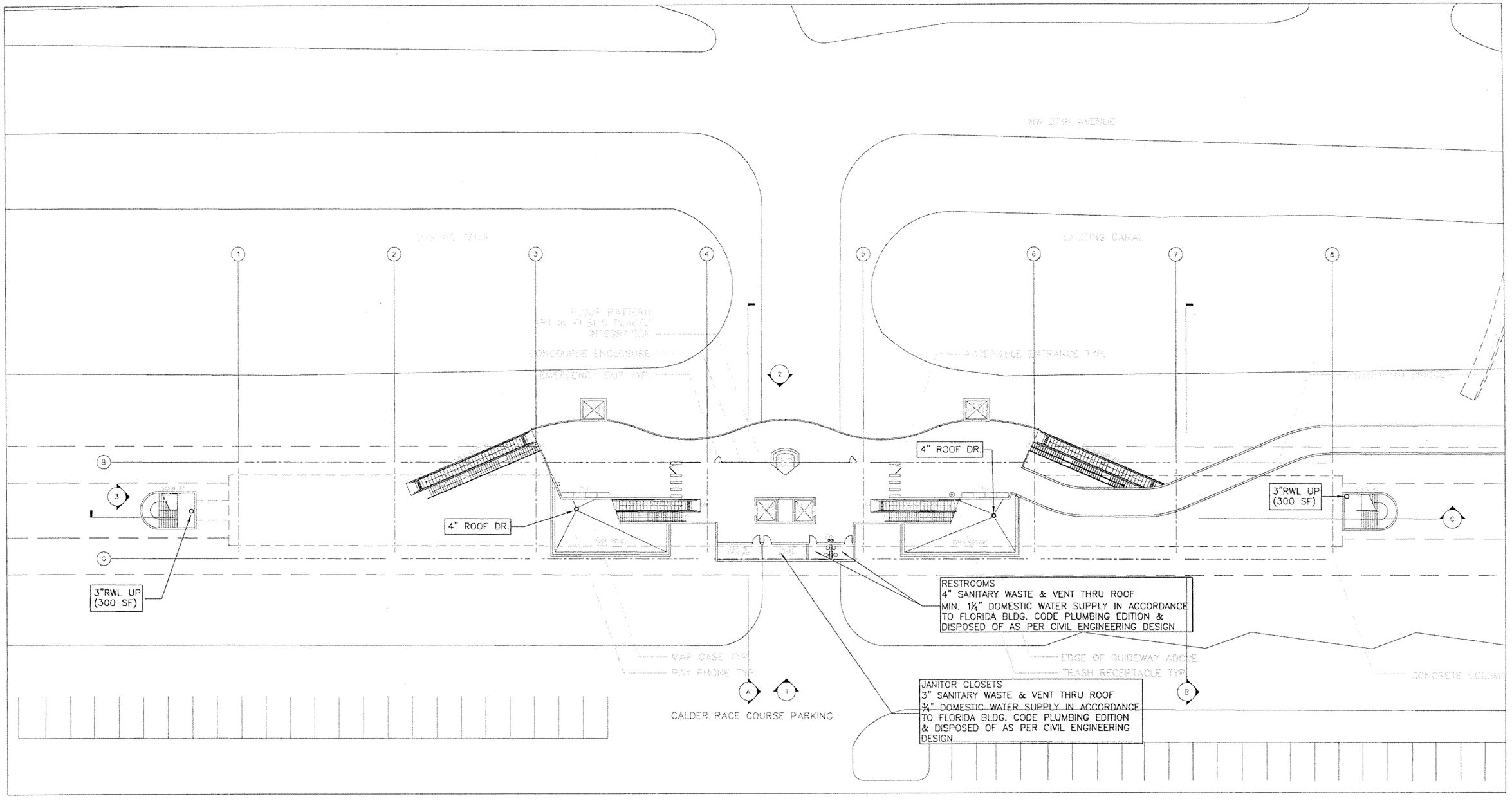

SUBJECT TO CHANGE

Designed by E.B. Date							
Drawn by A.M. Date							
Checked by E.B. Date							
Approved by G.V. Date	No.	Date	By / Chk	App.	Revisions		

NORTH CORRIDOR METRORAIL EXTENSION - PRELIMINARY ENGINEERING (100% SUBMITTAL)

MIAMI-DADE COUNTY

MIAMI-DADE TRANSIT

PARSONS
7600 CORPORATE CENTER DRIVE, SUITE 500
MIAMI, FLORIDA 33126
PHONE: (786) 464-1000 FAX: (786) 845-7119
CERTIFICATE OF AUTHORIZATION NO. 1638

H.J. ROSS
201 ALHAMBRA CIRCLE SUITE 900
CORAL GABLES, FLORIDA 33134
PHONE: (305) 567-1888 / FAX: (305) 567-1771
407

Approved | Date | Approved | Date 05-05-06

PLUMBING

NW 215TH ST. STATION PLUMBING MEZZANINE FLOOR PLAN

Scale 1"=40' | Drawing PL-30 | Sheet 275

G:\550515 Nor... ...orridor\NW 215 ST\Mech\Plbg\SHT\PL-30.dwg, 5/12/2006 3:44:51 PM, blindholm

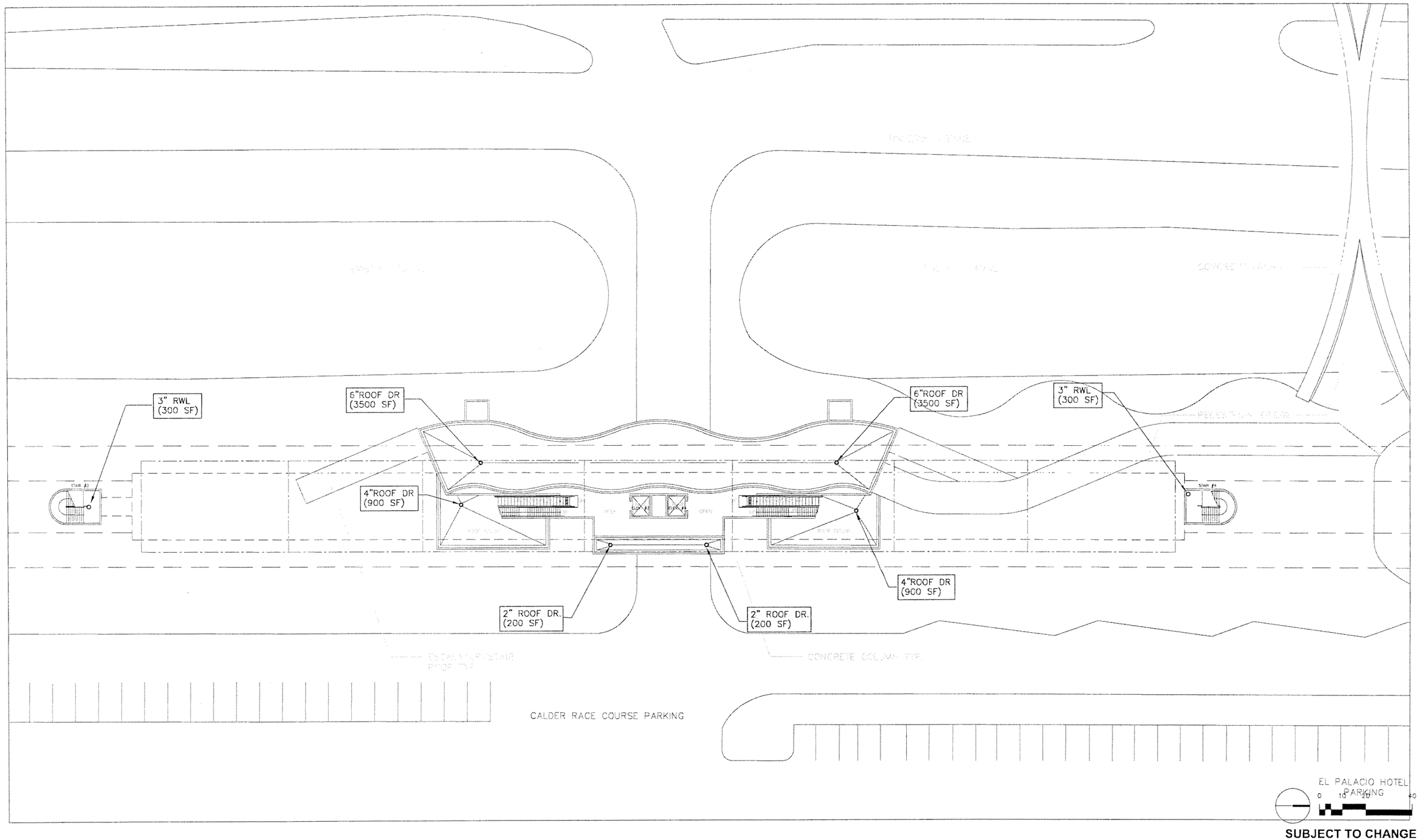

SUBJECT TO CHANGE

G:\550515 Nor...orridor\NW 215 ST\Mech\Plbg\SHT\PL-32.dwg, 5/12/2006 3:45:00 PM, blindholm

Designed by E.B. Date							
Drawn by A.M. Date							
Checked by E.B. Date							
Approved by G.V. Date	No.	Date	By Chk	App.	Revisions		

NORTH CORRIDOR METRORAIL EXTENSION - PRELIMINARY ENGINEERING (100% SUBMITTAL)

MIAMI-DADE COUNTY

MIAMI-DADE TRANSIT

PARSONS
7600 CORPORATE CENTER DRIVE, SUITE 500
MIAMI, FLORIDA 33126
PHONE: (786) 464-1000 FAX: (786) 845-7119
CERTIFICATE OF AUTHORIZATION NO. 1838

Approved | Date

H.J. ROSS
201 ALHAMBRA CIRCLE SUITE 900
CORAL GABLES, FLORIDA 33134
PHONE: (305) 567-1888 / FAX: (305) 567-1771
407

Approved | Date 05-05-06

PLUMBING

NW 215TH ST. STATION PLUMBING PLATFORM PLAN

Scale 1"=40' | Drawing PL-31 | Sheet 276

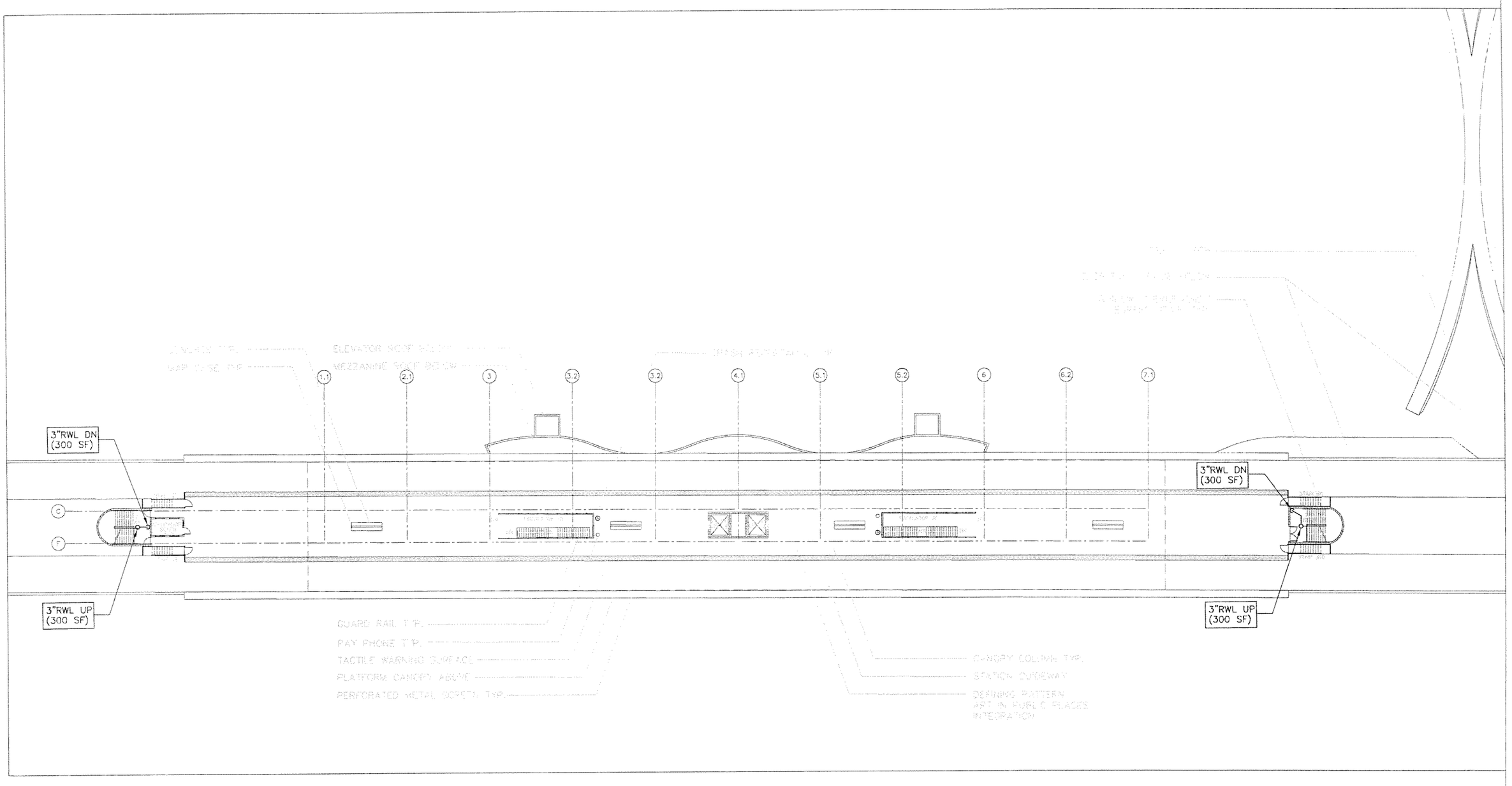

0 10 20 40

SUBJECT TO CHANGE

Designed by E.B. Date						
Drawn by A.M. Date						
Checked by E.B. Date						
Approved by G.V. Date	No.	Date	By / Chk	App.	Revisions	

NORTH CORRIDOR METRORAIL EXTENSION - PRELIMINARY ENGINEERING (100% SUBMITTAL)

MIAMI-DADE COUNTY

MIAMI-DADE TRANSIT

PARSONS
7600 CORPORATE CENTER DRIVE, SUITE 500
MIAMI, FLORIDA 33126
PHONE: (786) 464-1000 FAX: (786) 845-7119
CERTIFICATE OF AUTHORIZATION NO. 1838

H.J. ROSS
201 ALHAMBRA CIRCLE SUITE 900
CORAL GABLES, FLORIDA 33134
PHONE: (305) 567-1888 / FAX: (305) 567-1771
407

Approved | Date | Approved | Date 05-05-06

PLUMBING

NW 215TH ST. STATION PLUMBING MEZZANINE ROOF PLAN

Scale 1" = 40' | Drawing PL-32 | Sheet 27

G:\550515 Nor...rridor\NW 215 ST\Mech\Plbg\SHT\PL-31.dwg, 5/12/2006 3:44:55 PM, blindholm

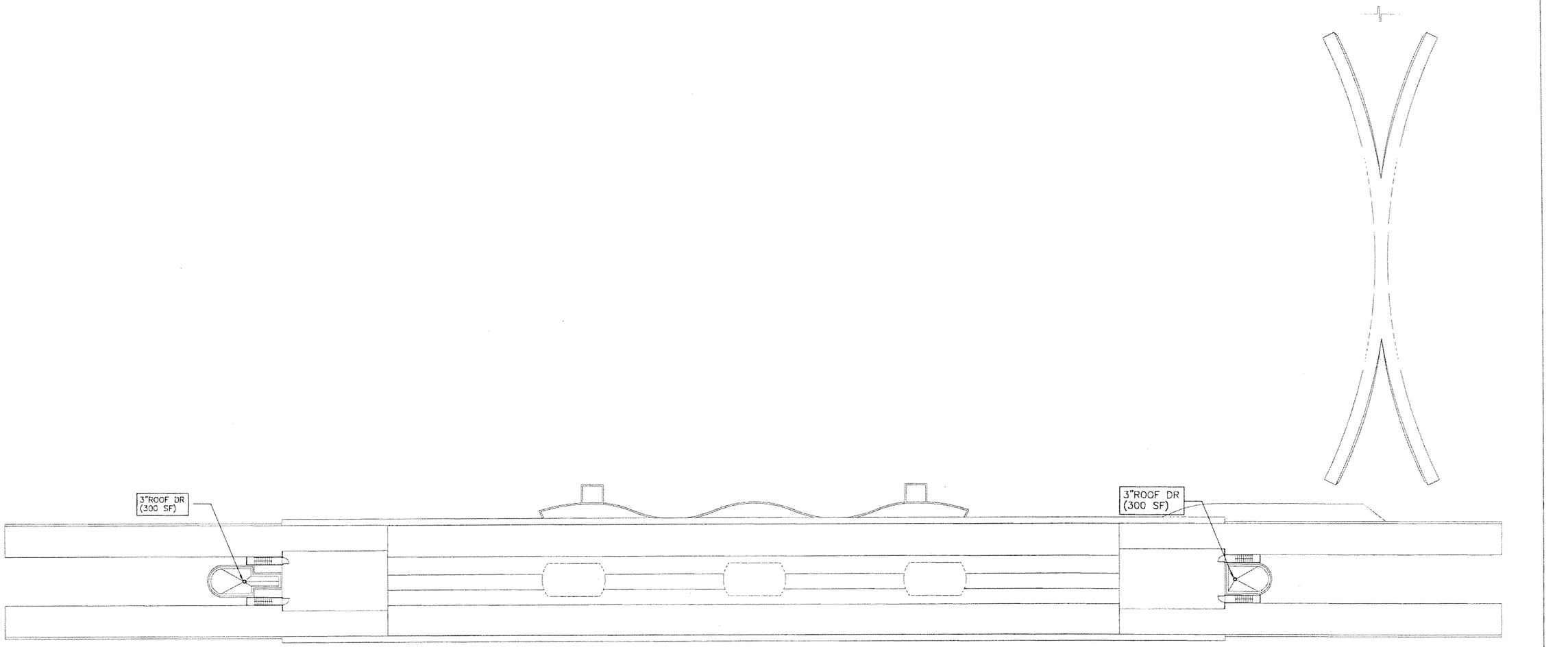

0 10 20 40

SUBJECT TO CHANGE

G:\550515 Nor...rridor\NW 215 ST\Mech\Plbg\SHT\PL-33.dwg, 5/12/2006 3:45:05 PM, blindholm

Designed by E.B. Date							
Drawn by A.M. Date							
Checked by E.B. Date							
Approved by G.V. Date	No.	Date	By	App.	Revisions		

NORTH CORRIDOR METRORAIL EXTENSION - PRELIMINARY ENGINEERING (100% SUBMITTAL)

MIAMI-DADE COUNTY

MIAMI-DADE TRANSIT

PARSONS
7600 CORPORATE CENTER DRIVE, SUITE 500
MIAMI, FLORIDA 33126
PHONE: (786) 464-1000 FAX: (786) 845-7119
CERTIFICATE OF AUTHORIZATION NO. 1838

Approved | Date

H.J. ROSS
201 ALHAMBRA CIRCLE SUITE 900
CORAL GABLES, FLORIDA 33134
PHONE: (305) 567-1888 / FAX: (305) 567-1771
407

Approved | Date 05-05-06

PLUMBING

NW 215TH ST. STATION PLUMBING ROOF PLAN

Scale 1" = 40' | Drawing PL-33 | Sheet 276

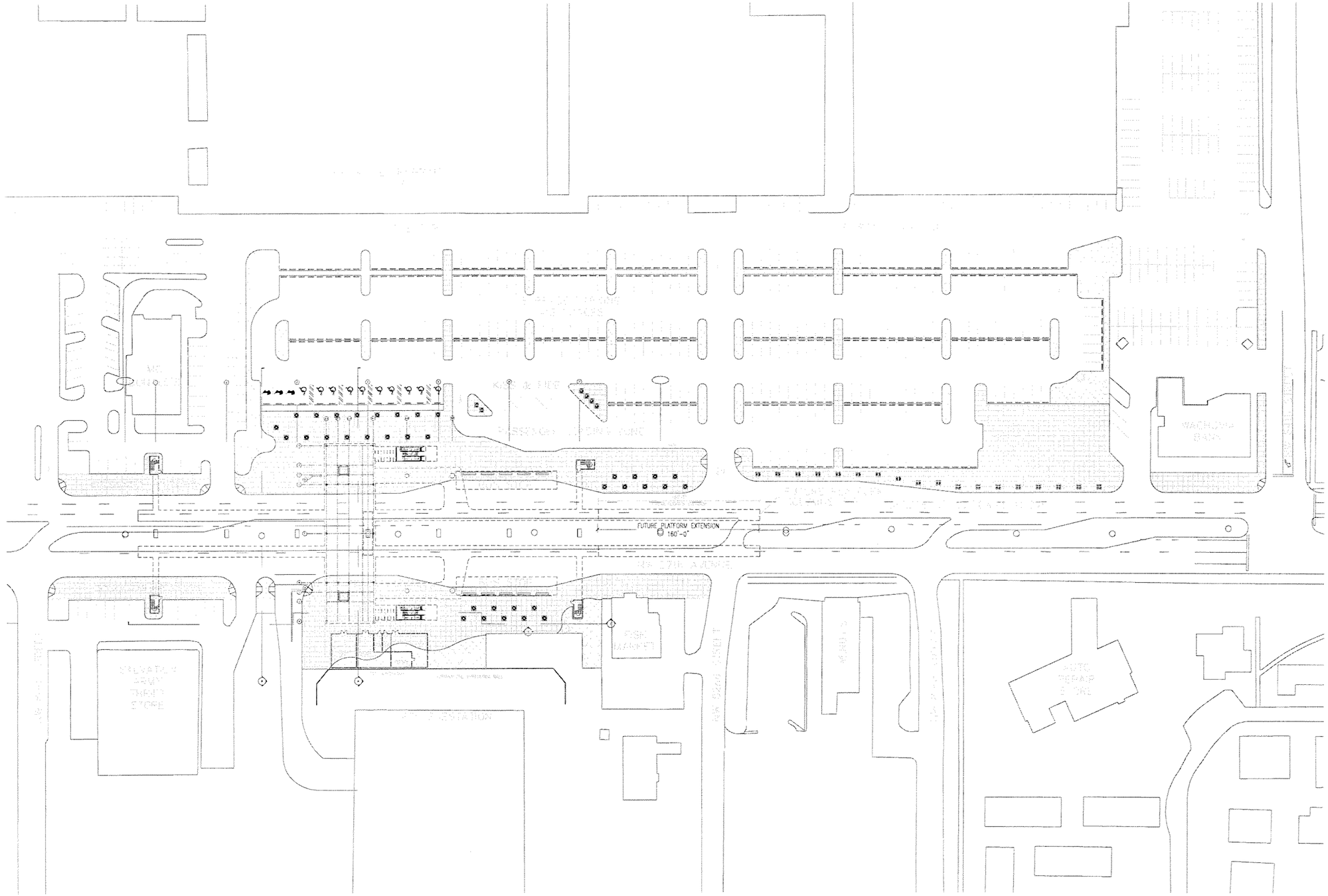

NO FIRE PROTECTION WORK DONE ON THIS SHEET FOR THIS SUBMITTAL.

0 25 50 100

SUBJECT TO CHANGE

Designed by E.B. Date						
Drawn by XX Date						
Checked by E.B. Date						
Approved by G.V. Date	No.	Date	By / Chk	App.	Revisions	

NORTH CORRIDOR METRORAIL EXTENSION - PRELIMINARY ENGINEERING (100% SUBMITTAL)

MIAMI-DADE COUNTY

MIAMI-DADE TRANSIT

PARSONS
7600 CORPORATE CENTER DRIVE, SUITE 500
MIAMI, FLORIDA 33126
PHONE: (786) 464-1000 FAX: (786) 845-7119
CERTIFICATE OF AUTHORIZATION NO. 1838

H.J. ROSS
201 ALHAMBRA CIRCLE SUITE 900
CORAL GABLES, FLORIDA 33134
PHONE: (305) 567-1888 / FAX: (305) 567-1771
407

Approved	Date	Approved	Date
STATE	STATE	STATE	05-05-06

FIRE PROTECTION

NW 82ND ST. STATION
FIRE PROTECTION
SITE PLAN

Scale 1"=100' Drawing FP-01 Sheet 279

G:\550515 NC Corridor\NW 82 ST\Mech\Pro\SHT\FP-01.dwg, 5/12/2006 1:58:48 PM, blindholn

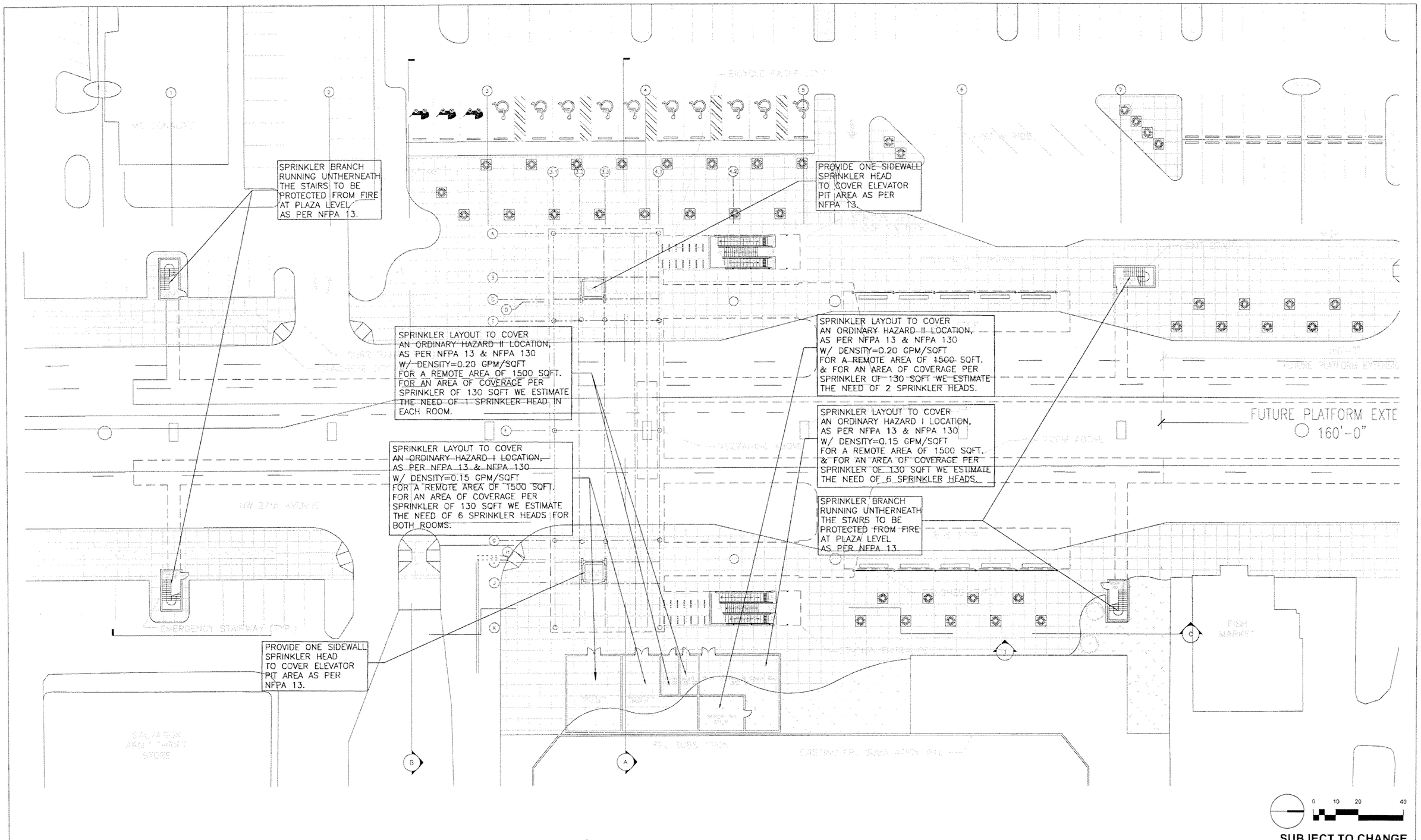

SUBJECT TO CHANGE

Designed by E.B.	Date					
Drawn by XX	Date					
Checked by E.B.	Date					
Approved by G.V.	Date	No.	Date	By / Chk	App.	Revisions

NORTH CORRIDOR METRORAIL EXTENSION - PRELIMINARY ENGINEERING (100% SUBMITTAL)

MIAMI-DADE COUNTY

MIAMI-DADE TRANSIT

PARSONS
7600 CORPORATE CENTER DRIVE, SUITE 500
MIAMI, FLORIDA 33126
PHONE: (786) 464-1000 FAX: (786) 845-7119
CERTIFICATE OF AUTHORIZATION NO. 1838

H.J. ROSS
201 ALHAMBRA CIRCLE SUITE 900
CORAL GABLES, FLORIDA 33134
PHONE: (305) 567-1888 / FAX: (305) 567-1771
407

Approved | Date | Approved | Date 05-05-06

FIRE PROTECTION

NW 82ND ST. STATION
FIRE PROTECTION
PLAZA LEVEL PLAN

Scale 1"=40' | Drawing FP-02 | Sheet 280

G:\550515 NC Corridor\NW 82 ST\Mech\Fpro\SHT\FP-02.dwg, 5/12/2006 1:58:53 PM, blindholm

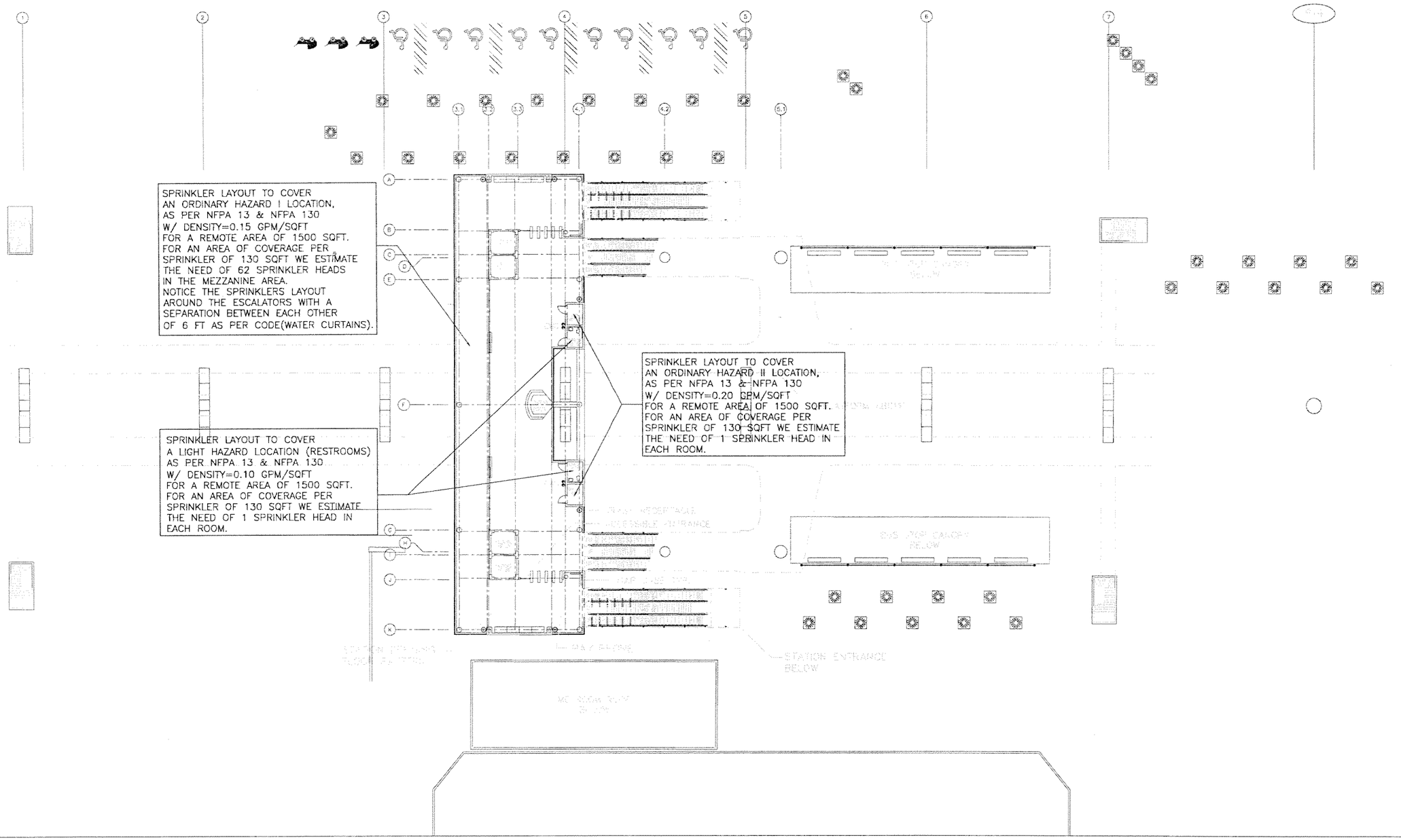

0 10 20 40

SUBJECT TO CHANGE

Designed by E.B. Date						
Drawn by XX Date						
Checked by E.B. Date						
Approved by G.V. Date	No.	Date	By / Chk	App.	Revisions	

NORTH CORRIDOR METRORAIL EXTENSION - PRELIMINARY ENGINEERING (100% SUBMITTAL)

FIRE PROTECTION

MIAMI-DADE COUNTY

MIAMI-DADE TRANSIT

PARSONS
7600 CORPORATE CENTER DRIVE, SUITE 500
MIAMI, FLORIDA 33126
PHONE: (786) 464-1000 FAX: (786) 845-7119
CERTIFICATE OF AUTHORIZATION NO. 1838

H.J. ROSS
201 ALHAMBRA CIRCLE SUITE 900
CORAL GABLES, FLORIDA 33134
PHONE: (305) 567-1888 / FAX: (305) 567-1771
407

Approved	Date	Approved	Date	Scale	Drawing	Sheet
$DATE$			05-05-06 $TIME$ $TITLE$	1" = 40'	FP-03	281

NW 82ND ST. STATION FIRE PROTECTION MEZZANINE LEVEL PLAN

G:\550515 No... Corridor\NW 82 ST\Mech\Fpro\SHT\FP-03.dwg, 5/12/2006 1:58:58 PM, blindholm

G:\550515 No... Corridor\NW 82 ST\Mech\Fpro\SHTFP-04.dwg, 5/12/2006 1:59:02 PM, blindholm

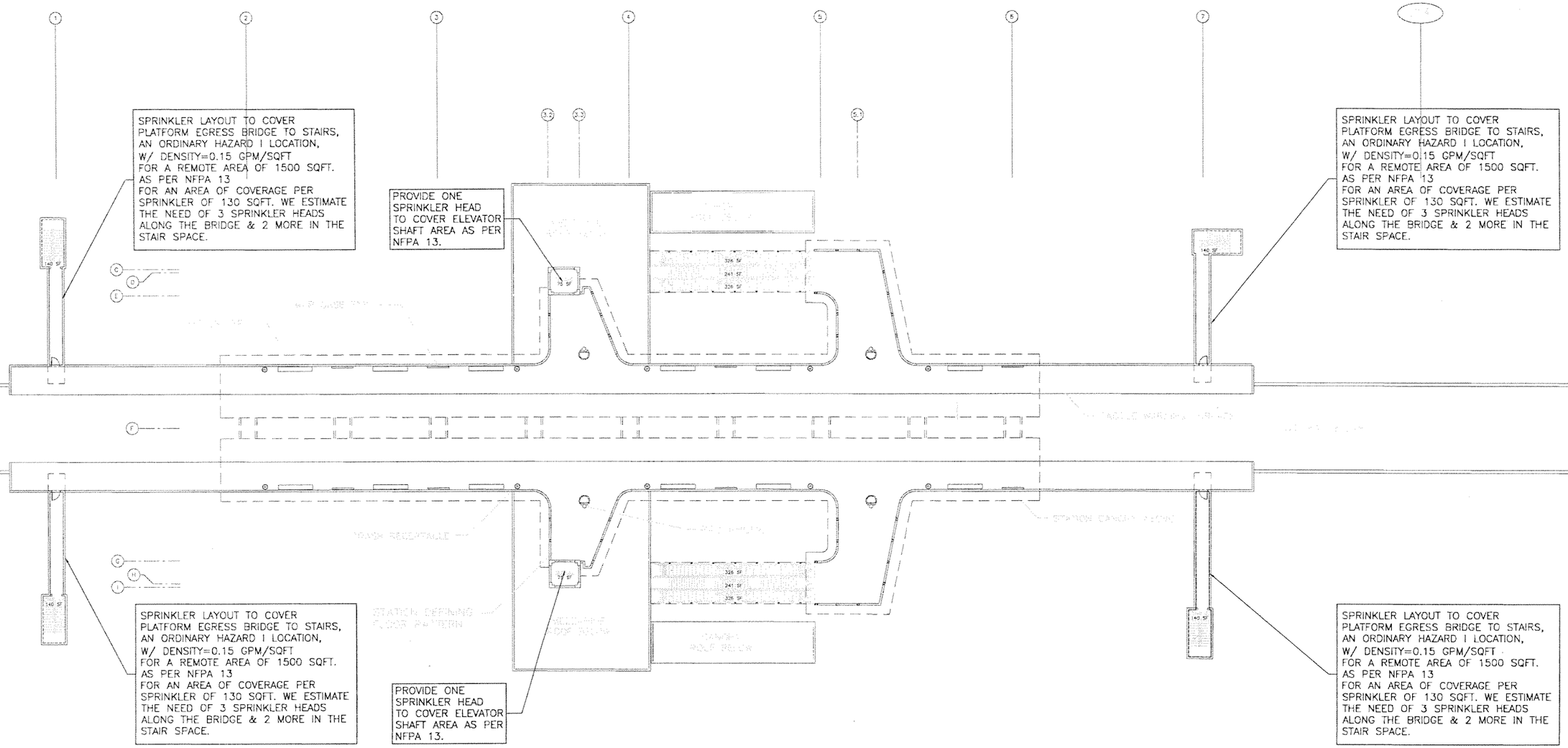

0 10 20 40

SUBJECT TO CHANGE

Designed by E.B. Date							
Drawn by XX Date							
Checked by E.B. Date							
Approved by G.V. Date	No.	Date	By / Chk	App.	Revisions		

NORTH CORRIDOR METRORAIL EXTENSION - PRELIMINARY ENGINEERING (100% SUBMITTAL)

MIAMI-DADE COUNTY

MIAMI-DADE TRANSIT

PARSONS
7600 CORPORATE CENTER DRIVE, SUITE 500
MIAMI, FLORIDA 33126
PHONE: (786) 464-1000 FAX: (786) 845-7119
CERTIFICATE OF AUTHORIZATION NO. 1838

Approved | Date

H.J. ROSS
201 ALHAMBRA CIRCLE SUITE 900
CORAL GABLES, FLORIDA 33134
PHONE: (305) 567-1888 / FAX: (305) 567-1771
407

Approved | Date 05-05-06

$DATE$ $TIME$ $FILE$

FIRE PROTECTION

NW 82ND ST. STATION
FIRE PROTECTION
PLATFORM LEVEL PLAN

Scale 1"=10' | Drawing FP-04 | Sheet 262

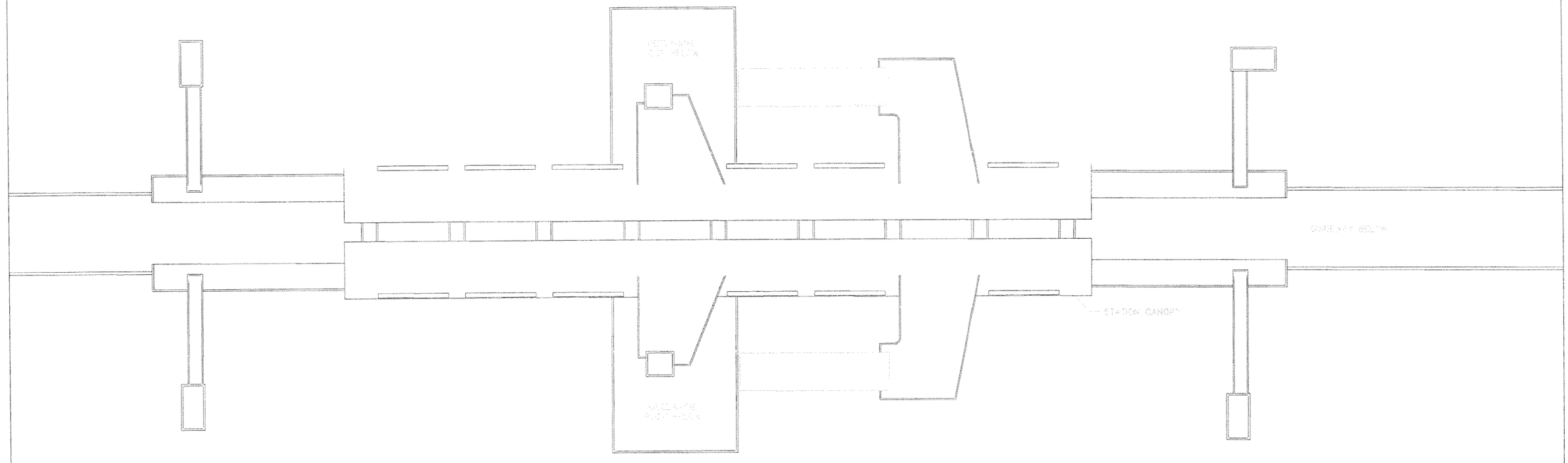

NO FIRE PROTECTION WORK DONE ON THIS SHEET FOR THIS SUBMITTAL.

0 10 20 40

SUBJECT TO CHANGE

G:\550515 Nor... Corridor\NW 82 ST\Mech\Fpro\SHT\FP-05.dwg, 5/12/2006 1:59:07 PM, blindholm

Designed by E.B. Date						
Drawn by XX Date						
Checked by E.B. Date						
Approved by G.V. Date	No.	Date	By / Chk	App.	Revisions	

NORTH CORRIDOR METRORAIL EXTENSION - PRELIMINARY ENGINEERING (100% SUBMITTAL)

MIAMI-DADE COUNTY

MIAMI-DADE TRANSIT

PARSONS
7600 CORPORATE CENTER DRIVE, SUITE 500
MIAMI, FLORIDA 33126
PHONE: (786) 464-1000 FAX: (786) 845-7119
CERTIFICATE OF AUTHORIZATION NO. 1838

Approved | Date

H.J. ROSS
201 ALHAMBRA CIRCLE SUITE 900
CORAL GABLES, FLORIDA 33134
PHONE: (305) 567-1888 / FAX: (305) 567-1771
407

Approved | Date 05-05-06

$DATE$ $TIME$ $FILE$

FIRE PROTECTION

NW 82ND ST. STATION FIRE PROTECTION ROOF PLAN

Scale 1"=20' | Drawing FP-05 | Sheet 283

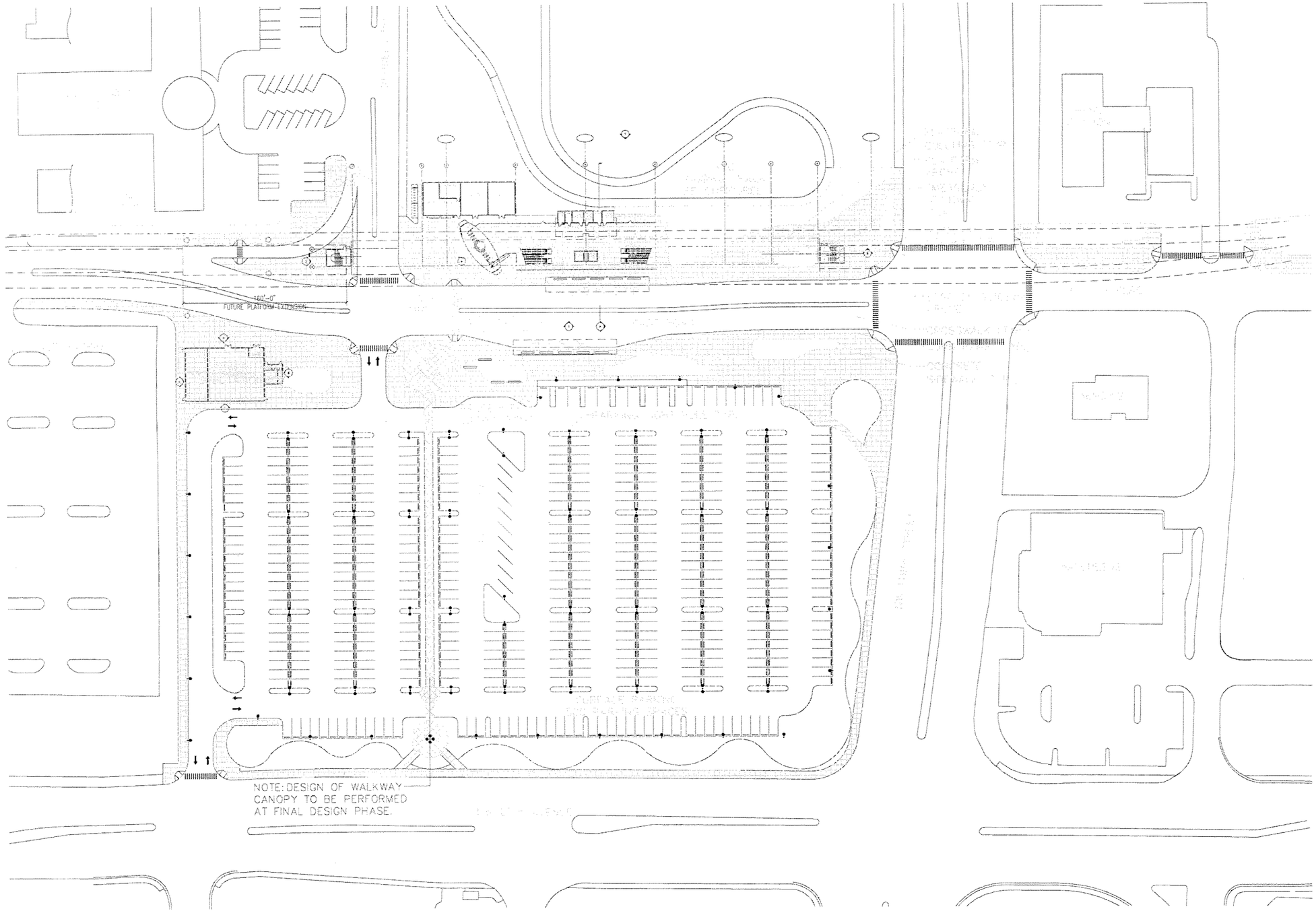

NO FIRE PROTECTION WORK DONE ON THIS SHEET FOR THIS SUBMITTAL.

0 25 50 100

SUBJECT TO CHANGE

G:\550515 No. ...orridor\NW 119 ST\Mech\Fpro\SHT\FP-06.dwg, 5/12/2006 2:15:54 PM, blindholt

Designed by E.B. Date						
Drawn by XX Date						
Checked by E.B. Date						
Approved by G.V. Date	No.	Date	By / Chk	App.	Revisions	

NORTH CORRIDOR METRORAIL EXTENSION - PRELIMINARY ENGINEERING (100% SUBMITTAL)

FIRE PROTECTION

MIAMI-DADE COUNTY

MIAMI-DADE TRANSIT

PARSONS
7600 CORPORATE CENTER DRIVE, SUITE 500
MIAMI, FLORIDA 33126
PHONE: (786) 464-1000 FAX: (786) 845-7119
CERTIFICATE OF AUTHORIZATION NO. 1838

Approved | Date

H.J. ROSS
201 ALHAMBRA CIRCLE SUITE 900
CORAL GABLES, FLORIDA 33134
PHONE: (305) 567-1888 / FAX: (305) 567-1771
407

Approved | Date 05-05-06

$DATE$ $TIME$ $FILE$

NW 119TH ST. STATION
FIRE PROTECTION
SITE PLAN

Scale 1" = 100' | Drawing FP-06 | Sheet 284

SPRINKLER LAYOUT TO COVER
AN ORDINARY HAZARD II LOCATION,
AS PER NFPA 13 & NFPA 130
W/ DENSITY=0.20 GPM/SQFT
FOR A REMOTE AREA OF 1500 SQFT.
FOR AN AREA OF COVERAGE PER
SPRINKLER OF 130 SQFT WE ESTIMATE
THE NEED OF 2 SPRINKLER HEADS.

SPRINKLER LAYOUT TO COVER
AN ORDINARY HAZARD I LOCATION,
AS PER NFPA 13 & NFPA 130
W/ DENSITY=0.15 GPM/SQFT
FOR A REMOTE AREA OF 1500 SQFT.
FOR AN AREA OF COVERAGE PER
SPRINKLER OF 130 SQFT WE ESTIMATE
THE NEED OF 6 SPRINKLER HEADS
PER ROOM.

SPRINKLER LAYOUT TO COVER
A LIGHT HAZARD LOCATION
AS PER NFPA 13 & NFPA 130
W/ DENSITY=0.10 GPM/SQFT
FOR A REMOTE AREA OF 1500 SQFT.
FOR AN AREA OF COVERAGE PER
SPRINKLER OF 130 SQFT WE ESTIMATE
THE NEED OF 1 SPRINKLER HEAD IN
EACH ROOM.

PROVIDE ONE SIDEWALL
SPRINKLER HEAD PER
ELEVATOR TO COVER
ELEVATORS PIT AREAS
AS PER NFPA 13.

SPRINKLER LAYOUT TO COVER
AN ORDINARY HAZARD II LOCATION,
AS PER NFPA 13 & NFPA 130
W/ DENSITY=0.20 GPM/SQFT
FOR A REMOTE AREA OF 1500 SQFT.
FOR AN AREA OF COVERAGE PER
SPRINKLER OF 130 SQFT WE ESTIMATE
THE NEED OF 1 SPRINKLER HEAD IN
EACH ROOM.

0 10 20 40

SUBJECT TO CHANGE

G:\550515 North Corridor\NW 119 ST\Mech\Fpro\SHTFP-07.dwg, 5/12/2006 2:16:04 PM, blindholm

Designed by E.B. Date						
Drawn by XX Date						
Checked by E.B. Date						
Approved by G.V. Date	No.	Date	By / Chk	App.	Revisions	

NORTH CORRIDOR METRORAIL EXTENSION - PRELIMINARY ENGINEERING (100% SUBMITTAL)

MIAMI-DADE COUNTY

MIAMI-DADE TRANSIT

PARSONS
7600 CORPORATE CENTER DRIVE, SUITE 500
MIAMI, FLORIDA 33126
PHONE: (786) 464-1000 FAX: (786) 845-7119
CERTIFICATE OF AUTHORIZATION NO. 1838

Approved | Date

H.J. ROSS
201 ALHAMBRA CIRCLE SUITE 900
CORAL GABLES, FLORIDA 33134
PHONE: (305) 567-1888 / FAX: (305) 567-1771
407

Approved | Date 05-05-06

FIRE PROTECTION

NW 119TH ST. STATION
FIRE PROTECTION
PLAZA LEVEL PLAN

Scale 1"=40' | Drawing FP-07 | Sheet 285

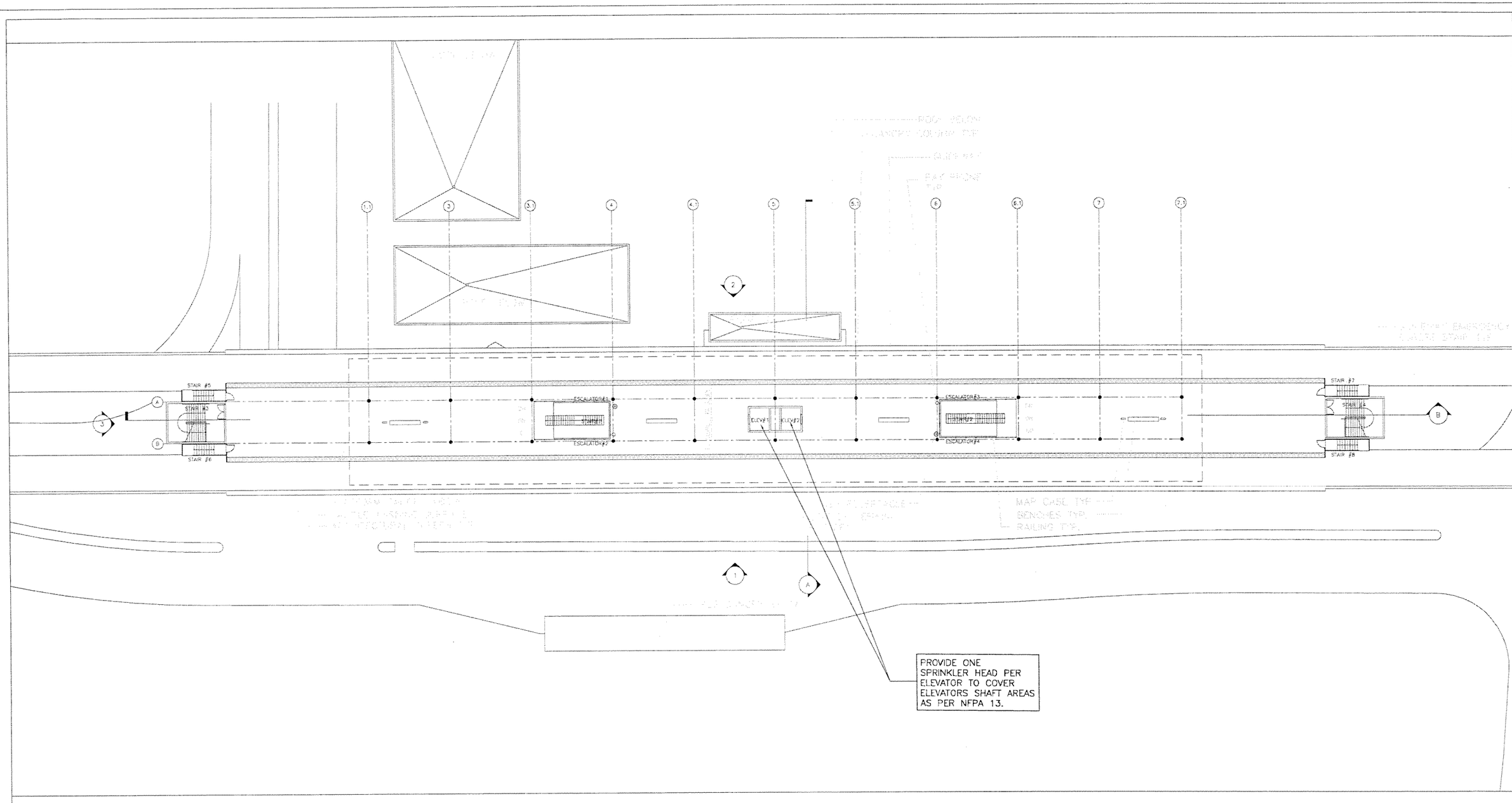

G:\550515 No...\Corridor\NW 119 ST\Mech\Fpro\SHT\FP-08.dwg, 5/12/2006 2:16:13 PM, blindholt

Designed by E.B. Date						
Drawn by XX Date						
Checked by E.B. Date						
Approved by G.V. Date	No.	Date	By / Chk	App.	Revisions	

NORTH CORRIDOR METRORAIL EXTENSION - PRELIMINARY ENGINEERING (100% SUBMITTAL)

MIAMI-DADE COUNTY

MIAMI-DADE TRANSIT

PARSONS
7600 CORPORATE CENTER DRIVE, SUITE 500
MIAMI, FLORIDA 33126
PHONE: (786) 464-1000 FAX: (786) 845-7119
CERTIFICATE OF AUTHORIZATION NO. 1838

Approved | Date

H.J. ROSS
201 ALHAMBRA CIRCLE SUITE 900
CORAL GABLES, FLORIDA 33134
PHONE: (305) 567-1888 / FAX: (305) 567-1771
407

Approved | Date 05-05-06

$DATE$ $TIME$ $FILE$

FIRE PROTECTION

NW 119TH ST. STATION FIRE PROTECTION PLATFORM PLAN

Scale 1"=40' | Drawing FP-08 | Sheet 286

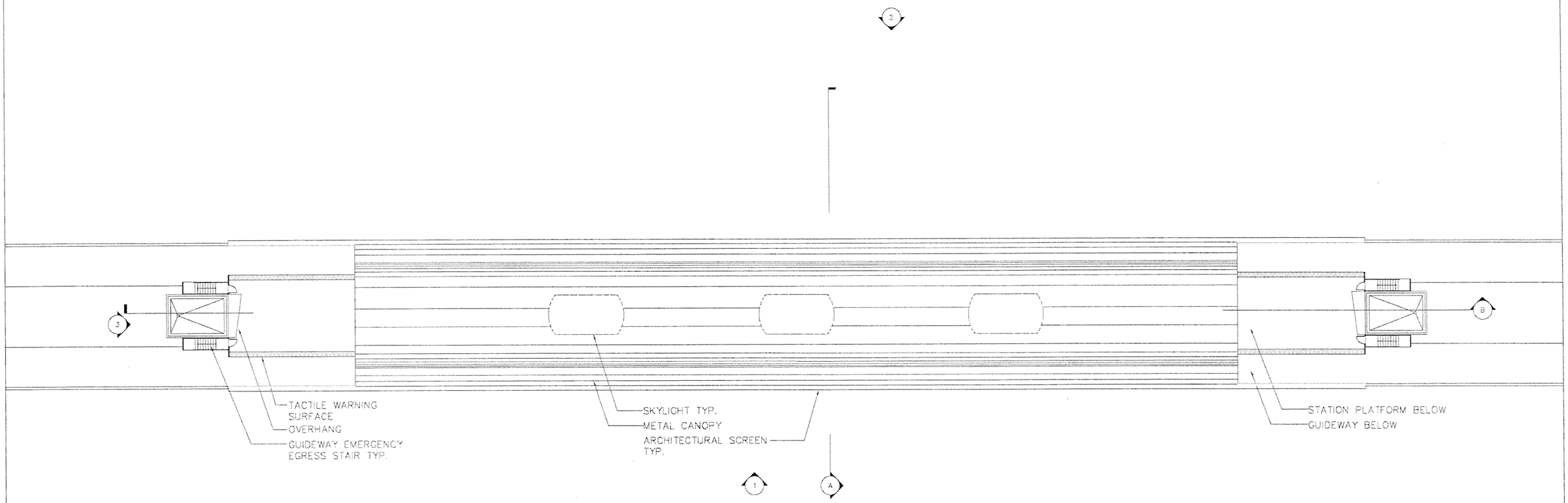

NO FIRE PROTECTION WORK DONE ON THIS SHEET FOR THIS SUBMITTAL.

0 10 20 40

SUBJECT TO CHANGE

Designed by E.B. Date						
Drawn by XX Date						
Checked by E.B. Date						
Approved by G.V. Date	No.	Date	By / Chk	App.	Revisions	

NORTH CORRIDOR METRORAIL EXTENSION - PRELIMINARY ENGINEERING (100% SUBMITTAL)

MIAMI-DADE COUNTY

MIAMI-DADE TRANSIT

PARSONS
7500 CORPORATE CENTER DRIVE, SUITE 500
MIAMI, FLORIDA 33126
PHONE: (786) 464-1000 FAX: (786) 845-7119
CERTIFICATE OF AUTHORIZATION NO. 1838

H.J. ROSS
201 ALHAMBRA CIRCLE SUITE 900
CORAL GABLES, FLORIDA 33134
PHONE: (305) 567-1888 / FAX: (305) 567-1771
407

Approved	Date	Approved	Date	Scale	Drawing	Sheet
			05-05-06	1" = 40'	FP-09	287

FIRE PROTECTION

NW 119TH ST. STATION FIRE PROTECTION ROOF PLAN

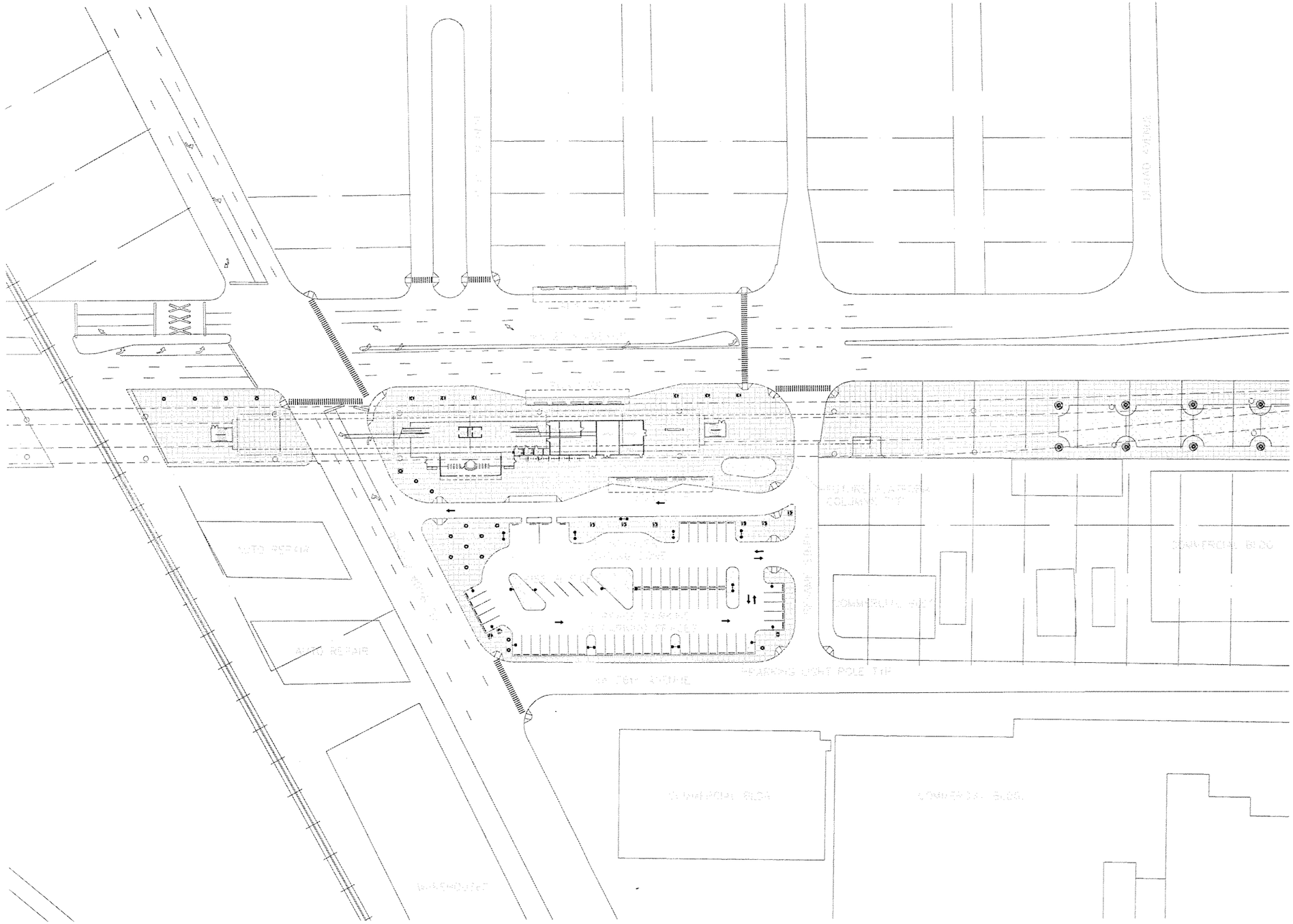

NO FIRE PROTECTION WORK DONE ON THIS SHEET FOR THIS SUBMITTAL.

0 25 50 100

SUBJECT TO CHANGE

Designed by E.B.	Date						
Drawn by XX	Date						
Checked by E.B.	Date						
Approved by G.V.	Date	No.	Date	By / Chk	App.	Revisions	

NORTH CORRIDOR METRORAIL EXTENSION - PRELIMINARY ENGINEERING (100% SUBMITTAL)

MIAMI-DADE COUNTY

MIAMI-DADE TRANSIT

PARSONS
7600 CORPORATE CENTER DRIVE, SUITE 500
MIAMI, FLORIDA 33126
PHONE: (786) 464-1000 FAX: (786) 845-7119
CERTIFICATE OF AUTHORIZATION NO. 1838

H.J. ROSS
201 ALHAMBRA CIRCLE SUITE 900
CORAL GABLES, FLORIDA 33134
PHONE: (305) 567-1888 / FAX: (305) 567-1771
407

Approved	Date	Approved	Date	Scale	Drawing	Sheet
			05-05-06	1" = 100'	FP-10	288
			$DATE$ $TIME$	$FILE$		

FIRE PROTECTION

NW ALI BABA AVE. STATION FIRE PROTECTION SITE PLAN

G:\550515 No... Corridor\NW 143 ST\Mech\Fpro\SHT\FP-10.dwg, 5/12/2006 2:31:54 PM, blindhol

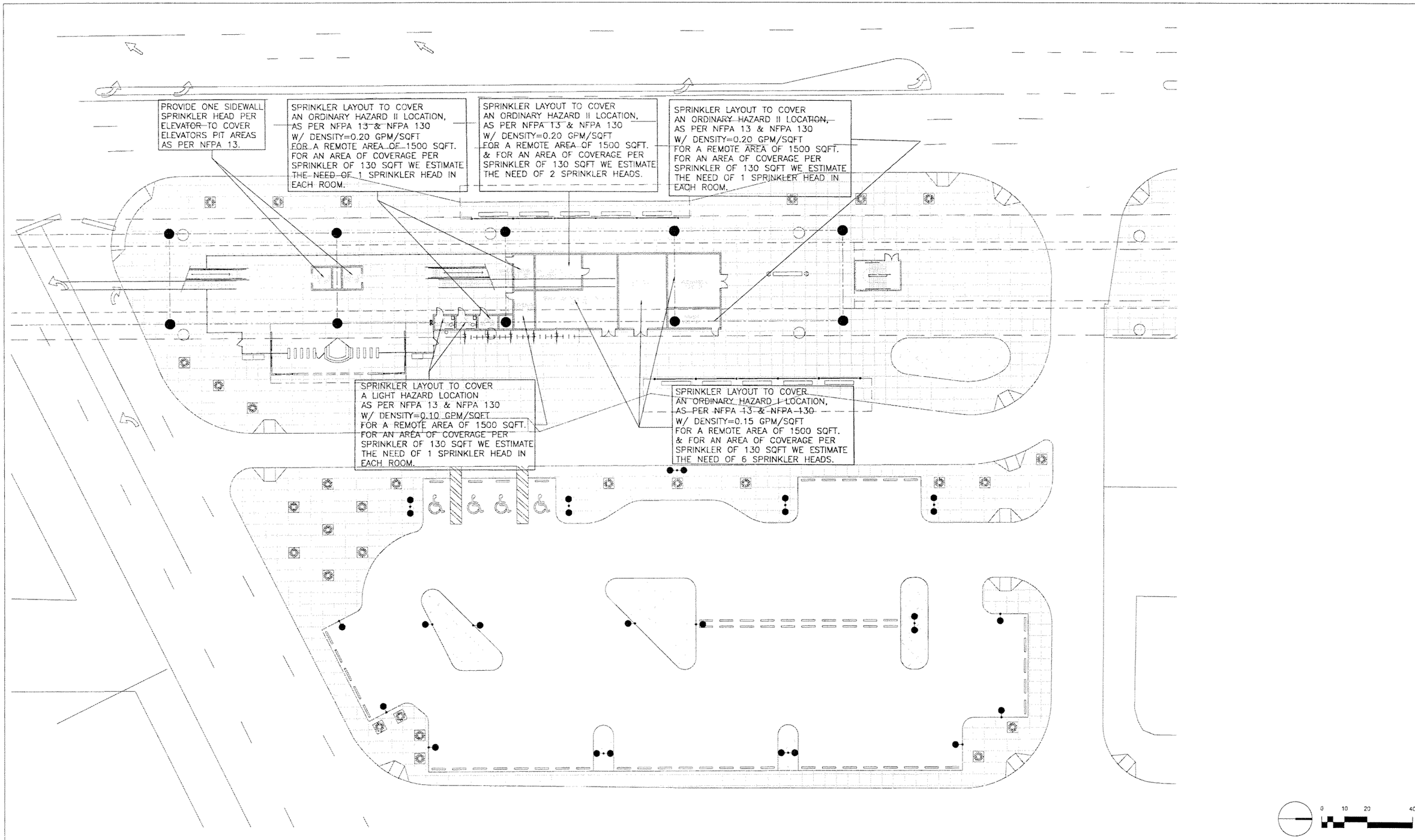

SUBJECT TO CHANGE

NORTH CORRIDOR METRORAIL EXTENSION - PRELIMINARY ENGINEERING (100% SUBMITTAL)

FIRE PROTECTION

Designed by E.B. Date
Drawn by XX Date
Checked by E.B. Date
Approved by G.V. Date

No.	Date	By / Chk	App.	Revisions

MIAMI-DADE COUNTY

MIAMI-DADE TRANSIT

PARSONS
7600 CORPORATE CENTER DRIVE, SUITE 500
MIAMI, FLORIDA 33126
PHONE: (786) 464-1000 FAX: (786) 845-7119
CERTIFICATE OF AUTHORIZATION NO. 1838

H.J. ROSS
201 ALHAMBRA CIRCLE SUITE 900
CORAL GABLES, FLORIDA 33134
PHONE: (305) 567-1888 / FAX: (305) 567-1771
407

NW ALI BABA AVE. STATION
FIRE PROTECTION
PLAZA LEVEL PLAN

Approved | Date | Approved | Date 05-05-06 | Scale 1"=40' | Drawing FP-11 | Sheet 289

G:\550515 N... Corridor\NW 143 ST\Mech\Fpro\SHT\FP-11.dwg, 5/12/2006 2:32:05 PM, blindho...

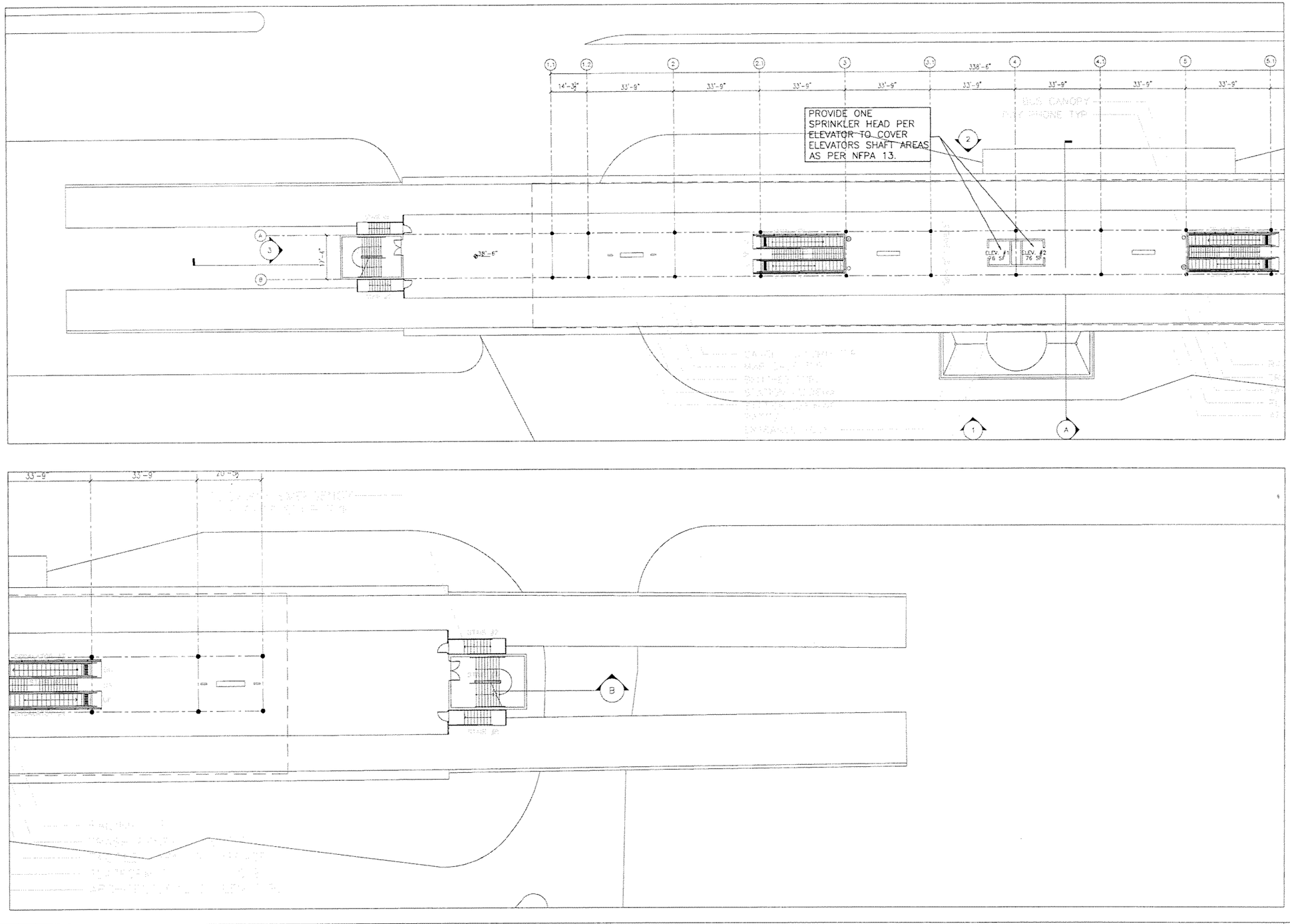

0 8 16 32

SCALE: 1/16" = 1'-0"

SUBJECT TO CHANGE

Designed by E.B. Date						
Drawn by XX Date						
Checked by E.B. Date						
Approved by G.V. Date	No.	Date	By / Chk	App.	Revisions	

NORTH CORRIDOR METRORAIL EXTENSION - PRELIMINARY ENGINEERING (100% SUBMITTAL)

MIAMI-DADE COUNTY

MIAMI-DADE TRANSIT

PARSONS
7600 CORPORATE CENTER DRIVE, SUITE 500
MIAMI, FLORIDA 33126
PHONE: (786) 464-1000 FAX: (786) 845-7119
CERTIFICATE OF AUTHORIZATION NO. 1838

Approved | Date

H.J. ROSS
201 ALHAMBRA CIRCLE SUITE 900
CORAL GABLES, FLORIDA 33134
PHONE: (305) 567-1888 / FAX: (305) 567-1771
407

Approved | Date 05-05-06

FIRE PROTECTION

NW ALI BABA AVE. STATION
FIRE PROTECTION
PLATFORM PLAN

Scale SEE PLAN | Drawing FP-12 | Sheet 290

$DATE$ $TIME$ $FILE$

G:\550515 No... Corridor\NW 143 ST\Mech\Fpro\SHT\FP-12.dwg, 5/12/2006 2:32:13 PM, blindholi

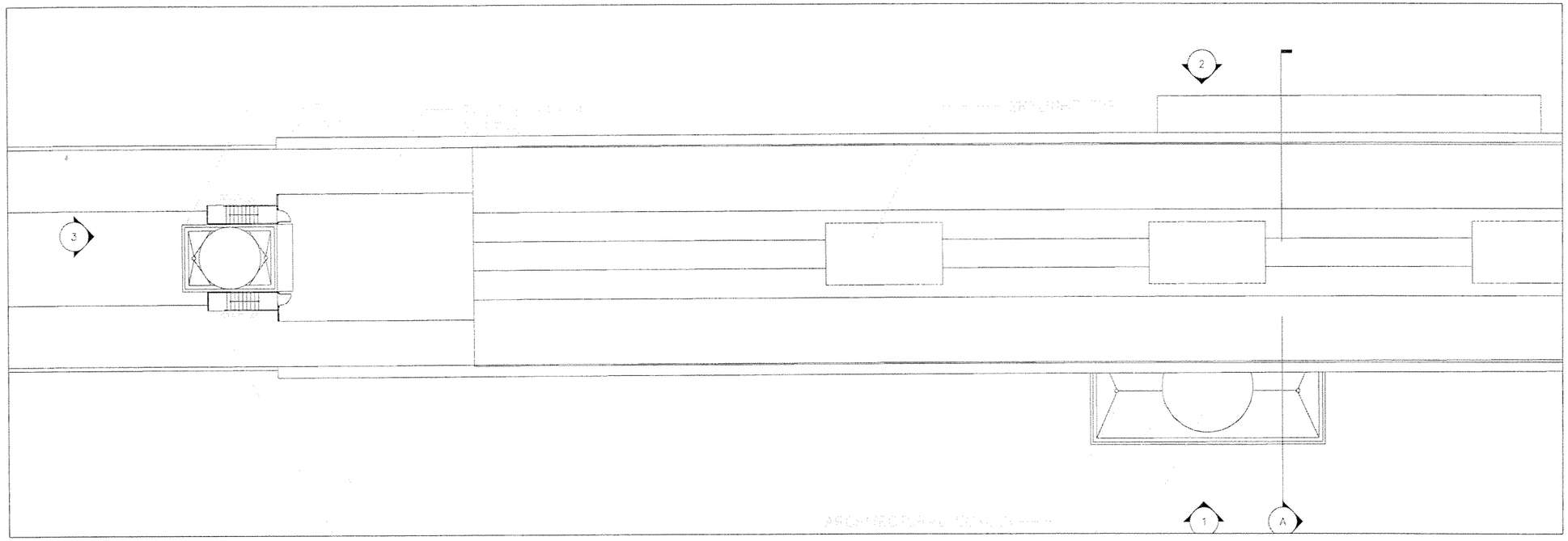

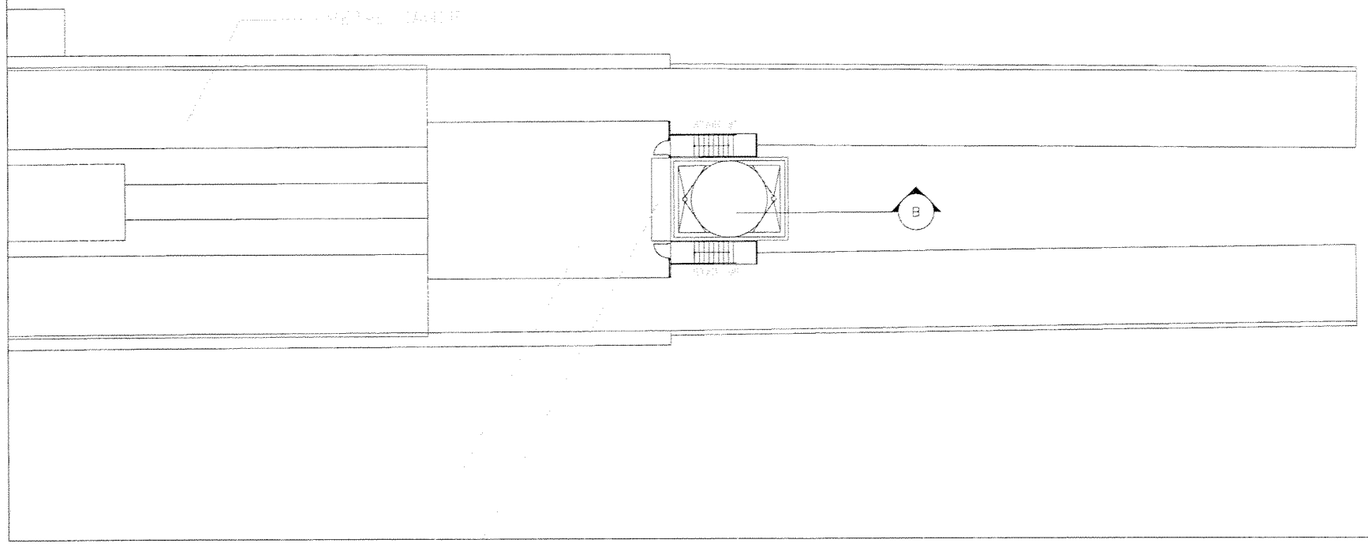

NO FIRE PROTECTION WORK DONE ON THIS SHEET FOR THIS SUBMITTAL.

0 8 16 32

SCALE: 1/16" = 1'-0"

SUBJECT TO CHANGE

Designed by E.B.. Date							
Drawn by XX Date							
Checked by E.B. Date							
Approved by G.V. Date	No.	Date	By / Chk	App.	Revisions		

NORTH CORRIDOR METRORAIL EXTENSION - PRELIMINARY ENGINEERING (100% SUBMITTAL)

MIAMI-DADE COUNTY

MIAMI-DADE TRANSIT

PARSONS
7600 CORPORATE CENTER DRIVE, SUITE 500
MIAMI, FLORIDA 33126
PHONE: (786) 464-1000 FAX: (786) 845-7119
CERTIFICATE OF AUTHORIZATION NO. 1838

Approved | Date

H.J. ROSS
201 ALHAMBRA CIRCLE SUITE 900
CORAL GABLES, FLORIDA 33134
PHONE: (305) 567-1888 / FAX: (305) 567-1771
407

Approved | Date 05-05-06

FIRE PROTECTION

NW ALI BABA AVE. STATION FIRE PROTECTION ROOF PLAN

Scale SEE PLAN | Drawing FP-13 | Sheet 291

G:\550515 No...Corridor\NW 143 ST\Mech\Fpro\SHT\FP-13.dwg, 5/12/2006 2:32:18 PM, blindholr.

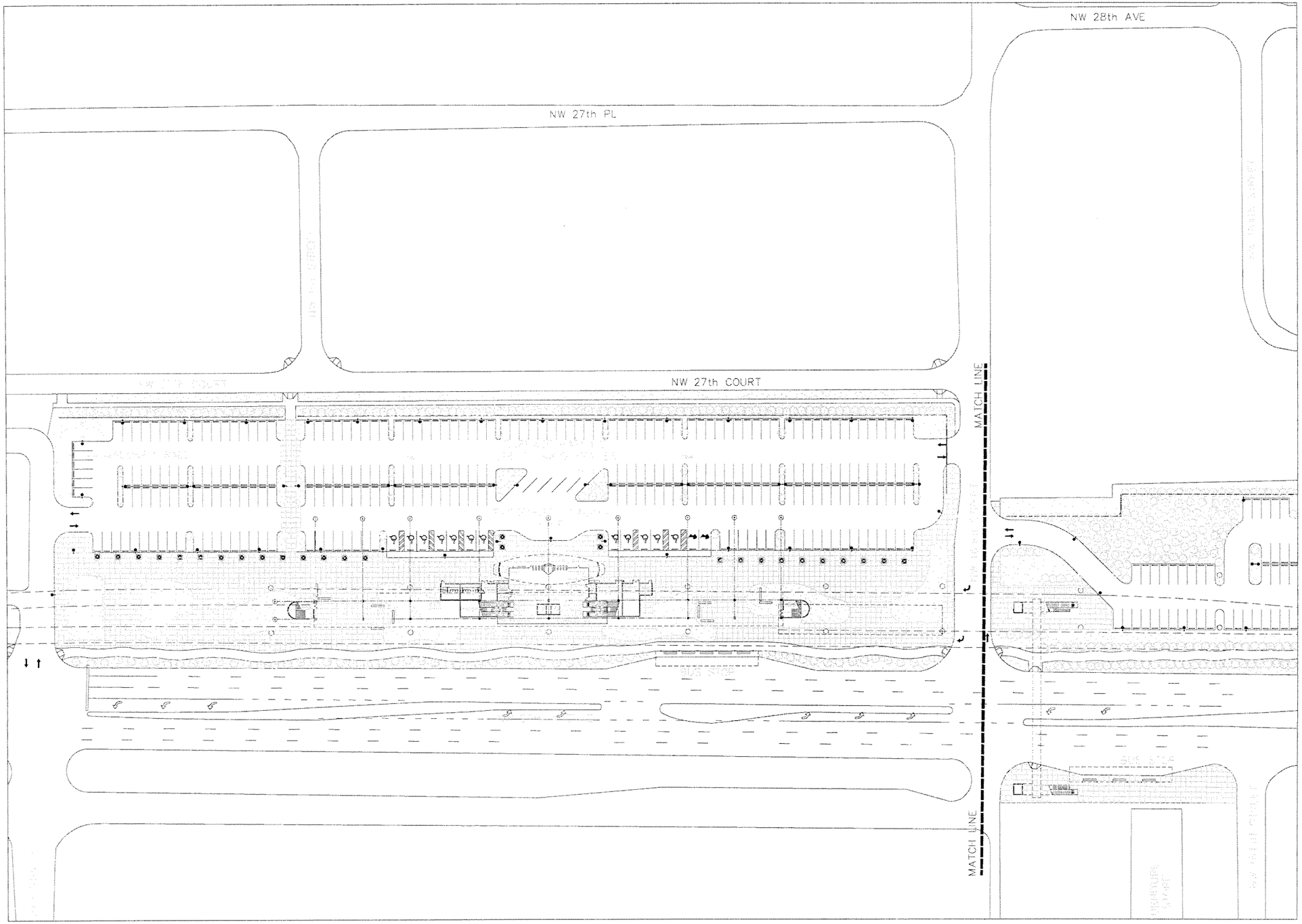

NO FIRE PROTECTION WORK DONE ON THIS SHEET FOR THIS SUBMITTAL.

0 25 50 100

SUBJECT TO CHANGE

G:\550515 No. Corridor\NW 163 ST\Mech\Fpro\SHT\FP-14.dwg, 5/12/2006 2:50:11 PM, blindholt

Designed by E.B. Date							
Drawn by XX Date							
Checked by E.B. Date							
Approved by G.V. Date	No.	Date	By / Chk	App.	Revisions		

NORTH CORRIDOR METRORAIL EXTENSION - PRELIMINARY ENGINEERING (100% SUBMITTAL)

MIAMI-DADE COUNTY

MIAMI-DADE TRANSIT

PARSONS
7600 CORPORATE CENTER DRIVE, SUITE 500
MIAMI, FLORIDA 33126
PHONE: (786) 464-1000 FAX: (786) 845-7119
CERTIFICATE OF AUTHORIZATION NO. 1838

Approved _____ Date _____

H.J. ROSS
201 ALHAMBRA CIRCLE SUITE 900
CORAL GABLES, FLORIDA 33134
PHONE: (305) 567-1888 / FAX: (305) 567-1771
407

Approved _____ Date 05-05-06

FIRE PROTECTION

NW 163RD ST. STATION
FIRE PROTECTION
SITE PLAN

Scale 1" = 100' | Drawing FP-14 | Sheet 292

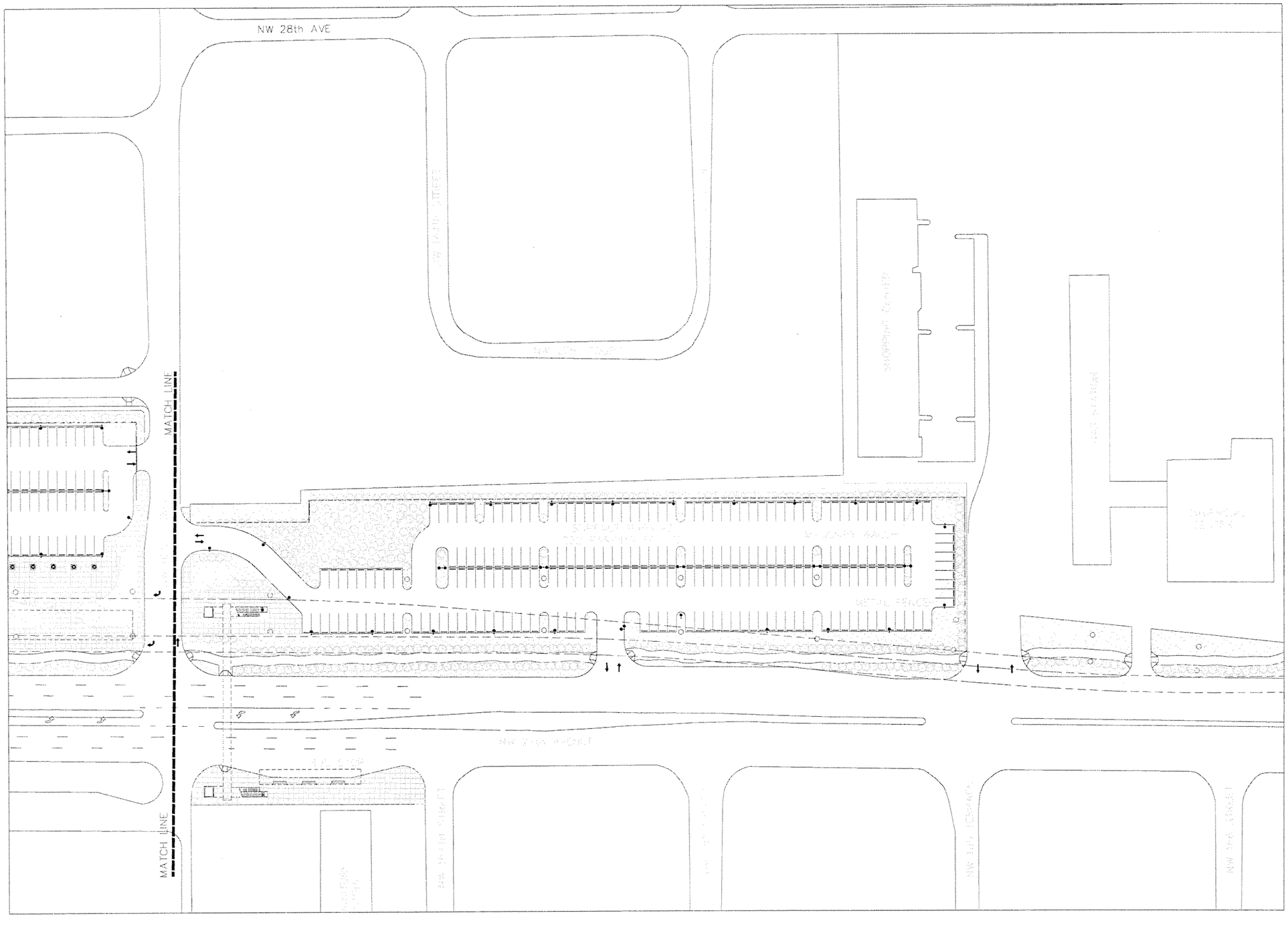

NO FIRE PROTECTION WORK DONE ON THIS SHEET FOR THIS SUBMITTAL.

0 25 50 100

SUBJECT TO CHANGE

G:\550515 No...orridor\NW 163 ST\Mech\Fpro\SHTFP-15.dwg, 5/12/2006 2:50:21 PM, blindholm

Designed by E.B. Date							
Drawn by XX Date							
Checked by E.B. Date							
Approved by G.V. Date	No.	Date	By / Chk	App.	Revisions		

NORTH CORRIDOR METRORAIL EXTENSION - PRELIMINARY ENGINEERING (100% SUBMITTAL)

MIAMI-DADE COUNTY

MIAMI-DADE TRANSIT

PARSONS
7600 CORPORATE CENTER DRIVE, SUITE 500
MIAMI, FLORIDA 33126
PHONE: (786) 464-1000 FAX: (786) 845-7119
CERTIFICATE OF AUTHORIZATION NO. 1838

H.J. ROSS
201 ALHAMBRA CIRCLE SUITE 900
CORAL GABLES, FLORIDA 33134
PHONE: (305) 567-1888 / FAX: (305) 567-1771
407

Approved | Date | Approved | Date 05-05-06

FIRE PROTECTION

NW 163RD ST. STATION
FIRE PROTECTION
SITE PLAN-cont'd

Scale 1" = 100' | Drawing FP-15 | Sheet 293

SPRINKLER LAYOUT TO COVER
AN ORDINARY HAZARD II LOCATION,
AS PER NFPA 13 & NFPA 130
W/ DENSITY=0.20 GPM/SQFT
FOR A REMOTE AREA OF 1500 SQFT.
FOR AN AREA OF COVERAGE PER
SPRINKLER OF 130 SQFT WE ESTIMATE
THE NEED OF 2 SPRINKLER HEADS
PER ROOM.

SPRINKLER LAYOUT TO COVER
A LIGHT HAZARD LOCATION
AS PER NFPA 13 & NFPA 130
W/ DENSITY=0.10 GPM/SQFT
FOR A REMOTE AREA OF 1500 SQFT.
FOR AN AREA OF COVERAGE PER
SPRINKLER OF 130 SQFT WE ESTIMATE
THE NEED OF 1 SPRINKLER HEAD IN
EACH ROOM.

SPRINKLERS LAYOUT TO COVER
AN ORDINARY HAZARD I LOCATION,
AS PER NFPA 13 & NFPA 130
W/ DENSITY=0.15 GPM/SQFT
FOR A REMOTE AREA OF 1500 SQFT.
FOR AN AREA OF COVERAGE PER
SPRINKLER OF 130 SQFT WE ESTIMATE
THE NEED OF 6 SPRINKLER HEADS FOR
THE ELECTRICAL ROOM & 4 SPRINKLER
HEADS FOR THE MECHANICAL ROOM.

SPRINKLER LAYOUT TO COVER
AN ORDINARY HAZARD I LOCATION,
AS PER NFPA 13 & NFPA 130
W/ DENSITY=0.15 GPM/SQFT
FOR A REMOTE AREA OF 1500 SQFT.
FOR AN AREA OF COVERAGE PER
SPRINKLER OF 130 SQFT WE ESTIMATE
THE NEED OF 6 SPRINKLER HEADS.

SPRINKLER LAYOUT TO COVER
AN ORDINARY HAZARD II LOCATION,
AS PER NFPA 13 & NFPA 130
W/ DENSITY=0.20 GPM/SQFT
FOR A REMOTE AREA OF 1500 SQFT.
FOR AN AREA OF COVERAGE PER
SPRINKLER OF 130 SQFT WE ESTIMATE
THE NEED OF 1 SPRINKLER HEAD.

PROVIDE ONE SIDEWALL
SPRINKLER HEAD PER
ELEVATOR TO COVER
ELEVATORS PIT AREAS
AS PER NFPA 13.

SPRINKLER LAYOUT TO COVER
AN ORDINARY HAZARD II LOCATION,
AS PER NFPA 13 & NFPA 130
W/ DENSITY=0.20 GPM/SQFT
FOR A REMOTE AREA OF 1500 SQFT.
FOR AN AREA OF COVERAGE PER
SPRINKLER OF 130 SQFT WE ESTIMATE
THE NEED OF 1 SPRINKLER HEAD IN
EACH ROOM.

0 10 20 40

SUBJECT TO CHANGE

G:\550515 NC...\Corridor\NW 163 ST\Mech\Fpro\SHT\FP-16.dwg, 5/12/2006 2:50:36 PM, blindhol...

Designed by E.B. Date							
Drawn by XX Date							
Checked by E.B. Date							
Approved by G.V. Date	No.	Date	By / Chk	App.	Revisions		

NORTH CORRIDOR METRORAIL EXTENSION - PRELIMINARY ENGINEERING (100% SUBMITTAL)

MIAMI-DADE COUNTY

MIAMI-DADE TRANSIT

PARSONS
7600 CORPORATE CENTER DRIVE, SUITE 500
MIAMI, FLORIDA 33126
PHONE: (786) 464-1000 FAX: (786) 845-7119
CERTIFICATE OF AUTHORIZATION NO. 1838
Approved | Date

H.J. ROSS
201 ALHAMBRA CIRCLE SUITE 900
CORAL GABLES, FLORIDA 33134
PHONE: (305) 567-1888 / FAX: (305) 567-1771
407
Approved | Date 05-05-06

FIRE PROTECTION

NW 163RD ST. STATION
FIRE PROTECTION
PLAZA LEVEL PLAN

Scale 1"=40' | Drawing FP-16 | Sheet 294

G:\550515 Nor... Corridor\NW 163 STMechFpro\SHT\FP-17.dwg, 5/12/2006 2:50:44 PM, blindholm

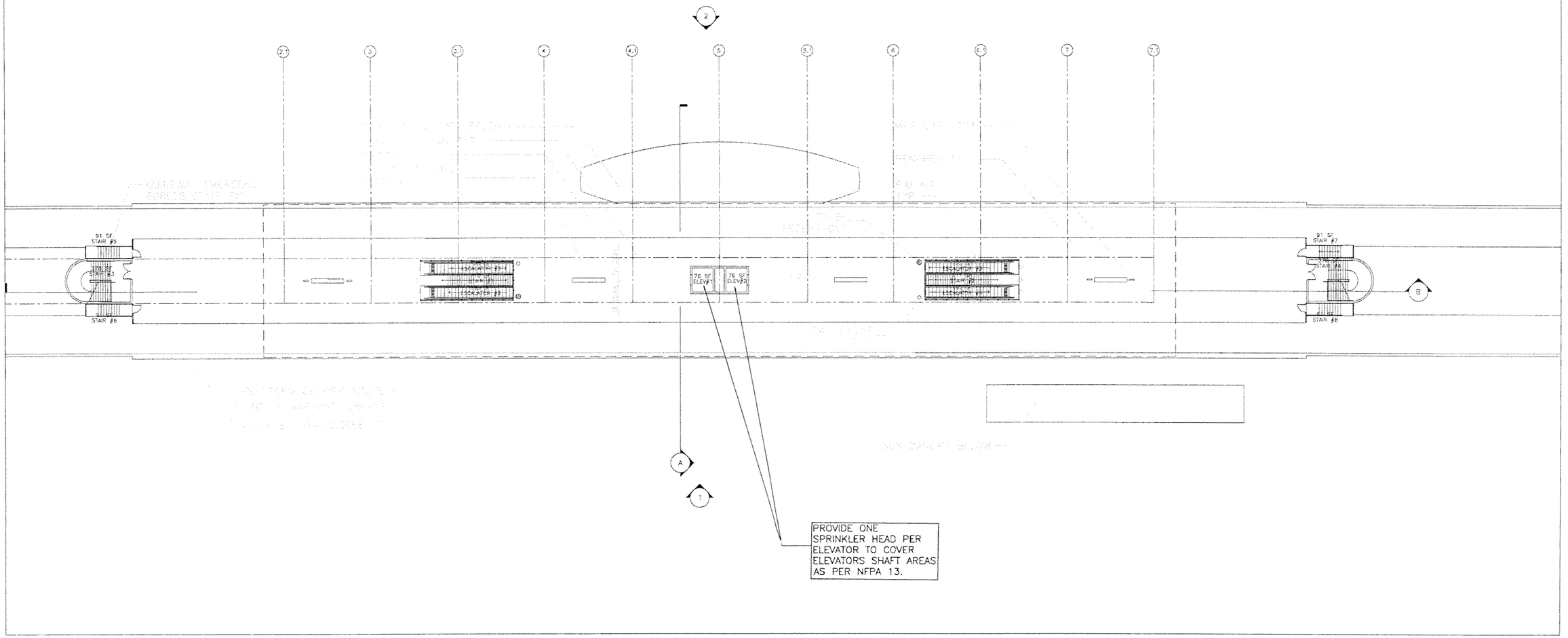

0 10 20 40

SUBJECT TO CHANGE

Designed by E.B. Date						NORTH CORRIDOR METRORAIL EXTENSION - PRELIMINARY ENGINEERING (100% SUBMITTAL)	FIRE PROTECTION
Drawn by XX Date							
Checked by E.B. Date							
Approved by G.V. Date	No.	Date	By / Chk	App.	Revisions	MIAMI-DADE COUNTY / MIAMI-DADE TRANSIT	NW 163RD ST. STATION FIRE PROTECTION PLATFORM LEVEL PLAN

PARSONS
7600 CORPORATE CENTER DRIVE, SUITE 500
MIAMI, FLORIDA 33126
PHONE: (786) 464-1000 FAX: (786) 845-7119
CERTIFICATE OF AUTHORIZATION NO. 1838
Approved ____ Date ____

H.J. ROSS
201 ALHAMBRA CIRCLE SUITE 900
CORAL GABLES, FLORIDA 33134
PHONE: (305) 567-1888 / FAX: (305) 567-1771
407
Approved ____ Date 05-05-06

Scale 1" = 40' Drawing FP-17 Sheet 295

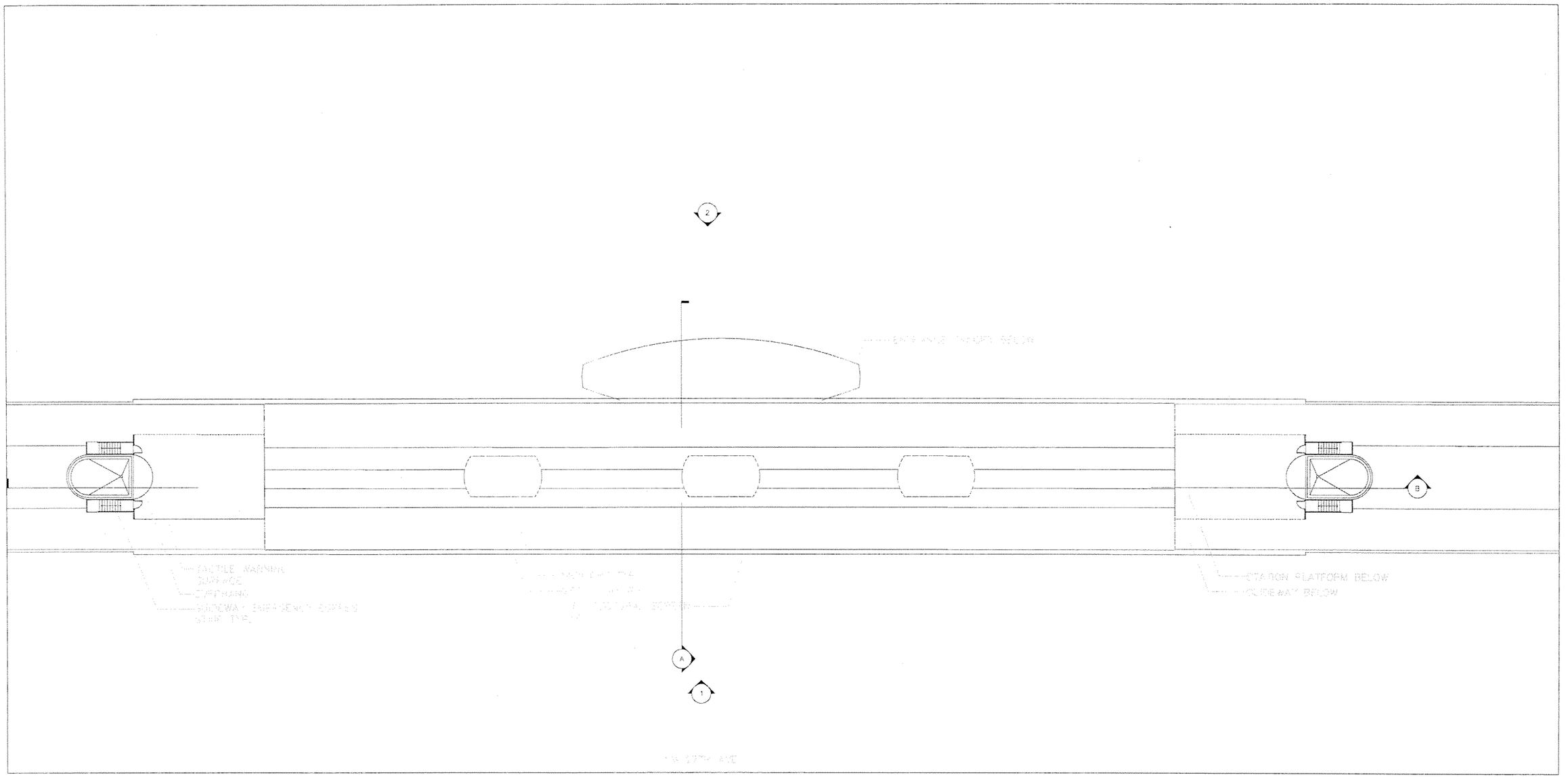

NO FIRE PROTECTION WORK DONE ON THIS SHEET FOR THIS SUBMITTAL.

0 10 20 40

SUBJECT TO CHANGE

Designed by E.B. Date						NORTH CORRIDOR METRORAIL EXTENSION - PRELIMINARY ENGINEERING (100% SUBMITTAL)	FIRE PROTECTION
Drawn by XX Date							
Checked by E.B. Date							
Approved by G.V. Date	No.	Date	By / Chk	App.	Revisions	MIAMI-DADE COUNTY / MIAMI-DADE TRANSIT	NW 163RD ST. STATION FIRE PROTECTION ROOF LEVEL PLAN

PARSONS
7600 CORPORATE CENTER DRIVE, SUITE 500
MIAMI, FLORIDA 33126
PHONE: (786) 464-1000 FAX: (786) 845-7119
CERTIFICATE OF AUTHORIZATION NO. 1838

H.J. ROSS
201 ALHAMBRA CIRCLE SUITE 900
CORAL GABLES, FLORIDA 33134
PHONE: (305) 567-1888 / FAX: (305) 567-1771
407

Approved	Date	Approved	Date	Scale	Drawing	Sheet
			05-05-06	1" = 40'	FP-18	296

G:\550515 No...CorridorNW 163 STMech\Fpro\SHT\FP-18.dwg, 5/12/2006 2:50:49 PM, blindholt

G:\550515 No...Corridor\NW 183 ST\Mech\Fpro\SHT\FP-19.dwg, 5/12/2006 3:24:57 PM, blindhal

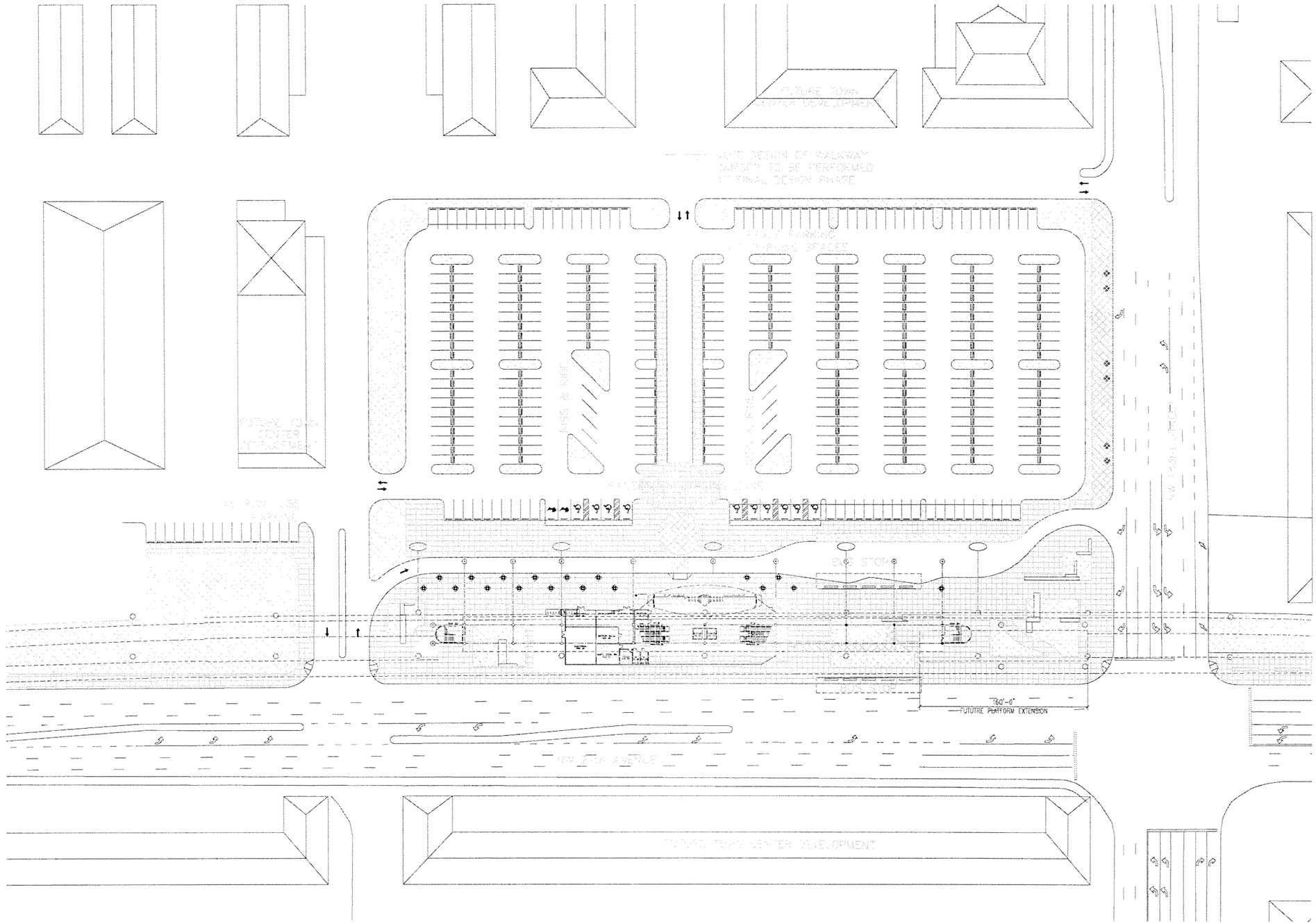

NO FIRE PROTECTION WORK DONE ON THIS SHEET FOR THIS SUBMITTAL.

0 25 50 100

SUBJECT TO CHANGE

Designed by E.B. Date						
Drawn by XX Date						
Checked by E.B. Date						
Approved by G.V. Date	No.	Date	By / Chk	App.	Revisions	

NORTH CORRIDOR METRORAIL EXTENSION - PRELIMINARY ENGINEERING (100% SUBMITTAL)

MIAMI-DADE COUNTY

MIAMI-DADE TRANSIT

PARSONS
7600 CORPORATE CENTER DRIVE, SUITE 500
MIAMI, FLORIDA 33126
PHONE: (786) 464-1000 FAX: (786) 845-7119
CERTIFICATE OF AUTHORIZATION NO. 1838

H.J. ROSS
201 ALHAMBRA CIRCLE SUITE 900
CORAL GABLES, FLORIDA 33134
PHONE: (305) 567-1888 / FAX: (305) 567-1771
407

Approved	Date	Approved	Date 05-05-06

FIRE PROTECTION

NW 183RD ST. STATION
FIRE PROTECTION
SITE PLAN

Scale	Drawing	Sheet
1" = 100'	FP-19	297

SPRINKLER LAYOUT TO COVER AN ORDINARY HAZARD I LOCATION, AS PER NFPA 13 & NFPA 130 W/ DENSITY=0.15 GPM/SQFT FOR A REMOTE AREA OF 1500 SQFT. FOR AN AREA OF COVERAGE PER SPRINKLER OF 130 SQFT WE ESTIMATE THE NEED OF 6 SPRINKLER HEADS.

SPRINKLER LAYOUT TO COVER AN ORDINARY HAZARD I LOCATION, AS PER NFPA 13 & NFPA 130 W/ DENSITY=0.15 GPM/SQFT FOR A REMOTE AREA OF 1500 SQFT. FOR AN AREA OF COVERAGE PER SPRINKLER OF 130 SQFT WE ESTIMATE THE NEED OF 2 SPRINKLER HEADS.

PROVIDE ONE SIDEWALL SPRINKLER HEAD PER ELEVATOR TO COVER ELEVATORS PIT AREAS AS PER NFPA 13.

SPRINKLER LAYOUT TO COVER AN ORDINARY HAZARD II LOCATION, AS PER NFPA 13 & NFPA 130 W/ DENSITY=0.20 GPM/SQFT FOR A REMOTE AREA OF 1500 SQFT. FOR AN AREA OF COVERAGE PER SPRINKLER OF 130 SQFT WE ESTIMATE THE NEED OF 2 SPRINKLER HEADS PER ROOM.

SPRINKLER LAYOUT TO COVER AN ORDINARY HAZARD II LOCATION, AS PER NFPA 13 & NFPA 130 W/ DENSITY=0.20 GPM/SQFT FOR A REMOTE AREA OF 1500 SQFT. FOR AN AREA OF COVERAGE PER SPRINKLER OF 130 SQFT WE ESTIMATE THE NEED OF 1 SPRINKLER HEAD PER ROOM.

SPRINKLER LAYOUT TO COVER A LIGHT HAZARD LOCATION AS PER NFPA 13 & NFPA 130 W/ DENSITY=0.10 GPM/SQFT FOR A REMOTE AREA OF 1500 SQFT. FOR AN AREA OF COVERAGE PER SPRINKLER OF 130 SQFT WE ESTIMATE THE NEED OF 1 SPRINKLER HEAD IN EACH ROOM.

NW 27th AVENUE

FUTUTRE Pt

0 10 20 40

SUBJECT TO CHANGE

Designed by E.B. Date
Drawn by XX Date
Checked by E.B. Date
Approved by G.V. Date

No.	Date	By / Chk	App.	Revisions

NORTH CORRIDOR METRORAIL EXTENSION - PRELIMINARY ENGINEERING (100% SUBMITTAL)

MIAMI-DADE COUNTY

MIAMI-DADE TRANSIT

PARSONS
7600 CORPORATE CENTER DRIVE, SUITE 500
MIAMI, FLORIDA 33126
PHONE: (786) 464-1000 FAX: (786) 845-7119
CERTIFICATE OF AUTHORIZATION NO. 1838

Approved Date

H.J. ROSS
201 ALHAMBRA CIRCLE SUITE 900
CORAL GABLES, FLORIDA 33134
PHONE: (305) 567-1888 / FAX: (305) 567-1771
407

Approved Date 05-05-06

$DATE$ $TIME$ $FILE$

FIRE PROTECTION

NW 183RD ST. STATION
FIRE PROTECTION
PLAZA LEVEL PLAN

Scale 1"=40' Drawing FP-20 Sheet 298

G:\550515 Nor...orridor\NW 183 STMech\Fpro\SHTFP-20.dwg, 5/12/2006 3:48:21 PM, blindholn

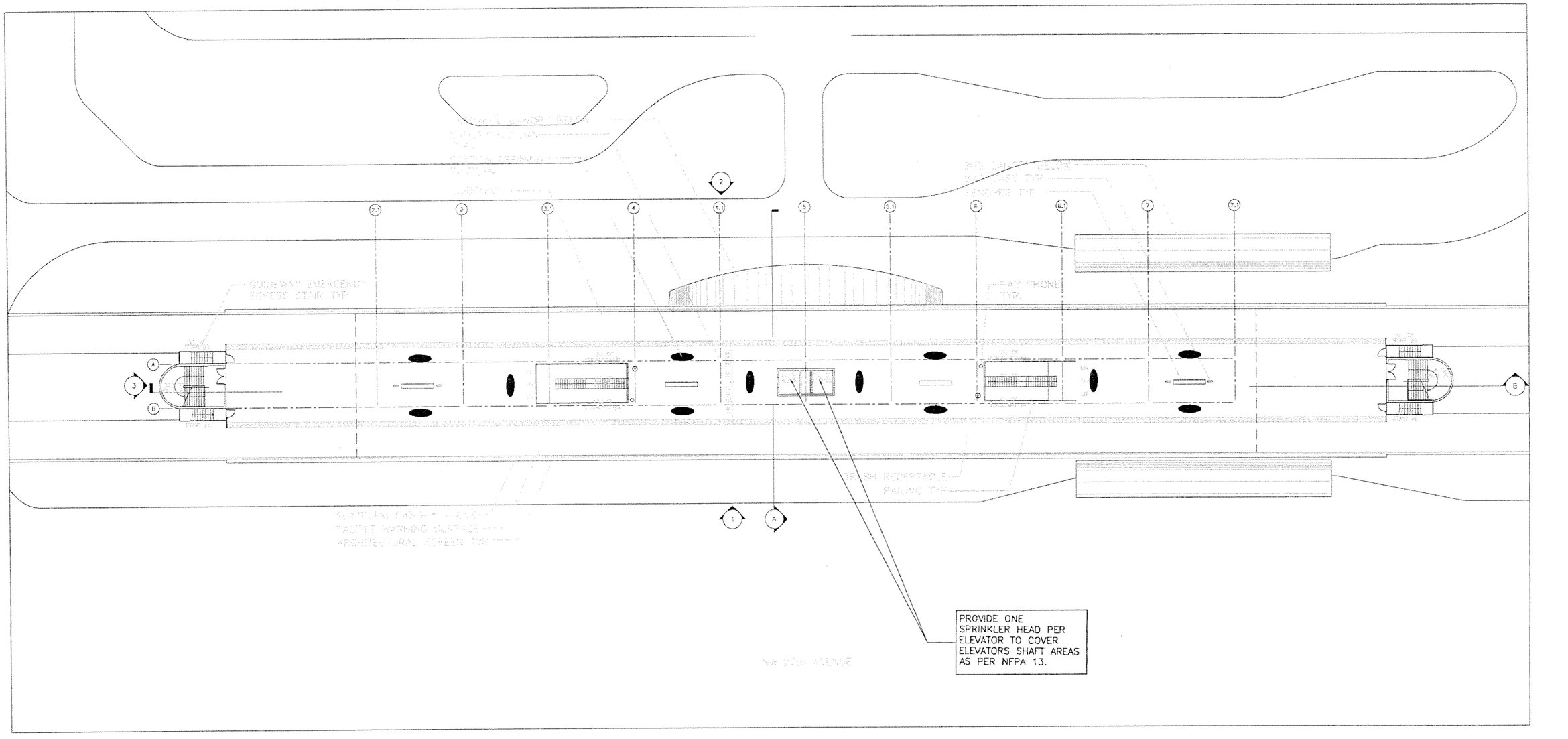

0 10 20 40

SUBJECT TO CHANGE

Designed by E.B. Date							
Drawn by XX Date							
Checked by E.B. Date							
Approved by G.V. Date	No.	Date	By / Chk	App.	Revisions		

NORTH CORRIDOR METRORAIL EXTENSION - PRELIMINARY ENGINEERING (100% SUBMITTAL)

MIAMI-DADE COUNTY

MIAMI-DADE TRANSIT

PARSONS
7600 CORPORATE CENTER DRIVE, SUITE 500
MIAMI, FLORIDA 33126
PHONE: (786) 464-1000 FAX: (786) 845-7119
CERTIFICATE OF AUTHORIZATION NO. 1838

Approved | Date

H.J. ROSS
201 ALHAMBRA CIRCLE SUITE 900
CORAL GABLES, FLORIDA 33134
PHONE: (305) 567-1888 / FAX: (305) 567-1771
407

Approved | Date 05-05-06

$DATE$ $TIME$ $FILE$

FIRE PROTECTION

NW 183RD ST. STATION
FIRE PROTECTION
PLATFORM LEVEL PLAN

Scale 1" = 40' | Drawing FP-21 | Sheet 299

G:\550515 No...Corridor\NW 183 ST\Mech\Fpro\SHT\FP-21.dwg, 5/12/2006 3:25:21 PM, blindhol

G:\550515 No... Corridor\NW 183 ST\Mech\Fpro\SHT\FP-22.dwg, 5/12/2006 3:25:25 PM, blindho

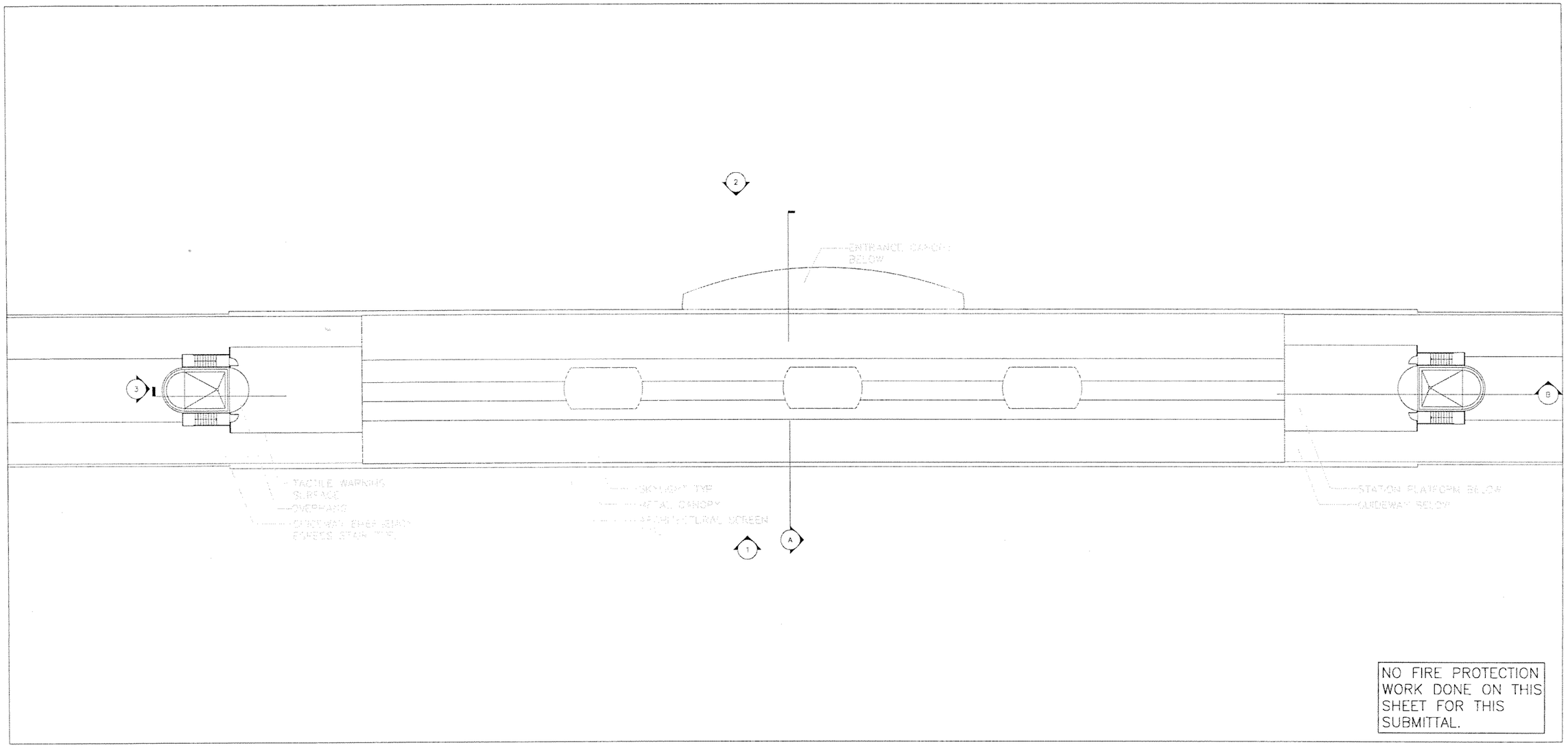

NO FIRE PROTECTION WORK DONE ON THIS SHEET FOR THIS SUBMITTAL.

0 10 20 40

SUBJECT TO CHANGE

Designed by E.B. Date						NORTH CORRIDOR METRORAIL EXTENSION - PRELIMINARY ENGINEERING (100% SUBMITTAL)
Drawn by XX Date						
Checked by E.B. Date						
Approved by G.V. Date	No.	Date	By / Chk	App.	Revisions	

MIAMI-DADE COUNTY — MIAMI-DADE TRANSIT

PARSONS
7600 CORPORATE CENTER DRIVE, SUITE 500
MIAMI, FLORIDA 33126
PHONE: (786) 464-1000 FAX: (786) 845-7119
CERTIFICATE OF AUTHORIZATION NO. 1838

Approved | Date

H.J. ROSS
201 ALHAMBRA CIRCLE SUITE 900
CORAL GABLES, FLORIDA 33134
PHONE: (305) 567-1888 / FAX: (305) 567-1771
407

Approved | Date 05-05-06

$DATE$ $TIME$ $FILE$

FIRE PROTECTION

NW 183RD ST. STATION FIRE PROTECTION ROOF PLAN

Scale 1" = 4'-0" | Drawing FP-22 | Sheet 300

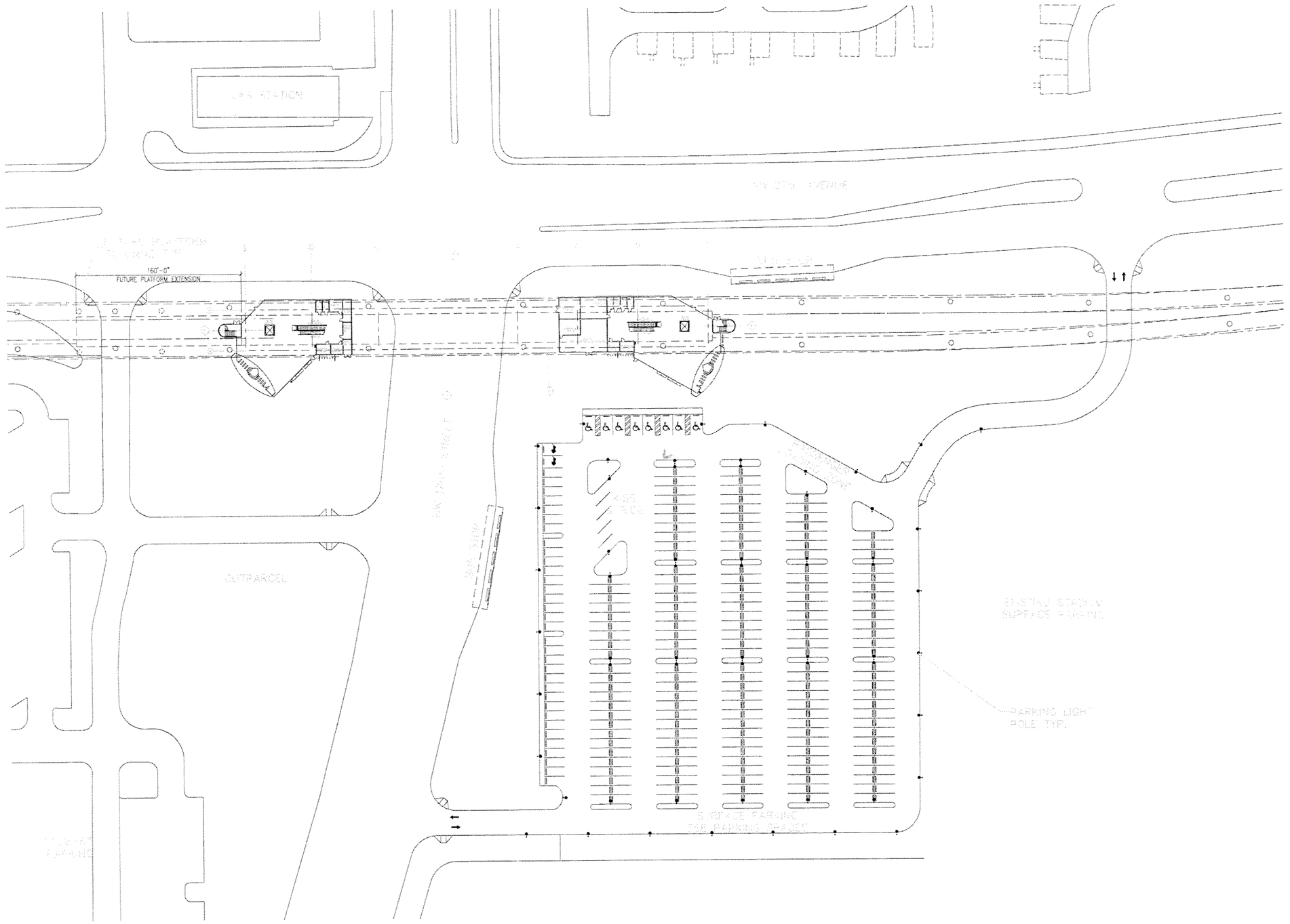

NO FIRE PROTECTION WORK DONE ON THIS SHEET FOR THIS SUBMITTAL.

0 25 50 100

SUBJECT TO CHANGE

Designed by E.B. Date					
Drawn by XX Date					
Checked by E.B. Date					
Approved by G.V. Date	No.	Date	By / Chk	App.	Revisions

NORTH CORRIDOR METRORAIL EXTENSION - PRELIMINARY ENGINEERING (100% SUBMITTAL)

MIAMI-DADE COUNTY

MIAMI-DADE TRANSIT

PARSONS
7600 CORPORATE CENTER DRIVE, SUITE 500
MIAMI, FLORIDA 33126
PHONE: (786) 464-1000 FAX: (786) 845-7119
CERTIFICATE OF AUTHORIZATION NO. 1838

H.J. ROSS
201 ALHAMBRA CIRCLE SUITE 900
CORAL GABLES, FLORIDA 33134
PHONE: (305) 567-1888 / FAX: (305) 567-1771
407

Approved	Date	Approved	Date
			05-05-06
$DATE$	$TIME$	$FILE$	

FIRE PROTECTION

NW 199TH ST. STATION
FIRE PROTECTION
SITE PLAN

Scale 1"=100' Drawing FP-23 Sheet 301

G:\1550515 Nc... Corridor\NW 199 STMech\Fpro\SHT\FP-23.dwg, 5/12/2006 3:30:29 PM, blindho...

SPRINKLER LAYOUT TO COVER
A LIGHT HAZARD LOCATION
AS PER NFPA 13 & NFPA 130
W/ DENSITY=0.10 GPM/SQFT
FOR A REMOTE AREA OF 1500 SQFT.
& FOR AN AREA OF COVERAGE PER
SPRINKLER OF 130 SQFT WE ESTIMATE
THE NEED OF 1 SPRINKLER HEAD IN EACH
ROOM.

SPRINKLER LAYOUT TO COVER
AN ORDINARY HAZARD II LOCATION,
AS PER NFPA 13 & NFPA 130
W/ DENSITY=0.20 GPM/SQFT
FOR A REMOTE AREA OF 1500 SQFT.
FOR AN AREA OF COVERAGE PER
SPRINKLER OF 130 SQFT WE ESTIMATE
THE NEED OF 1 SPRINKLER HEAD
PER ROOM.

SPRINKLER LAYOUT TO COVER AN ORDINARY
HAZARD I LOCATION, AS PER NFPA 13 &
NFPA 130
W/ DENSITY=0.15 GPM/SQFT FOR A REMOTE
AREA OF 1500 SQFT.
FOR AN AREA OF COVERAGE PER SPRINKLER
OF 130 SQFT WE ESTIMATE THE NEED OF 4
SPRINKLER HEADS FOR THE MECHANICAL &
ELECTRICAL ROOMS
& 8 SPRINKLER HEADS FOR COMMUNICATION
AND CONTROL ROOM.

SPRINKLER LAYOUT TO COVER
A LIGHT HAZARD LOCATION
AS PER NFPA 13 & NFPA 130
W/ DENSITY=0.10 GPM/SQFT
FOR A REMOTE AREA OF 1500 SQFT.
& FOR AN AREA OF COVERAGE PER
SPRINKLER OF 130 SQFT WE ESTIMATE
THE NEED OF 1 SPRINKLER HEAD IN EACH
ROOM.

)'-0"
ORM EXTENSION

SPRINKLER LAYOUT TO COVER
AN ORDINARY HAZARD I LOCATION,
AS PER NFPA 13 & NFPA 130
W/ DENSITY=0.15 GPM/SQFT
FOR A REMOTE AREA OF 1500 SQFT.
FOR AN AREA OF COVERAGE PER
SPRINKLER OF 130 SQFT WE ESTIMATE
THE NEED OF 1 SPRINKLER HEAD
PER ROOM.

SPRINKLER LAYOUT TO COVER
AN ORDINARY HAZARD II LOCATION,
AS PER NFPA 13 & NFPA 130
W/ DENSITY=0.20 GPM/SQFT
FOR A REMOTE AREA OF 1500 SQFT.
FOR AN AREA OF COVERAGE PER
SPRINKLER OF 130 SQFT WE ESTIMATE
THE NEED OF 2 SPRINKLER HEADS.

PROVIDE ONE SIDEWALL
SPRINKLER HEAD
TO COVER ELEVATOR
PIT AREA AS PER
NFPA 13.

SPRINKLER LAYOUT TO COVER
AN ORDINARY HAZARD II LOCATION,
AS PER NFPA 13 & NFPA 130
W/ DENSITY=0.20 GPM/SQFT
FOR A REMOTE AREA OF 1500 SQFT.
FOR AN AREA OF COVERAGE PER
SPRINKLER OF 130 SQFT WE ESTIMATE
THE NEED OF 1 SPRINKLER HEAD
PER ROOM.

PROVIDE ONE SIDEWALL
SPRINKLER HEAD
TO COVER ELEVATOR
PIT AREA AS PER
NFPA 13.

RAMP

0 10 20 40

SUBJECT TO CHANGE

G:\550515 No\... \CorridorNW 199 ST\Mech\Fpro\SHTFP-24.dwg, 5/12/2006 3:30:40 PM, blindholr

Designed by E.B. Date						
Drawn by XX Date						
Checked by E.B. Date						
Approved by G.V. Date	No.	Date	By / Chk	App.	Revisions	

NORTH CORRIDOR METRORAIL EXTENSION - PRELIMINARY ENGINEERING (100% SUBMITTAL)

FIRE PROTECTION

MIAMI-DADE COUNTY
MIAMI-DADE TRANSIT

PARSONS
7600 CORPORATE CENTER DRIVE, SUITE 500
MIAMI, FLORIDA 33126
PHONE: (786) 464-1000 FAX: (786) 845-7119
CERTIFICATE OF AUTHORIZATION NO. 1838

H.J. ROSS
201 ALHAMBRA CIRCLE SUITE 900
CORAL GABLES, FLORIDA 33134
PHONE: (305) 567-1888 / FAX: (305) 567-1771
407

Approved | Date | Approved | Date 05-05-06 | $DATE$ | $TIME$ | $FILE$

NW 199TH ST. STATION FIRE PROTECTION PLAZA LEVEL PLAN

Scale 1"=40' | Drawing FP-24 | Sheet 30

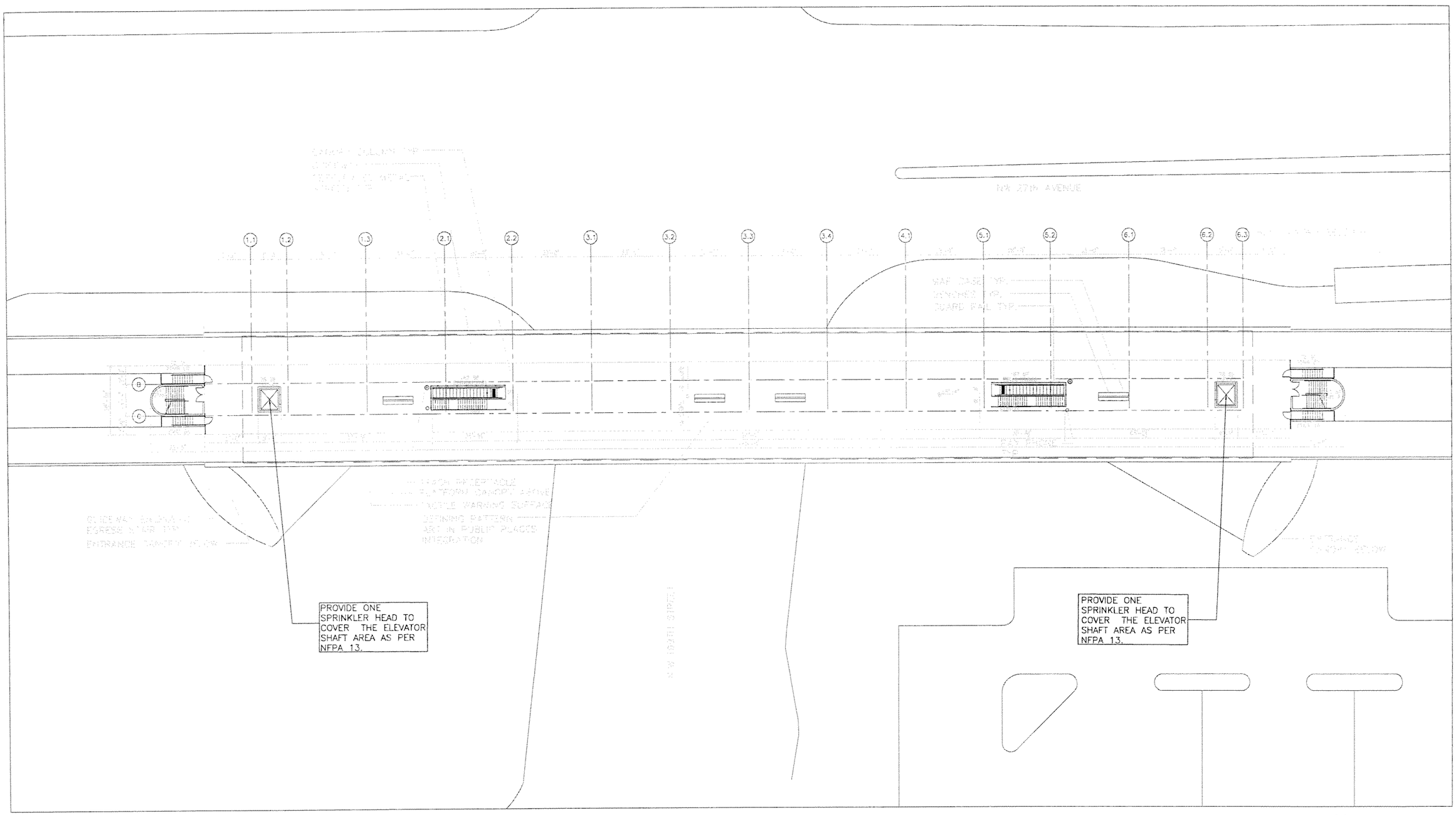

SUBJECT TO CHANGE

G:\550515 NC...Corridor\NW 199 ST\Mech\Fpro\SHTFP-25.dwg, 5/12/2006 3:30:48 PM, blindho...

Designed by E.B. Date						
Drawn by XX Date						
Checked by E.B. Date						
Approved by G.V. Date	No.	Date	By / Chk	App.	Revisions	

NORTH CORRIDOR METRORAIL EXTENSION - PRELIMINARY ENGINEERING (100% SUBMITTAL)

MIAMI-DADE COUNTY

MIAMI-DADE TRANSIT

PARSONS
7600 CORPORATE CENTER DRIVE, SUITE 500
MIAMI, FLORIDA 33126
PHONE: (786) 464-1000 FAX: (786) 845-7119
CERTIFICATE OF AUTHORIZATION NO. 1838

H.J. ROSS
201 ALHAMBRA CIRCLE SUITE 900
CORAL GABLES, FLORIDA 33134
PHONE: (305) 567-1688 / FAX: (305) 567-1771
407

Approved	Date	Approved	Date
			05-05-06

$DATE$ $TIME$ $FILE$

FIRE PROTECTION

NW 199TH ST. STATION FIRE PROTECTION PLAFORM LEVEL PLAN

Scale 1"=40' Drawing FP-25 Sheet 303

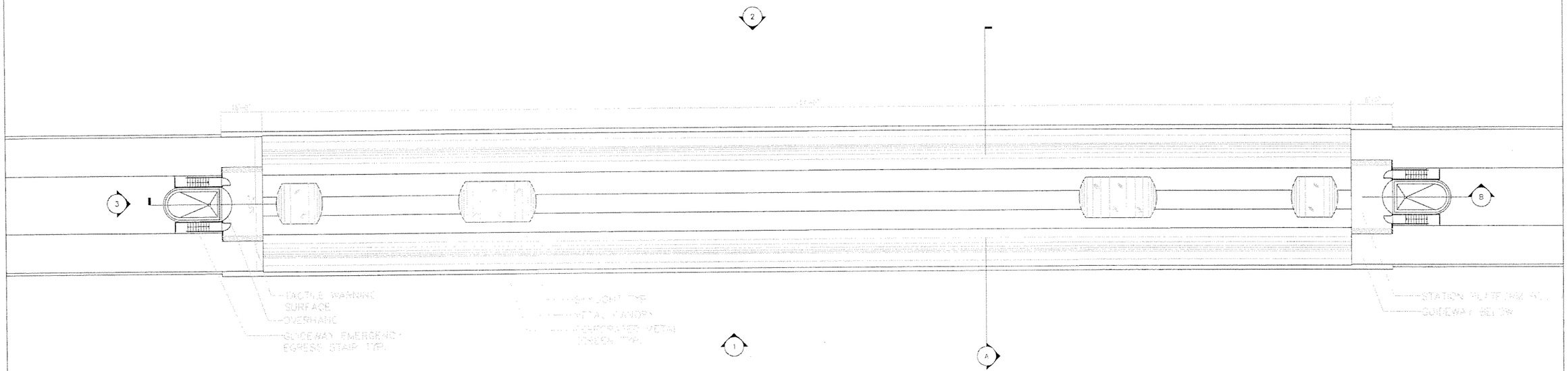

NO FIRE PROTECTION WORK DONE ON THIS SHEET FOR THIS SUBMITTAL.

0 10 20 40

SUBJECT TO CHANGE

Designed by E.B. Date						NORTH CORRIDOR METRORAIL EXTENSION - PRELIMINARY ENGINEERING (100% SUBMITTAL)	FIRE PROTECTION
Drawn by XX Date							
Checked by E.B. Date							
Approved by G.V. Date	No.	Date	By / Chk	App.	Revisions	MIAMI-DADE COUNTY MIAMI-DADE TRANSIT	NW 199TH ST. STATION FIRE PROTECTION ROOF PLAN

PARSONS
7600 CORPORATE CENTER DRIVE, SUITE 500
MIAMI, FLORIDA 33126
PHONE: (786) 464-1000 FAX: (786) 845-7119
CERTIFICATE OF AUTHORIZATION NO. 1638

H.J. ROSS
201 ALHAMBRA CIRCLE SUITE 900
CORAL GABLES, FLORIDA 33134
PHONE: (305) 567-1888 / FAX: (305) 567-1771
407

Approved	Date	Approved	Date	Scale	Drawing	Sheet
			05-05-06	1" = 40'	FP-26	30
			$DATE$ $TIME$	$FILE$		

G:\550515 No...Corridor\NW 199 ST\Mechl\Fpro\SHT\FP-26.dwg, 5/12/2006 3:30:52 PM, blindhol

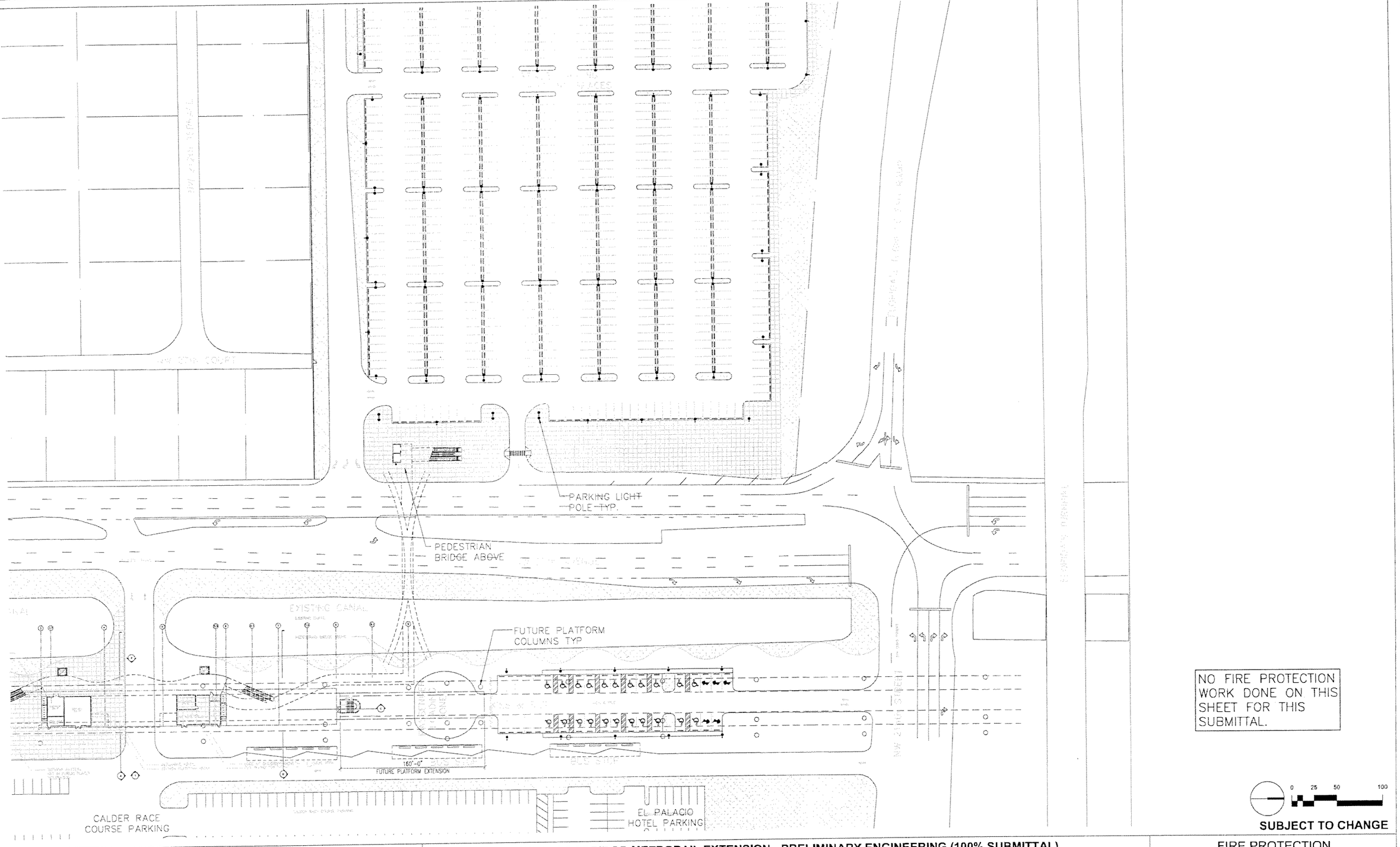

NO FIRE PROTECTION WORK DONE ON THIS SHEET FOR THIS SUBMITTAL.

0 25 50 100

SUBJECT TO CHANGE

G:\550515 North...ridor\NW 215 ST\Mech\Fpro\SHT\FP-27.dwg, 5/12/2006 3:45:12 PM, blindholm

Designed by E.B. Date
Drawn by XX Date
Checked by E.B. Date
Approved by G.V. Date

No.	Date	By	Chk	App.	Revisions

NORTH CORRIDOR METRORAIL EXTENSION - PRELIMINARY ENGINEERING (100% SUBMITTAL)

MIAMI-DADE COUNTY

MIAMI-DADE TRANSIT

PARSONS
7600 CORPORATE CENTER DRIVE, SUITE 500
MIAMI, FLORIDA 33126
PHONE: (786) 464-1000 FAX: (786) 845-7119
CERTIFICATE OF AUTHORIZATION NO. 1838

Approved Date

H.J. ROSS
201 ALHAMBRA CIRCLE SUITE 900
CORAL GABLES, FLORIDA 33134
PHONE: (305) 567-1888 / FAX: (305) 567-1771
407

Approved Date 05-05-06

$DATE$ $TIME$ $FILE$

FIRE PROTECTION

NW 215TH ST. STATION FIRE PROTECTION SITE PLAN

Scale 1" = 100' Drawing FP-27 Sheet 305

G:\550515 Nor...\corridor\NW 215 ST\Mech\Fpro\SHTFP-28.dwg, 5/12/2006 3:45:23 PM, blindholm

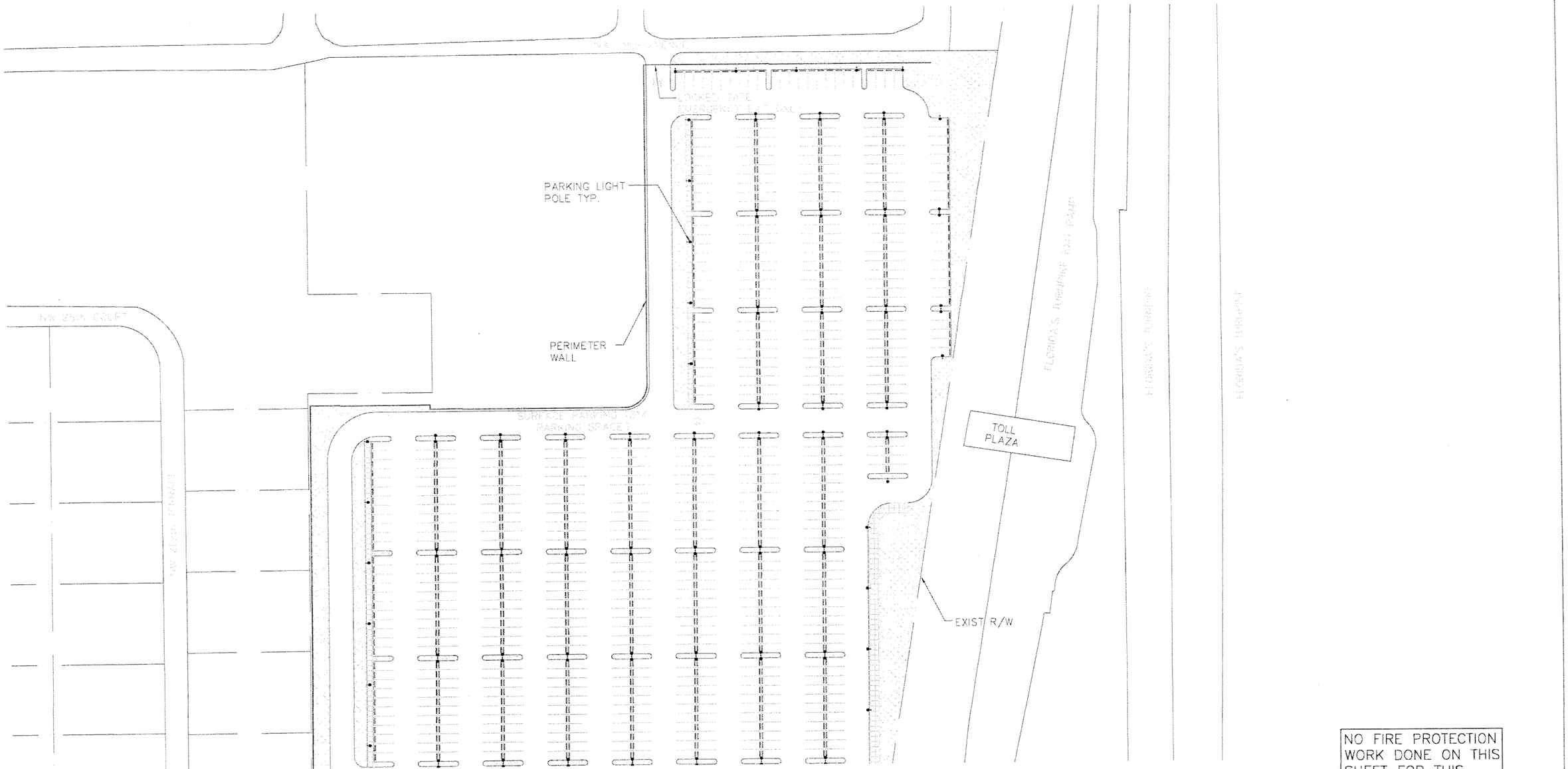

NO FIRE PROTECTION WORK DONE ON THIS SHEET FOR THIS SUBMITTAL.

0 25 50 100

SUBJECT TO CHANGE

Designed by E.B. Date						
Drawn by XX Date						
Checked by E.B. Date						
Approved by G.V. Date	No.	Date	By / Chk	App.	Revisions	

NORTH CORRIDOR METRORAIL EXTENSION - PRELIMINARY ENGINEERING (100% SUBMITTAL)

MIAMI-DADE COUNTY

MIAMI-DADE TRANSIT

PARSONS
7600 CORPORATE CENTER DRIVE, SUITE 500
MIAMI, FLORIDA 33126
PHONE: (786) 464-1000 FAX: (786) 845-7119
CERTIFICATE OF AUTHORIZATION NO. 1838

H.J. ROSS
201 ALHAMBRA CIRCLE SUITE 900
CORAL GABLES, FLORIDA 33134
PHONE: (305) 567-1888 / FAX: (305) 567-1771
407

Approved	Date	Approved	Date 05-05-06	Scale 1"=100'	Drawing FP-28	Sheet 306
			$DATE$ $TIME$ $FILE$			

FIRE PROTECTION

NW 215TH ST. STATION FIRE PROTECTION SITE PLAN-cont'd

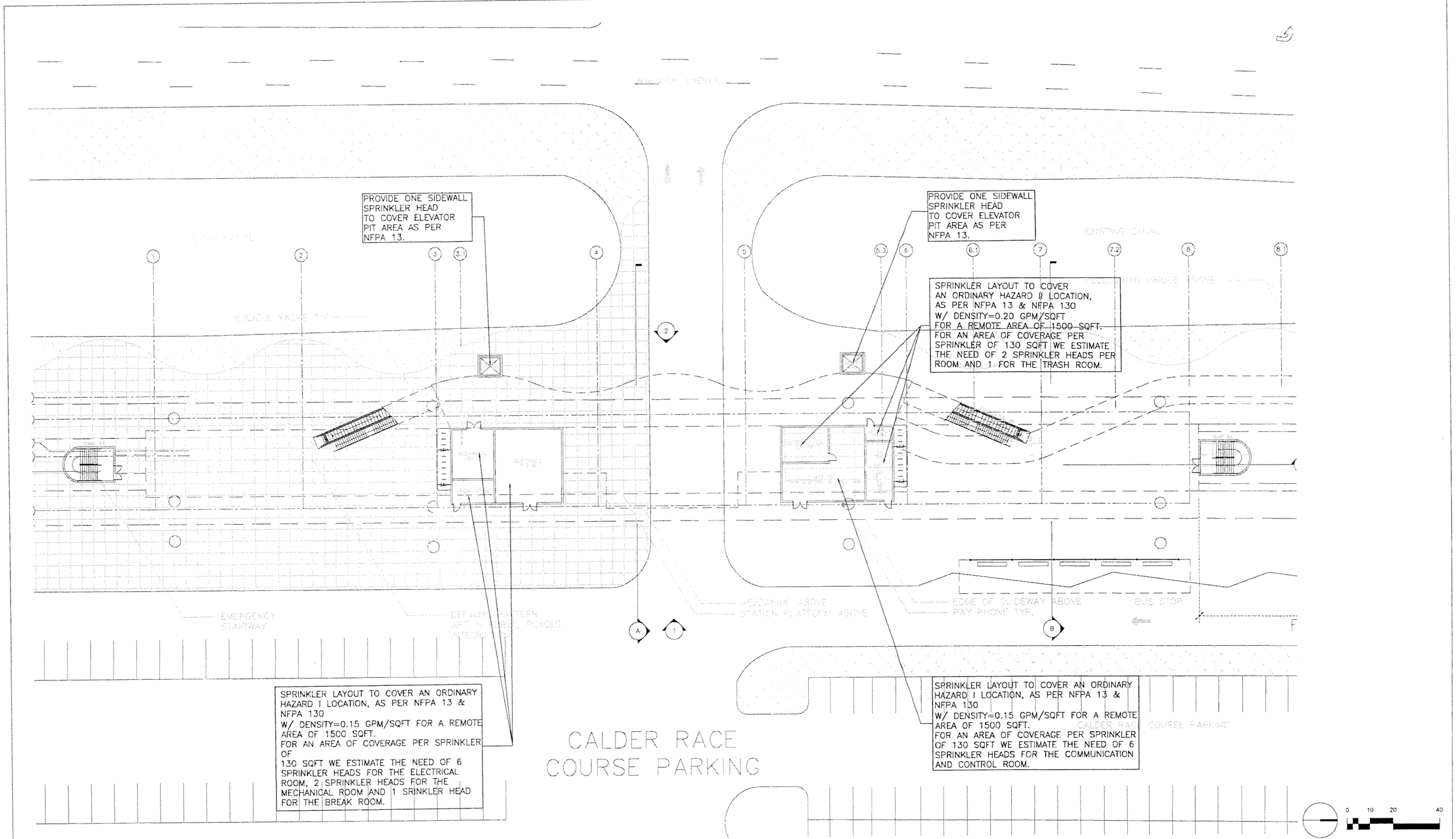

SUBJECT TO CHANGE

G:\550515 North Corridor\NW 215 ST\Mech\Fpro\SHT\FP-29.dwg, 5/12/2006 3:45:33 PM, blindholm

Designed by E.B. Date						
Drawn by XX Date						
Checked by E.B. Date						
Approved by G.V. Date	No.	Date	By / Chk	App.	Revisions	

NORTH CORRIDOR METRORAIL EXTENSION - PRELIMINARY ENGINEERING (100% SUBMITTAL)

MIAMI-DADE COUNTY

MIAMI-DADE TRANSIT

PARSONS
7600 CORPORATE CENTER DRIVE, SUITE 500
MIAMI, FLORIDA 33126
PHONE: (786) 464-1000 FAX: (786) 845-7119
CERTIFICATE OF AUTHORIZATION NO. 1838

H.J. ROSS
201 ALHAMBRA CIRCLE SUITE 900
CORAL GABLES, FLORIDA 33134
PHONE: (305) 567-1888 / FAX: (305) 567-1771
407

Approved | Date | Approved | Date 05-05-06

FIRE PROTECTION

NW 215TH ST. STATION
FIRE PROTECTION
PLAZA LEVEL PLAN

Scale 1"=40' | Drawing FP-29 | Sheet 307

G:\550515 North Corridor\NW 215 ST\Mech\Fpro\SHTFP-30.dwg, 5/12/2006 3:45:41 PM, blindholm

SPRINKLER LAYOUT TO COVER
AN ORDINARY HAZARD II LOCATION,
AS PER NFPA 13 & NFPA 130
W/ DENSITY=0.20 GPM/SQFT
FOR AN AREA OF COVERAGE PER
SPRINKLER OF 130 SQFT WE ESTIMATE
THE NEED OF 1 SPRINKLER HEAD

PROVIDE ONE SIDEWALL
SPRINKLER HEAD PER
ELEVATOR TO COVER
ELEVATORS PIT AREAS
AS PER NFPA 13.

PROVIDE ONE
SPRINKLER HEAD
TO COVER ELEVATOR
SHAFT AREA AS PER
NFPA 13.

PROVIDE ONE
SPRINKLER HEAD
TO COVER ELEVATOR
SHAFT AREA AS PER
NFPA 13.

SPRINKLER LAYOUT TO COVER
AN ORDINARY HAZARD I LOCATION,
AS PER NFPA 13 & NFPA 130
W/ DENSITY=0.15 GPM/SQFT
FOR A REMOTE AREA OF 1500 SQFT.
FOR AN AREA OF COVERAGE PER
SPRINKLER OF 130 SQFT WE ESTIMATE
THE NEED OF 54 SPRINKLER HEADS
IN THE MEZZANINE AREA.
NOTICE THE SPRINKLERS LAYOUT
AROUND THE ESCALATORS WITH A
SEPARATION BETWEEN EACH OTHER
OF 6 FT AS PER CODE(WATER CURTAINS).

SPRINKLER LAYOUT TO COVER
A LIGHT HAZARD LOCATION (RESTROOMS) AS
PER NFPA 13 & NFPA 130
W/ DENSITY=0.10 GPM/SQFT
FOR A REMOTE AREA OF 1500 SQFT.
FOR AN AREA OF COVERAGE PER
SPRINKLER OF 130 SQFT WE ESTIMATE
THE NEED OF 1 SPRINKLER HEAD IN EACH
ROOM.

CALDER RACE COURSE PARKING

0 10 20 40

SUBJECT TO CHANGE

Designed by E.B. Date
Drawn by XX Date
Checked by E.B. Date
Approved by G.V. Date

No.	Date	By / Chk	App.	Revisions

NORTH CORRIDOR METRORAIL EXTENSION - PRELIMINARY ENGINEERING (100% SUBMITTAL)

MIAMI-DADE COUNTY
MIAMI-DADE TRANSIT

PARSONS
7600 CORPORATE CENTER DRIVE, SUITE 500
MIAMI, FLORIDA 33126
PHONE: (786) 464-1000 FAX: (786) 845-7119
CERTIFICATE OF AUTHORIZATION NO. 1838

H.J. ROSS
201 ALHAMBRA CIRCLE SUITE 900
CORAL GABLES, FLORIDA 33134
PHONE: (305) 567-1888 / FAX: (305) 567-1771
407

Approved | Date | Approved | Date 05-05-06 | $DATE$ | $TIME$ | $FILE$

FIRE PROTECTION

NW 215TH ST. STATION
FIRE PROTECTION
MEZZANINE FLOOR PLAN

Scale 1" = 40' | Drawing FP-30 | Sheet 308

PROVIDE ONE SPRINKLER HEAD PER ELEVATOR TO COVER ELEVATORS SHAFT AREAS AS PER NFPA 13.

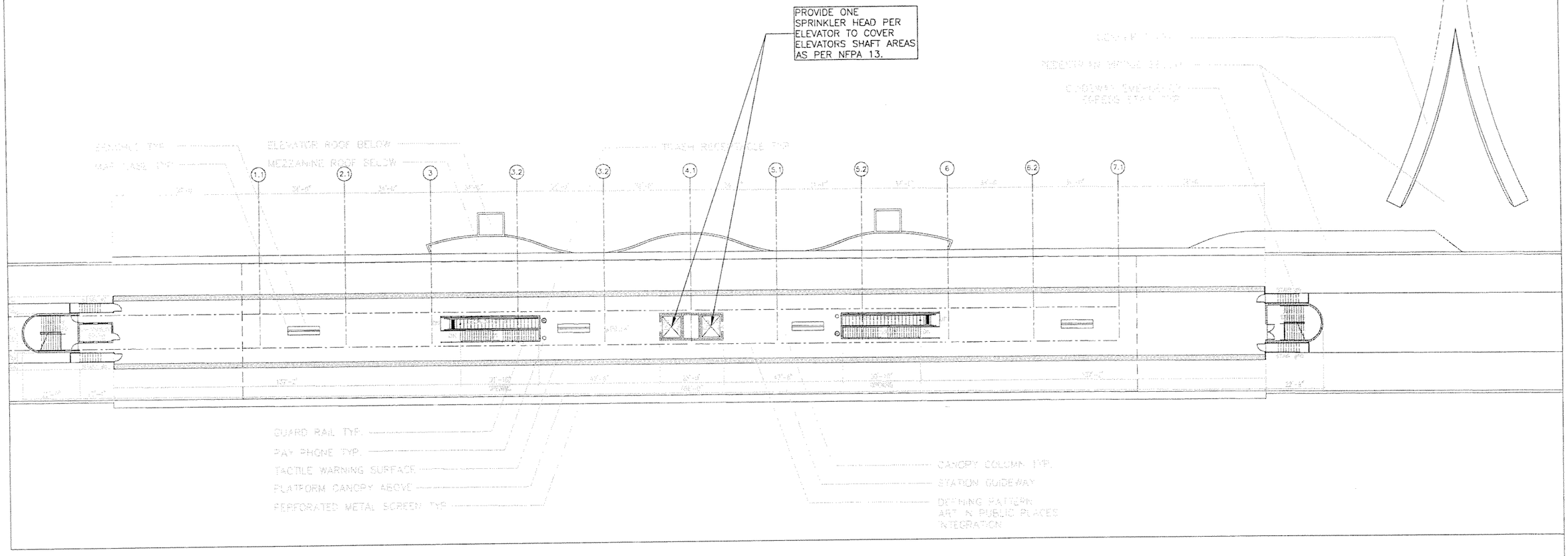

0 10 20 40

SUBJECT TO CHANGE

Designed by E.B. Date
Drawn by XX Date
Checked by E.B. Date
Approved by G.V. Date

No.	Date	By / Chk	App.	Revisions

NORTH CORRIDOR METRORAIL EXTENSION - PRELIMINARY ENGINEERING (100% SUBMITTAL)

MIAMI-DADE COUNTY

MIAMI-DADE TRANSIT

PARSONS
7600 CORPORATE CENTER DRIVE, SUITE 500
MIAMI, FLORIDA 33126
PHONE: (786) 464-1000 FAX: (786) 845-7119
CERTIFICATE OF AUTHORIZATION NO. 1838

H.J. ROSS
201 ALHAMBRA CIRCLE SUITE 900
CORAL GABLES, FLORIDA 33134
PHONE: (305) 567-1888 / FAX: (305) 567-1771
407

Approved | Date | Approved | Date 05-05-06 | $DATE$ | $TIME$ | $FILE$

FIRE PROTECTION

NW 215TH ST. STATION FIRE PROTECTION PLATFORM PLAN

Scale 1" = 40' | Drawing FP-31 | Sheet 309

G:\550515 North Corridor\NW 215 ST\Mech\Pro\SHT\FP-31.dwg, 5/12/2006 3:45:46 PM, blindholm

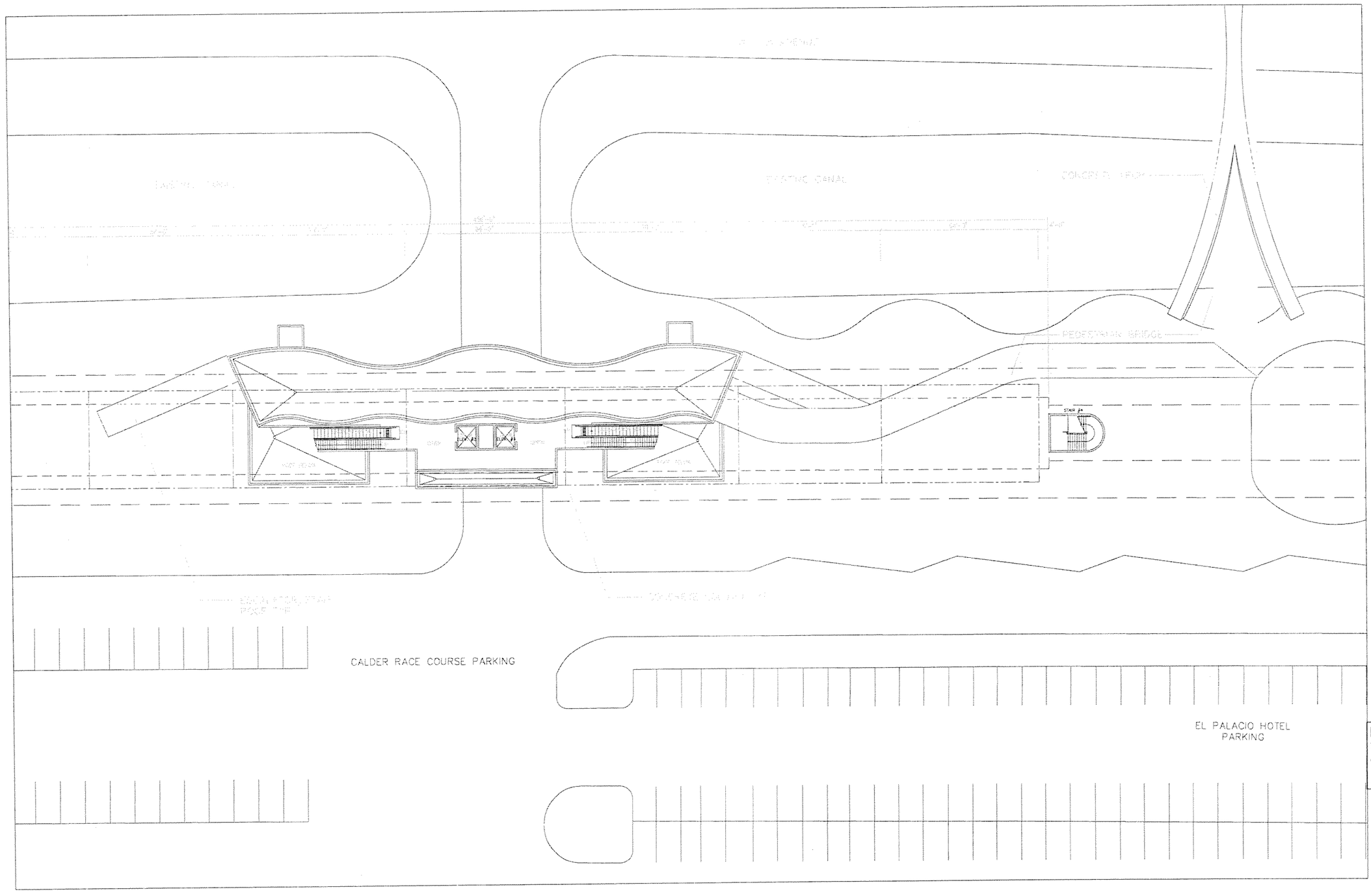

NO FIRE PROTECTION WORK DONE ON THIS SHEET FOR THIS SUBMITTAL.

0 10 20 40

SUBJECT TO CHANGE

G:\550515 Nort..orridor\NW 215 ST\Mech\Fpro\SHT\FP-32.dwg, 5/12/2006 3:45:50 PM, blindholm

Designed by E.B. Date
Drawn by XX Date
Checked by E.B. Date
Approved by G.V. Date

No.	Date	By / Chk	App.	Revisions

NORTH CORRIDOR METRORAIL EXTENSION - PRELIMINARY ENGINEERING (100% SUBMITTAL)

MIAMI-DADE COUNTY

MIAMI-DADE TRANSIT

PARSONS
7600 CORPORATE CENTER DRIVE, SUITE 500
MIAMI, FLORIDA 33126
PHONE: (786) 464-1000 FAX: (786) 845-7119
CERTIFICATE OF AUTHORIZATION NO. 1838

H.J. ROSS
201 ALHAMBRA CIRCLE SUITE 900
CORAL GABLES, FLORIDA 33134
PHONE: (305) 567-1888 / FAX: (305) 567-1771
407

Approved Date

Approved Date 05-05-06

$DATE$ $TIME$ $FILE$

FIRE PROTECTION

NW 215TH ST. STATION FIRE PROTECTION MEZZANINE ROOF PLAN

Scale 1"=40' Drawing FP-32 Sheet 310

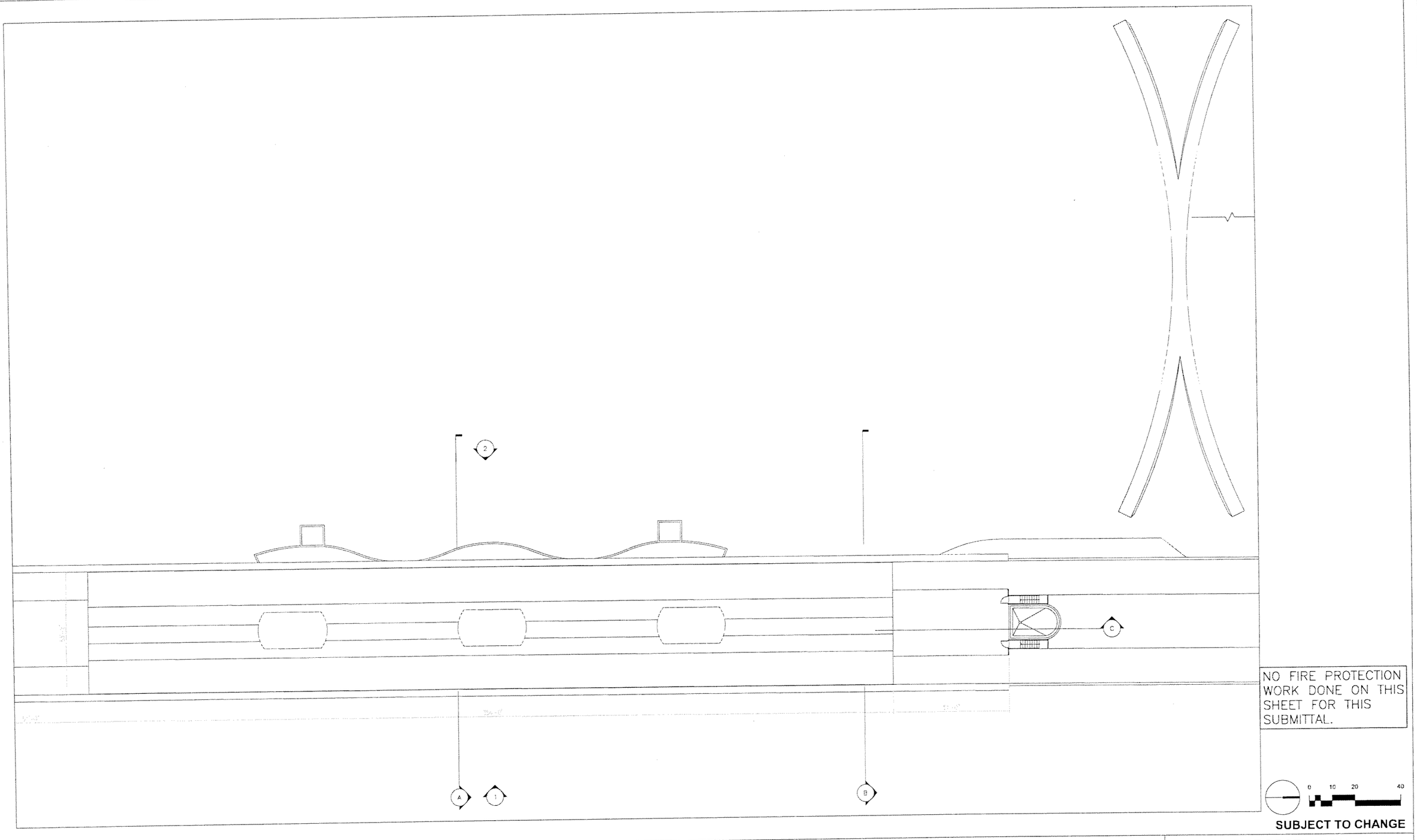

NO FIRE PROTECTION WORK DONE ON THIS SHEET FOR THIS SUBMITTAL.

0 10 20 40

SUBJECT TO CHANGE

G:\550515 North Corridor\NW 215 ST\Mech\Fpro\SHT\FP-33.dwg, 5/12/2006 3:45:56 PM, blindholm

Designed by E.B. Date

Drawn by XX Date

Checked by E.B. Date

Approved by C.V. Date

No.	Date	By	App.	Revisions

NORTH CORRIDOR METRORAIL EXTENSION - PRELIMINARY ENGINEERING (100% SUBMITTAL)

MIAMI-DADE COUNTY

MIAMI-DADE TRANSIT

PARSONS
7600 CORPORATE CENTER DRIVE, SUITE 500
MIAMI, FLORIDA 33126
PHONE: (786) 464-1000 FAX: (786) 845-7119
CERTIFICATE OF AUTHORIZATION NO. 1838

Approved Date

H.J. ROSS
201 ALHAMBRA CIRCLE SUITE 900
CORAL GABLES, FLORIDA 33134
PHONE: (305) 567-1888 / FAX: (305) 567-1771
407

Approved Date 05-05-06

$DATE$ $TIME$ $FILE$

FIRE PROTECTION

NW 215TH ST. STATION FIRE PROTECTION ROOF PLAN

Scale 1"=40' Drawing FP-33 Sheet 31

NOMENCLATURE

A/C	AIR CONDITIONER
ATM	AUTOMATIC TICKET VENDING MACHINE
BL	BLUE LISHT
CCTV	CLOSED CIRCUIT TELEVISION
CSR	CUSTOMER SERVICE REPRESENTATIVE
CTS	CABLE TRANSMISSION SUBSYSTEM
FDP	FIBER DISTRIBUTION PANEL
F/O	FIBER OPTIC CABLE
F & I	FIRE AND INTRUSION
I/O	INPUT/OUTPUT
MDF	MAIN DISTRIBUTION FRAME
OCC	OPERATIONS CONTROL CENTER
OC-XX	SONET OPTICAL CARRIER LEVEL
PA	PUBLIC ADDRESS SYSTEM
PAT	PASSENGER ASSISTANCE TELEPHONE
PAS	PUBLIC ANNOUNCEMENT SYSTEM
PLC	PROGRAMMABLE LOGIC CONTROLLER
SCADA	SUPERVISORY CONTROL AND DATA ACQUISITION
TBD	TO BE DETERMINED
TI	PCM CARRIER SYSTEM 24 VOICE CHANNELS 1.544 Mbps
TPSS	TRACTION POWER SUBSTATION
TVM	TICKET VENDING MACHINE
TWC	TRAIN TO WAYSIDE CONTROL
UPS	UN INTERRUPTIBLE POWER SUPPLY
VMF	VEHICLE MAINTENANCE FACILITY
VMS	VARIABLE MESSAGE SIGN
WAN	WIDE AREA NETWORK

SYMBOLS

- A ⊥ C — AC GROUND
- CIRCUIT BREAKER
- [J] — JUNCTION BOX
- FEEDER BREAKER
- TRANSFORMER
- SWITCH CLOSED
- SWITCH OPEN
- DIVIDED HANDHOLE / PULLBOX
- [TV] — TELEVISION CAMERA
- EARTH GROUND CONNECTION
- CHASSIS GROUND CONNECTION
- [TPSS] — TRACTION POWER SUBSTATION
- [VMS] — VISUAL MESSAGE SIGN
- SPEAKER
- FIBER OPTIC CROSS-CONNECT
- [STATION NAME] — PLATFORM
- FIXED CCTV CAMERA
- PAN, TILT, ZOOM CCTV CAMERA
- [10M] — INTRUSION DETECTION MODULE
- (FD) — FIRE DETECTION AND SUPPRESSION SYSTEM
- PAT — PUBLIC ASSISTANCE TELEPHONE
- BLS — BLUE LIGHT STATION
- S — SERVICE PHONE
- AMBIENT NOISE SENSING MICROPHONE
- [TIS] — TRAIN - IN - STATION LIGHT

JK	4/06						
Designed by	Date						
GK	5/06						
Drawn by	Date						
TT	5/06						
Checked by	Date						
Approved by	Date	No.	Date	By Chk.	App.	Revisions	

NORTH CORRIDOR METRORAIL EXTENSION - PRELIMINARY ENGINEERING (100% SUBMITTAL)

MIAMI-DADE TRANSIT

PARSONS
7600 CORPORATE CENTER DRIVE, SUITE 500
MIAMI, FLORIDA 33126
PHONE: (786) 464-1000 FAX: (786) 845-7119
CERTIFICATE OF AUTHORIZATION NO. 1838

Approved | Date | Approved | Date

SYSTEM COMMUNICATIONS

COMMUNICATIONS SYMBOLS AND NOMENCLATURE

Scale NTS | Drawing SCM-103 | Sheet 312

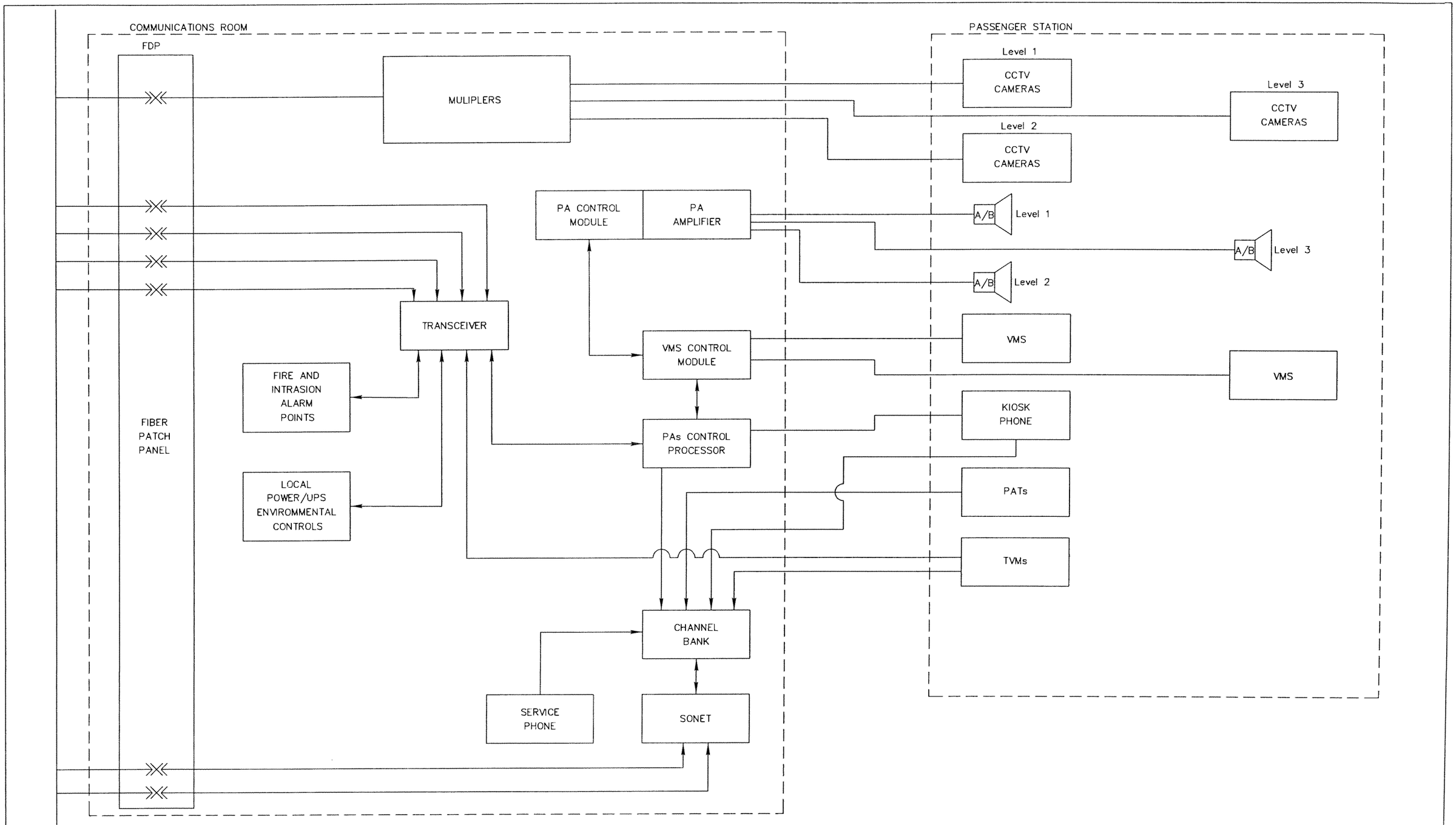

TYPICAL COMMUNICATIONS ROOM – PASSENGER STATION INTERFACE

JK 4/06 Designed By Date						NORTH CORRIDOR METRORAIL EXTENSION - PRELIMINARY ENGINEERING (100% SUBMITTAL)	SYSTEM COMMUNICATIONS
GK 5/06 Drawn By Date						MIAMI-DADE TRANSIT	TYPICAL COMMUNICATIONS ROOM PASSENGER STATION BLOCK DIAGRAM
TT 5/06 Checked By Date						PARSONS 7600 CORPORATE CENTER DRIVE, SUITE 500 MIAMI, FLORIDA 33126 PHONE: (786) 464-1000 FAX: (786) 845-7119 CERTIFICATE OF AUTHORIZATION NO. 1838	Scale NTS Drawing SCM-104 Sheet 313
Approved By Date	No.	Date	By / Chk	App.	Revisions	Approved Date Approved Date	

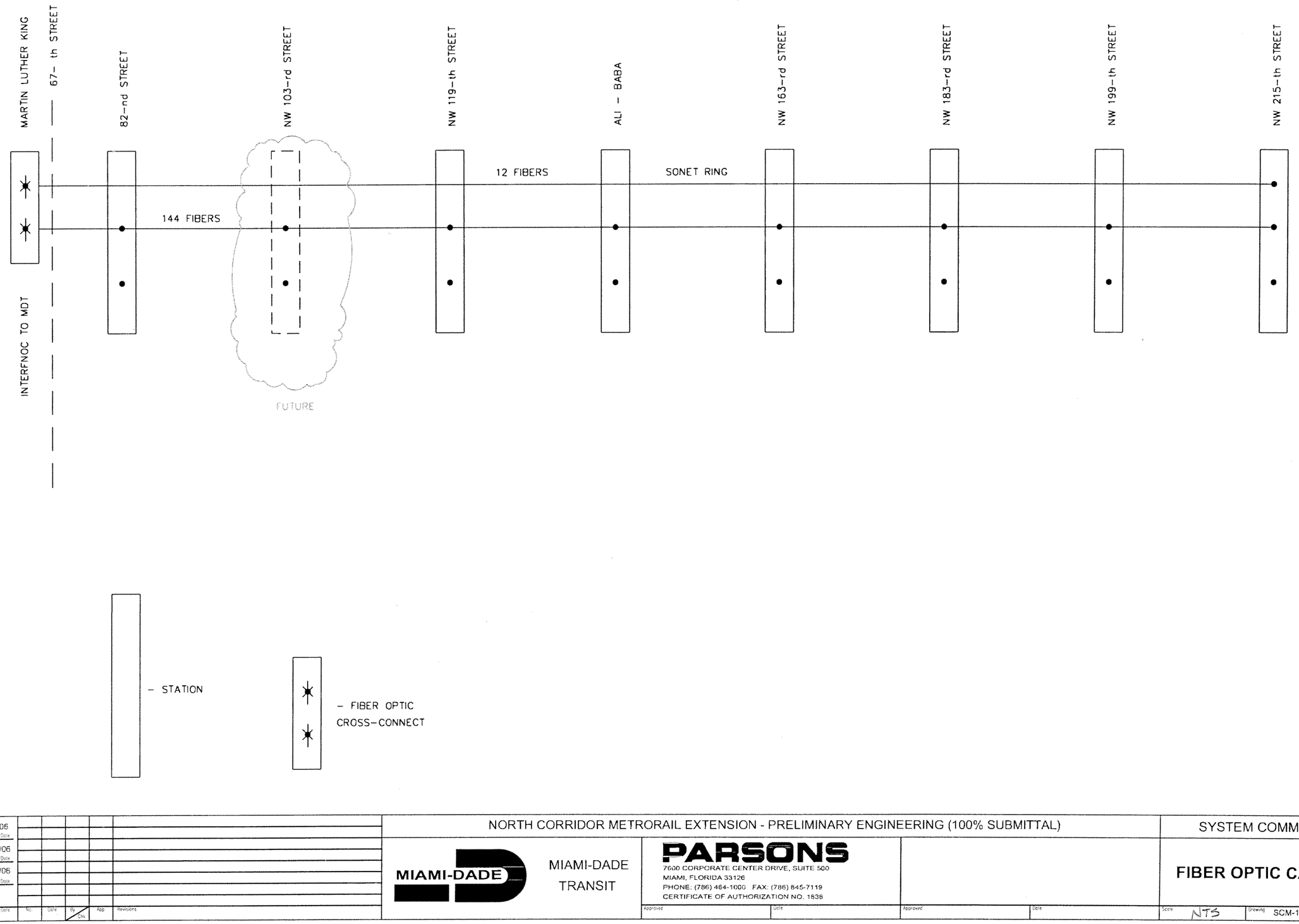

JK Designed by	4/06 Date						
GK Drawn by	5/06 Date						
TT Checked by	5/06 Date						
Approved by	Date	No.	Date	By Chk	App	Revisions	

NORTH CORRIDOR METRORAIL EXTENSION - PRELIMINARY ENGINEERING (100% SUBMITTAL)

SYSTEM COMMUNICATIONS

MIAMI-DADE TRANSIT

PARSONS
7600 CORPORATE CENTER DRIVE, SUITE 500
MIAMI, FLORIDA 33126
PHONE: (786) 464-1000 FAX: (786) 845-7119
CERTIFICATE OF AUTHORIZATION NO. 1838

Approved | Date | Approved | Date

FIBER OPTIC CABLE PLANT

Scale NTS | Drawing SCM-106 | Sheet 314

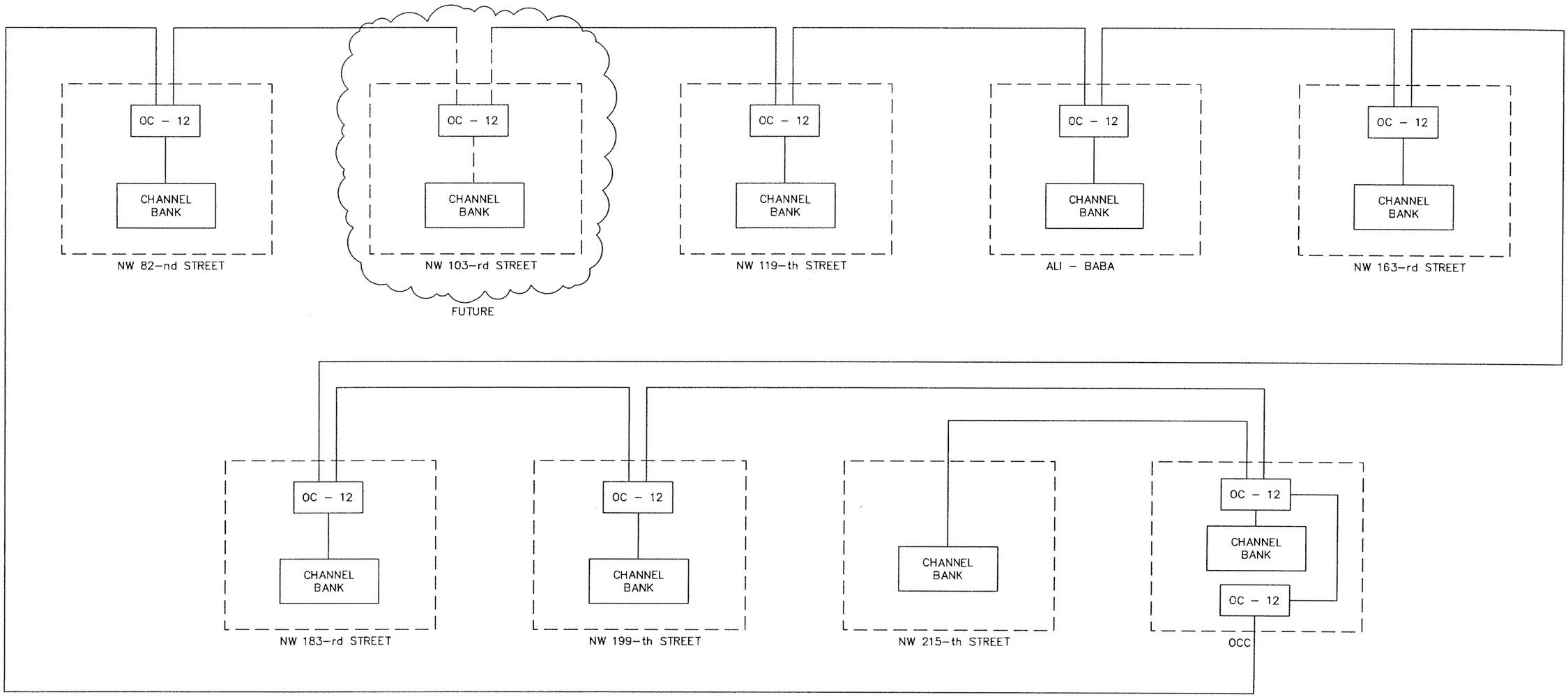

JK Designed by	4/06 Date					NORTH CORRIDOR METRORAIL EXTENSION - PRELIMINARY ENGINEERING (100% SUBMITTAL)	SYSTEM COMMUNICATIONS
GK Drawn by	5/06 Date					MIAMI-DADE TRANSIT	**SONET SINGLE LINE DIAGRAM**
TT Checked by	5/06 Date					PARSONS 7600 CORPORATE CENTER DRIVE, SUITE 500 MIAMI, FLORIDA 33126 PHONE: (786) 464-1000 FAX: (786) 845-7119 CERTIFICATE OF AUTHORIZATION NO. 1838	
Approved by	Date	No.	Date	By CNA	App.	Revisions	Approved / Date / Approved / Date / Scale NTS / Drawing SCM-107 / Sheet 315

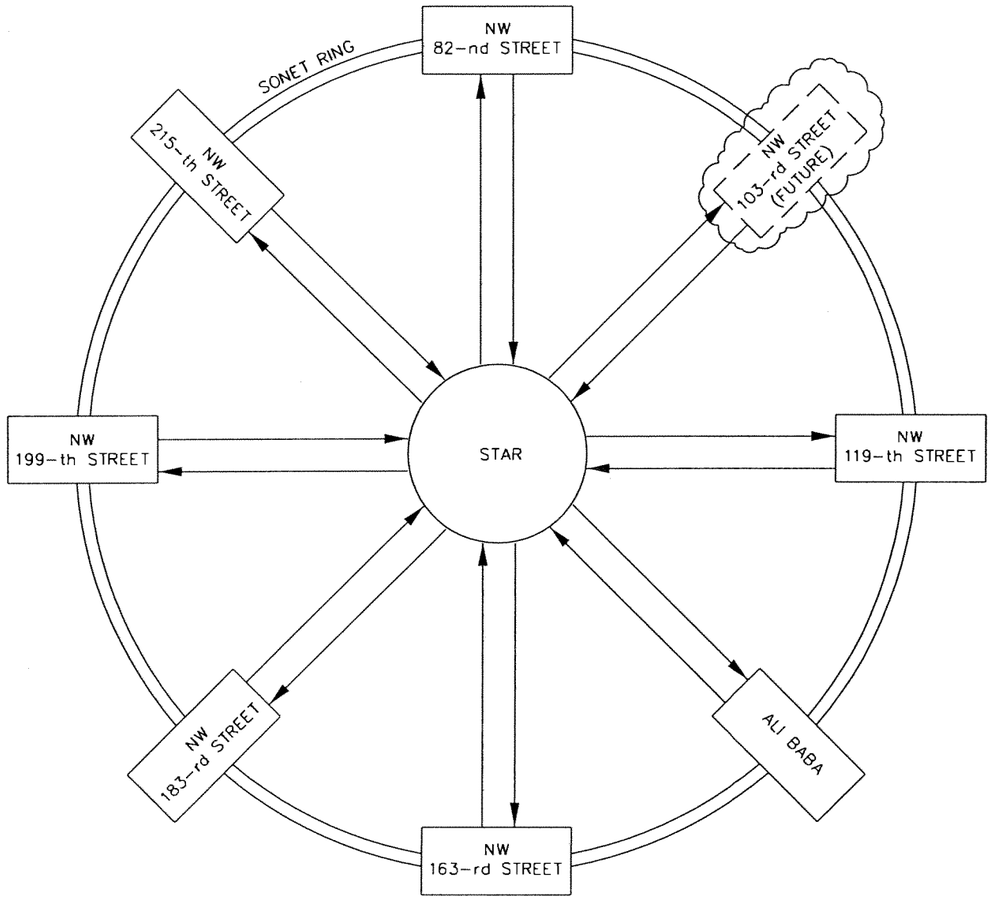

JK Designed by	4/06 Date						NORTH CORRIDOR METRORAIL EXTENSION - PRELIMINARY ENGINEERING (100% SUBMITTAL)		SYSTEM COMMUNICATIONS
GK Drawn by	5/06 Date						MIAMI-DADE TRANSIT	PARSONS 7600 CORPORATE CENTER DRIVE, SUITE 500 MIAMI, FLORIDA 33126 PHONE: (786) 464-1000 FAX: (786) 845-7119 CERTIFICATE OF AUTHORIZATION NO. 1838	NETWORK LAYOUT
TT Checked by	5/06 Date								
Approved by	Date	No.	Date	By / Chk	App.	Revisions	Approved	Date	Approved	Date	Scale NTS	Drawing SCM-108	Sheet 316

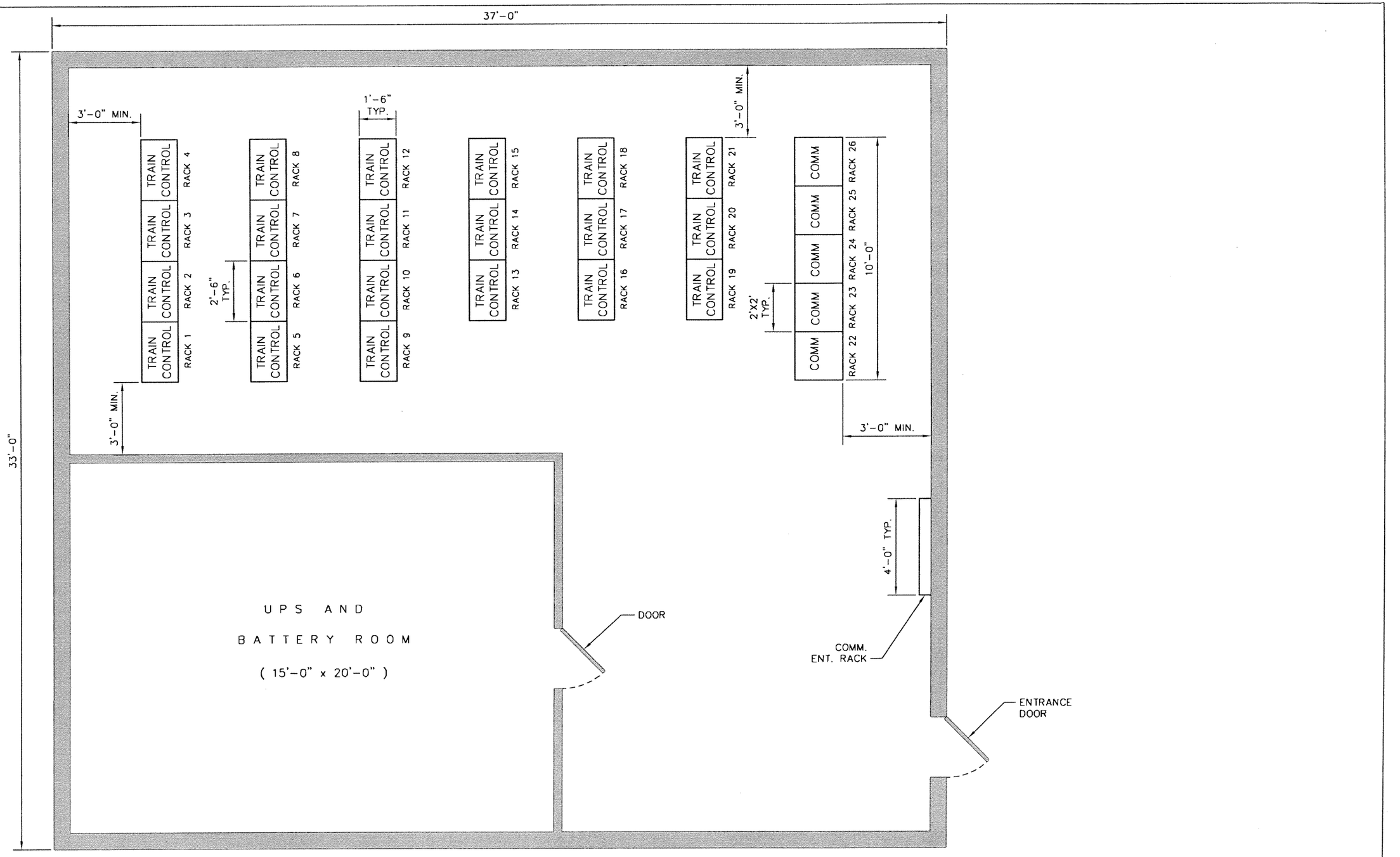

JK	4/06					
Designed by	Date					
GK	5/06					
Drawn by	Date					
TT	5/06					
Checked by	Date					
Approved by	Date	No.	Date	By / CHK	App	Revisions

NORTH CORRIDOR METRORAIL EXTENSION - PRELIMINARY ENGINEERING (100% SUBMITTAL)

SYSTEM COMMUNICATIONS

MIAMI-DADE TRANSIT

PARSONS
7600 CORPORATE CENTER DRIVE, SUITE 500
MIAMI, FLORIDA 33126
PHONE: (786) 464-1000 FAX: (786) 845-7119
CERTIFICATE OF AUTHORIZATION NO. 1838

Approved | Date | Approved | Date

TYPICAL TRAIN CONTROL / COMMUNICATIONS EQUIPMENT LAYOUT

Scale NTS | Drawing SCM-109 | Sheet 317

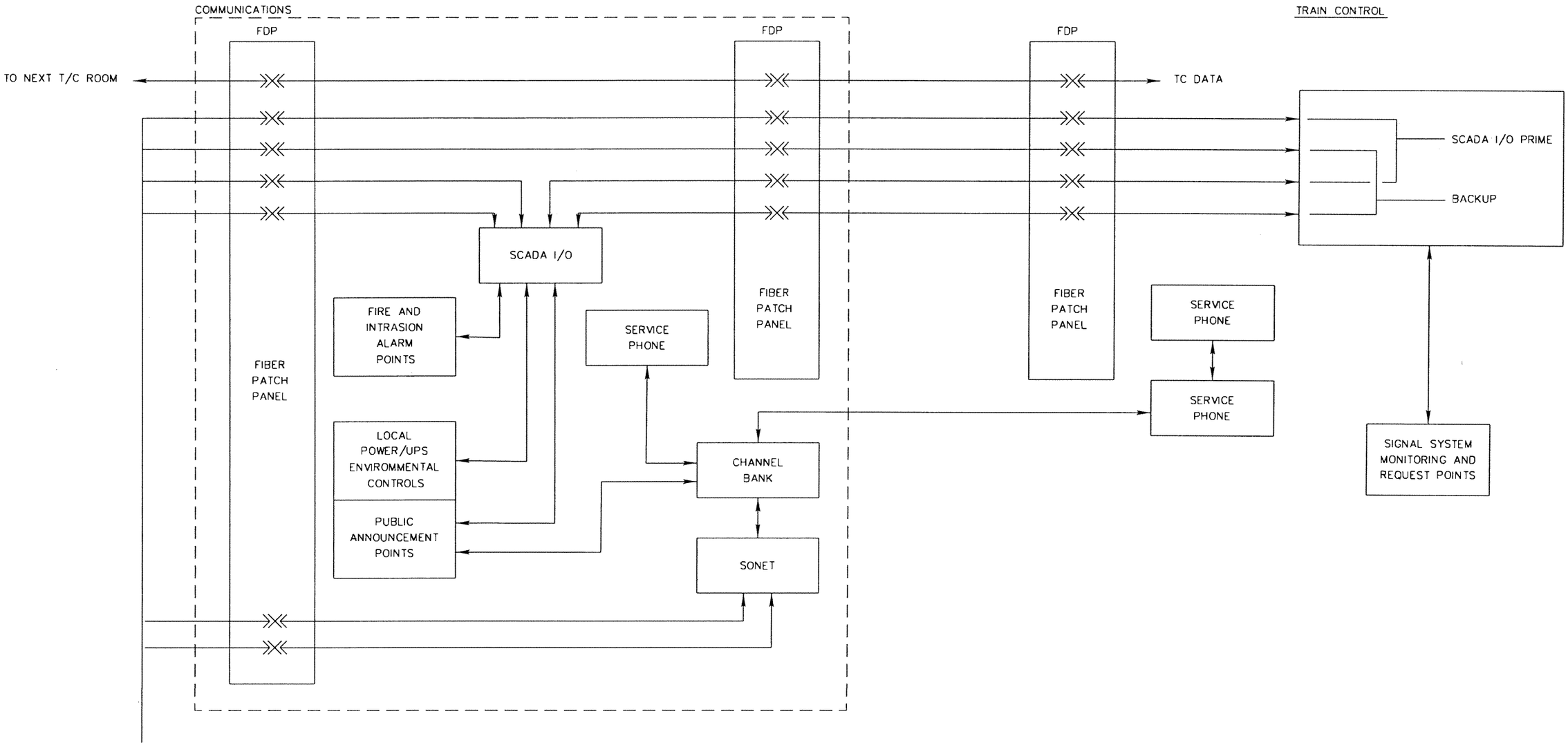

TYPICAL COMMUNICATIONS / SIGNAL ROOM INTERFACES

JK Designed By	4/06 Date					NORTH CORRIDOR METRORAIL EXTENSION - PRELIMINARY ENGINEERING (100% SUBMITTAL)		SYSTEM COMMUNICATIONS	
GK Drawn By	5/06 Date					MIAMI-DADE TRANSIT	PARSONS 7600 CORPORATE CENTER DRIVE, SUITE 500 MIAMI, FLORIDA 33126 PHONE: (786) 464-1000 FAX: (786) 845-7119 CERTIFICATE OF AUTHORIZATION NO. 1838	FUNCTIONAL BLOCK DIAGRAM TRAIN CONTROL / COMMUNICATION INTERFACE	
TT Checked By	5/06 Date								
Approved By	Date	No.	Date	By / Chk.	App.	Revisions	Approved / Date	Approved / Date	Scale NTS / Drawing SCM-110 / Sheet 318

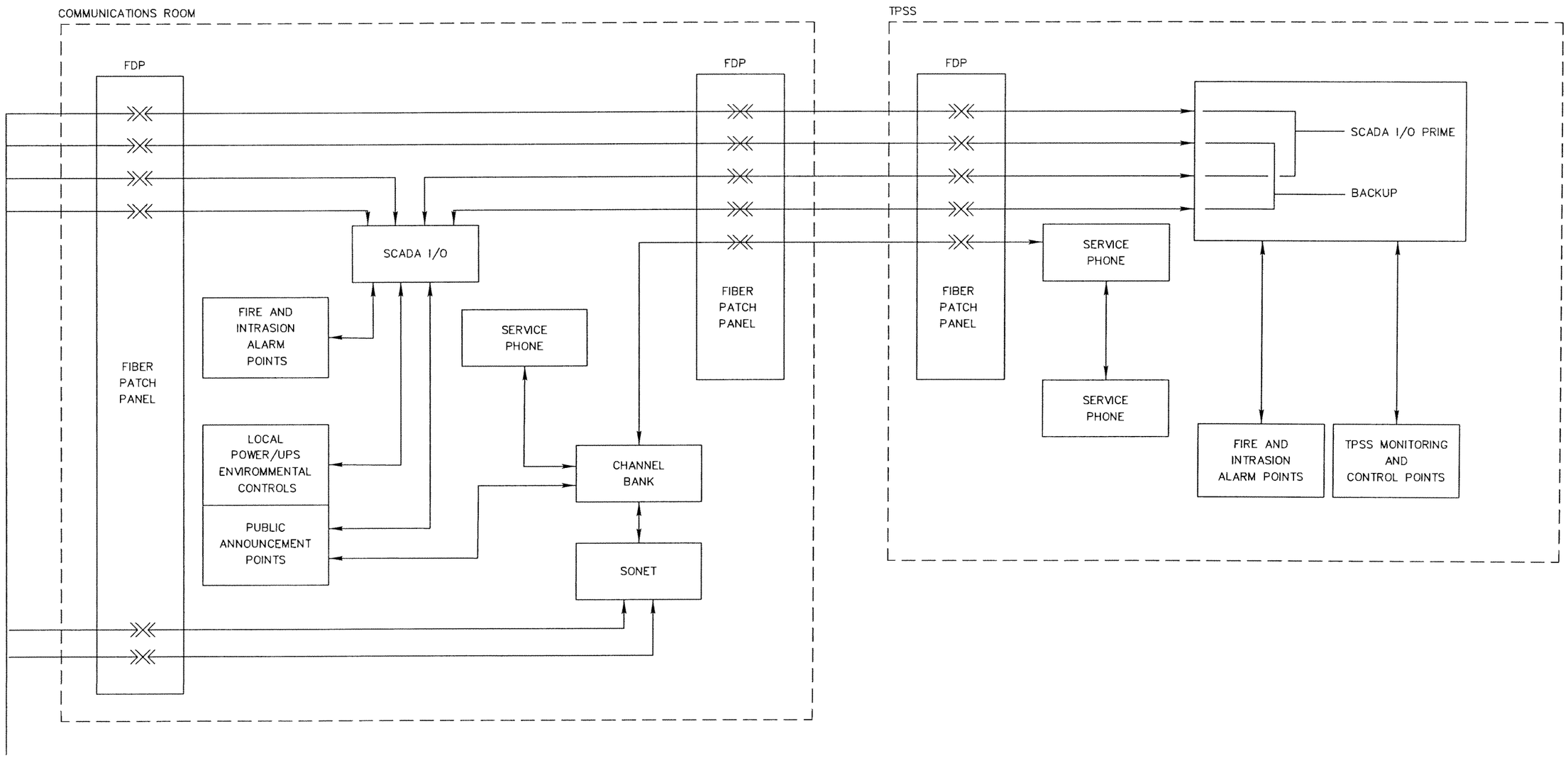

TYPICAL COMMUNICATIONS ROOM – TPSS INTERFACE

JK Designed by	4/06 Date					
GK Drawn by	5/06 Date					
TT Checked by	5/06 Date					
Approved by	Date	No.	Date	By / Chk.	App.	Revisions

NORTH CORRIDOR METRORAIL EXTENSION - PRELIMINARY ENGINEERING (100% SUBMITTAL)

MIAMI-DADE TRANSIT

PARSONS
7600 CORPORATE CENTER DRIVE, SUITE 500
MIAMI, FLORIDA 33126
PHONE: (786) 464-1000 FAX: (786) 845-7119
CERTIFICATE OF AUTHORIZATION NO. 1838

Approved | Date | Approved | Date

SYSTEM COMMUNICATIONS

TYPICAL COMMUNICATIONS ROOM / TPSS INTERFACES

Scale NTS | Drawing SCM-111 | Sheet 319

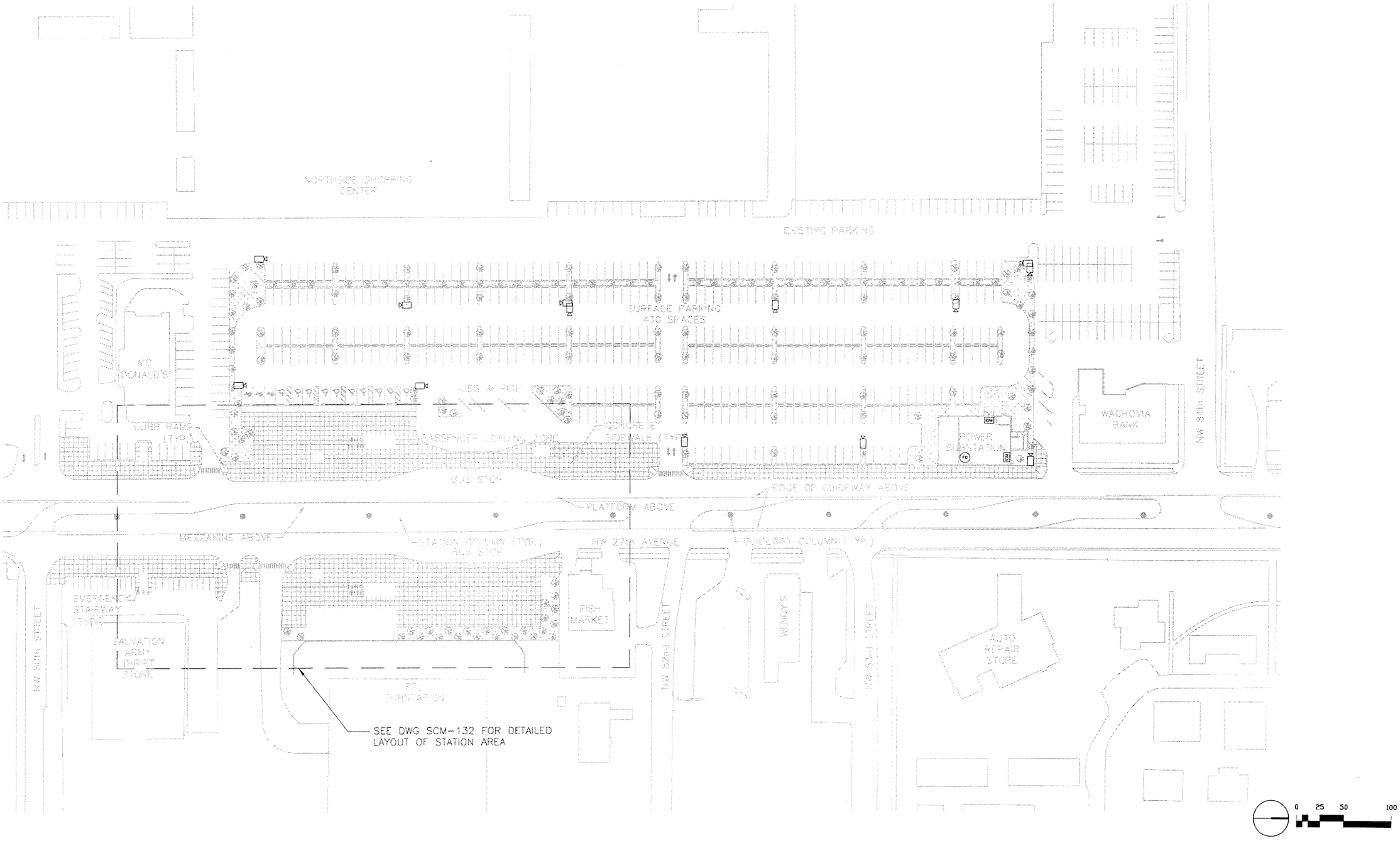

ML	4/06	1				60% PROGRESS SET
Designed by	Date	2				70% PROGRESS SET
GK	5/06					
Drawn by	Date					
ML	5/06					
Checked by	Date					
Approved by	Date	No.	Date	By / Chk	Acc.	Revisions

NORTH CORRIDOR METRORAIL EXTENSION - PRELIMINARY ENGINEERING (100% SUBMITTAL)

MIAMI-DADE TRANSIT

PARSONS
7600 CORPORATE CENTER DRIVE, SUITE 500
MIAMI, FLORIDA 33126
PHONE: (786) 464-1000 FAX: (786) 845-7119
CERTIFICATE OF AUTHORIZATION NO. 1838

EARTHTECH
Transportation Services
architecture ? engineering ? construction
3750 NW 87th Avenue, Suite 300
Miami, Florida 33178-2430
CERTIFICATE OF AUTHORIZATION NO. 8115
REGISTRATION # AA26000687

Approved | Date | Approved | Date

PASSENGER STATIONS

NW 82ND ST. STATION CCTV, F&I DEVICE LOCATIONS SITE PLAN

Scale 1" = 100' | Drawing SCM-131 | Sheet 320

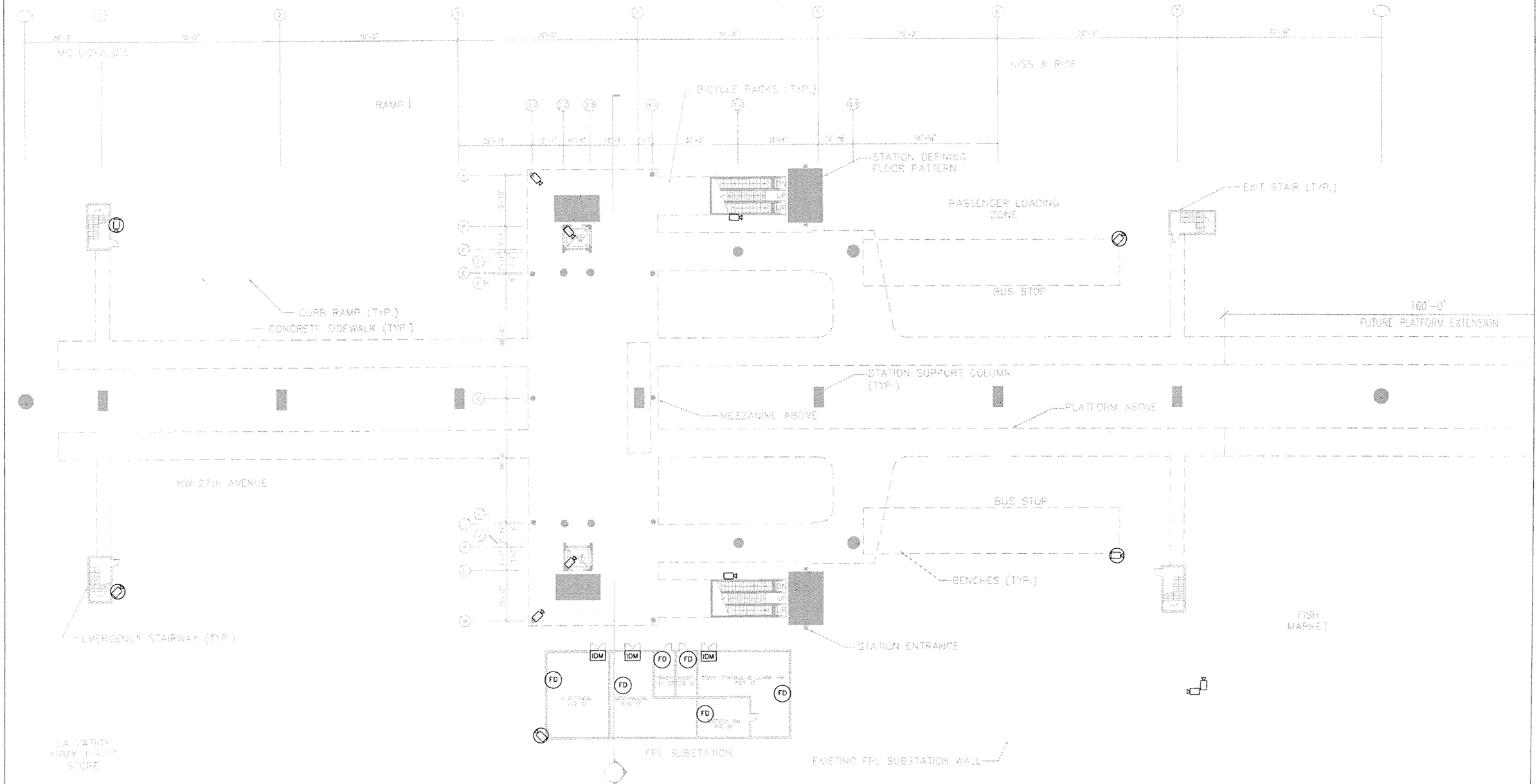

ML	4/06	1					60% PROGRESS SET
Designed by	Date	2					70% PROGRESS SET
GK	5/06						
Drawn by	Date						
ML	5/06						
Checked by	Date						
Approved by	Date	No.	Date	By / Chk.	App.	Revisions	

NORTH CORRIDOR METRORAIL EXTENSION - PRELIMINARY ENGINEERING (100% SUBMITTAL)

MIAMI-DADE TRANSIT

PARSONS
7600 CORPORATE CENTER DRIVE, SUITE 500
MIAMI, FLORIDA 33126
PHONE: (786) 464-1000 FAX: (786) 845-7119
CERTIFICATE OF AUTHORIZATION NO. 1838

Approved | Date

EARTH TECH
Transportation Services
architecture ? engineering ? construction
3750 NW 87th Avenue, Suite 300
Miami, Florida 33178-2430
CERTIFICATE OF AUTHORIZATION NO. 8115
REGISTRATION # AA26000697

Approved | Date

PASSENGER STATIONS

NW 82ND ST. STATION CCTV, F&I DEVICE LOCATIONS PLAZA LEVEL PLAN

Scale 1"=40' | Drawing SCM-132 | Sheet 321

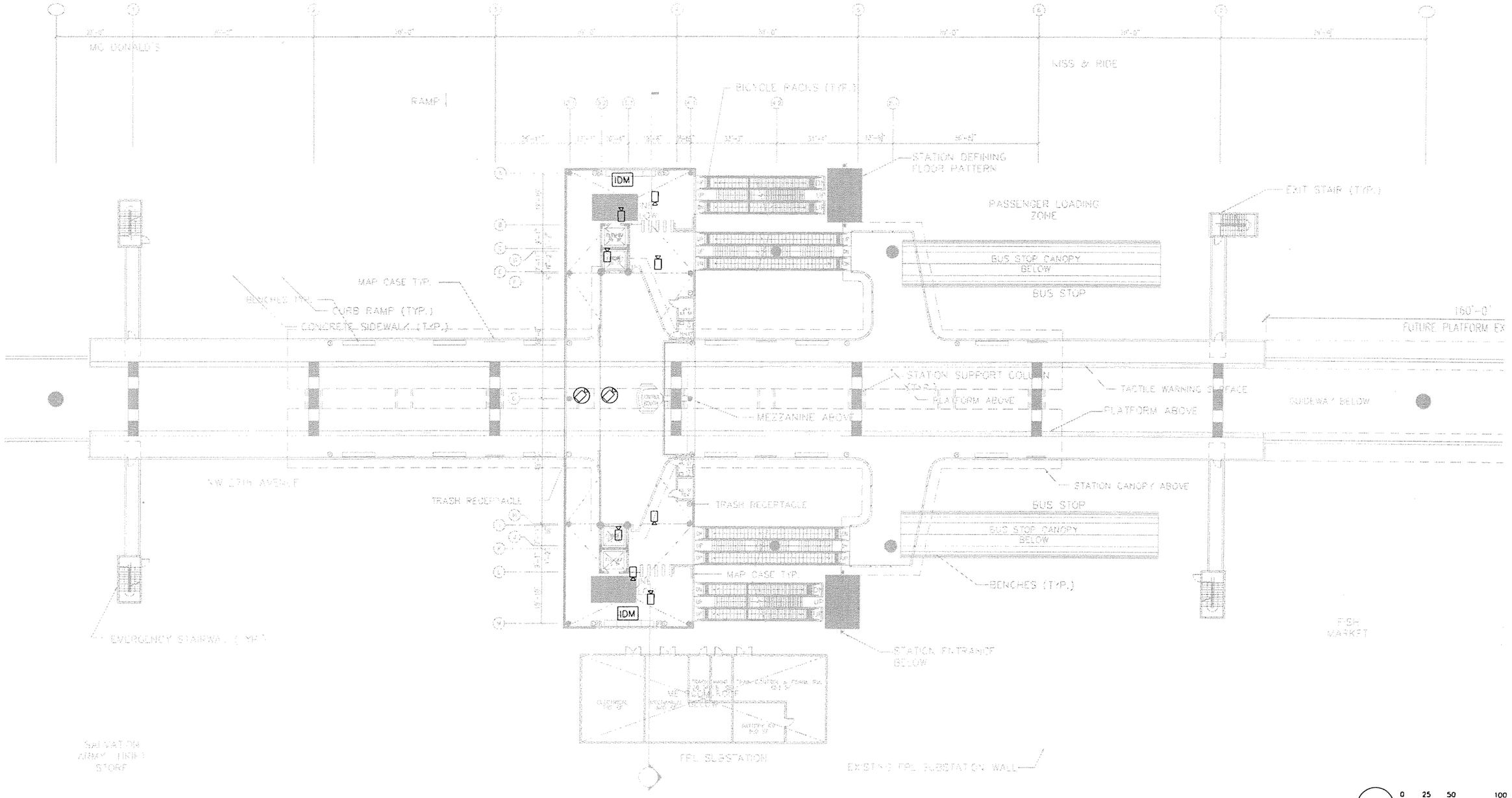

ML	4/06	1				60% PROGRESS SET	
Designed by	Date	2				70% PROGRESS SET	
GK	5/06						
Drawn by	Date						
ML	5/06						
Checked by	Date						
Approved by	Date	No.	Date	By / Chk	App	Revisions	

NORTH CORRIDOR METRORAIL EXTENSION - PRELIMINARY ENGINEERING (100% SUBMITTAL)

MIAMI-DADE TRANSIT

PARSONS
7600 CORPORATE CENTER DRIVE, SUITE 500
MIAMI, FLORIDA 33126
PHONE: (786) 464-1000 FAX: (786) 845-7119
CERTIFICATE OF AUTHORIZATION NO. 1838
Approved / Date

EARTHTECH
Transportation Services
architecture ? engineering ? construction
3750 NW 87th Avenue, Suite 300
Miami, Florida 33178-2430
CERTIFICATE OF AUTHORIZATION NO. 8115
REGISTRATION # AA26000667
Approved / Date

PASSENGER STATIONS

NW 82ND ST. STATION CCTV, F&I DEVICE LOCATIONS MEZZANINE LEVEL PLAN

Scale 1" = 100' | Drawing SCM-133 | Sheet 322

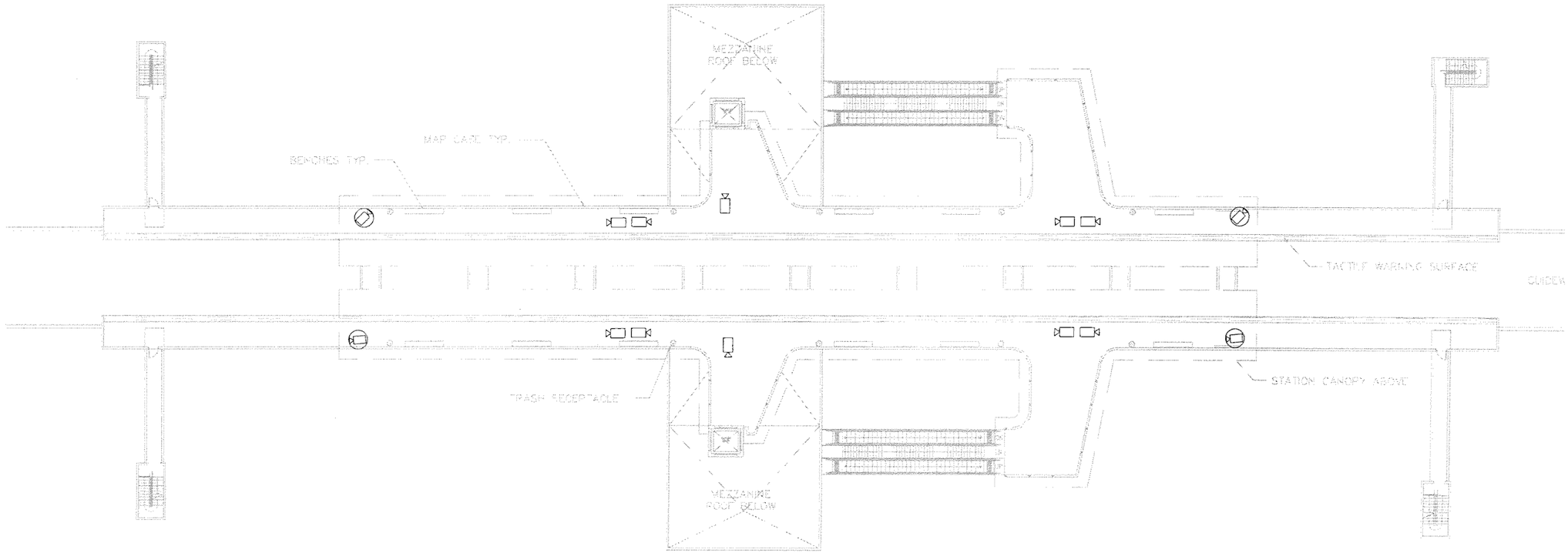

0 25 50 100

ML Designed by	4/06 Date	1				60% PROGRESS SET
GK Drawn by	5/06 Date	2				70% PROGRESS SET
ML Checked by	5/06 Date					
Approved by	Date	No.	Date	By / Chk	App.	Revisions

NORTH CORRIDOR METRORAIL EXTENSION - PRELIMINARY ENGINEERING (100% SUBMITTAL)

MIAMI-DADE TRANSIT

PARSONS
7600 CORPORATE CENTER DRIVE, SUITE 500
MIAMI, FLORIDA 33126
PHONE: (786) 464-1000 FAX: (786) 845-7119
CERTIFICATE OF AUTHORIZATION NO. 1838
Approved Date

EARTHTECH
Transportation Services
architecture ? engineering ? construction
3750 NW 87th Avenue, Suite 300
Miami, Florida 33178-2430
CERTIFICATE OF AUTHORIZATION NO. 9115
REGISTRATION # AA26000807
Approved Date

PASSENGER STATIONS

NW 82ND ST. STATION
CCTV, F&I DEVICE LOCATIONS
PLATFORM LEVEL PLAN

Scale 1" = 100' | Drawing SCM-134 | Sheet 323

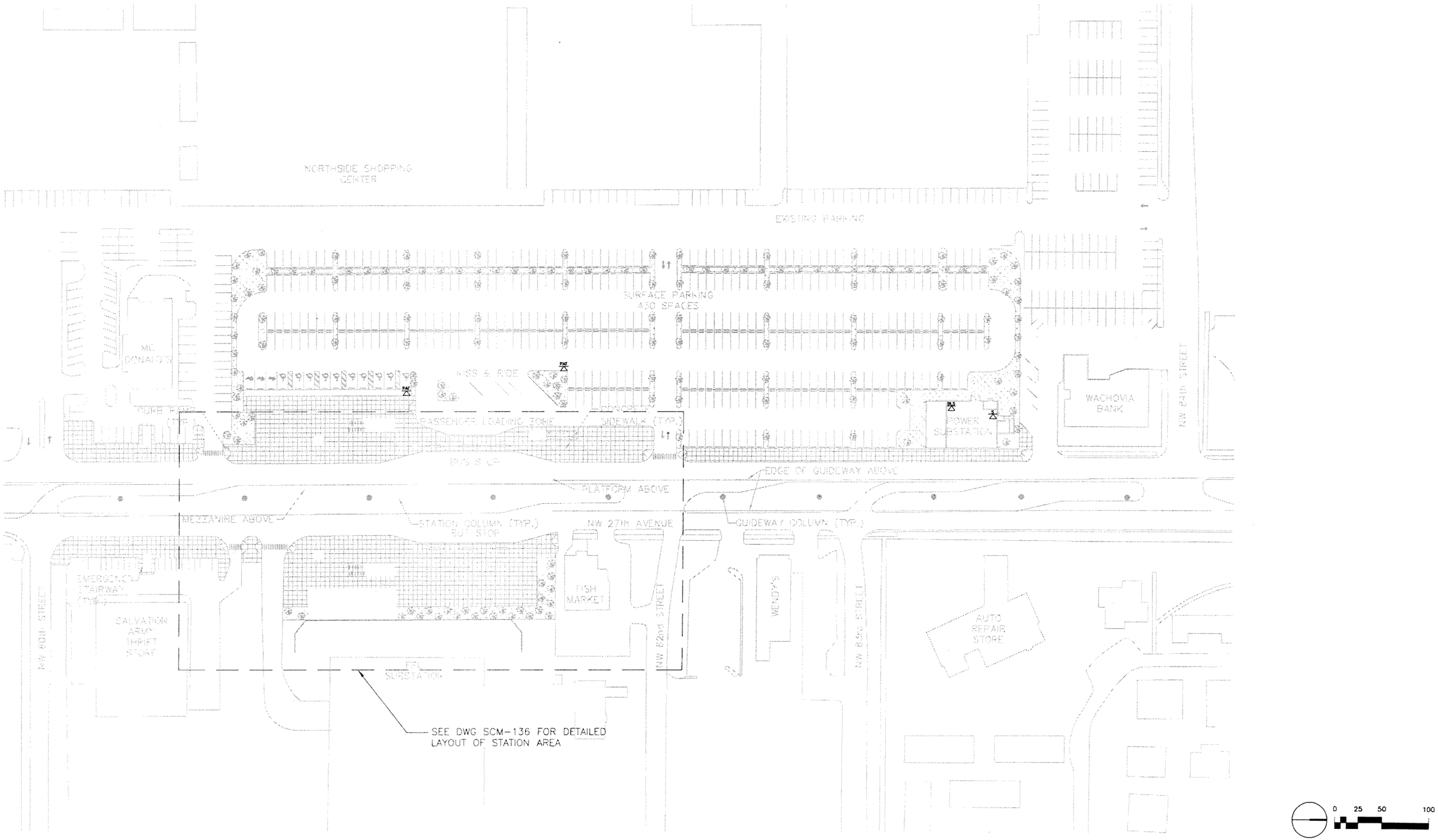

ML	4/06	1				60% PROGRESS SET	
Designed by	Date	2				70% PROGRESS SET	
GK	5/06						
Drawn by	Date						
ML	5/06						
Checked by	Date						
Approved by	Date	No.	Date	By / Chk.	App.	Revisions	

NORTH CORRIDOR METRORAIL EXTENSION - PRELIMINARY ENGINEERING (100% SUBMITTAL)

MIAMI-DADE TRANSIT

PARSONS
7600 CORPORATE CENTER DRIVE, SUITE 500
MIAMI, FLORIDA 33126
PHONE: (786) 464-1000 FAX: (786) 845-7119
CERTIFICATE OF AUTHORIZATION NO. 1838

EARTHTECH
Transportation Services
architecture ? engineering ? construction
3750 NW 87th Avenue, Suite 500
Miami, Florida 33178-2430
CERTIFICATE OF AUTHORIZATION NO. 8115
REGISTRATION # AA26000697

Approved | Date | Approved | Date

PASSENGER STATIONS

NW 82ND ST. STATION PHONE AND BLS LOCATIONS SITE PLAN

Scale 1" = 100' | Drawing SCM-135 | Sheet 324

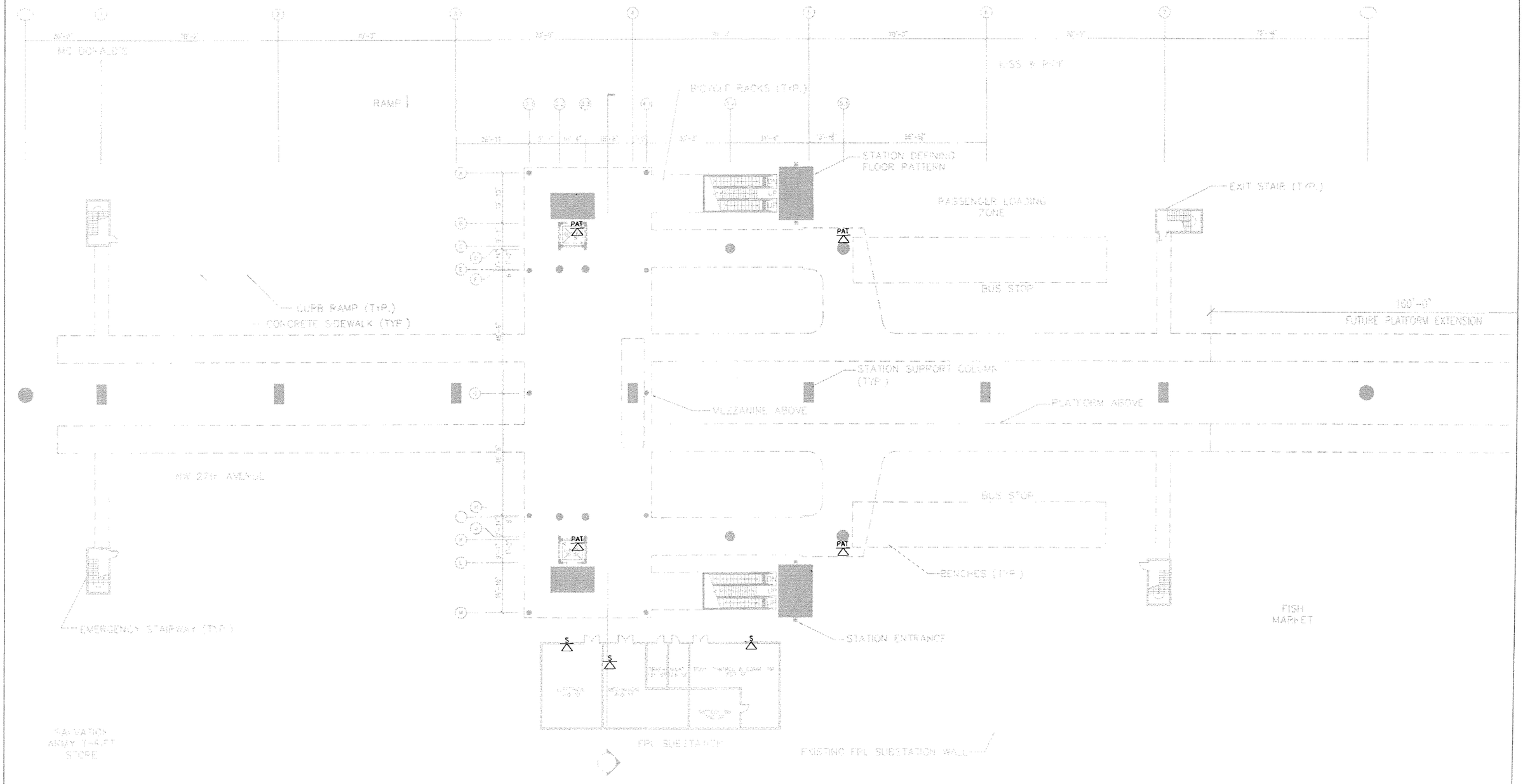

ML 4/06 Designed by Date	1					60% PROGRESS SET
GK 5/06 Drawn by Date	2					70% PROGRESS SET
ML 5/06 Checked by Date						
Approved by Date	No	Date	By / Chk	App		Revisions

NORTH CORRIDOR METRORAIL EXTENSION - PRELIMINARY ENGINEERING (100% SUBMITTAL)

MIAMI-DADE TRANSIT

PARSONS
7600 CORPORATE CENTER DRIVE, SUITE 500
MIAMI, FLORIDA 33126
PHONE: (786) 464-1000 FAX: (786) 845-7119
CERTIFICATE OF AUTHORIZATION NO. 1838
Approved Date

EARTH TECH
Transportation Services
architecture ? engineering ? construction
3750 NW 87th Avenue, Suite 300
Miami, Florida 33178-2428
CERTIFICATE OF AUTHORIZATION NO. 8115
REGISTRATION # AA26000687
Approved Date

PASSENGER STATIONS

NW 82ND ST. STATION PHONE AND BLS LOCATIONS PLAZA LEVEL PLAN

Scale 1" = 40' Drawing SCM-136 Sheet 325

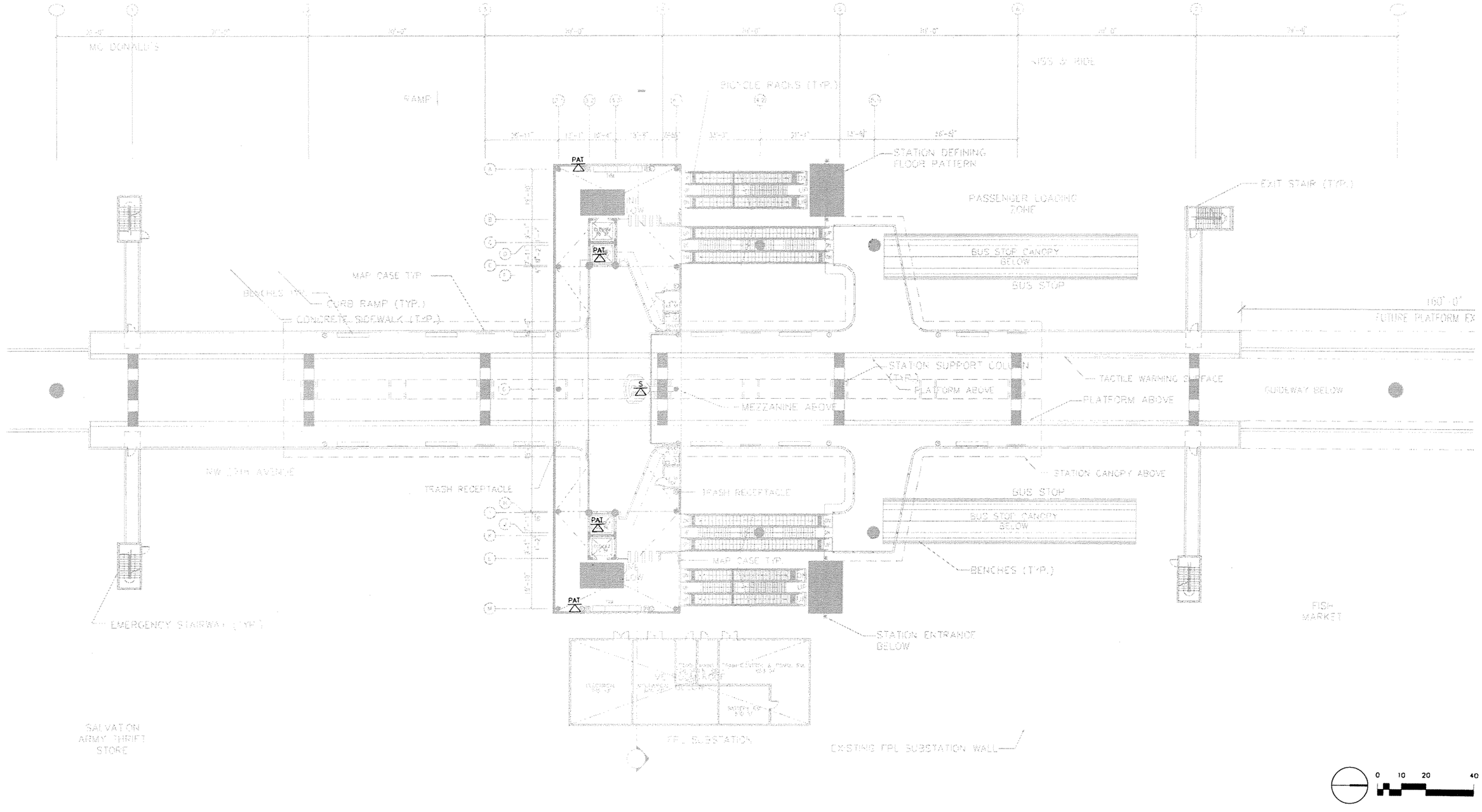

ML	4/06	1				60% PROGRESS SET
Designed by	Date	2				70% PROGRESS SET
GK	5/06					
Drawn by	Date					
ML	5/06					
Checked by	Date					
Approved by	Date	No.	Date	By / Chk	App.	Revisions

NORTH CORRIDOR METRORAIL EXTENSION - PRELIMINARY ENGINEERING (100% SUBMITTAL)

MIAMI-DADE TRANSIT

PARSONS
7600 CORPORATE CENTER DRIVE, SUITE 500
MIAMI, FLORIDA 33126
PHONE: (786) 464-1000 FAX: (786) 845-7119
CERTIFICATE OF AUTHORIZATION NO. 1638

EARTHTECH
Transportation Services
architecture ? engineering ? construction
2750 NW 87th Avenue, Suite 300
Miami, Florida 33178-2430
CERTIFICATE OF AUTHORIZATION NO. 8115
REGISTRATION # AA26000067

Approved | Date | Approved | Date

PASSENGER STATIONS

NW 82ND ST. STATION PHONE AND BLS LOCATIONS MEZZANINE LEVEL PLAN

Scale 1" = 40' | Drawing SCM-137 | Sheet 326

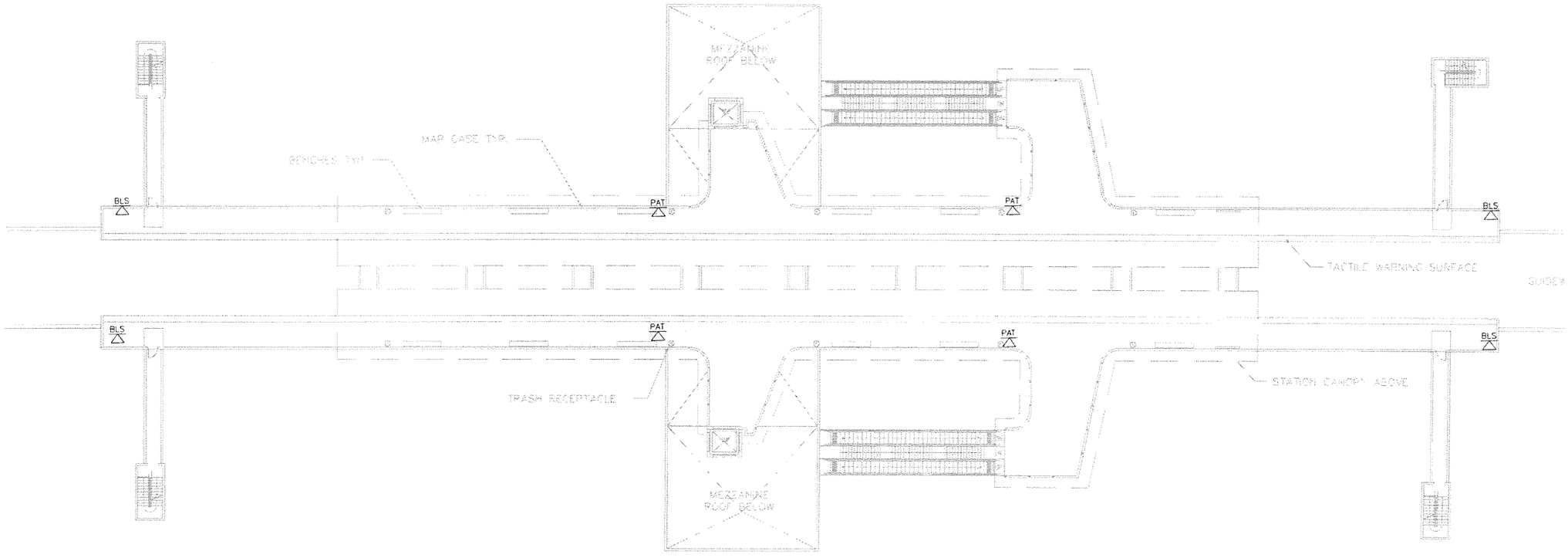

0 25 50 100

ML	4/06	1				60% PROGRESS SET
Designed by	Date	2				70% PROGRESS SET
GK	5/06					
Drawn by	Date					
ML	5/06					
Checked by	Date					
Approved by	Date	No	Date	By / Chk	App.	Revisions

NORTH CORRIDOR METRORAIL EXTENSION - PRELIMINARY ENGINEERING (100% SUBMITTAL)

MIAMI-DADE TRANSIT

PARSONS
7600 CORPORATE CENTER DRIVE, SUITE 500
MIAMI, FLORIDA 33126
PHONE: (786) 464-1000 FAX: (786) 845-7119
CERTIFICATE OF AUTHORIZATION NO. 1838

EARTHTECH
Transportation Services
architecture ? engineering ? construction
3750 NW 87th Avenue, Suite 300
Miami, Florida 33178-2430
CERTIFICATE OF AUTHORIZATION NO. 8115
REGISTRATION # AA26000697

Approved | Date | Approved | Date

PASSENGER STATIONS

NW 82ND ST. STATION PHONE AND BLS LOCATIONS PLATFORM LEVEL PLAN

Scale 1"=100' | Drawing SCM-138 | Sheet 327

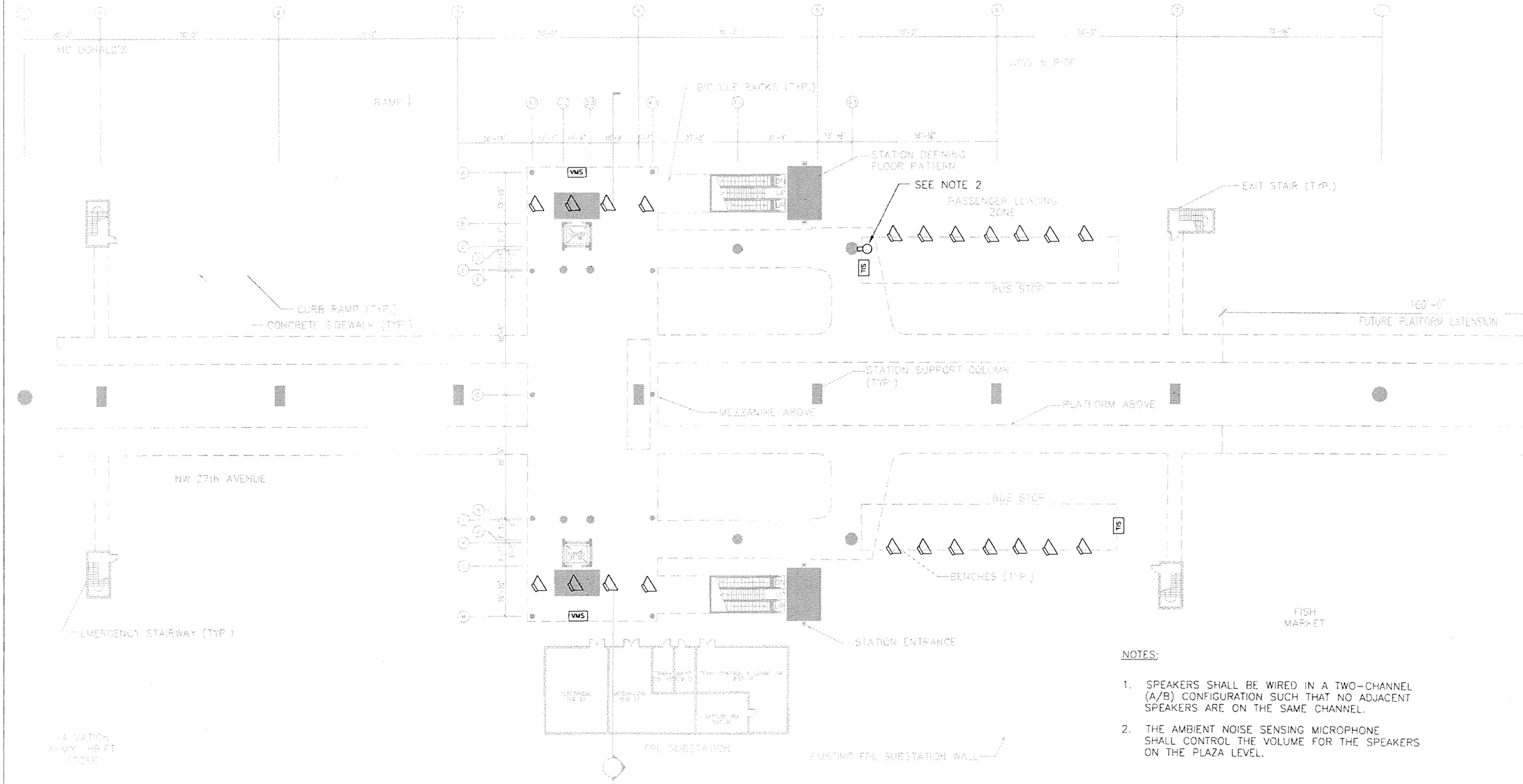

NOTES:

1. SPEAKERS SHALL BE WIRED IN A TWO-CHANNEL (A/B) CONFIGURATION SUCH THAT NO ADJACENT SPEAKERS ARE ON THE SAME CHANNEL.
2. THE AMBIENT NOISE SENSING MICROPHONE SHALL CONTROL THE VOLUME FOR THE SPEAKERS ON THE PLAZA LEVEL.

0 10 20 40

ML	4/06	1				60% PROGRESS SET
Designed by	Date	2				70% PROGRESS SET
GK	5/06					
Drawn by	Date					
ML	5/06					
Checked by	Date					
Approved by	Date	No.	Date	By / Chk	App.	Revisions

NORTH CORRIDOR METRORAIL EXTENSION - PRELIMINARY ENGINEERING (100% SUBMITTAL)

MIAMI-DADE TRANSIT

PARSONS
7600 CORPORATE CENTER DRIVE, SUITE 500
MIAMI, FLORIDA 33126
PHONE: (786) 464-1000 FAX: (786) 845-7119
CERTIFICATE OF AUTHORIZATION NO. 1638

EARTHTECH
Transportation Services
architecture ? engineering ? construction
3750 NW 87th Avenue, Suite 500
Miami, Florida 33178-2430
CERTIFICATE OF AUTHORIZATION NO. 8115
REGISTRATION # AA26000667

Approved | Date | Approved | Date

PASSENGER STATIONS

NW 82-ND ST. STATION SPEAKER AND SIGNAGE LOCATIONS PLAZA LEVEL PLAN

Scale 1"=40' | Drawing SCM-139 | Sheet 326

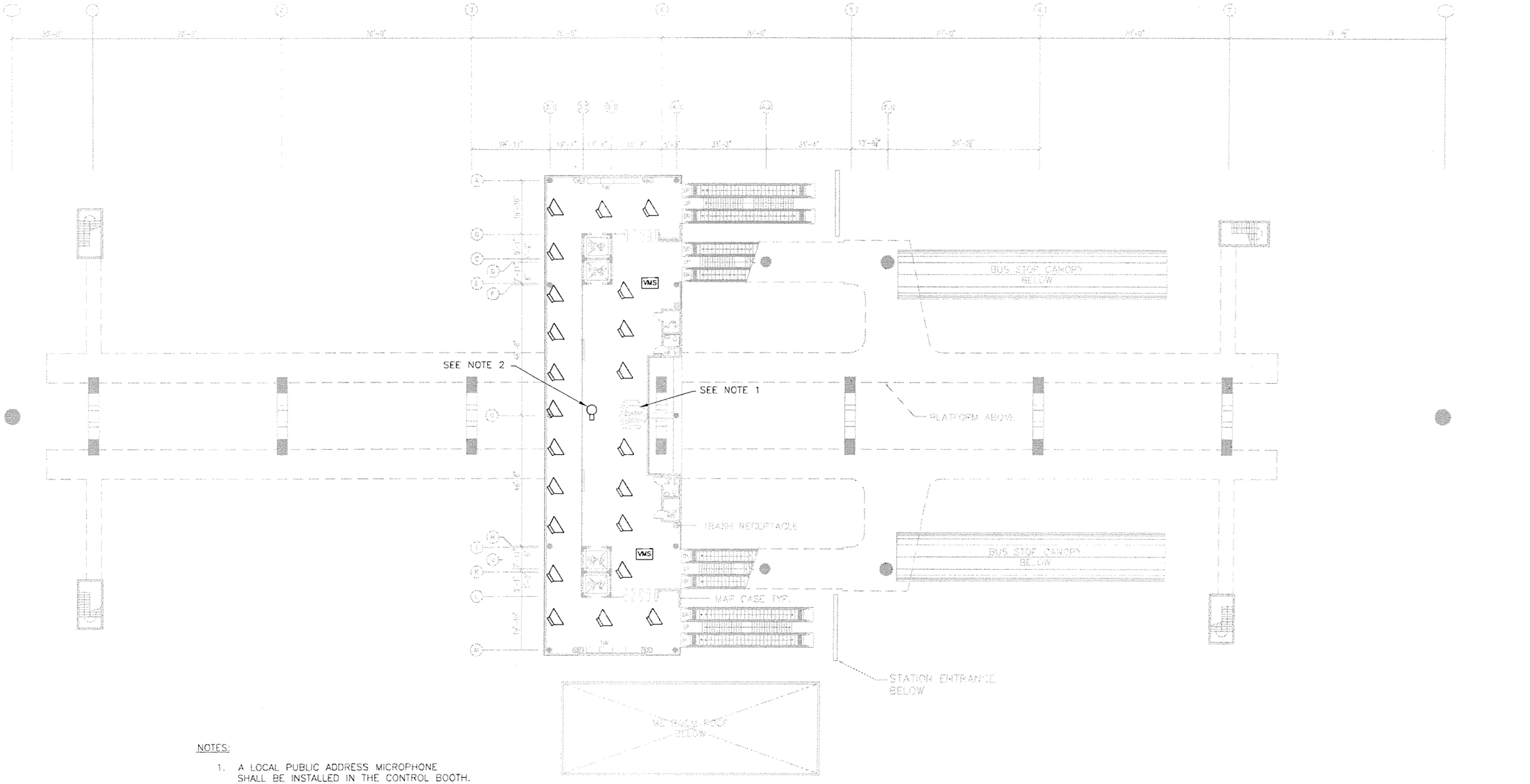

NOTES:

1. A LOCAL PUBLIC ADDRESS MICROPHONE SHALL BE INSTALLED IN THE CONTROL BOOTH.
2. THE AMBIENT NOISE SENSING MICROPHONE SHALL CONTROL THE VOLUME FOR THE SPEAKERS ON THE MEZZANINE LEVL.

0 10 20 40

ML	4/06	1				60% PROGRESS SET	
Designed by	Date	2				70% PROGRESS SET	
GK	5/06						
Drawn by	Date						
ML	5/06						
Checked by	Date						
Approved by	Date	No	Date	By / Chk	App	Revisions	

NORTH CORRIDOR METRORAIL EXTENSION - PRELIMINARY ENGINEERING (100% SUBMITTAL)

MIAMI-DADE TRANSIT

PARSONS
7600 CORPORATE CENTER DRIVE, SUITE 500
MIAMI, FLORIDA 33126
PHONE: (786) 464-1000 FAX: (786) 845-7119
CERTIFICATE OF AUTHORIZATION NO. 1638
Approved | Date

EARTHTECH
Transportation Services
architecture ? engineering ? construction
3750 NW 87th. Avenue, Suite 300
Miami, Florida 33178-2430
CERTIFICATE OF AUTHORIZATION NO. 8115
REGISTRATION # AA26000947
Approved | Date

PASSENGER STATIONS

NW 82-ND ST. STA. SPEAKER AND SIGNAGE LOCATIONS MEZZANINE LEVEL PLAN

Scale 1"=40' | Drawing SCM-140 | Sheet 329

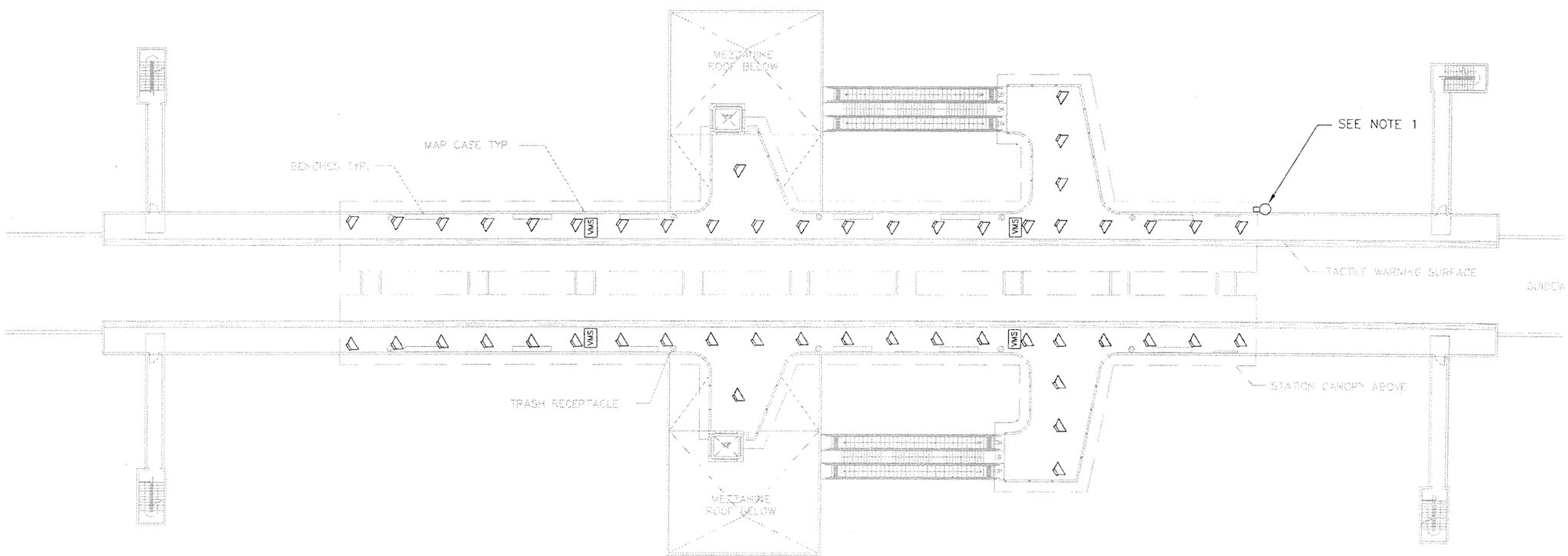

NOTES:

1. THE AMBIENT NOISE SENSING MICROPHONE SHALL CONTROL THE VOLUME FOR THE SPEAKERS ON THE PLATFORM LEVEL.

0 10 20 40

ML	4/06	1				60% PROGRESS SET	
Designed by	Date	2				70% PROGRESS SET	
GK	5/06						
Drawn by	Date						
ML	5/06						
Checked by	Date						
Approved by	Date	No.	Date	By / CHK	App.	Revisions	

NORTH CORRIDOR METRORAIL EXTENSION - PRELIMINARY ENGINEERING (100% SUBMITTAL)

MIAMI-DADE TRANSIT

PARSONS
7600 CORPORATE CENTER DRIVE, SUITE 500
MIAMI, FLORIDA 33126
PHONE: (786) 464-1000 FAX: (786) 845-7119
CERTIFICATE OF AUTHORIZATION NO. 1838

EARTHTECH
Transportation Services
architecture ? engineering ? construction
3752 NW 97th. Avenue, Suite 500
Miami, Florida 33178-2430
CERTIFICATE OF AUTHORIZATION NO. 8115
REGISTRATION # AA26000847

Approved | Date | Approved | Date

PASSENGER STATIONS

NW 82ND ST. STA. SPEAKER AND SIGNAGE LOCATIONS PLATFORM LEVEL PLAN

Scale 1"=40' | Drawing SCM-141 | Sheet 330

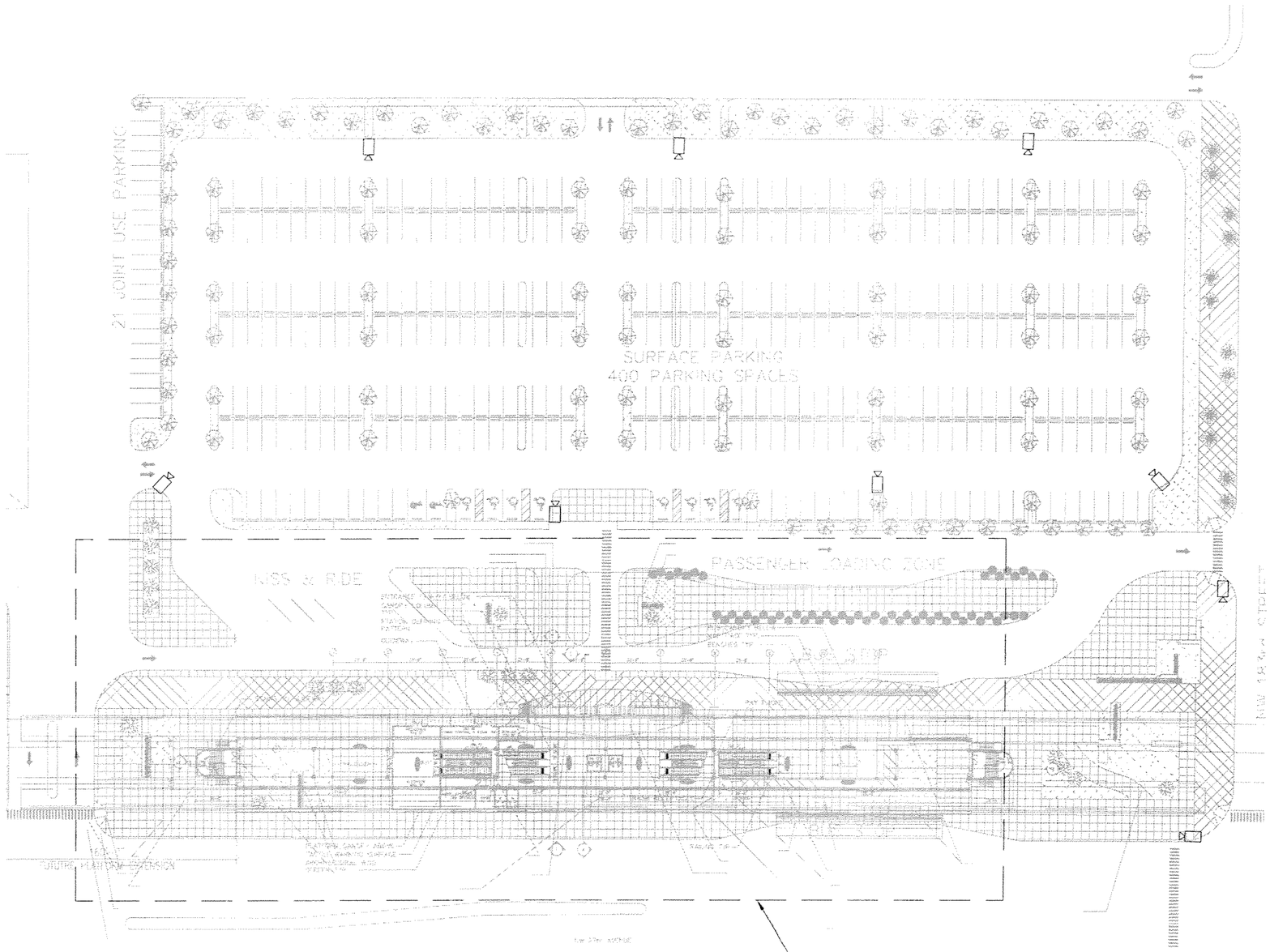

0 25 50 100

ML	4/06	1				60% PROGRESS SET	
Designed by	Date	2				70% PROGRESS SET	
GK	5/06						
Drawn by	Date						
ML	5/06						
Checked by	Date						
Approved by	Date	No.	Date	By	App	Revisions	

NORTH CORRIDOR METRORAIL EXTENSION - PRELIMINARY ENGINEERING (100% SUBMITTAL)

MIAMI-DADE TRANSIT

PARSONS
7600 CORPORATE CENTER DRIVE, SUITE 500
MIAMI, FLORIDA 33126
PHONE: (786) 464-1000 FAX: (786) 845-7119
CERTIFICATE OF AUTHORIZATION NO. 1838

Approved | Date

EARTHTECH
Transportation Services
architecture ? engineering ? construction
3750 NW 87th Avenue, Suite 300
Miami, Florida 33178-2430
CERTIFICATE OF AUTHORIZATION NO. #115
REGISTRATION # AA26000607

Approved | Date

PASSENGER STATIONS

NW 183RD ST. STATION CCTV, F&I DEVICE LOCATIONS SITE PLAN

Scale 1" = 100' | Drawing SCM-151 | Sheet 331

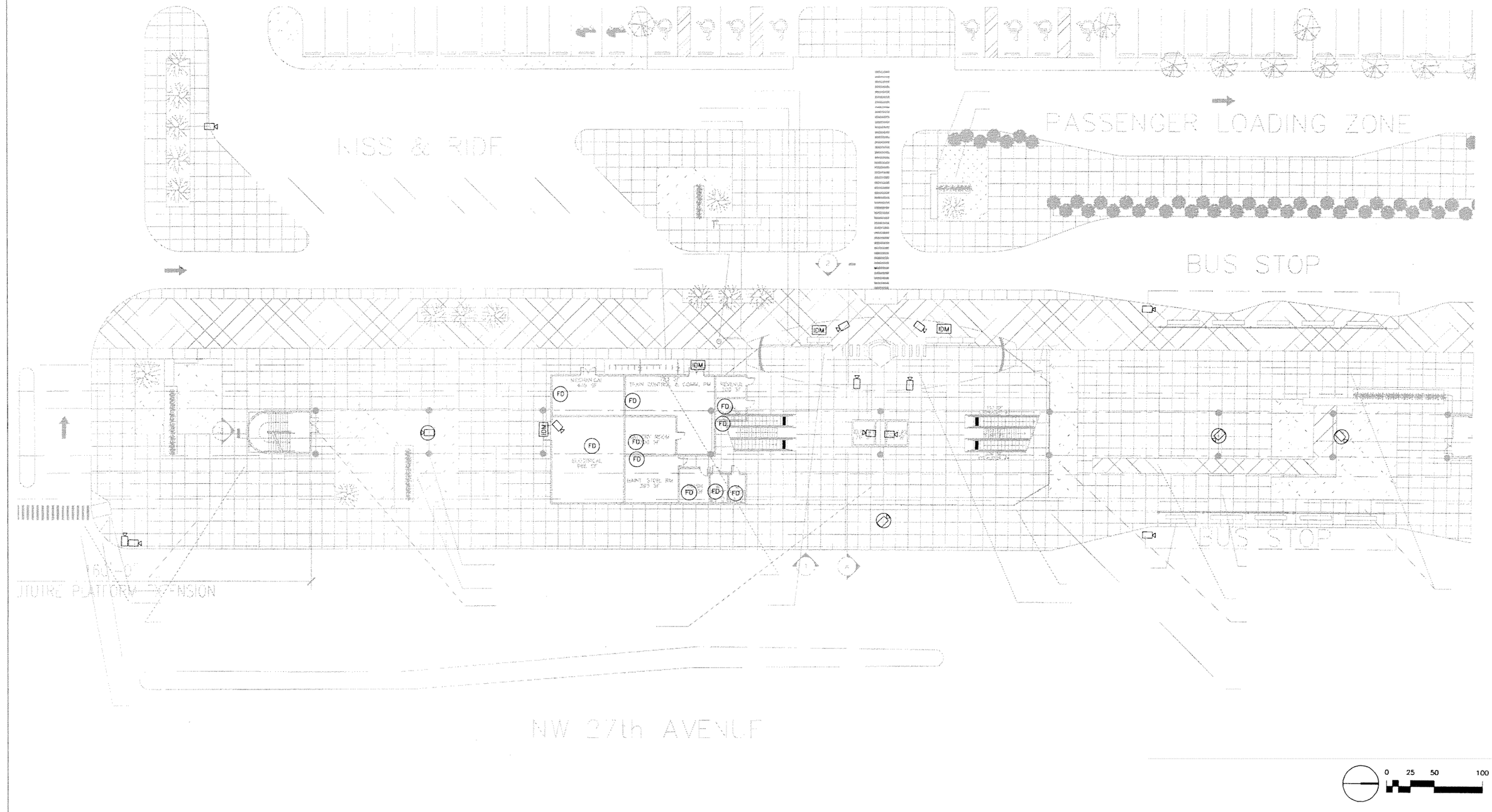

0 25 50 100

ML 4/06 Designed by Date	1				60% PROGRESS SET	NORTH CORRIDOR METRORAIL EXTENSION - PRELIMINARY ENGINEERING (100% SUBMITTAL)	PASSENGER STATIONS
GK 5/06 Drawn by Date	2				70% PROGRESS SET		
ML 5/06 Checked by Date						MIAMI-DADE TRANSIT	NW 183RD ST. STATION CCTV, F&I DEVICE LOCATIONS PLAZA LEVEL PLAN
Approved by Date	No	Date	By	App.	Revisions	PARSONS 7600 CORPORATE CENTER DRIVE, SUITE 500 MIAMI, FLORIDA 33126 PHONE: (786) 464-1000 FAX: (786) 845-7119 CERTIFICATE OF AUTHORIZATION NO. 1638 Approved Date	EARTHTECH Transportation Services architecture ? engineering ? construction 3756 NW 87th Avenue, Suite 300 Miami, Florida 33178-2430 CERTIFICATE OF AUTHORIZATION NO. 8115 REGISTRATION # AA26000967 Approved Date	Scale 1" = 100' Drawing SCM-152 Sheet 332

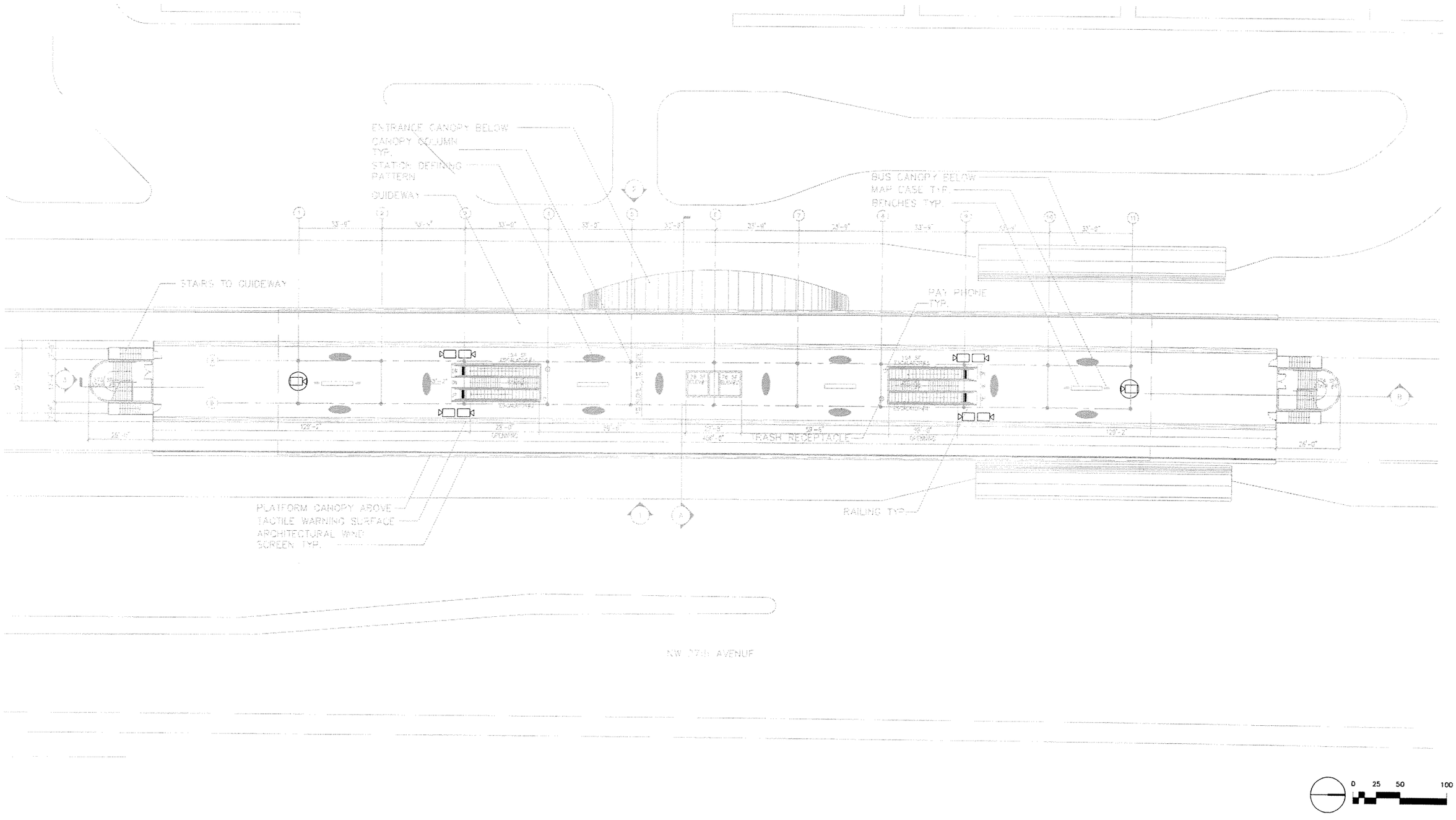

ML 4/06 Designed by Date	1					60% PROGRESS SET
GK 5/06 Drawn by Date	2					70% PROGRESS SET
ML 5/06 Checked by Date						
Approved by Date	No	Date	By / Chk	App.		Revisions

NORTH CORRIDOR METRORAIL EXTENSION - PRELIMINARY ENGINEERING (100% SUBMITTAL)

MIAMI-DADE TRANSIT

PARSONS
7600 CORPORATE CENTER DRIVE, SUITE 500
MIAMI, FLORIDA 33126
PHONE: (786) 464-1000 FAX: (786) 845-7119
CERTIFICATE OF AUTHORIZATION NO. 1838

Approved | Date

EARTHTECH
Transportation Services
architecture ? engineering ? construction
3750 NW 87th Avenue, Suite 300
Miami, Florida 33178-2436
CERTIFICATE OF AUTHORIZATION NO. 8115
REGISTRATION # AA26000697

Approved | Date

PASSENGER STATIONS

NW 183RD ST. STATION CCTV DEVICE LOCATIONS PLATFORM PLAN

Scale 1"=100' | Drawing SCM-153 | Sheet 333

ML 4/06 Designed by Date	1				60% PROGRESS SET
GK 5/06 Drawn by Date	2				70% PROGRESS SET
ML 5/06 Checked by Date					
Approved by Date	No.	Date	By / Chk	App.	Revisions

NORTH CORRIDOR METRORAIL EXTENSION - PRELIMINARY ENGINEERING (100% SUBMITTAL)

MIAMI-DADE

MIAMI-DADE TRANSIT

PARSONS
7600 CORPORATE CENTER DRIVE, SUITE 500
MIAMI, FLORIDA 33126
PHONE: (786) 464-1000 FAX: (786) 845-7119
CERTIFICATE OF AUTHORIZATION NO. 1638

Approved Date

EARTHTECH
Transportation Services
architecture ? engineering ? construction
3750 NW 87th Avenue, Suite 300
Miami, Florida 33178-2430
CERTIFICATE OF AUTHORIZATION NO. 8115
REGISTRATION # AA26000687

Approved Date

PASSENGER STATIONS

NW 183RD ST. STATION
PHONE AND BLS LOCATIONS
PLAZA LEVEL PLAN

Scale 1" = 100' | Drawing SCM-155 | Sheet 334

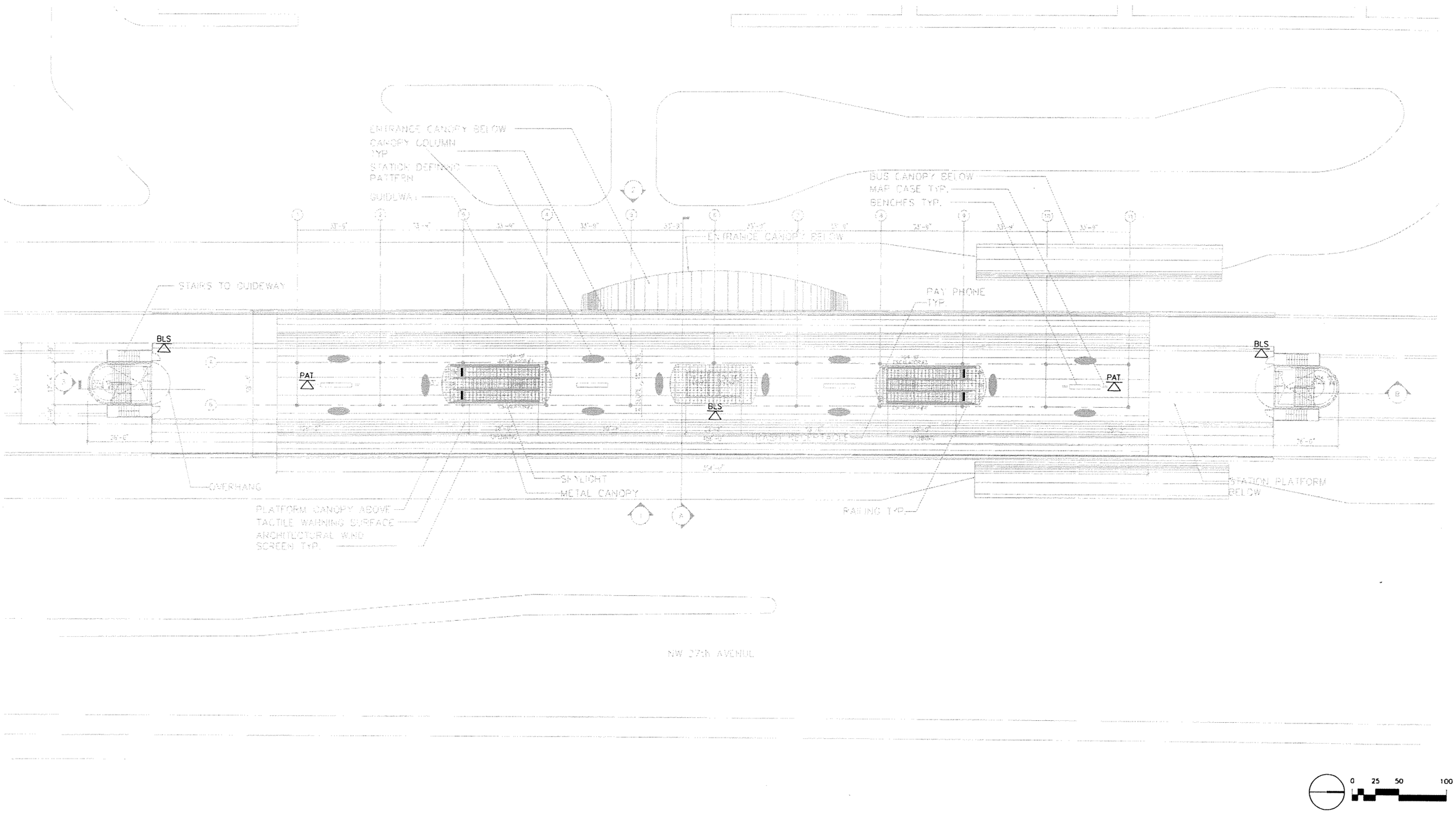

ML 4/06 Designed by Date	1					60% PROGRESS SET
GK 5/06 Drawn by Date	2					70% PROGRESS SET
ML 5/06 Checked by Date						
Approved by Date	No.	Date	By / Chk	App.	Revisions	

NORTH CORRIDOR METRORAIL EXTENSION - PRELIMINARY ENGINEERING (100% SUBMITTAL)

MIAMI-DADE TRANSIT

PARSONS
7600 CORPORATE CENTER DRIVE, SUITE 500
MIAMI, FLORIDA 33126
PHONE: (786) 464-1000 FAX: (786) 845-7119
CERTIFICATE OF AUTHORIZATION NO. 1838

Approved / Date

EARTHTECH
Transportation Services
architecture ? engineering ? construction
3750 NW 87th Avenue, Suite 300
Miami, Florida 33178-2430
CERTIFICATE OF AUTHORIZATION NO. 8115
REGISTRATION # AA26000687

Approved / Date

PASSENGER STATIONS

NW 183RD ST. STATION PHONE & BLS LOCATIONS PLAZA LEVEL PLAN

Scale 1"=100' | Drawing SCM-156 | Sheet 335

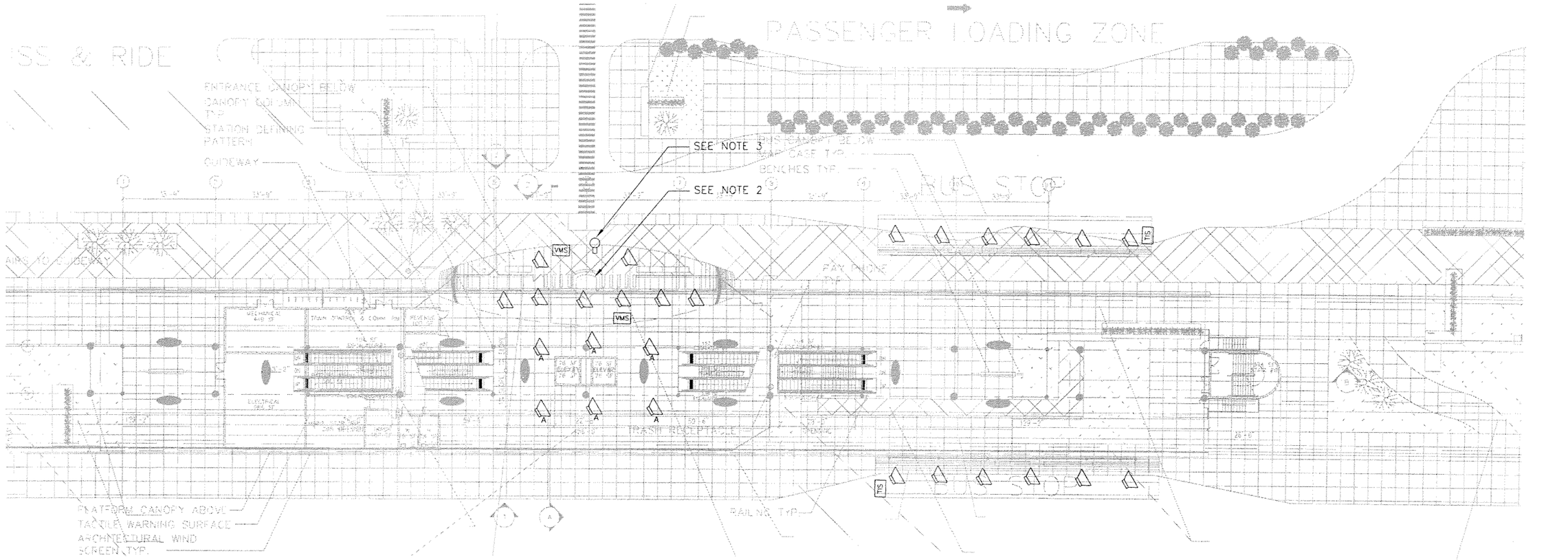

NOTES:

1. SPEAKERS SHALL BE WIRED IN A TWO-CHANNEL (A/B) CONFIGURATION SUCH THAT NO ADJACENT SPEAKERS ARE ON THE SAME CHANNEL.
2. A LOCAL PUBLIC ADDRESS MICROPHONE SHALL BE INSTALLED IN THE CONTROL BOOTH.
3. THE AMBIENT NOISE SENSING MICROPHONE SHALL CONTROL THE VOLUME FOR THE SPEAKERS ON THE PLAZA LEVEL.

LEGEND:

SPEAKER AND FIRE STROBE/SPEAKER

A HIGH POWERED SPEAKER AND FIRE STROBE/SPEAKER

SEE DWG. SCM-103 FOR OTHER SYMBOLS.

0 25 50 100

ML 4/06 Designed by Date	1					60% PROGRESS SET
GK 5/06 Drawn by Date	2					70% PROGRESS SET
ML 5/06 Checked by Date						
Approved by Date	No.	Date	By / Chk	App.		Revisions

NORTH CORRIDOR METRORAIL EXTENSION - PRELIMINARY ENGINEERING (100% SUBMITTAL)

MIAMI-DADE TRANSIT

PARSONS
7600 CORPORATE CENTER DRIVE, SUITE 500
MIAMI, FLORIDA 33126
PHONE: (786) 464-1000 FAX: (786) 845-7119
CERTIFICATE OF AUTHORIZATION NO. 1838
Approved Date

EARTHTECH
Transportation Services
architecture ? engineering ? construction
2750 NW 87th. Avenue, Suite 200
Miami, Florida 33178-2430
CERTIFICATE OF AUTHORIZATION NO. 8115
REGISTRATION # AA2700007
Approved Date

PASSENGER STATIONS

NW 183RD ST. STATION SPEAKER AND SIGNAGE LOCATIONS PLAZA LEVEL PLAN

Scale 1" = 100' Drawing SCM-157 Sheet 336

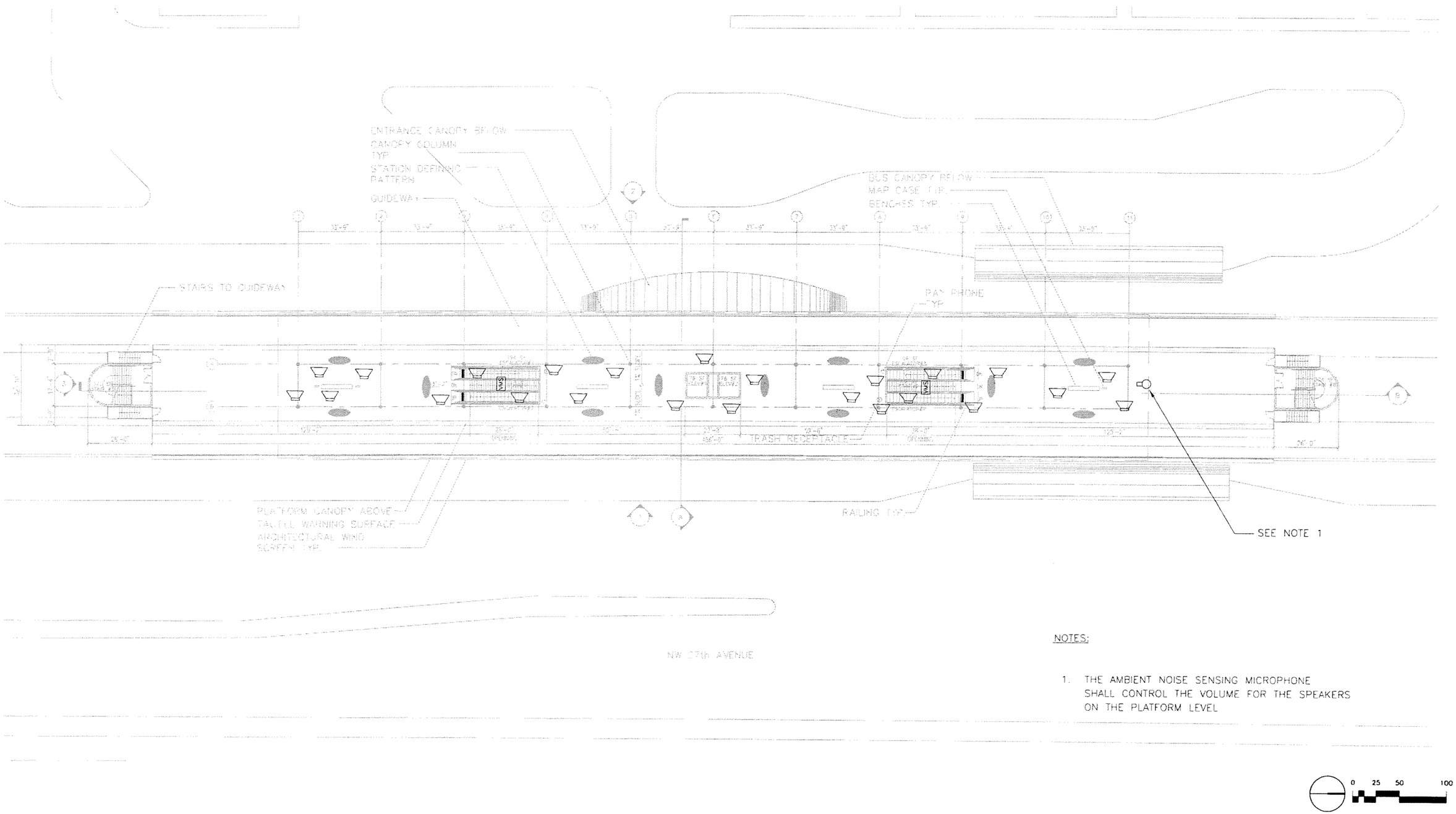

NOTES:

1. THE AMBIENT NOISE SENSING MICROPHONE SHALL CONTROL THE VOLUME FOR THE SPEAKERS ON THE PLATFORM LEVEL

ML	4/06	1				60% PROGRESS SET
Designed by	Date	2				70% PROGRESS SET
GK	5/06					
Drawn by	Date					
ML	5/06					
Checked by	Date					
Approved by	Date	No.	Date	By / Chk	App.	Revisions

NORTH CORRIDOR METRORAIL EXTENSION - PRELIMINARY ENGINEERING (100% SUBMITTAL)

MIAMI-DADE

MIAMI-DADE TRANSIT

PARSONS
7600 CORPORATE CENTER DRIVE, SUITE 500
MIAMI, FLORIDA 33126
PHONE: (786) 464-1000 FAX: (786) 845-7119
CERTIFICATE OF AUTHORIZATION NO. 1838

Approved | Date

EARTHTECH
Transportation Services
architecture ? engineering ? construction
3750 NW 87th Avenue, Suite 500
Miami, Florida 33178-2430
CERTIFICATE OF AUTHORIZATION NO. 8115
REGISTRATION # AA26000687

Approved | Date

PASSENGER STATIONS

NW 183RD ST. STATION SPEAKER AND SIGNAL LOCATIONS PLATFORM PLAN

Scale 1"=100' | Drawing SCM-158 | Sheet 337

ABBREVIATIONS

AC	ALTERNATING CURRENT
AM	AMMETER
AMP, A	AMPERE
ANN	ANNUNCIATOR
AUX	AUXILIARY
BAT	BATTERY
BC	BATTERY CHARGER
BKR	BREAKER
CAB	CABINET
CB	CIRCUIT BREAKER
CC	CENTRAL CONTROL
CKT	CIRCUIT
C/L	CENTER LINE
CONC	CONCRETE
COND	CONDUIT
CS	CONTROL SWITCH
DC	DIRECT CURRENT
DIST PNL	DISTRIBUTION PANEL
EB	EASTBOUND
ETS	EMERGENCY TRIP STATION
FDR	FEEDER
FP&L CO.	FLORIDA POWER & LIGHT COMPANY
FT	FEET
FUT	FUTURE
GND	GROUND
GRS	GALVANIZED RIGID STEEL
HH	HANDHOLE
HR	HAND RESET
HV	HIGH VOLTAGE
HZ	HERTZ
IC	INTERRUPTING CAPACITY
IFTC	INTERFACE TERMINAL CABINET
KCMIL	THOUSAND CIRCULAR MILS
KV	KILOVOLT
KVA	KILOVOLT AMPERES
KW	KILOWATT
LA	LIGHTNING ARRESTOR
LC	LOCAL CONTROL
LMR	LOAD MEASURING RESISTOR
LV	LOW VOLTAGE
MAX	MAXIMUM
MH	MANHOLE
MIN	MINIMUM
MVA	MEGAVOLTAMPERES
NB	NORTHBOUND
NC	NORMALLY CLOSED
NEG	NEGATIVE
NIC	NOT IN CONTRACT
NO	NUMBER
NTS	NOT TO SCALE
OC	ON CENTER
P	POWER
PB	PULL BOX
PH	PHASE
POS	POSITIVE
PVC	POLY VINYL CHLORIDE
R	RECTIFIER
REINF	REINFOREMENT
RES	RESISTANCE
RR	RUNNING RAIL
RT	RECTIFIER TRANSFORMER
RTN	RETURN
SA	SURGE ARRESTOR
SB	SOUTHBOUND
SHT	SHEET
STA	STATIONING
SW	SWITCH
SWGR	SWITCHGEAR
T	TRIP
TC & C	TRAIN CONTROL AND COMMUNICATION
TP	TRACTION POWER
TPS,TPSS	TRACTION POWER SUBSTATION
TRK	TRACK
TYP	TYPICAL
V	VOLT
VA	VOLT-AMPERES
VM	VOLT METER
W	WATT
WB	WESTBOUND
WHD	WATT HOUR DEMAND METER
XFMR	TRANSFORMER

DDP	5/06						
Designed by	Date						
GK	5/06						
Drawn by	Date						
JCG	5/06						
Checked by	Date						
Approved by	Date	No.	Date	By / Chk	App.	Revisions	

NORTH CORRIDOR METRORAIL EXTENSION - PRELIMINARY ENGINEERING (100% SUBMITTAL)

MIAMI-DADE TRANSIT

PARSONS
7600 CORPORATE CENTER DRIVE, SUITE 500
MIAMI, FLORIDA 33126
PHONE: (786) 464-1000 FAX: (786) 845-7119
CERTIFICATE OF AUTHORIZATION NO. 1838

Approved	Date MAY, 2006	Approved	Date

TRACTION POWER

LEGENDS, SYMBOLS AND ABBREVIATIONS (1 OF 2)

Scale NTS	Drawing TPW-103	Sheet 330	

DIAGRAM SYMBOLS

SYMBOL	DENOTES
26/DT1	RECTIFIER DIODE TEMPERATURE DEVICE (STAGE 1)
26/DT2	RECTIFIER DIODE TEMPERATURE DEVICE (STAGE 2)
27/59	UNDERVOLTAGE/OVERVOLTAGE RELAY
27/59X	UNDERVOLTAGE/OVERVOLTAGE AUXILIARY RELAY
32	INSTANTANEOUS REVERSE CURRENT TRIP DEVICE
33	RECTIFIER DOOR INTERLOCK
43	MANUAL TRANSFER OR SELECTOR DEVICE (3 POSITION: AUTO, MANUAL, TEST)
46	PHASE BALANCE CURRENT RELAY
46X	PHASE BALANCE CURRENT AUXILIARY RELAY
49/WT1	TRANSFORMER WINDING TEMPERATURE DEVICE (STAGE 1)
49/WT2	TRANSFORMER WINDING TEMPERATURE DEVICE (STAGE 2)
50/51	AC INSTANTANEOUS, TIME OVERCURRENT PHASE RELAY
50N/51N	AC INSTANTANEOUS, TIME OVERCURRENT GROUND RELAY
51	AC TIME OVERCURRENT PHASE RELAY
52	AC CIRCUIT BREAKER
64/64G	RECTIFIER ENCLOSURE FAULT DETECTION AND ENCLOSURE GROUND DETECTION
86, 186	LOCKOUT RELAY
98	RECTIFIER DIODE FAILURE DEVICE
99-1	AC BUS SURGE PROTECTION
99-2	AC BUS SURGE PROTECTION
127	DC FEEDER UNDERVOLTAGE RELAY
127X	DC FEEDER UNDERVOLTAGE AUXILIARY RELAY

SYMBOL	DENOTES
129	CONTACTOR
150	DC FEEDER FAULT DETECTION RATE OF RISE RELAY
164/164G	DC SWITCHGEAR ENCLOSURE FAULT DETECTION AND ENCLOSURE GROUND DETECTION
172	DC CIRCUIT BREAKER
176	INSTANTANEOUS, SERIES DIRECT ACTING, BI-DIRECTIONAL CURRENT TRIP DEVICE
182	AUTOMATIC RECLOSING RELAY
183	LOAD MEASURING DEVICE
185	TRANSFER TRIP RELAY
189	NEGATIVE DISCONNECT SWITCH
AT	CURRENT TRANSDUCER
A	AMMETER
	CABLE TERMINATION
	FUSE
	DRAWOUT FUSE
	D.C. SHUNT
	DIODE OR RECTIFIER
	EQUIPMENT ENCLOSURE GROUND
	DRAWOUT DC CIRCUIT BREAKER WITH SERIES TRIP DEVICE
	TRANSFORMER
3	CURRENT TRANSFORMER, DELTA CONNECTED NUMBER INDICATES QUANTITY
	CURRENT TRANSFORMER, WYE CONNECTED
2	POTENTIAL TRANSFORMER, NUMBER INDICATES QUANTITY

SYMBOL	DENOTES
	3 PHASE, WYE, TRANSFORMER CONNECTION
	3 PHASE, DELTA TRANSFORMER CONNECTION
	RECTIFIER TRANSFORMER
	DRAWOUT AC CIRCUIT BREAKER
	LIGHTNING ARRESTER WITH GROUND CONNECTION
K	KIRK KEY INTERLOCK
NC	DISCONNECT SWITCH NORMALLY CLOSED
NO	DISCONNECT SWITCH NORMALLY OPEN
AL	ALARM
	EARTH GROUND
	LOAD MEASURING RESISTOR
	BATTERY
	INTERPHASE TRANSFORMER
RES	RESISTOR
	REMOVABLE LINK
	NORMALLY OPEN CONTACT
	NORMALLY CLOSED CONTACT
	TIMED DELAY CONTACT
	PUSHBUTTON SWITCH, NORMALLY OPENED
	PUSHBUTTON SWITCH, NORMALLY CLOSED
ST	SHUNT TRANSDUCER

SYMBOL	DENOTES
SI	SUPERVISORY INTERPOSING RELAY
A	PILOT OR INDICATING LIGHT, LETTER INDICATES COLOR AS FOLLOWS: A=AMBER, B=BLUE, G=GREEN, R=RED, W=WHITE
AS	AMMETER SWITCH
VS	VOLTMETER SWITCH
VT	VOLTAGE TRANSDUCER
400/300	MOLDED CASE CIRCUIT BREAKER, FRAME SIZE INDICATED ABOVE LINE AND TRIP VALUE BELOW
M	MOTORIZED DISCONNECT SWITCH
V	VOLTMETER
	METAL ENCLOSED BUS DUCT
———	POWER CIRCUIT
- - -	CONTROL CIRCUIT
—·—·—	FUTURE

DDP	5/06								
Designed by	Date								
GK	5/06								
Drawn by	Date								
JCG	5/06								
Checked by	Date								
Approved by	Date	No.	Date	By / Chk	App.	Revisions			

NORTH CORRIDOR METRORAIL EXTENSION - PRELIMINARY ENGINEERING (100% SUBMITTAL)

MIAMI-DADE TRANSIT

PARSONS
7600 CORPORATE CENTER DRIVE, SUITE 500
MIAMI, FLORIDA 33126
PHONE: (786) 464-1000 FAX: (786) 845-7119
CERTIFICATE OF AUTHORIZATION NO. 1838

Approved | Date: MAY, 2006 | Approved | Date

TRACTION POWER

LEGENDS, SYMBOLS AND ABBREVIATIONS (2 OF 2)

Scale: NTS | Drawing: TPW-104 | Sheet: 339

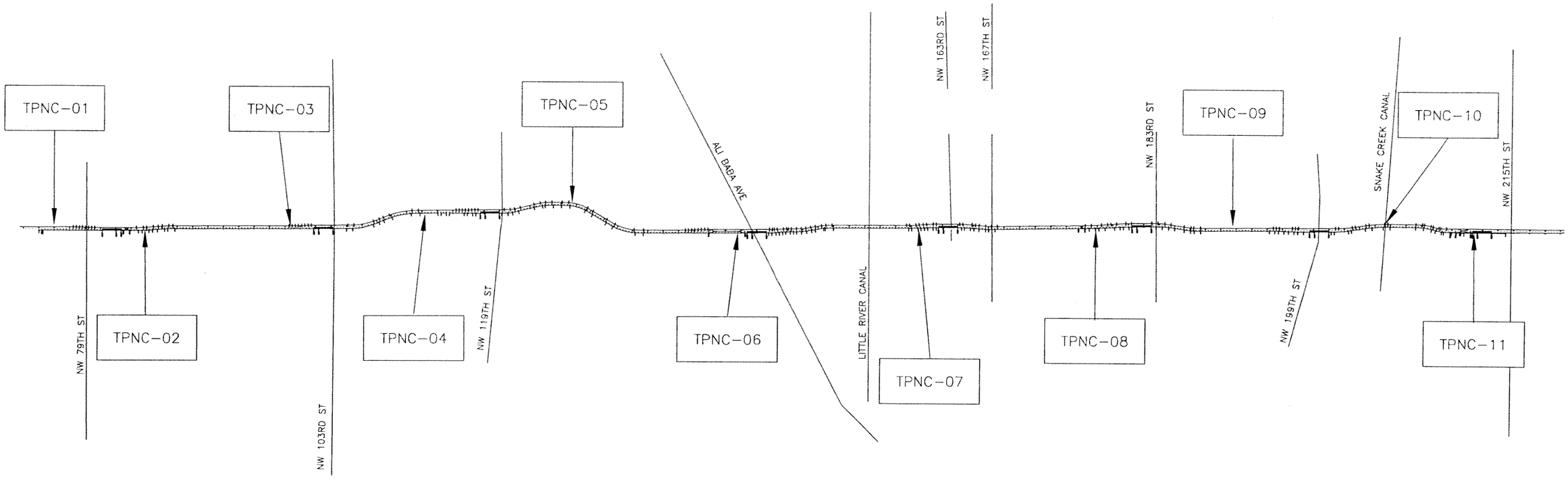

FACILITY	LOCATION
TPNC-01	108+80
TPNC-02	134+47
TPNC-03	181+80
TPNC-04	226+00
TPNC-05	273+50
TPNC-06	329+00

FACILITY	LOCATION
TPNC-07	387+50
TPNC-08	444+50
TPNC-09	489+00
TPNC-10	538+25
TPNC-11	565+90

NOTE: TPNC-01 IS A GAP-TIE STATION.
ALL OTHERS ARE TRACTION POWER SUBSTATIONS.

DDP Designed by	5/06 Date					
GK Drawn by	5/06 Date					
JCG Checked by	5/06 Date					
Approved by	Date	No.	Date	By / Chk	App.	Revisions

NORTH CORRIDOR METRORAIL EXTENSION - PRELIMINARY ENGINEERING (100% SUBMITTAL)

MIAMI-DADE TRANSIT

PARSONS
7600 CORPORATE CENTER DRIVE, SUITE 500
MIAMI, FLORIDA 33126
PHONE: (786) 464-1000 FAX: (786) 845-7119
CERTIFICATE OF AUTHORIZATION NO. 1838

Approved | Date MAY, 2006 | Approved | Date

TRACTION POWER

SUBSTATION LOCATION MAP

Scale NTS | Drawing TPW-105 | Sheet 340

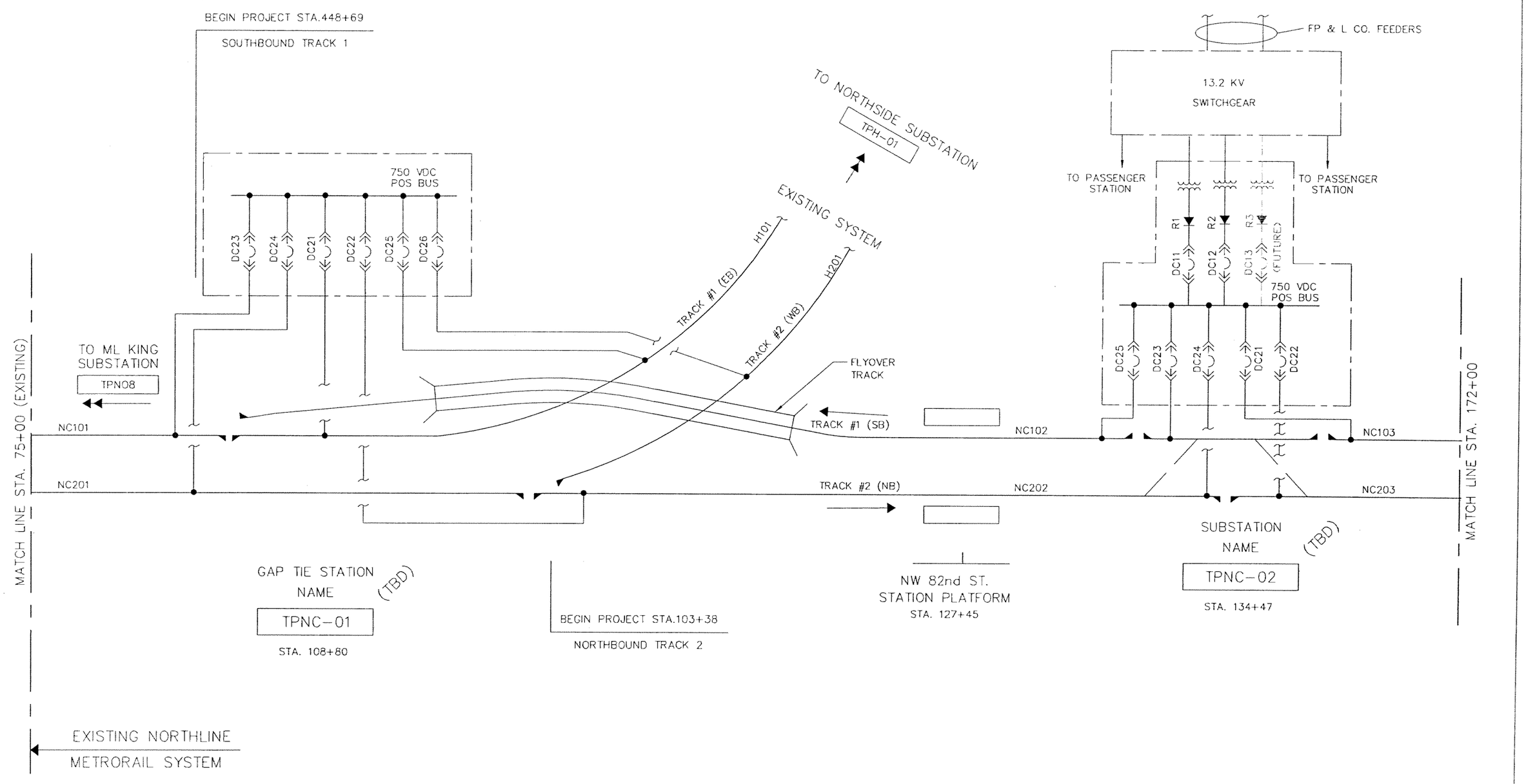

DDP Designed by	5/06 Date					
GK Drawn by	5/06 Date					
JCG Checked by	5/06 Date					
Approved by	Date	No.	Date	By / Chk	App.	Revisions

NORTH CORRIDOR METRORAIL EXTENSION - PRELIMINARY ENGINEERING (100% SUBMITTAL)

MIAMI-DADE TRANSIT

PARSONS
7600 CORPORATE CENTER DRIVE, SUITE 500
MIAMI, FLORIDA 33126
PHONE: (786) 464-1000 FAX: (786) 845-7119
CERTIFICATE OF AUTHORIZATION NO. 1838

Approved — Date MAY, 2006 | Approved — Date

TRACTION POWER

ELECTRICAL SECTIONING DIAGRAM STA. 75+00 TO STA. 172+00

Scale NTS | Drawing TPW -106 | Sheet 32

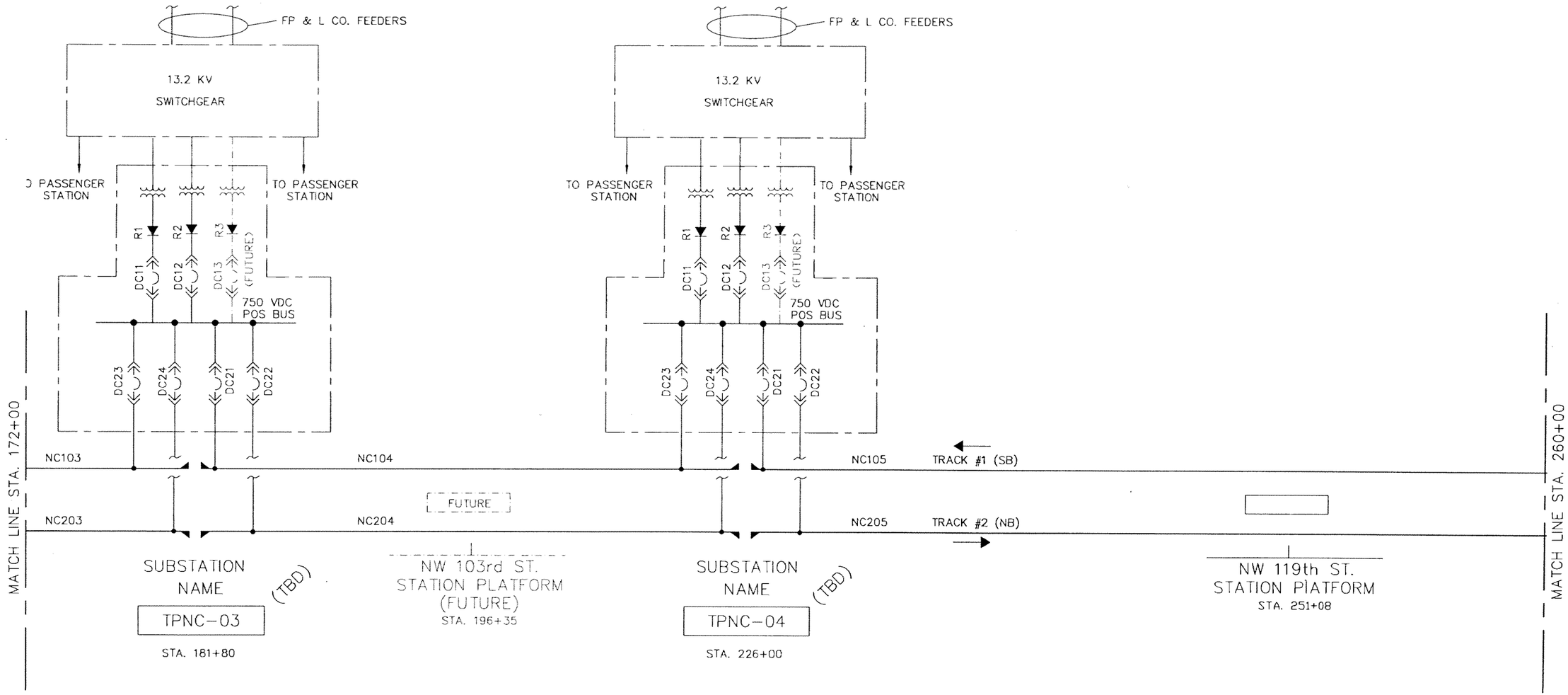

DDP Designed by	5/06 Date						
GK Drawn by	5/06 Date						
JCG Checked by	5/06 Date						
Approved by	Date	No.	Date	By / Chk.	App.	Revisions	

NORTH CORRIDOR METRORAIL EXTENSION - PRELIMINARY ENGINEERING (100% SUBMITTAL)

MIAMI-DADE TRANSIT

PARSONS
7600 CORPORATE CENTER DRIVE, SUITE 500
MIAMI, FLORIDA 33126
PHONE: (786) 464-1000 FAX: (786) 845-7119
CERTIFICATE OF AUTHORIZATION NO. 1838

Approved | Date MAY, 2006 | Approved | Date

TRACTION POWER

ELECTRICAL SECTIONING DIAGRAM STA. 172+00 TO STA. 260+00

Scale NTS | Drawing TPW -107 | Sheet 342

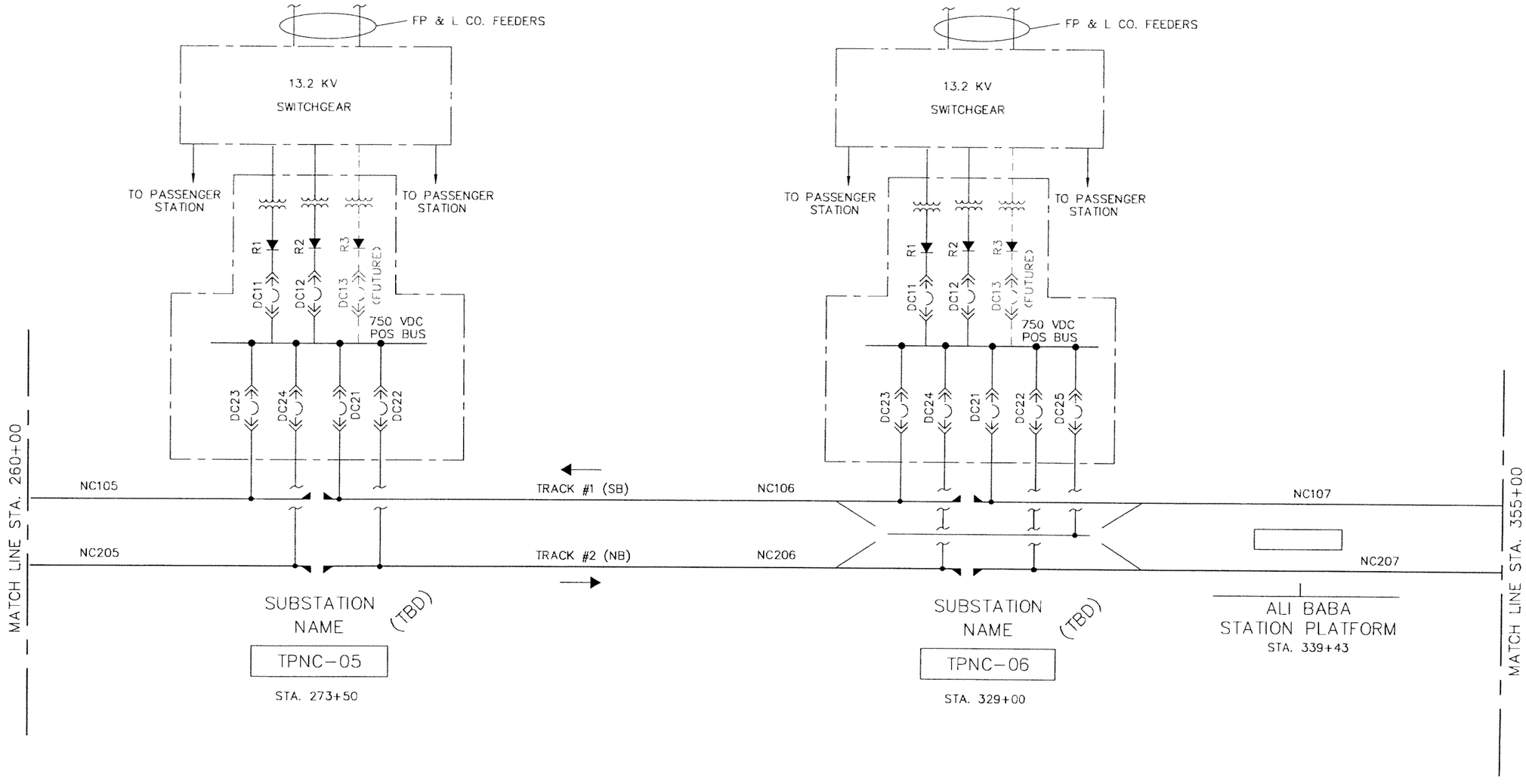

DDP Designed by	5/06 Date					
GK Drawn by	5/06 Date					
JCG Checked by	5/06 Date					
Approved by	Date	No.	Date	By / Chk	App.	Revisions

NORTH CORRIDOR METRORAIL EXTENSION - PRELIMINARY ENGINEERING (100% SUBMITTAL)

MIAMI-DADE TRANSIT

PARSONS
7600 CORPORATE CENTER DRIVE, SUITE 500
MIAMI, FLORIDA 33126
PHONE: (786) 464-1000 FAX: (786) 845-7119
CERTIFICATE OF AUTHORIZATION NO. 1638

Approved | Date: MAY, 2006 | Approved | Date

TRACTION POWER

ELECTRICAL SECTIONING DIAGRAM STA. 260+00 TO STA. 355+00

Scale: NTS | Drawing: TPW-108 | Sheet: 343

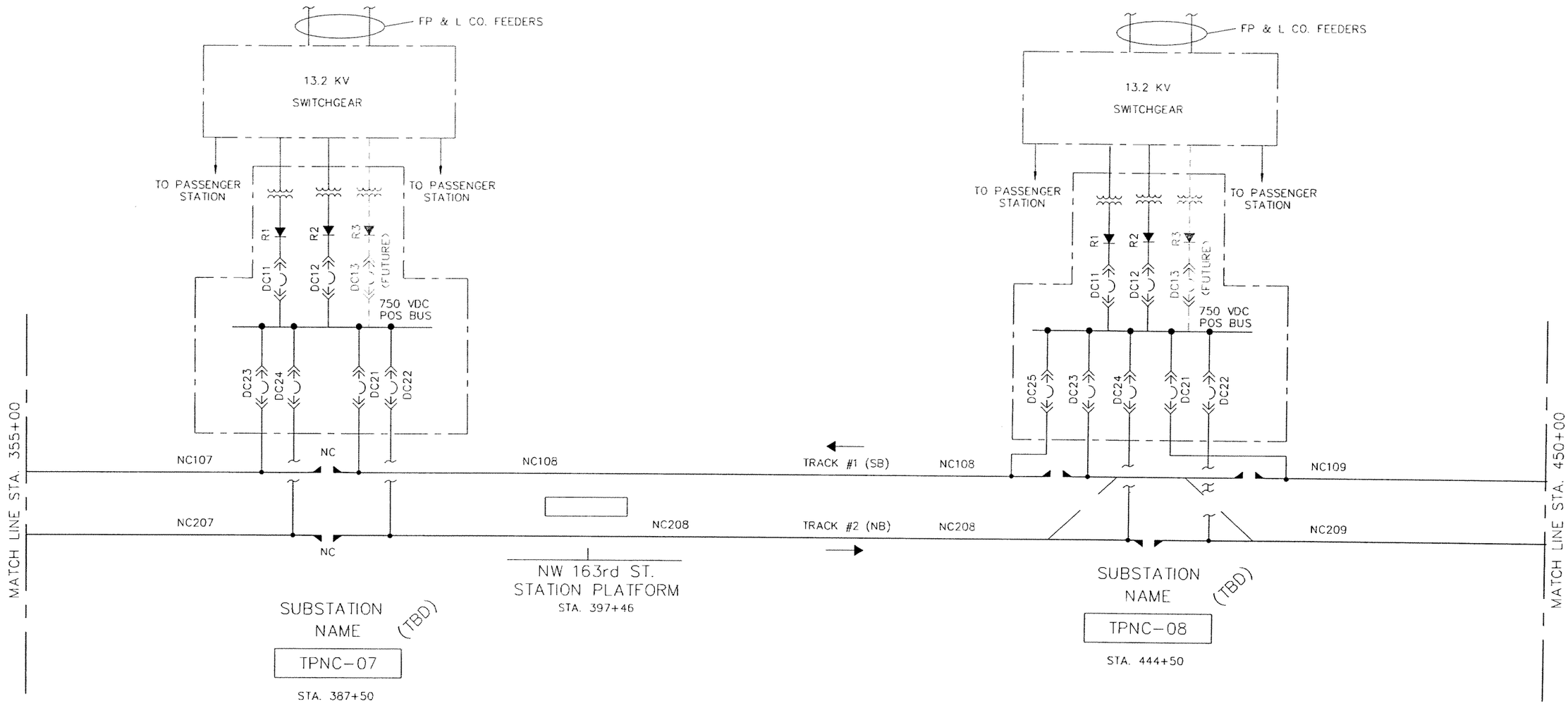

DDP Designed by	5/06 Date					
GK Drawn by	5/06 Date					
JCG Checked by	5/06 Date					
Approved by	Date	No.	Date	By / CHK	App.	Revisions

NORTH CORRIDOR METRORAIL EXTENSION - PRELIMINARY ENGINEERING (100% SUBMITTAL)

MIAMI-DADE TRANSIT

PARSONS
7600 CORPORATE CENTER DRIVE, SUITE 500
MIAMI, FLORIDA 33126
PHONE: (786) 464-1000 FAX: (786) 845-7119
CERTIFICATE OF AUTHORIZATION NO. 1838

Approved MAY, 2006 Date

Approved Date

TRACTION POWER

ELECTRICAL SECTIONING DIAGRAM STA. 355+00 TO STA. 450+00

Scale NTS Drawing TPW -109 Sheet 34

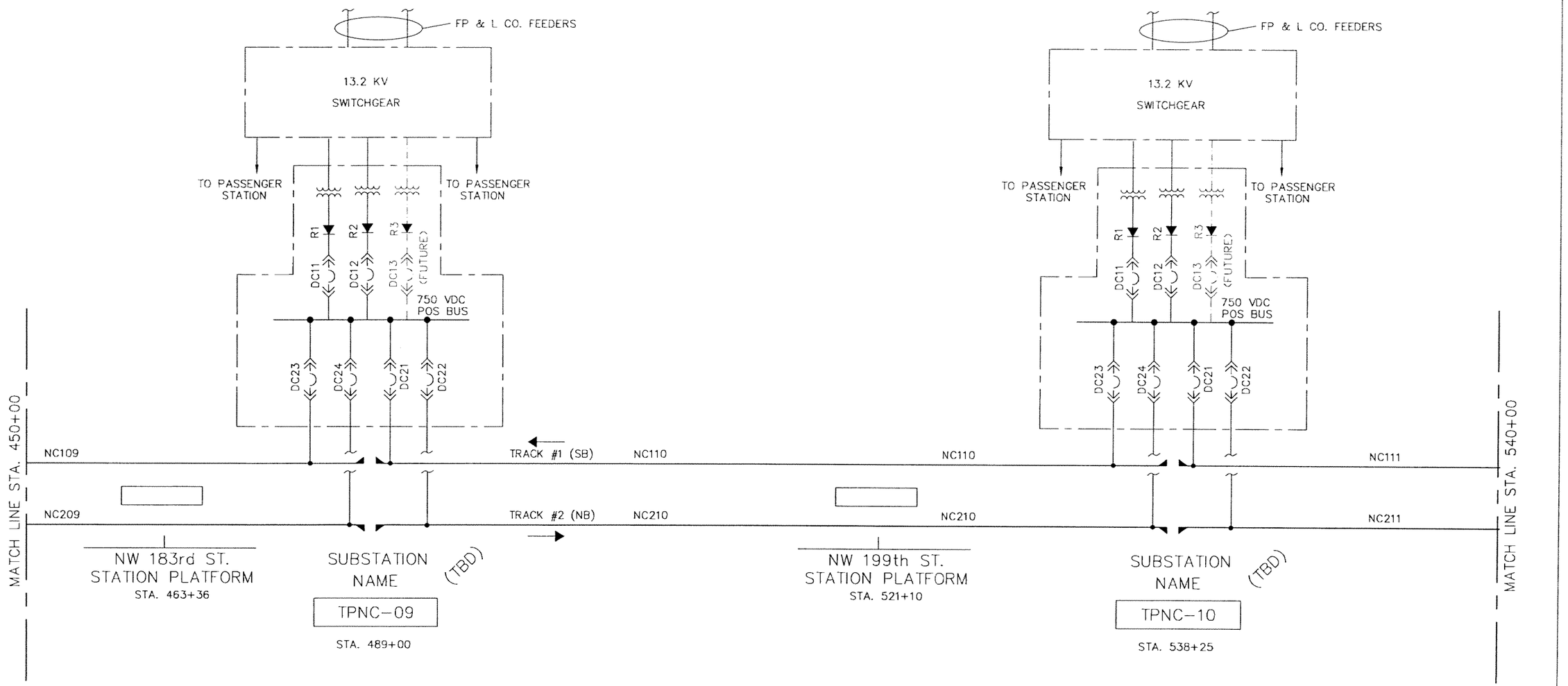

DDP	5/06						
Designed by	Date						
GK	5/06						
Drawn by	Date						
JCG	5/06						
Checked by	Date						
Approved by	Date	No.	Date	By / Chk	App.	Revisions	

NORTH CORRIDOR METRORAIL EXTENSION - PRELIMINARY ENGINEERING (100% SUBMITTAL)

MIAMI-DADE TRANSIT

PARSONS
7600 CORPORATE CENTER DRIVE, SUITE 500
MIAMI, FLORIDA 33126
PHONE: (786) 464-1000 FAX: (786) 845-7119
CERTIFICATE OF AUTHORIZATION NO. 1838

Approved | Date: MAY, 2006

Approved | Date

TRACTION POWER

ELECTRICAL SECTIONING DIAGRAM STA. 450+00 TO STA. 540+00

Scale: NTS | Drawing: TPW -110 | Sheet: 345

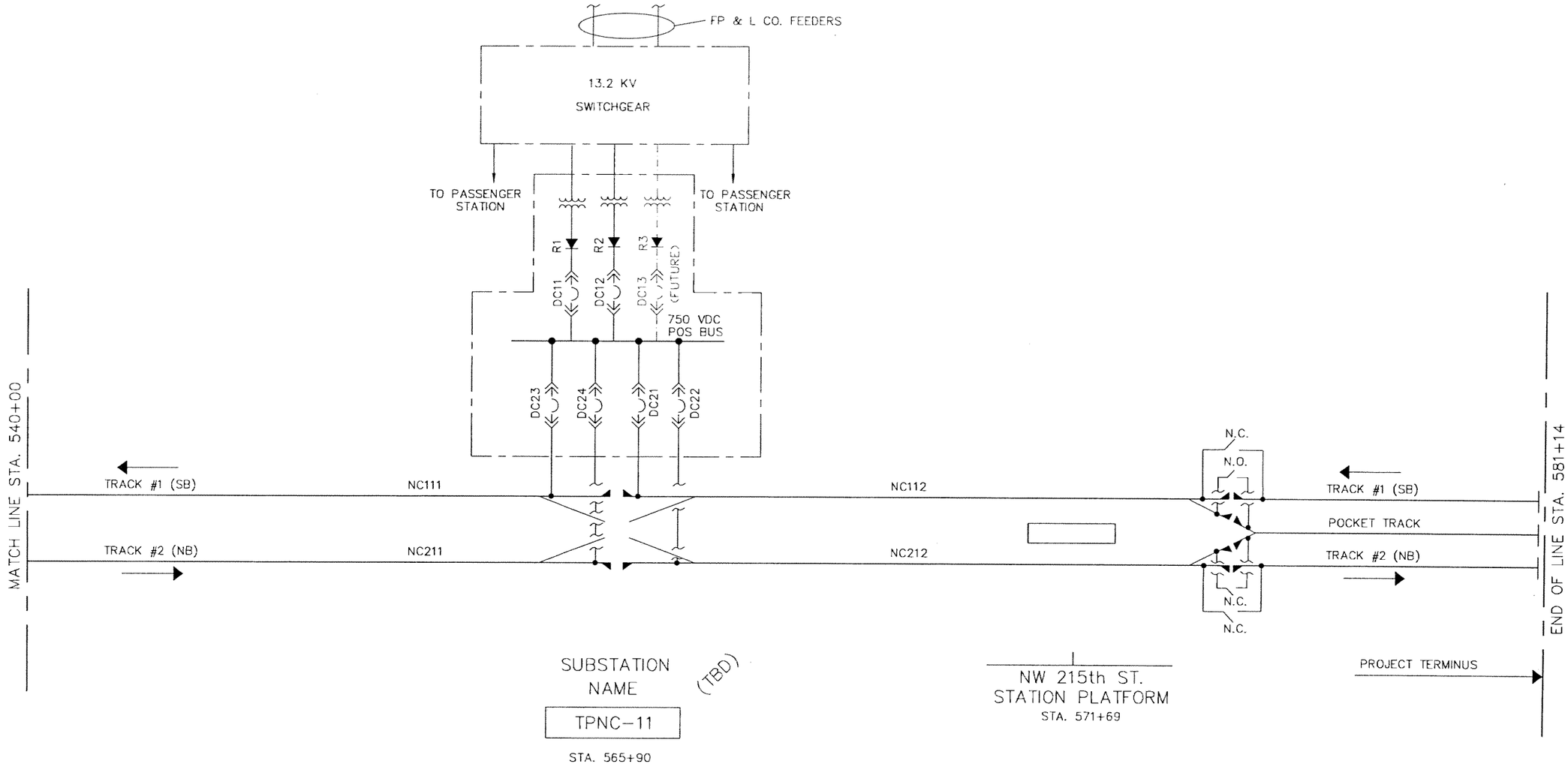

DDP 5/06 Designed by Date						
GK 5/06 Drawn by Date						
JCG 5/06 Checked by Date						
Approved by Date	No.	Date	By / Chk	App.	Revisions	

NORTH CORRIDOR METRORAIL EXTENSION - PRELIMINARY ENGINEERING (100% SUBMITTAL)

MIAMI-DADE TRANSIT

PARSONS
7600 CORPORATE CENTER DRIVE, SUITE 500
MIAMI, FLORIDA 33126
PHONE: (786) 464-1000 FAX: (786) 845-7119
CERTIFICATE OF AUTHORIZATION NO. 1638

Approved — Date: MAY, 2006

Approved — Date:

TRACTION POWER

ELECTRICAL SECTIONING DIAGRAM STA. 540+00 TO STA. 581+14

Scale: NTS | Drawing: TPW-111 | Sheet: 346

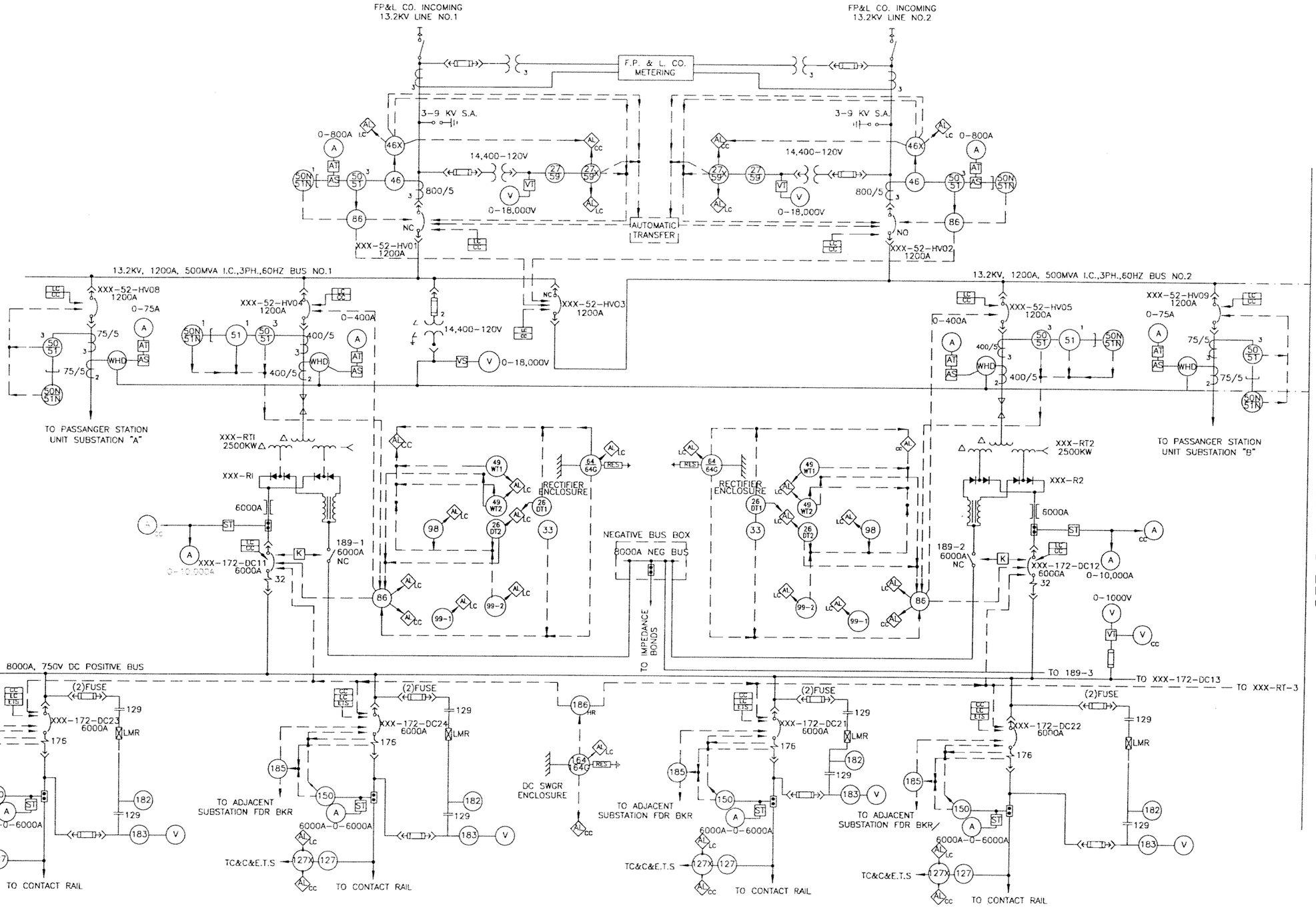

SEE DWG TPW-121

DDP	5/06							
Designed by	Date							
GK	5/06							
Drawn by	Date							
JCG	5/06							
Checked by	Date							
Approved by	Date	No.	Date	By / Chk	App.	Revisions		

NORTH CORRIDOR METRORAIL EXTENSION - PRELIMINARY ENGINEERING (100% SUBMITTAL)

MIAMI-DADE TRANSIT

PARSONS
7600 CORPORATE CENTER DRIVE, SUITE 500
MIAMI, FLORIDA 33126
PHONE: (786) 464-1000 FAX: (786) 845-7119
CERTIFICATE OF AUTHORIZATION NO. 1838

Approved | Date: MAY, 2006 | Approved | Date

TRACTION POWER

TYPICAL TP SUBSTATION METERING & RELAY SINGLE LINE DIAGRAM (1 OF 2)

Scale: NTS | Drawing: TPW -120 | Sheet: 347

NOTES:

1. EQUIPMENT SHOWN ON THIS DRAWING SHALL BE FUTURE.
2. THIS EQUIPMENT REPRESENTS THE MINIMUM EQUIPMENT REQUIRED TO ADD A FUTURE THIRD TRANSFORMER RECTIFIER.

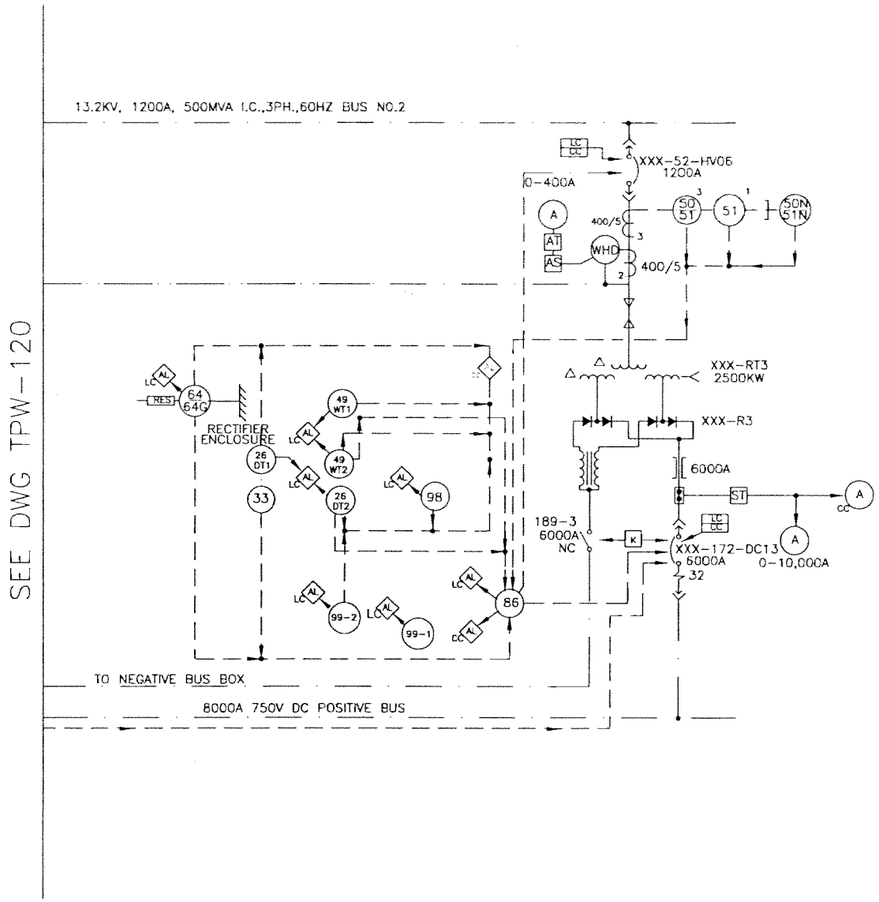

DDP 5/06 Designed by Date						NORTH CORRIDOR METRORAIL EXTENSION - PRELIMINARY ENGINEERING (100% SUBMITTAL)			TRACTION POWER
GK 5/06 Drawn by Date						MIAMI-DADE TRANSIT	PARSONS 7600 CORPORATE CENTER DRIVE, SUITE 500 MIAMI, FLORIDA 33126 PHONE: (786) 464-1000 FAX: (786) 845-7119 CERTIFICATE OF AUTHORIZATION NO. 1838		TYPICAL TP SUBSTATION METERING & RELAY SINGLE LINE DIAGRAM (2 OF 2)
JCG 5/06 Checked by Date									
Approved by Date	No.	Date	By / Chk	App.	Revisions		Approved MAY, 2006 Date	Approved Date	Scale NTS Drawing TPW-121 Sheet 348

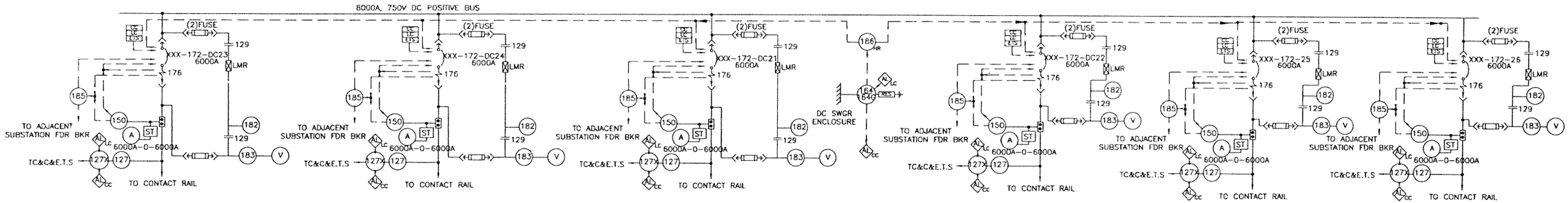

DDP Designed by	5/06 Date						
GK Drawn by	5/06 Date						
JCG Checked by	5/06 Date						
Approved by	Date	No.	Date	By / Chk	App.	Revisions	

NORTH CORRIDOR METRORAIL EXTENSION - PRELIMINARY ENGINEERING (100% SUBMITTAL)

MIAMI-DADE TRANSIT

PARSONS
7600 CORPORATE CENTER DRIVE, SUITE 500
MIAMI, FLORIDA 33126
PHONE: (786) 464-1000 FAX: (786) 845-7119
CERTIFICATE OF AUTHORIZATION NO. 1836

Approved MAY, 2006 Date

Approved Date

TRACTION POWER

TYPICAL GAP-TIE STATION METERING & RELAY SINGLE LINE DIAGRAM

Scale NTS Drawing TPW-125 Sheet 329

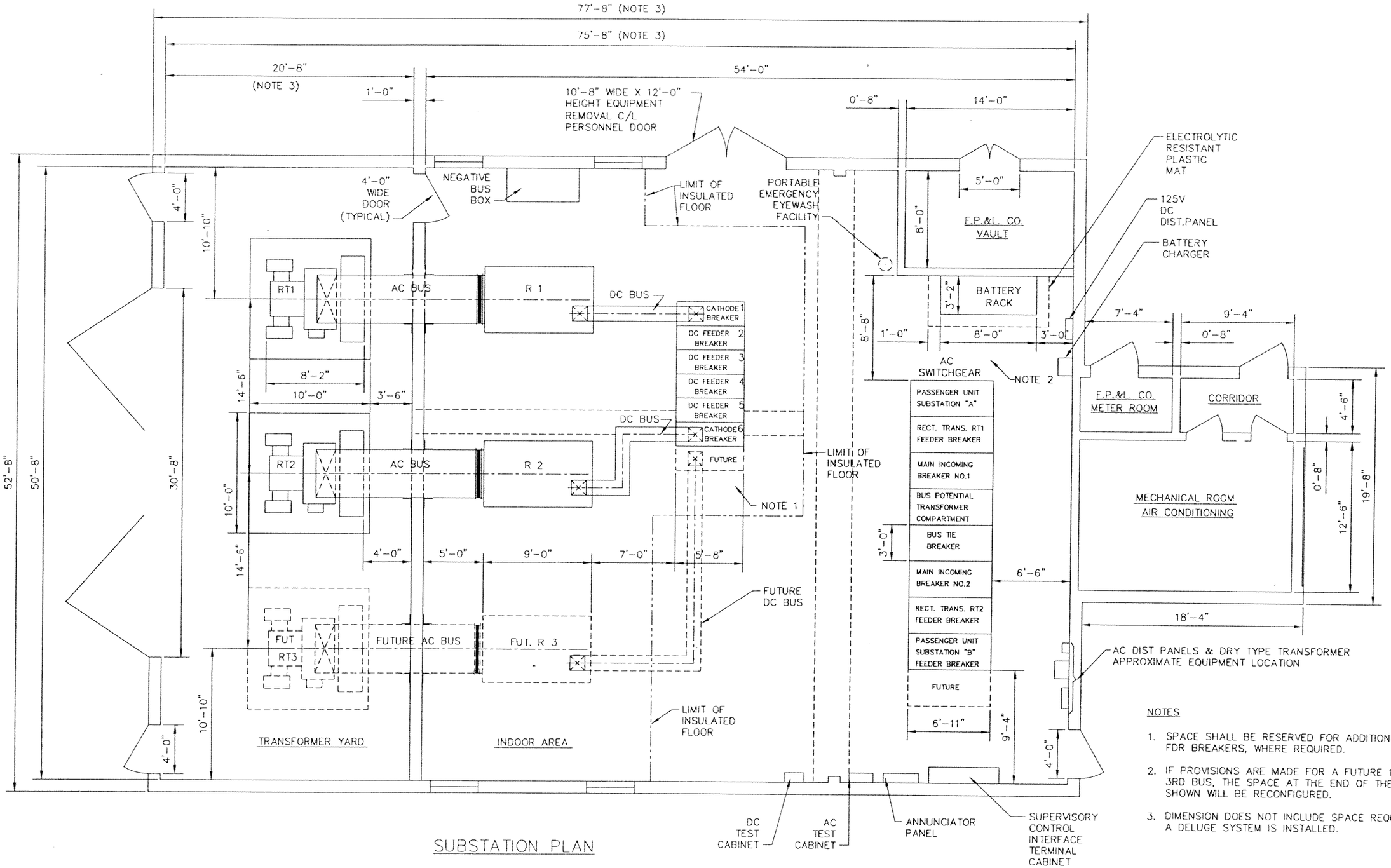

SUBSTATION PLAN

NOTES

1. SPACE SHALL BE RESERVED FOR ADDITIONAL DC FDR BREAKERS, WHERE REQUIRED.
2. IF PROVISIONS ARE MADE FOR A FUTURE 13.2KV 3RD BUS, THE SPACE AT THE END OF THE SWGR SHOWN WILL BE RECONFIGURED.
3. DIMENSION DOES NOT INCLUDE SPACE REQUIRED IF A DELUGE SYSTEM IS INSTALLED.

DDP Designed by	5/06 Date						
GK Drawn by	5/06 Date						
JCG Checked by	5/06 Date						
Approved by	Date	No.	Date	By / Chk	App.	Revisions	

NORTH CORRIDOR METRORAIL EXTENSION - PRELIMINARY ENGINEERING (100% SUBMITTAL)

MIAMI-DADE TRANSIT

PARSONS
7600 CORPORATE CENTER DRIVE, SUITE 500
MIAMI, FLORIDA 33126
PHONE: (786) 464-1000 FAX: (786) 845-7119
CERTIFICATE OF AUTHORIZATION NO. 1838

Approved MAY, 2006 Date

Approved Date

TRACTION POWER

TYPICAL TP SUBSTATION EQUIPMENT LAYOUT

Scale 1/4"=1" Drawing TPW-130 Sheet 350

DEVICE LEGEND

1. DC FEEDER BREAKER
2. BATTERIES
3. MECHANICAL & AIR CONDITIONING
4. ANNUNCIATOR PANEL
5. AC DISTRIBUTION PANEL
6. DC DISTRIBUTION PANEL
7. BATTERY CHARGER
8. DC BREAKER TEST PANEL
9. SUPERVISORY CONTROL INTERFACE CABINET
10. FIRE EXTINGUISHER

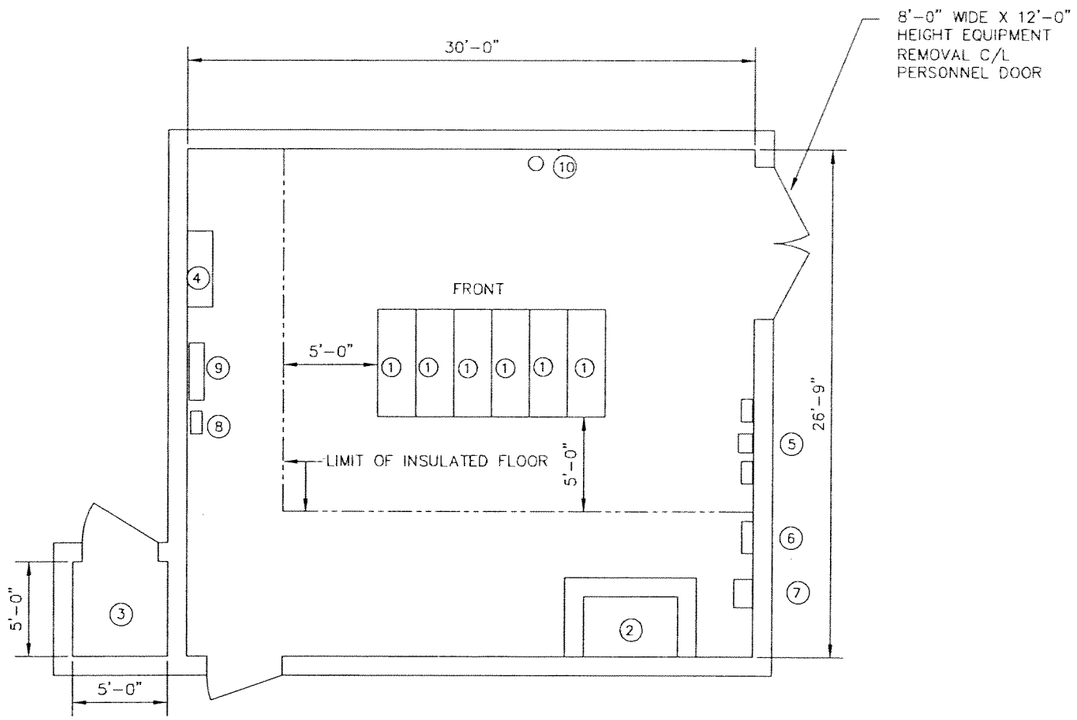

DDP Designed by	5/06 Date					
GK Drawn by	5/06 Date					
JCG Checked by	5/06 Date					
Approved by	Date	No.	Date	By / Chk	App.	Revisions

NORTH CORRIDOR METRORAIL EXTENSION - PRELIMINARY ENGINEERING (100% SUBMITTAL)

MIAMI-DADE TRANSIT

PARSONS
7500 CORPORATE CENTER DRIVE, SUITE 500
MIAMI, FLORIDA 33126
PHONE: (786) 464-1000 FAX: (786) 845-7119
CERTIFICATE OF AUTHORIZATION NO. 1838

Approved | Date MAY, 2006 | Approved | Date

TRACTION POWER

TYPICAL GAP-TIE STATION EQUIPMENT LAYOUT

Scale 1/4" = 1'-0" | Drawing TPW -135 | Sheet 351

LEGEND

TCR — TRAIN CONTROL ROOM

IMPEDANCE BOND

INSULATED RAIL JOINT

SIGNAL

TRAIN TO WAYSIDE COMMUNICATION LOOP

POWER SWITCH

CROSS BOND

PLATFORM

FUTURE PLATFORM

ABBREVIATIONS:

AH – AHEAD
BP – BUMPER POST SIGNAL
BK – BACK
CIH – CENTERAL INSTURMENT HOUSE
EB – EAST BOUND
EOP – EDGE OF PLATFORM
IB – IMPEADANCE BOND
IJ – INSULATED JOINT
PS – POINT OF SWITCH
SIG – SIGNAL
STA – STATIONING
T – TRACK
TBD – TO BE DETERMINED
TCR – TRAIN CONTROL ROOM
TWC – TRAIN TO WAYSIDE COMMUNICATION LOOP
WB – WESTBOUND

NOTES:

1. BLOCK DEFINITIONS SHOWN AS TYPICAL.
   FINAL ARRANGMENT TO BE DETERMINED BYAPPROVED
2. BLOCK DESIGN.

P:\Projects Active\Job_646\...ami North Corridor\PE Design - Signals\Task 3\100% Design Submittal\Drawings\100% Design submittal\SY-... 5/4/2006 12:45:37 PM

JRS 05/06 Designed by Date					
JRS 05/06 Drawn by Date					
RP 05/06 Checked by Date					
Approved by Date	No.	Date	By / Chk	App.	Revisions

NORTH CORRIDOR METRORAIL EXTENSION- PRELIMINARY ENGINEERING (100% SUBMITTAL)

MIAMI-DADE COUNTY — MIAMI-DADE TRANSIT

PARSONS
7600 CORPORATE CENTER DRIVE, SUITE 500
MIAMI, FLORIDA 33126
PHONE: (786) 464-1000 FAX: (786) 845-7119
CERTIFICATE OF AUTHORIZATION NO. 1838

Approved | Date | Approved | Date

TRAIN CONTROL

LEGENDS, SYMBOLS & ABBREVIATIONS

Scale NTS | Drawing SY-102 | Sheet 352

NOTES:

1. CAB RESPONSE ---------- OVERSPEED VELOCITY WITH ZERO ACCELERATION TRAIN SPEED GOVERNED BY THE UPPER TOLERANCE LIMIT OF THE LAST RECIEVED SPEED CODE.
2. OVERSPEED REACTION ---------- FULL ACCELERATION AS PER ..... OF THE SPECIFICATIONS.
3. BRAKE ASSURANCE TIMER ---------- FULL ACCELERATION AS PER .....OF THE SPECIFICATIONS.
4. POWER CUT AND BRAKE BUILD UP ---- LINEAR DECAY OF ACCELERATION (POWER CUT) AND LINEAR DECELERATION (BRAKE BUILD UP) TIME TO ACHIEVE THE GUARANTEED EMERGENCY BRAKE RATE.
5. BRAKE DISTANCE---------- DISTANCE IT TAKES THE TRAIN TO STOP WITH A GUARANTEED EMERGENCY BRAKE RATE OF 1.5 MILES PER HOUR PER SECOND (MPHPS).
6. OVERHANG ---------- 20 FEET

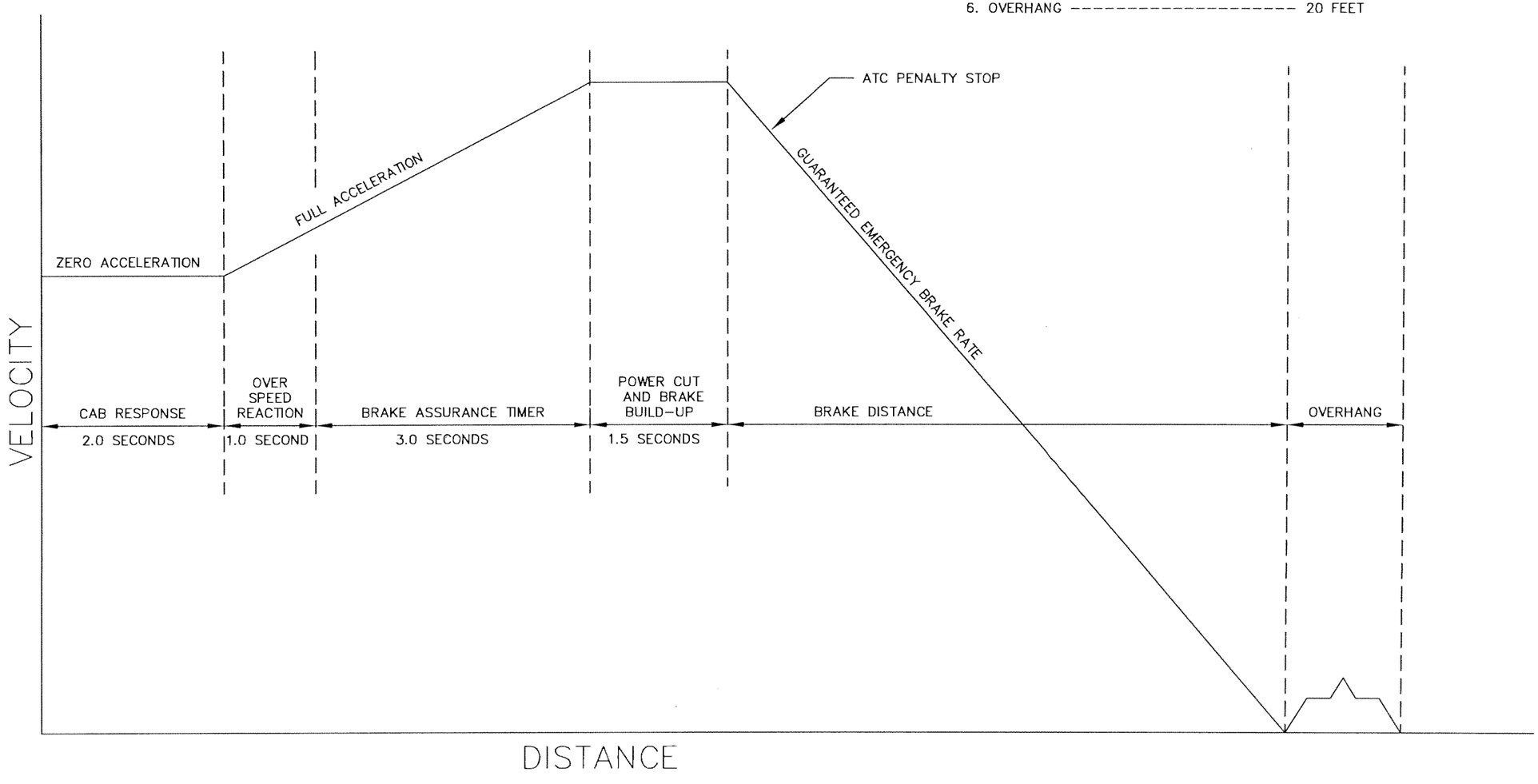

JRS Designed by	05/06 Date						
JRS Drawn by	05/06 Date						
RP Checked by	05/06 Date						
Approved by	Date	No.	Date	By / Chkd	App.	Revisions	

NORTH CORRIDOR METRORAIL EXTENSION- PRELIMINARY ENGINEERING (100% SUBMITTAL)

MIAMI-DADE COUNTY — MIAMI-DADE TRANSIT

PARSONS
7600 CORPORATE CENTER DRIVE, SUITE 500
MIAMI, FLORIDA 33126
PHONE: (786) 464-1000 FAX: (786) 845-7119
CERTIFICATE OF AUTHORIZATION NO. 1538

Approved ____ Date ____ Approved ____ Date ____

TRAIN CONTROL

EXAMPLE VEHICLE SAFE BRAKING MODEL

Scale NTS | Drawing SY-103 | Sheet 353

P:\Projects Active\Job_64(ami North Corridor\PE Design - Signals\Task 3\100% Design Submittal\Drawings\100% Design submittal\SY- 5/4/2006 11:15:55 AM

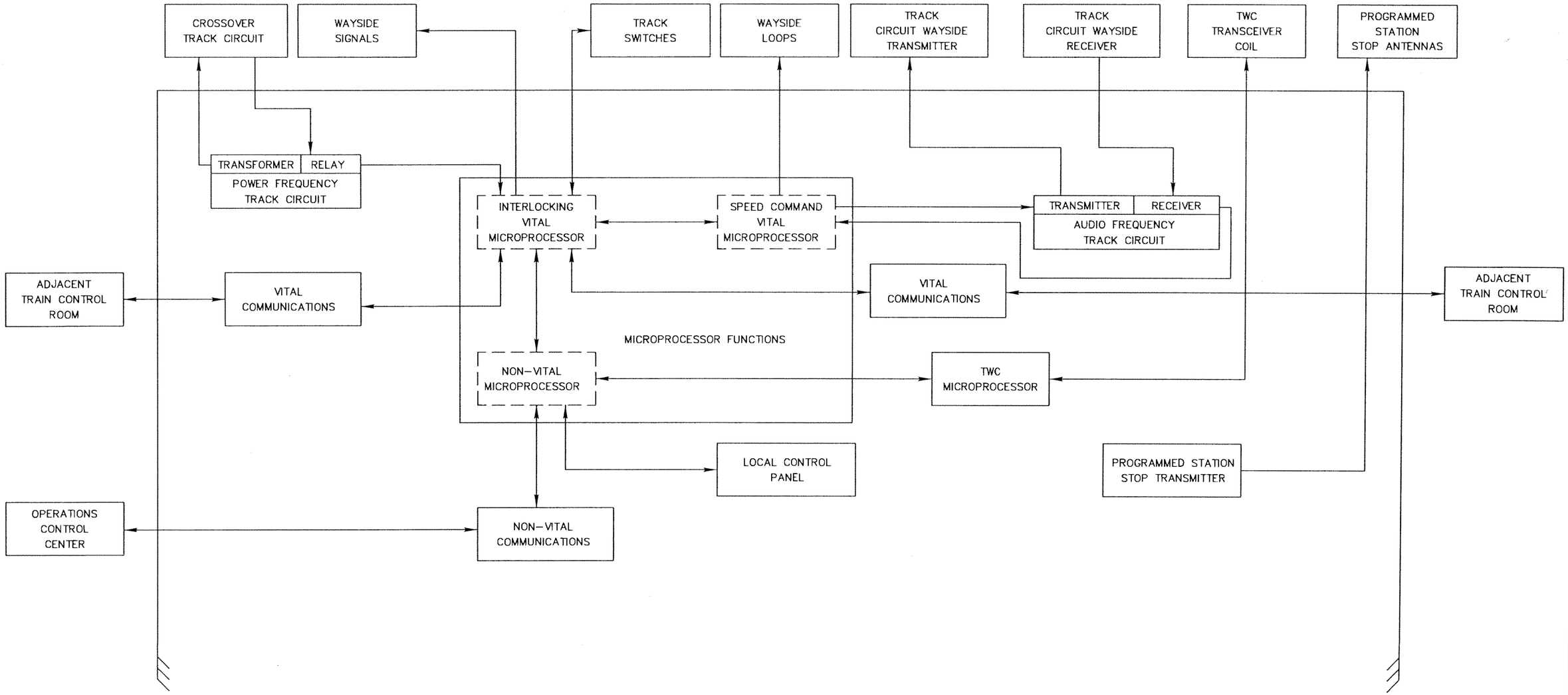

NOTE: – TRAIN CONTROL MICROPROCESSORS ARE REDUNDANT (NORMAL AND STANDBY)

JRS 05/06 Designed by Date						
JRS 05/06 Drawn by Date						
RP 05/06 Checked by Date						
Approved by Date	No.	Date	By / Chk	App.	Revisions	

NORTH CORRIDOR METRORAIL EXTENSION- PRELIMINARY ENGINEERING (100% SUBMITTAL)

MIAMI-DADE COUNTY

MIAMI-DADE TRANSIT

PARSONS
7600 CORPORATE CENTER DRIVE, SUITE 500
MIAMI, FLORIDA 33126
PHONE: (786) 464-1000 FAX: (786) 845-7119
CERTIFICATE OF AUTHORIZATION NO. 1838

Approved | Date | Approved | Date

TRAIN CONTROL

EXAMPLE INTERLOCKING
TRAIN CONTROL ROOM
FUNCTIONAL BLOCK DIAGRAM

Scale NTS | Drawing SY-104 | Sheet 354

P:\Projects Active\Job_64 ... ami North Corridor\PE Design - Signals\Task 3\100% Design Submittal\Drawings\100% Design submittal\SY... 5/4/2006 11:18:10 AM

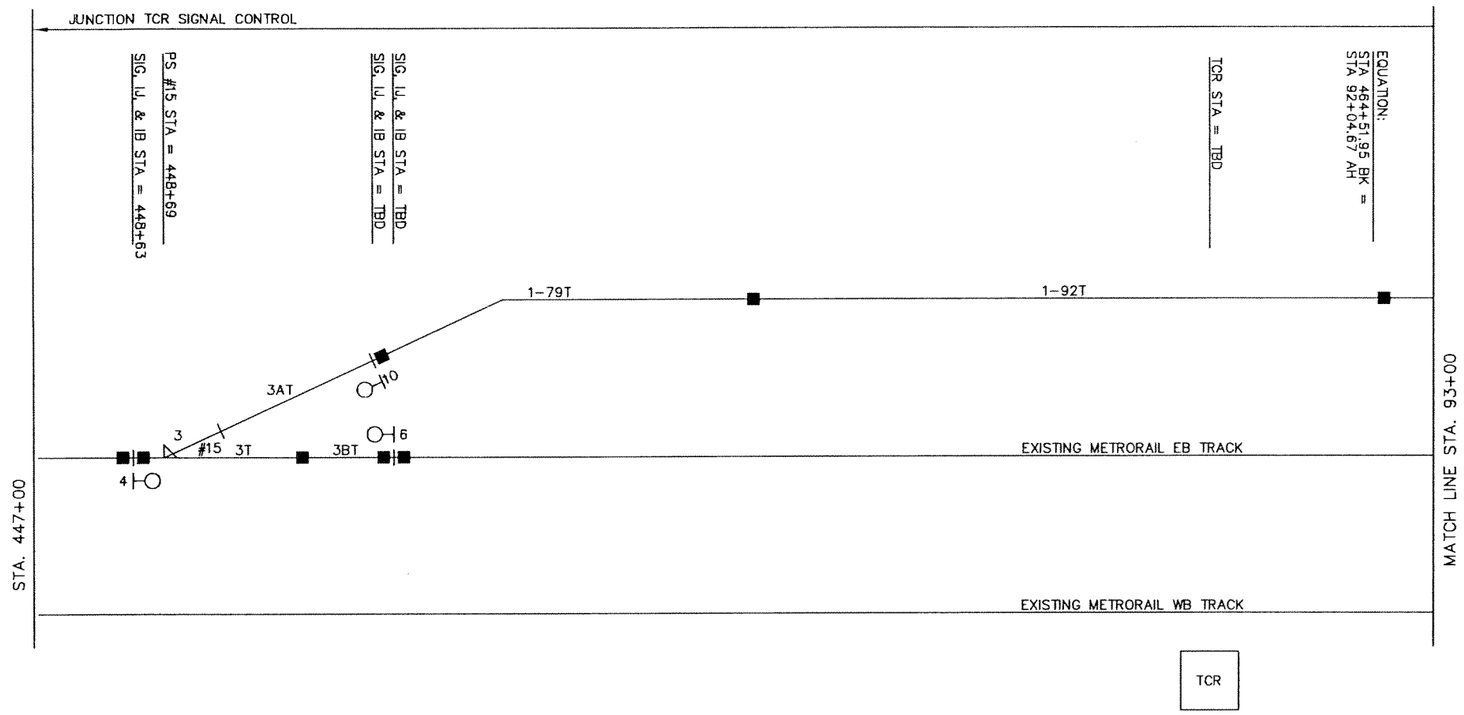

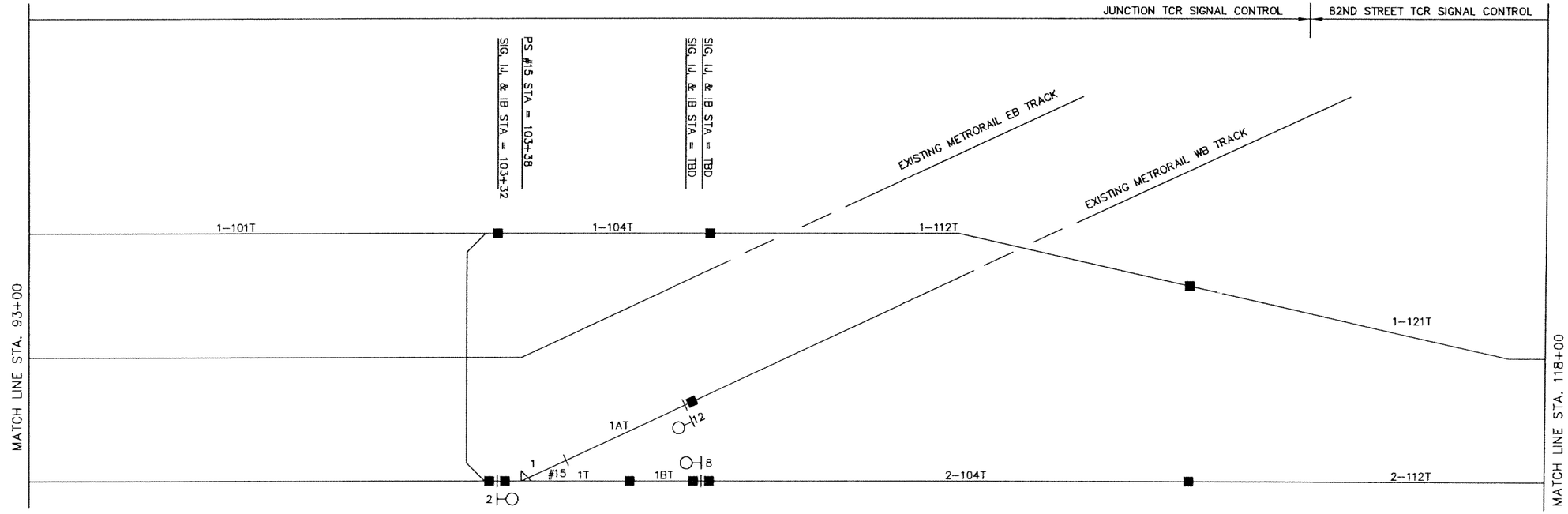

JRS Designed by	05/06 Date					NORTH CORRIDOR METRORAIL EXTENSION- PRELIMINARY ENGINEERING (100% SUBMITTAL)	TRAIN CONTROL
JRS Drawn by	05/06 Date					MIAMI-DADE COUNTY / MIAMI-DADE TRANSIT	SINGLE LINE TRACK SCHEMATIC STA. 447+00 – 118+00
RP Checked by	05/06 Date					PARSONS 7600 CORPORATE CENTER DRIVE, SUITE 500 MIAMI, FLORIDA 33126 PHONE: (786) 464-1000 FAX: (786) 845-7119 CERTIFICATE OF AUTHORIZATION NO. 1838	
Approved by	Date	No.	Date	By / Chk	App.	Revisions	Approved / Date / Approved / Date
							Scale NTS Drawing SY-105 Sheet 355

5/4/2006 11:20:47 AM
P:\Projects Active\Job 646 ami North Corridor\PE Design - Signals\Task 3\100% Design Submittal\Drawings\100% Design submittal\SY-

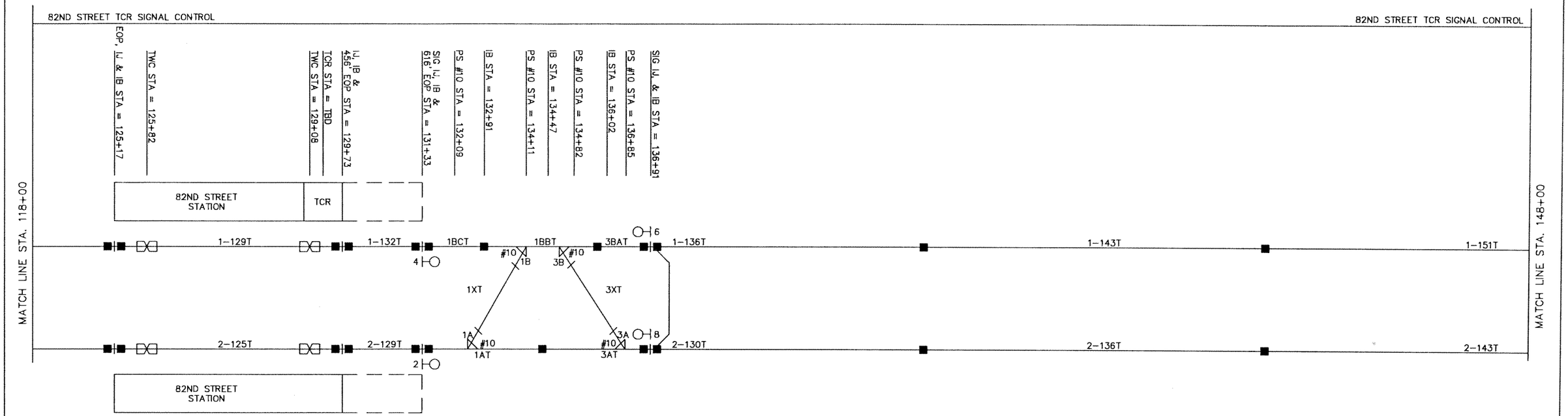

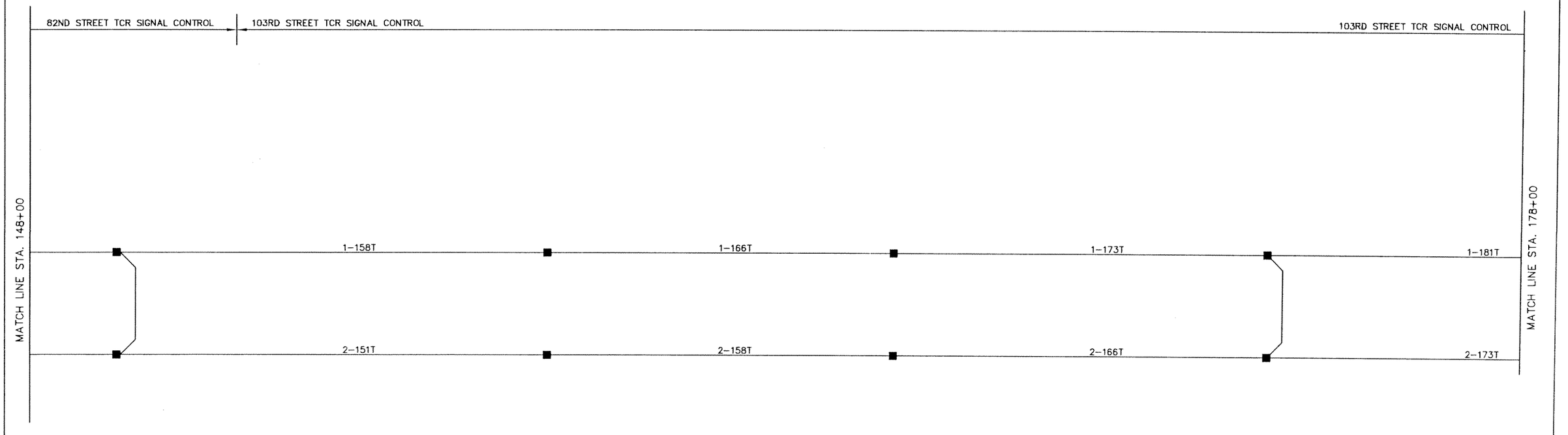

JRS 05/06 Designed by Date						
JRS 05/06 Drawn by Date						
RP 05/06 Checked by Date						
Approved by Date	No.	Date	By / Chk	App.	Revisions	

NORTH CORRIDOR METRORAIL EXTENSION- PRELIMINARY ENGINEERING (100% SUBMITTAL)

MIAMI-DADE COUNTY

MIAMI-DADE TRANSIT

PARSONS
7600 CORPORATE CENTER DRIVE, SUITE 500
MIAMI, FLORIDA 33126
PHONE: (786) 464-1000 FAX: (786) 845-7119
CERTIFICATE OF AUTHORIZATION NO. 1838

Approved Date

Approved Date

TRAIN CONTROL

SINGLE LINE TRACK SCHEMATIC
STA.118+00 – STA.178+00

Scale NTS | Drawing SY–106 | Sheet 354

P:\Projects Active\Job_64\...iami North Corridor\PE Design - Signals\Task 3\100% Design Submittal\Drawings\100% Design submittal\SY... 5/4/2006 11:46:14 AM

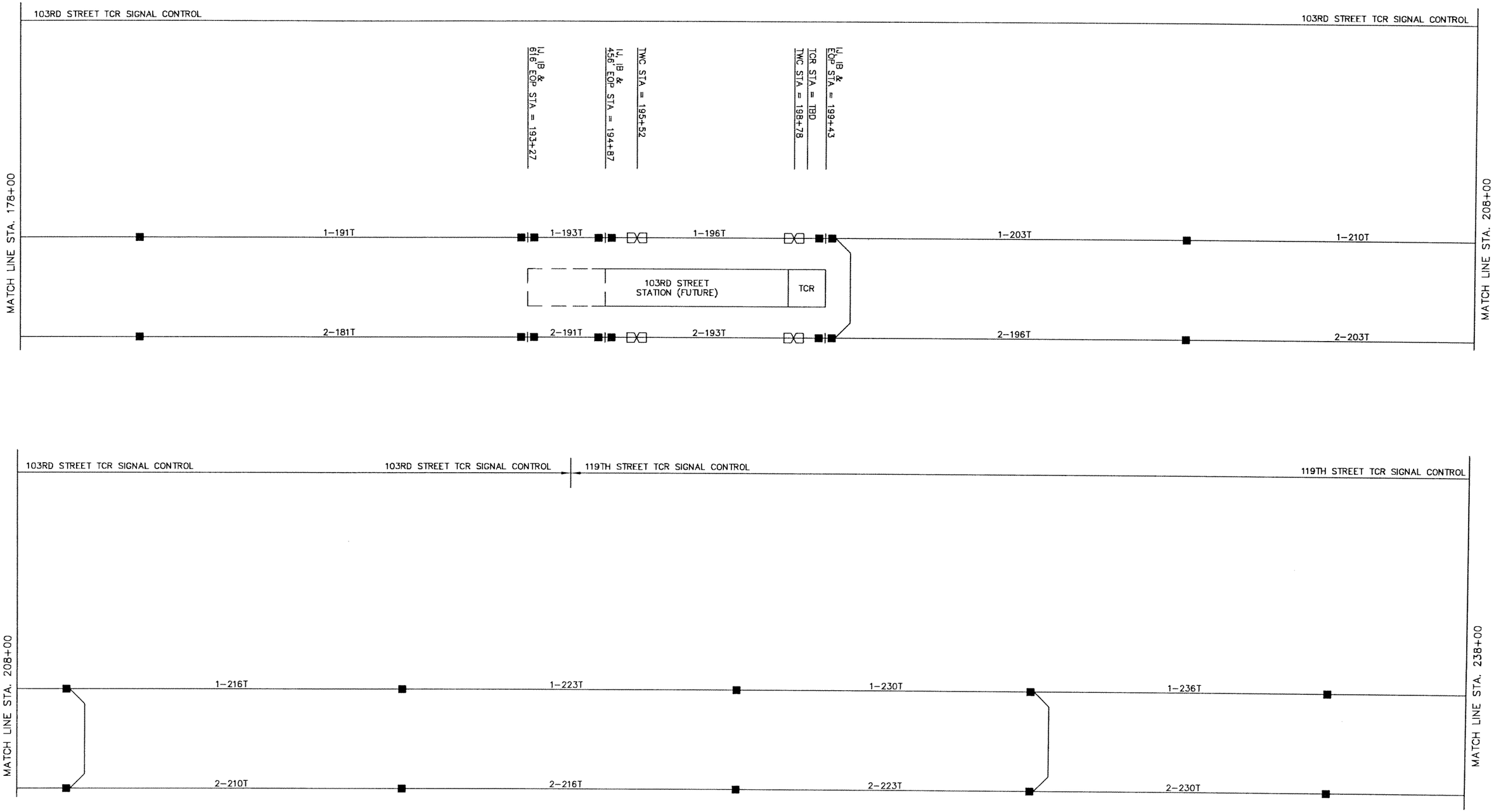

JRS Designed by	05/06 Date					
JRS Drawn by	05/06 Date					
RP Checked by	05/06 Date					
Approved by	Date	No.	Date	By / Chk	App.	Revisions

NORTH CORRIDOR METRORAIL EXTENSION- PRELIMINARY ENGINEERING (100% SUBMITTAL)

MIAMI-DADE COUNTY

MIAMI-DADE TRANSIT

PARSONS
7600 CORPORATE CENTER DRIVE, SUITE 500
MIAMI, FLORIDA 33126
PHONE: (786) 464-1000 FAX: (786) 845-7119
CERTIFICATE OF AUTHORIZATION NO. 1838

Approved | Date | Approved | Date

TRAIN CONTROL

SINGLE LINE TRACK SCHEMATIC
STA. 178+00 – STA. 238+00

Scale NTS | Drawing SY-107 | Sheet 2[illegible]

P:\Projects Active\Job_64 ... iami North Corridor\PE Design - Signals\Task 3\100% Design Submittal\Drawings\100% Design submittal\SY ... g, 5/4/2006 11:46:30 AM

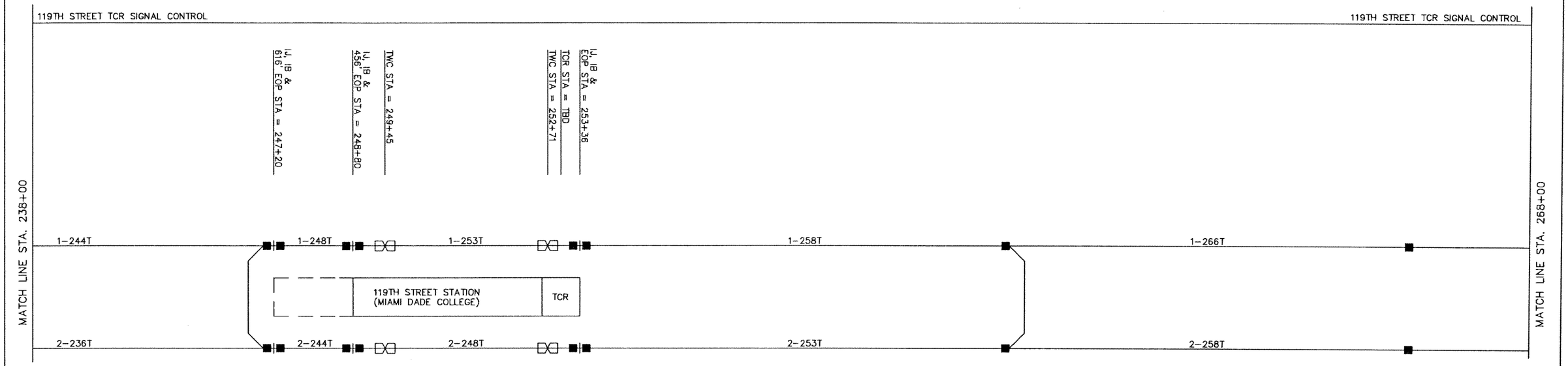

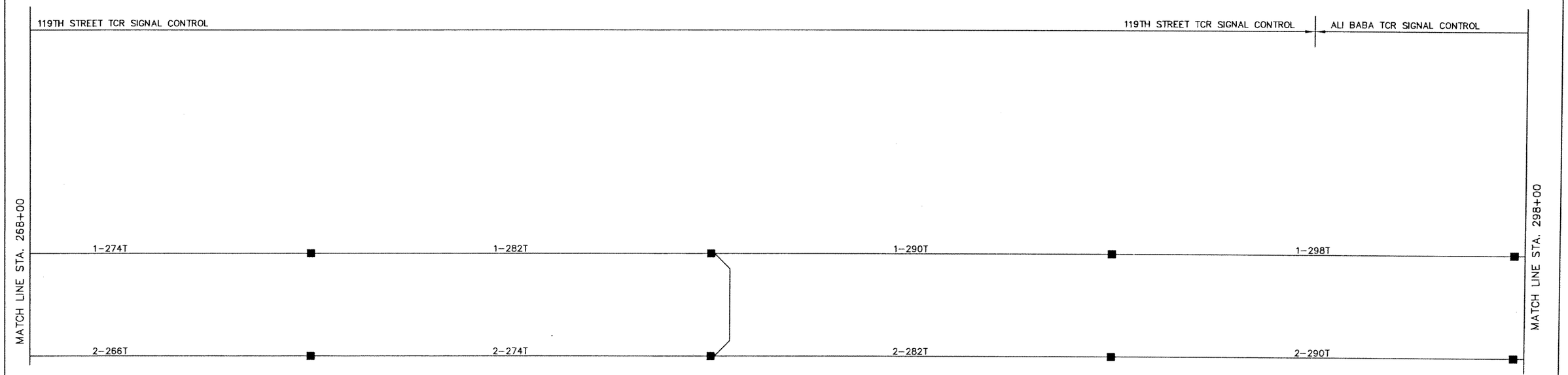

JRS Designed by 05/06 Date						NORTH CORRIDOR METRORAIL EXTENSION- PRELIMINARY ENGINEERING (100% SUBMITTAL)	TRAIN CONTROL
JRS Drawn by 05/06 Date						MIAMI-DADE COUNTY MIAMI-DADE TRANSIT	SINGLE LINE TRACK SCHEMATIC STA. 238+00 – STA. 298+00
RP Checked by 05/06 Date						PARSONS 7600 CORPORATE CENTER DRIVE, SUITE 500 MIAMI, FLORIDA 33126 PHONE: (786) 464-1000 FAX: (786) 845-7119 CERTIFICATE OF AUTHORIZATION NO. 1838	
Approved by Date	No.	Date	By / Chk.	Acc.	Revisions	Approved Date / Approved Date	Scale NTS Drawing SY-108 Sheet 259

P:\Projects ActiveJob_64(...ami North Corridor\PE Design - Signals\Task 3\100% Design Submittal\Drawings\100% Design submittal\SY- 5/4/2006 11:29:19 AM

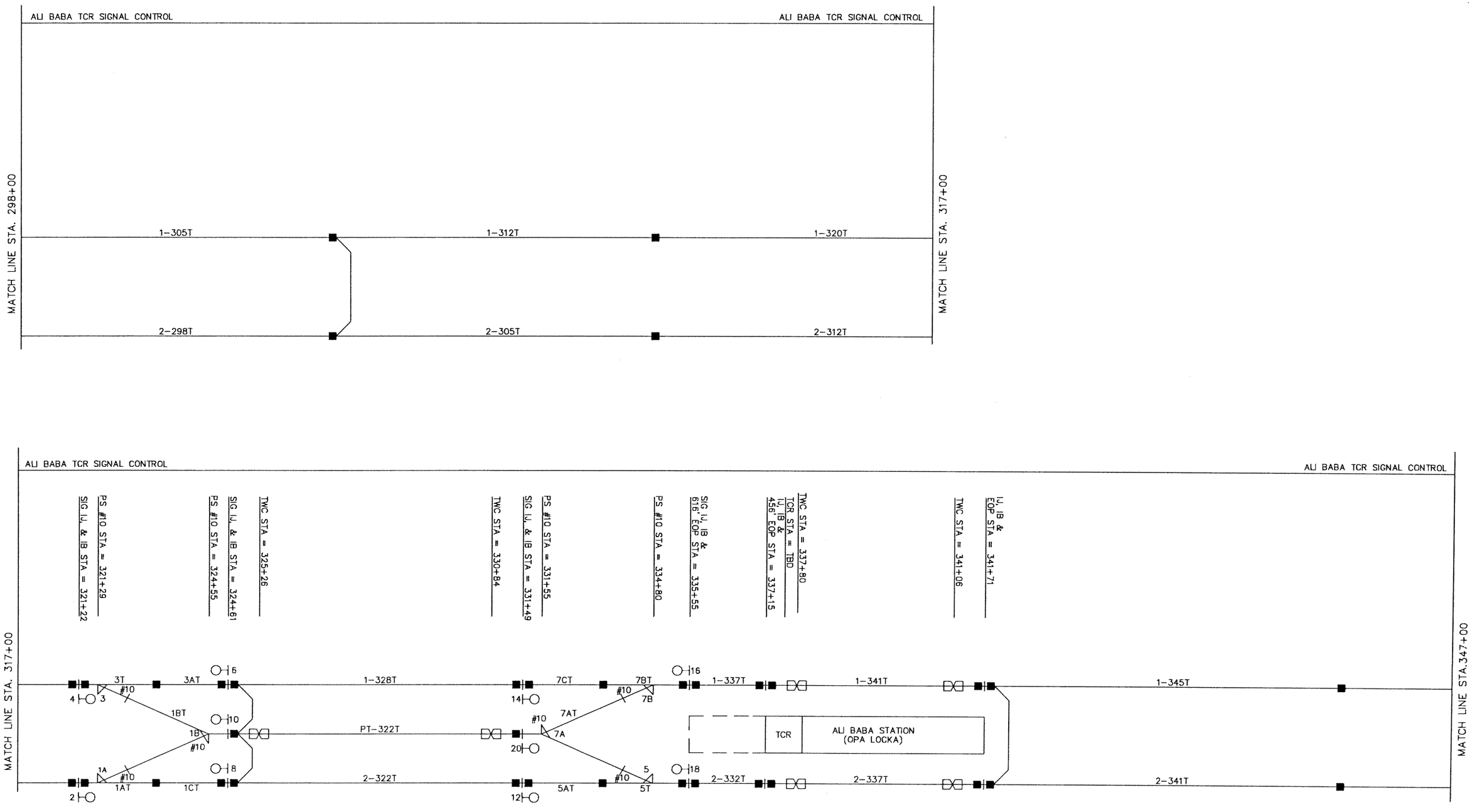

JRS Designed by	05/06 Date					
JRS Drawn by	05/06 Date					
RP Checked by	05/06 Date					
Approved by	Date	No.	Date	By / Chk	App	Revisions

NORTH CORRIDOR METRORAIL EXTENSION- PRELIMINARY ENGINEERING (100% SUBMITTAL)

MIAMI-DADE COUNTY

MIAMI-DADE TRANSIT

PARSONS
7600 CORPORATE CENTER DRIVE, SUITE 500
MIAMI, FLORIDA 33126
PHONE: (786) 464-1000 FAX: (786) 845-7119
CERTIFICATE OF AUTHORIZATION NO. 1838

Approved | Date | Approved | Date

TRAIN CONTROL

SINGLE LINE TRACK SCHEMATIC
STA. 298+00 – STA. 347+00

Scale NTS | Drawing SY-109 | Sheet 359

P:\Projects Active\Job_64 ... iami North Corridor\PE Design - Signals\Task 3\100% Design Submittal\Drawings\100% Design submittal\SY ... 5/4/2006 11:30:57 AM

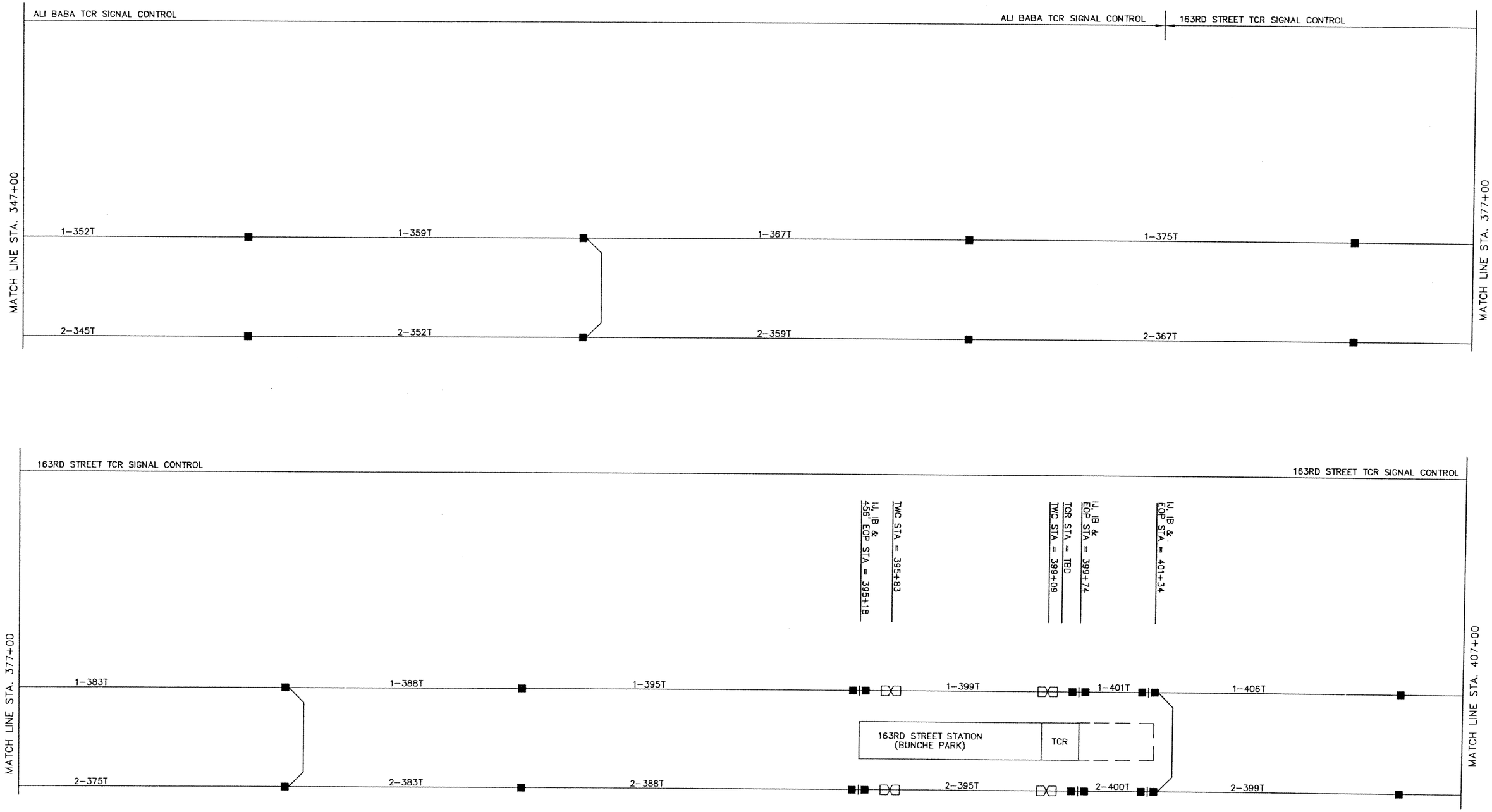

JRS Designed by	05/06 Date					
JRS Drawn by	05/06 Date					
RP Checked by	05/06 Date					
Approved by	Date	No.	Date	By / Chk	App.	Revisions

NORTH CORRIDOR METRORAIL EXTENSION- PRELIMINARY ENGINEERING (100% SUBMITTAL)

MIAMI-DADE COUNTY

MIAMI-DADE TRANSIT

PARSONS
7600 CORPORATE CENTER DRIVE, SUITE 500
MIAMI, FLORIDA 33126
PHONE: (786) 464-1000 FAX: (786) 845-7119
CERTIFICATE OF AUTHORIZATION NO. 1838

Approved | Date | Approved | Date

TRAIN CONTROL

SINGLE LINE TRACK SCHEMATIC
STA. 347+00 – STA. 407+00

Scale NTS | Drawing SY-110 | Sheet 360

P:\Projects Active\Job_6... Miami North Corridor\PE Design - Signals\Task 3\100% Design Submittal\Drawings\100% Design submittal\SY... g, 5/4/2006 11:32:50 AM

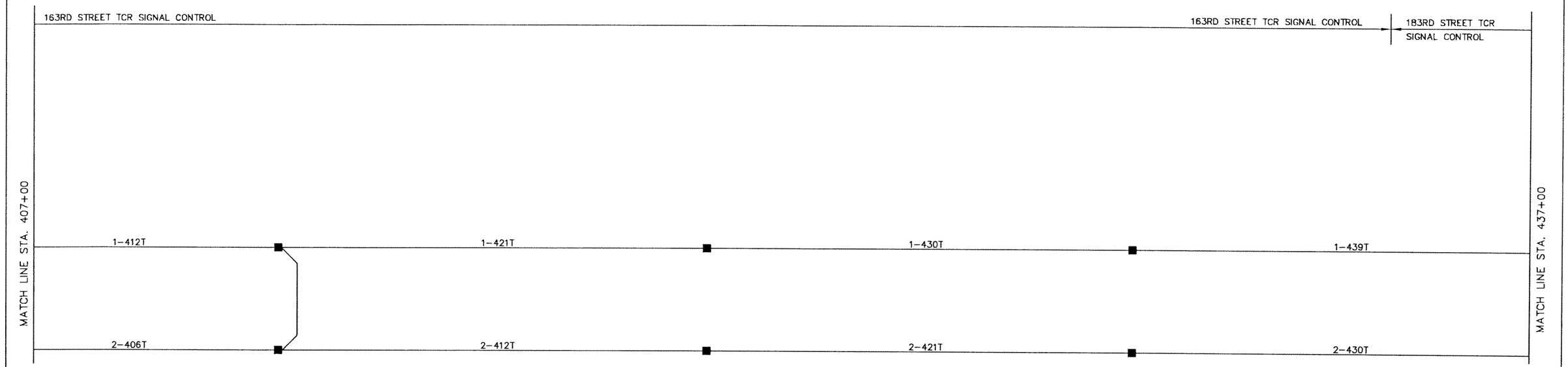

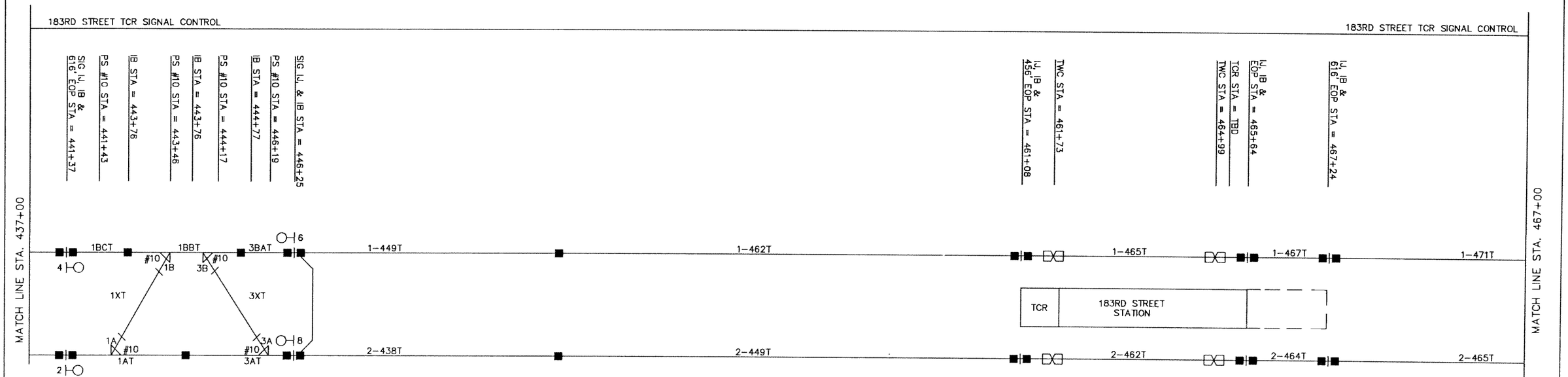

JRS 05/06 Designed by Date						
JRS 05/06 Drawn by Date						
RP 05/06 Checked by Date						
Approved by Date	No.	Date	By Chk	App.	Revisions	

NORTH CORRIDOR METRORAIL EXTENSION- PRELIMINARY ENGINEERING (100% SUBMITTAL)

MIAMI-DADE COUNTY

MIAMI-DADE TRANSIT

PARSONS
7600 CORPORATE CENTER DRIVE, SUITE 500
MIAMI, FLORIDA 33126
PHONE: (786) 464-1000 FAX: (786) 845-7119
CERTIFICATE OF AUTHORIZATION NO. 1838

Approved Date

Approved Date

TRAIN CONTROL

SINGLE LINE TRACK SCHEMATIC
STA. 407+00 – STA. 467+00

Scale NTS Drawing SY–111 Sheet

P:\Projects Active\Job. 60
Miami North Corridor\PE Design - Signals\Task 3\100% Design Submittal\Drawings\100% Design submittal\SY
g, 5/4/2006 11:34:36 AM

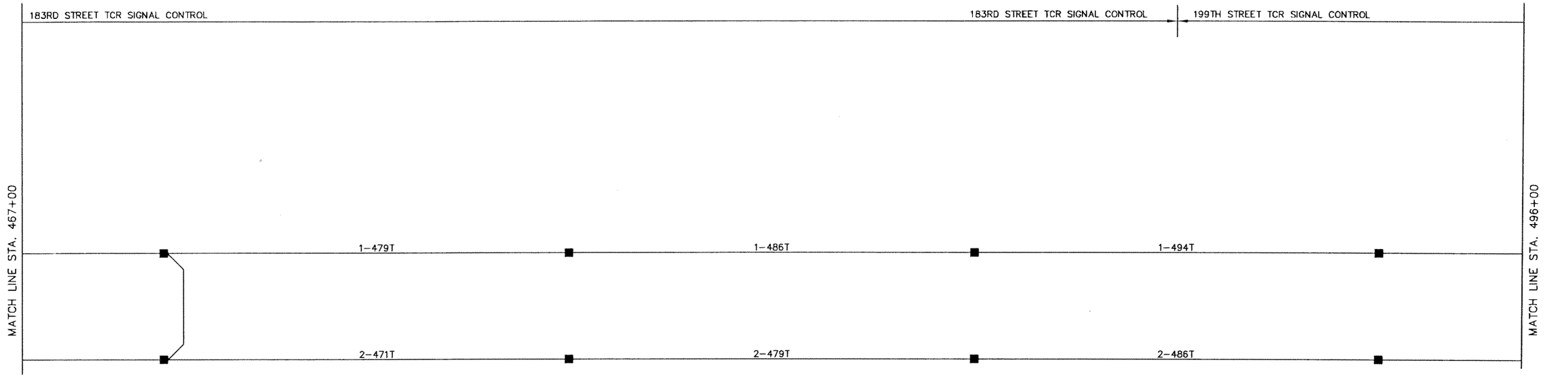

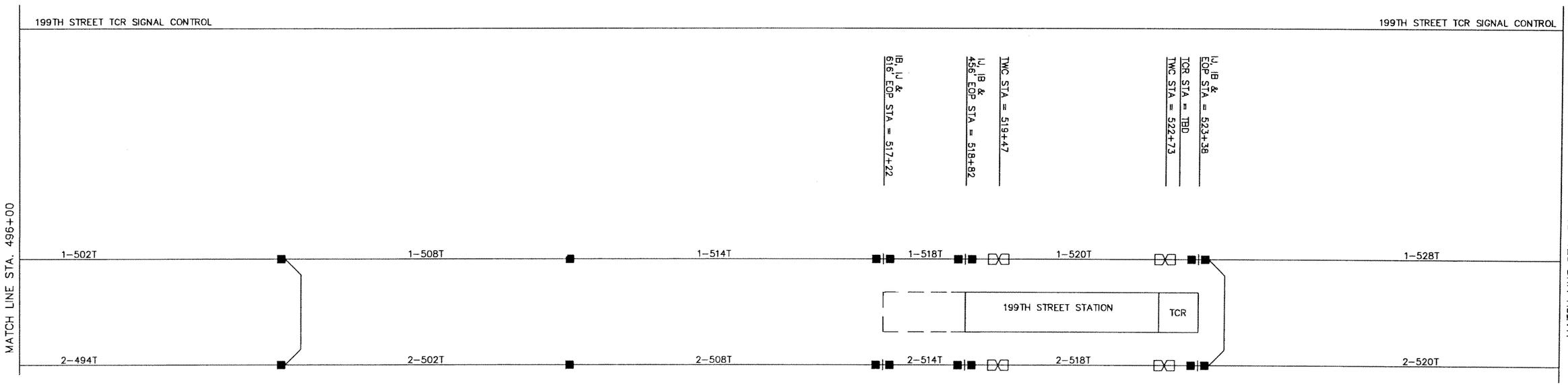

JRS 05/06 Designed By Date							
JRS 05/06 Drawn By Date							
RP 05/06 Checked By Date							
Approved By Date	No.	Date	By / Chk	App.	Revisions		

NORTH CORRIDOR METRORAIL EXTENSION- PRELIMINARY ENGINEERING (100% SUBMITTAL)

MIAMI-DADE COUNTY

MIAMI-DADE TRANSIT

PARSONS
7600 CORPORATE CENTER DRIVE, SUITE 500
MIAMI, FLORIDA 33126
PHONE: (786) 464-1000 FAX: (786) 845-7119
CERTIFICATE OF AUTHORIZATION NO. 1638

Approved Date Approved Date

TRAIN CONTROL

SINGLE LINE TRACK SCHEMATIC
STA. 467+00 – STA. 526+00

Scale NTS Drawing SY-112 Sheet 362

P:\Projects Active\Job_64... iami North Corridor\PE Design - Signals\Task 3\100% Design Submittal\Drawings\100% Design submittal\SY... 5/4/2006 11:46:59 AM

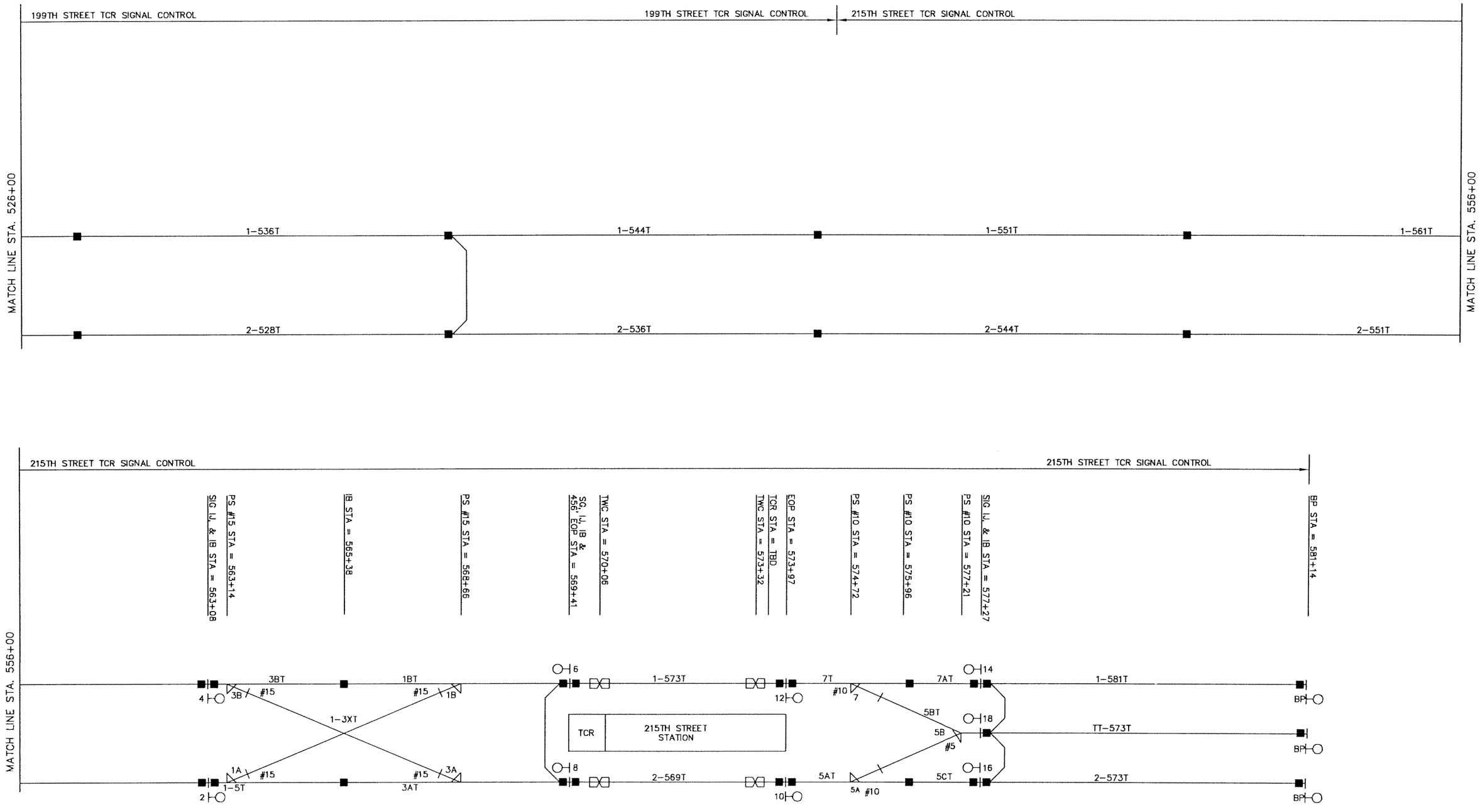

JRS Designed by	05/06 Date					
JRS Drawn by	05/06 Date					
RP Checked by	05/06 Date					
Approved by	Date	No.	Date	By / Chk	App.	Revisions

NORTH CORRIDOR METRORAIL EXTENSION- PRELIMINARY ENGINEERING (100% SUBMITTAL)

MIAMI-DADE COUNTY

MIAMI-DADE TRANSIT

PARSONS
7600 CORPORATE CENTER DRIVE, SUITE 500
MIAMI, FLORIDA 33126
PHONE: (786) 464-1000 FAX: (786) 845-7119
CERTIFICATE OF AUTHORIZATION NO. 1838

Approved | Date | Approved | Date

TRAIN CONTROL

SINGLE LINE TRACK SCHEMATIC
STA. 526+00 – STA. 586+00

Scale NTS | Drawing SY-113 | Sheet 363

P:\Projects Active\Job_64... ami North Corridor\PE Design - Signals\Task 3\100% Design Submittal\Drawings\100% Design submittal\SY-... 5/4/2006 11:37:35 AM

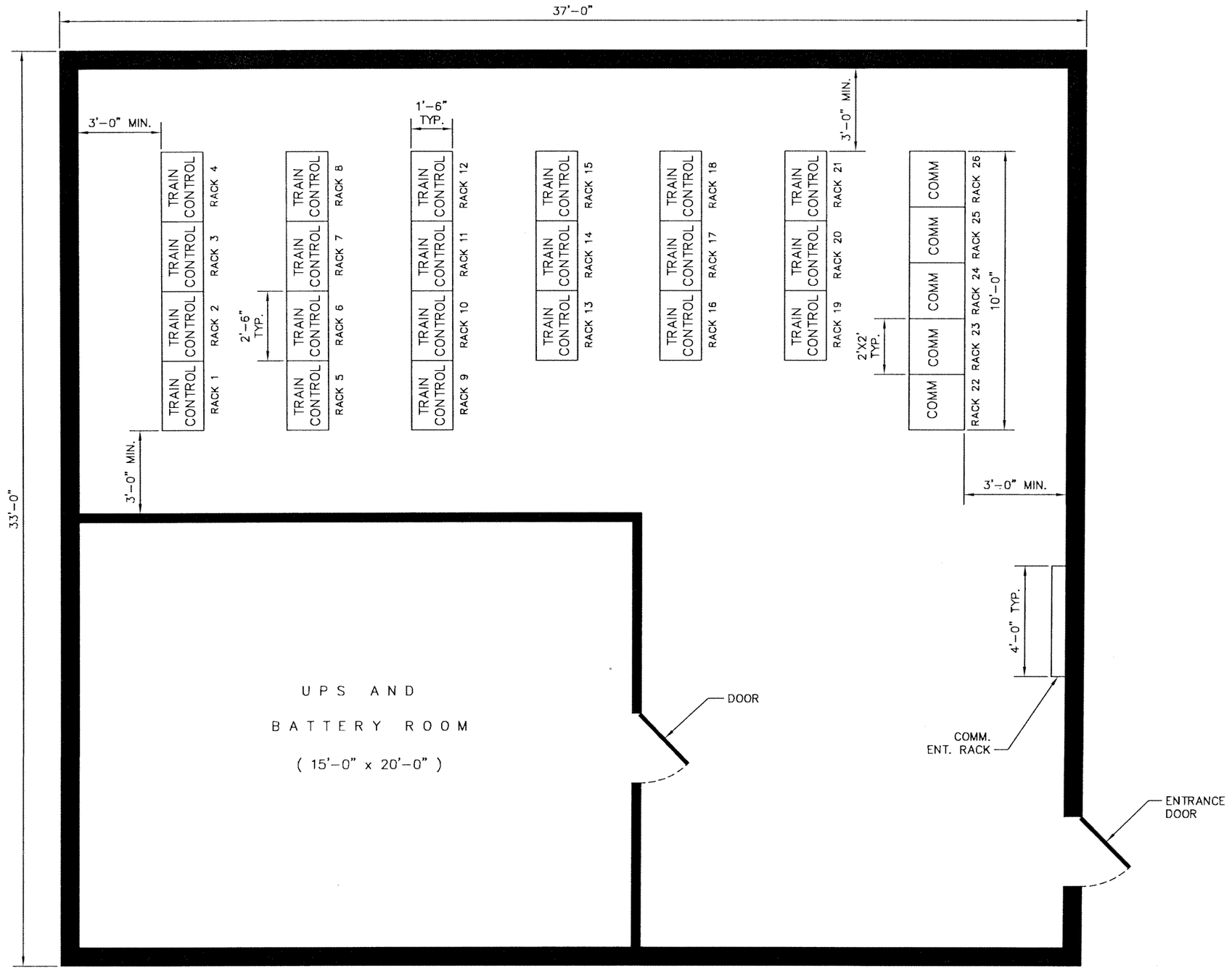

JRS 05/06 Designed by Date	NORTH CORRIDOR METRORAIL EXTENSION- PRELIMINARY ENGINEERING (100% SUBMITTAL)		TRAIN CONTROL
JRS 05/06 Drawn by Date	MIAMI-DADE COUNTY / MIAMI-DADE TRANSIT	PARSONS 7600 CORPORATE CENTER DRIVE, SUITE 500 MIAMI, FLORIDA 33126 PHONE: (786) 464-1000 FAX: (786) 845-7119 CERTIFICATE OF AUTHORIZATION NO. 1838	EXAMPLE TRAIN CONTROL AND COMMUNICATIONS EQUIPMENT ROOM LAYOUT
RP 05/06 Checked by Date			
Approved by Date	No. Date By Chk App Revisions	Approved Date / Approved Date	Scale NTS Drawing SY-114 Sheet 36

5/4/2006 12:59:31 PM
P:\Projects ActiveJob_640 ami North Corridor\PE Design - Signals\Task 3\100% Design Submittal\Drawings\100% Design submittal\SY-

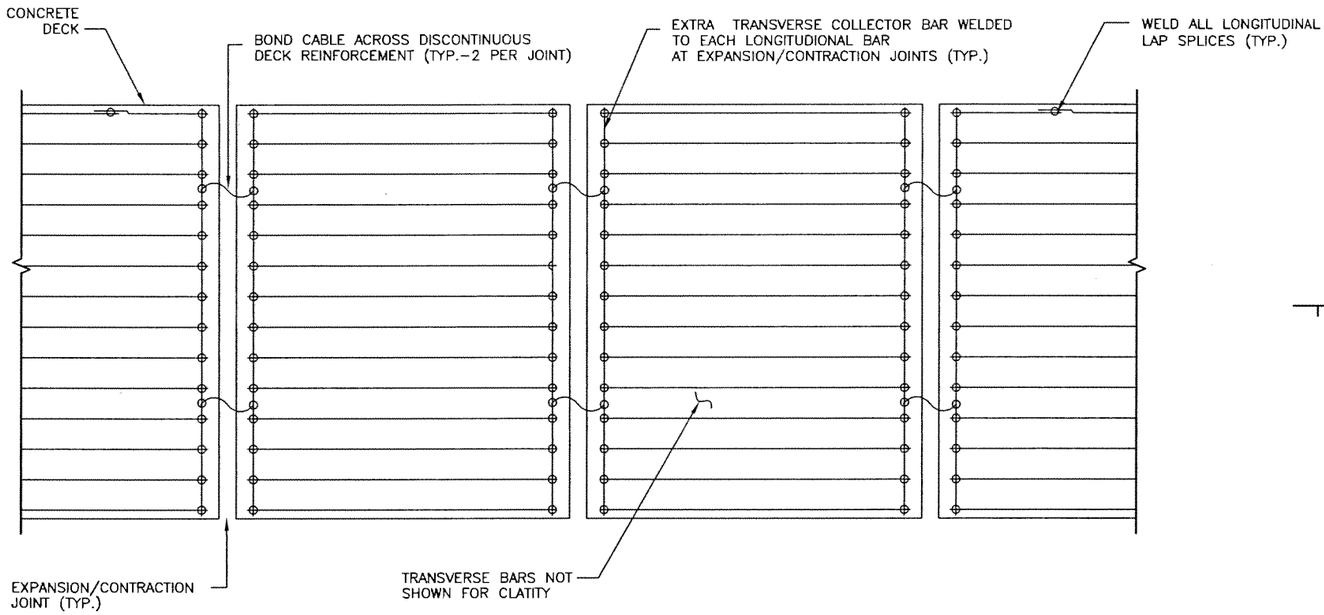

BONDING OF TOP LAYER REINFORCEMENT

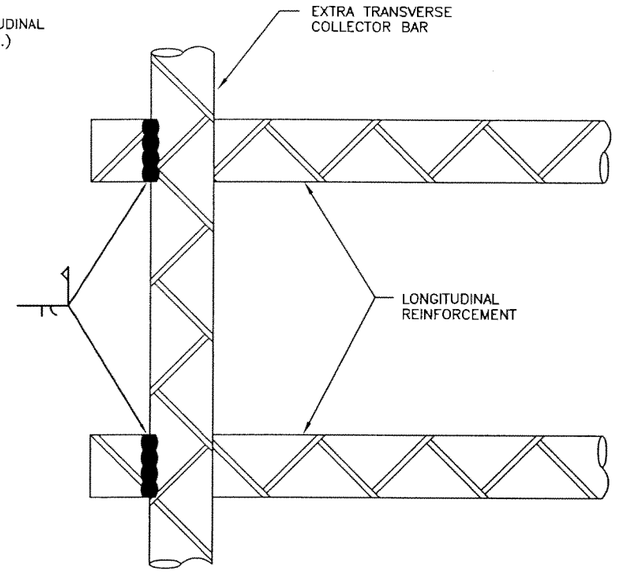

TRANSVERSE COLLECTOR BAR

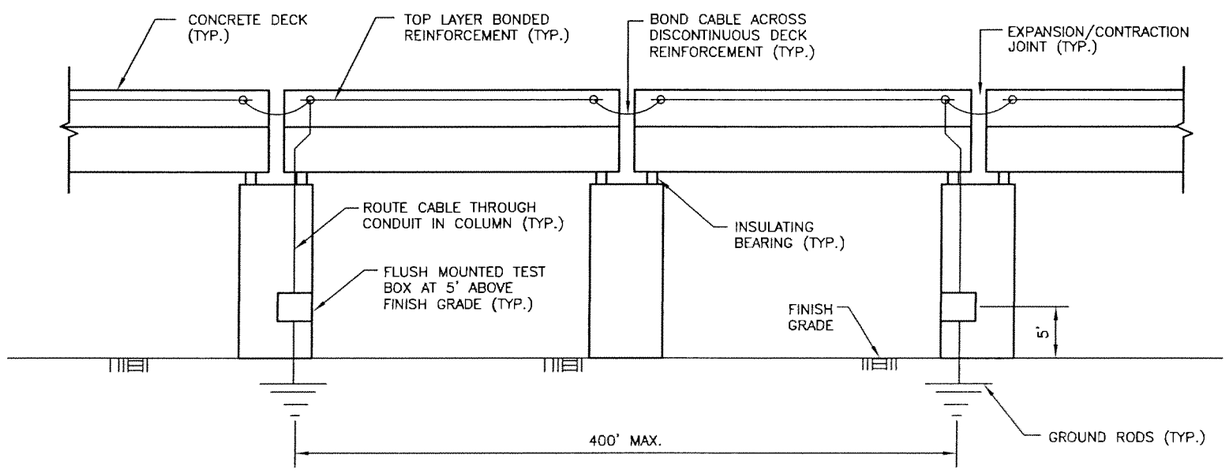

BRIDGE BONDING SCHEMATIC

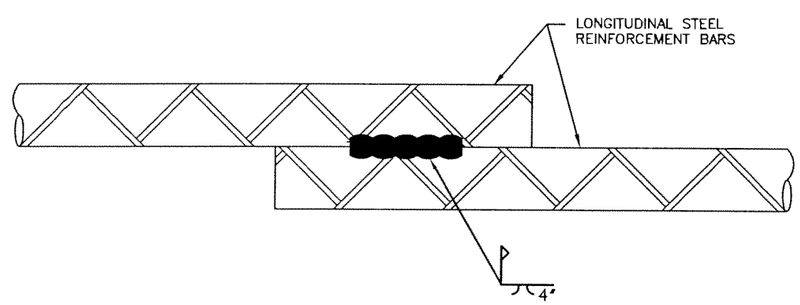

LONGITUDINAL LAP SPLICE

REINFORCEMENT WELDING DETAILS

KM 2/06 Designed by Date						
GK 2/14/06 Drawn by Date						
JB 5/06 Checked by Date						
Approved by Date	No.	Date	By/Chk	App.	Revisions	

NORTH CORRIDOR METRORAIL EXTENSION- PRELIMINARY ENGINEERING (100% SUBMITTAL)

MIAMI-DADE COUNTY

MIAMI-DADE TRANSIT

PARSONS
7600 CORPORATE CENTER DRIVE, SUITE 500
MIAMI, FLORIDA 33126
PHONE: (786) 464-1000 FAX: (786) 845-7119
CERTIFICATE OF AUTHORIZATION NO. 1838

Approved | Date | Approved | Date

CORROSION CONTROL

GUIDEWAY STRAY CURRENT CONTROL DETAILS - 1

Scale NTS | Drawing CC-102 | Sheet 365

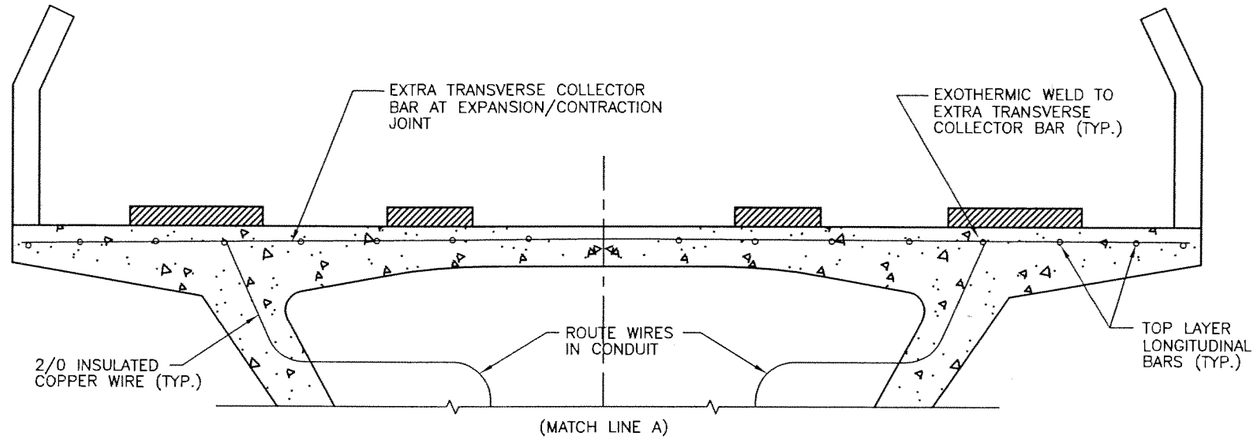

BONDED REINFORCEMENT GROUND CONNECTIONS

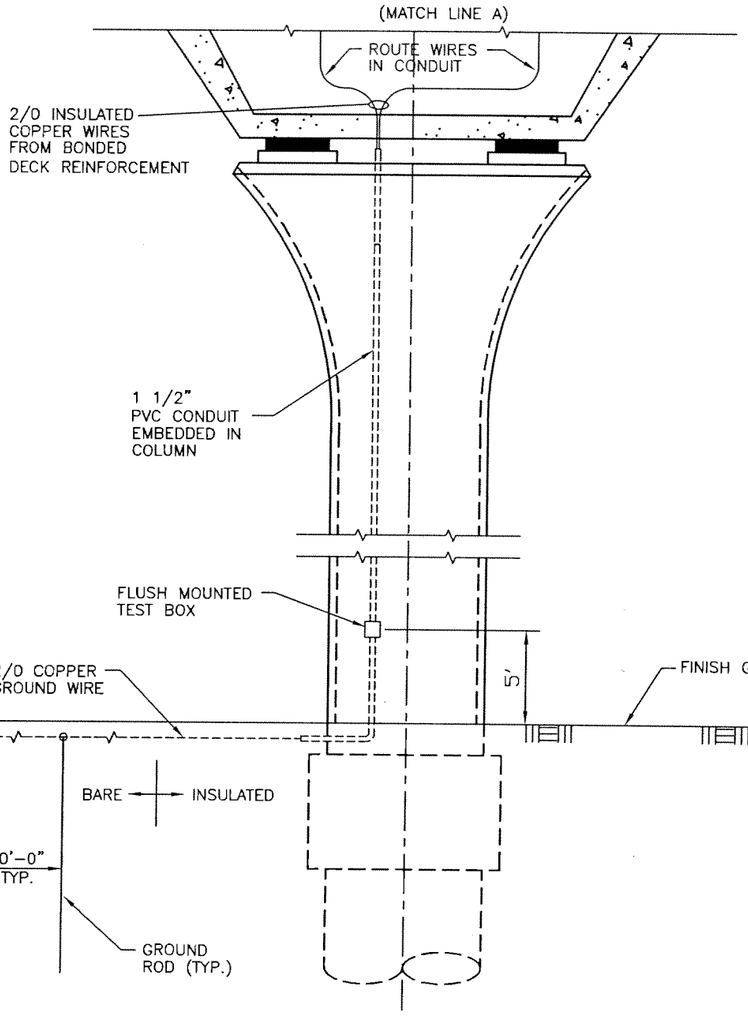

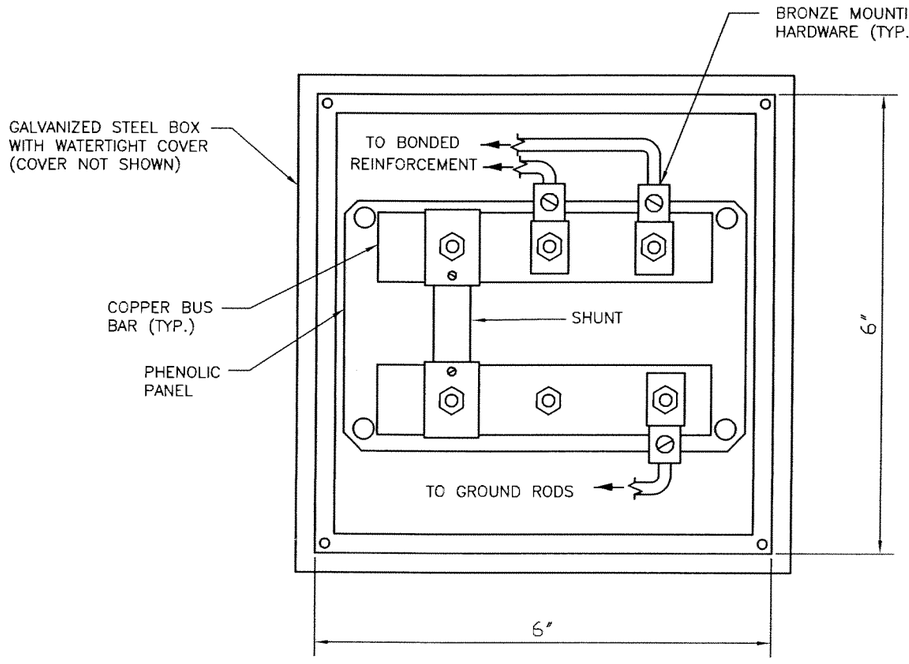

FLUSH MOUNTED TEST BOX (6"x6"x4")

STRAY CURRENT CONTROL & TEST FACILITY

KM 2/06 Designed by Date							
GK 2/06 Drawn by Date							
JB 5/06 Checked by Date							
Approved by Date	No.	Date	By Chk	App.	Revisions		

NORTH CORRIDOR METRORAIL EXTENSION- PRELIMINARY ENGINEERING (100% SUBMITTAL)

MIAMI-DADE COUNTY — MIAMI-DADE TRANSIT

PARSONS
7600 CORPORATE CENTER DRIVE, SUITE 500
MIAMI, FLORIDA 33126
PHONE: (786) 464-1000 FAX: (786) 845-7119
CERTIFICATE OF AUTHORIZATION NO. 1838

Approved | Date | Approved | Date

CORROSION CONTROL

GUIDEWAY STRAY CURRENT CONTROL DETAILS - 2

Scale NTS | Drawing CC-103 | Sheet 366

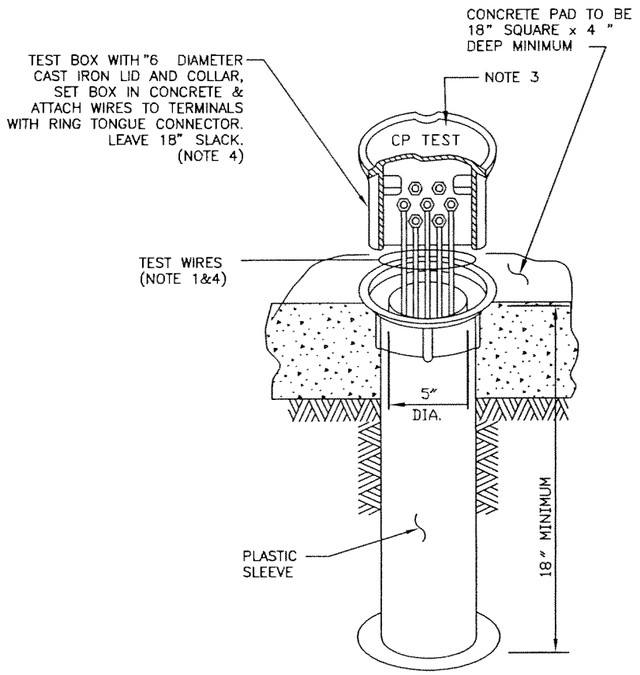

AT-GRADE TEST BOX DETAIL

SEE NOTES 2 AND 5

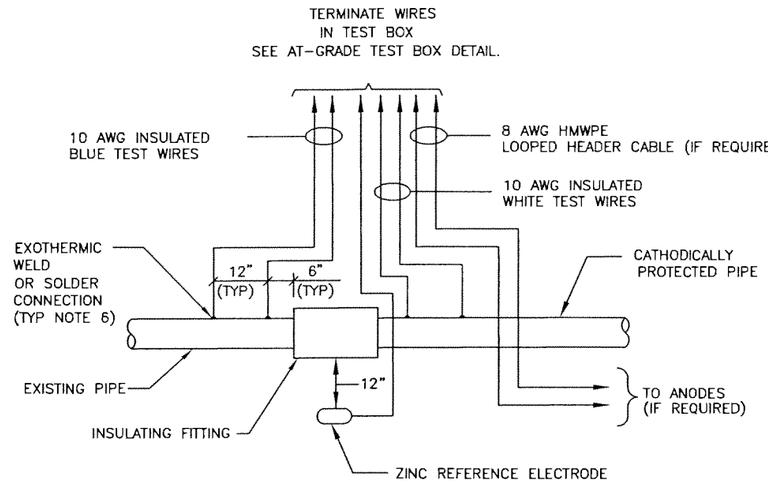

BURIED INSULATING FITTING TEST STATION

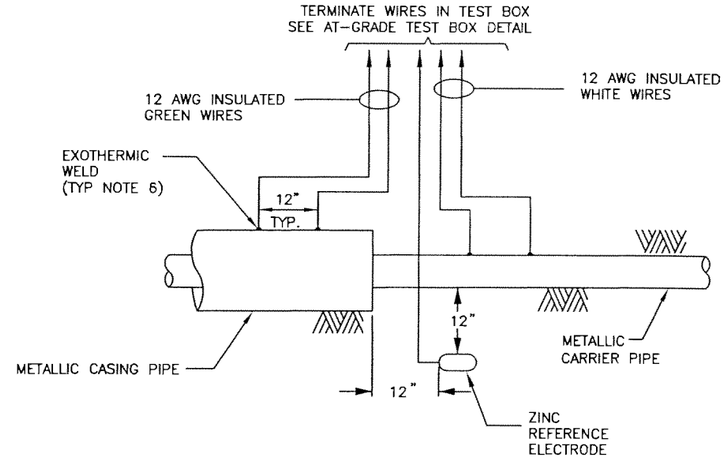

CASING TEST STATION

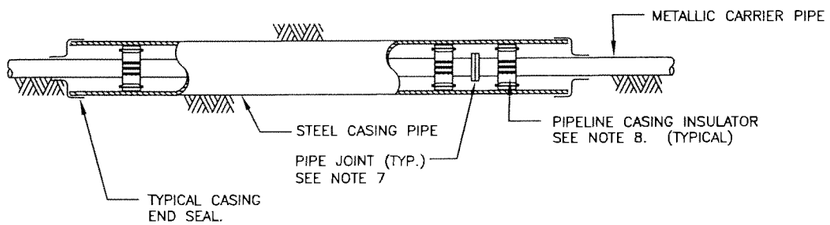

CASING PIPE DETAIL

(SEE CASING TEST STATION DETAIL)

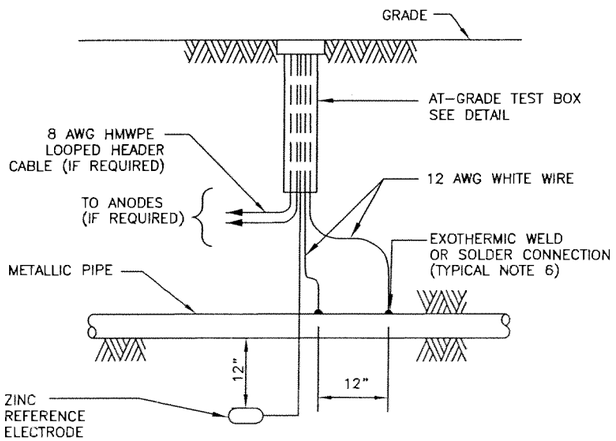

PIPE ACCESS TEST STATION

NOTES:

1. PROVIDE THE NUMBER, SIZE, TYPE, ETC. OF TEST WIRES FOR THE APPLICABLE SYSTEM. WIRES TO BE LOOSE LAY AND BACKFILLED WITH SAND. NO STONES OVER 1/4" DIAMETER.
2. IDENTIFY CABLES IN EACH BOX USING NON-METALLIC TAGS OR PRESSURE SENSITIVE LABELS.
3. UTILITY OWNERS INITIALS AND "CP TEST" SHALL BE PERMANENTLY CAST ON TEST STATION LID.
4. RING TONGUE CONNECTORS SHALL BE ATTACHED TO TEST WIRES USING A CRIMPING TOOL SPECIFICALLY DESIGNED FOR USE WITH CONNECTORS.
5. LOCATE AT-GRADE TEST BOX AT ACCESSIBLE LOCATION OUTSIDE OF PAVED VEHICULAR TRAFFIC LANES.
6. EXOTERMIC WELDS SHALL BE USED ON FERROUS METALLIC PIPING. SOLDER CONNECTIONS SHALL BE USED ON COPPER PIPING.
7. 1" MINIMUM CLEARANCE REQUIRED BETWEEN MAXIMUM FLANGE OR PIPE JOINT O.D. AND CASING I.D.
8. PIPELINE CASING INSULATORS SHALL BE SPACED AS DESCRIBED IN THE SPECIFICATIONS.

KM 2/06 Designed by Date							
GK 2/06 Drawn by Date							
JB 5/06 Checked by Date							
Approved by Date	No.	Date	By / Chk	App.	Revisions		

NORTH CORRIDOR METRORAIL EXTENSION- PRELIMINARY ENGINEERING (100% SUBMITTAL)

MIAMI-DADE COUNTY — MIAMI-DADE TRANSIT

PARSONS
7600 CORPORATE CENTER DRIVE, SUITE 500
MIAMI, FLORIDA 33126
PHONE: (786) 464-1000 FAX: (786) 845-7119
CERTIFICATE OF AUTHORIZATION NO. 1838

Approved	Date	Approved	Date

CORROSION CONTROL

TEST STATION DETAILS

Scale	Drawing	Sheet
NTS	CC-104	367