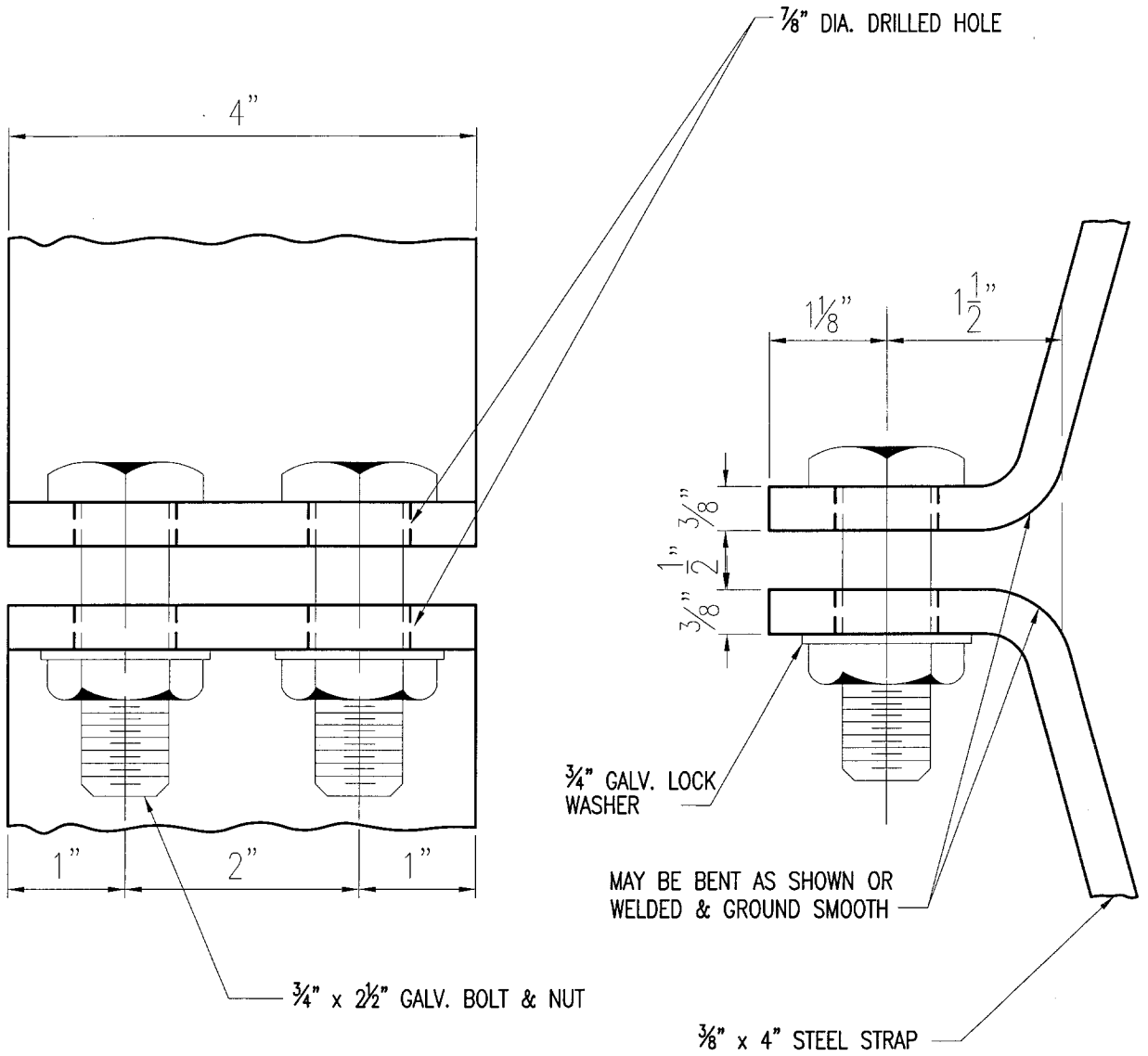

XXXXX		
ITEM	CROSS REF.	SPEC. REF.

MIAMI-DADE COUNTY
Delivering Excellence Every Day

ISSUE DATE	APPROVED BY
11/01/2006	V. E. F.

STANDARD DETAIL

PIPE GUARD
BOLT DETAIL

GS
1.4
SHEET 2 OF 2