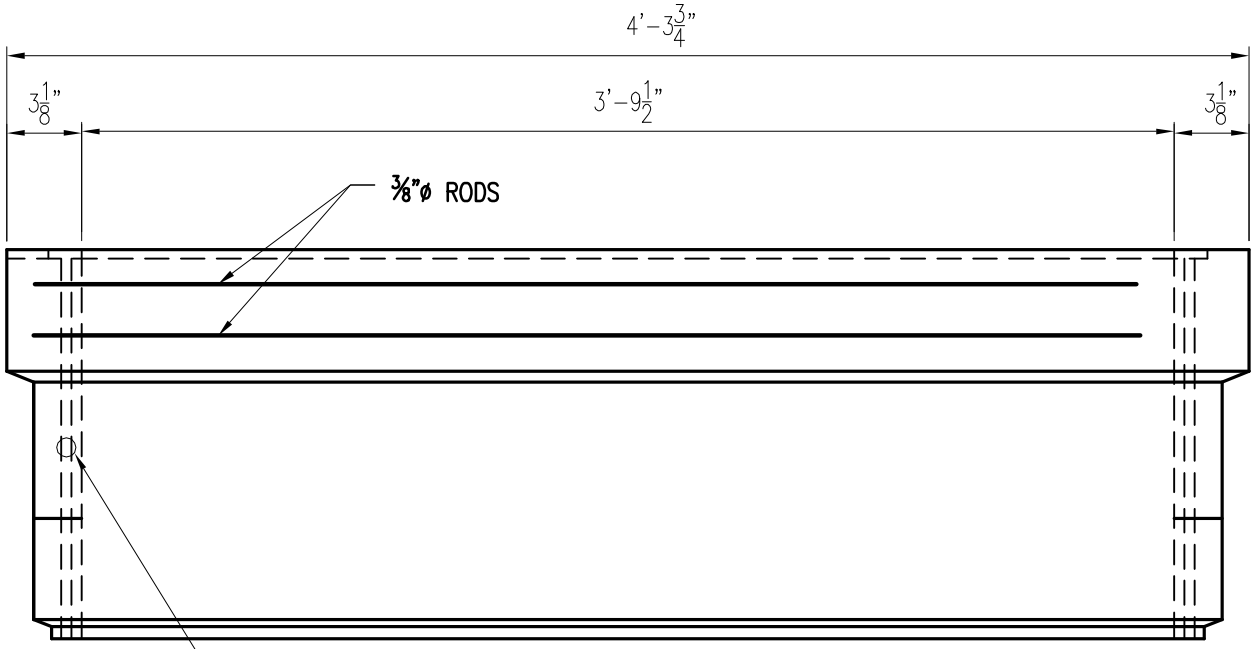

ELEVATION

SCALE: 1- 1/2 "=1'-0"

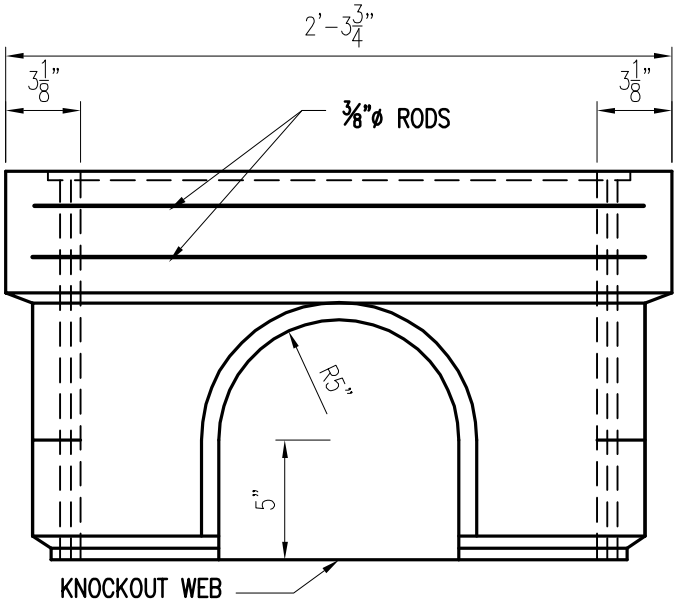

SIDE VIEW

SCALE: 1- 1/2 "=1'-0"

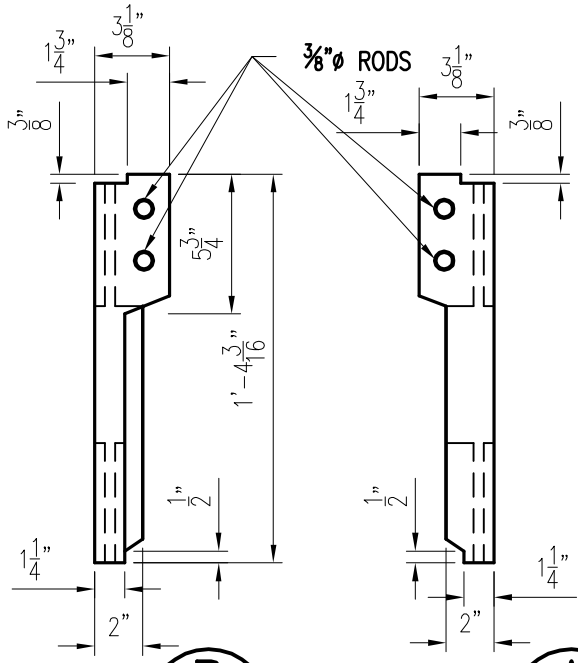

SECTION B/1 SECTION A/1

(ON SHEET 1)

SCALE: 1- 1/2 "=1'-0"

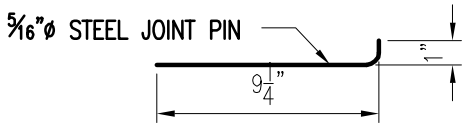

STEEL JOINT PIN DETAIL

XXXXX		
ITEM	CROSS REF.	SPEC. REF.

MIAMI-DADE COUNTY
Delivering Excellence Every Day

ISSUE DATE	APPROVED BY
11/01/2006	V. E. F.

STANDARD DETAIL

ASSEMBLED 2'x4' VAULT
(PRECAST SECTIONS)

WS
2.17
SHEET 2 OF 5