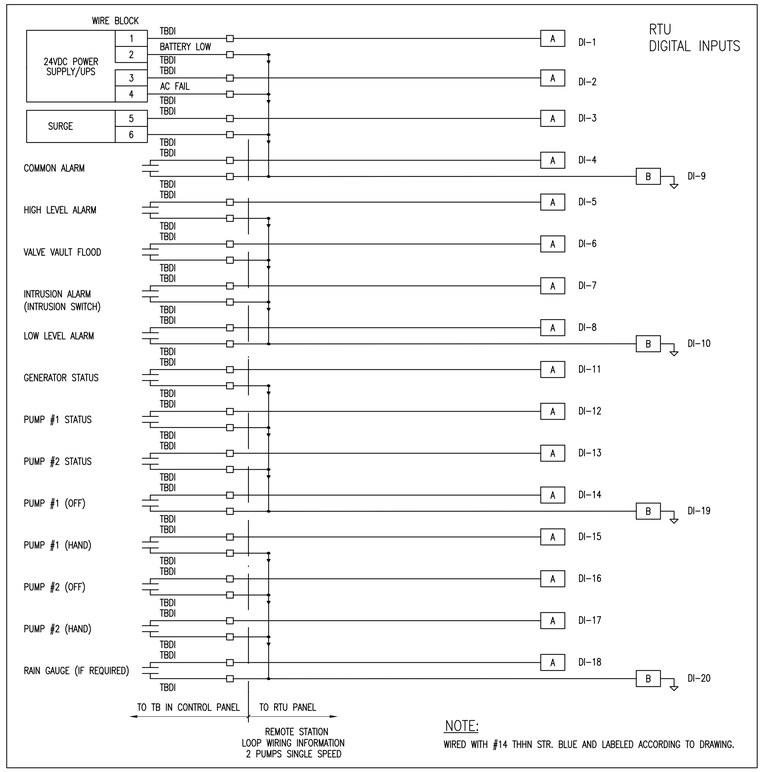

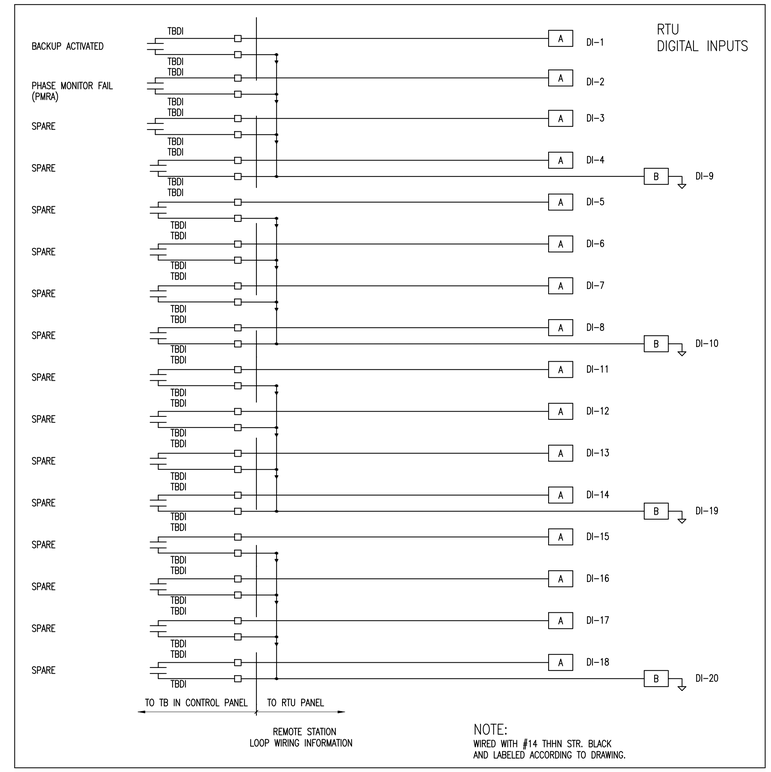

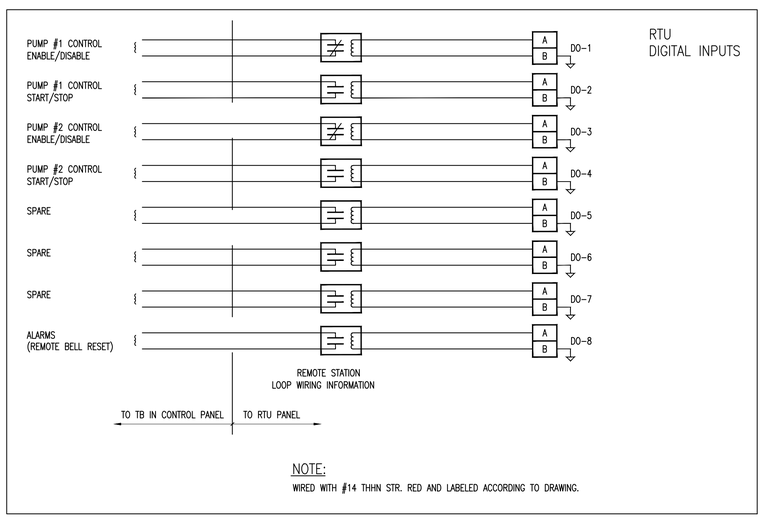

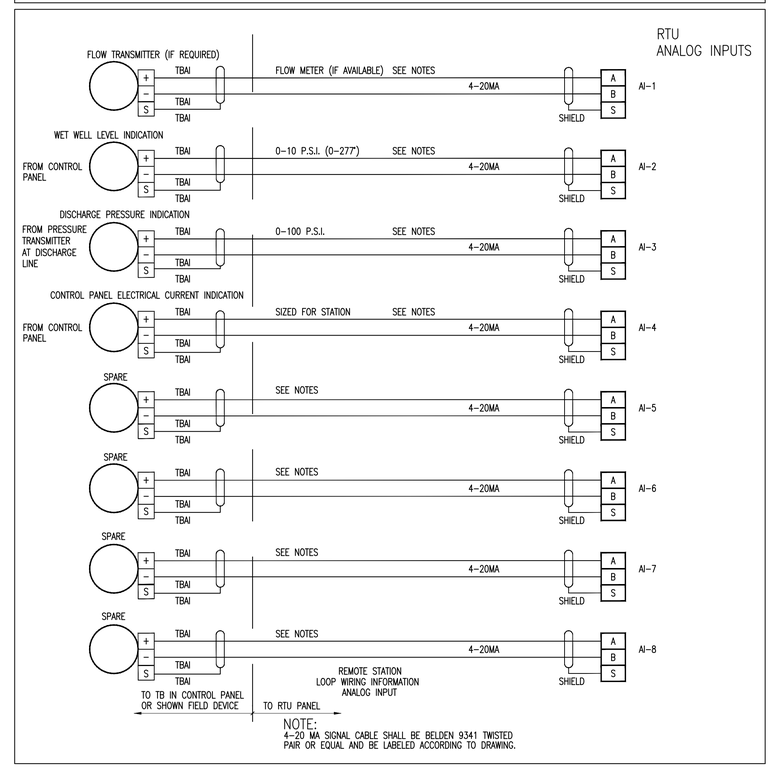

MIAMI-DADE COUNTY
Delivering Excellence Every Day

WATER & SEWER DEPARTMENT
3071 SW 38TH AVENUE
MIAMI, FL 33146-1520
305-665-7471
www.miamidade.gov/water

ENGINEERING & DESIGN DIVISION
3575 S LE JEUNE RD
MIAMI, FL 33146
786-268-5250

PCTS 00000/CONTRACT X-000 or RPQ/ERX00000
SUBMERSIBLE PUMPING STATION WITHOUT GENERATOR
PUMPING STATION No. 0000 (UPDATE 2015)
PROJECT OFFICIAL ADDRESS

R.T.U. INSTALLATION WIRING DIAGRAMS

DRAWING HISTORY

	RELEASED FOR	DATE	BY
X	REVIEW 90%	04/21/15	LMS
	REVIEW 00%		
	PERMIT		
	BID		
	AS-BUILT		

REVISIONS

No.	DESCRIPTION	DATE	BY
1	XXXXXX XXXXXX	04/21/15	LMS

APPROVALS

PROJECT MGR: X.X.X.	CHECKED: X.X.X.
DESIGNED: X.X.X.	DRAWN: X.X.X.
CHIEF ENGINEER: J.B.F.	
DESIGN MNGR.: R.J.A.	
SECTION HEAD: X.X.X.	

Xxxx Xxxxx, P.E.
Xxxxx Engineer
State of Florida-License No.00000
Date:_____

FILE NAME: 00000E05.DWG

DATE: 04/21/2015 SCALE:

SHEET E-5

DWG. No. S-00000-D